TCEQ Docket No. _____

In The Texas Commission on Environmental Quality

Appeal of the Executive Director's Negative Use Determination
Issued to Freestone Power Generation, LLC
f/k/a Freestone Power Generation, LP
for the Freestone Energy Center
Application No. 07-11966

NOTICE OF APPEAL

LOCKE LORD LLP

Elizabeth E. Mack
State Bar No. 12761050
Geoffrey R. Polma
State Bar No. 16105280
2200 Ross Ave., Suite 2200
Dallas, Texas 75201
Telephone: (214) 740-8598
Facsimile: (214)-756-8598
emack@lockelord.com

Counsel for Freestone Power Generation, LLC

TEXAS COMMISSION ON ENVIRONMENTAL QUALITY
2012 AUG -1 PM 12: 31
CHIEF CLERKS OFFICE

I. INTRODUCTION

Pursuant to 34 Texas Administrative Code Section 17.25, Freestone Power Generation, LLC[1] ("**Appellant**"), 717 Texas Ave., Suite 1000, Houston, TX, 77002, hereby files an appeal and requests that the Texas Commission on Environmental Quality (the "**TCEQ**") reverse the negative use determination (the "**100% Negative Use Determination**") issued by the Executive Director of the TCEQ by letter of July 10, 2012 to Appellant in connection with determination application number 07-11966. The Negative Use Determination is attached as Exhibit 2. This appeal is timely filed within 20 days of Appellant's receipt of the 100% Negative Use Determination.

The central issue in this case is whether the TCEQ can summarily change its mind by issuing a 100% Negative Use Determination for Heat Recovery Steam Generators ("**HRSGs**"), a piece of equipment that reduces emissions by eliminating the need for combustion of hydrocarbon-based fuels. In addition to lacking factual support, the TCEQ's unexplained about-face from a 100% positive use determination to a 100% negative use determination is intolerable based on the most fundamental premise: it violates the Equal and Uniform Clause of the Texas Constitution, the primary guarantee to the citizens of Texas of fair and constitutional taxation. And, if the constitutional inadequacy is not enough, the 100% Negative Use Determination ignores the mandate of the citizens of the State of Texas, who approved a constitutional amendment authorizing exemption for pollution control equipment. Further, the 100% Negative Use Determination flouts the intent of the Texas Legislature, which specifically identified HRSGs as a type of equipment qualifying for exemption -- and which authorized the TCEQ to deny a HRSG exemption only with "compelling evidence" of no pollution control benefit. The State of Texas has repeatedly agreed that HRSGs are pollution control equipment, both through prior TCEQ action, and notably, in AG Opinion JC-0372, which specifically concluded that the pollution control exemption extends to "pollution-reducing production equipment."

[1] Freestone Power Generation, LP was converted to a limited liability company on February 22, 2011. *See* Exhibit 1 (entity conversion documentation).

II. APPENDIX

Citations to "Exhibit Numbers" herein refer to the exhibit numbers assigned to documents contained in a separate, concurrently filed Appendix accompanying this Notice of Appeal.

III. BASES FOR APPEAL

A. Description of Facility and Equipment

The Freestone Energy Center is a nominally 1038 MW plant that is located in Fairfield, Texas. The facility consists of four combustion turbine generators ("**CTGs**"), four HRSGs, and two steam turbine generators ("**STGs**"). The equipment is configured into two largely independent power blocks, each consisting of 2 CTGs, 2 HRSGs, and 1 STG (thus, two 2x2-1 configurations). Each CTG exhausts into its own HRSG, which utilizes the exhaust heat to generate steam for use in the STG. The HRSGs found at the Freestone Energy Center are therefore, in simple terms, heat exchangers that recover heat from a hot gas stream for reuse versus release into the atmosphere. Use of the otherwise wasted heat in the turbine exhaust gas results in higher plant thermal efficiency, less fuel use, and consequently less emissions compared to other power generation technologies employed in Texas.

B. Chronology of Facts and Events

(1) On March 25, 2008, Appellant by and through its representative Duff & Phelps filed with the TCEQ Application for Use Determination Number 07-11966 (the "**Application**"), attached as Exhibit 3, requesting a positive use determination for the HRSGs and steam turbines used at its Facility.

(2) On May 1, 2008, the TCEQ issued to Appellant a final determination (the "**100% Positive Use Determination**"), attached as Exhibit 4, which granted a 100% positive use finding for the HRSGs and denied any positive use for the steam turbines. TCEQ processed the 100% Positive Use Determination as a "Tier IV application" pursuant to the administrative rules then in effect under Chapter 17 of title 30 of the Texas Administrative Code.

(3) On May 14, 2008, the Freestone Central Appraisal District timely filed with the TCEQ an appeal of the 100% Positive Use Determination, attached (with exhibits omitted) as Exhibit 5, requesting that the Commission reconsider the 100% Positive Use Determination's conclusion that the HRSGs qualified for a 100% positive use finding. The appeal asserted that the HRSGs did not qualify for any positive use determination because the HRSGs "are production equipment and not pollution equipment."

(4) On December 3, 2008, the TCEQ Executive Director filed a response brief (the "**Response Brief**"), attached (with exhibits omitted) as Exhibit 6, for six Appraisal District appeals of TCEQ 100% positive use determinations for HRSGs, including an appeal of the 100% Positive Use Determination. The six appeals had been had been consolidated into a single appeal (the "**Consolidated Appeal**"). The Consolidated Appeal included, in addition to the 100% Positive Use Determination, the following TCEQ Docket Numbers: 2008-0830-MIS-U (UD 07-11914/Tenaska Gateway Partners, Ltd - Rusk County); 2008-0832-MIS-U (UD 07-11971/Borger Energy Associates, L.P. - Hutchinson County); 2008-0849-MIS-U (UD 07-11969/Brazos Valley Energy, L.P. - Fort Bend County); 2008-0850-MIS-U (UD 07-11994/Freeport Energy Center, L.P. - Brazoria County); and 2008-0851-MIS-U (UD 07-11926/Navasota Wharton Energy Partners, L.P. - Wharton County). The Response Brief requested that the Commission remand the determinations for the Executive Director to issue a new use determination applying a uniform 61% positive use determination for HRSGs.

(5) On February 13, 2009, the General Counsel of TCEQ sent notice to interested parties, attached as Exhibit 7, that the Consolidated Appeal would be heard at the February 25, 2009 public meeting of the TCEQ. On February 23, 2009, the General Counsel sent further notice, attached as Exhibit 8, that the TCEQ Executive Director had filed an unopposed motion for a continuance "to allow the ED more time to evaluate its current recommendation," and that the TCEQ Office of General Counsel had granted an "indefinite" continuance "pursuant to 30 TAC section 10.4" and "will notify the parties by subsequent letter of the future agenda and any associated filing deadlines."

(6) On June 18, 2012, the Executive Director filed a submission, attached as Exhibit 9, in which "[p]ursuant to 30 TAC section 17.25(d), the Executive Director of the TCEQ requests that the General Council remand the [six] applications for further processing."

(7) On July 10, 2012, TCEQ issued individually to each of the applicants in the Consolidated Appeal a Notice of Negative Use Determination with regard to HRSGs, including the 100% Negative Use Determination issued to Applicant that is the subject of this appeal. The negative determinations were characterized as the completion of the review of each applicant's original application following the June 2012 remands of such applications. The sole stated rationale for the 100% Negative Use Determination was that "[h]eat recovery steam generators are used solely for production and, therefore, are not eligible for a positive use determination." The TCEQ provided no technical review or analysis to the Appellant or any other applicant in the Consolidated Appeal supporting the negative use determinations.

C. Substantive and Procedural Bases for Appeal

(i) The Texas Constitution Requires a 100% Positive Use Determination So That All Similarly Situation HRSGs are Treated the Same.

(a) The Texas Constitution Mandates Equality and Uniformity

The Executive Director's 100% Negative Use Determination is unconstitutional because it violates Article VIII, Section 1(a) of the Texas Constitution, which requires that "taxation shall be equal and uniform." In its about-face decision, which changed, without notice, a 100% positive use determination to the 100% Negative Use Determination, the Executive Director ignored the Texas Constitution and the twenty virtually identical HRSGs for which TCEQ issued 100% Positive Use Determinations that have become final and have created tax exemptions. This, the Executive Director cannot do.

Equality and uniformity are the cornerstones of Texas taxation, particularly property taxation. A taxing scheme must be both equal and uniform to survive constitutional scrutiny. *Id.* It has long

been held that the "standard of uniformity" required by the Equal and Uniform Taxation Clause is the taxable value of property, a standard that necessarily includes whether an exemption is applied to the property. *Lively v. Mo., K&T Ry. Co. of Tex.*, 120 S.W. 852, 856 (Tex. 1909)("[t]he standard of uniformity prescribed by the Constitution being the value of the property, taxation cannot be in the same proportion to the value of the property unless the value of all property is ascertained by the same standard"); *see also Enron Corp. v. Spring Indep. School Dist.*, 922 S.W.2d 931, 935 (Tex. 1996)(in discussing statutory taxation distinctions among classes of property, stating "the Legislature could not constitutionally classify inventory separately from other property for at least some purposes. For example, inventory cannot be taxed at a rate different from other property, nor could it be exempted from taxation altogether.").

These constitutional principles of equality and uniformity apply to the TCEQ in its use determinations. Historically, the courts have most frequently applied the Equal and Uniform Taxation Clause to evaluate the constitutionality of tax statutes, tax regulations, and the administration of taxes by tax agencies such as local tax appraisal districts or the Comptroller of Public Accounts. Here, although the TCEQ's primary mission is to administer the environmental laws the State of Texas, the sole reason the TCEQ performs use determinations for pollution-control property is to determine whether such property qualifies for exemption from property tax under Texas Tax Code section 11.31. Because the TCEQ is performing a tax administration function in issuing use determinations, in doing so it is subject to the Texas Constitution's requirement that its decisions and processes result in equal and uniform taxation. The Tax Code itself recognizes that the TCEQ is subject to these constitutional constraints, requiring that the TCEQ's administrative rules regarding pollution-control equipment determinations "must . . . be sufficiently specific to ensure that determinations are equal and uniform." TEX. TAX CODE §11.31(g).

Texas courts have made clear that the Equal and Uniform Taxation Clause requires that similarly situated taxpayers must be taxed in the same fashion. *Bullock v. Sage Energy Co.*, 728 S.W.2d 465, 468 (Tex. App.—Austin 1987, writ ref'd n.r.e.)(invalidating administrative rule that did not result in equal and uniform imposition of the franchise tax upon similarly situated taxpayers). Moreover, the tax treatment of a group of taxpayers or properties is considered to be both equal

and uniform only "when the tax classification is not unreasonable or arbitrary and operates equally within the class." *Tarrant Appraisal Dist. v. Colonial Country Club*, 767 S.W.2d 230, 234 (Tex.App.—Fort Worth 1989, writ denied); *see also* Op. Tex. Att'y Gen. No. GA-0653 (2008)(addressing the equal and uniform nature of local sales and use tax rates); *TGS-NOPEC Geophysical Co. v. Combs*, 268 S.W.3d 637, 646 (Tex. App.—Austin 2008), *rev'd on other grounds*, 340 S.W.3d 432 (Tex. 2011)("[t]he requirements for equal protection under the United States Constitution and equal and uniform taxation under the Texas Constitution are substantially the same").

Equality and uniformity are particularly applicable in property tax cases. For example, in *Lively*, the seminal case in the property tax arena, a taxpayer challenged the constitutionality of Dallas County's valuation of intangible property, which was valued significantly higher than other types of property in the district. The Texas Supreme Court struck down Dallas County's arbitrary valuation because the valuation was not made according to the same rule or standard of value.

This requirement of uniform treatment carries over to the administration of property tax exemptions. The Texas Constitution authorizes, and the Texas Legislature has enacted, certain enumerated exemptions from taxation, including the pollution control exemption. For taxation to be "uniform and equal" as required by the Texas Constitution, exemptions must be applied in a consistent manner. Under these principles, TCEQ's decision to overturn a 100% positive use determination for the Appellant's HRSGs violates the Texas Constitution's equal and uniform taxation guarantee, because multiple other HRSGs that are factually and legally indistinguishable from Appellant's HRSGs have been granted positive use determinations and have been exempted from property taxation.

(b) Twenty HRSGs Will Have 100% Positive Use Determinations but Appellant Will Have a Negative Use Determination in Violation of the Texas Constitution

The TCEQ's own record and statements establish its unconstitutional course of conduct. The TCEQ Executive Director issued a negative use determination for Appellant's HRSGs, which will have the direct effect of imposing property taxes on, by denying exemption for, the HRSGs. However, the TCEQ Executive Director's Response Brief in the Consolidated Appeal admitted in

the following passage that other, indistinguishable property owners have received the benefit of positive use determinations and exemptions from tax:

> [T]he Executive Director has received approximately thirty seven Tier IV use determination applications for HRSGs and steam turbines installed at combined cycle electric generation facilities. The Executive Director has issued 100% positive use determinations for twenty six HRSGs. Six out of the twenty six use determinations were appealed by the affected appraisal districts, and all six are the subject of the instant appeals. There are currently eleven applications awaiting determinations.

Therefore, the TCEQ concedes that it has issued twenty 100% positive use determinations for HRSGs that have become final, leading to tax exemptions for these HRSGs. *See* Exhibit 10 (Appraisal District records substantiating that the facilities which Appellant understands received the nonappealed HRSG positive use determinations have been granted property tax pollution control exemptions).

The twenty HRSGs for which TCEQ issued use determinations that created exemptions include HRSGs that are used in the same fashion at the same type of facilities as Appellant's HRSGs. Notably, the TCEQ processed the use determination applications for the twenty HRSGs under the same standard that must be applied to Appellant's HRSG, i.e., as "Tier IV" applications under the TCEQ's pollution control exemption administrative rules as amended effective January 16, 2008 to implement H.B. 3732. The TCEQ acted well within its authority to issue these 100% positive use determinations and was acting well within its reasonable administrative powers to do so.

As a result, the TCEQ by administrative action has already granted a property tax exemption to a class of property owners and property that is factually indistinguishable from Appellant, and the TCEQ has done so pursuant to the legal standard that must be applied to Appellant's HRSGs. Under the Texas Constitution's Equal and Uniform Taxation clause, the TCEQ is without power to now create, through a change in administrative policy, a second class of HRSG owners (including Appellant) that is treated wholly differently and denied exemption. Rather, the Texas Constitution guarantees to Appellant a treatment that is equal and uniform with TCEQ's established policy, which mandates reversal of the 100% Negative Use Determination and reinstatement of the 100% positive use determination.

(ii) The TCEQ's *Per Se* Disallowance of a Positive Use Determination for the HRSGs as "Production Equipment" Is Incorrect.

The TCEQ Executive Director issued the 100% Negative Use Determination based on the conclusion that "[h]eat recovery steam generators are used solely for production and, therefore, are not eligible for a positive use determination." This conclusion is contrary to the intent of the Texas Legislature, incorrect as a matter of law, and, quite simply, bad public policy.

As explained below, the Texas Legislature has demonstrably made a policy decision that HRSGs are a favored class of pollution control equipment that can qualify for exemption. By its current action, the TCEQ is overstepping its role as an administrative agency and superseding the will of the Legislature. If the TCEQ or other interested parties disagree with the status of HRSGs as equipment qualifying for exemption, the appropriate forum for airing objections is with the elected representatives of the people of Texas, and not via bureaucratic fiat.

(a) Background and Policy Considerations.

HRSGs control pollution by avoiding emissions; other devices control pollution by removing emissions. Both types of devices are valid means of achieving pollution control and consequently entitled to exemption, yet the TCEQ's current stance treats them completely differently.

Fossil fuel fired power generation facilities are contributors to U.S. emissions of nitrogen oxides ("NO_X"), sulfur dioxide, and other contaminants. Fossil fuel-fired simple cycle generators, which are still being built today, lose large amounts of potential energy in the form of waste heat released into the atmosphere. These type of facilities control emissions for a given level of power output by incorporating equipment that directly removes or captures pollutant discharges. There is, however, a different route to the same pollution control result: combined cycle technology, and specifically the use of HRSGs. HRSGs capture the waste heat created by a fossil fuel-fired generator, and use it to power a steam turbine that generates additional electricity. The result of this process is that HRSGs increase the electricity output per unit of fuel input, such that less fuel is burned and less pollutants are produced in operating the plant.

For a given level of electricity output, a facility therefore has a choice. It can adopt simple cycle technology, and achieve pollution control with equipment that affirmatively removes pollutants. Alternatively, it can adopt combined-cycle technology with HRSGs, and thereby use less fuel and create less emissions to achieve the same level of electricity output. In either case, the mechanism for controlling pollutants – affirmative removal of pollutants versus avoidance of emissions – arrives at the same place, i.e., pollution control.

Retreating from its long held view that HRSGs should receive positive use determinations for the pollution control equipment they are, the TCEQ has now decided to draw a false distinction favoring one type of equipment over the other in its administration of the pollution control exemption by concluding that a HRSG's presence in a production process disqualifies it from a finding of positive use. As a matter of sound public policy and fairness, the tax consequences as between these two pollution control mechanisms should be neutral, i.e., the equipment necessary for either approach should be exempt.

(b) Clear Statutory Guidance.

The Texas Legislature by statute has already come to the same conclusion. In 2007, the Legislature amended section 11.31 of the Tax Code to include a new subsection (k), stating that "[t]he Texas Commission on Environmental Quality shall adopt rules establishing a nonexclusive list of facilities, devices, or methods for the control of air, water, or land pollution, which must include . . . heat recovery steam generators . . ."

By their nature, HRSGs are designed to capture waste heat and convert it into a product such as steam or electricity, i.e., HRSGs are inevitably part of a production process rather than serving directly to remove pollutants created in a production process. Moreover, HRSGs' most important and common application is as a power plant component. The Legislature knew this when it included HRSGs on the statutory list of equipment that "must" be treated as qualifying for exemption. In short, (i) the Legislature has explicitly directed that HRSGs must be treated as equipment that can qualify for exemption, (ii) Appellant's HRSGs are a prototypical HRSG application, and (iii) therefore, Appellant's HRSGs are a type of equipment that qualifies for exemption. Yet, the TCEQ has now chosen to disregard this clear legislative directive. Instead, it

has substituted its judgment for that of the Legislature and *per se* denied the existence of any positive use or exemption based exclusively on a conclusory assertion that HRSGs are used solely for production. This it cannot do, and the 100% Negative Use Determination must be reversed.

(c) TCEQ Noncompliance with Statutory Procedures.

The TCEQ wrongfully disregarded the statutory processes under which it must administer use determinations and their resulting tax consequences, which mandates overturning the decision. Evidently, the TCEQ has decided for whatever reason to eliminate HRSGs' status as exempt items by issuing these negative use determinations broadly characterizing HRSGs as "solely" production equipment. As briefed above, Appellant strongly disagrees with this conclusion. Regardless, however, the TCEQ cannot arbitrarily ignore the will of the Texas Legislature to achieve this result. If the TCEQ was interested in revising how HRSGs are treated, it had to follow the process provided by the Texas Legislature. TCEQ did not do so.

Section 11.31(l) of the Tax Code provides a very specific process for the TCEQ to follow when it wants to update the list of equipment receiving tax benefits:

> (l) The Texas Commission on Environmental Quality by rule shall update the list adopted under Subsection (k) at least once every three years. An item may be removed from the list if the commission finds compelling evidence to support the conclusion that the item does not provide pollution control benefits.

By issuing negative determinations to Appellant and the other property owners in the Consolidated Appeals based on the rationale that HRSGs as production equipment are ineligible for positive use, the TCEQ adopted a policy that *de facto* precludes HRSGs from exemption, since HRSGs by their nature are used in production processes rather than directly removing pollutants. However, by statute, the sole permissible process for TCEQ to achieve that result is (i) to remove the equipment from the Expedited Review List as part of its periodic update process and (ii) to do so based on *compelling evidence* of *no* pollution control benefit.

This process is not merely academic. It involves fundamental fairness associated with the most basic premise: due process. Indeed, the Legislature wanted to ensure that TCEQ decisions were reasoned, public, and with notice.

The TCEQ probably decided to avoid this route because the "compelling evidence" standard provides a very significant obstacle. The Legislature's initial inclusion of HRSGs on the list established a legislative choice and intent that pollution savings achieved through production equipment qualifies for exemption. Consequently, the mere fact that HRSGs are integrated into a production process—the fact on which the TCEQ relied for the 100% Negative Use Determination—falls far short of the "compelling" evidence of no pollution control benefit necessary to *per se* deny positive use.

In summary, the Legislature intentionally created a high threshold that the TCEQ must cross before it is authorized to supersede the Legislature's decision to include HRSGs on the list of exempt equipment, and the TCEQ is now trying to sidestep this threshold through the use determination process. The TCEQ is without authority to take this action.

(d) Arbitrary and Capricious Agency Action.

The 100% Negative Use Determination must be overturned because it failed to afford due process. The TCEQ previously recognized and explained clearly why and how HRSGs qualify as pollution control equipment via avoided emissions. In the Response Brief filed in the Consolidated Appeals, the TCEQ Executive Director, with full knowledge of the relevant facts, made the case for the exemption of HRSGs:

> A HRSG acts as a fuel substitute in a typical combined-cycle installation. A typical HRSG captures hot exhaust gases from a combustion turbine. The resulting heat is converted "into high pressure and temperature steam" which is used to propel a steam turbine to generate electrical energy. This process eliminates the need for the additional burning of coal or other hydrocarbon based fuel in order to obtain the same increase in electrical energy generation output at the site. Installation of a HRSG in a combined-cycle facility "allows more electrical energy to be produced for a given heat input" compared to a "simple cycle or traditional steam boiler/turbine (Rankine cycle) configuration."

These facts led to conclusions that:

> A comparable combined cycle power plant produces less air emissions than the same size simple cycle power plant. The reduced emissions are attributed to reduced combustion. The installation of the HRSGs lead to the reduced emissions.

. . . The pollution control aspect of the combined cycle plant relates solely to the installation of the HRSGs.

Now, however, the TCEQ has completely reversed course and discarded this reasoning and policy, all without adequate explanation or justification, an approach that violates the prohibition on arbitrary and capricious agency decision making. *See City of Waco v. TCEQ*, 346 S.W.3d 781, 818-19 (Tex. App.—Austin 2011, pet. denied).

(e) Attorney General Guidance.

Finally, the TCEQ's position that HRSGs as production equipment are *per se* ineligible for a positive use determination disregards the guidance of the Texas Attorney General on this question of law. Texas Attorney General Opinion Number JC-0372 (2001) considered the issue of "whether section 11.31 excludes from its scope pollution-reducing production equipment." The Attorney General observed that the "statute clearly embraces not only 'facilities' and 'devices' but also 'methods' that prevent, monitor, control, or reduce pollution. 'Methods' is an extremely broad term that clearly embraces means of production designed, at least in part, to reduce pollution." As a result the Attorney General held that the exemption extends to "equipment . . . that is used to make a product and by its design limits pollution." This Attorney General Opinion was issued prior to the 2007 legislative change that created the list of equipment in section 11.31(k) of the Tax Code, including HRSGs, that qualify for exemption. By including HRSGs as a specific class of equipment in the statutory list of exempt equipment, the Texas Legislature is in full accord with the Attorney General's view that the pollution control exemption encompasses production equipment which by its design reduces pollution, including HRSGs in particular.

(iii) State and Federal Environmental Law Support the Conclusion that HRSGs Are Pollution Control Equipment Even if Used as Part of a Production Process.

Even if the Commissioners should conclude that the HRSGs are part of a production process, such a conclusion does not mandate that this equipment be ineligible for the exemption provided by Section 11.31 of the Tax Code. The Tax Code exemption applies to any "structure, building, installation, excavation, machinery, equipment, or device, and any attachment or addition to . . . that property, that is used, constructed, acquired, or installed ***wholly or partly*** to meet or exceed

rules or regulations. . . for the prevention, monitoring, control, or reduction of air, water, or land pollution." Id. §11.31(b)(emphasis supplied). In other words, the exemption applies to any piece of equipment that reduces air pollution in order to meet an applicable rule or regulation.

Both state and federal law impose restrictions on the amount of pollutants that can be emitted by electric generating facilities. Under the Texas Clean Air Act, a facility that emits pollutants must obtain a permit from the TCEQ. TEX. HEALTH & SAFETY CODE §382.0518(a). In addition to the requirement to obtain a permit, TCEQ's and EPA's regulations impose a number of emission limiting restrictions. Two such restrictions include the application of "best available control technology" (commonly referred to as "BACT") and "new source performance standards" ("NSPS").

All facilities required to obtain an air permit must, at a minimum, utilize BACT to reduce pollutants from the facility to a level that is technically practicable and economically reasonable. *Id.* §382.0518(b)(1); *see also* 40 C.F.R. §52.21(b)(12). TCEQ and EPA rules implementing BACT provide that the reduction in total emissions can be achieved through the use of either (i) add-on pollution control equipment, or (ii) *production processes*, systems, methods, or work practices. *See* 30 TAC §116.10(1); 40 C.F.R. §52.21(b)(12). Here, the HRSGs assist the "production process" to improve fuel efficiency when generating electricity and, as a result, reduce the amount of pollutants generated due to less fuel being burned. Therefore, it is the HRSGs' very presence in the production process that reduces the amount of pollutants emitted by the facility, which is in accordance with TCEQ and EPA BACT requirements. The TCEQ and EPA regulations' explicit position that "production processes" are part of BACT directly contradicts the TCEQ's current view that the HRSGs' status as solely production equipment precludes positive use. As a result, the HRSGs qualify as pollution control equipment under the Tax Code, and the 100% Negative Use Determination should be reversed and the 100% Positive Use Determination should be reinstated.[2]

---

[2] Similarly, all electric generating facilities must meet all applicable NSPS developed by EPA. 30 TAC §116.111(a)(2)(D) (incorporating by reference the EPA's NSPS set forth in 40 C.F.R. pt. 60). NSPS that are applicable to HRSGs include 40 C.F.R. pt. 60, subpts. Da, Db, and KKKK. With respect to emissions of NOx, these subparts restrict the rate of NOx that can be emitted into the atmosphere based upon plant efficiency and the amount of fuel burned. *See, e.g.*, 40 C.F.R. §§ 60.44Da, 60.44b, and 60.4320 (the

(iv) The TCEQ Must Apply the Pre-2010 "Tier IV" Criteria to the HRSGs.

The preceding analysis establishes that the TCEQ's attempt to *per se* disallow positive use for the HRSGs is impermissible. It is equally clear that the HRSGs' percentage of exempt use must be determined under the Tier IV criteria rather than under the Tier III criteria. Specifically, because the determination application currently at issue was filed in 2008, the TCEQ's use determination must be made pursuant to the "Tier IV" administrative rule standards in effect in 2008 rather than pursuant to the formulas added to the administrative rule in 2010. Retroactive application of the formulas added to the TCEQ rules in 2010 both violates the constitutional prohibition on retroactive laws and contravenes the express language of the legislation pursuant to which the amended rules were adopted.

In 2010, the TCEQ amended its rules to eliminate the Tier IV application, which was the type of application under which the TCEQ originally granted a 100% positive use determination to Appellant's HRSGs in the 100% Positive Use Determination. In the preamble to the amended rules published in the *Texas Register*, the TCEQ explained that the change was intended to implement the uniformity requirements in HB 3206 and HB 3544 by applying new formulas to all partial use determinations and by eliminating the Tier IV process. Thus, the rule change at issue—changing from the Tier IV standards to the Tier III standards—was recognized as the TCEQ's implementation of HB 3206 and HB 3544, which explicitly do not apply to use determination applications (such as Appellant's) filed before January 1, 2009. *See* 35 Tex. Reg. 10965 (Dec. 10, 2010).

The Bill of Rights to the Texas Constitution provides:

> No bill of attainder, ex post facto law, retroactive law, or any law impairing the obligation of contracts, shall be made.

TEX. CONST. art. I, § 16. Texas courts have long interpreted this provision as prohibiting

---

amount of fuel burned is expressed as "heat input"). When a facility chooses to include a HRSG as part of the production process, the amount of fuel burned is reduced, which corresponds to a resulting reduction in the amount of total NOx emitted from the facility. This increased fuel efficiency meets or exceeds the applicable NSPS. These standards for evaluating pollution control via increased efficiency and avoided emissions reinforces the conclusion that the HRSGs qualify for the exemption under the Tax Code.

retroactive laws in the civil law context, in addition to prohibiting ex post facto laws in the criminal law context. *See, e.g.*, *Union Carbide Corp. v. Synatzske*, No. 01–09–01141–CV, 2012 WL 2452044, *17 (Tex. App.—Houston [1 dist.] June 28, 2012, no pet. h.) (not yet released for publication). Further, "[t]he same general principles [regarding retroactivity of statutes] also apply to agency rules." Tex. Att'y Gen. Op. No. GA-0655 (2008) (citing *R.R. Comm'n v. Lone Star Gas Co.*, 656 S.W.2d 421, 425 (Tex. 1983)).

The constitutional prohibition on retroactivity serves two important objectives:

> (1) it protects "settled expectations," which "should not be lightly disrupted," i.e., "the rules should not change after the game has been played," and (2) it protects against "abuses of legislative power," which "offer[s] special opportunities for the powerful to obtain special and improper legislative benefits."

Union Carbide Corp., 2012 WL 2452044 at *17 (quoting *Robinson v. Crown Cork & Seal Co.*, 335 S.W.3d 126, 139 (Tex. 2010)). While a retroactive law may withstand constitutional scrutiny when the balance of the factors laid out by the Supreme Court favors retroactive application, "[t]here must be a compelling public interest to overcome the heavy presumption against retroactive laws." *Id.* at *18; *see also Robinson*, 335 S.W.3d at 145 (holding that courts must consider "the nature and strength of the public interest served by the statute as evidenced by the Legislature's factual findings; the nature of the prior right impaired by the statute; and the extent of the impairment" in determining whether a statute violates the constitutional prohibition against retroactive laws). Here, the nature of the right at stake and the extent of the impairment are substantial, and there is no compelling public interest to support the retroactive application of the 2010 amendments to the TCEQ's rules. In fact, the public interest favors application of the 2008 rules for the reasons discussed above in sections III.C.(i)-(iii).

Moreover, even when retroactivity is not constitutionally prohibited, a statute or administrative rule is presumed to be prospective in its application absent express indication otherwise. *See Coastal Indus. Water Auth. v. Trinity Portland Cement Div.*, 563 S.W.2d 916, 918 (Tex. 1978) ("It is the law of this State, and the law generally, that, in the absence of any special indication or reason, a statute will not be applied retroactively, even when there is no constitutional impediment against it."). This rule is codified in the Code Construction Act. TEX. GOV'T CODE § 311.022 ("A

statute is presumed to be prospective in its operation unless expressly made retrospective.").

In this case, there is no indication that the 2010 amendments to the TCEQ's administrative rules were intended to apply retroactively to pre-2009 applications. Rather, H.B. 3206 and H.B. 3544—the legislation pursuant to which the 2010 formulas were adopted, as indicated in the *Texas Register* preamble to the amended rules—expressly provide that the changes in the law do not apply to applications filed before January 1, 2009.[3] The legislation therefore expressly indicates that the legislature did not intend for the new law and the rules implementing it to apply retroactively to applications filed before January 1, 2009.

Retroactive application of the formulas added to the TCEQ rules in 2010 violates the constitutional prohibition on retroactive laws and contravenes the express language of the legislation pursuant to which the amended rules were adopted. Therefore, in making use determinations with regard to Appellant's HRSGs, the TCEQ must apply the Tier IV rules that were in effect in 2008 when the applications were filed and that led to the issuance of the 100% Positive Use Determination.

(v) The HRSGs Qualify for Positive Use Determinations Under the Tier IV Criteria.

As explained above, (i) the TCEQ lacks the authority to *per se* disqualify HRSGs from positive use merely because HRSGs are integrated into a production process, and (ii) Appellant's HRSGs must be evaluated by the TCEQ under the Tier IV application process as it existed prior to 2010 amendments to the TCEQ pollution control equipment administrative rules.

Appellant's original Application as filed on March 25, 2008, attached as Exhibit 3, as supplemented by its December 5, 2008 Response to Appeal of the 100% Positive Use Determination, attached as Exhibit 11, explain and support in detail the basis on which the

[3] H.B. 3206, 81st Leg., Reg. Sess. (Tex. 2009) ("The change in the law made by this Act applies only to a determination under Section 11.31, Tax Code: (1) issued before the effective date of this Act that is not final as of the effective date of this Act or issued on or after the effective date of this Act; and (2) the application for which (A) was filed before the effective date of this Act but not before January 1, 2009; or (B) is filed on or after the effective date of this Act."); H.B. 3544, 81st Leg., Reg. Sess. (Tex. 2009) ("A determination that is not final on the effective date of this Act on an application that was filed before January 1, 2009, is governed by the law in effect before the effective date of this Act, and that law is continued in effect for that purpose.").

application of the Tier IV criteria to Applicant's HRSGs result in a 100% positive use determination. Appellant incorporates by reference and reiterates the position taken in those documents in support of the 100% Positive Use Determination for the HRSGs under the Tier IV criteria.

(vi) The Remand of the Consolidated Appeal Was Improper.

On June 18, 2012, the Executive Director filed a request that the General Counsel remand the applications in the Consolidated Appeal for further processing pursuant to 30 T.A.C. section 17.25(d). This remand—which led to the issuance of the 100% Negative Use Determination—was invalid and must be disregarded. The Commission must instead hear this case, if at all, by reverting to its pre-remand status of an appeal by the appraisal district of the 100% Positive Use Determination.

30 TAC section 17.25(d) states:

> The general counsel may remand a matter from the commission's agenda to the executive director if the executive director or the public interest counsel requests a remand.

The TCEQ first added this provision to the pollution control equipment administrative rules when it amended the rules in 2010. At the time Appellant filed its original application for a use determination for the HRSGs, and also at the time the TCEQ issued the 100% Positive Use Determination, this provision was not in the TCEQ rules and no other authority authorized the General Counsel to remand an application after a use determination had been issued and appealed to the Commission. The *Texas Register* Notice of Final Adoption of 30 TAC section 17.25(d) acknowledged that the remand provision created authority that did not exist previously, noting: "Adopted §17.25(d) is added to provide a mechanism for the general counsel to remand appeals back to the executive director without formal action by the commission when the action is requested by the executive director or the public interest counsel."

As discussed in section III.C(iv) above, an agency rule is presumed to apply prospectively unless expressly made retrospective. TEX. GOV'T CODE § 311.022. The TCEQ 2010 rule amendments provided for an "Effective date: December 13, 2010." Nothing in the 2010 rule amendments

expressly indicates that the new rules were intended to apply to a use determination application that had been filed and was in process at the time that the rule amendments took effect. In fact, as discussed in section III.C(iv), the legislation that led to the 2010 amendments to the TCEQ rules indicates just the opposite—that the Legislature expressly intended that previously-filed applications be subject to the law that existed at the time that those applications were made. In light of the presumption against retroactivity, the lack of any express indication that 30 TAC section 17.25(d) was intended to apply to use determinations made prior to enactment of that provision, and the clear intent of the legislature by setting forth an effective date, the General Counsel's remand of the use determination was invalid. Because the remand was invalid, the remand must be disregarded, with the consequences that (i) the 100% Positive Use Determination must be reinstated, (ii) the Executive Director's issuance of the 100% Negative Use Determination must be disregarded and rescinded, and (iii) the case must revert to its status as an appraisal district appeal to the Commission of the 100% Positive Use Determination.

(vii) Appellant's Steam Turbines Also Qualify for a Positive Use Determination.

The original Application included not only the HRSGs, but also the steam turbines used to produce additional electricity from combustion turbine generators' waste heat. The 100% Positive Use Determination assigned no positive use to the steam turbines, and Appellant's Response to Appeal of the 100% Positive Use Determination reasserted Appellant's right to a positive use determination for the steam turbines. *See* Exhibit 11. Although the 100% Negative Use Determination does not directly address the steam turbines, the 100% Negative Use Determination was issued in response to the Executive Director's June 18, 2012, remand of "the application," and therefore must be construed as denying positive use for all items in the Application, i.e., the HRSGs and the steam turbines. Appellant disagrees with the denial of positive use for the steam turbines and requests that the Commissioners consider a positive use determination for the steam turbines, for the reasons described in the original Application and because the steam turbines are equipment contained in the list of pollution control equipment in section 11.31(k) of the Tax Code.

IV. CONCLUSION

The TCEQ has violated Appellant's constitutional rights. By arbitrarily changing its HRSG policy to deny an exemption previously provided to multiple other indistinguishable HRSG owners, the TCEQ has unconstitutionally violated Appellant's fundamental right to equal and uniform taxation. Moreover, by constitutional amendment and by statute, the citizens of the State of Texas and the Texas Legislature made a clear choice: pollution control equipment in general, *and HRSGs in particular*, provide important public benefits and their use is encouraged by removing the burden of ad valorem taxation. By its current action, the TCEQ overstepped its function as an agency that administers the laws of Texas, and attempted with minimal justification to substitute its policy choices for the governing law. Likewise, by summarily determining that HRSGs are no longer qualified for exemption rather than following well established rules for making such a determination, the TCEQ has denied Appellant's due process. Therefore, as a matter of constitutional law, statutory law, and policy, the 100% Negative Use Determination cannot stand.

For the reasons discussed in this Notice of Appeal and pursuant to 30 Texas Administrative Code section 17.25(d)(2), Appellant (i) requests that the Commissioners rescind the remand of the Application and reinstate the appraisal district's appeal of the 100% Positive Use Determination; or (ii) in the alternative, that the Commissioners remand the 100% Negative Use Determination to the Executive Director for a new, positive use determination as mandated by the application of the Tier IV rules to Appellant's HRSGs.

Respectfully submitted,

LOCKE LORD LLP

ELIZABETH E. MACK
State Bar No. 12761050
GEOFFREY R. POLMA
State Bar No. 16105280
2200 Ross Ave., Suite 2200
Dallas, Texas 75201
emack@lockelord.com
(214) 740-8598
(214) 756-8598 (fax)

COUNSEL FOR FREESTONE POWER GENERATION, LLC

Dated: August 1, 2012

By: Elizabeth E. Mack
Elizabeth E. Mack

TCEQ Docket No. _____

In The Texas Commission on Environmental Quality

Appeal of the Executive Director's Negative Use Determination
Issued to Freestone Power Generation, LLC (f/k/a Freestone Power Generation, LP)
for the Freestone Energy Center
Application No. 07-11966

APPENDIX TO NOTICE OF APPEAL (AUGUST 1, 2012)

LOCKE LORD LLP

Elizabeth E. Mack
State Bar No. 12761050
Geoffrey R. Polma
State Bar No. 16105280
2200 Ross Ave., Suite 2200
Dallas, Texas 75201
Telephone: (214) 740-8598
Facsimile: (214)-756-8598
emack@lockelord.com

Counsel for Freestone Power Generation, LLC

TEXAS COMMISSION ON ENVIRONMENTAL QUALITY
2012 AUG -1 PM 12: 30
CHIEF CLERKS OFFICE

Corporations Section
P.O.Box 13697
Austin, Texas 78711-3697

Hope Andrade
Secretary of State

Office of the Secretary of State

CERTIFICATE OF CONVERSION

The undersigned, as Secretary of State of Texas, hereby certifies that a filing instrument for

FREESTONE POWER GENERATION LP
File Number: 12115310

Converting it to

Freestone Power Generation, LLC
File Number: [Entity not of Record; Filing Number Not Available]

has been received in this office and has been found to conform to law. ACCORDINGLY, the undersigned, as Secretary of State, and by virtue of the authority vested in the secretary by law, hereby issues this certificate evidencing the acceptance and filing of the conversion on the date shown below.

Dated: 02/23/2011

Effective: 02/23/2011

Hope Andrade
Secretary of State

Corporations Section
P.O.Box 13697
Austin, Texas 78711-3697

Hope Andrade
Secretary of State

Office of the Secretary of State

CERTIFICATE OF FILING
OF

Freestone Power Generation, LLC
File Number: 801388432

The undersigned, as Secretary of State of Texas, hereby certifies that an Application for Registration for the above named Foreign Limited Liability Company (LLC) to transact business in this State has been received in this office and has been found to conform to the applicable provisions of law.

ACCORDINGLY, the undersigned, as Secretary of State, and by virtue of the authority vested in the secretary by law, hereby issues this certificate evidencing the authority of the entity to transact business in this State from and after the effective date shown below for the purpose or purposes set forth in the application under the name of

Freestone Power Generation, LLC

The issuance of this certificate does not authorize the use of a name in this state in violation of the rights of another under the federal Trademark Act of 1946, the Texas trademark law, the Assumed Business or Professional Name Act, or the common law.

Dated: 02/23/2011

Effective: 02/23/2011

Hope Andrade
Secretary of State

Form 642
(Revised 12/08)

Return in duplicate to:
Secretary of State
P.O. Box 13697
Austin, TX 78711-3697
512 463-5555
FAX: 512 463-5709

Filing Fee: See instructions

Certificate of Conversion of a Limited Partnership Converting to a Limited Liability Company

This space reserved for office use

FILED
In the Office of the
Secretary of State of Texas

FEB 23 2011

Corporations Section

Converting Entity Information

The name of the converting limited partnership is:

Freestone Power Generation LP

The jurisdiction of formation of the limited partnership is: Texas

The date of formation of the limited partnership is: June 4, 1999

The file number, if any, issued to the limited partnership by the secretary of state is: 12115310

Converted Entity Information

The limited partnership named above is converting to a limited liability company. The name of the limited liability company is:

Freestone Power Generation, LLC

The limited liability company will be formed under the laws of: Delaware

Plan of Conversion

☐ The plan of conversion is attached.

If the plan of conversion is not attached, the following section must be completed.

Alternative Statements

In lieu of providing the plan of conversion, the converting limited partnership certifies that:

1. A signed plan of conversion is on file at the principal place of business of the limited partnership, the converting entity. The address of the principal place of business of the limited partnership is:

717 Texas Ave., Suite 1000	Houston	TX	USA	77002
Street or Mailing Address	*City*	*State*	*Country*	*Zip Code*

2. A signed plan of conversion will be on file after the conversion at the principal place of business of the limited liability company, the converted entity. The address of the principal place of business of the limited liability company is:

717 Texas Ave., Suite 1000	Houston	TX	USA	77002
Street or Mailing Address	*City*	*State*	*Country*	*Zip Code*

3. A copy of the plan of conversion will be furnished on written request without cost by the converting entity before the conversion or by the converted entity after the conversion to any owner or member of the converting or converted entity.

Certificate of Formation for the Converted Entity

If the converted entity is a Texas limited liability company, the certificate of formation of the Texas limited liability company must be attached to this certificate either as an attachment or exhibit to the plan of conversion, or as an attachment or exhibit to this certificate of conversion if the plan has not been attached to the certificate of conversion.

Approval of the Plan of Conversion

The plan of conversion has been approved as required by the laws of the jurisdiction of formation and the governing documents of the converting entity.

Effectiveness of Filing (Select either A, B, or C.)

A. ☑ This document becomes effective when the document is accepted and filed by the secretary of state.

B. ☐ This document becomes effective at a later date, which is not more than ninety (90) days from the date of signing. The delayed effective date is: _____

C. ☐ This document takes effect upon the occurrence of the future event or fact, other than the passage of time. The 90th day after the date of signing is: _____

The following event or fact will cause the document to take effect in the manner described below:

_____

_____

Tax Certificate

☐ ~~Attached hereto is a certificate from the comptroller of public accounts that certifies that the converting entity is in good standing for purposes of conversion.~~

☑ In lieu of providing the tax certificate, the limited liability company as the converted entity is liable for the payment of any franchise taxes.

Execution

The undersigned signs this document subject to the penalties imposed by law for the submission of a materially false or fraudulent instrument. The undersigned certifies that the statements contained herein are true and correct, and that the person signing is authorized under the provisions of the Business Organizations Code to execute the filing instrument.

Date: 2/15/11

Freestone Power Generation, L.P.

by Calpine Freestone, LLC, its general partner

By: W. Thaddeus Miller

Signature of authorized person (see instructions)

W. Thaddeus Miller

Printed or typed name of authorized person

Form 304 (Revised 12/09) Submit in duplicate to: Secretary of State P.O. Box 13697 Austin, TX 78711-3697 512 463-5555 FAX: 512/463-5709 **Filing Fee: $750**	**Application for Registration of a Foreign Limited Liability Company**	This space reserved for office use. **FILED** **In the Office of the Secretary of State of Texas** FEB 23 2011 **Corporations Section**

1. The entity is a foreign limited liability company. The name of the entity is:

Freestone Power Generation, LLC

Provide the full legal name of the entity as stated in the entity's formation document in its jurisdiction of formation.

2A. The name of the entity in its jurisdiction of formation does not contain the word "limited liability company" or "limited company" (or an abbreviation thereof). The name of the entity with the word or abbreviation that it elects to add for use in Texas is:

2B. The entity name is not available in Texas. The assumed name under which the entity will qualify and transact business in Texas is:

The assumed name must include an acceptable organizational identifier or an accepted abbreviation of one of these terms.

3. Its federal employer identification number is: 76-0608559

☐ Federal employer identification number information is not available at this time.

4. It is organized under the laws of: (set forth state or foreign country) Delaware

and the date of its formation in that jurisdiction is: 02/22/2011
mm/dd/yyyy

5. As of the date of filing, the undersigned certifies that the foreign limited liability company currently exists as a valid limited liability company under the laws of the jurisdiction of its formation.

6. The purpose or purposes of the limited liability company that it proposes to pursue in the transaction of business in Texas are set forth below.

Any lawful business or activity under the law of this State.

The entity also certifies that it is authorized to pursue such stated purpose or purposes in the state or country under which it is organized.

7. The date on which the foreign entity intends to transact business in Texas, or the date on which the foreign entity first transacted business in Texas is: 02/22/2011
mm/dd/yyyy *Late fees may apply (see instructions).*

8. The principal office address of the limited liability company is:

717 Texas Ave., Suite 1000	Houston	TX	USA	77002
Address	*City*	*State*	*Country*	*Zip/Postal Code*

Complete item 9A or 9B, but not both. Complete item 9C.

☑ 9A. The registered agent is an organization (cannot be entity named above) by the name of:

Corporation Services Company

OR

☐ 9B. The registered agent is an individual resident of the state whose name is:

First Name	M.I.	Last Name	Suffix

9C. The business address of the registered agent and the registered office address is:

Street Address	City	State	Zip Code
211 E. 7th St., Suite 620	Austin	TX	78701

10. The entity hereby appoints the Secretary of State of Texas as its agent for service of process under the circumstances set forth in section 5.251 of the Texas Business Organizations Code.

11. The name and address of each governing person is:

NAME AND ADDRESS OF GOVERNING PERSON (Enter the name of either an individual or an organization, but not both.)

IF INDIVIDUAL

First Name	M.I.	Last Name	Suffix

OR

IF ORGANIZATION

CalGen Expansion Company, LLC

Organization Name

Street or Mailing Address	City	State	Country	Zip Code
717 Texas Avenue, Suite 1000	Houston	TX	USA	77002

NAME AND ADDRESS OF GOVERNING PERSON (Enter the name of either an individual or an organization, but not both.)

IF INDIVIDUAL

First Name	M.I.	Last Name	Suffix

OR

IF ORGANIZATION

Organization Name

Street or Mailing Address	City	State	Country	Zip Code

NAME AND ADDRESS OF GOVERNING PERSON (Enter the name of either an individual or an organization, but not both.)

IF INDIVIDUAL

First Name	M.I.	Last Name	Suffix

OR

IF ORGANIZATION

Organization Name

Street or Mailing Address	City	State	Country	Zip Code

Supplemental Provisions/Information

Text Area: [The attached addendum, if any, is incorporated herein by reference.]

Effectiveness of Filing (Select either A, B, or C.)

A. ☑ This document becomes effective when the document is filed by the secretary of state.

B. ☐ This document becomes effective at a later date, which is not more than ninety (90) days from the date of signing. The delayed effective date is: _____

C. ☐ This document takes effect upon the occurrence of a future event or fact, other than the passage of time. The 90th day after the date of signing is: _____

The following event or fact will cause the document to take effect in the manner described below:

Execution

The undersigned affirms that the person designated as registered agent has consented to the appointment. The undersigned signs this document subject to the penalties imposed by law for the submission of a materially false or fraudulent instrument and certifies under penalty of perjury that the undersigned is authorized under the provisions of law governing the entity to execute the filing instrument.

Date: 02/15/2011

W Thaddeus Miller

Signature of authorized person (see instructions)

W. Thaddeus Miller

Printed or typed name of authorized person.

Bryan W. Shaw, Ph.D., *Chairman*
Carlos Rubinstein, *Commissioner*
Toby Baker, *Commissioner*
Zak Covar, *Executive Director*

TEXAS COMMISSION ON ENVIRONMENTAL QUALITY

Protecting Texas by Reducing and Preventing Pollution

July 10, 2012

Mr. Greg Maxim
Director
Duff and Phelps, LLC
919 Congress Ave Ste 1450
Austin, Texas 78701

Re: Notice of Negative Use Determination
Freestone Power Generation, LP
Freestone Energy Center
13.6 miles north on FM 488 from Fairfield
Fairfield (Freestone County)
Application Number: 07-11966; Tracking Number: DPFreestone B

Dear Mr. Maxim:

This letter responds to Freestone Power Generation, LP's Application for Use Determination for the Freestone Energy Center, remanded to the executive director on June 29, 2012, pursuant to the Texas Commission on Environmental Quality's (TCEQ) Tax Relief for Pollution Control Property Program

The TCEQ has completed the review for application #07-11966 and has issued a Negative Use Determination for the property in accordance with Title 30 Texas Administrative Code (TAC) §17.4 and §17.6. Heat recovery steam generators are used solely for production and, therefore, are not eligible for a positive use determination.

Please be advised that a Negative Use Determination may be appealed. The appeal must be filed with the TCEQ Chief Clerk within 20 days after the receipt of this letter in accordance with 30 TAC §17.25.

If you have questions regarding this letter or need further assistance, please contact Ronald Hatlett of the Tax Relief for Pollution Control Property Program by telephone at (512) 239-6348, by e-mail at ronald.hatlett@tceq.texas.gov, or write to the Texas Commission on Environmental Quality, Tax Relief for Pollution Control Property Program, MC-110, P.O. Box 13087, Austin, Texas 78711-3087.

Sincerely,

Chance Goodin, Team Leader
Stationary Source Programs
Air Quality Division

CG/RH

cc: Chief Appraiser, Freestone County Appraisal District, 218 N. Mount St., Fairfield, Texas 75840-3144

DUFF & PHELPS

Greg Maxim
Director
Phone:(512) 671-5580
gregory.maxim@duffandphelps.com

March 25, 2008

TCEQ - Cashiers Office MC-214
Building A
12100 Park 35 Circle
Austin, Texas 78753

Subject: Application for Use Determination for Pollution Control Property
Freestone Energy Center - 13.6 mi north on FM 488 from Fairfield, Fairfield, Texas

Enclosed please find one application (the "Application") for property tax exemptions for certain qualifying pollution control property at the Freestone Energy Center Project (the "Facility") in Freestone County, Texas.

Pursuant to Title 30 of Chapter 17 of the Texas Administrative Code, the Application has been prepared using the Texas Commission on Environmental Quality ("TCEQ") Application for Use Determination for Pollution Control Property. The enclosed application is a Tier IV Application.

Submission of this Application is required as a process step in the TCEQ's pollution control certification process for tax exemption of certain assets used in pollution control capacities within the Facility. As outlined by the application instructions, the fee for this Tier IV Application is $500. Enclosed please find a check for $500 for the Application processing.

The Application can be summarized as follows:

Property	Description	Estimated Cost
Tier IV	See Attached Schedule	$62,267,059

Please send one copy of the completed property tax exemption Use Determination to the following address:

Duff and Phelps LLC
c/o Greg Maxim
919 Congress Ave.
Suite 1450
Austin, TX 78701

If you have any questions regarding the Application or the information supplied with these Application, please contact Greg Maxim of Duff & Phelps, LLC at (512) 671-5580 or e-mail at gregory.maxim@duffandphelps.com.

Very truly yours,

DUFF & PHELPS LLC

Signature:

Name: Greg Maxim

Title: Director

Enclosures

TEXAS
COMMISSION
ON ENVIRONMENTAL
QUALITY

TEXAS COMMISSION ON ENVIRONMENTAL QUALITY
APPLICATION FOR USE DETERMINATION
FOR POLLUTION CONTROL PROPERTY

The TCEQ has the responsibility to determine whether a property is a pollution control property. A person seeking a use determination for pollution control property must complete the attached application or use a copy or similar reproduction. For assistance in completing this form refer to the TCEQ guidelines document, *Property Tax Exemptions for Pollution Control Property*, as well as 30 TAC §17, rules governing this program. For additional assistance please contact the Tax Relief for Pollution Control Property Program at (512) 239-3100. The application should be completed and mailed, along with a complete copy and appropriate fee, to: TCEQ MC-214, Cashiers Office, P.O. Box 13088, Austin, Texas 78711-3088.

1. GENERAL INFORMATION

A. What is the type of ownership of this facility?

- ☐ Corporation
- ☐ Partnership
- ☑ Limited Partnership
- ☐ Sole Proprietor
- ☐ Utility
- ☐ Other

B. Size of company: Number of Employees

- ☑ 1 to 99
- ☐ 100 to 499
- ☐ 500 to 999
- ☐ 1,000 to 1,999
- ☐ 2,000 to 4,999
- ☐ 5,000 or more

C. Business Description: Electric Power Generation

2. TYPE OF APPLICATION

- ☐ Tier I $150 Application Fee
- ☐ Tier II $1,000 Application Fee
- ☐ Tier III $2,500 Application Fee
- ☑ Tier IV $500 Application Fee

NOTE: Enclose a check, money order to the TCEQ, or a copy of the ePay receipt along with the applicaton to cover the required fee.

3. NAME OF APPLICANT

A. Company Name: Freestone Power Generation L.P.

B. Mailing Address (Street or P.O. Box): 717 Texas, Ste. 1000

C. City, State, ZIP: Houston, TX 77002

4. PHYSICAL LOCATION OF PROPERTY REQUESTING A TAX EXEMPTION

A. Name of facility: Freestone Energy Center

B. Type of Mfg Process or Service: Electric Power Generation

C. Street Address: 13.6 mi north on FM 488 from Fairfield.

D. City, State, ZIP: Fairfield, Texas 75840

E. Tracking Number Assigned by Applicant: DPFreestone B

F. Customer Number or Regulated Entity Number: N/A

5. APPRAISAL DISTRICT WITH TAXING AUTHORITY OVER PROPERTY

A. Name of Appraisal District: Freestone

B. Appraisal District Account Number: M-0012170-9900015; M-0012170-9900010;

07-11966

6. CONTACT NAME (must be provided)

A. Company/Organization Name:	Duff and Phelps LLC	
B. Name of Individual to Contact:	Greg Maxim	
C. Mailing Address:	919 Congress Ave.	Suite 1450
D. City, State, ZIP:	Austin, TX 78701	
E. Telephone number and fax number:	(512) 671-5580	Fax (512) 671-5501
F. E-Mail address (if available):	gregory.maxim@duffandphelps.com	

7. RELEVANT RULE, REGULATION, OR STATUTORY PROVISION

Please reference Section 8. Each item is detailed with the proper statute, regulation, or environmental regulatory provision.

8. DESCRIPTION OF PROPERTY

Background

The Freestone Energy Center ("the Project") is a nominally 1050 MW merchant power plant that is situated on a 63-acre site that is a portion of approximately 550 acres owned by Calpine in north central Texas, approximately 80 miles south of Dallas.

The primary equipment for the facility consists of four combustion turbine generators (CTGs), four heat recovery steam generators (HRSGs), and two steam turbine generators (STGs) (a "4~4x2" configuration). The equipment is configured into two largely independent power blocks, each consisting of 2 CTGs, 2 HRSGs, and 1 STG (thus, two 2x2~1 configurations).

The CTGs are General Electric model 7FAs. The CTGs are designed to compress air, mix and ignite the air with pipeline quality natural gas, expand the hot gas through a power turbine, and exhaust into the HRSGs. The combustion turbines utilize a proven Dry Low NOx (DLN) combustion system which will meet the permit requirement of 9 ppmvd @ 15% 02. The CTGs are also equipped with inlet fogging, which improves emissions of the turbine by cooling the inlet air.

The combustion turbines have been equipped with several devices and enhancements that further refine the airflow through the combustion path. By reducing the airflow through the combustors as load is reduced, the air to fuel ratio is maintained for proper combustion. These devices and enhancements do not affect the overall full load output of the combustion turbines. The General Electric 7FAs installed at Freestone incorporate the following:

1. The combustion system is a Dry low NOx (DLN-2.6) system designed to lower the NOx emissions to a level less than 9ppm or lower and also reduce CO to levels less than 15ppm or lower, as the primary emissions control mechanism. This is the latest development in GE low emissions combustion technology. It is a can-annular design (14 individual combustor baskets and transition pieces), which has six

premixed fuel nozzles per combustor, five on the periphery and one in the center.

2. An integral part of the DLN system is the IGV's (Inlet Guide Vanes), which are covered in the complete DLN cost. The IGV's are used in lower load operations to restrict the airflow through the turbine, thereby keeping the emissions in compliance with the DLN software algorithms. At base load, the guide vanes are essentially open. As load is reduced, the guide vanes close off limiting the amount of air flowing into the combustion system. The vanes are located at the inlet side of the combustion turbine compressor and are controlled by an electronic turbine governor based on turbine load.

The system consists of high efficiency combustion liners with thermal barrier coatings, re-designed transition pieces to better capture the combustion gases for more reliable operation and most importantly the 2.6 versions of fuel nozzles for cleaner burning of the fuel gas.

Each CTG exhausts into its own HRSG, which utilizes the exhaust heat to generate steam for use in the STG. Each HRSG is an unfired, three pressure, reheat unit. The steam from the HRSGs drives the STGs. Each of the two General Electric STGs is a reheat, two case, double flow low pressure, down exhaust design. Each STG exhausts into a water-cooled condenser which converts the exhaust steam to water to be pumped back to the HRSGs. The four HRSG's each have an exhaust stack that is approximately 155 feet in height. These stacks are designed to elevate release points of pollutants to improve the dispersion characteristic. This allows the exhaust stream to better mix with the ambient air resulting in lower concentrations of a variety of pollutants.

The cooling water for the STG condenser and other plant coolers will be supplied by the two cooling towers located on the site. Each power block will have one tower associated with it. The cooling towers cool the cooling water by evaporating a portion of the water as it passes over the fill in the tower. Mechanical draft fans draw air over the fill to enhance the cooling effect. The majority of water is recycled in this manner, with only a small wastewater flow required to keep solids buildup below acceptable levels. The raw water will be taken from an intake structure that is built on the Richland Chambers Reservoir and delivered to the Project site by way of a pipeline. This supply water is used directly as makeup water to the cooling towers to replace water lost to evaporation or which must be bled off as waste. The remaining water supply to be used in the HRSGs will be treated using sand filters, packed bed demineralizers, and finally mixed bed demineralizers for polishing. Wastewater from the plant is recycled as much as possible in the cooling tower, with final wastewater being discharged to the nearby Trinity River by way of a wastewater discharge line. The Utility Wastewater discharge stream will be continuously monitored to record flow, temperature, conductivity, and ph and dissolved oxygen for the purpose of reporting and complying with discharge limitations.

The storm water collection sewer system collects rainwater runoff from various portions of the Project and delivers runoff via a drainage system to a collection basin.

Overview of Combined Cycle Technology

The Facility is a combined-cycle gas turbine power plant consisting of gas Combustion Turbines ("CTs") equipped with heat recovery steam generators to capture heat from the gas turbine exhaust. Steam produced in the heat recovery steam generators powers a steam turbine generator(s) to produce additional electric power. The use of otherwise wasted heat in the turbine exhaust gas results in higher plant thermal efficiency compared to other power generation technologies. Combined-cycle plants currently entering service can convert over 50% of the chemical energy of natural gas into electricity (HHV basis). Employment of the Brayton Thermodynamic Cycle (Gas Turbine Cycle) in combination with the Rankine Thermodynamic Cycle results in the improved efficiency.

The Rankine cycle is a thermodynamic cycle that converts heat from an external source into work. In a Rankine cycle, external heat from an outside source is provided to a fluid in a closed-loop system. This fluid, once pressurized, converts the heat into work output using a turbine. The fluid most often used in a Rankine cycle is water (steam) due to its favorable properties, such as nontoxic and unreactive chemistry, abundance, and low cost, as well as its thermodynamic properties. The thermal efficiency of a Rankine cycle is usually limited by the working fluid. Without pressure reaching super critical the temperature range the Rankine cycle can operate over is quite small, turbine entry temperatures are typically 565°C (the creep limit of stainless steel) and condenser temperatures are around 30°C. Traditional coal fired and natural gas fired Rankine cycle power generation plants are limited by the inlet pressures and temperatures of the steam turbine design and the condenser vacuum and temperature. The Rankine cycle can achieve thermodynamic cycle efficiency (useful work obtained as a percentage of fuel input) ranging from 33% to 36%. However, if the Rankine cycle is used in conjunction with or as the "bottoming" cycle to the Brayton cycle the efficiencies can be improved as discussed below. This low turbine entry temperature (compared with a gas turbine) is why the Rankine cycle is often used as a bottoming cycle in combined cycle gas turbine power stations.

The Brayton cycle is a constant pressure thermodynamic cycle that converts heat from combustion into work. A Brayton engine, as it applies to a gas turbine system, will consist of a fuel or gas compressor, combustion chamber, and an expansion turbine. Air is drawn into the compressor, mixed with the fuel, and ignited. The resulting work output is captured through a pump, cylinder, or turbine. A Brayton engine forms half of a combined cycle system, which combines with a Rankine engine to further increase overall efficiency. Cogeneration systems typically make use of the waste heat from Brayton engines, typically for hot water production or space heating.

By combining both gas and steam cycles, high input temperatures and low output

temperatures can be achieved. The efficiency of the cycles are additive, because they are powered by the same fuel source. A combined-cycle plant has a thermodynamic cycle that operates between the gas turbine's high firing temperature and the waste heat temperature from the condensers of the steam cycle. This large range means that the Carnot efficiency of the cycle is high. The actual efficiency, while lower than this is still higher than that of either plant on its own. The thermal efficiency of a combined-cycle power plant is the net power output of the plant divided by the heating value of the fuel. Combined cycle power generation plants that produce only electricity can achieve thermodynamic efficiencies in the range of 53% to 59%, with the normal range being 53% to 56%. Combined cycle power generation plants that produce steam or hot water in conjunction with electric power can improve upon those values by "offsetting" fired boiler operations within adjacent industrial complexes. These facilities are known as combined cycle cogeneration units.

A single-train combined-cycle plant consists of one gas turbine generator, a heat recovery steam generator (HSRG) and a steam turbine generator ("1 x 1" configuration). As an example, an "FA-class" combustion turbine, the most common technology in use for large combined-cycle plants within the state of Texas and other locations throughout the United States, represents a plant with approximately 270 megawatts of capacity. ISO references ambient conditions at 14.7 psia, 59 F, and 60% relative humidity.

See Figure 1 – Standard Combined-Cycle Configuration, below.

It is common to find combined-cycle plants using two or even three gas turbine generators and heat recovery steam generators feeding a single, proportionally larger steam turbine generator. Larger plant sizes result in economies of scale for construction and operation, and designs using multiple combustion turbines provide improved part-load efficiency. A 2 x 1 configuration using FA-class technology will produce about 540 megawatts of capacity at International Organization for Standardization ("ISO") conditions. ISO references ambient conditions at 14.7 psia, 59 F, and 60% relative humidity.

Because of high thermal efficiency, high reliability, and lower air emissions, combined-cycle gas turbines have been the new resource of choice for bulk power generation for well over a decade. Other attractive features include significant operational flexibility, the availability of relatively inexpensive power augmentation for peak period operation and relatively low carbon dioxide production.

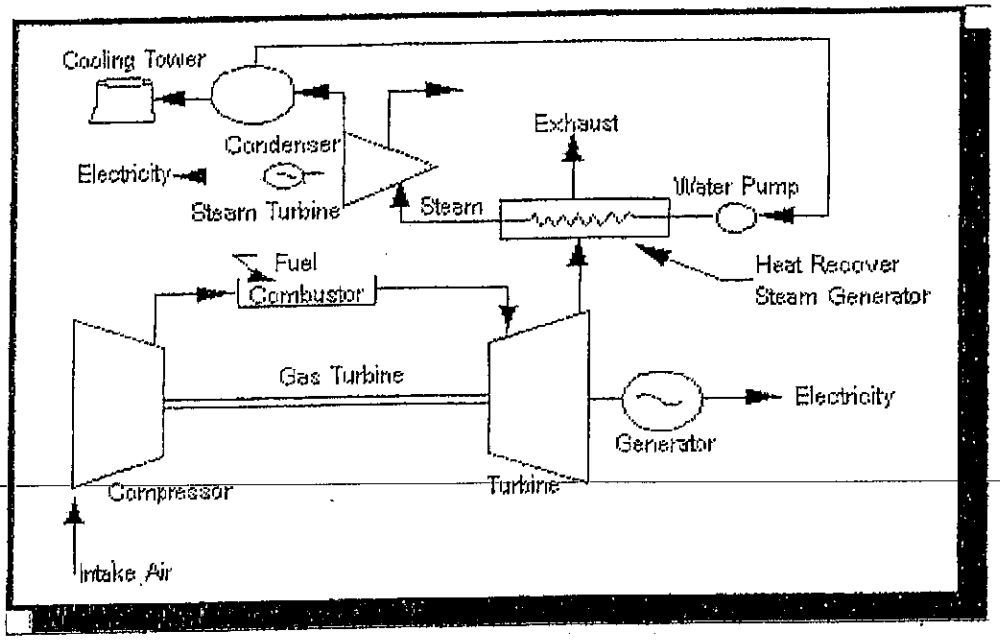

FIGURE 1 - Standard Combined-Cycle Configuration (1)

As an example, consider a gas turbine cycle that has an efficiency of 40%, which is a representative value for current Brayton Cycle gas turbines, and the Rankine Cycle has an efficiency of 30%. The combined-cycle efficiency would be 58%, which is a very large increase over either of the two simple cycles. Some representative efficiencies and power outputs for different cycles are shown in Figure 2 – Comparison of Efficiency and Power Output of Various Power Products, below.

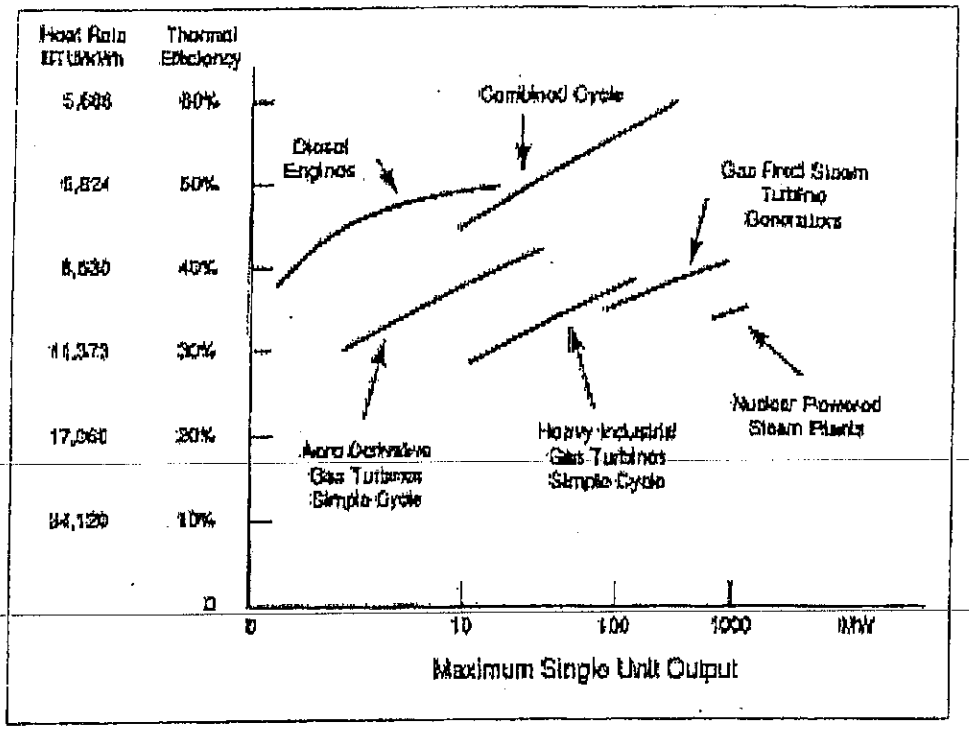

FIGURE 2 - Comparison of efficiency and power output of various power products [Bartol (1997)] (2)

Current Regulatory Authority for Output-Based Emissions

Innovative power technologies such as combined-cycle technology offer enormous potential to improve efficiency and enhance the environmental footprint of power generation through the reduction and/or prevention of air emissions to the environment. Currently, two thirds of the fuel burned to generate electricity in traditional fossil-fired steam boilers is lost. Traditional U.S. power generation facility efficiencies have not increased since the 1950s and more than one fifth of the U.S. power plants are more than 50 years old.(6) In addition, these facilities are the leading contributors to U.S. emissions of carbon dioxide, NOx, sulfur dioxide ("SO2"), and other contaminants into the air and water.

The ability to recognize and regulate the efficiency benefits of pollution reduction and/or prevention through the use of combined-cycle technology is achieved through the use of Output-Based emissions standards, incorporated since September 1998 within the U.S. EPA's new source performance standards ("NSPS") for NOx, from both new utility boilers and new industrial boilers. Pursuant to section 407(c) of the Clean Air Act in subpart Da (Electric Utility Steam Generating Units) and subpart Db (Industrial-Commercial-Institutional Steam Generating Units) of 40 CFR part 60, the U.S. EPA revised the NOx emissions limits for steam generating units for which construction, modification, or reconstruction commenced after July 9, 1997 (3). Output-Based regulations are also exemplified by those used in the U.S. EPA's NOx Cap and Trade Program for the NOx State Implementation Plan

("SIP") Call of 1998, which uses units of measure such as lb/MWh generated or lb concentration ("ppm"), which relate to the emissions to the productive output – electrical generation of the process.(4)

The use of innovative technologies such as combined-cycle units reduces fossil fuel use and leads to multi-media reductions in the environmental impacts of the production, processing transportation, and combustion of fossil fuels. In addition, reducing fossil fuel combustion is a pollution prevention measure that reduces emissions of all products of combustion, not just the target pollutant (currently NOx) of a federal regulatory program.

Authority to Expand Pollution Control Equipment & Categories in Texas

Under Texas House Bill 3732 ("HB3732") enacted in 2007, Section 11.31 of the Texas Tax Code is amended to add certain plant equipment and systems to the current list of air, water, or land pollution control devices exempt from property taxation in Texas.

Specifically, the language reads as follows:

SECTION 4. Section 11.31, Tax Code, is amended by adding Subsections (k), (l), and (m) to read as follows:
(k) The Texas Commission on Environmental Quality shall adopt rules establishing a nonexclusive list of facilities, devices, or methods for the control of air, water, or land pollution, which must include:
(1) coal cleaning or refining facilities;
(2) atmospheric or pressurized and bubbling or circulating fluidized bed combustion systems and gasification fluidized bed combustion combined-cycle systems;
(3) ultra-supercritical pulverized coal boilers;
(4) flue gas recirculation components;
(5) syngas purification systems and gas-cleanup units;
(6) enhanced heat recovery systems;
(7) exhaust heat recovery boilers;
(8) heat recovery steam generators;
(9) superheaters and evaporators;
(10) enhanced steam turbine systems;
(11) methanation;
(12) coal combustion or gasification byproduct and coproduct handling, storage, or treatment facilities;
(13) biomass cofiring storage, distribution, and firing systems;
(14) coal cleaning or drying processes, such as coal drying/moisture reduction, air jigging, precombustion decarbonization, and coal flow balancing technology;
(15) oxy-fuel combustion technology, amine or chilled ammonia scrubbing, fuel or emission conversion through the use of catalysts, enhanced scrubbing technology, modified combustion technology such as chemical looping, and cryogenic technology;
(16) if the United States Environmental Protection Agency adopts a final rule or regulation regulating carbon dioxide as a pollutant, property that is used, constructed, acquired, or installed wholly or partly to capture carbon dioxide from an anthropogenic source in this state that is geologically sequestered in this state;
(17) fuel cells generating electricity using hydrogen derived from coal, biomass, petroleum coke, or solid waste; and
(18) any other equipment designed to prevent, capture, abate, or monitor nitrogen oxides, volatile organic compounds, particulate matter, mercury, carbon monoxide, or any criteria pollutant.
(l) The Texas Commission on Environmental Quality by rule shall update the list adopted under Subsection (k) at least once every three years. An item may be removed from the list if the commission finds compelling evidence to support the conclusion that the item does not provide pollution control benefits.
(m) Notwithstanding the other provisions of this section, if the facility, device, or method for the

control of air, water, or land pollution described in an application for an exemption under this section is a facility, device, or method included on the list adopted under Subsection (k), the executive director of the Texas Commission on Environmental Quality, not later than the 30th day after the date of receipt of the information required by Subsections (c)(2) and (3) and without regard to whether the information required by Subsection (c)(1) has been submitted, shall determine that the facility, device, or method described in the application is used wholly or partly as a facility, device, or method for the control of air, water, or land pollution and shall take the actions that are required by Subsection (d) in the event such a determination is made.

Under the TCEQ's recently updated "Tax Relief for Pollution Control Property – Application Instructions and Equipment and Categories List – Effective January 2008", the Equipment and Categories List - Part B ("ECL Part B") is a list of the pollution control property categories adopted and set forth in TTC Sec. 26.045(f). The taxpayer is to supply a pollution control percentage for the equipment listed in Part B via calculations demonstrating pollution control, prevention and/or reductions achieved by the listed equipment or systems.

The following property descriptions outline the environmental purpose, including the anticipated environmental benefit of pollution control additions considered under the Application Instructions' ECL Part B that have been constructed and placed into use at the Facility as of its placed-in-service date, or installed subsequent to in-service since 1994:

Property Descriptions

Item #1 Combined-Cycle Gas Turbine Plant Heat Recovery Steam Generator ("HRSG") and Support Systems Tier IV B-8

40 CFR Part 60 Subparts DA and DB, NOx Limits for Electric Utility Steam Generating Units and Industrial-Commercial-Institutional Steam Generating Units for New Source Performance Standards ("NSPS").

TAC Rule 106.512, Standard Permit for Electric Generating Units (EGU)

NOTE: Permits issued under Texas Clean Air Act's Health & Safety Code Sections 382.011, applies to all electric generating units that emit air contaminants, regardless of size, and it is to reflect Best Available Control Technology ("BACT") for electric generating units on an output basis in pounds of NOx per megawatt hour, adjusted to reflect a simple cycle power plant.

The heat recovery steam generator ("HRSG") found in the Facility is a heat exchanger that recovers heat from a hot gas stream. It produces steam that can be used in a process or used to drive a steam turbine. A common application for an HRSG is in a combined-cycle power station, where hot exhaust from a gas turbine is fed to an HRSG to generate steam which in turn drives a steam turbine. This combination produces electricity in a more thermally efficient manner than either the gas turbine or steam turbine alone.

The Facility's HRSGs consist of three major components: the Evaporator, Superheater, and Economizer. The different components are put together to meet the operating requirements of the unit. Modular HRSGs normally consist of three sections: an LP (low pressure) section, a reheat/IP (intermediate pressure) section, and an HP (high pressure) section. The reheat and IP sections are separate circuits inside the HRSG. The IP steam partly feeds the reheat section. Each section has a steam drum and an evaporator section where water is converted to steam. This steam then passes through superheaters to raise the temperature and pressure past the saturation point.

Item #2 Steam Turbine and Support Systems Tier IV B-10

40 CFR Part 60 Subparts DA and DB, NOx Limits for Electric Utility Steam Generating Units and Industrial-Commercial-Institutional Steam Generating Units for New Source Performance Standards ("NSPS").

TAC Rule 106.512, Standard Permit for Electric Generating Units (EGU)

NOTE: Permits issued under Texas Clean Air Act's Health & Safety Code Sections 382.011, applies to all electric generating units that emit air contaminants, regardless of size, and it is to reflect Best Available Control Technology ("BACT") for electric generating units on an output basis in pounds of NOx per megawatt hour, adjusted to reflect a simple cycle power plant.

The steam turbine(s) found in the Facility operate on the Rankine cycle in combination with the Brayton cycle, as described above. Steam created in the Facility HRSG(s) from waste heat that would have otherwise been lost to the atmosphere enters the steam turbine via a throttle valve, where it powers the turbine

and connected generator to make electricity. Use of HRSG/Steam Turbine System combination provides the Facility with an overall efficiency of greater than 50%. Steam turbine systems similar to the Facility's have a history of achieving up to 95% availability on an annual basis and can operate for more than a year between shutdown for maintenance and inspections. (5)

Pollution Control Percentage Calculation: Avoided Emissions Approach

To calculate the percentage of the equipment or category deemed to be pollution control equipment, the Avoided Emissions approach has been used. This approach relies on thermal output differences between a conventional power generation system and the combined-cycle system at the Facility. Specifically, the percentage is determined by calculating the displacement of emissions associated with the Facility's thermal output and subtracting these emissions from a baseline emission rate. These displaced emissions are emissions that would have been generated by the same thermal output from a conventional system.

Greater energy efficiency reduces all air contaminant emissions, including the greenhouse gas, carbon dioxide. Higher efficiency processes include combined-cycle operation and combined heat and power ("CHP") generation. For electric generation the energy efficiency of the process expressed in terms of millions of British thermal units ("MMBTU's") per Megawatt-hour. Lower fuel consumption associated with increased fuel conversion efficiency reduces emissions across the board – that is NOx, SOx, particulate matter, hazardous air pollutants, and greenhouse gas emissions such as CO2.

In calculating the percent exempt for the listed items from the ECL-Part B, we utilized Output-Based NOx allocation method for both power generation projects that replaced existing facilities and "Greenfield" power and heat generation facilities. We looked at the various fossil fuel technologies in use today and chose the baseline facility to be a natural gas fuel-fired steam generator. We benchmarked this conventional generation to the subject natural gas-fired combined cycle generator at the Facility. By doing so, we narrowed the heat rate factors as much as possible to be conservative and uniform in modeling. The benchmark heat rate factor is the following:

Natural Gas fuel-fired Steam Generator: 10,490 BTU's/kWh

This baseline heat rate purposely omits other fossil fuel sources in order to eliminate impurity type characteristics, which in turn eliminated the NOx emission and cost of control differences of each fossil fuel and generator type. Comparing the emissions impact of different energy generation facilities is concise when emissions are measured per unit of useful energy output. For the purpose of our calculations, we converted all the energy output to units of MWh (1 MWh = 3.413 MMBTU), and compared the total emission rate to the baseline facility.

The comparison steps to calculate the NOx reduction is as follows:

Calculation (Reference Schedule A)

Step 1 – Subject Output-Based Limit Calculation (lbs NOx / MWh)

(Input-based Limit (lbs NOx/MMBTU)) X (Heat Rate (Btu/kWh)) / (1,000,000 Btu / 1,000 kWh) = Output: (lbs NOx/MWh).

Step 2 – Subject Output Conversion Calculation (NOx Tons / Year)

(Output (lbs NOx/MWh) X (Unit Design Capacity (MW)) X (Capacity Factor) X ((365 Days) X (24 hrs/day)) / 2,000 lbs = Output: (NOx Tons/Year)

Step 3 – Baseline Output-Based Limit Calculation (lbs NOx / MWh)

(Input-based Limit (lbs NOx/MWh)) X (Heat Rate (Btu/kWh)) / (1,000,000 Btu / 1,000 kWh) = Output: (lbs NOx/MWh)

Step 4 – Baseline Output Conversion Calculation (NOx Tons / Year)

(Output (lbs NOx/MMBtu) X (Unit Design Capacity (MW)) X (Capacity Factor) X ((365 Days) X (24 hrs/day)) / 2,000 lbs = Output: (NOx Tons/Year)

Step 5 – Percent NOx Reduction Calculation

$((\text{Output Baseline})_{\text{step 4}} - (\text{Output Subject}))_{\text{step 2}} \ / \ (\text{Output Subject})_{\text{step 2}}$ = % Reduction Output Subject

Step 6 – Percent Exempt Calculation

(Total Subject Facility Cost) X (% NOx Reduction) = Capital Cost of NOx Avoidance

Step 7 – Percent Exempt Calculation

Total Cost of NOx Avoidance / Total Cost of HB 3732 Equipment = % Exempt

- If % Exempt is greater than 100% HB 3732 Equipment is 100% Exempt
- If % Exempt is less than 100% then HB 3732 Equipment is partially exempt at the Step 6 calculation.

NOTE: See the attached calculation sheet for the details regarding Facility-specific calculations and property tax exemption percentage results based upon these calculations.

REFERENCES

1. "Output-Based Regulations: A Handbook for Air Regulators", U.S. Environmental Protection Agency, Office of Atmospheric Programs – Climate Protection Partnerships Division, August, 2004, p.4.

2. "Output-Based Emissions Standards; Advancing Innovative Energy Technologies", Northeast-Midwest Institute; 2003, p. 9.

3. IBID, p.13.

4."Output-Based Regulations: A Handbook for Air Regulators", U.S. Environmental Protection Agency, Office of Atmospheric Programs – Climate Protection Partnerships Division, August, 2004, p.4.

5. http://www.cogeneration.net/Combined_Cycle_Power_Plants.htm

6. "Output-Based Emissions Standards; Advancing Innovative Energy Technologies", Northeast-Midwest Institute; 2003, p. 9.

9. PARTIAL PERCENTAGE CALCULATION

N/A.

10. PROPERTY CATEGORIES AND COSTS

See attached Schedule 10.

11. EMISSION REDUCTION INCENTIVE GRANT

Will an application for an Emission Reduction Incentive Grant be on file for this property/project:

[ ] Yes [X] No

12. APPLICATION DEFICIENCIES

After an initial review of the application, the TCEQ may determine that the information provided with the application is not sufficient to make a use determination. The TCEQ may send a notice of deficiency, requesting additional information that must be provided within 30 days of written notice.

13. FORMAL REQUEST FOR SIGNATURE

By signing this application, you certify that this information is true to the best of your knowledge and belief.

NAME: [signature] DATE: 25 March 2008

TITLE: Director

COMPANY: Duff & Phelps LLC

Under Texas Penal Code, Section 37.10, if you make a false statement on this application, you could receive a jail term of up to one year and a fine up to $2,000, or a prison term of two to 10 years and a fine of up to $5,000.

14. DELINQUENT FEE/PENALTY PROTOCOL

This form will not be processed until all delinquent fees and/or penalties owed to the TCEQ or the Office of the Attorney General on behalf of the TCEQ are paid in accordance with the Delinquent Fee and Penalty Protocol. (Effective 9/1/2006)

Calpine
Freestone
TCEQ Use Determination Application - 2008
Schedule 10
Tier IV

10. PROPERTY CATEGORIES AND COST

PROPERTY	PROJECT ID. NO.	IN SERVICE DATE	TAXABLE ON OR BEFORE 1/1/94? (Y / N)	TIER IV DECISION FLOW CHART BOX	ECL NUMBER	ESTIMATED PURCHASE COST	% EXEMPT	EXEMPT COST
Heat Recovery Steam Generators (HRSG)	1	2002	N	3	B-8	$ 53,270,644	100%	$ 53,270,644
Steam Turbine Systems	2	2002	N	3	B-10	$ 8,996,415	100%	$ 8,996,415
					Tier IV Total	$ 62,267,059		$ 62,267,059

Calpine
Freestone
Schedule A - 2008 Thermal Efficiency Calculation

Subject Details:

Average Heat Rate [1]		7,050 (Btu/kWh)
NOx Emissions [2]		403 Tons year
Plant Capacity [3]		1,038 MW
Capacity Factor [4]		47.05%
Technology [5]		Combined Cycle
Total Subject Facility Cost [6]	$	492,000,000
Total Cost of Tier IV Equipment [7]	$	62,267,050

Baseline Details:

Average Heat Rate [8]	10,490 Btu/kWh
Technology [9]	Steam Turbine

STEP 1
Subject Output-Based Limit Calculation (lbs NOx / MWh)

Input-based Limit (lbs NOx/MMBtu)	x	Heat Rate (Btu/kWh)	/	Unit Conversions (1,000,000 Btu / 1000 kWh)	=	Output-based Limit (lbs NOx/MWh)
0.0292		7,050		1,000		0.2061

STEP 2
Subject Output Conversion Calculation (NOx Tons / Year)

Output-based Limit (lbs NOx/MWh)	x	Capacity (MW)	x	Capacity Factor	x	Unit Conversions (365 days * 24 Hours / 2,000 lbs)	=	Output NOx (Tons/Year)
0.2061		1038		47.05%		4		402.7

STEP 3
Baseline Output-Based Limit Calculation (lbs NOx / MWh)

Input-based Limit (lbs NOx/MMBtu)	x	Heat Rate (Btu/kWh)	/	Unit Conversions (1,000,000 Btu / 1000 kWh)	=	Output-based Limit (lbs NOx/MWh)
0.0292		10,490		1,000		0.3063

STEP 4
Baseline Output Conversion Calculation (NOx Tons / Year)

Output-based Limit (lbs NOx/MWh)	x	Capacity (MW)	x	Capacity Factor	x	Unit Conversions (365 days * 24 Hours / 2,000 lbs)	=	Output NOx (Tons/Year)
0.3063		1038		47.05%		4		598.4

STEP 5
Percent NOx Reduction Calculation

(Output Baseline	-	Output Subject)	/	Output Subject	=	% NOx Reduction
598.4		402.7		402.7		48.6%

STEP 6
Percent Exempt Calculation

Total Subject Unit Cost	X	% NOx Reduction	=	Capital Cost of NOx Avoidance
$492,000,000		48.6%		$239,112,000

STEP 7
Percent Exempt Calculation

Total Cost of NOx Avoidance	/	Total Cost of Tier IV Equipment	=	% Exempt
$239,112,000		$62,267,050		384.0%

Conclude	100%

(1) - Heat rate represents plant actual heat rate (HHV) and was provided by the client
(2) - NOx emissions is the actual NOx pollutant produce in ppm and was provide by the client
(3) - Plant capacity is the average nominal capacity and was provided by the client
(4) - Capacity factor represent an average annual capacity factor and was provided by the client "Average" was determined by a weighted average based on the net actual generation of 3H
(5) - Technology represents the actual technology of the subject
(6) - Total subject facility cost represents the total cost to build the entire facility and it was determined based on data provide by the client
(7) - Total Tier IV equipment was determined by allocating the eligible TCEQ ECL part B equipment and their associated cost from actual data provide by the client
(8) - Baseline heat rate was published by the Energy Information Administration ("EIA")
(9) - Baseline technology represents the technology that the subject would have replaced at the time of the subjects construction

Buddy Garcia, *Chairman*
Larry R. Soward, *Commissioner*
Bryan W. Shaw, Ph.D., *Commissioner*
Glenn Shankle, *Executive Director*

TEXAS COMMISSION ON ENVIRONMENTAL QUALITY

Protecting Texas by Reducing and Preventing Pollution

May 1, 2008

DUFF & PHELPS LLC
GREG MAXIM
919 CONGRESS #1450
AUSTIN, TX 78701

This letter is to inform you that on 5/1/2008, the technical review of Use Determination Application 07-11966 was completed. This application is for:

FREESTONE POWER GENERATION LP
FREESTONE ENERGY CENTER
13.6 MI N ON FM 488
FAIRFIELD, TX 75840

The use determination is included with this letter. In order to request an exemption, a copy of this Use Determination, along with a completed exemption request form #50-248 (can be found at www.cpa.state.tx.us), must be provided to the Chief Appraiser of the appropriate appraisal district. This request must be made by April 30.

House Bill 3121, enacted during the 77th Legislative Session, established a process for appealing a use determination. The Texas Commission on Environmental Quality (TCEQ) rules that implement the appeals process are at 30 TAC 17.25. Pursuant to 17.25(a)(1), an appeal must be filed within 20 days of receipt of the use determination. Should you choose to appeal the use determination, please submit a copy of your appeal to the TCEQ Tax Relief for Pollution Control Property program at the time of filing the appeal with the Chief Clerk of the commission.

If you have any questions or require any additional information, please contact the Tax Relief for Pollution Control Property Program at (512) 239-3100.

Sincerely,

David Greer
Team Leader, Pollution Prevention

Buddy Garcia, *Chairman*
Larry R. Soward, *Commissioner*
Bryan W. Shaw, Ph.D., *Commissioner*
Glenn Shankle, *Executive Director*

TEXAS COMMISSION ON ENVIRONMENTAL QUALITY

Protecting Texas by Reducing and Preventing Pollution

USE DETERMINATION

The Texas Commission on Environmental Quality has reviewed Use Determination Application, **07-11966**, filed by:

FREESTONE POWER GENERATION LP
FREESTONE ENERGY CENTER
13.6 MI N ON FM 488
FAIRFIELD TX 75840

The pollution control property/project listed in the Use Determination Application is:

This facility has four thermally efficient heat recovery steam generators (HRSGs) and two steam turbines. This application is a Tier IV application seeking a partial use determination for the HRSGs and the enhanced steam turbines.

The outcome of the review is:

A 100% positive use determination for the four Heat Recovery Steam Generators. This equipment is considered to be pollution control equipment and was installed to meet or exceed federal or state regulations.

A negative determination is issued for the two steam turbines. The use of the steam turbines does not provide an environmental benefit at the site. The steam turbines are not considered to be pollution control equipment.

Executive Director

May 1 2008
Date

TAX RELIEF FOR POLLUTION CONTROL PROPERTY: TECHNICAL REVIEW DOCUMENT

Reviewed By: RLH App. No.: 07 - 11966 Review Start Date: 4/8/2008

Company Name: FREESTONE POWER GENERATION LP
Facility Name: FREESTONE POWER GENERATION LP
County: FREESTONE Outstanding Fees: N
Batch/Voucher Number:B500156

ADMINISTRATIVE REVIEW

Administrative Complete Date:4/8/2008

TIER LEVEL
What Tier is this application? The application was filed as a Tier IV application. Is this the appropriate level?

The property listed on this application, Heat Recovery Steam Generators and a steam turbine are items B8 and B10 on the Equipment and Categories List. This application was filed as a Tier IV. Tier IV is the appropriate level for this application.

RELEVANT RULE, REGULATION, OR STATUTORY PROVISION
The rule listed in the application is: 40 CFR 60.44Da
The appropriate rule is: 40 CFR 60.44Da

Explain why this is the appropriate rule?

40 CFR 60.Subpart DA: Standards of Performance for New Stationary Sources. Standards of performance for Electric Utility Steam Generating Units for Which Construction is Commenced after September 18, 1978. This is an appropriate rule.

BRIEF DESCRIPTION OF PROPERTY
The property is described as:

This facility has four thermally efficient heat recovery steam generators (HRSGs) and two steam turbines. This application is a Tier IV application seeking a partial use determination for the HRSGs and the enhanced steam turbines.

Is an adequate description and purpose of the property provided? Does it list the anticipated environmental benefits? Are sketches and flow diagrams provided if needed?

An adequate description of the property was provided, and the purpose of the property was listed. The anticipated environmental benefit is listed. Sketches and flow diagrams were provided.

DECISION FLOWCHART(30 TAC 17.15(a))
Mark the appropriate boxes: Box 3 Box 5 Box 6(IV) Y Box 10(III) Box 12(I) Box 13(II)
PART B DECISION FLOWCHART (17.15(b))
Mark the appropriate boxes: Box 1Y Box 2 Y Box 3 Y

Describe how the property flowed through the Decision Flowchart:

Since the property is listed on Part B of the Equipment & Categories List this property leaves the Decision Flow Chart at Box 6. It passes through Box 1 of the Part B Decision Flow Chart with a yes answer. The use of this property at a combined cycle plant. as opposed to having a simple

cycle plant, provides an environmental benefit of reduced NOx emissions at the site. So there is a Yes answer for Box 2. Since there is a reduction in NOx emissions there is an environmental rule which is being met so there is a yes answer to Box 3. The steam turbine passes through Box 1 on the Part B Decision Flow Chart with a yes answer. Since the use of the steam turbine does not provide an environmental benefit at the site a no answer is the result of Box 2. The steam turbine is not eligible for a positive determination.

TIER III or IV APPLICATIONS

Does your calculation agree with the applicants?

No. The application contains a proposed formula for calculating the pollution control value of the HRSGs and the steam turbine. The formula is outcome determinative, and its focus is not on the pollution control aspect of the property. The Executive Director disagrees with this formula.

PROPERTY CATEGORIES AND COSTS

Is the table completed correctly? Has the applicant certified that all listed property became taxable for the first time after January 1, 1994? Is all information necessary for conducting the technical review included.

The table was completed correctly. The applicant certified that all listed property became taxable for the first time after January 1, 1994. All the information necessary for conducting the technical review was included on the application.

TECHNICAL DEFICIENCIES

Is the application complete as received: Y If the application was not administratively complete explain below when justifying the final decision in the final determination section. If the application was not technically complete then:

Provide the language to be used in the Notice of Deficiency (NOD) letter:

Summarize the NOD response:

Provide the language used in the second NOD letter:

Summarize the second NOD response:

Provide the language used in the thied NOD letter:

Summarize the third NOD response:

FINAL DETERMINATION

If the property description has been summarized enter the detailed property description:

This facility has four thermally efficient heat recovery steam generators (HRSGs) and two steam

turbines. This application is a Tier IV application seeking a partial use determination for the HRSGs and the enhanced steam turbines.

Provide the reason for your final determination:

The Heat Recovery Steam Generators meet all of the requirements of Chapter 17. A positive use determination based on the most appropriate formula should be issued for the Heat Recovery Steam Generators. The most appropriate formula has been determined by the Executive Director. A negative determination should be issued for the steam turbine. The use of the steam turbine does not result in there being an environmental benefit at the site.

Provide the language for the final determination.

A positive use determination of 100% for the four Heat Recovery Steam Generators. A negative determination is issued for the steam turbine. The use of the steam turbine does not provide an environmental benefit at the site. The steam turbine is not considered to be pollution control equipment.

Highlight the required signatures and establish the appropriate due dates.

Reviewed: [signature] **Date Signed:** 5/1/08

Peer Reviewed: [signature] **Date Signed:** 5-1-08

Team Leader: [signature] **Date Signed:** 5/1/08

Section Manager: [signature] **Date Signed:** MAY 1 2008

Division Director: [signature] **Date Signed:** MAY 1 2008

TEXAS COMMISSION ON ENVIRONMENTAL QUALITY (TCEQ)

TO: Greg Maxim
Duff and Phelps, LLC
919 Congress Avenue, Suite 1450
Austin, Texas 78701

Ron Hatlett, TCEQ, SBEA, Mail Code 110

Stephanie Bergeron Perdue, TCEQ, OLS-Environmental Law, Mail Code 173

Celeste Baker, TCEQ, OGC, Mail Code 101

Office of Public Interest Counsel, TCEQ, Mail Code 103

FROM: Office of the Chief Clerk, TCEQ, Mail Code 105

DATE: May 27, 2008

RE: 30 TAC § 17.25 - Appeal of Use Determination Issued by the Executive Director Regarding Freestone Power Generation LP, TCEQ ID No. 07-11966, Docket No. 2008-0831-MIS-U.

The enclosed appeal was filed in the Office of the Chief Clerk (OCC) of the Texas Commission on Environmental Quality (TCEQ) by the Chief Appraiser of Freestone County on the date indicated by the Chief Clerk's date stamp. Pursuant to 30 TAC § 17.25(c)(1) and (2), the Chief Clerk is delivering a copy of the appeal to the Executive Director and to the Applicant.

As required in § 17.25(c)(3), OCC will schedule the appeal for consideration at a future commission meeting, and you should expect to receive adequate notice of that date in the near future.

Freestone Central Appraisal District

218 North Mount
Fairfield, Texas 75840

Bud Black, Chief Appraiser

Tel (903) 389-5510
Fax (903) 389-5955

TEXAS COMMISSION ON ENVIRONMENTAL QUALITY
2008 MAY 16 AM 9:29
CHIEF CLERKS OFFICE

May 14, 2008

Office of the Chief Clerk - MC 105
Texas Commission on Environmental Quality
PO Box 13087
Austin, TX. 78711-3087

Re: TCEQ Use Determination No. 07-11966

Dear Sirs:

I am writing this letter as an official appeal of the Use Determination with TCEQ tracking number 07-11966, filed by Freestone Power Generation LP. It is our belief that heat recovery boilers described in this application are production equipment and not pollution equipment. Therefore, the primary purpose of this equipment is not to satisfy air pollution standards and does not qualify for a 100% tax exemption.

We respectfully request that our appeal regarding this Use Determination be granted.

Thank you for your consideration. Pritchard & Abbott, Inc., will be acting as our agent for this appeal.

Sincerely,

Bud Black, RPA/CTA
Chief Appraiser

BB/

Buddy Garcia, *Chairman*
Larry R. Soward, *Commissioner*
Bryan W. Shaw, Ph.D., *Commissioner*
Mark R. Vickery, P.G., *Executive Director*

TEXAS COMMISSION ON ENVIRONMENTAL QUALITY

Protecting Texas by Reducing and Preventing Pollution

December 3, 2008

LaDonna Castañuela, Chief Clerk
Texas Commission on Environmental Quality
Office of the Chief Clerk, MC-105
P.O. Box 13087
Austin, Texas 78711-3087

Re: TCEQ Docket Numbers:
2008-0830-MIS-U (UD 07-11914/Tenaska Gateway Partners, Ltd)
2008-0831-MIS-U (UD 07-11966/Freestone Power Generation, L.P)
2008-0832-MIS-U (UD 07-11971/Borger Energy Associates, LP)
2008-0849-MIS-U (UD 07-11969/Brazos Valley Energy, L.P.)
2008-0850-MIS-U (UD 07-11994/Freeport Energy Center, L.P.)
2008-0851-MIS-U (UD 07-11926/Navasota Wharton Energy Partners, LP)
Executive Director's Response Brief to Rusk County, Freestone Central, Hutchinson County, Fort Bend Central, Brazoria County, and Wharton County Appraisal Districts' Appeals of the Executive Director's Use Determinations

Dear Ms. Castañuela:

Enclosed for filing, please find an original and 7 copies of the *"Executive Director's Response Brief to Rusk County, Freestone Central, Hutchinson County, Fort Bend Central, Brazoria County, and Wharton County Appraisal Districts' Appeals of the Executive Director's Negative Use Determinations."*

Please file-stamp these documents and return one copy to D. A. Chris Ekoh, Staff Attorney, Environmental Law Division, MC 173. If you have any questions, please do not hesitate to contact me at (512) 239-5487.

Sincerely,

D. A. Chris Ekoh, Staff Attorney
Environmental Law Division

TCEQ Docket Numbers
2008-0830-MIS-U (UD 07-11914/Tenaska Gateway Partners, Ltd – Rusk County)
2008-0831-MIS-U (UD 07-11966/Freestone Power Generation, L.P. – Freestone County)
2008-0832-MIS-U (UD 07-11971/Borger Energy Associates, LP – Hutchinson County)
2008-0849-MIS-U (UD 07-11969/Brazos Valley Energy, L.P. – Fort Bend County)
2008-0850-MIS-U (UD 07-11994/Freeport Energy Center, L.P. – Brazoria County)
2008-0851-MIS-U (UD 07-11926/Navasota Wharton Energy Partners, LP – Wharton County)

APPEAL OF THE EXECUTIVE	**§**	**BEFORE THE**
DIRECTOR'S USE DETERMINATIONS	**§**	
ISSUED TO	**§**	
TENASKA GATEWAY PARTNERS, LTD;	**§**	
FREESTONE POWER GENERATION, L.P.;	**§**	**TEXAS COMMISSION ON**
BORGER ENERGY ASSOCIATES, LP;	**§**	
BRAZOS VALLEY ENERGY, L.P.;	**§**	
FREEPORT ENERGY CENTER, L.P.; and	**§**	
NAVASOTA WHARTON ENERGY	**§**	
PARTNERS, LP	**§**	**ENVIRONMENTAL QUALITY**

EXECUTIVE DIRECTOR'S RESPONSE BRIEF TO RUSK COUNTY, FREESTONE CENTRAL, HUTCHINSON COUNTY, FORT BEND CENTRAL, BRAZORIA COUNTY, AND WHARTON COUNTY APPRAISAL DISTRICTS' APPEALS OF THE EXECUTIVE DIRECTOR'S USE DETERMINATIONS

The Executive Director of the Texas Commission on Environmental Quality (the Commission or TCEQ) files this Response to the Appeals of the Executive Director's Use Determinations Issued to Tenaska Gateway Partners, Ltd (Tenaska); Freestone Power Generation, L.P. (Freestone); Borger Energy Associates, LP (Borger); Brazos Valley Energy, L.P (Brazos); Freeport Energy Center, L.P (Freeport); and Navasota Wharton Energy Partners, LP (Navasota). The appeals were submitted by or on behalf of the affected county appraisal districts. The regulated entities did not appeal the Executive Director's use determinations.

For the reasons described below, the Executive Director respectfully requests that the Commission adopt the recommendation of the Executive Director and remand the respective appeals to the Executive Director to issue new determinations consistent with the Executive Director's recommendation as adopted by the Commission.

Part I of this brief presents a background of the Tax Exemption for Pollution Control Property Program, including a discussion of House Bill 3732; Part II discusses the procedural history of each application including the Executive Director's determinations; Part III describes the devices involved in these appeals, and the circumstances leading to the formation of a Workgroup to assist in establishing the method of calculating the proper pollution control percentage for the devices; and Part IV presents the Executive Director's recommendation to the Commission on the proper pollution control percentage to adopt for the devices involved in these appeals.

I.

PROGRAM BACKGROUND

These appeals of the Executive Director's use determinations are filed pursuant to H.B. 3121 (77th Tex. Legislature, 2001) establishing an appeals process for use determinations and the Commission rules implementing the legislation.[1]

In 1993, the citizens of Texas voted to adopt a tax measure called Proposition 2 (Prop 2). Prop 2 was implemented when Article 8, § 1-l was added to the Texas Constitution on November 2, 1993. The amendment allowed the legislature to "exempt from ad valorem taxation all or part of real and personal property used, constructed, acquired, or installed wholly or partly to meet or exceed rules or regulations adopted by any environmental protection agency of the United States, this state, or a political subdivision of this state for the prevention, monitoring, control, or reduction of air, water, or land pollution."[2]

The Texas Legislature codified the constitutional amendment in 1993 as TEX. TAX CODE § 11.31 (effective January 1, 1994). The statutory language in the codified version mirrored the language of Article 8, § 1-l. The statute sets up a two-step process to obtain tax exemption for pollution control property. First, a person seeking tax exemption for pollution control property must obtain a positive use determination from the Executive Director that the property is used wholly or partly for pollution control.[3] Second, once a person obtains a positive use determination from the Executive Director, the person then applies to the appraisal district where the property is located to receive the actual tax exemption. It is the performance of this second step by the chief appraiser that removes the property from the tax roll.[4]

In 2001, the legislature amended Section 11.31 when it passed House Bill 3121 (effective September 1, 2001). This bill added several procedural requirements to Section 11.31, including a provision requiring the establishment and implementation of a process to appeal use determinations.[5] The amendment authorized the Commission to adopt rules establishing specific standards for the Executive Director to follow in making use determinations for property that qualified for either full or partial determinations.[6]

In 2007, the legislature amended Section 11.31 when it passed House Bill 3732 (effective September 1, 2007).[7] The amendment added three new subsections to Section 11.31 by requiring the:

- Commission to adopt, by rule, a list of pollution control property which must include the 18 categories of equipment outlined in HB 3732;

---

[1] See TEX. TAX CODE § 11.31 and 30 TEX. ADMIN. CODE § 17.25.
[2] TEX. CONST. art. 8, § 1-l(a) (November 2, 2002).
[3] TEX. TAX CODE § 11.31(c) & (d).
[4] TEX. TAX CODE § 11.31(i).
[5] See TEX. TAX CODE § 11.31(e).
[6] TEX. TAX CODE § 11.31(g).
[7] House Bill 3732 (80th Legislature, 2007).

- Commission to adopt a procedure to review the list at least once every three years and allows the removal of items from the list when there is compelling evidence that the item does not provide pollution control; and

- Executive Director to review applications containing only items on the adopted list, and to issue a determination without regard to the information provided in response to Section 11.31(c)(1) within 30 days of receipt of the required application documents.[8]

On January 16, 2008, the Commission adopted rules implementing HB 3732.[9] The adopted rules include the "Equipment and Categories List" (ECL).[10] Part B of the ECL consists of the 18 categories of equipment listed by the legislature in HB 3732.[11] The rules revised the review standards contained in Section 17.15 by creating a revised "Decision Flow Chart" and adopting a new "Part B Decision Flow Chart."[12] The rules created a new Tier level of application (Tier IV) for the categories of equipment contained in Part B of the ECL.[13] The use determinations subject to these appeals were filed as Tier IV applications under the newly adopted rules.

Appeals under 30 TEX. ADMIN. CODE § 17.25 may be filed by either the applicant seeking the determination, or by the chief appraiser of the tax appraisal district affected by the determination.[14] The appeal must be in writing and filed within 20 days of receipt of the use determination letter.[15] The Applicant is presumed to have received notice of the determination on the "third regular business day after the date the notice of the Executive Director's action is mailed by first class mail."[16] The appellant is required by Section 17.25(b)(5) to explain the basis for the appeal. Under Section 11.31(i), "the chief appraiser shall accept a final determination by the executive director as conclusive evidence that the facility, device, or method is used wholly or partly as pollution control property."

II.

PROCEDURAL BACKGROUND

Tenaska Gateway Partners, Ltd – Rusk County (Use Determination Number 07-11914)

On March 14, 2008, Tenaska filed a Tier IV application with the Executive Director seeking a use determination under Section 11.31 of the Texas Tax Code for 3 Heat Recovery Steam Generators (HRSG) and 1 enhanced steam turbine. Tenaska claimed the devices were installed to control Nitrogen Oxides (NO_x) and cited 40 C.F.R § 60.44Da and 30 TEX. ADMIN. CODE § 117.3010 as the rules it is meeting or exceeding by installing the devices. The application was

[8] Id. See also, 33 Tex.Reg 932, 933 (February 1, 2008).
[9] 33 Tex.Reg 932 (February 1, 2008). The rules became effective on February 7, 2008.
[10] 33 Tex.Reg at 956; and 30 TEX.ADMIN. CODE 17.14(a) (Effective February 7, 2008). Unless otherwise specifically stated, all references to 30 TAC Chapter 17 refer to the rules effective February 7, 2008.
[11] 33 Tex.Reg at 967; and 30 TEX.ADMIN. CODE 17.14(a).
[12] 30 TEX.ADMIN. CODE 17.15(a) and (b).
[13] 30 TEX.ADMIN. CODE 17.2(16).
[14] TEX. TAX CODE § 11.31(e); and 30 TEX. ADMIN. CODE § 17.25(a)(2).
[15] 30 TEX. ADMIN. CODE § 17.25(b)
[16] Id.

declared to be administratively complete on April 8, 2008. The technical review of the application was completed on May 1, 2008. On May 1, 2008, the Executive Director issued a 100% positive use determination for the HRSGs and a negative use determination for the enhanced steam turbine. Rusk County Appraisal District filed a timely appeal on May 19, 2008. On May 27, 2008, Wayne Frazell (with Pritchard & Abbott, Inc.) filed "detailed comments" on behalf of Rusk County Appraisal District, explaining its reasons for appeal. A copy of the application, administrative review documents, technical review documents, and use determination letter are attached herein as **ED's Exhibit 1**.

Freestone Power Generation L.P – Freestone County (Use Determination Number 07-11966)

On March 28, 2008, Freestone filed a Tier IV application with the Executive Director seeking a use determination under Section 11.31 of the Texas Tax Code for 4 HRSGs, 2 steam turbines, and support systems. Freestone claimed the devices were installed to control Nitrogen Oxides (NO_x) and cited 40 C.F.R § 60.44Da and 30 TEX. ADMIN. CODE § 106.512 as the rules it is meeting or exceeding by installing the devices. The application was declared to be administratively complete on April 8, 2008. The technical review of the application was completed on May 1, 2008. On May 1, 2008, the Executive Director issued a 100% positive use determination for the HRSGs and a negative use determination for the steam turbines, and support systems. Freestone Central Appraisal District filed a timely appeal on May 16, 2008. On May 27, 2008, Wayne Frazell (with Pritchard & Abbott, Inc.) filed "detailed comments" on behalf of Freestone County Appraisal District explaining the its reasons for appeal. A copy of the application, administrative review documents, technical review documents, and use determination letter are attached herein as **ED's Exhibit 2**.

Borger Energy Associates, LP – Hutchinson County (Use Determination Number 07-11971)

On March 31, 2008, Borger filed a Tier IV application with the Executive Director seeking a use determination under Section 11.31 of the Texas Tax Code for 2 HRSGs. Borger claimed the devices were installed to control Nitrogen Oxides (NO_x) and cited 40 C.F.R § 60.44Da and 30 TEX. ADMIN. CODE § 106.512 as the rules it is meeting or exceeding by installing the devices. The application was declared to be administratively complete on April 8, 2008. The technical review of the application was completed on May 1, 2008. On May 1, 2008, the Executive Director issued a 100% positive use determination for the HRSGs. Hutchinson County Appraisal District filed a timely appeal on May 16, 2008. On May 27, 2008, Wayne Frazell (with Pritchard & Abbott, Inc.) filed "detailed comments" on behalf of Hutchinson County Appraisal District explaining the its reasons for appeal. A copy of the application, administrative review documents, technical review documents, and use determination letter are attached herein as **ED's Exhibit 3**.

Brazos Valley Energy L.P – Fort Bend County (Use Determination Number 0711969)

On March 28, 2008, Brazos filed a Tier IV application with the Executive Director seeking a use determination under Section 11.31 of the Texas Tax Code for 2 HRSGs and 1 steam turbine. Brazos claimed the devices were installed to control Nitrogen Oxides (NO_x) and cited 40 C.F.R §

60.44Da and 30 TEX. ADMIN. CODE § 106.512 as the rules it is meeting or exceeding by installing the devices. The application was declared to be administratively complete on April 8, 2008. The technical review of the application was completed on May 1, 2008. On May 1, 2008, the Executive Director issued a 100% positive use determination for the HRSGs and a negative use determination for the steam turbine. Fort Bend Central Appraisal District filed a timely appeal on May 21, 2008. A copy of the application, administrative review documents, technical review documents, and use determination letter are attached herein as **ED's Exhibit 4**.

Freeport Energy Center, L.P – Brazoria County (Use Determination Number 07-11994)

On April 3, 2008, Freeport filed a Tier IV application with the Executive Director seeking a partial use determination under Section 11.31 of the Texas Tax Code for 1 HRSG, 1 steam turbine, and condenser and ancillary pump systems. Freeport claimed the devices were installed to control Nitrogen Oxides (NO_x) and cited 40 C.F.R § 60.44Da as the rule it is meeting or exceeding by installing the devices. The application was declared to be administratively complete on April 8, 2008. The technical review of the application was completed on May 1, 2008. On May 1, 2008, the Executive Director issued a 100% positive use determination for the HRSG and a negative use determination for the steam turbine, and condenser and ancillary pump systems. Brazoria County Appraisal District filed a timely appeal on May 21, 2008. A copy of the application, administrative review documents, technical review documents, and use determination letter are attached herein as **ED's Exhibit 5**.

Navasota Wharton Energy Partners, LP – Wharton County (Use Determination Number 07-11926)

On March 19, 2008, Navasota filed a Tier IV application with the Executive Director seeking a use determination under Section 11.31 of the Texas Tax Code for 4 HRSGs and 2 steam turbines. Navasota claimed the devices were installed to control Nitrogen Oxides (NO_x) and cited 40 C.F.R § 60.44Da and 30 TEX. ADMIN. CODE § 106.512 as the rules it is meeting or exceeding by installing the devices. The application was declared to be administratively complete on April 8, 2008. The technical review of the application was completed on May 1, 2008. On May 1, 2008, the Executive Director granted a 100% positive use determination for the HRSGs and a negative use determination for the steam turbines. Wharton County Appraisal District filed a timely appeal on May 21, 2008. A copy of the application, administrative review documents, technical review documents, and use determination letter are attached herein as **ED's Exhibit 6**.

III.

HRSGs and CALCULATION OF POLLUTION CONTROL PERCENTAGE

The properties involved in these appeals are HRSGs and steam turbines used at combined-cycle facilities to generate electricity. The Tier IV applications were submitted under Part B-8 of the ECL for HRSGs and Part B-10 of the ECL for steam turbines. The appeals challenge only the Executive Director's determinations granting 100% Tier IV positive use determinations for the HRSGs. The Executive Director's determinations regarding the steam turbines were not appealed.

Since the enactment of HB 3732, the Executive Director has received approximately thirty seven Tier IV use determination applications for HRSGs and steam turbines installed at combined-cycle electric generation facilities. The Executive Director has issued 100% positive use determinations for twenty six HRSGs. Six out of the twenty six use determinations were appealed by the affected appraisal districts, and all six are the subject of the instant appeals. There are currently eleven applications awaiting determinations.

Under TCEQ rules, an applicant for a Tier IV use determination is required to calculate the use determination for the equipment or categories of equipment included in the application. "It is the responsibility of the applicant to propose a reasonable method for determining the use determination percentage. It is the responsibility of the executive director to review the proposed method and make the final determination."[17] The challenge with most Tier IV applications including those involved in these appeals is the calculation of the use determination percentage for each category of equipment. A description of the functions performed by a HRSG will help explain why the calculation methodologies vary from one application to another.

A HRSG acts as a fuel substitute in a typical combined-cycle installation. A typical HRSG captures hot exhaust gases from a combustion turbine. The resulting heat is converted "into high pressure and temperature steam" which is used to propel a steam turbine to generate electrical energy.[18] This process eliminates the need for the additional burning of coal or other hydrocarbon based fuel in order to obtain the same increase in electrical energy generation output at the site. Installation of a HRSG in a combined-cycle facility "allows more electrical energy to be produced for a given heat input" compared to a "simple cycle or traditional steam boiler/turbine (Rankine cycle) configuration."[19]

Calculation Methodologies Provided in the Respective Applications:

Tenaska Gateway: Tenaska proposed a calculation based on comparing a single cycle plant with a selective catalytic reduction (SCR) system installed to control NO_x to a combined-cycle plant with an HRSG installed to boost efficiency with less NO_x emissions. Based on this premise, Tenaska claimed that it merely substituted a HRSG in a combined-cycle plant for an SCR in a single cycle plant. As a result, Tenaska wanted a use determination percentage that reflected the total capital cost of the hypothetical SCR that it did not install. The arithmetic and method of calculation is best expressed on pages 5-6 of the application.[20]

---

[17] 30 TEX. ADMIN. CODE § 17.17(d).

[18] Yongjun Zhao, Hongmei Chen, Mark Waters, and Dimitri N. Mavris; "Modeling and Cost Optimization of Combined Cycle Heat Recovery Generator Systems" (Proceedings of ASME Turbo Expo 2003 - Power of Land, Sea, and Air, GT2003-38568, June 16-19, 2003). See also, Application for Use Determinations filed by Ennis-Tractebel Power Company, LP).

[19] Id. A single-cycle or simple-cycle power plant uses a "fuel-fired turbine" to generate electricity. A combined-cycle power plant combines "gas turbine engine" with a heat recovery steam generator and a steam turbine system to generate electricity. Single-cycle facilities are only able to utilize a portion of the heat that the combustion of their fuel generates. The excess heat generated from combustion is generally wasted in a single cycle facility. The HRSGs at combined-cycle facilities recapture that waste heat, and use it to make steam to generate electricity; thereby, improving overall efficiency. See Footnote 18 ("Modeling and Cost Optimization of Combined Cycle Heat Recovery Generator Systems").

[20] See ED's Exhibit 1 (Application for Tier IV use determination submitted by Tenaska Gateway Partners, Ltd.).

The problems with this calculation are as follows. First, the cost of the steam turbine which is not a pollution control property was factored into the calculation. Second, HRSGs and SCRs are totally different mechanisms. The latter is a known and acceptable pollution control device, which may still be installed somewhere in the plant to control pollution. Once installed, Tenaska can apply and receive a use determination for it. Third, SCRs are custom-built for each facility. Choosing and using an average cost, as Tenaska did, does not come close to reflecting the actual value of a SCR that would be installed if there was a need to install one. Fourth, the calculation removes the focus of the evaluation from the purported pollution control property, and places it on another unrelated property. The calculation is not based on the equipment for which use determination is sought. Finally, it is impossible to apply the review standards, particularly the Decision Flow Charts, using this calculation methodology.

Freeport Energy: Freeport requested a 98% partial use determination for replacing an old power generation plant with a combined-cycle plant using an HRSG. Freeport based its proposed calculation on the NO_x reduction achieved by the new plant. Freeport claimed that NO_x emissions were reduced from 147ppm (old plant) to 3ppm (new plant). The partial percentage calculation based on reduction in NO_x emissions was 98% of the total cost of installation of the HRSG, steam turbine, and condenser and ancillary pump system. The method of calculation is best expressed on pages 5-6 of the application.[21]

The problems with this calculation are as follows. First, the cost of the steam turbine, condenser and ancillary pump system which are not pollution control properties are factored into the calculation. Second, the calculation removes the focus of the evaluation from the purported pollution control equipment, and places it on NO_x emissions. The calculation is not based on the equipment for which use determination is sought. Third, the calculation is based on the cost of the entire facility rather than the cost of the HRSG. Finally, it is impossible to apply the review standards, particularly the Decision Flow Charts, using this calculation methodology.

Freestone Power Generation: Freestone proposed a use determination percentage calculation based on "avoided emissions." This "approach relies on thermal output differences between a conventional power generation system and the combined-cycle system."[22] This approach "utilized output-based NO_x allocation method for both power generation projects."[23] The method of calculation is best expressed on Schedule A, and pages 11-12 of the application.[24]

The problems with this calculation are as follows. First, the cost of the entire facility was used in the calculation. Second, the cost of the steam turbines and supporting systems which are not pollution control properties are factored into the calculation. Third, the calculation removes the focus of the evaluation from the purported pollution control property and places it on NO_x emissions output. The calculation is not based on the devices for which use determinations are sought. Fourth, the calculation is based on several assumptions, none of which reflect the pollution control properties at issue in this case. Finally, it is impossible to apply the review

[21] See ED's Exhibit 5 (Application for Tier IV use determination submitted by Freeport Energy Center, L.P.).
[22] See ED's Exhibit 2 (Application for Tier IV use determination submitted by Freestone Power Generation, L.P.).
[23] Id.
[24] Id.

standards, particularly the Decision Flow Charts, using this calculation methodology. Finally, as a result of the flawed assumptions, the use of the total cost of the facility, and the use of the total cost of the HRSGs and steam turbines, the applicant came up with a pollution control percentage of 384%.

Borger Energy: Like Freestone, Borger proposed a use determination percentage calculation based on "avoided emissions." This "approach relies on thermal output differences between a conventional power generation system and the combined-cycle system."[25] The approach "utilized output-based NO_x allocation method for both power generation projects."[26] The method of calculation is best expressed on Schedule A, and pages 7-9 of the application.[27]

The problems with this calculation are as follows. First, the cost of the entire facility was used in the calculation. Second, the calculation removes the focus of the evaluation from the purported pollution control properties and places it on NO_x emissions output. The calculation is not based on the devices for which use determinations are sought. Third, the calculation is based on several assumptions, none of which reflect the pollution control properties at issue in this case. Fourth, it is impossible to apply the review standards, particularly the Decision Flow Charts, using this calculation methodology. Finally, as a result of the flawed assumptions and the use of the total cost of the facility, the applicant came up with a pollution control percentage of 128.6%.

Brazos Valley Energy: Brazos proposed a pollution control percentage calculation based on "avoided emissions." This "approach relies on thermal output differences between a conventional power generation system and the combined-cycle system."[28] The approach "utilized output-based NOx allocation method for both power generation projects."[29] The method of calculation is best expressed on Schedule A, and pages 9-10 of the application.[30]

The problems with this calculation are as follows. First, the cost of the entire facility was used in the calculation. Second, the cost of the steam turbines and supporting systems which are not pollution control devices are factored into the calculation. Third, the calculation removes the focus of the evaluation from the purported pollution control properties and places it on NOx emissions output. The calculation is not based on the devices for which use determinations are sought. Fourth, the calculation is based on several assumptions, none of which reflects the pollution control properties at issue in this case. Fifth, it is impossible to apply the review standards, particularly the Decision Flow Charts, using this calculation methodology. Finally, as a result of the flawed assumptions, the use of the total cost of the facility, and the use of the total cost of the HRSGs and steam turbine, the applicant came up with a pollution control percentage of 248.7%.

Navasota Energy: Navasota proposed a pollution control percentage calculation based on "avoided emissions." This "approach relies on thermal output differences between a

[25] See ED's Exhibit 3 (Application for Tier IV use determination submitted by Borger Energy Associates, LP.).
[26] Id.
[27] Id.
[28] See ED's Exhibit 4 (Application for Tier IV use determination submitted by Brazos Valley Energy, L.P.).
[29] Id.
[30] Id.

conventional power generation system and the combined-cycle system."[31] The approach "utilized output-based NO_x allocation method for both power generation projects."[32] The method of calculation is best expressed on Schedule A, and pages 9-10 of the application.[33]

The problems with this calculation are as follows. First, the cost of the entire facility was used in the calculation. Second, the cost of the steam turbines and supporting systems which are not pollution control devices are factored into the calculation. Third, the calculation removes the focus of the evaluation from the purported pollution control properties and places it on NO_x emissions output. The calculation is not based on the devices for which use determinations are sought. Fourth, the calculation is based on several assumptions, none of which reflects the pollution control properties at issue in this case. Fifth, it is impossible to apply the review standards, particularly the Decision Flow Charts, using this calculation methodology. Finally, as a result of the flawed assumptions, the use of the total cost of the facility, and the use of the total cost of the HRSGs and steam turbine, the applicant came up with a pollution control percentage of 164%.

The pollution control percentages and the methods of calculation used by the applicants vary considerably. The following are examples of the percentages derived by using the avoided emissions calculation:

Applicant	Calculation Method	Pollution Control %
Channel Energy	Avoided emission based on No_x Output	366.1%
Pasadena Cogeneration	Avoided emission based on No_x Output	165%
TH Wharton	Avoided emission based on No_x Output	398.3%
Cedar Bayou 4	Avoided emission based on No_x Output	225.9%
Mustang Units 1, 2, &3	Avoided emission based on No_x Output	142.18%
Calpine Baytown	Avoided emission based on No_x Output	298.75%
Deer Park Energy	Avoided emission based on No_x Output	503.55%
Magic Valley	Avoided emission based on No_x Output	263.55%
FPL Forney	Avoided emission based on No_x Output	213.64%

Based on various calculations and initial research by staff, the Executive Director allowed 100% positive use determination for the first set of applications adjudicated. Subsequently, the Executive Director received new applications, with varying use determination percentages. The Executive Director then decided to develop a consistent and uniform use determination percentage for HRSGs.

[31] See ED's Exhibit 6 (Application for Tier IV use determination submitted by Navasota Wharton Energy Partners, LP.).
[32] Id.
[33] Id.

IV.

THE WORKGROUP AND EXECUTIVE DIRECTOR'S RECOMMENDATION

Faced with the difficulties of coming up with a reasonable use determination percentage for HRSGs, the Executive Director assembled a Workgroup to gather information that would lead to the development of a uniform use determination percentage for the equipment. The Workgroup was attended by applicants or their representatives whose use determinations are currently pending on appeal; applicants or their representatives whose use determination applications are currently pending in-house; appraisal districts and their representatives; and environmental and public interest groups. The Workgroup met twice and provided input to the Executive Director on this issue. Based on staff research and input from the Workgroup, the following conclusions were made:

1. A comparable combined cycle power plant produces less air emissions than the same size simple cycle power plant. The reduced emissions are attributed to reduced combustion. The installation of the HRSGs lead to the reduced emissions.

2. The steam turbine systems are used solely to produce electricity. As 100% production equipment the steam turbine systems are not eligible for a positive use determination.

3. The pollution control aspect of the combined cycle plant relates solely to the installation of the HRSGs. However, installation of HRSG also results in increased efficiency and production gain.

The Executive Director reviewed several calculation methodologies provided in different applications and at the Workgroup meetings; calculations provided by Wayne Frazell, with Pritchard & Abbott; and comments and suggestions made by Workgroup participants. The goal was to assign an appropriate percentage to the pollution control aspect of the HRSGs, while taking into account the production gain associated with their installation. Of all the calculations reviewed, the method furnished by Cummings Westlake, LLC, representing Ennis-Tractebel Power Company, comes the closest to providing the appropriate use determination percentage for HRSGs.

The Executive Director is therefore recommending the following modified version of the calculation presented by Cummings Westlake:

> A HRSG acts as a fuel substitute in a combined cycle installation. A typical HRSG captures hot exhaust gases from a combustion turbine. The resulting heat is converted "into high pressure and temperature steam" which is used to propel a steam turbine to generate electrical energy.[34] This process eliminates the need for the additional burning of coal or other hydrocarbon based fuel in order to obtain

[34] Yongjun Zhao, Hongmei Chen, Mark Waters, and Dimitri N. Mavris; "Modeling and Cost Optimization of Combined Cycle Heat Recovery Generator Systems" (Proceedings of ASME Turbo Expo 2003 - Power of Land, Sea, and Air, GT2003-38568, June 16-19, 2003). See also, Application for Use Determinations filed by Ennis-Tractebel Power Company, LP).

the same increase in electrical energy generation output at the site. Installation of a HRSG in a combined cycle facility "allows more electrical energy to be produced for a given heat input" compared to a "simple cycle or traditional steam boiler/turbine (Rankine cycle) configuration."[35] The thermal efficiency increase or production gain derived from the installation of a HRSG is approximately 39%. Since this percentage represents the additional amount of electrical energy produced for a given heat input, it therefore represents the production value of the equipment. Based on this production value, the pollution control percentage of a HRSG installed at a combined-cycle facility is 61%. **Staff is therefore recommending a positive use determination of 61% for the installation of a HRSG in a combined cycle facility.**

Under this method, a HRSG would exit the "Decision Flow Chart" at box 7 and requires the application of "Part B Decision Flow Chart."[36] HRSG provides environmental benefit at the site under box 2 of the Part B Decision Flow Chart by acting as fuel substitute, capturing exhaust gases which would have been emitted into the air at the site, and eliminates the need for the additional burning of hydrocarbon-based fuel to obtain the same increase in electrical energy generation at the site. The HRSGs involved in the instant appeals were installed in order to meet or exceed an environmental rule adopted to control NO_x emissions.[37]

V.

CONCLUSION

The Executive Director requests that the Commission adopt the recommendation of the Executive Director on the proper pollution control percentage for HRSGs installed at combined-cycle facilities. Should the Commission choose to adopt the Executive Director's recommendation, the Executive Director intends to apply the adopted recommendation to all subsequently filed similar use determination applications, and to those applications currently pending adjudication.

[35] Id.
[36] 30 TEX. ADMIN. CODE § 17.15(a); and 30 TEX. ADMIN. CODE § 17.15(b).
[37] See 40 C.F.R § 60.44Da; and 30 TEX. ADMIN. CODE § 106.512.

The Executive Director respectfully requests that the Commission remand use determination numbers 07-1194, 07-11966, 07-11971, 07-11969, 07-11994, and 07-11926, to the Executive Director to issue revised use determinations consistent with the adopted recommendation.

Respectfully submitted,

TEXAS COMMISSION ON ENVIRONMENTAL QUALAITY

Mark R. Vickery, P.G., Executive Director

Stephanie Bergeron Perdue,
Deputy Director Office of Legal Services

Robert Martinez, Director
Environmental Law Division

D. A. Chris Ekoh, Staff Attorney
Environmental Law Division
Texas Bar No. 06507015

Timothy Reidy, Staff Attorney
Environmental Law Division
Texas Bar No. 24058069

P.O. Box 13087, MC 173
Austin, Texas 78711-3087
Telephone No. (512) 239-5487
Facsimile No. (512) 239-0606
REPRESENTING THE EXECUTIVE DIRECTOR,
TEXAS COMMISSION ON ENVIRONMENTAL QUALITY

CERTIFICATE OF SERVICE

I certify that on December 3, 2008, the original and 7 copies of the Executive Director's Response to Rusk County, Freestone Central, Hutchinson County, Fort Bend Central, Brazoria County, and Wharton County Appraisal Districts' Appeals of the Executive Director's use determinations was filed with the Office of the Chief Clerk, Texas Commission on Environmental Quality, and was served by first-class mail, agency mail, or facsimile to all persons on the attached mailing list.

D. A. Chris Ekoh, Staff Attorney
Environmental Law Division
Texas Commission on Environmental Quality

MAILING LIST
TCEQ Docket Numbers
2008-0830-MIS-U (UD 07-11914/Tenaska Gateway Partners, Ltd – Rusk County)
2008-0831-MIS-U (UD 07-11966/Freestone Power Generation, L.P. – Freestone County)
2008-0832-MIS-U (UD 07-11971/Borger Energy Associates, LP – Hutchinson County)
2008-0849-MIS-U (UD 07-11969/Brazos Valley Energy, L.P. – Fort Bend County)
2008-0850-MIS-U (UD 07-11994/Freeport Energy Center, L.P. – Brazoria County)
2008-0851-MIS-U (UD 07-11926/Navasota Wharton Energy Partners, LP – Wharton County)

Terry W. Decker, RPA/CCA/RTA
Chief Appraiser
Rusk County Appraisal District
P. O. Box 7
Henderson, Texas 75653-0007
903/657-3578 Fax 903/657-9073

David Johnson
Tenaska, Inc.
1044 N. 115th St., Suite 400
Omaha, Nebraska 68154-4446

Bud Black, RPA/CTA
Chief Appraiser
Freestone Central Appraisal District
218 North Mount
Fairfield, Texas 75840
903/389-5510 Fax 903/389-5955

Freestone Power Generation L.P.
717 Texas, Suite 1000
Houston, Texas 77002

Greg Maxim
Duff & Phelps LLC
919 Congress Ave., Suite 1450
Austin, Texas 78701
512/671-5580 Fax 512/671-5501

Pritchard & Abbott, Inc.
Attn: Mr. C. Wayne Frazell
4900 Overton Commons Court
Fort Worth, Texas 76132-3687
817/926-7861 Fax 817/927-5314

Diana Hooks, RPA/RTA
Chief Appraiser
Hutchinson County Appraisal District
P. O. Box 5065
Borger, Texas 79008-5065
806/274-2294 Fax 806/273-3400

Borger Energy Associates, LP
7001 Boulevard 26, Suite 310
North Richland Hills, Texas 76180

Dennis Deegear
Duff & Phelps LLC
919 Congress Ave., Suite 1450
Austin, Texas 78701
512/671-5523 Fax 512/671-5501

Glen Whitehead, RPA
Chief Appraiser
Fort Bend County Central Appraisal District
2801 B. F. Terry Blvd.
Rosenberg, Texas 77471-5600
281/344-8623 Fax 281/344-8632

Brazos Valley Energy, L.P.
717 Texas, Suite 1000
Houston, Texas 77002

Hugh L. Landrum & Associates
Attn: Mr. Hugh L. Lundrum, Jr.
12621 Featherwood, Suite 325
Houston, Texas 77034
281/484-7000 Fax 281/484-7272

Cheryl Evans
Chief Appraiser
Brazoria County Appraisal District
500 North Chenango
Angleton, Texas 77515
979/849-7792 Fax 979/849-7984

Freeport Energy Center, LP
4100 Underwood Road
Pasadena, Texas 77507

Justin Hyland
Leo Scherrer
Calpine/Dow
717 Texas Ave.
Houston, Texas 77002
713/830-8873 Fax 713/830-8670

Tylene Gamble
Chief Appraiser
Wharton County Appraisal District
2407½ N. Richmond Road
Wharton, Texas 77488
979/532-8931 Fax 979/532-5691

Navasota Wharton Energy Partners, LP
403 Corporate Woods
Magnolia, Texas 77354

Stephanie Bergeron Perdue
Deputy Director
TCEQ Office of Legal Services (MC 173)
P. O. Box 13087
Austin, Texas 78711-3087
512/239-0600 Fax 512/239-0606

D. A. Chris Ekoh
TCEQ Environmental Law Division (MC 173)
P. O. Box 13087
Austin, Texas 78711-3087
512/239-5487 Fax 512/239-0606

Tim Reidy
TCEQ Environmental Law Division (MC 173)
P. O. Box 13087
Austin, Texas 78711-3087
512/239-5487 Fax 512/239-0606

Ron Hatlett
TCEQ SBEA (MC 110)
P. O. Box 13087
Austin, Texas 78711-3087
512/239-3100 Fax 512/239-3165

Blas Coy
TCEQ Office of Public Interest Counsel (MC 103)
P. O. Box 13087
Austin, Texas 78711-3087
512/239-6363 Fax 512/239-6377

Docket Clerk
TCEQ Office of the Chief Clerk (MC 105)
P. O. Box 13087
Austin, Texas 78711-3087
512/239-3300 Fax 512/239-3311

Bridget Bohac
TCEQ Office of Public Assistance (MC 108)
P. O. Box 13087
Austin, Texas 78711-3087
512/239-4000 Fax 512/239-4007

Minor Hibbs
TCEQ Chief Engineers Office (MC 168)
P.O. Box 13087
Austin, Texas 78711-3087
512/239-1795 Fax 512/239-1794

Protecting Texas by Reducing and Preventing Pollution

FAX TRANSMITTAL

DATE: February 13, 2009 NUMBER OF PAGES *(including this cover sheet)*: 5

TO: Name (See Below)

Organization

FAX Number

FROM: TEXAS COMMISSION ON ENVIRONMENTAL QUALITY

Name Les Trobman, General Counsel

Division/Region Office of the General Counsel

Telephone Number 512/239-5500

FAX Number 512/239-5533

NOTES:

Diana Hooks	Hutchinson County Appraisal District	806/273-3400
Glen Whitehead	Fort Bend County Appraisal District	281/344-8632
Cheryl Evans	Brazoria County Appraisal District	979/849-7984
Bud Black	Freestone Central Appraisal District	903/389-5955
Tylene Gamble	Wharton County Appraisal District	979/532-5691
Terry W. Decker	Rusk County Appraisal District	903/657-9073
Dennis Deegear	Duff and Phelps LLC	512/671-5501
C. Wayne Frazell	Pritchard & Abbott, Inc.	817/927-5314
Greg Maxim	Duff and Phelps LLC	512/671-5501
Hugh L. Landrum Jr.	Hugh L. Landrum & Associates, Inc.	281/484-7272
Justin Hyland	Calpine Corporation	832/325-0934
David D. Johnson	Tenaska, Inc.	402/691-9526

Jerry K. Crouse	Tenaska Gateway Partners, Ltd.	402/691-9526
Stephanie Bergeron Perdue	TCEQ Environmental Law Division	512/239-0606
Ron Hatlett	TCEQ Small Business & Environmental Assistance Division	512/239-5678
Blas Coy	TCEQ Office of Public Interest Counsel	512/239-6377
Docket Clerk	TCEQ Office of Chief Clerk	512/239-3311
Bridget Bohac	TCEQ Office of Public Assistance	512/239-4007

Buddy Garcia, *Chairman*
Larry R. Soward, *Commissioner*
Bryan W. Shaw, Ph.D., *Commissioner*
Mark R. Vickery, P.G., *Executive Director*

TEXAS COMMISSION ON ENVIRONMENTAL QUALITY

Protecting Texas by Reducing and Preventing Pollution

February 13, 2009

To: Persons on the Attached Mailing List (by mail and facsimile as indicated)

Re: Appeals of the Executive Director's Use Determinations regarding Tenaska Gateway Partners, Ltd. (Rusk County), Freestone Power Generation LP (Freestone County), Borger Energy Associates, LP (Hutchinson County), Brazos Valley Energy L.P. (Fort Bend County), Freeport Energy Center, L.P. (Brazoria County), and Navasota Wharton Energy Partners LP (Wharton County), TCEQ Use Determination Nos. 07-11914, 07-11966, 07-11971, 07-11969, 07-11994 and 07-11926; TCEQ Docket Nos. 2008-0830-MIS-U, 2008-0831-MIS-U, 2008-0832-MIS-U, 2008-0849-MIS-U, 2008-0850-MIS-U, and 2008-0851-MIS-U

This letter is to notify you that the Texas Commission on Environmental Quality (Commission) will consider the above-described 6 appeals and all related filings during the Commission's public meeting scheduled to begin at **9:30 A.M. on Wednesday, February 25, 2009.**

During the public meeting, the Appraisal Districts for Rusk, Freestone, Hutchinson, Fort Bend, Brazoria, and Wharton Counties (Appraisal Districts) or their representative(s), may speak first and save part of their time for rebuttal since the Appraisal Districts have filed the appeals at issue here. The Appraisal Districts have 3 minutes each for their oral presentations, including the time for rebuttal argument. Tenaska Gateway Partners, Ltd., Freestone Power Generation LP, Borger Energy Associates, LP, Brazos Valley Energy L.P., Freeport Energy Center, L.P., and Navasota Wharton Energy Partners LP (Applicants) may speak next and have 3 minutes each for their oral presentations. If any parties share a representative, their allotted time may be combined as appropriate. The Applicants will be followed by the Executive Director and the Office of Public Interest Counsel. The Executive Director and the Office of Public Interest Counsel each have a total time of 5 minutes for their oral presentations.

If you have any questions about the public meeting or related matters, please contact John Sedberry at (512) 239-6575.

Very truly yours,

Les Trobman
General Counsel

Mailing List

Mailing List

Tenaska Gateway Partners, Ltd. (Rusk County), Freestone Power Generation LP (Freestone County), Borger Energy Associates, LP (Hutchinson County), Brazos Valley Energy L.P. (Fort Bend County), Freeport Energy Center, L.P. (Brazoria County), and Navasota Wharton Energy Partners LP (Wharton County)
TCEQ Docket Nos. 2008-0830-MIS-U, 2008-0831-MIS-U, 2008-0832-MIS-U, 2008-0849-MIS-U, 2008-0850-MIS-U, and 2008-0851-MIS-U

Diana Hooks, RPA/RTA
Chief Appraiser
Hutchinson County Appraisal District
P.O. Box 5065
Borger, Texas 79008-5065
806/274-2294 FAX806/273-3400

Borger Energy Associates, LP
7001 Boulevard 26, Suite 310
North Richland Hills, Texas 76180

Dennis Deegear
Duff and Phelps LLC
919 Congress Ave., Suite 1450
Austin, Texas 78701
512/671-5523 FAX 512/671-5501

Pritchard & Abbott, Inc.
Attn: Mr. C. Wayne Frazell
4900 Overton Commons Court
Fort Worth, Texas 76132-3687
817/926-7861 FAX 817/927-5314

Glen Whitehead, RPA
Chief Appraiser
Fort Bend County Appraisal District
2801 B. F. Terry Blvd.
Rosenberg, Texas 77471-5600
281/344-8623 FAX 281/344-8632

Brazos Valley Energy L.P.
717 Texas, Suite 1000
Houston, Texas 77002

Greg Maxim
Duff and Phelps LLC
919 Congress Ave., Suite 1450
Austin, Texas 78701
512/671-5580 FAX 512/671-5501

Hugh L. Landrum & Associates, Inc.
Attn: Mr. Hugh L. Landrum Jr.
12621 Featherwood Drive, Suite 325
Houston, Texas 77034
281/484-7000 FAX 281/484-7272

Cheryl Evans
Chief Appraiser
Brazoria County Appraisal District
500 North Chenango
Angleton, Texas 77515
979/849-7792 FAX 979/849-7984

Freeport Energy Center, LP
4100 Underwood Road
Pasedena, Texas 77507

Justin Hyland
Leo Scherrer
Calpine Corporation/Dow
717 Texas Ave. Suite 1000
Houston, Texas 77002
713/830-8873 FAX 832/325-0934

Bud Black, RPA/CTA
Chief Appraiser
Freestone Central Appraisal District
218 North Mount
Fairfield, Texas 75840
903/389-5510 FAX 903/389-5955

Freestone Power Generation L.P.
717 Texas, Suite 1000
Houston, Texas 77002

Tylene Gamble
Chief Appraiser
Wharton County Appraisal District
2407 ½ N. Richmond Road
Wharton, Texas 77488
979/532-8931 FAX 979/532-5691

Navasota Wharton Energy Partners LP
403 Corporate Woods
Magnolia, Texas 77354

Terry W. Decker, RPA/CCA/RTA
Chief Appraiser
Rusk County Appraisal District
P.O. Box 7
Henderson, Texas 75653-0007
903/657-3578 FAX 903/657-9073

David D. Johnson
Tenaska, Inc.
1044 N. 115th St., Suite 400
Omaha, Nebraska 68154-4446
402/691-9500 FAX 402/691-9526

Tenaska Gateway Partners, Ltd.
Attn: Mr. Jerry K. Crouse, CFO
1044 N. 115th St., Suite 400
Omaha, Nebraska 68154-4446
402/691-9500 FAX 402/691-9526

Stephanie Bergeron Perdue
TCEQ Environmental Law Division MC 173
P.O. Box 13087
Austin, Texas 78711-3087
512/239-0600 FAX 512/239-0606

Chris Ekoh
TCEQ Environmental Law Division MC 173
P.O. Box 13087
Austin, Texas 78711-3087
512/239-0600 FAX 512/239-0606

Ron Hatlett
TCEQ Small Business & Environmental
Assistance Division MC 110
P.O. Box 13087
Austin, Texas 78711-3087
512/239-3100 FAX 512/239-5675

Blas Coy
TCEQ Office of Public Interest Counsel
MC 103
P.O. Box 13087
Austin, Texas 78711-3087
512/239-6363 FAX 512/239-6377

Docket Clerk
TCEQ Office of Chief Clerk MC 105
P.O. Box 13087
Austin, Texas 78711-3087
512/239-3300 FAX 512/239-3311

Bridget Bohac
TCEQ Office of Public Assistance MC 108
P.O. Box 13087
Austin, Texas 78711-3087
512/239-4000 FAX 512/239-4007

Protecting Texas by Reducing and Preventing Pollution

FAX TRANSMITTAL

DATE: February 23, 2009 NUMBER OF PAGES *(including this cover sheet)*: 4

TO:
Name (See Below)
Organization
FAX Number

FROM: TEXAS COMMISSION ON ENVIRONMENTAL QUALITY
Name Les Trobman, General Counsel
Division/Region Office of the General Counsel
Telephone Number 512/239-5500
FAX Number 512/239-5533

NOTES:

Diana Hooks	Hutchinson County Appraisal District	806/273-3400
Glen Whitehead	Fort Bend County Appraisal District	281/344-8632
Cheryl Evans	Brazoria County Appraisal District	979/849-7984
Bud Black	Freestone Central Appraisal District	903/389-5955
Tylene Gamble	Wharton County Appraisal District	979/532-5691
Terry W. Decker	Rusk County Appraisal District	903/657-9073
Dennis Deegear	Duff and Phelps LLC	512/671-5501
C. Wayne Frazell	Pritchard & Abbott, Inc.	817/927-5314
Greg Maxim	Duff and Phelps LLC	512/671-5501
Hugh L. Landrum Jr.	Hugh L. Landrum & Associates, Inc.	281/484-7272
Justin Hyland	Calpine Corporation	832/325-0934
David D. Johnson	Tenaska, Inc.	402/691-9526
Jerry K. Crouse	Tenaska Gateway Partners, Ltd.	402/691-9526

Buddy Garcia, *Chairman*
Larry R. Soward, *Commissioner*
Bryan W. Shaw, Ph.D., *Commissioner*
Mark R. Vickery, P.G., *Executive Director*

TEXAS COMMISSION ON ENVIRONMENTAL QUALITY

Protecting Texas by Reducing and Preventing Pollution

February 23, 2009

To: Persons on the attached Mailing List (By mail, and facsimile as indicated)

Re: Appeals of the Executive Director's Use Determinations regarding Tenaska Gateway Partners, Ltd. (Rusk County), Freestone Power Generation LP (Freestone County), Borger Energy Associates, LP (Hutchinson County), Brazos Valley Energy L.P. (Fort Bend County), Freeport Energy Center, L.P. (Brazoria County), and Navasota Wharton Energy Partners LP (Wharton County), TCEQ Use Determination Nos. 07-11914, 07-11966, 07-11971, 07-11969, 07-11994 and 07-11926; TCEQ Docket Nos. 2008-0830-MIS-U, 2008-0831-MIS-U, 2008-0832-MIS-U, 2008-0849-MIS-U, 2008-0850-MIS-U, and 2008-0851-MIS-U

The above-named matters are currently scheduled to be considered by the Texas Commission on Environmental Quality ("TCEQ") at its February 25, 2009, public meeting. The TCEQ Executive Director (ED) filed a *Motion for Continuance* (ED's Motion) on February 23, 2009. The ED's Motion asks that the Commission continue its consideration of these above-named matters to allow the ED more time to evaluate its current recommendation. The ED states that none of the parties oppose the ED's Motion.

Pursuant to the ED's Motion, the Office of General Counsel has determined to continue the matter from the February 25, 2009 meeting. Accordingly, this matter is continued indefinitely pursuant to 30 TAC § 10.4. The Office of General Counsel will notify the parties by subsequent letter of the future agenda setting and any associated filing deadlines.

If you have any questions regarding this matter, please contact John Sedberry, Assistant General Counsel, at 512-239-6575.

Respectfully,

Les Trobman
General Counsel

Mailing List

Mailing List

Tenaska Gateway Partners, Ltd. (Rusk County), Freestone Power Generation LP (Freestone County), Borger Energy Associates, LP (Hutchinson County), Brazos Valley Energy L.P. (Fort Bend County), Freeport Energy Center, L.P. (Brazoria County), and Navasota Wharton Energy Partners LP (Wharton County)
TCEQ Docket Nos. 2008-0830-MIS-U, 2008-0831-MIS-U, 2008-0832-MIS-U, 2008-0849-MIS-U, 2008-0850-MIS-U, and 2008-0851-MIS-U

Diana Hooks, RPA/RTA
Chief Appraiser
Hutchinson County Appraisal District
P.O. Box 5065
Borger, Texas 79008-5065
806/274-2294 FAX806/273-3400

Borger Energy Associates, LP
7001 Boulevard 26, Suite 310
North Richland Hills, Texas 76180

Dennis Deegear
Duff and Phelps LLC
919 Congress Ave., Suite 1450
Austin, Texas 78701
512/671-5523 FAX 512/671-5501

Pritchard & Abbott, Inc.
Attn: Mr. C. Wayne Frazell
4900 Overton Commons Court
Fort Worth, Texas 76132-3687
817/926-7861 FAX 817/927-5314

Glen Whitehead, RPA
Chief Appraiser
Fort Bend County Appraisal District
2801 B. F. Terry Blvd.
Rosenberg, Texas 77471-5600
281/344-8623 FAX 281/344-8632

Brazos Valley Energy L.P.
717 Texas, Suite 1000
Houston, Texas 77002

Greg Maxim
Duff and Phelps LLC
919 Congress Ave., Suite 1450
Austin, Texas 78701
512/671-5580 FAX 512/671-5501

Hugh L. Landrum & Associates, Inc.
Attn: Mr. Hugh L. Landrum Jr.
12621 Featherwood Drive, Suite 325
Houston, Texas 77034
281/484-7000 FAX 281/484-7272

Cheryl Evans
Chief Appraiser
Brazoria County Appraisal District
500 North Chenango
Angleton, Texas 77515
979/849-7792 FAX 979/849-7984

Freeport Energy Center, LP
4100 Underwood Road
Pasedena, Texas 77507

Justin Hyland
Leo Scherrer
Calpine Corporation/Dow
717 Texas Ave. Suite 1000
Houston, Texas 77002
713/830-8873 FAX 832/325-0934

Bud Black, RPA/CTA
Chief Appraiser
Freestone Central Appraisal District
218 North Mount
Fairfield, Texas 75840
903/389-5510 FAX 903/389-5955

Freestone Power Generation L.P.
717 Texas, Suite 1000
Houston, Texas 77002

Tylene Gamble
Chief Appraiser
Wharton County Appraisal District
2407 ½ N. Richmond Road
Wharton, Texas 77488
979/532-8931 FAX 979/532-5691

Navasota Wharton Energy Partners LP
403 Corporate Woods
Magnolia, Texas 77354

Terry W. Decker, RPA/CCA/RTA
Chief Appraiser
Rusk County Appraisal District
P.O. Box 7
Henderson, Texas 75653-0007
903/657-3578 FAX 903/657-9073

David D. Johnson
Tenaska, Inc.
1044 N. 115th St., Suite 400
Omaha, Nebraska 68154-4446
402/691-9500 FAX 402/691-9526

Tenaska Gateway Partners, Ltd.
Attn: Mr. Jerry K. Crouse, CFO
1044 N. 115th St., Suite 400
Omaha, Nebraska 68154-4446
402/691-9500 FAX 402/691-9526

Stephanie Bergeron Perdue
TCEQ Environmental Law Division MC 173
P.O. Box 13087
Austin, Texas 78711-3087
512/239-0600 FAX 512/239-0606

Chris Ekoh
TCEQ Environmental Law Division MC 173
P.O. Box 13087
Austin, Texas 78711-3087
512/239-0600 FAX 512/239-0606

Ron Hatlett
TCEQ Small Business & Environmental
Assistance Division MC 110
P.O. Box 13087
Austin, Texas 78711-3087
512/239-3100 FAX 512/239-5675

Blas Coy
TCEQ Office of Public Interest Counsel
MC 103
P.O. Box 13087
Austin, Texas 78711-3087
512/239-6363 FAX 512/239-6377

Docket Clerk
TCEQ Office of Chief Clerk MC 105
P.O. Box 13087
Austin, Texas 78711-3087
512/239-3300 FAX 512/239-3311

Bridget Bohac
TCEQ Office of Public Assistance MC 108
P.O. Box 13087
Austin, Texas 78711-3087
512/239-4000 FAX 512/239-4007

David S. Schanbacher
TCEQ Chief Engineer's Office (MC 168)
P.O. Box 13087
Austin, Texas 78711-3087
512/239-6590 FAX 512/239-1794

Protecting Texas by Reducing and Preventing Pollution

FAX TRANSMITTAL

DATE: February 13, 2009 NUMBER OF PAGES *(including this cover sheet)*: 5

TO: Name (See Below)

Organization

FAX Number

FROM: TEXAS COMMISSION ON ENVIRONMENTAL QUALITY

Name Les Trobman, General Counsel

Division/Region Office of the General Counsel

Telephone Number 512/239-5500

FAX Number 512/239-5533

NOTES:

Diana Hooks	Hutchinson County Appraisal District	806/273-3400
Glen Whitehead	Fort Bend County Appraisal District	281/344-8632
Cheryl Evans	Brazoria County Appraisal District	979/849-7984
Bud Black	Freestone Central Appraisal District	903/389-5955
Tylene Gamble	Wharton County Appraisal District	979/532-5691
Terry W. Decker	Rusk County Appraisal District	903/657-9073
Dennis Deegear	Duff and Phelps LLC	512/671-5501
C. Wayne Frazell	Pritchard & Abbott, Inc.	817/927-5314
Greg Maxim	Duff and Phelps LLC	512/671-5501
Hugh L. Landrum Jr.	Hugh L. Landrum & Associates, Inc.	281/484-7272
Justin Hyland	Calpine Corporation	832/325-0934
David D. Johnson	Tenaska, Inc.	402/691-9526

Jerry K. Crouse	Tenaska Gateway Partners, Ltd.	402/691-9526
Stephanie Bergeron Perdue	TCEQ Environmental Law Division	512/239-0606
Ron Hatlett	TCEQ Small Business & Environmental Assistance Division	512/239-5678
Blas Coy	TCEQ Office of Public Interest Counsel	512/239-6377
Docket Clerk	TCEQ Office of Chief Clerk	512/239-3311
Bridget Bohac	TCEQ Office of Public Assistance	512/239-4007

Buddy Garcia, *Chairman*
Larry R. Soward, *Commissioner*
Bryan W. Shaw, Ph.D., *Commissioner*
Mark R. Vickery, P.G., *Executive Director*

TEXAS COMMISSION ON ENVIRONMENTAL QUALITY

Protecting Texas by Reducing and Preventing Pollution

February 13, 2009

To: Persons on the Attached Mailing List (by mail and facsimile as indicated)

Re: Appeals of the Executive Director's Use Determinations regarding Tenaska Gateway Partners, Ltd. (Rusk County), Freestone Power Generation LP (Freestone County), Borger Energy Associates, LP (Hutchinson County), Brazos Valley Energy L.P. (Fort Bend County), Freeport Energy Center, L.P. (Brazoria County), and Navasota Wharton Energy Partners LP (Wharton County), TCEQ Use Determination Nos. 07-11914, 07-11966, 07-11971, 07-11969, 07-11994 and 07-11926; TCEQ Docket Nos. 2008-0830-MIS-U, 2008-0831-MIS-U, 2008-0832-MIS-U, 2008-0849-MIS-U, 2008-0850-MIS-U, and 2008-0851-MIS-U

This letter is to notify you that the Texas Commission on Environmental Quality (Commission) will consider the above-described 6 appeals and all related filings during the Commission's public meeting scheduled to begin at **9:30 A.M.** on **Wednesday, February 25, 2009**.

During the public meeting, the Appraisal Districts for Rusk, Freestone, Hutchinson, Fort Bend, Brazoria, and Wharton Counties (Appraisal Districts) or their representative(s), may speak first and save part of their time for rebuttal since the Appraisal Districts have filed the appeals at issue here. The Appraisal Districts have 3 minutes each for their oral presentations, including the time for rebuttal argument. Tenaska Gateway Partners, Ltd., Freestone Power Generation LP, Borger Energy Associates, LP, Brazos Valley Energy L.P., Freeport Energy Center, L.P., and Navasota Wharton Energy Partners LP (Applicants) may speak next and have 3 minutes each for their oral presentations. If any parties share a representative, their allotted time may be combined as appropriate. The Applicants will be followed by the Executive Director and the Office of Public Interest Counsel. The Executive Director and the Office of Public Interest Counsel each have a total time of 5 minutes for their oral presentations.

If you have any questions about the public meeting or related matters, please contact John Sedberry at (512) 239-6575.

Very truly yours,

Les Trobman
General Counsel

Mailing List

Mailing List

Tenaska Gateway Partners, Ltd. (Rusk County), Freestone Power Generation LP (Freestone County), Borger Energy Associates, LP (Hutchinson County), Brazos Valley Energy L.P. (Fort Bend County), Freeport Energy Center, L.P. (Brazoria County), and Navasota Wharton Energy Partners LP (Wharton County)
TCEQ Docket Nos. 2008-0830-MIS-U, 2008-0831-MIS-U, 2008-0832-MIS-U, 2008-0849-MIS-U, 2008-0850-MIS-U, and 2008-0851-MIS-U

Diana Hooks, RPA/RTA
Chief Appraiser
Hutchinson County Appraisal District
P.O. Box 5065
Borger, Texas 79008-5065
806/274-2294 FAX806/273-3400

Borger Energy Associates, LP
7001 Boulevard 26, Suite 310
North Richland Hills, Texas 76180

Dennis Deegear
Duff and Phelps LLC
919 Congress Ave., Suite 1450
Austin, Texas 78701
512/671-5523 FAX 512/671-5501

Pritchard & Abbott, Inc.
Attn: Mr. C. Wayne Frazell
4900 Overton Commons Court
Fort Worth, Texas 76132-3687
817/926-7861 FAX 817/927-5314

Glen Whitehead, RPA
Chief Appraiser
Fort Bend County Appraisal District
2801 B. F. Terry Blvd.
Rosenberg, Texas 77471-5600
281/344-8623 FAX 281/344-8632

Brazos Valley Energy L.P.
717 Texas, Suite 1000
Houston, Texas 77002

Greg Maxim
Duff and Phelps LLC
919 Congress Ave., Suite 1450
Austin, Texas 78701
512/671-5580 FAX 512/671-5501

Hugh L. Landrum & Associates, Inc.
Attn: Mr. Hugh L. Landrum Jr.
12621 Featherwood Drive, Suite 325
Houston, Texas 77034
281/484-7000 FAX 281/484-7272

Cheryl Evans
Chief Appraiser
Brazoria County Appraisal District
500 North Chenango
Angleton, Texas 77515
979/849-7792 FAX 979/849-7984

Freeport Energy Center, LP
4100 Underwood Road
Pasedena, Texas 77507

Justin Hyland
Leo Scherrer
Calpine Corporation/Dow
717 Texas Ave. Suite 1000
Houston, Texas 77002
713/830-8873 FAX 832/325-0934

Bud Black, RPA/CTA
Chief Appraiser
Freestone Central Appraisal District
218 North Mount
Fairfield, Texas 75840
903/389-5510 FAX 903/389-5955

Freestone Power Generation L.P.
717 Texas, Suite 1000
Houston, Texas 77002

Tylene Gamble
Chief Appraiser
Wharton County Appraisal District
2407 ½ N. Richmond Road
Wharton, Texas 77488
979/532-8931 FAX 979/532-5691

Navasota Wharton Energy Partners LP
403 Corporate Woods
Magnolia, Texas 77354

Terry W. Decker, RPA/CCA/RTA
Chief Appraiser
Rusk County Appraisal District
P.O. Box 7
Henderson, Texas 75653-0007
903/657-3578 FAX 903/657-9073

David D. Johnson
Tenaska, Inc.
1044 N. 115th St., Suite 400
Omaha, Nebraska 68154-4446
402/691-9500 FAX 402/691-9526

Tenaska Gateway Partners, Ltd.
Attn: Mr. Jerry K. Crouse, CFO
1044 N. 115th St., Suite 400
Omaha, Nebraska 68154-4446
402/691-9500 FAX 402/691-9526

Stephanie Bergeron Perdue
TCEQ Environmental Law Division MC 173
P.O. Box 13087
Austin, Texas 78711-3087
512/239-0600 FAX 512/239-0606

Chris Ekoh
TCEQ Environmental Law Division MC 173
P.O. Box 13087
Austin, Texas 78711-3087
512/239-0600 FAX 512/239-0606

Ron Hatlett
TCEQ Small Business & Environmental
Assistance Division MC 110
P.O. Box 13087
Austin, Texas 78711-3087
512/239-3100 FAX 512/239-5675

Blas Coy
TCEQ Office of Public Interest Counsel
MC 103
P.O. Box 13087
Austin, Texas 78711-3087
512/239-6363 FAX 512/239-6377

Docket Clerk
TCEQ Office of Chief Clerk MC 105
P.O. Box 13087
Austin, Texas 78711-3087
512/239-3300 FAX 512/239-3311

Bridget Bohac
TCEQ Office of Public Assistance MC 108
P.O. Box 13087
Austin, Texas 78711-3087
512/239-4000 FAX 512/239-4007

Protecting Texas by Reducing and Preventing Pollution

FAX TRANSMITTAL

DATE: February 23, 2009 NUMBER OF PAGES *(including this cover sheet)*: 4

TO: Name (See Below)

Organization

FAX Number

FROM: TEXAS COMMISSION ON ENVIRONMENTAL QUALITY

Name Les Trobman, General Counsel

Division/Region Office of the General Counsel

Telephone Number 512/239-5500

FAX Number 512/239-5533

NOTES:

Diana Hooks	Hutchinson County Appraisal District	806/273-3400
Glen Whitehead	Fort Bend County Appraisal District	281/344-8632
Cheryl Evans	Brazoria County Appraisal District	979/849-7984
Bud Black	Freestone Central Appraisal District	903/389-5955
Tylene Gamble	Wharton County Appraisal District	979/532-5691
Terry W. Decker	Rusk County Appraisal District	903/657-9073
Dennis Deegear	Duff and Phelps LLC	512/671-5501
C. Wayne Frazell	Pritchard & Abbott, Inc.	817/927-5314
Greg Maxim	Duff and Phelps LLC	512/671-5501
Hugh L. Landrum Jr.	Hugh L. Landrum & Associates, Inc.	281/484-7272
Justin Hyland	Calpine Corporation	832/325-0934
David D. Johnson	Tenaska, Inc.	402/691-9526
Jerry K. Crouse	Tenaska Gateway Partners, Ltd.	402/691-9526

Buddy Garcia, *Chairman*
Larry R. Soward, *Commissioner*
Bryan W. Shaw, Ph.D., *Commissioner*
Mark R. Vickery, P.G., *Executive Director*

TEXAS COMMISSION ON ENVIRONMENTAL QUALITY

Protecting Texas by Reducing and Preventing Pollution

February 23, 2009

To: Persons on the attached Mailing List (By mail, and facsimile as indicated)

Re: Appeals of the Executive Director's Use Determinations regarding Tenaska Gateway Partners, Ltd. (Rusk County), Freestone Power Generation LP (Freestone County), Borger Energy Associates, LP (Hutchinson County), Brazos Valley Energy L.P. (Fort Bend County), Freeport Energy Center, L.P. (Brazoria County), and Navasota Wharton Energy Partners LP (Wharton County), TCEQ Use Determination Nos. 07-11914, 07-11966, 07-11971, 07-11969, 07-11994 and 07-11926; TCEQ Docket Nos. 2008-0830-MIS-U, 2008-0831-MIS-U, 2008-0832-MIS-U, 2008-0849-MIS-U, 2008-0850-MIS-U, and 2008-0851-MIS-U

The above-named matters are currently scheduled to be considered by the Texas Commission on Environmental Quality ("TCEQ") at its February 25, 2009, public meeting. The TCEQ Executive Director (ED) filed a *Motion for Continuance* (ED's Motion) on February 23, 2009. The ED's Motion asks that the Commission continue its consideration of these above-named matters to allow the ED more time to evaluate its current recommendation. The ED states that none of the parties oppose the ED's Motion.

Pursuant to the ED's Motion, the Office of General Counsel has determined to continue the matter from the February 25, 2009 meeting. Accordingly, this matter is continued indefinitely pursuant to 30 TAC § 10.4. The Office of General Counsel will notify the parties by subsequent letter of the future agenda setting and any associated filing deadlines.

If you have any questions regarding this matter, please contact John Sedberry, Assistant General Counsel, at 512-239-6575.

Respectfully,

Les Trobman
General Counsel

Mailing List

Mailing List

Tenaska Gateway Partners, Ltd. (Rusk County), Freestone Power Generation LP (Freestone County), Borger Energy Associates, LP (Hutchinson County), Brazos Valley Energy L.P. (Fort Bend County), Freeport Energy Center, L.P. (Brazoria County), and Navasota Wharton Energy Partners LP (Wharton County)
TCEQ Docket Nos. 2008-0830-MIS-U, 2008-0831-MIS-U, 2008-0832-MIS-U, 2008-0849-MIS-U, 2008-0850-MIS-U, and 2008-0851-MIS-U

Diana Hooks, RPA/RTA
Chief Appraiser
Hutchinson County Appraisal District
P.O. Box 5065
Borger, Texas 79008-5065
806/274-2294 FAX806/273-3400

Borger Energy Associates, LP
7001 Boulevard 26, Suite 310
North Richland Hills, Texas 76180

Dennis Deegear
Duff and Phelps LLC
919 Congress Ave., Suite 1450
Austin, Texas 78701
512/671-5523 FAX 512/671-5501

Pritchard & Abbott, Inc.
Attn: Mr. C. Wayne Frazell
4900 Overton Commons Court
Fort Worth, Texas 76132-3687
817/926-7861 FAX 817/927-5314

Glen Whitehead, RPA
Chief Appraiser
Fort Bend County Appraisal District
2801 B. F. Terry Blvd.
Rosenberg, Texas 77471-5600
281/344-8623 FAX 281/344-8632

Brazos Valley Energy L.P.
717 Texas, Suite 1000
Houston, Texas 77002

Greg Maxim
Duff and Phelps LLC
919 Congress Ave., Suite 1450
Austin, Texas 78701
512/671-5580 FAX 512/671-5501

Hugh L. Landrum & Associates, Inc.
Attn: Mr. Hugh L. Landrum Jr.
12621 Featherwood Drive, Suite 325
Houston, Texas 77034
281/484-7000 FAX 281/484-7272

Cheryl Evans
Chief Appraiser
Brazoria County Appraisal District
500 North Chenango
Angleton, Texas 77515
979/849-7792 FAX 979/849-7984

Freeport Energy Center, LP
4100 Underwood Road
Pasedena, Texas 77507

Justin Hyland
Leo Scherrer
Calpine Corporation/Dow
717 Texas Ave. Suite 1000
Houston, Texas 77002
713/830-8873 FAX 832/325-0934

Bud Black, RPA/CTA
Chief Appraiser
Freestone Central Appraisal District
218 North Mount
Fairfield, Texas 75840
903/389-5510 FAX 903/389-5955

Freestone Power Generation L.P.
717 Texas, Suite 1000
Houston, Texas 77002

Tylene Gamble
Chief Appraiser
Wharton County Appraisal District
2407 ½ N. Richmond Road
Wharton, Texas 77488
979/532-8931 FAX 979/532-5691

Navasota Wharton Energy Partners LP
403 Corporate Woods
Magnolia, Texas 77354

Terry W. Decker, RPA/CCA/RTA
Chief Appraiser
Rusk County Appraisal District
P.O. Box 7
Henderson, Texas 75653-0007
903/657-3578 FAX 903/657-9073

David D. Johnson
Tenaska, Inc.
1044 N. 115th St., Suite 400
Omaha, Nebraska 68154-4446
402/691-9500 FAX 402/691-9526

Tenaska Gateway Partners, Ltd.
Attn: Mr. Jerry K. Crouse, CFO
1044 N. 115th St., Suite 400
Omaha, Nebraska 68154-4446
402/691-9500 FAX 402/691-9526

Stephanie Bergeron Perdue
TCEQ Environmental Law Division MC 173
P.O. Box 13087
Austin, Texas 78711-3087
512/239-0600 FAX 512/239-0606

Chris Ekoh
TCEQ Environmental Law Division MC 173
P.O. Box 13087
Austin, Texas 78711-3087
512/239-0600 FAX 512/239-0606

Ron Hatlett
TCEQ Small Business & Environmental
Assistance Division MC 110
P.O. Box 13087
Austin, Texas 78711-3087
512/239-3100 FAX 512/239-5675

Blas Coy
TCEQ Office of Public Interest Counsel
MC 103
P.O. Box 13087
Austin, Texas 78711-3087
512/239-6363 FAX 512/239-6377

Docket Clerk
TCEQ Office of Chief Clerk MC 105
P.O. Box 13087
Austin, Texas 78711-3087
512/239-3300 FAX 512/239-3311

Bridget Bohac
TCEQ Office of Public Assistance MC 108
P.O. Box 13087
Austin, Texas 78711-3087
512/239-4000 FAX 512/239-4007

David S. Schanbacher
TCEQ Chief Engineer's Office (MC 168)
P.O. Box 13087
Austin, Texas 78711-3087
512/239-6590 FAX 512/239-1794

TCEQ Docket Numbers
2008-0830-MIS-U (UD 07-11914/Tenaska Gateway Partners, Ltd – Rusk County)
2008-0831-MIS-U (UD 07-11966/Freestone Power Generation, L.P. – Freestone County)
2008-0832-MIS-U (UD 07-11971/Borger Energy Associates, L.P. – Hutchinson County)
2008-0849-MIS-U (UD 07-11969/Brazos Valley Energy, L.P. – Fort Bend County)
2008-0850-MIS-U (UD 07-11994/Freeport Energy Center, L.P. – Brazoria County)
2008-0851-MIS-U (UD 07-11926/Navasota Wharton Energy Partners, L.P. – Wharton County)

Appeal of Executive Director's Use	§	Before the
Determination Issue to	§	
Tenaska Gateway Partners, Ltd;	§	Texas Commission
Freestone Power Generation, L.P.;	§	
Borger Energy Associates, L.P.;	§	on
Brazos Valley Energy, L.P.;	§	
Freeport Energy Center, L.P.; and	§	
Navasota Wharton Energy Partners, L.P	§	Environmental Quality

Executive Director's Request for Remand of Applications Submitted by Tenaska Gateway Partners, Ltd; Freestone Power Generation, L.P.; Borger Energy Associates, L.P.; Brazos Valley Energy, L.P.; Freeport Energy Center, L.P.; and Navasota Wharton Energy Partners, L.P.

Pursuant to 30 TAC § 17.25(d), the Executive Director of the Texas Commission on Environmental Quality requests that the General Council remand the above listed applications for further processing.

Respectfully submitted,

Texas Commission on Environmental Quality

Zak Covar
Executive Director

Caroline Sweeney, Deputy Director
Office of Legal Services

Robert Martinez, Director
Environmental Law Division

Daniel Long

Daniel Long, Staff Attorney
Environmental Law Division
State Bar No. 24032679
P.O. Box 13087, MC 173
Austin, Texas 78711-3087
(512) 239-5373
(512) 239-0606

CERTIFICATE OF SERVICE

I certify that on June 18, 2012, the original and 7 copies of the Executive Director's Request for Remand of Applications Submitted by Tenaska Gateway Partners, Ltd; Freestone Power Generation, L.P.; Borger Energy Associates, L.P.; Brazos Valley Energy, L.P.; Freeport Energy Center, L.P.; and Navasota Wharton Energy Partners, L.P. was filed with the Office of the Chief Clerk, Texas Commission on Environmental Quality, and was served by first-class mail, agency mail, electronic mail, or facsimile to all persons on the attached mailing list.

Daniel Long

Daniel Long, Staff Attorney
Environmental Law Division
Texas Commission on Environmental Quality

Mailing List
TCEQ Docket Numbers
2008-0830-MIS-U (UD 07-11914/Tenaska Gateway Partners, Ltd – Rusk County)
2008-0831-MIS-U (UD 07-11966/Freestone Power Generation, L.P. – Freestone County)
2008-0832-MIS-U (UD 07-11971/Borger Energy Associates, L.P. – Hutchinson County)
2008-0849-MIS-U (UD 07-11969/Brazos Valley Energy, L.P. – Fort Bend County)
2008-0850-MIS-U (UD 07-11994/Freeport Energy Center, L.P. – Brazoria County)
2008-0851-MIS-U (UD 07-11926/Navasota Wharton Energy Partners, L.P. – Wharton County)

Appraisal Districts

Terry W. Decker, RRP/CTA/RTA
Chief Appraiser
Rusk County Appraisal District
P. O. Box 7
Henderson, Texas 75653-0007
903/657-3578 Fax 903/657-9073
tdecker@ ruskcad.org

Bud Black, RPA/CTA
Chief Appraiser
Freestone Central Appraisal District
218 North Mount Street
Fairfield, Texas 75840
903/389-5510 Fax 903/389-5955
general.info@freestoncad.org

Diana Hooks, RPA/RTA
Chief Appraiser
Hutchinson County Appraisal District
P. O. Box 5065
Borger, Texas 79008-5065
806/274-2294 Fax 806/273-3400
hcad3@amaonline.com

Glen Whitehead, RPA
Chief Appraiser
Fort Bend County Central Appraisal District
2801 B. F. Terry Blvd.
Rosenberg, Texas 77471-5600
281/344-8623 Fax 281/762-9666
Glenwhitehead@fbcad.org

Cheryl Evans
Chief Appraiser
Brazoria County Appraisal District
500 North Chenango Street
Angleton, Texas 77515
979/849-7792 Fax 979/849-7984
bcad@brazoriacad.org

Tylene Gamble
Chief Appraiser
Wharton County Appraisal District
308 East Milam Street
Wharton, Texas 77488-4918
979/532-8931 Fax 979/532-5691
whartoncad@sbcglobal.net

Pritchard & Abbott, Inc.
Attn: Mr. C. Wayne Frazell
4900 Overton Commons Court
Fort Worth, Texas 76132-3687
817/926-7861 Fax 817/927-5314
wfrazell@pandai.com

Applicants:

David D. Johnson
Tenaska Gateway Partners, Ltd.
1044 N 115th St. Suite 400
Omaha, Nebraska 68154-4446
402/691-9500 Fax 402/691-9226

Freestone Power Generation, L.P.
717 Texas, Suite 1000
Houston, Texas 77002

Borger Energy Associates, L.P.
7001 Boulevard 26, Suite 310
North Richland Hills, Texas 76180

Brazos Valley Energy, L.P.
717 Texas, Suite 1000
Houston, Texas 77002

Freeport Energy Center, L.P.
4100 Underwood Road
Pasadena, Texas 77507

Navasota Wharton Energy Partners LP
403 Corporate Woods
Magnolia, Texas 77354

Greg Maxim
Dennis Deegear
Duff & Phelps LLC
919 Congress Ave., Suite 1450
Austin, Texas 78701
512/671-5580 Fax 512/671-5501
gregory.maxim@duffandphelps.com
dennis.deegar@duffandphelps.com

Justin Hyland
Leo Scherrer
717 Texas Avenue
Houston, Texas 77002
713/830-8873 Fax 713/830-8670
hylandj@calpine.com
lscherrer@dow.com

Hugh L. Landrum & Associates
Attn: Mr. Hugh L. Landrum, Jr.
12621 Featherwood, Suite 325
Houston, Texas 77034
281/484-7000 Fax 281/484-7272
hughjr@hughlandrum.com

Commission:

Blas Coy
TCEQ Office of Public Interest Counsel (MC 103)
P. O. Box 13087
Austin, Texas 78711-3087
512/239-6363 Fax 512/239-6377

Docket Clerk
TCEQ Office of the Chief Clerk (MC 105)
P. O. Box 13087
Austin, Texas 78711-3087
512/239-3300 Fax 512/239-3311

1. BASTROP ENERGY PARTNERS, LP

Bastrop Central Appraisal District
P O Drawer 578 Bastrop Texas 78602
(512) 303-1930 Telephone / (512) 303-4805 Fax

Property Detail Sheet (P92019)

History GIS Map Datasheet

Owner Information

Owner ID:	O0128343
Owner Name:	BASTROP ENERGY PARTNERS LP
Owner Address:	12 GREENWAY PLAZA STE #60 HOUSTON,TX 77046
Property Address:	

Parcel Information

Legal Description:	POLLUTION CONTROL PROJECT (TRACKING #01-6296 , 07-11907, 07-12001)
Neighborhood:	( )
Acreage:	
Cross Reference:	
Undivided Interest:	
Exemption Codes:	PC (Pollution Control)
Entity Codes:	G01 (Bastrop County) RD1 (County Road) S04 (Bastrop ISD) ESD1 (Bastrop County Emergency Svc Dist #1)
Deed Type:	
Deed Book:	
Deed Page:	
Map Page:	

Values Breakdown	2012 Value
Land HS:	$0 +
Land NHS:	$0 +
Improvement HS:	$0 +
Improvement NHS:	$22,754,100 +
Ag Market:	$0
Ag Use:	$0 +
Timber Market:	$0
Timber Use:	$0 +
Assessed:	$22,754,100 =

Get Adobe Reader

A recent version of Adobe Acrobat Reader is required to view PDF documents. Acrobat Reader is a free program available here.

Bastrop Central Appraisal District
P O Drawer 578 Bastrop Texas 78602
(512) 303-1930 Telephone / (512) 303-4805 Fax

Home
General Information
News
FAQ
Searches
- Property ID
- Owner
- Address
- Advanced Search

Property Data
- Detail Sheet
- History
- Datasheet

Other
- Taxing Units
- Abstracts
- Subdivisions
- GIS Maps
- Bastrop County Tax Offi
- Bastrop County Clerk
- Property Tax Code
- Housing Cap Rate
- Links
- Taxpayers Rights (Engli
- Taxpayers Rights (Span
- Utilities
- Contact Webmaster
- File an Online Protest

Assessment History (P92019)

XRef ID

Situs Address

	2011	2010	2009	2008
Improvement HS	$0	$0	$0	$0
Improvement NHS	$22,112,200	$20,023,600	$24,487,930	$11,067,500
Land HS	$0	$0	$0	$0
Land NHS	$0	$0	$0	$0
Agricultural Mkt	$0	$0	$0	$0
Agricultural Use	$0	$0	$0	$0
Timber Market	$0	$0	$0	$0
Timber Use	$0	$0	$0	$0
Market Value	$0	$0	$0	$0
Homestead Limit				
Assessed	$22,112,200	$20,023,600	$24,487,930	$11,067,500
Exemptions	PC	PC	PC	PC

Current Owner	Legal Description	Exemptions	Market
BASTROP ENERGY PARTNERS LP (O0128343) 12 GREENWAY PLAZA STE #60 HOUSTON,TX 77046	POLLUTION CONTROL PROJECT (TRACKING #01-6296 , 07-11907, 07-12001)	PC	
		Entities	**Assessed**
		G01, RD1, S04, ESD1	

Situs Address

Sales

Date	Volume	Page	Seller Name

History Information

	2012	2011	2010	2009
Imp HS	-	-	-	-
Imp NHS	$22,754,100	$22,112,200	$20,023,600	$24,487,930
Land HS	-	-	-	-
Land NHS	-	-	-	-
Ag Mkt	-	-	-	-
Ag Use	-	-	-	-
Tim Mkt	-	-	-	-
Tim Use	-	-	-	-
HS Cap	-	-	-	-
Assessed	$22,754,100	$22,112,200	$20,023,600	$24,487,930

Building Attributes

Construction	Foundation	Exterior	Interior	Roof	Flooring

Heat/AC	Baths	Fireplace	Year Built	Rooms	Bedrooms

Land Segments

SPTB	Description	Area	Market	Ag Value

Improvements

Type	Description	Area	Year Built	Eff Year	Value

Bastrop Central Appraisal District
P O Drawer 578 Bastrop Texas 78602
(512) 303-1930 Telephone / (512) 303-4805 Fax

Property Detail Sheet (P113998)

Home
General Information
News
FAQ
Searches
- Property ID
- Owner
- Address
- Advanced Search

Property Data
- Detail Sheet
- History
- Datasheet

Other
- Taxing Units
- Abstracts
- Subdivisions
- GIS Maps
- Bastrop County Tax Offi
- Bastrop County Clerk
- Property Tax Code
- Housing Cap Rate
- Links
- Taxpayers Rights (Engli
- Taxpayers Rights (Span
- Utilities
- Contact Webmaster
- File an Online Protest

History GIS Map Datasheet

Owner Information

Owner ID:	00128343
Owner Name:	BASTROP ENERGY PARTNERS LP
Owner Address:	12 GREENWAY PLAZA STE #60 HOUSTON,TX 77046
Property Address:	

Parcel Information

Legal Description:	LOW NOX BURNER SPARES (PART OF 07-11907)
Neighborhood:	( )
Acreage:	
Cross Reference:	
Undivided Interest:	
Exemption Codes:	PC (Pollution Control)
Entity Codes:	G01 (Bastrop County) RD1 (County Road) S04 (Bastrop ISD) ESD1 (Bastrop County Emergency Svc Dist #1)
Deed Type:	
Deed Book:	
Deed Page:	
Map Page:	

Values Breakdown	2012 Value
Land HS:	$0 +
Land NHS:	$0 +
Improvement HS:	$0 +
Improvement NHS:	$2,017,800 +
Ag Market:	$0
Ag Use:	$0 +
Timber Market:	$0
Timber Use:	$0 +
Assessed:	$2,017,800 =

Get Adobe Reader
A recent version of Adobe Acrobat Reader is required to view PDF documents. Acrobat Reader is a free program available here.

Bastrop Central Appraisal District
P O Drawer 578 Bastrop Texas 78602
(512) 303-1930 Telephone / (512) 303-4805 Fax

Home
General Information
News
FAQ
Searches
- Property ID
- Owner
- Address
- Advanced Search

Property Data
- Detail Sheet
- History
- Datasheet

Other
- Taxing Units
- Abstracts
- Subdivisions
- GIS Maps
- Bastrop County Tax Offi
- Bastrop County Clerk
- Property Tax Code
- Housing Cap Rate
- Links
- Taxpayers Rights (Engli
- Taxpayers Rights (Span
- Utilities
- Contact Webmaster
- File an Online Protest

Assessment History (P113998)

XRef ID

Situs Address

	2011	2010	2009	2008
Improvement HS	$0	$0	$0	$0
Improvement NHS	$2,017,800	$2,017,800	$2,017,800	$2,507,820
Land HS	$0	$0	$0	$0
Land NHS	$0	$0	$0	$0
Agricultural Mkt	$0	$0	$0	$0
Agricultural Use	$0	$0	$0	$0
Timber Market	$0	$0	$0	$0
Timber Use	$0	$0	$0	$0
Market Value	$0	$0	$0	$0
Homestead Limit				
Assessed	$2,017,800	$2,017,800	$2,017,800	$2,507,820
Exemptions	PC	PC	PC	PC

2012
P113998

Current Owner	Legal Description	Exemptions	Market
BASTROP ENERGY PARTNERS LP (O0128343) 12 GREENWAY PLAZA STE #60 HOUSTON,TX 77046	LOW NOX BURNER SPARES (PART OF 07-11907)	PC	
		Entities	**Assessed**
		G01, RD1, S04, ESD1	

Situs Address

Sales

Date	Volume	Page	Seller Name

History Information

	2012	2011	2010	2009
Imp HS	-	-	-	-
Imp NHS	$2,017,800	$2,017,800	$2,017,800	$2,017,800
Land HS	-	-	-	-
Land NHS	-	-	-	-
Ag Mkt	-	-	-	-
Ag Use	-	-	-	-
Tim Mkt	-	-	-	-
Tim Use	-	-	-	-
HS Cap	-	-	-	-
Assessed	$2,017,800	$2,017,800	$2,017,800	$2,017,800

Building Attributes

Construction	Foundation	Exterior	Interior	Roof	Flooring

Heat/AC	Baths	Fireplace	Year Built	Rooms	Bedrooms

Land Segments

SPTB	Description	Area	Market	Ag Value

Improvements

Type	Description	Area	Year Built	Eff Year	Value

2. BAYTOWN ENERGY CENTER, LP

Chambers County Appraisal District

Chief Appraiser - Michael L. Fregia, RPA

Official Website
Hosted By Pritchard & Abbott, Inc.

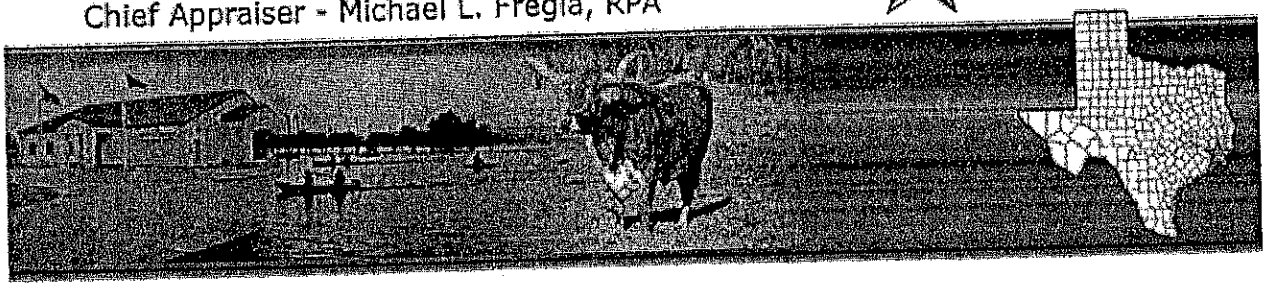

General Mineral Property Details

New Property Search

Go To Previous Page

Legal Information:

POLLUTION CONTROL EQUIPMENT
REAL NP

Account Number:

005060-000020

Operator:

Owner Information:

BAYTOWN ENERGY CENTER LP
CALPINE ENERGY GROUP
PROPERTY TAX DEPARTMENT
717 TEXAS ST STE 1000
HOUSTON TX 77002 2743

Lease Information:

RRC#:	
Category Code:	F2
Interest Type:	
Owner Interest:	1
Under 500:	No
Market Value:	0
Taxable Value:	0

Jur Code	Description	Total Market	Total Exemption	Taxable
01	CHAMBERS COUNTY	68,579,300	0	0
01R	CHAMBERS COUNTY ROAD	68,579,300	0	0
32	GOOSECREEK ISD	68,579,300	0	0
64	LEE COLLEGE	68,579,300	0	0
66	CEDAR BAYOU NAV	68,579,300	0	0

New Property Search

Go To Previous Page

Real Estate Appraisal Information is the 2012 NOTICE Appraisal Values. © CHAMBERS COUNTY APPRAISAL DISTRICT | Last Data Update: 06/14/2012

PRITCHARD & ABBOTT, INC.
VALUATION CONSULTANTS

©2011 Pritchard & Abbott, Inc. - All rights reserved.
Version 1.7.6

3. CALPINE CONSTRUCTION FINANCE COMPANY, LP

Hidalgo CAD

Property Search Results > 625699 CALPINE CONST FIN(MAGIC VY GN) for Year 2012

Property

Account

Property ID: 625699
Geographic ID: 00011-90-200-0001-10
Type: Personal
Property Use Code:
Property Use Description:

Legal Description: MAGIC VLY GENERATING FAC
Agent Code:

Location

Address:
TX
Neighborhood:
Neighborhood CD:

Mapsco:
Map ID:

Owner

Name: CALPINE CONST FIN(MAGIC VY GN)
Mailing Address: ATTN: PROPERTY TAX
717 TEXAS ST STE 1000
HOUSTON , TX 77002-2743

Owner ID: 930535
% Ownership: 100.0000000000%
Exemptions: PC

Values

			Ag / Timber Use Value
(+) Improvement Homesite Value:	+	$0	
(+) Improvement Non-Homesite Value:	+	$0	
(+) Land Homesite Value:	+	$0	
(+) Land Non-Homesite Value:	+	$0	
(+) Agricultural Market Valuation:	+	$0	$0
(+) Timber Market Valuation:	+	$0	$0
(=) Market Value:	=	$94,200,000	
(–) Ag or Timber Use Value Reduction:	–	$0	
(=) Appraised Value:	=	$94,200,000	
(–) HS Cap:	–	$0	
(=) Assessed Value:	=	$94,200,000	

Taxing Jurisdiction

Owner: CALPINE CONST FIN(MAGIC VY GN)
% Ownership: 100.0000000000%
Total Value: $94,200,000

Entity	Description	Tax Rate	Appraised Value	Taxable Value	Estimated Tax
CAD	APPRAISAL DISTRICT	0.000000	$94,200,000	$94,200,000	$0.00
CEB	CITY OF EDINBURG	0.635000	$94,200,000	$70,343,600	$446,681.86
DR1	DRAINAGE DISTRICT #1	0.073300	$94,200,000	$70,613,600	$51,759.77
GHD	HIDALGO COUNTY	0.590000	$94,200,000	$70,613,600	$416,620.24
JCC	SOUTH TEXAS COLLEGE	0.150700	$94,200,000	$70,613,600	$106,414.70
R15	ROAD DIST 15	0.000000	$94,200,000	$70,613,600	$0.00
SEB	EDINBURG ISD	1.239800	$94,200,000	$70,613,600	$875,467.41
SST	SOUTH TEXAS SCHOOL	0.049200	$94,200,000	$70,613,600	$34,741.89

Total Tax Rate: 2.738000

Taxes w/Current Exemptions: $1,931,685.87

Taxes w/o Exemptions: $2,579,196.00

Improvement / Building

No improvements exist for this property.

Land

No land segments exist for this property.

Roll Value History

Year	Improvements	Land Market	Ag Valuation	Appraised	HS Cap	Assessed
2012	$0	$0	0	94,200,000	$0	$94,200,000
2011	$0	$0	0	89,100,000	$0	$89,100,000
2010	$0	$0	0	100,500,000	$0	$100,500,000
2009	$0	$0	0	115,282,900	$0	$115,282,900
2008	$0	$0	0	128,937,120	$0	$128,937,120
2007	$0	$0	0	123,604,920	$0	$123,604,920
2006	$0	$0	0	129,948,840	$0	$129,948,840
2005	$0	$0	0	157,217,820	$0	$157,217,820
2004	$0	$0	0	167,250,000	$0	$167,250,000
2003	$0	$0	0	219,706,090	$0	$219,706,090

Deed History - (Last 3 Deed Transactions)

#	Deed Date	Type	Description	Grantor	Grantee	Volume	Page	Deed Number

Tax Due

Property Tax Information as of 07/27/2012

Amount Due if Paid on:

Year	Taxing Jurisdiction	Taxable Value	Base Tax	Base Taxes Paid	Base Tax Due	Discount / Penalty & Interest	Attorney Fees	Amount Due

NOTE: Penalty & Interest accrues every month on the unpaid tax and is added to the balance. Attorney fees may also increase your tax liability if not paid by July 1. If you plan to submit payment on a future date, make sure you enter the date and RECALCULATE to obtain the correct total amount due.

Questions Please Call (956) 381-8466

Website version: 1.2.2.2

Database last updated on: 7/27/2012 6:04 AM

© 2012 True Automation, Inc. All Rights Reserved. Privacy Notice

This site only supports Internet Explorer 6+, Netscape 7+ and Firefox 1.5+.

4. CHANNEL ENERGY CENTER, LP

Thursday, July 26, 2012

Tax Year: 2012

HARRIS COUNTY APPRAISAL DISTRICT
REAL PROPERTY ACCOUNT INFORMATION
0410340000041

Print E-mail

Ownership History | Fiduciary Information

Owner and Property Information

Owner Name & Mailing Address:	**CHANNEL ENERGY CENTER LP** **700 MILAM ST STE 800** **HOUSTON TX 77002-2835**	Legal Description:	**TR 3 (600 AREA) (IMPS ONLY) PASADENA INDUSTRIAL AREA (LAND*0410340000003) PLTN CNTL** **ABST 78 W VINCE**
		Property Address:	**12000 LAWNDALE ST** **HOUSTON TX 77017**

State Class Code	Land Use Code	Building Class	Total Units
F2 -- Real, Industrial	3300 -- Industrial Imps Only Land	--	0

Land Area	Total Living Area	Net Rentable Area	Neighborhood	Neighborhood Group	Market Area	Map Facet	Key Map®
0 SF	0	0	9729.02	0	4027	5756C	536B

Value Status Information

Capped Account	Value Status	Notice Date	Shared CAD
No	Noticed	06/01/2012	No

Exemptions and Jurisdictions

Exemption Type	Districts	Jurisdictions	ARB Status	2011 Rate	2012 Rate	Online Tax Bill
Pollution Control	021	PASADENA ISD	Not Certified	1.350000		
	040	HARRIS COUNTY	Not Certified	0.391170		View
	041	HARRIS CO FLOOD CNTRL	Not Certified	0.028090		
	042	PORT OF HOUSTON AUTHY	Not Certified	0.018560		
	043	HARRIS CO HOSP DIST	Not Certified	0.192160		
	044	HARRIS CO EDUC DEPT	Not Certified	0.006581		
	047	SAN JACINTO COM COL D	Not Certified	0.185602		

Valuations

	Value as of January 1, 2011			Value as of January 1, 2012	
	Market	Appraised		Market	Appraised
Land	0		Land	0	
Improvement	38,421,100		Improvement	40,703,900	
Total	38,421,100	38,421,100	Total	40,703,900	40,703,900

5-Year Value History

Land

Market Value Land

Line	Description	Site Code	Unit Type	Units	Size Factor	Site Factor	Appr O/R Factor	Appr O/R Reason	Total Adj	Unit Price	Adj Unit Price	Value
1	3300 -- Industrial Imps Only Land	--	GR	0	1.00	1.00	1.00	--	1.00	0.00	0.00	0

Building

(No Building Data)

5. CORPUS CHRISTI COGENERATION

Nueces CAD

Property Search Results > 20301100 CORPUS CHRISTI COGENERATION for Year 2012

Property

Account

Property ID: 20301100
Geographic ID: IC-0000593-0120
Type: Personal
Property Use Code:
Property Use Description:

Legal Description: POLL CONTR - TCEQ 100%
Agent Code:

Location

Address:
Neighborhood:
Neighborhood CD:

Mapsco:
Map ID:

Owner

Name: CORPUS CHRISTI COGENERATION
Mailing Address: ATTN: PROPERTY TAX
717 TEXAS ST STE 1000
HOUSTON , TX 77002-2743

Owner ID: 648359
% Ownership: 100.0000000000%

Exemptions: PC

Values

			Ag / Timber Use Value
(+) Improvement Homesite Value:	+	$0	
(+) Improvement Non-Homesite Value:	+	$0	
(+) Land Homesite Value:	+	$0	
(+) Land Non-Homesite Value:	+	$0	
(+) Agricultural Market Valuation:	+	$0	$0
(+) Timber Market Valuation:	+	$0	$0
(=) Market Value:	=	$18,365,100	
(–) Ag or Timber Use Value Reduction:	–	$0	
(=) Appraised Value:	=	$18,365,100	
(–) HS Cap:	–	$0	
(=) Assessed Value:	=	$18,365,100	

Taxing Jurisdiction

Owner: CORPUS CHRISTI COGENERATION
% Ownership: 100.0000000000%
Total Value: $18,365,100

Entity	Description	Tax Rate	Appraised Value	Taxable Value	Estimated Tax
CAD	APPRAISAL DISTRICT	0.000000	$18,365,100	$0	$0.00
GNU	NUECES COUNTY	0.350999	$18,365,100	$0	$0.00
HOSP	HOSPITAL DISTRICT	0.162428	$18,365,100	$0	$0.00
JRC	DEL MAR JR COLL	0.258003	$18,365,100	$0	$0.00
RFM	FARM TO MKT ROAD	0.004260	$18,365,100	$0	$0.00
SE	CCISD	1.237350	$18,365,100	$0	$0.00
	Total Tax Rate:	2.013040			

Taxes w/Current Exemptions: $0.00

Taxes w/o Exemptions: $369,696.81

Improvement / Building

No improvements exist for this property.

Land

No land segments exist for this property.

Roll Value History

Year	Improvements	Land Market	Ag Valuation	Appraised	HS Cap	Assessed
2012	$0	$0	0	18,365,100	$0	$18,365,100
2011	$0	$0	0	18,600,000	$0	$18,600,000
2010	$0	$0	0	20,576,200	$0	$20,576,200
2009	$0	$0	0	21,888,600	$0	$21,888,600
2008	$0	$0	0	21,888,600	$0	$21,888,600
2007	$0	$0	0	8,826,700	$0	$8,826,700
2006	$0	$0	0	10,237,500	$0	$10,237,500
2005	$0	$0	0	11,666,770	$0	$11,666,770
2004	$0	$0	0	10,998,510	$0	$10,998,510
2003	$0	$0	0	3,751,470	$0	$3,751,470

Deed History - (Last 3 Deed Transactions)

#	Deed Date	Type	Description	Grantor	Grantee	Volume	Page	Deed Number

Questions Please Call (361) 881-9978

Website version: 1.2.2.2

Database last updated on: 7/25/2012 3:12 AM

© 2012 True Automation, Inc. All Rights Reserved. Privacy Notice

This site only supports Internet Explorer 6+, Netscape 7+ and Firefox 1.5+.

6. DEER PARK ENERGY CENTER

Wednesday, July 25, 2012

Tax Year: 2012

HARRIS COUNTY APPRAISAL DISTRICT
REAL PROPERTY ACCOUNT INFORMATION
0402180020055

Print E-mail

Ownership History | Fiduciary Information

Owner and Property Information

Owner Name & Mailing Address:	**DEER PARK ENERGY CENTER PROPERTY TAX DEPT 717 TEXAS ST STE 1000 HOUSTON TX 77002-2743**	Legal Description:	**TRS 1B 1B-3 1B-8 1B-10 1L 1N (IMPS ONLY) 2B 3 & 3C (LAND*0402180020019) POLLUTION CONTROL ABST 18 T EARLE**
		Property Address:	**5600 HIGHWAY 225 DEER PARK TX 77536**

State Class Code	Land Use Code	Building Class	Total Units
F2 -- Real, Industrial	3300 -- Industrial Imps Only Land	--	0

Land Area	Total Living Area	Net Rentable Area	Neighborhood	Neighborhood Group	Market Area	Map Facet	Key Map®
0 SF	0	0	5982.12	0	4027	5955B	538E

Value Status Information

Capped Account	Value Status	Notice Date	Shared CAD
No	Noticed	06/01/2012	No

Exemptions and Jurisdictions

Exemption Type	Districts	Jurisdictions	ARB Status	2011 Rate	2012 Rate	Online Tax Bill
Pollution Control	002	DEER PARK ISD	Not Certified	1.396700		View
	040	HARRIS COUNTY	Not Certified	0.391170		View
	041	HARRIS CO FLOOD CNTRL	Not Certified	0.028090		
	042	PORT OF HOUSTON AUTHY	Not Certified	0.018560		
	043	HARRIS CO HOSP DIST	Not Certified	0.192160		
	044	HARRIS CO EDUC DEPT	Not Certified	0.006581		
	047	SAN JACINTO COM COL D	Not Certified	0.185602		

Valuations

	Value as of January 1, 2011			Value as of January 1, 2012	
	Market	Appraised		Market	Appraised
Land	0		Land	0	
Improvement	38,416,600		Improvement	40,702,500	
Total	38,416,600	38,416,600	Total	40,702,500	40,702,500

5-Year Value History

Land

Market Value Land

Line	Description	Site Code	Unit Type	Units	Size Factor	Site Factor	Appr O/R Factor	Appr O/R Reason	Total Adj	Unit Price	Adj Unit Price	Value
1	3300 -- Industrial Imps Only Land	--	GR	0	1.00	1.00	1.00	--	1.00	0.00	0.00	0

Building

(No Building Data)

You have reached the website of the Harris County Tax Office. Our website offers tax searches by name, address and account number. Please visit our homepage for more information.

Don Sumners, CPA, RTA
Tax Assessor-Collector
P.O. Box 4622
Houston, Texas 77210-4622

2011

2011 Property Tax Statement
Current As Of
July 24, 2012
Account Number
040-218-002-0055
Pollution Control
Mortgage Co. / Tax Agent Account
No

DEER PARK ENERGY CENTER
PROPERTY TAX DEPT
717 TEXAS ST STE 1000
HOUSTON TX 77002-2743

Taxing Jurisdiction	Exemption	Taxable Value	Tax Rate	Taxes
Deer Park ISD	38,416,600	0	1.396700	$0.00
Harris County	38,416,600	0	0.391170	$0.00
Harris County Flood Control Dist	38,416,600	0	0.028090	$0.00
Port of Houston Authority	38,416,600	0	0.018560	$0.00
Harris County Hospital District	38,416,600	0	0.192160	$0.00
Harris County Dept. of Education	38,416,600	0	0.006581	$0.00
San Jacinto College District	38,416,600	0	0.185602	$0.00
Total 2011 Taxes Due by January 31, 2012				$0.00
Payments applied to 2011 taxes				$0.00
Total Current Taxes Due				$0.00
Prior year(s) taxes due (if any)				$0.00
TOTAL AMOUNT DUE				**$0.00**

Penalties for Paying Late	Rate	Current	Delinquent	Total
By February 29, 2012	7%	$0.00	$0.00	$0.00
By March 31, 2012	9%	$0.00	$0.00	$0.00
By April 30, 2012	11%	$0.00	$0.00	$0.00
By May 31, 2012	13%	$0.00	$0.00	$0.00
By June 30, 2012	15%	$0.00	$0.00	$0.00

Property Description

TRS 1B 1B-3 1B-8 1B-10 1L 1N (IMPS ONLY)
2B 3 & 3C (LAND*0402180020019)
POLLUTION CONTROL
ABST 18 T EARLE
5600 HIGHWAY 225 77536

Appraised Value

Land - Market Value	0
Impr - Market Value	38,416,600
Total Market Value	38,416,600
Less Capped Mkt Value	0
Appraised Value	38,416,600

View five-year jurisdiction tax/value history
View 15 year tax/value history

Exemptions /Litigation

Pollution Control

Totals due may contain an additional section 33.11 collection penalty of 20%

5 year changes 2006-2011 (+/-) Appr Value: 104% Taxable Value: 0% Tax Rate: -10% Tax Bill: 0%

IF YOU ARE 65 YEARS OF AGE OR OLDER OR ARE DISABLED AND THE PROPERTY DESCRIBED IN THIS DOCUMENT IS YOUR RESIDENCE HOMESTEAD, YOU SHOULD CONTACT THE APPRAISAL DISTRICT REGARDING ANY ENTITLEMENT YOU MAY HAVE TO A POSTPONEMENT IN THE PAYMENT OF THESE TAXES.

Tax Receipt | Search 2011 Tax | Print | HCAD

H2B

7. FRONTERA GENERATION LIMITED PARTNERSHIP

Hidalgo CAD

Property Search Results > 625704 FRONTERA GENERATION LTD PTNSHP for Year 2012

Property

Account

Property ID: 625704
Geographic ID: 28688-90-990-0001-10
Type: Personal
Property Use Code:
Property Use Description:

Legal Description: FRONTERA ENERGY CENTER
Agent Code: ID:913028

Location

Address:
Neighborhood:
Neighborhood CD:

Mapsco:
Map ID:

Owner

Name: FRONTERA GENERATION LTD PTNSHP
Mailing Address: %DIR ENRGY ATTN:ANTHONY LIGATO
12 GREENWAY PLAZA STE 600
HOUSTON , TX 77046-0813

Owner ID: 930704
% Ownership: 100.0000000000%

Exemptions: PC

Values

			Ag / Timber Use Value
(+) Improvement Homesite Value:	+	$0	
(+) Improvement Non-Homesite Value:	+	$0	
(+) Land Homesite Value:	+	$0	
(+) Land Non-Homesite Value:	+	$0	
(+) Agricultural Market Valuation:	+	$0	$0
(+) Timber Market Valuation:	+	$0	$0
(=) Market Value:	=	$77,500,000	
(–) Ag or Timber Use Value Reduction:	–	$0	
(=) Appraised Value:	=	$77,500,000	
(–) HS Cap:	–	$0	
(=) Assessed Value:	=	$77,500,000	

Taxing Jurisdiction

Owner: FRONTERA GENERATION LTD PTNSHP
% Ownership: 100.0000000000%
Total Value: $77,500,000

Entity	Description	Tax Rate	Appraised Value	Taxable Value	Estimated Tax
CAD	APPRAISAL DISTRICT	0.000000	$77,500,000	$77,500,000	$0.00
CMS	CITY OF MISSION	0.538800	$77,500,000	$57,857,000	$311,733.52
DR1	DRAINAGE DISTRICT #1	0.073300	$77,500,000	$57,857,000	$42,409.18
GHD	HIDALGO COUNTY	0.590000	$77,500,000	$57,857,000	$341,356.30
JCC	SOUTH TEXAS COLLEGE	0.150700	$77,500,000	$57,857,000	$87,190.50
R05	ROAD DIST 05	0.000000	$77,500,000	$57,857,000	$0.00
SLJ	LA JOYA ISD	1.311000	$77,500,000	$57,857,000	$758,505.27
SST	SOUTH TEXAS SCHOOL	0.049200	$77,500,000	$57,857,000	$28,465.64

Total Tax Rate: 2.713000

Taxes w/Current Exemptions: $1,569,660.41

Taxes w/o Exemptions: $2,102,575.00

Improvement / Building

No improvements exist for this property.

Land

No land segments exist for this property.

Roll Value History

Year	Improvements	Land Market	Ag Valuation	Appraised	HS Cap	Assessed
2012	$0	$0	0	77,500,000	$0	$77,500,000
2011	$0	$0	0	78,700,000	$0	$78,700,000
2010	$0	$0	0	86,145,000	$0	$86,145,000
2009	$0	$0	0	91,000,000	$0	$91,000,000
2008	$0	$0	0	96,000,000	$0	$96,000,000
2007	$0	$0	0	98,000,000	$0	$98,000,000
2006	$0	$0	0	109,998,900	$0	$109,998,900
2005	$0	$0	0	116,045,890	$0	$116,045,890
2004	$0	$0	0	102,400,050	$0	$102,400,050
2003	$0	$0	0	142,886,130	$0	$142,886,130

Deed History - (Last 3 Deed Transactions)

#	Deed Date	Type	Description	Grantor	Grantee	Volume	Page	Deed Number

Tax Due

Property Tax Information as of 07/25/2012

Amount Due if Paid on:

Year	Taxing Jurisdiction	Taxable Value	Base Tax	Base Taxes Paid	Base Tax Due	Discount / Penalty & Interest	Attorney Fees	Amount Due

NOTE: Penalty & Interest accrues every month on the unpaid tax and is added to the balance. Attorney fees may also increase your tax liability if not paid by July 1. If you plan to submit payment on a future date, make sure you enter the date and RECALCULATE to obtain the correct total amount due.

Questions Please Call (956) 381-8466

Website version: 1.2.2.2

Database last updated on: 7/25/2012 6:17 AM

© 2012 True Automation, Inc. All Rights Reserved. Privacy Notice

This site only supports Internet Explorer 6+, Netscape 7+ and Firefox 1.5+.

8. GENTEX POWER CORPORATION

Bastrop Central Appraisal District

P O Drawer 578 Bastrop Texas 78602
(512) 303-1930 Telephone / (512) 303-4805 Fax

Property Detail Sheet (P88568)

History GIS Map Datasheet

Home
General Information
News
FAQ
Searches
- Property ID
- Owner
- Address
- Advanced Search

Property Data
- Detail Sheet
- History
- Datasheet

Other
- Taxing Units
- Abstracts
- Subdivisions
- GIS Maps
- Bastrop County Tax Offi
- Bastrop County Clerk
- Property Tax Code
- Housing Gap Rate
- Links
- Taxpayers Rights (Engli
- Taxpayers Rights (Span
- Utilities
- Contact Webmaster
- File an Online Protest

Owner Information

Owner ID:	O0001499
Owner Name:	GENTEX POWER CORP
Owner Address:	PROPERTY TAX DEPT P O BOX 220 AUSTIN,TX 78767-0220
Property Address:	256 POWER PLANT RD BASTROP, TX 78602

Parcel Information

Legal Description:	POLLUTION CONTROL EQUIP & IMPS (TCEQ 00-4886)
Neighborhood:	( )
Acreage:	
Cross Reference:	
Undivided Interest:	
Exemption Codes:	PC (Pollution Control)
Entity Codes:	G01 (Bastrop County) RD1 (County Road) S04 (Bastrop ISD) ESD2 (Bastrop County Emergency Svc Dist #2)
Deed Type:	
Deed Book:	
Deed Page:	
Map Page:	

Values Breakdown	2012 Value
Land HS:	$0 +
Land NHS:	$0 +
Improvement HS:	$0 +
Improvement NHS:	$6,996,800 +
Ag Market:	$0
Ag Use:	$0 +
Timber Market:	$0
Timber Use:	$0 +
Assessed:	$6,996,800 =

Get Adobe Reader
A recent version of Adobe Acrobat Reader is required to view PDF documents. Acrobat Reader is a free program available here.

Bastrop Central Appraisal District
P O Drawer 578 Bastrop Texas 78602
(512) 303-1930 Telephone / (512) 303-4805 Fax

Home
General Information
News
FAQ
Searches
- Property ID
- Owner
- Address
- Advanced Search

Property Data
- Detail Sheet
- History
- Datasheet

Other
- Taxing Units
- Abstracts
- Subdivisions
- GIS Maps
- Bastrop County Tax Offi
- Bastrop County Clerk
- Property Tax Code
- Housing Cap Rate
- Links
- Taxpayers Rights (Engli
- Taxpayers Rights (Span
- Utilities
- Contact Webmaster
- File an Online Protest

Assessment History (P88558)

XRef ID

Situs Address
256 POWER PLANT RD
BASTROP, TX 78602

	2011	2010	2009	2008
Improvement HS	$0	$0	$0	$0
Improvement NHS	$6,800,100	$6,312,800	$6,603,000	$6,441,490
Land HS	$0	$0	$0	$0
Land NHS	$0	$0	$0	$0
Agricultural Mkt	$0	$0	$0	$0
Agricultural Use	$0	$0	$0	$0
Timber Market	$0	$0	$0	$0
Timber Use	$0	$0	$0	$0
Market Value	$0	$0	$0	$0
Homestead Limit				
Assessed	$6,800,100	$6,312,800	$6,603,000	$6,441,490
Exemptions	PC	PC	PC	PC

Current Owner	Legal Description	Exemptions	Market
GENTEX POWER CORP (O0001499) PROPERTY TAX DEPT P O BOX 220 AUSTIN,TX 78767-0220	POLLUTION CONTROL EQUIP & IMPS (TCEQ 00-4886)	PC	
		Entities	**Assessed**
		G01, RD1, S04, ESD2	

Situs Address

256 POWER PLANT RD
BASTROP, TX 78602

Sales

Date	Volume	Page	Seller Name
01/02/2004			CALPINE CORP

History Information

	2012	2011	2010	2009
Imp HS	-	-	-	-
Imp NHS	$6,996,800	$6,800,100	$6,312,800	$6,603,000
Land HS	-	-	-	-
Land NHS	-	-	-	-
Ag Mkt	-	-	-	-
Ag Use	-	-	-	-
Tim Mkt	-	-	-	-
Tim Use	-	-	-	-
HS Cap	-	-	-	-
Assessed	$6,996,800	$6,800,100	$6,312,800	$6,603,000

Building Attributes

Construction	Foundation	Exterior	Interior	Roof	Flooring
Heat/AC	**Baths**	**Fireplace**	**Year Built**	**Rooms**	**Bedrooms**

Land Segments

SPTB	Description	Area	Market	Ag Value

Improvements

Type	Description	Area	Year Built	Eff Year	Value

Bastrop Central Appraisal District

P O Drawer 578 Bastrop Texas 78602
(512) 303-1930 Telephone / (512) 303-4805 Fax

Property Detail Sheet (P113997)

History GIS Map Datasheet

Home
General Information
News
FAQ
Searches
- Property ID
- Owner
- Address
- Advanced Search

Property Data
- Detail Sheet
- History
- Datasheet

Other
- Taxing Units
- Abstracts
- Subdivisions
- GIS Maps
- Bastrop County Tax Offi
- Bastrop County Clerk
- Property Tax Code
- Housing Cap Rate
- Links
- Taxpayers Rights (Engli
- Taxpayers Rights (Span
- Utilities
- Contact Webmaster
- File an Online Protest

Owner Information

Owner ID:	O0001499
Owner Name:	GENTEX POWER CORP
Owner Address:	PROPERTY TAX DEPT P O BOX 220 AUSTIN,TX 78767-0220
Property Address:	256 POWER PLANT RD BASTROP, TX 78602

Parcel Information

Legal Description:	POLLUTION CONTROL EQUIPMENT - TCEQ 00-4886 & 07-11964,TCEQ 07-11963
Neighborhood:	( )
Acreage:	
Cross Reference:	
Undivided Interest:	
Exemption Codes:	PC (Pollution Control)
Entity Codes:	G01 (Bastrop County) RD1 (County Road) S04 (Bastrop ISD) ESD2 (Bastrop County Emergency Svc Dist #2)
Deed Type:	
Deed Book:	
Deed Page:	
Map Page:	

Values Breakdown	2012 Value
Land HS:	$0 +
Land NHS:	$0 +
Improvement HS:	$0 +
Improvement NHS:	$17,065,900 +
Ag Market:	$0
Ag Use:	$0 +
Timber Market:	$0
Timber Use:	$0 +
Assessed:	$17,065,900 =

Get Adobe Reader

A recent version of Adobe Acrobat Reader is required to view PDF documents. Acrobat Reader is a free program available here.

Bastrop Central Appraisal District
P O Drawer 578 Bastrop Texas 78602
(512) 303-1930 Telephone / (512) 303-4805 Fax

Home
General Information
News
FAQ
Searches
- Property ID
- Owner
- Address
- Advanced Search

Property Data
- Detail Sheet
- History
- Datasheet

Other
- Taxing Units
- Abstracts
- Subdivisions
- GIS Maps
- Bastrop County Tax Offi
- Bastrop County Clerk
- Property Tax Code
- Housing Cap Rate
- Links
- Taxpayers Rights (Engli
- Taxpayers Rights (Span
- Utilities
- Contact Webmaster
- File an Online Protest

Assessment History (P113997)

XRef ID

Situs Address
256 POWER PLANT RD
BASTROP, TX 78602

	2011	2010	2009	2008
Improvement HS	$0	$0	$0	$0
Improvement NHS	$16,603,900	$15,424,100	$18,490,640	$18,441,980
Land HS	$0	$0	$0	$0
Land NHS	$0	$0	$0	$0
Agricultural Mkt	$0	$0	$0	$0
Agricultural Use	$0	$0	$0	$0
Timber Market	$0	$0	$0	$0
Timber Use	$0	$0	$0	$0
Market Value	$0	$0	$0	$0
Homestead Limit				
Assessed	$16,603,900	$15,424,100	$18,490,640	$18,441,980
Exemptions	PC	PC	PC	PC

2012
P.113997

07/25/2012

Current Owner	Legal Description	Exemptions	Market
GENTEX POWER CORP (O0001499) PROPERTY TAX DEPT P O BOX 220 AUSTIN,TX 78767-0220	POLLUTION CONTROL EQUIPMENT - TCEQ 00-4886 & 07-11964,TCEQ 07-11963	PC	
		Entities	**Assessed**
		G01, RD1, S04, ESD2	

Situs Address

256 POWER PLANT RD
BASTROP, TX 78602

Sales

Date	Volume	Page	Seller Name

History Information

	2012	2011	2010	2009
Imp HS	-	-	-	-
Imp NHS	$17,065,900	$16,603,900	$15,424,100	$18,490,640
Land HS	-	-	-	-
Land NHS	-	-	-	-
Ag Mkt	-	-	-	-
Ag Use	-	-	-	-
Tim Mkt	-	-	-	-
Tim Use	-	-	-	-
HS Cap	-	-	-	-
Assessed	$17,065,900	$16,603,900	$15,424,100	$18,490,640

Building Attributes

Construction	Foundation	Exterior	Interior	Roof	Flooring

Heat/AC	Baths	Fireplace	Year Built	Rooms	Bedrooms

Land Segments

SPTB	Description	Area	Market	Ag Value

Improvements

Type	Description	Area	Year Built	Eff Year	Value

9. GOLDEN SPREAD ELECTRIC COOP

Yoakum CAD

Property Search Results > 168849 GOLDEN SPREAD ELECTRIC COOP for Year 2012

Property

Account

Property ID:	168849	Legal Description:	MUSTANG STATION-#1,2,3-PC
Geographic ID:	33894213050305	Agent Code:	ID:188372
Type:	Personal		
Property Use Code:			
Property Use Description:			

Location

Address:		Mapsco:	
Neighborhood:		Map ID:	
Neighborhood CD:			

Owner

Name:	GOLDEN SPREAD ELECTRIC COOP	Owner ID:	192267
Mailing Address:	P O BOX 9898 AMARILLO , TX 79105	% Ownership:	100.0000000000%
		Exemptions:	PC

Values

(+) Improvement Homesite Value:	+	N/A		
(+) Improvement Non-Homesite Value:	+	N/A		
(+) Land Homesite Value:	+	N/A		
(+) Land Non-Homesite Value:	+	N/A	Ag / Timber Use Value	
(+) Agricultural Market Valuation:	+	N/A		N/A
(+) Timber Market Valuation:	+	N/A		N/A
(=) Market Value:	=	N/A		
(–) Ag or Timber Use Value Reduction:	–	N/A		
(=) Appraised Value:	=	N/A		
(–) HS Cap:	–	N/A		
(=) Assessed Value:	=	N/A		

Taxing Jurisdiction

Owner: GOLDEN SPREAD ELECTRIC COOP
% Ownership: 100.0000000000%
Total Value: N/A

Entity	Description	Tax Rate	Appraised Value	Taxable Value	Estimated Tax
251	YOAKUM COUNTY	N/A	N/A	N/A	N/A
251R	YOAKUM FC & LR	N/A	N/A	N/A	N/A
251W	SANDYLAND UGWD	N/A	N/A	N/A	N/A
7	YOAKUM COUNTY APPRAISAL DIST	N/A	N/A	N/A	N/A
901S	DENVER CITY ISD	N/A	N/A	N/A	N/A
	Total Tax Rate:	N/A			

Taxes w/Current Exemptions:	N/A
Taxes w/o Exemptions:	N/A

Improvement / Building

No improvements exist for this property.

Land

No land segments exist for this property.

Roll Value History

Year	Improvements	Land Market	Ag Valuation	Appraised	HS Cap	Assessed
2012	N/A	N/A	N/A	N/A	N/A	N/A
2011	$0	$0	0	32,187,300	$0	$32,187,300
2010	$0	$0	0	36,547,300	$0	$36,547,300
2009	$0	$0	0	26,621,300	$0	$26,621,300
2008	$0	$0	0	26,504,800	$0	$26,504,800

Deed History - (Last 3 Deed Transactions)

#	Deed Date	Type	Description	Grantor	Grantee	Volume	Page	Deed Number

Tax Due

Property Tax Information as of 07/27/2012

Amount Due if Paid on:

Year	Taxing Jurisdiction	Taxable Value	Base Tax	Base Taxes Paid	Base Tax Due	Discount / Penalty & Interest	Attorney Fees	Amount Due
2011	YOAKUM COUNTY	$0	$0.00	$0.00	$0.00	$0.00	$0.00	$0.00
2011	YOAKUM FC & LR	$0	$0.00	$0.00	$0.00	$0.00	$0.00	$0.00
2011	SANDYLAND UGWD	$0	$0.00	$0.00	$0.00	$0.00	$0.00	$0.00
2011	DENVER CITY ISD	$0	$0.00	$0.00	$0.00	$0.00	$0.00	$0.00
	2011 TOTAL:		**$0.00**	**$0.00**	**$0.00**	**$0.00**	**$0.00**	**$0.00**
2010	YOAKUM COUNTY	$0	$0.00	$0.00	$0.00	$0.00	$0.00	$0.00
2010	YOAKUM FC & LR	$0	$0.00	$0.00	$0.00	$0.00	$0.00	$0.00
2010	SANDYLAND UGWD	$0	$0.00	$0.00	$0.00	$0.00	$0.00	$0.00
2010	DENVER CITY ISD	$0	$0.00	$0.00	$0.00	$0.00	$0.00	$0.00
	2010 TOTAL:		**$0.00**	**$0.00**	**$0.00**	**$0.00**	**$0.00**	**$0.00**
2009	YOAKUM COUNTY	$0	$0.00	$0.00	$0.00	$0.00	$0.00	$0.00
2009	YOAKUM FC & LR	$0	$0.00	$0.00	$0.00	$0.00	$0.00	$0.00
2009	SANDYLAND UGWD	$0	$0.00	$0.00	$0.00	$0.00	$0.00	$0.00
2009	DENVER CITY ISD	$0	$0.00	$0.00	$0.00	$0.00	$0.00	$0.00
	2009 TOTAL:		**$0.00**	**$0.00**	**$0.00**	**$0.00**	**$0.00**	**$0.00**
2008	YOAKUM COUNTY	$0	$0.00	$0.00	$0.00	$0.00	$0.00	$0.00
2008	YOAKUM FC & LR	$0	$0.00	$0.00	$0.00	$0.00	$0.00	$0.00
2008	SANDYLAND UGWD	$0	$0.00	$0.00	$0.00	$0.00	$0.00	$0.00
2008	DENVER CITY ISD	$0	$0.00	$0.00	$0.00	$0.00	$0.00	$0.00
2008	DENVER CITY ISD BPP	$0	$0.00	$0.00	$0.00	$0.00	$0.00	$0.00
2008	YOAKUM CAD BPP	$0	$0.00	$0.00	$0.00	$0.00	$0.00	$0.00
2008	YOAKUM FC&LR BPP	$0	$0.00	$0.00	$0.00	$0.00	$0.00	$0.00
2008	SANDYLAND BPP	$0	$0.00	$0.00	$0.00	$0.00	$0.00	$0.00
2008	YOAKUM COUNTY BPP	$0	$0.00	$0.00	$0.00	$0.00	$0.00	$0.00
	2008 TOTAL:		**$0.00**	**$0.00**	**$0.00**	**$0.00**	**$0.00**	**$0.00**

NOTE: Penalty & Interest accrues every month on the unpaid tax and is added to the balance. Attorney fees may also increase your tax liability if not paid by July 1. If you plan to submit payment on a future date, make sure you enter the date and RECALCULATE to obtain the correct total amount due.

Questions Please Call (806) 456-7101

This year is not certified and ALL values will be represented with "N/A".

Website version: 1.2.2.2

Database last updated on: 7/18/2012 4:52 AM

© 2012 True Automation, Inc. All Rights Reserved. Privacy Notice

This site only supports Internet Explorer 6+, Netscape 7+ and Firefox 1.5+.

10. GUADALUPE POWER PARTNERS, LP

Guadalupe CAD

Property Search Results > 74251 GUADALUPE POWER PRTNRS LP for Year 2012

Property

Account

Property ID: 74251
Geographic ID: 7G0002-9670-00020-4-01
Type: Real
Property Use Code:
Property Use Description:

Legal Description: POLLUTION CONTROL EQUIPMENT TCEQ 00-5464 5470 WEIL RD MARION TX
Agent Code: ID:127571

Location

Address: 5470 WEIL RD
MARION, TX 78124

Mapsco:

Neighborhood:
Neighborhood CD:

Map ID:

Owner

Name: GUADALUPE POWER PRTNRS LP
Mailing Address: C/O NAVASOTA ENERGY PARTNERS LP ATTN: KURT KELLER
403 CORPORATE WOODS
MAGNOLIA, TX 77354

Owner ID: 148644
% Ownership: 100.0000000000%

Exemptions: PC

Values

(+) Improvement Homesite Value:	+	N/A		
(+) Improvement Non-Homesite Value:	+	N/A		
(+) Land Homesite Value:	+	N/A		
(+) Land Non-Homesite Value:	+	N/A	Ag / Timber Use Value	
(+) Agricultural Market Valuation:	+	N/A		N/A
(+) Timber Market Valuation:	+	N/A		N/A
(=) Market Value:	=	N/A		
(–) Ag or Timber Use Value Reduction:	–	N/A		
(=) Appraised Value:	=	N/A		
(–) HS Cap:	–	N/A		
(=) Assessed Value:	=	N/A		

Taxing Jurisdiction

Owner: GUADALUPE POWER PRTNRS LP
% Ownership: 100.0000000000%
Total Value: N/A

Entity	Description	Tax Rate	Appraised Value	Taxable Value	Estimated Tax
CAD	APPRAISAL DISTRICT	N/A	N/A	N/A	N/A
GCO	GUADALUPE COUNTY	N/A	N/A	N/A	N/A
LTR	LATERAL ROAD	N/A	N/A	N/A	N/A
MAS	MARION ISD	N/A	N/A	N/A	N/A
	Total Tax Rate:	N/A			

Taxes w/Current Exemptions: N/A
Taxes w/o Exemptions: N/A

Improvement / Building

Improvement #1: COMMERCIAL State Code: F2 Living Area: sqft Value: N/A

Type	Description	Class CD	Exterior Wall	Year Built	SQFT
EQIP	EQUIPMENT	F/V		2001	0.0

Land

No land segments exist for this property.

Roll Value History

Year	Improvements	Land Market	Ag Valuation	Appraised	HS Cap	Assessed
2012	N/A	N/A	N/A	N/A	N/A	N/A
2011	$74,534,900	$0	0	74,534,900	$0	$74,534,900
2010	$52,911,500	$0	0	52,911,500	$0	$52,911,500
2009	$55,499,400	$0	0	55,499,400	$0	$55,499,400
2008	$39,960,340	$0	0	39,960,340	$0	$39,960,340
2007	$11,591,560	$0	0	11,591,560	$0	$11,591,560

Deed History - (Last 3 Deed Transactions)

#	Deed Date	Type	Description	Grantor	Grantee	Volume	Page	Deed Number

Questions Please Call (830) 303-3313

Website version: 1.2.2.2

Database last updated on: 7/16/2012 8:28 PM

© 2012 True Automation, Inc. All Rights Reserved. Privacy Notice

This site only supports Internet Explorer 6+, Netscape 7+ and Firefox 1.5+.

Guadalupe CAD

Property Search Results > 136478 GUADALUPE POWER PRTNRS LP for Year 2012

Property

Account

Property ID: 136478
Geographic ID: 7G0002-9670-00060-3-09
Type: Personal
Property Use Code:
Property Use Description:

Legal Description: POLLUTION CONTROL NOX BURNER SPARES TCEQ 01-6097 5470 WEIL RD MARION TX
Agent Code: ID:127571

Location

Address: 5470 WEIL RD
MARION, TX 78124
Neighborhood:
Neighborhood CD:

Mapsco:
Map ID:

Owner

Name: GUADALUPE POWER PRTNRS LP
Mailing Address: C/O NAVASOTA ENERGY PARTNERS LP ATTN: KURT KELLER
403 CORPORATE WOODS
MAGNOLIA, TX 77354

Owner ID: 148644
% Ownership: 100.0000000000%
Exemptions: PC

Values

(+) Improvement Homesite Value:	+	N/A	
(+) Improvement Non-Homesite Value:	+	N/A	
(+) Land Homesite Value:	+	N/A	
(+) Land Non-Homesite Value:	+	N/A	Ag / Timber Use Value
(+) Agricultural Market Valuation:	+	N/A	N/A
(+) Timber Market Valuation:	+	N/A	N/A
(=) Market Value:	=	N/A	
(–) Ag or Timber Use Value Reduction:	–	N/A	
(=) Appraised Value:	=	N/A	
(–) HS Cap:	–	N/A	
(=) Assessed Value:	=	N/A	

Taxing Jurisdiction

Owner: GUADALUPE POWER PRTNRS LP
% Ownership: 100.0000000000%
Total Value: N/A

Entity	Description	Tax Rate	Appraised Value	Taxable Value	Estimated Tax
CAD	APPRAISAL DISTRICT	N/A	N/A	N/A	N/A
GCO	GUADALUPE COUNTY	N/A	N/A	N/A	N/A
LTR	LATERAL ROAD	N/A	N/A	N/A	N/A
MAS	MARION ISD	N/A	N/A	N/A	N/A
	Total Tax Rate:	N/A			

Taxes w/Current Exemptions: N/A
Taxes w/o Exemptions: N/A

Improvement / Building

No improvements exist for this property.

Land

No land segments exist for this property.

Roll Value History

Year	Improvements	Land Market	Ag Valuation	Appraised	HS Cap	Assessed
2012	N/A	N/A	N/A	N/A	N/A	N/A
2011	$0	$0	0	2,778,539	$0	$2,778,539
2010	$0	$0	0	2,717,600	$0	$2,717,600
2009	$0	$0	0	2,717,600	$0	$2,717,600

Deed History - (Last 3 Deed Transactions)

#	Deed Date	Type	Description	Grantor	Grantee	Volume	Page	Deed Number

Questions Please Call (830) 303-3313

Website version: 1.2.2.2

Database last updated on: 7/16/2012 8:28 PM

© 2012 True Automation, Inc. All Rights Reserved. Privacy Notice

This site only supports Internet Explorer 6+, Netscape 7+ and Firefox 1.5+.

11. HAYS ENERGY LIMITED PARTNERSHIP

Hays Central Appraisal District

21001 NORTH IH 35, KYLE, TX 78640
(512) 268-2522 TELEPHONE / (512) 268-1945 FAX

Home
General Information
News
FAQ
Searches
- PropertyID Search
- Account Search
- Owner Search
- Address Search

Property Data
- Detail Sheet
- Datasheet

Other
- Taxing Units
- Neighborhoods
- Abstracts
- Subdivisions
- Directions
- Hays Tax Office
- Tax Rates
- Board of Directors
- ARB Members
- Low Income Housing
- Taxpayers Rights (Engli
- Taxpayers Rights (Span
- Delinquent Tax Sales
- Capitalization Rate
- Forms
- STATE FORMS
- Other Map Formats
- Links
- Subdivision Recorded P
- GIS Maps
- Employment opportuniti

Property Detail Sheet (R92852)

History GIS Map Datasheet

Owner Information

Owner ID:	O9133115
Owner Name:	HAYS ENERGY LIMITED PARTNERSHIP
Owner Address:	1990 POST OAK BLVD., STE 1900 HOUSTON,TX 77056
Property Address:	1201/1601 FRANCES HARRIS LN SAN MARCOS, TX 78666

Parcel Information

Legal Description:	HENK SUBD, Lot PT OF 1, ACRES 100.885, * CAP#105-2-000099-000001&5
Neighborhood:	( )
Acreage:	100.885
Cross Reference:	11-3732-0000-00100-3
Undivided Interest:	100%
Exemption Codes:	PC (Pollution Control)
Entity Codes:	CSM (CITY OF SAN MARCOS) GHA (HAYS COUNTY) RSP (SPECIAL ROAD) SSM (SAN MARCOS CISD) WEU (Edwards Undgr Water Dist) YCI (YORK CREEK IMPROVEMENT DIST)
Deed Type:	Quit Claim Deed
Deed Book:	HC9914621
Deed Page:	HC9914620
Map Page:	09704

Values Breakdown	2012 Value
Land HS:	$0 +
Land NHS:	$295,900 +
Improvement HS:	$0 +
Improvement NHS:	$228,910,450 +
Ag Market:	$0
Ag Use:	$0 +
Timber Market:	$0
Timber Use:	$0 +
Assessed:	$229,206,350 =

Improvements

ID	Type	SPTB	Segs	Value
Imp1	R (Residential)	J3 (J3-Electric Companies)	2	$ 25,140
Imp2	C (Commercial)	J3 (J3-Electric Companies)	1	$ 0
Imp3	I (Misc. Improvement)	J3 (J3-Electric Companies)	1	$ 12,560
Imp4	C (Commercial)	J3 (J3-Electric Companies)	1	$ 0

- Utility Consumption
- MAP 2011 REPORT

Imp5	C (Commercial)	J3 (J3-Electric Companies)	1	$ 0
Imp6	C (Commercial)	J3 (J3-Electric Companies)	1	$ 0
Imp7	C (Commercial)	J3 (J3-Electric Companies)	1	$ 0
Imp8	C (Commercial)	J3 (J3-Electric Companies)	1	$ 0
Imp9	C (Commercial)	J3 (J3-Electric Companies)	1	$ 0
Imp10	C (Commercial)	J3 (J3-Electric Companies)	1	$ 0
Imp11	C (Commercial)	J3 (J3-Electric Companies)	1	$ 0
Imp12	C (Commercial)	J3 (J3-Electric Companies)	1	$ 0
Imp13	C (Commercial)	J3 (J3-Electric Companies)	1	$ 0
Imp14	C (Commercial)	J3 (J3-Electric Companies)	1	$ 187,265,100
Imp15	C (Commercial)	J3 (J3-Electric Companies)	1	$ 41,607,650
Imp16	C (Commercial)	J3 (J3-Electric Companies)	0	$ 0

Land

ID	Type	SPTB	Acre	Market
Land1	IPG (IMPROVED PAST	J3 (J3-Electric Companies)	99.8	$ 292,970
Land2	J3 (J3)	J3 (J3-Electric Companies)	1.00	$ 2,930

Get Adobe Reader A recent version of Adobe Acrobat Reader is required to view PDF documents. Acrobat Reader is a free program available here.

Hays Central Appraisal District

21001 NORTH IH 35, KYLE, TX 78640
(512) 268-2522 TELEPHONE / (512) 268-1945 FAX

Home
General Information
News
FAQ
Searches
- PropertyID Search
- Account Search
- Owner Search
- Address Search

Property Data
- Detail Sheet
- Datasheet

Other
- Taxing Units
- Neighborhoods
- Abstracts
- Subdivisions
- Directions
- Hays Tax Office
- Tax Rates
- Board of Directors
- ARB Members
- Low Income Housing
- Taxpayers Rights (Engli
- Taxpayers Rights (Span
- Delinquent Tax Sales
- Capitalization Rate
- Forms
- STATE FORMS
- Other Map Formats
- Links
- Subdivision Recorded Pl
- GIS Maps
- Employment opportuniti
- Utility Consumption
- MAP 2011 REPORT

Assessment History (R92852)

XRef ID
11-3732-0000-00100-3

Situs Address
1201/1601 FRANCES HARRIS LN
SAN MARCOS, TX 78666

	2011	2010	2009	2008
Improvement HS	$0	$0	$0	$0
Improvement NHS	$232,428,700	$220,542,800	$259,431,590	$260,825,860
Land HS	$0	$0	$0	$0
Land NHS	$295,900	$295,900	$154,280	$154,280
Agricultural Mkt	$0	$0	$0	$0
Agricultural Use	$0	$0	$0	$0
Timber Market	$0	$0	$0	$0
Timber Use	$0	$0	$0	$0
Market Value	$232,724,600	$220,838,700	$259,585,870	$260,980,140
Homestead Limit				
Assessed	$232,724,600	$220,838,700	$259,585,870	$260,980,140
Exemptions	PC	PC	PC	AB,PC

Current Owner	Legal Description	Exemptions	Market
HAYS ENERGY LIMITED PARTNERSHIP (O9133115) 1990 POST OAK BLVD., STE 1900 HOUSTON,TX 77056	HENK SUBD, Lot PT OF 1, ACRES 100.885, * CAP# 105-2-000099-000001&5	PC	229,206,350
		Entities	**Assessed**
		CSM, GHA, RSP, SSM, WEU, YCI	229,206,350

Situs Address

1201/1601 FRANCES HARRIS LN
SAN MARCOS, TX 78666

Sales

Date	Volume	Page	Seller Name
	HC9914621	HC9914620	HENK, BENNO

History Information

	2012	2011	2010	2009
Imp HS	$0	$0	$0	$0
Imp NHS	$228,910,450	$232,428,700	$220,542,800	$259,431,590
Land HS	$0	$0	$0	$0
Land NHS	$295,900	$295,900	$295,900	$154,280
Ag Mkt	$0	$0	$0	$0
Ag Use	$0	$0	$0	$0
Tim Mkt	$0	$0	$0	$0
Tim Use	$0	$0	$0	$0
HS Cap	-	-	-	-
Assessed	$229,206,350	$232,724,600	$220,838,700	$259,585,870

Building Attributes

Construction	Foundation	Exterior	Interior	Roof	Flooring

Heat/AC	Baths	Fireplace	Year Built	Rooms	Bedrooms
			1940		

Land Segments

SPTB	Description	Area	Market	Ag Value
J3	IMPROVED PASTURE GOC	99.88500	292,970	0
J3	J3	1.00000	2,930	0

Improvements

Type	Description	Area	Year Built	Eff Year	Value
R	Residential				$25,140
MA	Main Area	960	1940	1940	$19,140
GAR	Garage 50% Of Base				$6,000

Current Owner	Legal Description	Exemptions	Market
HAYS ENERGY LIMITED PARTNERSHIP (O9133115) 1990 POST OAK BLVD., STE 1900 HOUSTON,TX 77056	HENK SUBD, Lot PT OF 1, ACRES 100.885, * CAP# 105-2-000099-000001&5	PC	229,206,350
		Entities	**Assessed**
		CSM, GHA, RSP, SSM, WEU, YCI	229,206,350

Situs Address

1201/1601 FRANCES HARRIS LN
SAN MARCOS, TX 78666

Sales

Date	Volume	Page	Seller Name
	HC9914621	HC9914620	HENK, BENNO

History Information

	2012	2011	2010	2009
Imp HS	$0	$0	$0	$0
Imp NHS	$228,910,450	$232,428,700	$220,542,800	$259,431,590
Land HS	$0	$0	$0	$0
Land NHS	$295,900	$295,900	$295,900	$154,280
Ag Mkt	$0	$0	$0	$0
Ag Use	$0	$0	$0	$0
Tim Mkt	$0	$0	$0	$0
Tim Use	$0	$0	$0	$0
HS Cap	-	-	-	-
Assessed	$229,206,350	$232,724,600	$220,838,700	$259,585,870

Building Attributes

Construction	Foundation	Exterior	Interior	Roof	Flooring

Heat/AC	Baths	Fireplace	Year Built	Rooms	Bedrooms
			1999		

Land Segments

SPTB	Description	Area	Market	Ag Value
J3	IMPROVED PASTURE GOC	99.88500	292,970	0
J3	J3	1.00000	2,930	0

Improvements

Type	Description	Area	Year Built	Eff Year	Value
C	Commercial				$0
COMM	Comm 100% Of Base		1999	1999	$0

Current Owner	Legal Description	Exemptions	Market
HAYS ENERGY LIMITED PARTNERSHIP (O9133115) 1990 POST OAK BLVD., STE 1900 HOUSTON,TX 77056	HENK SUBD, Lot PT OF 1, ACRES 100.885, * CAP# 105-2-000099-000001&5	PC	229,206,350
		Entities	**Assessed**
		CSM, GHA, RSP, SSM, WEU, YCI	229,206,350

Situs Address

1201/1601 FRANCES HARRIS LN
SAN MARCOS, TX 78666

Sales

Date	Volume	Page	Seller Name
	HC9914621	HC9914620	HENK, BENNO

History Information

	2012	2011	2010	2009
Imp HS	$0	$0	$0	$0
Imp NHS	$228,910,450	$232,428,700	$220,542,800	$259,431,590
Land HS	$0	$0	$0	$0
Land NHS	$295,900	$295,900	$295,900	$154,280
Ag Mkt	$0	$0	$0	$0
Ag Use	$0	$0	$0	$0
Tim Mkt	$0	$0	$0	$0
Tim Use	$0	$0	$0	$0
HS Cap	-	-	-	-
Assessed	$229,206,350	$232,724,600	$220,838,700	$259,585,870

Building Attributes

Construction	Foundation	Exterior	Interior	Roof	Flooring

Heat/AC	Baths	Fireplace	Year Built	Rooms	Bedrooms
			1940		

Land Segments

SPTB	Description	Area	Market	Ag Value
J3	IMPROVED PASTURE GOC	99.88500	292,970	0
J3	J3	1.00000	2,930	0

Improvements

Type	Description	Area	Year Built	Eff Year	Value
I	Misc. Improvement				$12,560
FENCII	Fencing		1999	1999	$12,560

Current Owner	Legal Description	Exemptions	Market
HAYS ENERGY LIMITED PARTNERSHIP (O9133115) 1990 POST OAK BLVD., STE 1900 HOUSTON,TX 77056	HENK SUBD, Lot PT OF 1, ACRES 100.885, * CAP# 105-2-000099-000001&5	PC	229,206,350
		Entities	**Assessed**
		CSM, GHA, RSP, SSM, WEU, YCI	229,206,350

Situs Address

1201/1601 FRANCES HARRIS LN
SAN MARCOS, TX 78666

Sales

Date	Volume	Page	Seller Name
	HC9914621	HC9914620	HENK, BENNO

History Information

	2012	2011	2010	2009
Imp HS	$0	$0	$0	$0
Imp NHS	$228,910,450	$232,428,700	$220,542,800	$259,431,590
Land HS	$0	$0	$0	$0
Land NHS	$295,900	$295,900	$295,900	$154,280
Ag Mkt	$0	$0	$0	$0
Ag Use	$0	$0	$0	$0
Tim Mkt	$0	$0	$0	$0
Tim Use	$0	$0	$0	$0
HS Cap	-	-	-	-
Assessed	$229,206,350	$232,724,600	$220,838,700	$259,585,870

Building Attributes

Construction	Foundation	Exterior	Interior	Roof	Flooring

Heat/AC	Baths	Fireplace	Year Built	Rooms	Bedrooms
			2000		

Land Segments

SPTB	Description	Area	Market	Ag Value
J3	IMPROVED PASTURE GOC	99.88500	292,970	0
J3	J3	1.00000	2,930	0

Improvements

Type	Description	Area	Year Built	Eff Year	Value
C	Commercial				$0
COMM	Comm 100% Of Base		2000	2000	$0

Current Owner	Legal Description	Exemptions	Market
HAYS ENERGY LIMITED PARTNERSHIP (O9133115) 1990 POST OAK BLVD., STE 1900 HOUSTON,TX 77056	HENK SUBD, Lot PT OF 1, ACRES 100.885, * CAP# 105-2-000099-000001&5	PC	229,206,350
		Entities	**Assessed**
		CSM, GHA, RSP, SSM, WEU, YCI	229,206,350

Situs Address

1201/1601 FRANCES HARRIS LN
SAN MARCOS, TX 78666

Sales

Date	Volume	Page	Seller Name
	HC9914621	HC9914620	HENK, BENNO

History Information

	2012	2011	2010	2009
Imp HS	$0	$0	$0	$0
Imp NHS	$228,910,450	$232,428,700	$220,542,800	$259,431,590
Land HS	$0	$0	$0	$0
Land NHS	$295,900	$295,900	$295,900	$154,280
Ag Mkt	$0	$0	$0	$0
Ag Use	$0	$0	$0	$0
Tim Mkt	$0	$0	$0	$0
Tim Use	$0	$0	$0	$0
HS Cap	-	-	-	-
Assessed	$229,206,350	$232,724,600	$220,838,700	$259,585,870

Building Attributes

Construction	Foundation	Exterior	Interior	Roof	Flooring

Heat/AC	Baths	Fireplace	Year Built	Rooms	Bedrooms
			2000		

Land Segments

SPTB	Description	Area	Market	Ag Value
J3	IMPROVED PASTURE GOC	99.88500	292,970	0
J3	J3	1.00000	2,930	0

Improvements

Type	Description	Area	Year Built	Eff Year	Value
C	Commercial				$0
COMM	Comm 100% Of Base		2000	2000	$0

Current Owner	Legal Description	Exemptions	Market
HAYS ENERGY LIMITED PARTNERSHIP (O9133115) 1990 POST OAK BLVD., STE 1900 HOUSTON,TX 77056	HENK SUBD, Lot PT OF 1, ACRES 100.885, * CAP# 105-2-000099-000001&5	PC	229,206,350
		Entities	**Assessed**
		CSM, GHA, RSP, SSM, WEU, YCI	229,206,350

Situs Address

1201/1601 FRANCES HARRIS LN
SAN MARCOS, TX 78666

Sales

Date	Volume	Page	Seller Name
	HC9914621	HC9914620	HENK, BENNO

History Information

	2012	2011	2010	2009
Imp HS	$0	$0	$0	$0
Imp NHS	$228,910,450	$232,428,700	$220,542,800	$259,431,590
Land HS	$0	$0	$0	$0
Land NHS	$295,900	$295,900	$295,900	$154,280
Ag Mkt	$0	$0	$0	$0
Ag Use	$0	$0	$0	$0
Tim Mkt	$0	$0	$0	$0
Tim Use	$0	$0	$0	$0
HS Cap	-	-	-	-
Assessed	$229,206,350	$232,724,600	$220,838,700	$259,585,870

Building Attributes

Construction	Foundation	Exterior	Interior	Roof	Flooring

Heat/AC	Baths	Fireplace	Year Built	Rooms	Bedrooms
			2001		

Land Segments

SP.TB	Description	Area	Market	Ag Value
J3	IMPROVED PASTURE GOC	99.88500	292,970	0
J3	J3	1.00000	2,930	0

Improvements

Type	Description	Area	Year Built	Eff Year	Value
C	Commercial				$0
COMM	Comm 100% Of Base		2001	2001	$0

Current Owner	Legal Description	Exemptions	Market
HAYS ENERGY LIMITED PARTNERSHIP (O9133115) 1990 POST OAK BLVD., STE 1900 HOUSTON,TX 77056	HENK SUBD, Lot PT OF 1, ACRES 100.885, * CAP# 105-2-000099-000001&5	PC	229,206,350
		Entities	**Assessed**
		CSM, GHA, RSP, SSM, WEU, YCI	229,206,350

Situs Address

1201/1601 FRANCES HARRIS LN
SAN MARCOS, TX 78666

Sales

Date	Volume	Page	Seller Name
	HC9914621	HC9914620	HENK, BENNO

History Information

	2012	2011	2010	2009
Imp HS	$0	$0	$0	$0
Imp NHS	$228,910,450	$232,428,700	$220,542,800	$259,431,590
Land HS	$0	$0	$0	$0
Land NHS	$295,900	$295,900	$295,900	$154,280
Ag Mkt	$0	$0	$0	$0
Ag Use	$0	$0	$0	$0
Tim Mkt	$0	$0	$0	$0
Tim Use	$0	$0	$0	$0
HS Cap	-	-	-	-
Assessed	$229,206,350	$232,724,600	$220,838,700	$259,585,870

Building Attributes

Construction	Foundation	Exterior	Interior	Roof	Flooring

Heat/AC	Baths	Fireplace	Year Built	Rooms	Bedrooms
			2001		

Land Segments

SPTB	Description	Area	Market	Ag Value
J3	IMPROVED PASTURE GOC	99.88500	292,970	0
J3	J3	1.00000	2,930	0

Improvements

Type	Description	Area	Year Built	Eff Year	Value
C	Commercial				$0
COMM	Comm 100% Of Base		2001	2001	$0

Current Owner	Legal Description	Exemptions	Market
HAYS ENERGY LIMITED PARTNERSHIP (O9133115) 1990 POST OAK BLVD., STE 1900 HOUSTON,TX 77056	HENK SUBD, Lot PT OF 1, ACRES 100.885, * CAP# 105-2-000099-000001&5	PC	229,206,350
		Entities	**Assessed**
		CSM, GHA, RSP, SSM, WEU, YCI	229,206,350

Situs Address

1201/1601 FRANCES HARRIS LN
SAN MARCOS, TX 78666

Sales

Date	Volume	Page	Seller Name
	HC9914621	HC9914620	HENK, BENNO

History Information

	2012	2011	2010	2009
Imp HS	$0	$0	$0	$0
Imp NHS	$228,910,450	$232,428,700	$220,542,800	$259,431,590
Land HS	$0	$0	$0	$0
Land NHS	$295,900	$295,900	$295,900	$154,280
Ag Mkt	$0	$0	$0	$0
Ag Use	$0	$0	$0	$0
Tim Mkt	$0	$0	$0	$0
Tim Use	$0	$0	$0	$0
HS Cap	-	-	-	-
Assessed	$229,206,350	$232,724,600	$220,838,700	$259,585,870

Building Attributes

Construction	Foundation	Exterior	Interior	Roof	Flooring

Heat/AC	Baths	Fireplace	Year Built	Rooms	Bedrooms

Land Segments

SPTB	Description	Area	Market	Ag Value
J3	IMPROVED PASTURE GOC	99.88500	292,970	0
J3	J3	1.00000	2,930	0

Improvements

Type	Description	Area	Year Built	Eff Year	Value
C	Commercial				$0
COMM	Comm 100% Of Base				$0

Current Owner	Legal Description	Exemptions	Market
HAYS ENERGY LIMITED PARTNERSHIP (O9133115) 1990 POST OAK BLVD., STE 1900 HOUSTON,TX 77056	HENK SUBD, Lot PT OF 1, ACRES 100.885, * CAP# 105-2-000099-000001&5	PC	229,206,350
		Entities	**Assessed**
		CSM, GHA, RSP, SSM, WEU, YCI	229,206,350

Situs Address

1201/1601 FRANCES HARRIS LN
SAN MARCOS, TX 78666

Sales

Date	Volume	Page	Seller Name
	HC9914621	HC9914620	HENK, BENNO

History Information

	2012	2011	2010	2009
Imp HS	$0	$0	$0	$0
Imp NHS	$228,910,450	$232,428,700	$220,542,800	$259,431,590
Land HS	$0	$0	$0	$0
Land NHS	$295,900	$295,900	$295,900	$154,280
Ag Mkt	$0	$0	$0	$0
Ag Use	$0	$0	$0	$0
Tim Mkt	$0	$0	$0	$0
Tim Use	$0	$0	$0	$0
HS Cap	-	-	-	-
Assessed	$229,206,350	$232,724,600	$220,838,700	$259,585,870

Building Attributes

Construction	Foundation	Exterior	Interior	Roof	Flooring

Heat/AC	Baths	Fireplace	Year Built	Rooms	Bedrooms

Land Segments

SPTB	Description	Area	Market	Ag Value
J3	IMPROVED PASTURE GOC	99.88500	292,970	0
J3	J3	1.00000	2,930	0

Improvements

Type	Description	Area	Year Built	Eff Year	Value
C	Commercial				$0
COMM	Comm 100% Of Base				$0

Current Owner	Legal Description	Exemptions	Market
HAYS ENERGY LIMITED PARTNERSHIP (O9133115) 1990 POST OAK BLVD., STE 1900 HOUSTON,TX 77056	HENK SUBD, Lot PT OF 1, ACRES 100.885, * CAP# 105-2-000099-000001&5	PC	229,206,350
		Entities	**Assessed**
		CSM, GHA, RSP, SSM, WEU, YCI	229,206,350

Situs Address

1201/1601 FRANCES HARRIS LN
SAN MARCOS, TX 78666

Sales

Date	Volume	Page	Seller Name
	HC9914621	HC9914620	HENK, BENNO

History Information

	2012	2011	2010	2009
Imp HS	$0	$0	$0	$0
Imp NHS	$228,910,450	$232,428,700	$220,542,800	$259,431,590
Land HS	$0	$0	$0	$0
Land NHS	$295,900	$295,900	$295,900	$154,280
Ag Mkt	$0	$0	$0	$0
Ag Use	$0	$0	$0	$0
Tim Mkt	$0	$0	$0	$0
Tim Use	$0	$0	$0	$0
HS Cap	-	-	-	-
Assessed	$229,206,350	$232,724,600	$220,838,700	$259,585,870

Building Attributes

Construction	Foundation	Exterior	Interior	Roof	Flooring

Heat/AC	Baths	Fireplace	Year Built	Rooms	Bedrooms

Land Segments

SPTB	Description	Area	Market	Ag Value
J3	IMPROVED PASTURE GOC	99.88500	292,970	0
J3	J3	1.00000	2,930	0

Improvements

Type	Description	Area	Year Built	Eff Year	Value
C	Commercial				$0
COMM	Comm 100% Of Base				$0

Current Owner	Legal Description	Exemptions	Market
HAYS ENERGY LIMITED PARTNERSHIP (O9133115) 1990 POST OAK BLVD., STE 1900 HOUSTON,TX 77056	HENK SUBD, Lot PT OF 1, ACRES 100.885, * CAP# 105-2-000099-000001&5	PC	229,206,350
		Entities	**Assessed**
		CSM, GHA, RSP, SSM, WEU, YCI	229,206,350

Situs Address

1201/1601 FRANCES HARRIS LN
SAN MARCOS, TX 78666

Sales

Date	Volume	Page	Seller Name
	HC9914621	HC9914620	HENK, BENNO

History Information

	2012	2011	2010	2009
Imp HS	$0	$0	$0	$0
Imp NHS	$228,910,450	$232,428,700	$220,542,800	$259,431,590
Land HS	$0	$0	$0	$0
Land NHS	$295,900	$295,900	$295,900	$154,280
Ag Mkt	$0	$0	$0	$0
Ag Use	$0	$0	$0	$0
Tim Mkt	$0	$0	$0	$0
Tim Use	$0	$0	$0	$0
HS Cap	-	-	-	-
Assessed	$229,206,350	$232,724,600	$220,838,700	$259,585,870

Building Attributes

Construction	Foundation	Exterior	Interior	Roof	Flooring

Heat/AC	Baths	Fireplace	Year Built	Rooms	Bedrooms
			2000		

Land Segments

SPTB	Description	Area	Market	Ag Value
J3	IMPROVED PASTURE GOC	99.88500	292,970	0
J3	J3	1.00000	2,930	0

Improvements

Type	Description	Area	Year Built	Eff Year	Value
C	Commercial				$0
COMM	Comm 100% Of Base		2000	2000	$0

Current Owner	Legal Description	Exemptions	Market
HAYS ENERGY LIMITED PARTNERSHIP (O9133115) 1990 POST OAK BLVD., STE 1900 HOUSTON,TX 77056	HENK SUBD, Lot PT OF 1, ACRES 100.885, * CAP# 105-2-000099-000001&5	PC	229,206,350
		Entities	**Assessed**
		CSM, GHA, RSP, SSM, WEU, YCI	229,206,350

Situs Address

1201/1601 FRANCES HARRIS LN
SAN MARCOS, TX 78666

Sales

Date	Volume	Page	Seller Name
	HC9914621	HC9914620	HENK, BENNO

History Information

	2012	2011	2010	2009
Imp HS	$0	$0	$0	$0
Imp NHS	$228,910,450	$232,428,700	$220,542,800	$259,431,590
Land HS	$0	$0	$0	$0
Land NHS	$295,900	$295,900	$295,900	$154,280
Ag Mkt	$0	$0	$0	$0
Ag Use	$0	$0	$0	$0
Tim Mkt	$0	$0	$0	$0
Tim Use	$0	$0	$0	$0
HS Cap	-	-	-	-
Assessed	$229,206,350	$232,724,600	$220,838,700	$259,585,870

Building Attributes

Construction	Foundation	Exterior	Interior	Roof	Flooring

Heat/AC	Baths	Fireplace	Year Built	Rooms	Bedrooms

Land Segments

SPTB	Description	Area	Market	Ag Value
J3	IMPROVED PASTURE GOC	99.88500	292,970	0
J3	J3	1.00000	2,930	0

Improvements

Type	Description	Area	Year Built	Eff Year	Value
C	Commercial				$0
COMM	Comm 100% Of Base				$0

Current Owner	Legal Description	Exemptions	Market
HAYS ENERGY LIMITED PARTNERSHIP (O9133115) 1990 POST OAK BLVD., STE 1900 HOUSTON,TX 77056	HENK SUBD, Lot PT OF 1, ACRES 100.885, * CAP# 105-2-000099-000001&5	PC	229,206,350
		Entities	**Assessed**
		CSM, GHA, RSP, SSM, WEU, YCI	229,206,350

Situs Address

1201/1601 FRANCES HARRIS LN
SAN MARCOS, TX 78666

Sales

Date	Volume	Page	Seller Name
	HC9914621	HC9914620	HENK, BENNO

History Information

	2012	2011	2010	2009
Imp HS	$0	$0	$0	$0
Imp NHS	$228,910,450	$232,428,700	$220,542,800	$259,431,590
Land HS	$0	$0	$0	$0
Land NHS	$295,900	$295,900	$295,900	$154,280
Ag Mkt	$0	$0	$0	$0
Ag Use	$0	$0	$0	$0
Tim Mkt	$0	$0	$0	$0
Tim Use	$0	$0	$0	$0
HS Cap	-	-	-	-
Assessed	$229,206,350	$232,724,600	$220,838,700	$259,585,870

Building Attributes

Construction	Foundation	Exterior	Interior	Roof	Flooring

Heat/AC	Baths	Fireplace	Year Built	Rooms	Bedrooms
			2000		

Land Segments

SPTB	Description	Area	Market	Ag Value
J3	IMPROVED PASTURE GOC	99.88500	292,970	0
J3	J3	1.00000	2,930	0

Improvements

Type	Description	Area	Year Built	Eff Year	Value
C	Commercial				$0
COMM	Comm 100% Of Base		2000	2000	$0

Current Owner	Legal Description	Exemptions	Market
HAYS ENERGY LIMITED PARTNERSHIP (O9133115) 1990 POST OAK BLVD., STE 1900 HOUSTON,TX 77056	HENK SUBD, Lot PT OF 1, ACRES 100.885, * CAP# 105-2-000099-000001&5	PC	229,206,350
		Entities	**Assessed**
		CSM, GHA, RSP, SSM, WEU, YCI	229,206,350

Situs Address

1201/1601 FRANCES HARRIS LN
SAN MARCOS, TX 78666

Sales

Date	Volume	Page	Seller Name
	HC9914621	HC9914620	HENK, BENNO

History Information

	2012	2011	2010	2009
Imp HS	$0	$0	$0	$0
Imp NHS	$228,910,450	$232,428,700	$220,542,800	$259,431,590
Land HS	$0	$0	$0	$0
Land NHS	$295,900	$295,900	$295,900	$154,280
Ag Mkt	$0	$0	$0	$0
Ag Use	$0	$0	$0	$0
Tim Mkt	$0	$0	$0	$0
Tim Use	$0	$0	$0	$0
HS Cap	-	-	-	-
Assessed	$229,206,350	$232,724,600	$220,838,700	$259,585,870

Building Attributes

Construction	Foundation	Exterior	Interior	Roof	Flooring

Heat/AC	Baths	Fireplace	Year Built	Rooms	Bedrooms

Land Segments

SPTB	Description	Area	Market	Ag Value
J3	IMPROVED PASTURE GOC	99.88500	292,970	0
J3	J3	1.00000	2,930	0

Improvements

Type	Description	Area	Year Built	Eff Year	Value
C	Commercial				$187,265,100
COMM	Comm 100% Of Base				$187,265,100

Current Owner	Legal Description	Exemptions	Market
HAYS ENERGY LIMITED PARTNERSHIP (O9133115) 1990 POST OAK BLVD., STE 1900 HOUSTON,TX 77056	HENK SUBD, Lot PT OF 1, ACRES 100.885, * CAP# 105-2-000099-000001&5	PC	229,206,350
		Entities	**Assessed**
		CSM, GHA, RSP, SSM, WEU, YCI	229,206,350

Situs Address

1201/1601 FRANCES HARRIS LN
SAN MARCOS, TX 78666

Sales

Date	Volume	Page	Seller Name
	HC9914621	HC9914620	HENK, BENNO

History Information

	2012	2011	2010	2009
Imp HS	$0	$0	$0	$0
Imp NHS	$228,910,450	$232,428,700	$220,542,800	$259,431,590
Land HS	$0	$0	$0	$0
Land NHS	$295,900	$295,900	$295,900	$154,280
Ag Mkt	$0	$0	$0	$0
Ag Use	$0	$0	$0	$0
Tim Mkt	$0	$0	$0	$0
Tim Use	$0	$0	$0	$0
HS Cap	-	-	-	-
Assessed	$229,206,350	$232,724,600	$220,838,700	$259,585,870

Building Attributes

Construction	Foundation	Exterior	Interior	Roof	Flooring
Heat/AC	**Baths**	**Fireplace**	**Year Built**	**Rooms**	**Bedrooms**
			2000		

Land Segments

SPTB	Description	Area	Market	Ag Value
J3	IMPROVED PASTURE GOC	99.88500	292,970	0
J3	J3	1.00000	2,930	0

Improvements

Type	Description	Area	Year Built	Eff Year	Value
C	Commercial				$41,607,650
COMM	Comm 100% Of Base		2000	2000	$41,607,650
C	Commercial				$0

12. LAMAR POWER PARTNERS, LP

Lamar CAD

Property Search Results > 117980 LAMAR POWER PARTNERS LP for Year 2012

Property

Account

Property ID:	117980	Legal Description:	POLLUTION CONTROL PROJECTS TIER IV TCEQ 07-11917
Geographic ID:	139-2-009710-000033	Agent Code:	
Type:	Personal		
Property Use Code:			
Property Use Description:			

Location

Address:	3205 FM 137 TX	Mapsco:	
Neighborhood:		Map ID:	
Neighborhood CD:			

Owner

Name:	LAMAR POWER PARTNERS LP	Owner ID:	132766
Mailing Address:	PROPERTY TAX PSX/JB 700 UNIVERSE BLVD JUNO BEACH, FL 33408	% Ownership:	100.0000000000%
		Exemptions:	PC

Values

(+) Improvement Homesite Value:	+	$0		
(+) Improvement Non-Homesite Value:	+	$0		
(+) Land Homesite Value:	+	$0		
(+) Land Non-Homesite Value:	+	$0	Ag / Timber Use Value	
(+) Agricultural Market Valuation:	+	$0	$0	
(+) Timber Market Valuation:	+	$0	$0	
(=) Market Value:	=	$32,503,500		
(–) Ag or Timber Use Value Reduction:	–	$0		
(=) Appraised Value:	=	$32,503,500		
(–) HS Cap:	–	$0		
(=) Assessed Value:	=	$32,503,500		

Taxing Jurisdiction

Owner: LAMAR POWER PARTNERS LP
% Ownership: 100.0000000000%
Total Value: $32,503,500

Entity	Description	Tax Rate	Appraised Value	Taxable Value	Estimated Tax
CAD	Central Appraisal District	0.000000	$32,503,500	$32,503,500	$0.00
CPA	CITY OF PARIS	0.520000	$32,503,500	$0	$0.00
GLA	LAMAR COUNTY	0.419200	$32,503,500	$0	$0.00
JCP	PJC	0.190000	$32,503,500	$0	$0.00
SCH	CHISUM ISD	1.200000	$32,503,500	$0	$0.00
	Total Tax Rate:	2.329200			

Taxes w/Current Exemptions:	$0.00
Taxes w/o Exemptions:	$757,071.52

Improvement / Building

No improvements exist for this property.

Land

No land segments exist for this property.

Roll Value History

Year	Improvements	Land Market	Ag Valuation	Appraised	HS Cap	Assessed
2012	$0	$0	0	32,503,500	$0	$32,503,500
2011	$0	$0	0	31,556,760	$0	$31,556,760
2010	$0	$0	0	33,042,200	$0	$33,042,200
2009	$0	$0	0	36,037,200	$0	$36,037,200
2008	$0	$0	0	18,675,880	$0	$18,675,880

Deed History - (Last 3 Deed Transactions)

#	Deed Date	Type	Description	Grantor	Grantee	Volume	Page	Deed Number

Tax Due

Property Tax Information as of 07/24/2012

Amount Due if Paid on:

Year	Taxing Jurisdiction	Taxable Value	Base Tax	Base Taxes Paid	Base Tax Due	Discount / Penalty & Interest	Attorney Fees	Amount Due
2011	CITY OF PARIS	$0	$0.00	$0.00	$0.00	$0.00	$0.00	$0.00
2011	LAMAR COUNTY	$0	$0.00	$0.00	$0.00	$0.00	$0.00	$0.00
2011	PJC	$0	$0.00	$0.00	$0.00	$0.00	$0.00	$0.00
2011	CHISUM ISD	$0	$0.00	$0.00	$0.00	$0.00	$0.00	$0.00
	2011 TOTAL:		**$0.00**	**$0.00**	**$0.00**	**$0.00**	**$0.00**	**$0.00**
2010	CITY OF PARIS	$0	$0.00	$0.00	$0.00	$0.00	$0.00	$0.00
2010	LAMAR COUNTY	$0	$0.00	$0.00	$0.00	$0.00	$0.00	$0.00
2010	PJC	$0	$0.00	$0.00	$0.00	$0.00	$0.00	$0.00
2010	CHISUM ISD	$0	$0.00	$0.00	$0.00	$0.00	$0.00	$0.00
	2010 TOTAL:		**$0.00**	**$0.00**	**$0.00**	**$0.00**	**$0.00**	**$0.00**
2009	CITY OF PARIS	$0	$0.00	$0.00	$0.00	$0.00	$0.00	$0.00
2009	LAMAR COUNTY	$0	$0.00	$0.00	$0.00	$0.00	$0.00	$0.00
2009	PJC	$0	$0.00	$0.00	$0.00	$0.00	$0.00	$0.00
2009	CHISUM ISD	$0	$0.00	$0.00	$0.00	$0.00	$0.00	$0.00
	2009 TOTAL:		**$0.00**	**$0.00**	**$0.00**	**$0.00**	**$0.00**	**$0.00**
2008	CAD	$0	$0.00	$0.00	$0.00	$0.00	$0.00	$0.00
2008	CITY OF PARIS	$0	$0.00	$0.00	$0.00	$0.00	$0.00	$0.00
2008	LAMAR COUNTY	$0	$0.00	$0.00	$0.00	$0.00	$0.00	$0.00
2008	PARIS JUNIOR COLLEGE	$0	$0.00	$0.00	$0.00	$0.00	$0.00	$0.00
2008	CHISUM ISD	$0	$0.00	$0.00	$0.00	$0.00	$0.00	$0.00
2008	CITY OF PARIS	$0	$0.00	$0.00	$0.00	$0.00	$0.00	$0.00
2008	LAMAR COUNTY	$0	$0.00	$0.00	$0.00	$0.00	$0.00	$0.00
2008	PJC	$0	$0.00	$0.00	$0.00	$0.00	$0.00	$0.00
2008	CHISUM ISD	$0	$0.00	$0.00	$0.00	$0.00	$0.00	$0.00
	2008 TOTAL:		**$0.00**	**$0.00**	**$0.00**	**$0.00**	**$0.00**	**$0.00**

NOTE: Penalty & Interest accrues every month on the unpaid tax and is added to the balance. Attorney fees may also increase your tax liability if not paid by July 1. If you plan to submit payment on a future date, make sure you enter the date and RECALCULATE to obtain the correct total amount due.

Questions Please Call (903)-785-7822

Website version: 1.2.2.2

Database last updated on: 7/22/2012 8:13 PM

© 2012 True Automation, Inc. All Rights Reserved. Privacy Notice

This site only supports Internet Explorer 6+, Netscape 7+ and Firefox 1.5+.

Lamar CAD

Property Search Results > 117170 LAMAR POWER PARTNERS LP for Year 2012

Property

Account

Property ID:	117170	Legal Description:	POLLUTION CONTROL PROJECT TCEQ 06-10176
Geographic ID:	139-2-009710-000031	Agent Code:	
Type:	Real		
Property Use Code:			
Property Use Description:			

Location

Address:	3205 FM 137 TX	Mapsco:	
Neighborhood:		Map ID:	
Neighborhood CD:			

Owner

Name:	LAMAR POWER PARTNERS LP	Owner ID:	132766
Mailing Address:	PROPERTY TAX PSX/JB 700 UNIVERSE BLVD JUNO BEACH, FL 33408	% Ownership:	100.0000000000%
		Exemptions:	PC

Values

(+) Improvement Homesite Value:	+	$0		
(+) Improvement Non-Homesite Value:	+	$255,600		
(+) Land Homesite Value:	+	$0		
(+) Land Non-Homesite Value:	+	$0	Ag / Timber Use Value	
(+) Agricultural Market Valuation:	+	$0		$0
(+) Timber Market Valuation:	+	$0		$0
(=) Market Value:	=	$255,600		
(–) Ag or Timber Use Value Reduction:	–	$0		
(=) Appraised Value:	=	$255,600		
(–) HS Cap:	–	$0		
(=) Assessed Value:	=	$255,600		

Taxing Jurisdiction

Owner: LAMAR POWER PARTNERS LP
% Ownership: 100.0000000000%
Total Value: $255,600

Entity	Description	Tax Rate	Appraised Value	Taxable Value	Estimated Tax
CAD	Central Appraisal District	0.000000	$255,600	$0	$0.00
CPA	CITY OF PARIS	0.520000	$255,600	$0	$0.00
GLA	LAMAR COUNTY	0.419200	$255,600	$0	$0.00
JCP	PJC	0.190000	$255,600	$0	$0.00
SCH	CHISUM ISD	1.200000	$255,600	$0	$0.00
	Total Tax Rate:	2.329200			

Taxes w/Current Exemptions:	$0.00
Taxes w/o Exemptions:	$5,953.44

Improvement / Building

Improvement #1:	COMMERCIAL	State Code:	F2	Living Area:	sqft	Value:	$255,600

Land

No land segments exist for this property.

Roll Value History

Year	Improvements	Land Market	Ag Valuation	Appraised	HS Cap	Assessed
2012	$255,600	$0	0	255,600	$0	$255,600
2011	$248,160	$0	0	248,160	$0	$248,160
2010	$257,900	$0	0	257,900	$0	$257,900
2009	$281,200	$0	0	281,200	$0	$281,200
2008	$508,360	$0	0	508,360	$0	$508,360
2007	$721,360	$0	0	721,360	$0	$721,360

Deed History - (Last 3 Deed Transactions)

#	Deed Date	Type	Description	Grantor	Grantee	Volume	Page	Deed Number

Tax Due

Property Tax Information as of 07/24/2012

Amount Due if Paid on:

Year	Taxing Jurisdiction	Taxable Value	Base Tax	Base Taxes Paid	Base Tax Due	Discount / Penalty & Interest	Attorney Fees	Amount Due
2011	CITY OF PARIS	$0	$0.00	$0.00	$0.00	$0.00	$0.00	$0.00
2011	LAMAR COUNTY	$0	$0.00	$0.00	$0.00	$0.00	$0.00	$0.00
2011	PJC	$0	$0.00	$0.00	$0.00	$0.00	$0.00	$0.00
2011	CHISUM ISD	$0	$0.00	$0.00	$0.00	$0.00	$0.00	$0.00
	2011 TOTAL:		**$0.00**	**$0.00**	**$0.00**	**$0.00**	**$0.00**	**$0.00**
2010	CITY OF PARIS	$0	$0.00	$0.00	$0.00	$0.00	$0.00	$0.00
2010	LAMAR COUNTY	$0	$0.00	$0.00	$0.00	$0.00	$0.00	$0.00
2010	PJC	$0	$0.00	$0.00	$0.00	$0.00	$0.00	$0.00
2010	CHISUM ISD	$0	$0.00	$0.00	$0.00	$0.00	$0.00	$0.00
	2010 TOTAL:		**$0.00**	**$0.00**	**$0.00**	**$0.00**	**$0.00**	**$0.00**
2009	CITY OF PARIS	$0	$0.00	$0.00	$0.00	$0.00	$0.00	$0.00
2009	LAMAR COUNTY	$0	$0.00	$0.00	$0.00	$0.00	$0.00	$0.00
2009	PJC	$0	$0.00	$0.00	$0.00	$0.00	$0.00	$0.00
2009	CHISUM ISD	$0	$0.00	$0.00	$0.00	$0.00	$0.00	$0.00
	2009 TOTAL:		**$0.00**	**$0.00**	**$0.00**	**$0.00**	**$0.00**	**$0.00**
2008	CITY OF PARIS	$0	$0.00	$0.00	$0.00	$0.00	$0.00	$0.00
2008	LAMAR COUNTY	$0	$0.00	$0.00	$0.00	$0.00	$0.00	$0.00
2008	PJC	$0	$0.00	$0.00	$0.00	$0.00	$0.00	$0.00
2008	CHISUM ISD	$0	$0.00	$0.00	$0.00	$0.00	$0.00	$0.00
	2008 TOTAL:		**$0.00**	**$0.00**	**$0.00**	**$0.00**	**$0.00**	**$0.00**
2007	CITY OF PARIS	$0	$0.00	$0.00	$0.00	$0.00	$0.00	$0.00
2007	LAMAR COUNTY	$0	$0.00	$0.00	$0.00	$0.00	$0.00	$0.00
2007	PJC	$0	$0.00	$0.00	$0.00	$0.00	$0.00	$0.00
2007	CHISUM ISD	$0	$0.00	$0.00	$0.00	$0.00	$0.00	$0.00
	2007 TOTAL:		**$0.00**	**$0.00**	**$0.00**	**$0.00**	**$0.00**	**$0.00**

NOTE: Penalty & Interest accrues every month on the unpaid tax and is added to the balance. Attorney fees may also increase your tax liability if not paid by July 1. If you plan to submit payment on a future date, make sure you enter the date and RECALCULATE to obtain the correct total amount due.

Questions Please Call (903)-785-7822

Website version: 1.2.2.2

Database last updated on: 7/22/2012 8:13 PM

© 2012 True Automation, Inc. All Rights Reserved. Privacy Notice

This site only supports Internet Explorer 6+, Netscape 7+ and Firefox 1.5+.

Lamar CAD

Property Search Results > 117171 LAMAR POWER PARTNERS LP for Year 2012

Property

Account

Property ID:	117171	Legal Description:	POLLUTION CONTROL PROJECT TCEQ 06-10175
Geographic ID:	139-2-009710-000032	Agent Code:	
Type:	Real		
Property Use Code:			
Property Use Description:			

Location

Address:	3205 FM 137 TX	Mapsco:	
Neighborhood:		Map ID:	
Neighborhood CD:			

Owner

Name:	LAMAR POWER PARTNERS LP	Owner ID:	132766
Mailing Address:	PROPERTY TAX PSX/JB 700 UNIVERSE BLVD JUNO BEACH, FL 33408	% Ownership:	100.0000000000%
		Exemptions:	PC

Values

(+) Improvement Homesite Value:	+	$0		
(+) Improvement Non-Homesite Value:	+	$1,736,900		
(+) Land Homesite Value:	+	$0		
(+) Land Non-Homesite Value:	+	$0	Ag / Timber Use Value	
(+) Agricultural Market Valuation:	+	$0		$0
(+) Timber Market Valuation:	+	$0		$0
(=) Market Value:	=	$1,736,900		
(–) Ag or Timber Use Value Reduction:	–	$0		
(=) Appraised Value:	=	$1,736,900		
(–) HS Cap:	–	$0		
(=) Assessed Value:	=	$1,736,900		

Taxing Jurisdiction

Owner: LAMAR POWER PARTNERS LP
% Ownership: 100.0000000000%
Total Value: $1,736,900

Entity	Description	Tax Rate	Appraised Value	Taxable Value	Estimated Tax
CAD	Central Appraisal District	0.000000	$1,736,900	$0	$0.00
CPA	CITY OF PARIS	0.520000	$1,736,900	$0	$0.00
GLA	LAMAR COUNTY	0.419200	$1,736,900	$0	$0.00
JCP	PJC	0.190000	$1,736,900	$0	$0.00
SCH	CHISUM ISD	1.200000	$1,736,900	$0	$0.00
	Total Tax Rate:	2.329200			

Taxes w/Current Exemptions: $0.00
Taxes w/o Exemptions: $40,455.87

Improvement / Building

Improvement #1:	COMMERCIAL	State Code:	F2	Living Area:	sqft	Value:	$1,736,900

Land

No land segments exist for this property.

Roll Value History

Year	Improvements	Land Market	Ag Valuation	Appraised	HS Cap	Assessed
2012	$1,736,900	$0	0	1,736,900	$0	$1,736,900
2011	$1,686,280	$0	0	1,686,280	$0	$1,686,280
2010	$1,752,100	$0	0	1,752,100	$0	$1,752,100
2009	$1,910,900	$0	0	1,910,900	$0	$1,910,900
2008	$1,488,460	$0	0	1,488,460	$0	$1,488,460
2007	$2,347,430	$0	0	2,347,430	$0	$2,347,430

Deed History - (Last 3 Deed Transactions)

#	Deed Date	Type	Description	Grantor	Grantee	Volume	Page	Deed Number

Tax Due

Property Tax Information as of 07/24/2012

Amount Due if Paid on:

Year	Taxing Jurisdiction	Taxable Value	Base Tax	Base Taxes Paid	Base Tax Due	Discount / Penalty & Interest	Attorney Fees	Amount Due
2011	CITY OF PARIS	$0	$0.00	$0.00	$0.00	$0.00	$0.00	$0.00
2011	LAMAR COUNTY	$0	$0.00	$0.00	$0.00	$0.00	$0.00	$0.00
2011	PJC	$0	$0.00	$0.00	$0.00	$0.00	$0.00	$0.00
2011	CHISUM ISD	$0	$0.00	$0.00	$0.00	$0.00	$0.00	$0.00
	2011 TOTAL:		**$0.00**	**$0.00**	**$0.00**	**$0.00**	**$0.00**	**$0.00**
2010	CITY OF PARIS	$0	$0.00	$0.00	$0.00	$0.00	$0.00	$0.00
2010	LAMAR COUNTY	$0	$0.00	$0.00	$0.00	$0.00	$0.00	$0.00
2010	PJC	$0	$0.00	$0.00	$0.00	$0.00	$0.00	$0.00
2010	CHISUM ISD	$0	$0.00	$0.00	$0.00	$0.00	$0.00	$0.00
	2010 TOTAL:		**$0.00**	**$0.00**	**$0.00**	**$0.00**	**$0.00**	**$0.00**
2009	CITY OF PARIS	$0	$0.00	$0.00	$0.00	$0.00	$0.00	$0.00
2009	LAMAR COUNTY	$0	$0.00	$0.00	$0.00	$0.00	$0.00	$0.00
2009	PJC	$0	$0.00	$0.00	$0.00	$0.00	$0.00	$0.00
2009	CHISUM ISD	$0	$0.00	$0.00	$0.00	$0.00	$0.00	$0.00
	2009 TOTAL:		**$0.00**	**$0.00**	**$0.00**	**$0.00**	**$0.00**	**$0.00**
2008	CITY OF PARIS	$0	$0.00	$0.00	$0.00	$0.00	$0.00	$0.00
2008	LAMAR COUNTY	$0	$0.00	$0.00	$0.00	$0.00	$0.00	$0.00
2008	PJC	$0	$0.00	$0.00	$0.00	$0.00	$0.00	$0.00
2008	CHISUM ISD	$0	$0.00	$0.00	$0.00	$0.00	$0.00	$0.00
	2008 TOTAL:		**$0.00**	**$0.00**	**$0.00**	**$0.00**	**$0.00**	**$0.00**
2007	CITY OF PARIS	$0	$0.00	$0.00	$0.00	$0.00	$0.00	$0.00
2007	LAMAR COUNTY	$0	$0.00	$0.00	$0.00	$0.00	$0.00	$0.00
2007	PJC	$0	$0.00	$0.00	$0.00	$0.00	$0.00	$0.00
2007	CHISUM ISD	$0	$0.00	$0.00	$0.00	$0.00	$0.00	$0.00
	2007 TOTAL:		**$0.00**	**$0.00**	**$0.00**	**$0.00**	**$0.00**	**$0.00**

NOTE: Penalty & Interest accrues every month on the unpaid tax and is added to the balance. Attorney fees may also increase your tax liability if not paid by July 1. If you plan to submit payment on a future date, make sure you enter the date and RECALCULATE to obtain the correct total amount due.

Questions Please Call (903)-785-7822

Website version: 1.2.2.2

Database last updated on: 7/22/2012 8:13 PM

© 2012 True Automation, Inc. All Rights Reserved. Privacy Notice

This site only supports Internet Explorer 6+, Netscape 7+ and Firefox 1.5+.

Lamar CAD

Property Search Results > 400450 LAMAR POWER PARTNERS LP for Year 2012

Property

Account

Property ID: 400450
Geographic ID: 139-2-009710-000030
Type: Real
Property Use Code:
Property Use Description:

Legal Description: A313 L EWER SURVEY, TRACT 5, POLLUTION CONTROL PROJECTS TNRCC: 99-4551
Agent Code:

Location

Address: 3205 FM 137
TX

Mapsco:
Map ID:
Neighborhood:
Neighborhood CD:

Owner

Name: LAMAR POWER PARTNERS LP
Mailing Address: PROPERTY TAX PSX/JB
700 UNIVERSE BLVD
JUNO BEACH, FL 33408

Owner ID: 132766
% Ownership: 100.0000000000%
Exemptions: PC

Values

(+) Improvement Homesite Value:	+	$0		
(+) Improvement Non-Homesite Value:	+	$5,380,100		
(+) Land Homesite Value:	+	$0		
(+) Land Non-Homesite Value:	+	$0	Ag / Timber Use Value	
(+) Agricultural Market Valuation:	+	$0		$0
(+) Timber Market Valuation:	+	$0		$0
(=) Market Value:	=	$5,380,100		
(–) Ag or Timber Use Value Reduction:	–	$0		
(=) Appraised Value:	=	$5,380,100		
(–) HS Cap:	–	$0		
(=) Assessed Value:	=	$5,380,100		

Taxing Jurisdiction

Owner: LAMAR POWER PARTNERS LP
% Ownership: 100.0000000000%
Total Value: $5,380,100

Entity	Description	Tax Rate	Appraised Value	Taxable Value	Estimated Tax
CAD	Central Appraisal District	0.000000	$5,380,100	$5,380,100	$0.00
CPA	CITY OF PARIS	0.520000	$5,380,100	$0	$0.00
GLA	LAMAR COUNTY	0.419200	$5,380,100	$0	$0.00
JCP	PJC	0.190000	$5,380,100	$0	$0.00
SCH	CHISUM ISD	1.200000	$5,380,100	$0	$0.00
	Total Tax Rate:	2.329200			

Taxes w/Current Exemptions: $0.00
Taxes w/o Exemptions: $125,313.29

Improvement / Building

Improvement #1: COMMERCIAL State Code: F2 Living Area: 0.0 sqft Value: $5,380,100

Type	Description	Class CD	Exterior Wall	Year Built	SQFT
MA	MAIN AREA	SP		0	0.0

Land

No land segments exist for this property.

Roll Value History

Year	Improvements	Land Market	Ag Valuation	Appraised	HS Cap	Assessed
2012	$5,380,100	$0	0	5,380,100	$0	$5,380,100
2011	$5,223,420	$0	0	5,223,420	$0	$5,223,420
2010	$5,427,600	$0	0	5,427,600	$0	$5,427,600
2009	$5,919,500	$0	0	5,919,500	$0	$5,919,500
2008	$15,022,170	$0	0	15,022,170	$0	$15,022,170

2007	$14,691,940	$0	0	14,691,940	$0	$14,691,940
2006	$13,316,610	$0	0	13,316,610	$0	$13,316,610
2005	$12,783,940	$0	0	12,783,940	$0	$12,783,940
2004	$11,273,720	$0	0	11,273,720	$0	$11,273,720
2003	$11,525,600	$0	0	11,525,600	$0	$11,525,600
2002	$13,979,210	$0	0	13,979,210	$0	$13,979,210
2001	$12,612,920	$0	0	12,612,920	$0	$12,612,920
2000	$8,531,980	$0	0	8,531,980	$0	$8,531,980

Deed History - (Last 3 Deed Transactions)

#	Deed Date	Type	Description	Grantor	Grantee	Volume	Page	Deed Number

Tax Due

Property Tax information as of 07/24/2012

Amount Due if Paid on:

Year	Taxing Jurisdiction	Taxable Value	Base Tax	Base Taxes Paid	Base Tax Due	Discount / Penalty & Interest	Attorney Fees	Amount Due
2011	CITY OF PARIS	$0	$0.00	$0.00	$0.00	$0.00	$0.00	$0.00
2011	LAMAR COUNTY	$0	$0.00	$0.00	$0.00	$0.00	$0.00	$0.00
2011	PJC	$0	$0.00	$0.00	$0.00	$0.00	$0.00	$0.00
2011	CHISUM ISD	$0	$0.00	$0.00	$0.00	$0.00	$0.00	$0.00
	2011 TOTAL:		**$0.00**	**$0.00**	**$0.00**	**$0.00**	**$0.00**	**$0.00**
2010	CITY OF PARIS	$0	$0.00	$0.00	$0.00	$0.00	$0.00	$0.00
2010	LAMAR COUNTY	$0	$0.00	$0.00	$0.00	$0.00	$0.00	$0.00
2010	PJC	$0	$0.00	$0.00	$0.00	$0.00	$0.00	$0.00
2010	CHISUM ISD	$0	$0.00	$0.00	$0.00	$0.00	$0.00	$0.00
	2010 TOTAL:		**$0.00**	**$0.00**	**$0.00**	**$0.00**	**$0.00**	**$0.00**
2009	CITY OF PARIS	$0	$0.00	$0.00	$0.00	$0.00	$0.00	$0.00
2009	LAMAR COUNTY	$0	$0.00	$0.00	$0.00	$0.00	$0.00	$0.00
2009	PJC	$0	$0.00	$0.00	$0.00	$0.00	$0.00	$0.00
2009	CHISUM ISD	$0	$0.00	$0.00	$0.00	$0.00	$0.00	$0.00
	2009 TOTAL:		**$0.00**	**$0.00**	**$0.00**	**$0.00**	**$0.00**	**$0.00**
2008	CITY OF PARIS	$0	$0.00	$0.00	$0.00	$0.00	$0.00	$0.00
2008	LAMAR COUNTY	$0	$0.00	$0.00	$0.00	$0.00	$0.00	$0.00
2008	PJC	$0	$0.00	$0.00	$0.00	$0.00	$0.00	$0.00
2008	CHISUM ISD	$0	$0.00	$0.00	$0.00	$0.00	$0.00	$0.00
	2008 TOTAL:		**$0.00**	**$0.00**	**$0.00**	**$0.00**	**$0.00**	**$0.00**
2007	CITY OF PARIS	$0	$0.00	$0.00	$0.00	$0.00	$0.00	$0.00
2007	LAMAR COUNTY	$0	$0.00	$0.00	$0.00	$0.00	$0.00	$0.00
2007	PJC	$0	$0.00	$0.00	$0.00	$0.00	$0.00	$0.00
2007	CHISUM ISD	$0	$0.00	$0.00	$0.00	$0.00	$0.00	$0.00
	2007 TOTAL:		**$0.00**	**$0.00**	**$0.00**	**$0.00**	**$0.00**	**$0.00**
2006	CITY OF PARIS	$0	$0.00	$0.00	$0.00	$0.00	$0.00	$0.00
2006	LAMAR COUNTY	$0	$0.00	$0.00	$0.00	$0.00	$0.00	$0.00
2006	PJC	$0	$0.00	$0.00	$0.00	$0.00	$0.00	$0.00
2006	CHISUM ISD	$0	$0.00	$0.00	$0.00	$0.00	$0.00	$0.00
	2006 TOTAL:		**$0.00**	**$0.00**	**$0.00**	**$0.00**	**$0.00**	**$0.00**
2005	CITY OF PARIS	$0	$0.00	$0.00	$0.00	$0.00	$0.00	$0.00
2005	LAMAR COUNTY	$0	$0.00	$0.00	$0.00	$0.00	$0.00	$0.00
2005	PJC	$0	$0.00	$0.00	$0.00	$0.00	$0.00	$0.00
2005	CHISUM ISD	$0	$0.00	$0.00	$0.00	$0.00	$0.00	$0.00
	2005 TOTAL:		**$0.00**	**$0.00**	**$0.00**	**$0.00**	**$0.00**	**$0.00**
2004	CITY OF PARIS	$0	$0.00	$0.00	$0.00	$0.00	$0.00	$0.00
2004	LAMAR COUNTY	$0	$0.00	$0.00	$0.00	$0.00	$0.00	$0.00
2004	PJC	$0	$0.00	$0.00	$0.00	$0.00	$0.00	$0.00
2004	CHISUM ISD	$0	$0.00	$0.00	$0.00	$0.00	$0.00	$0.00
	2004 TOTAL:		**$0.00**	**$0.00**	**$0.00**	**$0.00**	**$0.00**	**$0.00**
2003	CITY OF PARIS	$0	$0.00	$0.00	$0.00	$0.00	$0.00	$0.00
2003	LAMAR COUNTY	$0	$0.00	$0.00	$0.00	$0.00	$0.00	$0.00
2003	PJC	$0	$0.00	$0.00	$0.00	$0.00	$0.00	$0.00
2003	CHISUM ISD	$0	$0.00	$0.00	$0.00	$0.00	$0.00	$0.00
	2003 TOTAL:		**$0.00**	**$0.00**	**$0.00**	**$0.00**	**$0.00**	**$0.00**
2002	CITY OF PARIS	$0	$0.00	$0.00	$0.00	$0.00	$0.00	$0.00
2002	LAMAR COUNTY	$0	$0.00	$0.00	$0.00	$0.00	$0.00	$0.00
2002	PJC	$0	$0.00	$0.00	$0.00	$0.00	$0.00	$0.00
2002	CHISUM ISD	$0	$0.00	$0.00	$0.00	$0.00	$0.00	$0.00

	2002 TOTAL:		**$0.00**	**$0.00**	**$0.00**	**$0.00**	**$0.00**	**$0.00**
2001	CITY OF PARIS	$0	$0.00	$0.00	$0.00	$0.00	$0.00	$0.00
2001	LAMAR COUNTY	$0	$0.00	$0.00	$0.00	$0.00	$0.00	$0.00
2001	PJC	$0	$0.00	$0.00	$0.00	$0.00	$0.00	$0.00
2001	CHISUM ISD	$0	$0.00	$0.00	$0.00	$0.00	$0.00	$0.00
	2001 TOTAL:		**$0.00**	**$0.00**	**$0.00**	**$0.00**	**$0.00**	**$0.00**
2000	CITY OF PARIS	$0	$0.00	$0.00	$0.00	$0.00	$0.00	$0.00
2000	LAMAR COUNTY	$0	$0.00	$0.00	$0.00	$0.00	$0.00	$0.00
2000	PJC	$0	$0.00	$0.00	$0.00	$0.00	$0.00	$0.00
2000	CHISUM ISD	$0	$0.00	$0.00	$0.00	$0.00	$0.00	$0.00
	2000 TOTAL:		**$0.00**	**$0.00**	**$0.00**	**$0.00**	**$0.00**	**$0.00**

NOTE: Penalty & Interest accrues every month on the unpaid tax and is added to the balance. Attorney fees may also increase your tax liability if not paid by July 1. If you plan to submit payment on a future date, make sure you enter the date and RECALCULATE to obtain the correct total amount due.

Questions Please Call (903)-785-7822

Website version: 1.2.2.2

Database last updated on: 7/22/2012 8:13 PM

© 2012 True Automation, Inc. All Rights Reserved.
Privacy Notice

This site only supports Internet Explorer 6+, Netscape 7+ and Firefox 1.5+.

13. MIDLOTHIAN ENERGY LIMITED PARTNERSHIP

Ellis CAD

Property Search Results > 144708 MIDLOTHIAN ENERGY LIMITED PARTNERSHIP for Year 2012

Property

Account

Property ID:	144708	Legal Description:	ELECTRIC CO PERSONAL PROP PARTNERSHIP
Geographic ID:	97.4910.099.001.54.108	Agent Code:	106
Type:	Personal		
Property Use Code:			
Property Use Description:			

Location

Address:	4601 BROOKHOLLOW DR MIDLOTHIAN, TX 76065	Mapsco:	C
Neighborhood:	BUSINESS PERSONAL PROPERTY	Map ID:	C
Neighborhood CD:	BPP		

Owner

Name:	MIDLOTHIAN ENERGY LIMITED PARTNERSHIP	Owner ID:	48778
Mailing Address:	4601 BROOKHOLLOW DR MIDLOTHIAN, TX 76065-5359	% Ownership:	100.0000000000%
		Exemptions:	PC

Values

(+) Improvement Homesite Value:	+	$0		
(+) Improvement Non-Homesite Value:	+	$0		
(+) Land Homesite Value:	+	$0		
(+) Land Non-Homesite Value:	+	$0	Ag / Timber Use Value	
(+) Agricultural Market Valuation:	+	$0	$0	
(+) Timber Market Valuation:	+	$0	$0	
(=) Market Value:	=	$53,935,360		
(–) Ag or Timber Use Value Reduction:	–	$0		
(=) Appraised Value:	=	$53,935,360		
(–) HS Cap:	–	$0		
(=) Assessed Value:	=	$53,935,360		

Taxing Jurisdiction

Owner: MIDLOTHIAN ENERGY LIMITED PARTNERSHIP
% Ownership: 100.0000000000%
Total Value: $53,935,360

Entity	Description	Tax Rate	Appraised Value	Taxable Value	Estimated Tax
070	ELLIS COUNTY	0.380091	$53,935,360	$44,608,360	$169,552.36
208	MIDLOTHIAN ISD	1.540000	$53,935,360	$44,608,360	$686,968.74
354	CITY OF MIDLOTHIAN	0.650000	$53,935,360	$44,608,360	$289,954.34
CAD	ELLIS CAD	0.000000	$53,935,360	$53,935,360	$0.00
R70	ELLIS COUNTY LATERAL ROAD	0.033508	$53,935,360	$44,608,360	$14,947.37
	Total Tax Rate:	2.603599			

Taxes w/Current Exemptions: $1,161,422.81
Taxes w/o Exemptions: $1,404,260.49

Improvement / Building

No improvements exist for this property.

Land

No land segments exist for this property.

Roll Value History

Year	Improvements	Land Market	Ag Valuation	Appraised	HS Cap	Assessed

2013	N/A	N/A	N/A	N/A	N/A	N/A
2012	$0	$0	0	53,935,360	$0	$53,935,360
2011	$0	$0	0	47,223,050	$0	$47,223,050
2010	$0	$0	0	49,074,820	$0	$49,074,820
2009	$0	$0	0	48,057,410	$0	$48,057,410
2008	$0	$0	0	51,078,990	$0	$51,078,990
2007	$0	$0	0	49,440,000	$0	$49,440,000
2006	$0	$0	0	45,840,000	$0	$45,840,000
2005	$0	$0	0	41,400,000	$0	$41,400,000
2004	$0	$0	0	43,200,000	$0	$43,200,000
2003	$0	$0	0	48,870,000	$0	$48,870,000
2002	$0	$0	0	58,456,780	$0	$58,456,780
2001	$0	$0	0	62,022,110	$0	$62,022,110

Deed History - (Last 3 Deed Transactions)

#	Deed Date	Type	Description	Grantor	Grantee	Volume	Page	Deed Number
1		OT	DO NOT USE	MIDLOTHIAN ENEF	MIDLOTHIAN ENEF			0
2		OT	DO NOT USE	MIDLOTHIAN ENEF	MIDLOTHIAN ENEF			0

Tax Due

Property Tax Information as of 07/26/2012

Amount Due if Paid on:

Year	Taxing Jurisdiction	Taxable Value	Base Tax	Base Taxes Paid	Base Tax Due	Discount / Penalty & Interest	Attorney Fees	Amount Due

NOTE: Penalty & Interest accrues every month on the unpaid tax and is added to the balance. Attorney fees may also increase your tax liability if not paid by July 1. If you plan to submit payment on a future date, make sure you enter the date and RECALCULATE to obtain the correct total amount due.

Questions Please Call (972) 937-3552

Website version: 1.2.2.2

Database last updated on: 7/22/2012 8:49 PM

© 2012 True Automation, Inc. All Rights Reserved. Privacy Notice

This site only supports Internet Explorer 6+, Netscape 7+ and Firefox 1.5+.

Ellis CAD

Property Search Results > 216908 MIDLOTHIAN ENERGY LIMITED PARTNERSHIP for Year 2012

Property

Account

Property ID:	216908	Legal Description:	1R A RAILPORT PH 1A 87.824 ACRES
Geographic ID:	54.7722.901.001.00.908	Agent Code:	106
Type:	Real		
Property Use Code:			
Property Use Description:			

Location

Address:	4601 BROOKHOLLOW DR MIDLOTHIAN, TX 76065	Mapsco:	1075-G
Neighborhood:	Commercial	Map ID:	4-9
Neighborhood CD:	COMM		

Owner

Name:	MIDLOTHIAN ENERGY LIMITED PARTNERSHIP	Owner ID:	44449
Mailing Address:	4601 BROOKHOLLOW DR MIDLOTHIAN, TX 76065-5359	% Ownership:	100.0000000000%
		Exemptions:	PC

Values

(+) Improvement Homesite Value:	+	$0		
(+) Improvement Non-Homesite Value:	+	$357,684,740		
(+) Land Homesite Value:	+	$0		
(+) Land Non-Homesite Value:	+	$1,194,410	Ag / Timber Use Value	
(+) Agricultural Market Valuation:	+	$0	$0	
(+) Timber Market Valuation:	+	$0	$0	
(=) Market Value:	=	$358,879,150		
(–) Ag or Timber Use Value Reduction:	–	$0		
(=) Appraised Value:	=	$358,879,150		
(–) HS Cap:	–	$0		
(=) Assessed Value:	=	$358,879,150		

Taxing Jurisdiction

Owner: MIDLOTHIAN ENERGY LIMITED PARTNERSHIP
% Ownership: 100.0000000000%
Total Value: $358,879,150

Entity	Description	Tax Rate	Appraised Value	Taxable Value	Estimated Tax
070	ELLIS COUNTY	0.380091	$358,879,150	$290,704,440	$1,104,941.41
208	MIDLOTHIAN ISD	1.540000	$358,879,150	$290,704,440	$4,476,848.38
354	CITY OF MIDLOTHIAN	0.650000	$358,879,150	$290,704,440	$1,889,578.86
CAD	ELLIS CAD	0.000000	$358,879,150	$358,879,150	$0.00
R70	ELLIS COUNTY LATERAL ROAD	0.033508	$358,879,150	$290,704,440	$97,409.24
	Total Tax Rate:	2.603599			
				Taxes w/Current Exemptions:	$7,568,777.89
				Taxes w/o Exemptions:	$9,343,773.96

Improvement / Building

Improvement #1: Commercial **State Code:** F2 **Living Area:** sqft **Value:** $357,684,740

Type	Description	Class CD	Exterior Wall	Year Built	SQFT
FLVO	DO NOT USE	FLT		1999	0.0

Land

#	Type	Description	Acres	Sqft	Eff Front	Eff Depth	Market Value	Prod. Value
1	R90	R90	87.8240	3825613.00	0.00	0.00	$1,194,410	$0

Roll Value History

Year	Improvements	Land Market	Ag Valuation	Appraised	HS Cap	Assessed
2013	N/A	N/A	N/A	N/A	N/A	N/A
2012	$357,684,740	$1,194,410	0	358,879,150	$0	$358,879,150
2011	$296,245,590	$1,194,410	0	297,440,000	$0	$297,440,000
2010	$310,321,210	$1,194,410	0	311,515,620	$0	$311,515,620
2009	$351,226,580	$1,194,410	0	352,420,990	$0	$352,420,990
2008	$373,384,840	$1,194,410	0	374,579,250	$0	$374,579,250
2007	$361,365,600	$1,194,400	0	362,560,000	$0	$362,560,000
2006	$334,965,600	$1,194,400	0	336,160,000	$0	$336,160,000
2005	$302,405,600	$1,194,400	0	303,600,000	$0	$303,600,000
2004	$315,605,600	$1,194,400	0	316,800,000	$0	$316,800,000
2003	$364,920,340	$1,194,400	0	366,114,740	$0	$366,114,740
2002	$436,799,270	$1,194,400	0	437,993,670	$0	$437,993,670
2001	$453,549,870	$737,720	0	454,287,590	$0	$454,287,590

Deed History - (Last 3 Deed Transactions)

#	Deed Date	Type	Description	Grantor	Grantee	Volume	Page	Deed Number
1	11/19/1998 12:00:00 AM	OT	DO NOT USE	TXI OPERATIONS L	MIDLOTHIAN ENEF	1514	114	0
2	3/27/1998 12:00:00 AM	OT	DO NOT USE	TEXAS INDUSTRIE	TXI OPERATIONS L	1446	1240	0
3	5/31/1995 12:00:00 AM	OT	DO NOT USE	KEMP JAMES E ES	TEXAS INDUSTRIE	1165	128	0

Tax Due

Property Tax Information as of 07/26/2012

Amount Due if Paid on:

Year	Taxing Jurisdiction	Taxable Value	Base Tax	Base Taxes Paid	Base Tax Due	Discount / Penalty & Interest	Attorney Fees	Amount Due

NOTE: Penalty & Interest accrues every month on the unpaid tax and is added to the balance. Attorney fees may also increase your tax liability if not paid by July 1. If you plan to submit payment on a future date, make sure you enter the date and RECALCULATE to obtain the correct total amount due.

Questions Please Call (972) 937-3552

Website version: 1.2.2.2

Database last updated on: 7/22/2012 8:49 PM

© 2012 True Automation, Inc. All Rights Reserved. Privacy Notice

This site only supports Internet Explorer 6+, Netscape 7+ and Firefox 1.5+.

14. NRG TEXAS POWER, LLC

Thursday, July 26, 2012

Tax Year: 2012

HARRIS COUNTY APPRAISAL DISTRICT
REAL PROPERTY ACCOUNT INFORMATION
0401740000028

Print E-mail

Ownership History | Fiduciary Information

Owner and Property Information

Owner Name & Mailing Address:	**NRG TEXAS POWER LLC** **ATTN TAX DEPT** **211 CARNEGIE CTR** **PRINCETON NJ 08540-6213**	Legal Description:	**TRS 1 1A 2 3 3A 3J 4A 4B 8 & 9 (IMPS ONLY)(LAND*0002 & 007) (SAN JAC PLNT) PLTN CTRL ABST 5 E BRINSON**
		Property Address:	**845 SENS RD** **LA PORTE TX 77571**

State Class Code	Land Use Code	Building Class	Total Units
F2 -- Real, Industrial	3300 -- Industrial Imps Only	E	0

Land

Land Area	Total Living Area	Net Rentable Area	Neighborhood	Neighborhood Group	Market Area	Map Facet	Key Map®
0 SF	0	0	9701	0	4027	6155D	540J

Value Status Information

Capped Account	Value Status	Notice Date	Shared CAD
No	Noticed	06/01/2012	No

Exemptions and Jurisdictions

Exemption Type	Districts	Jurisdictions	ARB Status	2011 Rate	2012 Rate	Online Tax Bill
Pollution Control	020	LA PORTE ISD	Not Certified	1.355000		
	040	HARRIS COUNTY	Not Certified	0.391170		View
	041	HARRIS CO FLOOD CNTRL	Not Certified	0.028090		
	042	PORT OF HOUSTON AUTHY	Not Certified	0.018560		
	043	HARRIS CO HOSP DIST	Not Certified	0.192160		
	044	HARRIS CO EDUC DEPT	Not Certified	0.006581		
	047	SAN JACINTO COM COL D	Not Certified	0.185602		

Valuations

Value as of January 1, 2011	Market	Appraised	Value as of January 1, 2012	Market	Appraised
Land	0		Land	0	
Improvement	5,872,200		Improvement	6,141,400	
Total	5,872,200	5,872,200	Total	6,141,400	6,141,400

5-Year Value History

Land

Market Value Land

Line	Description	Site Code	Unit Type	Units	Size Factor	Site Factor	Appr O/R Factor	Appr O/R Reason	Total Adj	Unit Price	Adj Unit Price	Value
1	3300 -- Industrial Imps Only Land	--	GR	0	1.00	1.00	1.00	--	1.00	0.00	0.00	0

Building

(No Building Data)

Thursday, July 26, 2012

Tax Year: 2012

HARRIS COUNTY APPRAISAL DISTRICT
REAL PROPERTY ACCOUNT INFORMATION
0410020040099

Print E-mail

Ownership History | Fiduciary Information

Owner and Property Information

Owner Name & Mailing Address:	NRG TEXAS POWER LLC ATTN TAX DEPT 211 CARNEGIE CTR PRINCETON NJ 08540-6213	Legal Description:	PT TRS 1 & 1P (IMPS ONLY) (LAND*0410020040005) (POLLUTION CONTROL) ABST 46 A MCCORMICK
		Property Address:	2012 MILLER CUT OFF RD LA PORTE TX 77571

State Class Code	Land Use Code	Building Class	Total Units
F2 -- Real, Industrial	3300 -- Industrial Imps Only Land	E	0

Land Area	Total Living Area	Net Rentable Area	Neighborhood	Neighborhood Group	Market Area	Map Facet	Key Map®
0 SF	0	0	9001.04	0	4027	6156B	539D

Value Status Information

Capped Account	Value Status	Notice Date	Shared CAD
No	Noticed	06/01/2012	No

Exemptions and Jurisdictions

Exemption Type	Districts	Jurisdictions	ARB Status	2011 Rate	2012 Rate	Online Tax Bill
Pollution Control	002	DEER PARK ISD	Not Certified	1.396700		View
	040	HARRIS COUNTY	Not Certified	0.391170		View
	041	HARRIS CO FLOOD CNTRL	Not Certified	0.028090		
	042	PORT OF HOUSTON AUTHY	Not Certified	0.018560		
	043	HARRIS CO HOSP DIST	Not Certified	0.192160		
	044	HARRIS CO EDUC DEPT	Not Certified	0.006581		
	047	SAN JACINTO COM COL D	Not Certified	0.185602		

Valuations

Value as of January 1, 2011			Value as of January 1, 2012		
	Market	Appraised		Market	Appraised
Land	0		Land	0	
Improvement	5,900		Improvement	9,300	
Total	5,900	5,900	Total	9,300	9,300

5-Year Value History

Land

Market Value Land

Line	Description	Site Code	Unit Type	Units	Size Factor	Site Factor	Appr O/R Factor	Appr O/R Reason	Total Adj	Unit Price	Adj Unit Price	Value
1	3300 -- Industrial Imps Only Land	--	GR	0	1.00	1.00	1.00	--	1.00	0.00	0.00	0

Building

(No Building Data)

Thursday, July 26, 2012

Tax Year: 2012

HARRIS COUNTY APPRAISAL DISTRICT
REAL PROPERTY ACCOUNT INFORMATION
0410150010034

Print E-mail

Ownership History | Fiduciary Information

Owner and Property Information

Owner Name & Mailing Address:	**NRG TEXAS POWER LLC** **ATTN TAX DEPT** **211 CARNEGIE CTR** **PRINCETON NJ 08540-6213**	Legal Description:	**TR 14 (IMPS ONLY)** **(LAND*0410150010014)** **(POLLUTION CONTROL)** **ABST 59 REELS & TROBOUGH**
		Property Address:	**12070 OLD BEAUMONT HWY** **HOUSTON TX 77049**

State Class Code	Land Use Code	Building Class	Total Units
F2 -- Real, Industrial	3300 -- Industrial Imps Only Land	E	0

Land Area	Total Living Area	Net Rentable Area	Neighborhood	Neighborhood Group	Market Area	Map Facet	Key Map®
0 SF	0	0	9426	0	4018	5760D	456Q

Value Status Information

Capped Account	Value Status	Notice Date	Shared CAD
No	Noticed	06/01/2012	No

Exemptions and Jurisdictions

Exemption Type	Districts	Jurisdictions	ARB Status	2011 Rate	2012 Rate	Online Tax Bill
Pollution Control	015	GALENA PARK ISD	Not Certified	1.513400		
	040	HARRIS COUNTY	Not Certified	0.391170		View
	041	HARRIS CO FLOOD CNTRL	Not Certified	0.028090		
	042	PORT OF HOUSTON AUTHY	Not Certified	0.018560		
	043	HARRIS CO HOSP DIST	Not Certified	0.192160		
	044	HARRIS CO EDUC DEPT	Not Certified	0.006581		
	047	SAN JACINTO COM COL D	Not Certified	0.185602		
	061	CITY OF HOUSTON	Not Certified	0.638750		

Valuations

Value as of January 1, 2011	Market	Appraised	Value as of January 1, 2012	Market	Appraised
Land	0		Land	0	
Improvement	29,000		Improvement	33,700	
Total	29,000	29,000	Total	33,700	33,700

5-Year Value History

Land

Market Value Land

Line	Description	Site Code	Unit Type	Units	Size Factor	Site Factor	Appr O/R Factor	Appr O/R Reason	Total Adj	Unit Price	Adj Unit Price	Value
1	3300 -- Industrial Imps Only Land	--	GR	0	1.00	1.00	1.00	--	1.00	0.00	0.00	0

Building

(No Building Data)

Thursday, July 26, 2012

Tax Year: 2012

HARRIS COUNTY APPRAISAL DISTRICT
REAL PROPERTY ACCOUNT INFORMATION
0460430000334

Print E-mail

Ownership History | Fiduciary Information

Owner and Property Information

Owner Name & Mailing Address:	**NRG TEXAS POWER LLC** **ATTN TAX DEPT** **211 CARNEGIE CTR** **PRINCETON NJ 08540-6213**	Legal Description:	**PT TR 1B (IMPS ONLY)** **(LAND*0460430000040)** **(POLLUTION CONTROL)** **ABST 943 W H YORK**
		Property Address:	**16301 SH 249** **HOUSTON TX 77064**

State Class Code	Land Use Code	Building Class	Total Units
F2 -- Real, Industrial	3300 -- Industrial Imps Only Land	--	0

Land Area	Total Living Area	Net Rentable Area	Neighborhood	Neighborhood Group	Market Area	Map Facet	Key Map®
0 SF	0	0	9139.01	0	4029	4965D	370S

Value Status Information

Capped Account	Value Status	Notice Date	Shared CAD
No	Noticed	06/01/2012	No

Exemptions and Jurisdictions

Exemption Type	Districts	Jurisdictions	ARB Status	2011 Rate	2012 Rate	Online Tax Bill
Pollution Control	004	CYPRESS-FAIRBANKS ISD	Not Certified	1.430000		
	040	HARRIS COUNTY	Not Certified	0.391170		View
	041	HARRIS CO FLOOD CNTRL	Not Certified	0.028090		
	042	PORT OF HOUSTON AUTHY	Not Certified	0.018560		
	043	HARRIS CO HOSP DIST	Not Certified	0.192160		
	044	HARRIS CO EDUC DEPT	Not Certified	0.006581		
	045	LONE STAR COLLEGE SYS	Not Certified	0.121000		
	061	CITY OF HOUSTON	Not Certified	0.638750		

Valuations

Value as of January 1, 2011	Market	Appraised	Value as of January 1, 2012	Market	Appraised
Land	0		Land	0	
Improvement	1,050,400		Improvement	1,203,700	
Total	1,050,400	1,050,400	Total	1,203,700	1,203,700

5-Year Value History

Land

Market Value Land

Line	Description	Site Code	Unit Type	Units	Size Factor	Site Factor	Appr O/R Factor	Appr O/R Reason	Total Adj	Unit Price	Adj Unit Price	Value
1	3300 -- Industrial Imps Only Land	--	GR	0	1.00	1.00	1.00	--	1.00	0.00	0.00	0

Building

(No Building Data)

15. NRG TEXAS POWER, LLC (CEDAR BAYOU)

Chambers County Appraisal District

Chief Appraiser - Michael L. Fregia, RPA

Official Website
Hosted By Pritchard & Abbott, Inc.

General Mineral Property Details

New Property Search Go To Previous Page

Legal Information:
CEDAR BAYOU POWER PLANT
REAL NP
POLLUTION CONTROL PROJECTS

Account Number:
005225-000016

Operator:

Owner Information:
NRG TEXAS POWER LLC
ATTN: TAX DEPARTMENT
211 CARNEGIE CTR
PRINCETON NJ 08540 6213

Lease Information:	
RRC#:	
Category Code:	F2
Interest Type:	
Owner Interest:	1
Under 500:	No
Market Value:	0
Taxable Value:	0

Jur Code	Description	Total Market	Total Exemption	Taxable
01	CHAMBERS COUNTY	46,173,300	0	0
01R	CHAMBERS COUNTY ROAD	46,173,300	0	0
32	GOOSECREEK ISD	46,173,300	0	0
64	LEE COLLEGE	46,173,300	0	0
66	CEDAR BAYOU NAV	46,173,300	0	0

New Property Search Go To Previous Page

Real Estate Appraisal Information is the 2012 NOTICE Appraisal Values. © CHAMBERS COUNTY APPRAISAL DISTRICT | Last Data Update: 06/14/2012

PRITCHARD & ABBOTT, INC.
VALUATION CONSULTANTS

©2011 Pritchard & Abbott, Inc. - All rights reserved.
Version 1.7.6

16. ODESSA-ECTOR POWER PARTNERS

Ector County Appraisal District

1301 E 8th Street
Odessa, Texas 79761-4703

Phone:432-332-6834
Fax:432-332-1726
ector@ectorcad.org

Last Update-Appraisal Info: July 25, 2012
Last Update-Unpaid Tax Amounts: July 2, 2012 Payments made after this date are not reflected in UNPAID TAX AMOUNTS.

Navigation

Home

Search Real-Estate

Owner Name
Business Name
Address
Account Number
GIS Number
Subdivision
Township

Search Business Personal Property

Owner Name
Business Name
Address
Account Number
GIS Number

Search Mineral Property

Owner Name
Owner Number

Search Inactive Accts with Unpaid Taxes

Owner Name
Account Number

Property Tax Information

Board Messages
BPP Depreciation
Cap Rates
Homestead Exemption
Amounts
Confidential Information
Policy
Form List
Frequently Asked Questions
Taxpayer Alerts
House Bill 3693 Report
Protest Procedures
Tax Rates
Texas Taxes
Downloads
Holiday Schedule

View Details

The information listed below is a work in progress and is not certified as official. 2012 data is certified and 2012 tax amounts are estimates calculated on the preceding year's tax rates.

ORIGINAL TAX AMOUNTS are the original billed amounts and may not reflect adjustments made after October 1st for late-filed exemptions or corrections.

UNPAID TAX AMOUNTS are the balance due after all payments and adjustments (see the "Last Update-Unpaid Tax Amounts" date above).

The PAY NOW option is ONLY for payment of the total amount due. If you need to make a partial payment, visit www.certifiedpayments.net and use bureau code 4591785. You will need to enter your account number and the property location in addition to your credit card information.

Printable View

Account Number: 21664.00020.00000

Parcel Number: R100075831

PIN (GIS Mapping Number): 21664-00101-00102

Owner's Information

ODESSA-ECTOR POWER PARTNERS
ATTN SARAH SODERMAN CONTROLLER
100 CONSTITUTION PLAZA 10TH FLOOR
HARTFORD, CT 06103-1702

Property Location

E I H 20

YAHOO! LOCAL

Property Legal Description

ODESSA-ECTOR POWER
BLOCK 1
LOT 1 & T-2-S BLK 42 SEC 36 - 4.85 ACRES
REF FILE OP23B (OUTSIDE CITY)
ICD 13

Land Size

170.5800

Undivided Interest Percent

1.000000

Open All Details Close All Details

DEED & EXEMPTION INFORMATION

Name	Year	Date	Volume	Page	Exempt. Granted
ODESSA-ECTOR POWER PARTNERS	2012	1/19/2000			POL

IMPROVEMENT INFORMATION

Description	Year	SQFT	Value

O32M - OFFICE	2001	23000	$945,369
SM1M - MACH SHOP	2001	29000	$634,491
SM1M - MACH SHOP	2001	29000	$634,491
SM1M - MACH SHOP	2001	2500	$54,697
O12M - OFFICE	2009	2100	$197,774

PROPERTY VALUES

	2012	2011	2010	2009	2008
TOTAL IMPROVEMENT VALUE	$305,051,393	$299,656,280	$244,994,747	$249,656,280	$237,574,790
LAND MARKET VALUE	$341,160	$343,720	$343,720	$343,720	$343,720
PRODUCTIVITY VALUE	$0	$0	$0	$0	$0
TOTAL MARKET VALUE	$305,392,553	$300,000,000	$245,338,467	$250,000,000	$237,918,510
10% HOMESTEAD CAP LOSS	$0	$0	$0	$0	$0
APPRAISED VALUE	$305,392,553	$300,000,000	$245,338,467	$250,000,000	$237,918,510

JURISDICTION VALUES & TAX RATES

	2012 Value Tax Rate Tax Amt % Change	2011 Value Tax Rate Tax Amt % Change	2010 Value Tax Rate Tax Amt % Change	2009 Value Tax Rate Tax Amt % Change	2008 Value Tax Rate Tax Amt % Change
ECTOR COUNTY	$234,715,793 0.003564 $836,527.09 3.51%	$226,752,636 0.003564 $808,146.39 20.53%	$188,136,840 0.003564 $670,519.70 -2.27%	$191,654,452 0.003580 $686,122.94 N/A	$343,720 0.003580 N/A N/A
ECTOR COUNTY I S D	$234,715,793 0.011320 $2,656,982.78 3.51%	$226,752,636 0.011320 $2,566,839.84 20.21%	$188,136,840 0.011350 $2,135,353.13 -1.84%	$191,654,452 0.011350 $2,175,278.03 N/A	$182,419,149 0.011286 N/A N/A
ECTOR CO HOSPITAL DIST	$234,715,793 0.000521 $122,286.93 3.51%	$226,752,636 0.000521 $118,138.12 13.76%	$188,136,840 0.000552 $103,851.54 -7.21%	$191,654,452 0.000584 $111,926.20 N/A	$343,720 0.000577 N/A N/A
ODESSA COLLEGE	$234,715,793 0.001948 $457,226.36 3.51%	$226,752,636 0.001948 $441,714.13 48.22%	$188,136,840 0.001584 $298,008.75 -4.25%	$191,654,452 0.001624 $311,246.83 N/A	$343,720 0.001624 N/A N/A
ODESSA IND CONTRACT DIST	$0 0.000000 $0.00 0.00%	$0 0.000000 $0.00 0.00%	$0 0.000000 $0.00 0.00%	$0 0.000000 $0.00 N/A	$0 0.000000 N/A N/A
TOTAL CALCULATED TAX AMOUNT	$4,073,023.16	$3,934,838.49	$3,207,733.12	$3,284,574.00	N/A

ORIGINAL TAX AMOUNTS

Year	Balance	ISD	OC	COU	HOS	ODE	ECUD	GOL	FMLR	CED
2011	$3,934,686.56	$2,566,839.84	$441,668.78	$808,082.90	$118,095.04	$0.00	$0.00	$0.00	$0.00	$0.00

Copyright © 2011 - 2013 | All Rights Reserved

Developed & Maintained by LX Net Dev

Thursday, July 26, 2012

Tax Year: 2012

HARRIS COUNTY APPRAISAL DISTRICT
REAL PROPERTY ACCOUNT INFORMATION
0450020010196

Print E-mail

Ownership History | Fiduciary Information

Owner and Property Information

Owner Name & Mailing Address:	**PASADENA COGENERATION LP** **% CALPINE CORP** **4160 DUBLIN BLVD STE 100** **DUBLIN CA 94568-7755**	Legal Description:	**TRS 14A & 24T (IMPS ONLY)** **(LAND*0450020010194)** **(POLLUTION CONTROL)** **ABST 698 J SEYMOUR**
		Property Address:	**955 PHILLIPS RD** **PASADENA TX 77506**

State Class Code	Land Use Code	Building Class	Total Units
F2 -- Real, Industrial	3300 -- Industrial Imps Only	--	0

Land

Land Area	Total Living Area	Net Rentable Area	Neighborhood	Neighborhood Group	Market Area	Map Facet	Key Map®
0 SF	0	0	9000	0	4027	5856D	537B

Value Status Information

Capped Account	Value Status	Notice Date	Shared CAD
No	Noticed	06/01/2012	No

Exemptions and Jurisdictions

Exemption Type	Districts	Jurisdictions	ARB Status	2011 Rate	2012 Rate	Online Tax Bill
Pollution Control	002	DEER PARK ISD	Not Certified	1.396700		View
	040	HARRIS COUNTY	Not Certified	0.391170		View
	041	HARRIS CO FLOOD CNTRL	Not Certified	0.028090		
	042	PORT OF HOUSTON AUTHY	Not Certified	0.018560		
	043	HARRIS CO HOSP DIST	Not Certified	0.192160		
	044	HARRIS CO EDUC DEPT	Not Certified	0.006581		
	047	SAN JACINTO COM COL D	Not Certified	0.185602		

Valuations

	Value as of January 1, 2011			Value as of January 1, 2012	
	Market	Appraised		Market	Appraised
Land	0		Land	0	
Improvement	38,122,700		Improvement	39,885,600	
Total	38,122,700	38,122,700	Total	39,885,600	39,885,600

5-Year Value History

Land

Market Value Land

Line	Description	Site Code	Unit Type	Units	Size Factor	Site Factor	Appr O/R Factor	Appr O/R Reason	Total Adj	Unit Price	Adj Unit Price	Value
1	3300 -- Industrial Imps Only Land	--	GR	0	1.00	1.00	1.00	--	1.00	0.00	0.00	0

Building

(No Building Data)

17. PASADENA COGENERATION, LP

Thursday, July 26, 2012

Tax Year: 2012

HARRIS COUNTY APPRAISAL DISTRICT
REAL PROPERTY ACCOUNT INFORMATION
0450020010196

Print E-mail

Ownership History | Fiduciary Information

Owner and Property Information

Owner Name & Mailing Address:	**PASADENA COGENERATION LP** **% CALPINE CORP** **4160 DUBLIN BLVD STE 100** **DUBLIN CA 94568-7755**	Legal Description:	**TRS 14A & 24T (IMPS ONLY)** **(LAND*0450020010194)** **(POLLUTION CONTROL)** **ABST 698 J SEYMOUR**
		Property Address:	**955 PHILLIPS RD** **PASADENA TX 77506**

State Class Code	Land Use Code	Building Class	Total Units
F2 -- Real, Industrial	3300 -- Industrial Imps Only Land	--	0

Land Area	Total Living Area	Net Rentable Area	Neighborhood	Neighborhood Group	Market Area	Map Facet	Key Map®
0 SF	0	0	9000	0	4027	5856D	537B

Value Status Information

Capped Account	Value Status	Notice Date	Shared CAD
No	Noticed	06/01/2012	No

Exemptions and Jurisdictions

Exemption Type	Districts	Jurisdictions	ARB Status	2011 Rate	2012 Rate	Online Tax Bill
Pollution Control	002	DEER PARK ISD	Not Certified	1.396700		View
	040	HARRIS COUNTY	Not Certified	0.391170		View
	041	HARRIS CO FLOOD CNTRL	Not Certified	0.028090		
	042	PORT OF HOUSTON AUTHY	Not Certified	0.018560		
	043	HARRIS CO HOSP DIST	Not Certified	0.192160		
	044	HARRIS CO EDUC DEPT	Not Certified	0.006581		
	047	SAN JACINTO COM COL D	Not Certified	0.185602		

Valuations

Value as of January 1, 2011	Market	Appraised	Value as of January 1, 2012	Market	Appraised
Land	0		Land	0	
Improvement	38,122,700		Improvement	39,885,600	
Total	38,122,700	38,122,700	Total	39,885,600	39,885,600

5-Year Value History

Land

Market Value Land

Line	Description	Site Code	Unit Type	Units	Size Factor	Site Factor	Appr O/R Factor	Appr O/R Reason	Total Adj	Unit Price	Adj Unit Price	Value
1	3300 -- Industrial Imps Only Land	--	GR	0	1.00	1.00	1.00	--	1.00	0.00	0.00	0

Building

(No Building Data)

18. RIO NOGALES POWER PROJECT, LP

Guadalupe CAD

Property Search Results > 74289 RIO NOGALES POWER PROJECT LP for Year 2012

Property

Account

Property ID:	74289	Legal Description:	POLLUTION CONTROL PROJECT TNRCC 01-5679
Geographic ID:	7G0002-9770-00050-4-02	Agent Code:	ID:105021
Type:	Real		
Property Use Code:			
Property Use Description:			

Location

Address:		Mapsco:	
Neighborhood:		Map ID:	
Neighborhood CD:			

Owner

Name:	RIO NOGALES POWER PROJECT LP	Owner ID:	152577
Mailing Address:	C/O CPS ENERGY ATTN PAULA GOLD-WILLIAMS P O BOX 1771 SAN ANTONIO, TX 78296	% Ownership:	100.0000000000%
		Exemptions:	PC

Values

(+) Improvement Homesite Value:	+	N/A		
(+) Improvement Non-Homesite Value:	+	N/A		
(+) Land Homesite Value:	+	N/A		
(+) Land Non-Homesite Value:	+	N/A	Ag / Timber Use Value	
(+) Agricultural Market Valuation:	+	N/A		N/A
(+) Timber Market Valuation:	+	N/A		N/A
(=) Market Value:	=	N/A		
(–) Ag or Timber Use Value Reduction:	–	N/A		
(=) Appraised Value:	=	N/A		
(–) HS Cap:	–	N/A		
(=) Assessed Value:	=	N/A		

Taxing Jurisdiction

Owner: RIO NOGALES POWER PROJECT LP
% Ownership: 100.0000000000%
Total Value: N/A

Entity	Description	Tax Rate	Appraised Value	Taxable Value	Estimated Tax
CAD	APPRAISAL DISTRICT	N/A	N/A	N/A	N/A
CSG	CITY OF SEGUIN	N/A	N/A	N/A	N/A
GCO	GUADALUPE COUNTY	N/A	N/A	N/A	N/A
LTR	LATERAL ROAD	N/A	N/A	N/A	N/A
SGS	SEGUIN ISD	N/A	N/A	N/A	N/A
	Total Tax Rate:	N/A			
				Taxes w/Current Exemptions:	N/A
				Taxes w/o Exemptions:	N/A

Improvement / Building

Improvement #1: COMMERCIAL State Code: F2 Living Area: sqft Value: N/A

Type	Description	Class CD	Exterior Wall	Year Built	SQFT
POLL	POLLUTION	F/V		2001	0.0

Land

No land segments exist for this property.

Roll Value History

Year	Improvements	Land Market	Ag Valuation	Appraised	HS Cap	Assessed
2012	N/A	N/A	N/A	N/A	N/A	N/A
2011	$35,089,820	$0	0	35,089,820	$0	$35,089,820
2010	$28,123,900	$0	0	28,123,900	$0	$28,123,900
2009	$29,554,330	$0	0	29,554,330	$0	$29,554,330
2008	$22,657,890	$0	0	22,657,890	$0	$22,657,890
2007	$9,571,060	$0	0	9,571,060	$0	$9,571,060

Deed History - (Last 3 Deed Transactions)

#	Deed Date	Type	Description	Grantor	Grantee	Volume	Page	Deed Number

Questions Please Call (830) 303-3313

Website version: 1.2.2.2

Database last updated on: 7/16/2012 8:28 PM

© 2012 True Automation, Inc. All Rights Reserved. Privacy Notice

This site only supports Internet Explorer 6+, Netscape 7+ and Firefox 1.5+.

19. SABINE COGENERATION, LP

Orange County Appraisal District

9157 IH-10 East, Orange, Texas 77630
Phone: (409) 745-4777 Fax (409) 745-4112

Home
General Information
News
FAQ
Searches
- Property ID Search
- Account Search
- Owner Search
- Address Search

Property Data
- Detail Sheet
- Datasheet

Other
- Taxing Units
- Neighborhoods
- Abstracts
- Subdivisions
- Tax Code
- 2011 Tax Rates
- Tax Records/Payments
- Homestead Exemption
- AG Guidelines
- 11-12 Reappraisal Plan
- Appealing Your Value
- Rendition Requirements
- Arbitration
- 2011 Budget Summary
- All Forms
- On-line Protest

Property Detail Sheet (R62024)

History GIS Map Datasheet
Protest

Owner Information

Owner ID:	O0001974
Owner Name:	SABINE COGEN LP
Owner Address:	% CAMS 919 MILAM ST STE 2300 HOUSTON,TX 77002-5418
Property Address:	FM 1006 Orange, TX

Parcel Information

Legal Description:	TNRCC
Neighborhood:	( )
Acreage:	0
Cross Reference:	072000-000110
Undivided Interest:	
Exemption Codes:	PC (Pollution Control)
Entity Codes:	D02 (Orange County Drainage District) L03 (County of Orange Lateral Road) P01 (Orange County Navigation & Port District) S05 (West Orange-Cove CISD) X40 (County of Orange)
Deed Type:	
Deed Book:	
Deed Page:	
Map Page:	

Click here to view your 2011 certified values and prior history.

Improvements

ID	Type	SPTB	Segs	Value
Imp1	IND (Industrial)	F2 (RealIndustrial)	1	*Unavailable*

Get Adobe Reader
A recent version of Adobe Acrobat Reader is required to view PDF documents. Acrobat Reader is a free program available here.

Orange County Appraisal District
9157 IH-10 East, Orange, Texas 77630
Phone: (409) 745-4777 Fax (409) 745-4112

Home
General Information
News
FAQ
Searches
- Property ID Search
- Account Search
- Owner Search
- Address Search

Property Data
- Detail Sheet
- Datasheet

Other
- Taxing Units
- Neighborhoods
- Abstracts
- Subdivisions
- Tax Code
- 2011 Tax Rates
- Tax Records/Payments
- Homestead Exemption
- AG Guidelines
- 11-12 Reappraisal Plan
- Appealing Your Value
- Rendition Requirements
- Arbitration
- 2011 Budget Summary
- All Forms
- On-line Protest

Assessment History (R62024)

XRef ID
072000-000110

Situs Address
FM 1006
Orange, TX

	2011	2010	2009	2008
Improvement HS	$0	$0	$0	$0
Improvement NHS	$2,875,510	$3,560,000	$3,560,000	$4,005,000
Land HS	$0	$0	$0	$0
Land NHS	$0	$0	$0	$0
Agricultural Mkt	$0	$0	$0	$0
Agricultural Use	$0	$0	$0	$0
Timber Market	$0	$0	$0	$0
Timber Use	$0	$0	$0	$0
Market Value	$2,875,510	$3,560,000	$3,560,000	$4,005,000
Homestead Limit				
Assessed	$2,875,510	$3,560,000	$3,560,000	$4,005,000
Exemptions	PC	PC	PC	PC

2012
R62024

07/26/2012

Current Owner	Legal Description	Exemptions	Market
SABINE COGEN LP (O0001974) % CAMS 919 MILAM ST STE 2300 HOUSTON,TX 77002-5418	TNRCC	PC	Unavailable
		Entities	**Assessed**
		D02, L03, P01, S05, X40	Unavailable

Situs Address

FM 1006
Orange, TX

Sales

Date	Volume	Page	Seller Name

History Information

	2012	2011	2010	2009
Imp HS	$0	$0	$0	$0
Imp NHS	$2,955,350	$2,875,510	$3,560,000	$3,560,000
Land HS	$0	$0	$0	$0
Land NHS	$0	$0	$0	$0
Ag Mkt	$0	$0	$0	$0
Ag Use	$0	$0	$0	$0
Tim Mkt	$0	$0	$0	$0
Tim Use	$0	$0	$0	$0
HS Cap	-	-	-	-
Assessed	$2,955,350	$2,875,510	$3,560,000	$3,560,000

Building Attributes

Construction	Foundation	Exterior	Interior	Roof	Flooring

Heat/AC	Baths	Fireplace	Year Built	Rooms	Bedrooms

Land Segments

SPTB	Description	Area	Market	Ag Value

Improvements

Type	Description	Area	Year Built	Eff Year	Value
IND	Industrial				
COMM	Commercial	0			

20. TENASKA FRONTIER PARTNERS, LTD

Grimes Central Appraisal District

The data contained on these pages is 2012 preliminary data and is subject to change at any time.

Property Detail Sheet (P59788)

History Datasheet Statement
Bills Pay Taxes

Home
General Information
News
FAQ
Searches
- Property ID Search
- Account Search
- Owner Search
- Address Search
- Advanced Search

Property Data
- Detail Sheet
- Datasheet
- Bills

Other
- Taxing Units
- Abstracts
- Subdivisions
- Maps
- Tax Rates
- Exemptions
- Forms/Guidelines
- Links
- ECheck Payments
- Credit Card Payments
- Utilities
- Board of Directors
- Protest Information
- Employment
- Contact Webmaster

Owner Information

Owner ID:	O59766
Owner Name:	TENASKA FRONTIER PARTNERS LTD
Owner Address:	ATTN: DAVID JOHNSON 1044 N 115TH STE 400 OMAHA,NE 68154-4446
Property Address:	

Parcel Information

Legal Description:	POLLUTION CONTROL EQUIP TNRCC 00-5497 & 07-11871
Neighborhood:	( )
Acreage:	
Cross Reference:	8901-000-9991
Undivided Interest:	100%
Exemption Codes:	PC (Pollution Control)
Entity Codes:	GGR (Grimes County) SAS (Anderson-Shiro)
Deed Type:	
Deed Book:	
Deed Page:	
Map Page:	

Values Breakdown	2012 Preliminary Value
Land HS:	$0 +
Land NHS:	$0 +
Improvement HS:	$0 +
Improvement NHS:	$27,003,200 +
Ag Market:	$0
Ag Use:	$0 +
Timber Market:	$0
Timber Use:	$0 +
Assessed:	$27,003,200 =

Get Adobe Reader

A recent version of Adobe Acrobat Reader is required to view PDF documents. Acrobat Reader is a free program available here.

Grimes Central Appraisal District

The data contained on these pages is 2013 preliminary data and is subject to change at any time.

Home
General Information
News
FAQ
Searches
- Property ID Search
- Account Search
- Owner Search
- Address Search
- Advanced Search

Property Data
- Detail Sheet
- Datasheet
- Bills

Other
- Taxing Units
- Abstracts
- Subdivisions
- Maps
- Tax Rates
- Exemptions
- Forms/Guidelines
- Links
- ECheck Payments
- Credit Card Payments
- Utilities
- Board of Directors
- Protest Information
- Employment
- Customer Survey
- Contact Webmaster

Assessment History (P59788)

XRef ID
8901-000-9991

Situs Address

	2012	2011	2010	2009
Improvement HS	$0	$0	$0	$0
Improvement NHS	$27,003,200	$27,596,400	$28,209,560	$29,373,500
Land HS	$0	$0	$0	$0
Land NHS	$0	$0	$0	$0
Agricultural Mkt	$0	$0	$0	$0
Agricultural Use	$0	$0	$0	$0
Timber Market	$0	$0	$0	$0
Timber Use	$0	$0	$0	$0
Market Value	$0	$0	$0	$0
Homestead Limit				
Assessed	$27,003,200	$27,596,400	$28,209,560	$29,373,500
Exemptions	PC	PC	PC	PC

Current Owner	Legal Description	Exemptions	Market
TENASKA FRONTIER PARTNERS LTD (O59766) ATTN: DAVID JOHNSON 1044 N 115TH STE 400 OMAHA,NE 68154-4446	POLLUTION CONTROL EQUIP TNRCC 00-5497 & 07-11871	PC	
		Entities	**Assessed**
		GGR, SAS	

Situs Address

Sales

Date	Volume	Page	Seller Name

History Information

	2011	2010	2009	2008
Imp HS	-	-	-	-
Imp NHS	$27,596,400	$28,209,560	$29,373,500	$27,986,700
Land HS	-	-	-	-
Land NHS	-	-	-	-
Ag Mkt	-	-	-	-
Ag Use	-	-	-	-
Tim Mkt	-	-	-	-
Tim Use	-	-	-	-
HS Cap	-	-	-	-
Assessed	$27,596,400	$28,209,560	$29,373,500	$27,986,700

Building Attributes

Construction	Foundation	Exterior	Interior	Roof	Flooring

Heat/AC	Baths	Fireplace	Year Built	Rooms	Bedrooms

Land Segments

SPTB	Description	Area	Market	Ag Value

Improvements

Type	Description	Area	Year Built	Eff Year	Value

Grimes Central Appraisal District

The data contained on these pages is 2013 preliminary data and is subject to change at any time.

Home
General Information
News
FAQ
Searches
- Property ID Search
- Account Search
- Owner Search
- Address Search
- Advanced Search

Property Data
- Detail Sheet
- Datasheet
- Bills

Other
- Taxing Units
- Abstracts
- Subdivisions
- Maps
- Tax Rates
- Exemptions
- Forms/Guidelines
- Links
- ECheck Payments
- Credit Card Payments
- Utilities
- Board of Directors
- Protest Information
- Employment
- Customer Survey
- Contact Webmaster

Bill Listing (P59788)

Statement Pay Taxes

XRef ID
8901-000-9991

Situs Address

Calculation Date

Sort by: Tax Year 07/27/2012 Calculate

Past Years Due	Current Amount Due	Total Amount Due
0.00	0.00	0.00

Year	Tax Description *	Levy	P&I	Att Fee	Disc./Cl	Date Paid	Amt. Paid	Balance
2011	Anderson-Shiro	0.00	0.00	0.00	0.00		0.00	0.00
2011	Grimes County	0.00	0.00	0.00	0.00		0.00	0.00
	2011 total	**0.00**	**0.00**	**0.00**	**0.00**		**0.00**	**0.00**
2010	Anderson-Shiro	0.00	0.00	0.00	0.00		0.00	0.00
2010	Grimes County	0.00	0.00	0.00	0.00		0.00	0.00
	2010 total	**0.00**	**0.00**	**0.00**	**0.00**		**0.00**	**0.00**
2009	Anderson-Shiro	0.00	0.00	0.00	0.00		0.00	0.00
2009	Grimes County	0.00	0.00	0.00	0.00		0.00	0.00
	2009 total	**0.00**	**0.00**	**0.00**	**0.00**		**0.00**	**0.00**
2008	Anderson-Shiro	0.00	0.00	0.00	0.00		0.00	0.00
2008	Grimes County	0.00	0.00	0.00	0.00		0.00	0.00
	2008 total	**0.00**	**0.00**	**0.00**	**0.00**		**0.00**	**0.00**
2007	Anderson-Shiro	0.00	0.00	0.00	0.00		0.00	0.00
2007	Grimes County	0.00	0.00	0.00	0.00		0.00	0.00
	2007 total	**0.00**	**0.00**	**0.00**	**0.00**		**0.00**	**0.00**
2006	Anderson-Shiro	0.00	0.00	0.00	0.00		0.00	0.00
2006	Grimes County	0.00	0.00	0.00	0.00		0.00	0.00
	2006 total	**0.00**	**0.00**	**0.00**	**0.00**		**0.00**	**0.00**
2005	Anderson-Shiro	0.00	0.00	0.00	0.00		0.00	0.00
2005	Grimes County	0.00	0.00	0.00	0.00		0.00	0.00
	2005 total	**0.00**	**0.00**	**0.00**	**0.00**		**0.00**	**0.00**
2004	Anderson-Shiro	0.00	0.00	0.00	0.00		0.00	0.00
2004	Grimes County	0.00	0.00	0.00	0.00		0.00	0.00
	2004 total	**0.00**	**0.00**	**0.00**	**0.00**		**0.00**	**0.00**
2003	Anderson-Shiro	0.00	0.00	0.00	0.00		0.00	0.00
	2003 total	**0.00**	**0.00**	**0.00**	**0.00**		**0.00**	**0.00**
2002	Anderson-Shiro	0.00	0.00	0.00	0.00		0.00	0.00
	2002 total	**0.00**	**0.00**	**0.00**	**0.00**		**0.00**	**0.00**
2001	Anderson-Shiro	0.00	0.00	0.00	0.00		0.00	0.00
	2001 total	**0.00**	**0.00**	**0.00**	**0.00**		**0.00**	**0.00**

*** To see the full entity name, position the mouse over the entity name you wish to view.**

DISCLAIMER

If applicable, the above described property is receiving special valuation based upon its use. Additional rollback taxes which may become due based on the provisions of the special valuation are not indicated in these pages.

Copyright © 2003 The Software Group, Inc.
All rights reserved.

Issue Date : 7/24/2012

Statement Of Account

Grimes County Appraisal District

Grimes County Appraisal District
PO Box 489
Anderson, TX 77830
Ph: 936-873-2163 Fax: 936-873-2154

This is a statement of taxes paid and due as of 7/24/2012 based upon the tax records of the Grimes County Appraisal District.

This document is not a tax certificate and does not absolve a taxpayer from tax liability in any way. Should this document be found to be in error, it may be corrected by the collections office. Responsibility to pay taxes remains with the taxpayer as outlined in the Texas Property Tax Code.

Property Information

Property ID : 8901-000-9991
Quick-Ref ID : P59788

POLLUTION CONTROL EQUIP TNRCC 00-5497 & 07-11871

Value Information

Land HS	:	$0.00
Land NHS	:	$0.00
Imp HS	:	$0.00
Imp NHS	:	$0.00
Ag Mkt	:	$0.00
Ag Use	:	$0.00
Tim Mkt	:	$0.00
Tim Use	:	$0.00
HS Cap Adj	:	$0.00
Assessed	:	$27,596,400.

Owner Information

Owner ID : O59766

TENASKA FRONTIER PARTNERS LTD
ATTN: DAVID JOHNSON
1044 N 115TH STE 400
OMAHA, NE 68154-4446

Ownership: 100.00%

Entity	Year	Tax	Discount	P&I	Atty Fee	TOTAL
GGR	2011	0.00	0.00	0.00	0.00	0.00
SAS	2011	0.00	0.00	0.00	0.00	0.00

Total for current bills if paid by 7/31/2012 : $0.00
Total due on all bills 7/31/2012 : $0.00
2011 taxes paid for entity GGR $0.00
2011 taxes paid for entity SAS $0.00
2011 Total Taxes Paid : $0.00

© 2003 Tyler Technologies, Inc.

Grimes Central Appraisal District

The data contained on these pages is 2012 preliminary data and is subject to change at any time.

Home
General Information
News
FAQ
Searches
- Property ID Search
- Account Search
- Owner Search
- Address Search
- Advanced Search

Property Data
- Detail Sheet
- Datasheet
- Bills

Other
- Taxing Units
- Abstracts
- Subdivisions
- Maps
- Tax Rates
- Exemptions
- Forms/Guidelines
- Links
- ECheck Payments
- Credit Card Payments
- Utilities
- Board of Directors
- Protest Information
- Employment
- Contact Webmaster

Property Detail Sheet (P68262)

History Datasheet Statement
Bills Pay Taxes

Owner Information

Owner ID:	059766
Owner Name:	TENASKA FRONTIER PARTNERS LTD
Owner Address:	ATTN: DAVID JOHNSON 1044 N 115TH STE 400 OMAHA,NE 68154-4446
Property Address:	

Parcel Information

Legal Description:	POLUTION CONTROL TCEQ 07-11915 TIER IV & 00-5497
Neighborhood:	( )
Acreage:	
Cross Reference:	8908-001-0162
Undivided Interest:	100%
Exemption Codes:	PC (Pollution Control)
Entity Codes:	GGR (Grimes County) SAS (Anderson-Shiro)
Deed Type:	
Deed Book:	
Deed Page:	
Map Page:	

Values Breakdown	2012 Preliminary Value
Land HS:	$0 +
Land NHS:	$0 +
Improvement HS:	$0 +
Improvement NHS:	$46,353,400 +
Ag Market:	$0
Ag Use:	$0 +
Timber Market:	$0
Timber Use:	$0 +
Assessed:	$46,353,400 =

Get Adobe Reader

A recent version of Adobe Acrobat Reader is required to view PDF documents. Acrobat Reader is a free program available here.

Grimes Central Appraisal District

The data contained on these pages is 2013 preliminary data and is subject to change at any time.

Home
General Information
News
FAQ
Searches
- Property ID Search
- Account Search
- Owner Search
- Address Search
- Advanced Search

Property Data
- Detail Sheet
- Datasheet
- Bills

Other
- Taxing Units
- Abstracts
- Subdivisions
- Maps
- Tax Rates
- Exemptions
- Forms/Guidelines
- Links
- ECheck Payments
- Credit Card Payments
- Utilities
- Board of Directors
- Protest Information
- Employment
- Customer Survey
- Contact Webmaster

Assessment History (P68262)

XRef ID: 8908-001-0162

Situs Address

	2012	2011	2010	2009
Improvement HS	$0	$0	$0	$0
Improvement NHS	$46,353,400	$31,332,800	$27,460,880	$28,165,000
Land HS	$0	$0	$0	$0
Land NHS	$0	$0	$0	$0
Agricultural Mkt	$0	$0	$0	$0
Agricultural Use	$0	$0	$0	$0
Timber Market	$0	$0	$0	$0
Timber Use	$0	$0	$0	$0
Market Value	$0	$0	$0	$0
Homestead Limit				
Assessed	$46,353,400	$31,332,800	$27,460,880	$28,165,000
Exemptions	PC	PC	PC	PC

Current Owner	Legal Description	Exemptions	Market
TENASKA FRONTIER PARTNERS LTD (O59766) ATTN: DAVID JOHNSON 1044 N 115TH STE 400 OMAHA,NE 68154-4446	POLUTION CONTROL TCEQ 07-11915 TIER IV & 00-5497	PC	
		Entities	**Assessed**
		GGR, SAS	

Situs Address

Sales

Date	Volume	Page	Seller Name

History Information

	2011	2010	2009	2008
Imp HS	-	-	-	-
Imp NHS	$31,332,800	$27,460,880	$28,165,000	$28,165,000
Land HS	-	-	-	-
Land NHS	-	-	-	-
Ag Mkt	-	-	-	-
Ag Use	-	-	-	-
Tim Mkt	-	-	-	-
Tim Use	-	-	-	-
HS Cap	-	-	-	-
Assessed	$31,332,800	$27,460,880	$28,165,000	$28,165,000

Building Attributes

Construction	Foundation	Exterior	Interior	Roof	Flooring

Heat/AC	Baths	Fireplace	Year Built	Rooms	Bedrooms

Land Segments

SPTB	Description	Area	Market	Ag Value

Improvements

Type	Description	Area	Year Built	Eff Year	Value

Grimes Central Appraisal District

The data contained on these pages is 2013 preliminary data and is subject to change at any time.

Home
General Information
News
FAQ
Searches
- Property ID Search
- Account Search
- Owner Search
- Address Search
- Advanced Search

Property Data
- Detail Sheet
- Datasheet
- Bills

Other
- Taxing Units
- Abstracts
- Subdivisions
- Maps
- Tax Rates
- Exemptions
- Forms/Guidelines
- Links
- ECheck Payments
- Credit Card Payments
- Utilities
- Board of Directors
- Protest Information
- Employment
- Customer Survey
- Contact Webmaster

Bill Listing (P68262)

Statement Pay Taxes

XRef ID
8908-001-0162

Situs Address

Calculation Date

Sort by: Tax Year 07/27/2012 Calculate

Past Years Due	Current Amount Due	Total Amount Due
0.00	0.00	0.00

Year	Tax Description *	Levy	P&I	Att Fee	Disc./Cr	Date Paid	Amt. Paid	Balance
2011	Grimes County	0.00	0.00	0.00	0.00		0.00	0.00
2011	Anderson-Shiro	0.00	0.00	0.00	0.00		0.00	0.00
	2011 total	**0.00**	**0.00**	**0.00**	**0.00**		**0.00**	**0.00**
2010	Grimes County	0.00	0.00	0.00	0.00		0.00	0.00
2010	Anderson-Shiro	0.00	0.00	0.00	0.00		0.00	0.00
	2010 total	**0.00**	**0.00**	**0.00**	**0.00**		**0.00**	**0.00**
2009	Grimes County	0.00	0.00	0.00	0.00		0.00	0.00
2009	Anderson-Shiro	0.00	0.00	0.00	0.00		0.00	0.00
	2009 total	**0.00**	**0.00**	**0.00**	**0.00**		**0.00**	**0.00**
2008	Grimes County	0.00	0.00	0.00	0.00		0.00	0.00
2008	Anderson-Shiro	0.00	0.00	0.00	0.00		0.00	0.00
	2008 total	**0.00**	**0.00**	**0.00**	**0.00**		**0.00**	**0.00**

*** To see the full entity name, position the mouse over the entity name you wish to view.**

DISCLAIMER

If applicable, the above described property is receiving special valuation based upon its use. Additional rollback taxes which may become due based on the provisions of the special valuation are not indicated in these pages.

Copyright © 2003 The Software Group, Inc.
All rights reserved.

Issue Date : 7/24/2012

Statement Of Account

Grimes County Appraisal District

Grimes County Appraisal District
PO Box 489
Anderson, TX 77830
Ph: 936-873-2163 Fax: 936-873-2154

This is a statement of taxes paid and due as of 7/24/2012 based upon the tax records of the Grimes County Appraisal District.

This document is not a tax certificate and does not absolve a taxpayer from tax liability in any way. Should this document be found to be in error, it may be corrected by the collections office. Responsibility to pay taxes remains with the taxpayer as outlined in the Texas Property Tax Code.

Property Information

Property ID : 8908-001-0162
Quick-Ref ID : P68262

POLUTION CONTROL
TCEQ 07-11915 TIER IV &
00-5497

Value Information

Land HS	:	$0.00
Land NHS	:	$0.00
Imp HS	:	$0.00
Imp NHS	:	$0.00
Ag Mkt	:	$0.00
Ag Use	:	$0.00
Tim Mkt	:	$0.00
Tim Use	:	$0.00
HS Cap Adj	:	$0.00
Assessed	:	$31,332,800.

Owner Information

Owner ID : O59766

TENASKA FRONTIER PARTNERS LTD
ATTN: DAVID JOHNSON
1044 N 115TH STE 400
OMAHA, NE 68154-4446

Ownership: 100.00%

Entity	Year	Tax	Discount	P&I	Atty Fee	TOTAL
GGR	2011	0.00	0.00	0.00	0.00	0.00
SAS	2011	0.00	0.00	0.00	0.00	0.00

Total for current bills if paid by 7/31/2012 : $0.00
Total due on all bills 7/31/2012 : $0.00
2011 taxes paid for entity GGR $0.00
2011 taxes paid for entity SAS $0.00
2011 Total Taxes Paid : $0.00

© 2003 Tyler Technologies, Inc.

DUFF & PHELPS, LLC ▪ 919 CONGRESS AVENUE, SUITE 1450 ▪ AUSTIN, TX 78701 ▪ TEL 512-671-5500 ▪ FAX 512-671-5501

DUFF & PHELPS

December 5, 2008

Texas Commission on Environmental Quality
Attention: Docket Clerk
TCEQ Office of Chief Clerk MC 105
P.O. Box 13087
Austin, Texas 78711-3087

Subject: Response to the appeal of the Executive Director's Use Determination (07-11966), regarding Freestone Power Generation, L.P.; TCEQ Docket Nos. 2008-0831-MIS-U

Dear Commissioners:

Pursuant to Title 30 of Chapter 17 of the Texas Administrative Code, the Applications under appeal were prepared using the Texas Commission on Environmental Quality's ("TCEQ's") Application for Use Determination for Pollution Control Property (TCEQ-0611). For these Tier IV applications, the subject pollution control property included in the application is listed on the TCEQ's Equipment & Categories List ("ECL"), and is identified and summarized as follows:

Gas Turbine Plant Heat Recovery Steam Generators ("HRSG"), Steam Turbine and Supporting Systems: (ECL: B-8 & B-10)

Pertinent Rule(s), Regulation(s) or Law(s):
40 CFR Part 60 Subparts Da, Db, GG, and KKKK, New Source Performance Standards ("NSPS") Limits for Electric Utility Steam Generating Units and Industrial commercial Institutional Steam Generating Units

TAC Rule 106.512, Standard Permit for Electric Generating Units (EGU)

Note: Permits issued under Texas Clean Air Act's Health & Safety code Sections 382.011, applies to all electric generating units that emit air contaminants, regardless of size, and provides limits for electric generating units on an output basis in pounds of NOx per megawatt hour, adjusted to reflect a simple cycle power plant.

BACKGROUND

Texas Pollution Prevention Issue

Currently in the U.S. two thirds of the potential energy of fossil fuels burned to generate electricity in traditional fossil-fired steam boilers is lost in the form of waste heat released into the atmosphere or surface waters located near these facilities. Traditional U.S. power generation plant efficiencies have not increased since the 1950's and more than one fifth of the U.S. power plant designs are more than 50 years old. These power generation facilities are significant contributors to U.S. emissions of carbon dioxide, NO_x, sulfur dioxide, and other contaminants into the air and water due to facility operations.

Combined Cycle Technology Background

Innovative power systems such as combined cycle technology offer enormous potential to reduce the environmental impacts of power generation through the reduction and/or prevention of air emissions to the environment through the efficient use of fossil fuel. Steam produced in the heat recovery steam generators powers a steam turbine generator(s) to produce additional electric power.

Use of the otherwise wasted heat in the combustion turbine exhaust gas results in a higher plant-wide thermal efficiency compared to other combustion-based technologies. As well, state-of-the-art combined-cycle plants can convert about 50 percent of the chemical energy of natural gas into electricity (HHV basis).

Gas turbine combined cycle systems, like the subject plant, Freestone Energy Center, generate electricity by burning a fossil fuel and then use a heat recovery unit to capture heat from the combustion system's exhaust stream. This heat is converted into useful thermal energy, in the form of steam. Per the US EPA, combined-cycle technology plays an important role in meeting the US energy needs. As well, it reduces the environmental impacts of power generation because of both its fuel efficiency benefits in producing more energy output per pound of fuel burned, and in the resulting reduction in air emissions due to less fuel burned for the same energy output.

RESPONSE TO PETITION

We concur with the Texas Commissions Executive Use Determination for the Heat Recovery Steam Generator (B-8), but disagree with the Use Determination received on the Steam Turbine (B-10) letter received May 1st, 2008 whereby the outcome of their review resulted in a Use Determination as follows:

> **A 100% positive use determination for the two Heat Recovery Steam Generators. This equipment is considered to be pollution control equipment and was installed to meet or exceed federal or State regulations.**

A negative determination is issued for the steam turbine. The use of the steam turbine does not provide an environmental benefit at the site. The steam turbine is not considered to be pollution control equipment.

To date, neither the Appellant nor subsequent Executive Director-assembled workgroups have produced any valid evidence or reasonable agreed-upon conclusions that would lead us to believe that the facts, technical merits, and conclusion of our Application for Use Determination of Pollution Control Property are not valid.

The Executive Director's new technical position released on December 3rd, 2008 where by their findings produce a positive use determination of 61% for the HRSG and 0% for the steam turbine is not technically correct and promotes environmental loss.

We are appealing the TCEQ's Workgroup and Executive Director's Recommendation regarding the modified version of the calculation presented by Cummings Westlake pertaining to a reasonable use determination percentage for HRSGs and steam turbines. The percentage calculation for this use determination based upon thermal efficiency increases resulting from technology provided by Cummings Westlake, LLC is flawed for a number of reasons. First, it departs from the Decision Flow Charts. Ironically, the TCEQ staff leveled this same change with regard to the application we originally submitted. Second, the calculation of a 39% increase in thermal efficiency is based upon all of the back-end equipment components of the plant contributing to the overall process, not just simply the HRSG - hence misappropriating efficiency and pollution control benefits to other items of machinery and equipment not currently identified on Part A or Part B of the ECL. Third, this very simplified calculation significantly underestimates the efficiency and pollution control contribution resulting from the HRSG and steam turbine as evidenced by the output based calculations provided in our application.

Finally, the most significant flaw in the Cummings Westlake calculation of the positive use determination is that it is contrary to public policy and to the purpose of H.B. 3732. Simple logic will prove that it would be inappropriate to provide a benefit based upon the reasoning provided in the Cummings Westlake calculation. By adopting this approach, it is inferred that there is an inverse relationship between thermal efficiency and pollution control. Assume that the efficiency increase was only 20% instead of 39%, then by the methodology set forth by the Cummings Westlake approach, there would be a resulting 80% positive use determination for the HRSG. Conversely, if there was a 60% increase in efficiency, as opposed to the 39%, then the positive use determination would be dramatically reduced to only 40%. This approach would hinder the advancement of clean energy projects through better efficiencies by penalizing the owner with a lower tax exemption percentage, which is clearly contrary to the intent of H.B. 3732.

Our Avoided Emissions Approach parallels the Texas Clear Act Health & Safety Code Sections 382.011, which limits emissions from electric generating units on an output-based standard in pounds NOx per megawatt hour.

Appellant: **I. Property Description**

See Attached (Exhibit A)

Response: **I. Property Description**

The Freestone Energy Center is a nominally 1050 MW merchant power plant that is situated on a 63-acre site that is a portion of approximately 550 acres owned by Calpine in north central Texas, approximately 80 miles south of Dallas. The primary equipment for the facility consists of four combustion turbine generators (CTGs), four heat recovery steam generators (HRSGs), and two steam turbine generators (STGs) (a "4~4x2" configuration). The equipment is configured into two largely independent power blocks, each consisting of 2 CTGs, 2 HRSGs, and 1 STG (thus, two 2x2~1 configurations). Each CTG exhausts into its own HRSG, which utilizes the exhaust heat to generate steam for use in the STG. The HRSGs found in the Freestone Energy Center are therefore, in simple terms, heat exchangers that recover heat from a hot gas stream for reuse versus release into the atmosphere. Use of the otherwise wasted heat in the turbine exhaust gas results in higher plant thermal efficiency compared to other power generation technologies employed in Texas.

The Figure below is representative of a simplified combined-cycle plant process flow, similar to the Freestone Energy Center.

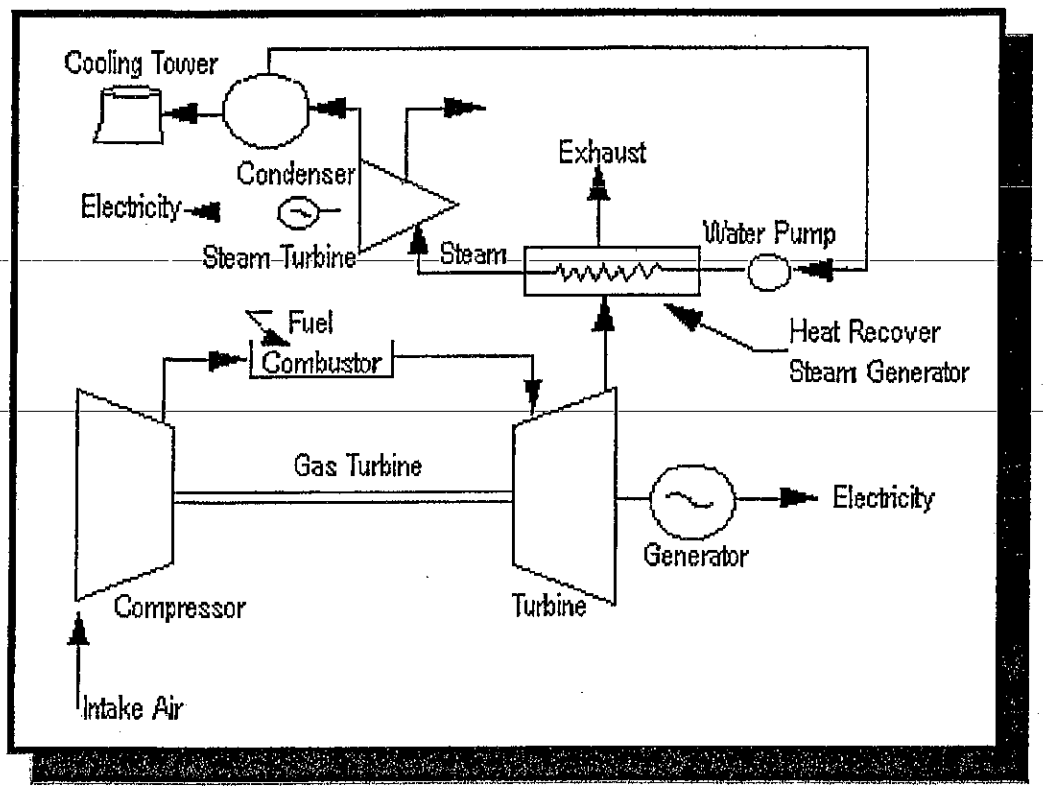

Appellant: **II. Rule Change**

See Attached (Exhibit A)

Response: **II. <u>Proposition 2 Expansion for Additional Pollution Control Devices</u>**

Under the legislation of Texas House Bill 3732 ("HB3732") enacted in 2007, Section 11.31 of the Texas Tax Code is amended by adding certain plant equipment and systems to the current list of air, water, or land pollution control devices. Specifically, the language reads as follows:

SECTION 4. Section 11.31, Tax Code, is amended by adding Subsections (k), (l), and (m) to read as follows:
(k) The Texas Commission on Environmental Quality shall adopt rules establishing a nonexclusive list of facilities, devices, or methods for the control of air, water, or land pollution, which must include:
(1) coal cleaning or refining facilities;
(2) atmospheric or pressurized and bubbling or circulating fluidized bed combustion systems and gasification fluidized bed combustion combined cycle systems;
(3) ultra-supercritical pulverized coal boilers;
(4) flue gas recirculation components;
(5) syngas purification systems and gas-cleanup units;
(6) enhanced heat recovery systems;
(7) exhaust heat recovery boilers;
(8) heat recovery steam generators;
(9) superheaters and evaporators;
(10) enhanced steam turbine systems;
(11) methanation;
(12) coal combustion or gasification byproduct and coproduct handling, storage, or treatment facilities;
(13) biomass cofiring storage, distribution, and firing systems;
(14) coal cleaning or drying processes, such as coal drying/moisture reduction, air jigging, precombustion decarbonization, and coal flow balancing technology;
(15) oxy-fuel combustion technology, amine or chilled ammonia scrubbing, fuel or emission conversion through the use of catalysts, enhanced scrubbing technology, modified combustion technology such as chemical looping, and cryogenic technology;
(16) if the United States Environmental Protection Agency adopts a final rule or regulation regulating carbon dioxide as a pollutant, property that is used, constructed, acquired, or installed wholly or partly to capture carbon dioxide from an anthropogenic source in this state that is geologically sequestered in this state;
(17) fuel cells generating electricity using hydrogen derived from coal, biomass, petroleum coke, or solid waste; and
(18) any other equipment designed to prevent, capture, abate, or monitor nitrogen oxides, volatile organic compounds, particulate matter, mercury, carbon monoxide, or any criteria pollutant.
(l) The Texas Commission on Environmental Quality by rule shall update the list adopted under Subsection (k) at least once every three years. An item may be removed from the list if the commission finds compelling evidence to support the conclusion that the item does not provide pollution control benefits.
(m) Notwithstanding the other provisions of this section, if the facility, device, or method for the control of air, water, or land pollution described in an application for an exemption under this

> *section is a facility, device, or method included on the list adopted under Subsection (k), the executive director of the Texas Commission on Environmental Quality, not later than the 30th day after the date of receipt of the information required by Subsections (c)(2) and (3) and without regard to whether the information required by Subsection (c)(1) has been submitted, shall determine that the facility, device, or method described in the application is used wholly or partly as a facility, device, or method for the control of air, water, or land pollution and shall take the actions that are required by Subsection (d) in the event such a determination is made.*

Based upon the amended language of Section 11.31 of the Texas Tax Code, it is clear that the enumerated facilities, devices or methods must be considered in whole, or in part, as pollution control facilities, devices or methods by the TCEQ; the TCEQ must treat the enumerated facilities, devices or methods as eligible, in whole or in part, for property tax exemption as pollution control property; and finally, such eligibility for tax exemption must be based upon a methodology to be established by the TCEQ. Therefore, in response to the concern raised by the appellant, it is our contention that the HRSGs and the steam turbine systems embedded within the CHP system of the subject plant are to be treated as qualifying pollution control facilities, devices or methods, and are no longer to be considered solely within the context of a power/steam generation use.

TCEQ's updated ***"Tax Relief for Pollution Control Property – Application Instructions and Equipment and Categories List – Effective January 2008"*** incorporates a list of the pollution control property categories adopted and set forth in TTC Sec. 26.045(f). Item B-8 of the ECL – Part B lists Heat Recovery Steam Generators (HRSGs), while Item B-10 of the ECL – Part B lists Steam Turbine Generators (STGs).

As required in these instructions, the taxpayer, in its Tier IV application, supplied a pollution control percentage for the equipment listed in Part B via calculations demonstrating pollution control, prevention and/or reductions achieved by the listed equipment or systems, i.e., the subject facility's HRSGs and associated STGs. The subject facility received a 100% property tax exemption from the TCEQ for its HRSGs and a 0% exemption for its STGs based upon the technical and statutory positions represented in the facility's application dated Mach 27, 2008.

Current Regulatory Authority for Output Based Emissions Standards

Consideration of the use of output based emissions standards, as is now incorporated within the U.S. EPA's New Source Performance Standards ("NSPS") for NO_x, are gaining importance for a reason: by determining emission levels based upon the amount of electricity and or thermal energy generated, output based standards support improved efficiency and pollution prevention without regard to the type of fuel or technology used to achieve that improvement. The use of innovative methods of power generation such as combined cycle and CHP reduces fossil fuel use and leads to multi-media reductions in the environmental impacts of the production, processing transportation, and combustion of fossil fuels. Reducing fossil fuel combustion is a pollution prevention measure that reduces emissions of all products of combustion, not just the target pollutant of a regulatory program.

Appellant: **III. Compliance**

See Attached (Exhibit A)

Response: **III. Compliance**

The basis by which the taxpayer represented the percentage of tax exemption eligibility for the HRSGs utilized an output-based emissions philosophy to demonstrate the level of emissions avoidance, or reduction, achieved by incorporating the combined cycle system approach within the Facility's operations. Emissions reductions, as represented by NOx emissions reductions achieved through fuel consumption savings, represents the pollution control or prevention purpose of the combined cycle system. For simplicity, NOx emissions were chosen; additional emissions reductions for SO2, CO2, etc., were also available.

Currently, the subject facility's input based NOx emissions standard, as represented in data provided by the taxpayer, does not recognize the subject facility for its fuel consumption savings and resulting emissions reductions. By establishing the amount of reduction found by using output based annual emissions versus input-based standards and multiplying this amount by the subject facility's historical costs, we were able to derive a surrogate for the subject plant's capital costs dedicated to additional NOx emissions avoidance, above the historically granted pollution control exemptions recognized on prior TCEQ Tier I or II application reviews. As this value was equal to or greater than the historical cost of the equipment item established on the ECL – Part B, it was considered to be eligible for 100% tax exemption status.

The subject appeal requests that the 100% tax exemption status granted under the methodology demonstrated be vacated and that the technical presumption that the HRSGs are major components of electrical and/or steam production be the only measure of equipment contribution to the subject facility's performance. This argument has ignored the broader policy-driven mandate established in Texas to support and further efficiency in fuel consumption in the state as a measure of pollution control. It also ignores the presentation of fact – made earlier within this rebuttal – that combined cycle systems are recognized by the U.S. EPA, by the state of Texas, and in most industry applications currently using such systems have resulted in the prevention and/or reduce air pollution in the State under an output based emissions standard.

Appellant: **IV. Limitations**

See Attached (Exhibit A)

Response: **IV. Limitations**

Pollution control percentages greater than 100% is not a flawed calculation; the breakpoints for facility-wide contributions versus equipment-specific contributions should be made relative to the necessary balance-of-plant systems and equipment supportive of the HRSGs and steam turbines in the subject facility. We agree with the appellant that the entire balance of plant equipment that supports the HRSG and steam turbine, e.g., the steam condensing systems, circulating water systems, chemical

treatment systems etc., are completely intertwined and necessarily included within the plant-wide calculation of fuel efficiency and emissions reductions for CHP and combined cycle systems. Therefore, although all such systems and equipment would more appropriately be identified as tax exempt for its emissions prevention capabilities, it can be inferred that the Texas Legislature judiciously considered the two major pieces of equipment within the Combined Cycle and CHP systems - HRSGs and enhanced steam turbine systems - and enumerated them specifically in the equipment list that ultimately exists in the final statute for tax exemption consideration. It is therefore the taxpayer's contention that such equipment's 100% exempt status represents that portion of the entire balance of plant combined cycle and CHP systems eligible for exemption and the remaining portion of the subject plant remain taxable for property tax considerations.

Appellant: **V. Conclusions**

See Attached (Exhibit A)

Response: **V. Conclusions**

As stated in the sections above, it is the taxpayer's continued belief, as demonstrated through the Avoided Emissions Approach presented in the attached Appendix, that the HRSGs and steam turbines found in the subject plant are 100% exempt from property tax under their definition as pollution control facilities, devices or methods within the statute established by the Texas Legislature, and that their eligibility as pollution control/pollution prevention devices may be measured through a calculation of emissions avoidance demonstrated within the calculations developed. It is also our continued belief that a 100% pollution control exemption be extended to the steam turbine as well.

If you have any questions regarding the application or the information supplied with these application, please contact me at (512) 671-5580 or Ms. Kathy Tronsberg of Duff & Phelps LLC at (215) 430-6059.

Very truly yours,

Mr. Greg Maxim
Duff & Phelps LLC

Enclosures

cc: Kathy Tronsberg (Duff & Phelps LLC - Philadelphia)
Rick Fine (Duff & Phelps LLC - Austin)
Justin Hyland Calpine

APPENDIX

Avoided Emissions Approach

This approach relies on thermal output differences by calculating the displacement of emissions associated with the thermal output and subtracting them from a baseline emission rate. These displaced emissions are emissions that would have been generated by the same thermal output from a conventional system. Greater energy efficiency reduces all air contaminant emissions, including the greenhouse gas carbon dioxide. Higher efficiency processes include combined cycle operation and combined heat and power (CHP) generation. For electric generation the energy efficiency of the process expressed in terms of MMBTU per Megawatt-hr. Lower fuel consumption associated with increased fuel conversion efficiency reduces emissions across the board – that is NOx, SOx, PM, hazardous air pollutants, and greenhouse gas emissions.

In calculating the percent exempt for the listed items from the ECL-Part B, Duff & Phelps LLC utilized an output based NOx allocation method for both Greenfield and Replacement power and heat generation. We looked at the various fossil fuel technologies in use today and chose the baseline facility to be a natural gas fuel-fired steam generator. Duff & Phelps LLC benchmarked this conventional generation to the subject natural gas-fired equipment at the Facility. By doing so, we narrowed the heat rate factors as much as possible to be conservative and uniform in modeling. The benchmark heat rate factor is the following:

- Natural Gas fuel-fired Steam Generator: **10,490 BTU's/kWh**

This heat rate baseline purposely omits other fossil fuel source in order to eliminate impurities typed characteristics, which in turn eliminated the NOx emission and cost of control differences of each fossil fuel and generator type. Comparing the emissions impacts of different energy generation facilities is easy and clear when emissions are measured per unit of useful energy output. For the purpose of our calculations, we converted all the energy output to units of MWh (1 MWh = 3.413 MMBtu), and compared the total emission rate to the baseline facility.

The comparison steps to calculate the NOx reduction are as follows:

A. Plant Input Factors

Input-based Limit = 0.0292 lbs NOx/MMBtu
Unit Design Capacity = 1,038 MW
Capacity Factor = 47.05 Percent
Baseline/Replacement Plant Heat Rate = 10,490 Btu/kWh
Subject Plant Heat Rate = 7,050 Btu/kWh

B. Calculation

Step 1 – Subject Plant

$$\frac{(\text{Input Based Limit}) \times (\text{Heat Rate})}{1{,}000{,}000\ \text{Btu}} \times 1{,}000\ \text{kWh/MWh} = \text{Output : lbs NOx/MWh}$$

Step 2 – Subject Plant

$$\frac{(\text{Output}) \times (\text{Unit Design Capacity MW}) \times (\text{Capacity Factor}) \times (365\ \text{Days}) \times (24\ \text{hrs/day})}{2{,}000\ \text{Tons}} = \text{Output : NOx Tons/Year}$$

Step 3 & 4 – Baseline Plant or Replacement Plant
Same as Step 1 and Step 2 (except use Baseline Heat Rate)

Step 5 – Percent NOx Reduction Calculation

$$\frac{(\text{Output Baseline}) - (\text{Output Subject})}{(\text{Output Subject})} \times 100 = \%\ \text{Reduction}$$

Step 6 – Percent NOx Reduction Calculation

(Total Subject Unit Cost) (% Reduction) = Capital Cost of NOx Avoidance

Step 7 – Percent Exempt Calculation

$$\frac{\text{Total Cost of NOx Avoidance}}{\text{Total Cost of HB 3732 Equipment}} \times 100 = \%\ \text{Exempt}$$

- If % Exempt is greater than 100 then HB 3732 Equipment is 100% Exempt
- If % Exempt is less than 100 then HB 3732 Equipment is partially exempt at the Step 7 calculation

EXHIBIT A

Concerning Eligibility of Heat Recovery Steam Generators

in the

Blackhawk Cogeneration Plant

for

Texas Commission on Environmental Quality

Proposition 2 - Property Tax Exemption Program

By: Charles Wayne Frazell P.E.

I. Property Description

Cogeneration power plants consist of one or more generators powered by industrial size jet engines. These engines can be fueled by most combustible gas or liquids, but currently, most are fueled by natural gas. The hot exhaust from these engines is passed through a heat recovery steam generator (HRSG). A HRSG is essentially a boiler without the burners. The Blackhawk plant boilers create steam that is sold to a neighboring oil refinery.

II. Rule Change

The TCEQ rules were changed in response to the 2007 Texas Legislature HB 3732. The modified rules created the Part B List which includes Exhaust Heat Recovery Boilers (B-7) and Heat Recovery Steam Generators (B-8).

A HRSG is often added to recover exhaust gases to preheat water entering the boiler of a conventional boiler to improve efficiency, but, they are not the driving force behind the plant production. I believe that this is the type of application that was intended by the inclusion of B-7 and B-8 in the TCEQ Part B List.

III. Compliance

To some it will appear that the boiler that recovers the exhaust heat from the turbine engines qualifies as a pollution control item. This of course ignores the fact that this boiler is a major component of production. It was installed to produce steam to sell and not to reduce pollution. If the jet engines were not ducted to the boiler and burners were added, the HRSG side of the plant would operate as a conventional steam power plant. The Blackhawk plant uses burners to produce steam to sell when the jet engines are down for repair. It is not the boiler that reduces the pollution. Ducting the hot gases from the jet engine(s) reduces the pollution by reducing the need for an additional heat source (burners).

As a general rule when a component for pollution control is removed, there is little or no loss in production. For example, when a catalytic converter is removed from an engine it still produces the same horsepower. If electronic precipitators are removed from the exhaust of a coal-burning power plant, it still produces the same amount of electricity.

If the boiler is removed from a cogeneration power plant, there is no steam produced. Since removal of this component eliminates production of a product (steam), this boiler is primarily production equipment. It is not a pollution control device.

In 1992 the people of Texas voted and approved Proposition 2 creating the current environmental tax exemption. The ballot read "The constitutional amendment to promote the reduction and encourage the preservation of jobs by authorizing the exemption from ad valorem taxation of real and personal property **used for the control of air, water, or land pollution**." These boilers are used for production and not to control pollution. I believe the majority of the people would have voted **"NO"** on this proposition, if they thought it would include production equipment that produces INCOME and is not MANDATED by law!

IV. Limitations

A detailed description of what will be exempted needs to be provided to the appraisal district and not just identifying the HRSG. If the HRSG is found to be pollution control equipment, where is the limit? Do we also include the deaerator, the condenser, the pumps and all of the other steam piping and equipment which is installed to produce INCOME? Should we also exempt the plant lighting since this yields fewer emissions than if they had gas lamps? Although there are safety and convenience reasons for electric lighting, the primary reason for their installation is economics - not pollution control.

The primary reason for building a cogeneration power plant is economics and not pollution control. If the gas turbine is removed, then all you need is a set of burners and an intake fan to have the same production on the steam side. Since this type of boiler is a major component of production, it is not pollution control equipment. Only the ducting that conducts the exhaust heat from the gas turbine to the boiler should receive a 100% exemption.

V. Conclusions

. The Texas Commission on Environmental Quality TCEQ rule changes in response to the 2007 Texas Legislature HB 3732 that created the new Part B non-exclusive list was intended to clarify pollution control devices not previously recognized. There was no mention of including equipment that is in place for producing a product.

The boiler in a cogeneration power plant is installed to produce steam to sell rather than to reduce pollution and does not qualify for a 100% tax exemption. **Therefore, I respectfully request that no Use Determination be granted for the primary boiler (HRSG) of any cogeneration power plant.** Thank you for your favorable consideration.