TEXAS COMMISSION ON ENVIRONMENTAL QUALITY

2008 MAY 23 AM 8:43

CHIEF CLERKS OFFICE

TEXAS COMMISSION ON ENVIRONMENTAL QUALITY
APPLICATION FOR USE DETERMINATION
FOR POLLUTION CONTROL PROPERTY

The TCEQ has the responsibility to determine whether a property is a pollution control property. A person seeking a use determination for pollution control property must complete the attached application or use a copy or similar reproduction. For assistance in completing this form refer to the TCEQ guidelines document, *Property Tax Exemptions for Pollution Control Property,* as well as 30 TAC §17, rules governing this program. For additional assistance please contact the Tax Relief for Pollution Control Property Program at (512) 239-3100. The application should be completed and mailed, along with a complete copy and appropriate fee, to: TCEQ MC-214, Cashiers Office, P.O. Box 13088, Austin, Texas 78711-3088.

1. GENERAL INFORMATION

A. What is the type of ownership of this facility?

- ☐ Corporation
- ☐ Sole Proprietor
- ☐ Partnership
- ☐ Utility
- ☑ Limited Partnership
- ☐ Other

B. Size of company: Number of Employees

- ☑ 1 to 99
- ☐ 1,000 to 1,999
- ☐ 100 to 499
- ☐ 2,000 to 4,999
- ☐ 500 to 999
- ☐ 5,000 or more

C. Business Description: **Electric Power Generation**

2. TYPE OF APPLICATION

- ☐ **Tier I $150 Application Fee**
- ☐ **Tier III $2,500 Application Fee**
- ☐ **Tier II $1,000 Application Fee**
- ☑ **Tier IV $500 Application Fee**

NOTE: Enclose a check, money order to the TCEQ, or a copy of the ePay receipt along with the applicaton to cover the required fee.

3. NAME OF APPLICANT

A. Company Name: Brazos Valley Energy L.P.

B. Mailing Address (Street or P.O. Box): 717 Texas, Ste. 1000

C. City, State, ZIP: Houston, TX 77002

4. PHYSICAL LOCATION OF PROPERTY REQUESTING A TAX EXEMPTION

A. Name of facility: Brazos Valley Energy

B. Type of Mfg Process or Service: Electric Power Generation

C. Street Address: 3440 Lockwood Road

D. City, State, ZIP: Richmond, Texas 77469

E. Tracking Number Assigned by Applicant: DPBrazosValley B

F. Customer Number or Regulated Entity Number: N/A

5. APPRAISAL DISTRICT WITH TAXING AUTHORITY OVER PROPERTY

A. Name of Appraisal District: Fort Bend

B. Appraisal District Account Number: 0348-00-000-0203-901; 0348-00-000-0204-901;

07-11969

6. CONTACT NAME (must be provided)

A. Company/Organization Name:	Duff and Phelps LLC	
B. Name of Individual to Contact:	Greg Maxim	
C. Mailing Address:	919 Congress Ave.	Suite 1450
D. City, State, ZIP:	Austin, TX 78701	
E. Telephone number and fax number:	(512) 671-5580	Fax (512) 671-5501
F. E-Mail address (if available):	gregory.maxim@duffandphelps.com	

7. RELEVANT RULE, REGULATION, OR STATUTORY PROVISION

Please reference Section 8. Each item is detailed with the proper statute, regulation, or environmental regulatory provision.

8. DESCRIPTION OF PROPERTY

Background

The Brazos Valley Power Plant is located in Richmond, Texas. Two combustion turbines are routed to two heat recovery steam generators which provide steam to one steam turbine. The Brazos Valley Power Plant sells the power it generates to Calpine Commercial Operations. The facility is located in Richmond, TX and has been in operation since May 2003. The facility has a baseload capacity of 508 megawatts and is 100 percent owned by Calpine. The technology employed is a natural gas-fired, combined-cycle GE combustion and steam turbines. Brazos Valley Power Plant serves the ERCOT region.

Overview of Combined Cycle Technology

The Facility is a combined-cycle gas turbine power plant consisting of gas Combustion Turbines ("CTs") equipped with heat recovery steam generators to capture heat from the gas turbine exhaust. Steam produced in the heat recovery steam generators powers a steam turbine generator(s) to produce additional electric power. The use of otherwise wasted heat in the turbine exhaust gas results in higher plant thermal efficiency compared to other power generation technologies. Combined-cycle plants currently entering service can convert over 50% of the chemical energy of natural gas into electricity (HHV basis). Employment of the Brayton Thermodynamic Cycle (Gas Turbine Cycle) in combination with the Rankine Thermodynamic Cycle results in the improved efficiency.

The Rankine cycle is a thermodynamic cycle that converts heat from an external source into work. In a Rankine cycle, external heat from an outside source is provided to a fluid in a closed-loop system. This fluid, once pressurized, converts the heat into work output using a turbine. The fluid most often used in a Rankine cycle is water (steam) due to its favorable properties, such as nontoxic and unreactive chemistry, abundance, and low cost, as well as its thermodynamic properties. The thermal efficiency of a Rankine cycle is usually limited by the working fluid. Without pressure reaching super critical the temperature range the Rankine cycle can operate over is quite small, turbine entry temperatures are

typically 565°C (the creep limit of stainless steel) and condenser temperatures are around 30°C. Traditional coal fired and natural gas fired Rankine cycle power generation plants are limited by the inlet pressures and temperatures of the steam turbine design and the condenser vacuum and temperature. The Rankine cycle can achieve thermodynamic cycle efficiency (useful work obtained as a percentage of fuel input) ranging from 33% to 36%. However, if the Rankine cycle is used in conjunction with or as the "bottoming" cycle to the Brayton cycle the efficiencies can be improved as discussed below. This low turbine entry temperature (compared with a gas turbine) is why the Rankine cycle is often used as a bottoming cycle in combined cycle gas turbine power stations.

The Brayton cycle is a constant pressure thermodynamic cycle that converts heat from combustion into work. A Brayton engine, as it applies to a gas turbine system, will consist of a fuel or gas compressor, combustion chamber, and an expansion turbine. Air is drawn into the compressor, mixed with the fuel, and ignited. The resulting work output is captured through a pump, cylinder, or turbine. A Brayton engine forms half of a combined cycle system, which combines with a Rankine engine to further increase overall efficiency. Cogeneration systems typically make use of the waste heat from Brayton engines, typically for hot water production or space heating.

By combining both gas and steam cycles, high input temperatures and low output temperatures can be achieved. The efficiency of the cycles are additive, because they are powered by the same fuel source. A combined-cycle plant has a thermodynamic cycle that operates between the gas turbine's high firing temperature and the waste heat temperature from the condensers of the steam cycle. This large range means that the Carnot efficiency of the cycle is high. The actual efficiency, while lower than this is still higher than that of either plant on its own. The thermal efficiency of a combined-cycle power plant is the net power output of the plant divided by the heating value of the fuel. Combined cycle power generation plants that produce only electricity can achieve thermodynamic efficiencies in the range of 53% to 59%, with the normal range being 53% to 56%. Combined cycle power generation plants that produce steam or hot water in conjunction with electric power can improve upon those values by "offsetting" fired boiler operations within adjacent industrial complexes. These facilities are known as combined cycle cogeneration units.

A single-train combined-cycle plant consists of one gas turbine generator, a heat recovery steam generator (HSRG) and a steam turbine generator ("1 x 1" configuration). As an example, an "FA-class" combustion turbine, the most common technology in use for large combined-cycle plants within the state of Texas and other locations throughout the United States, represents a plant with approximately 270 megawatts of capacity. ISO references ambient conditions at 14.7 psia, 59 F, and 60% relative humidity.

See Figure 1 – Standard Combined-Cycle Configuration, below.

It is common to find combined-cycle plants using two or even three gas turbine generators and heat recovery steam generators feeding a single, proportionally larger steam turbine generator. Larger plant sizes result in economies of scale for construction and operation, and designs using multiple combustion turbines provide improved part-load efficiency. A 2 x 1 configuration using FA-class technology will produce about 540 megawatts of capacity at International Organization for Standardization ("ISO") conditions. ISO references ambient conditions at 14.7 psia, 59 F, and 60% relative humidity.

Because of high thermal efficiency, high reliability, and lower air emissions, combined-cycle gas turbines have been the new resource of choice for bulk power generation for well over a decade. Other attractive features include significant operational flexibility, the availability of relatively inexpensive power augmentation for peak period operation and relatively low carbon dioxide production.

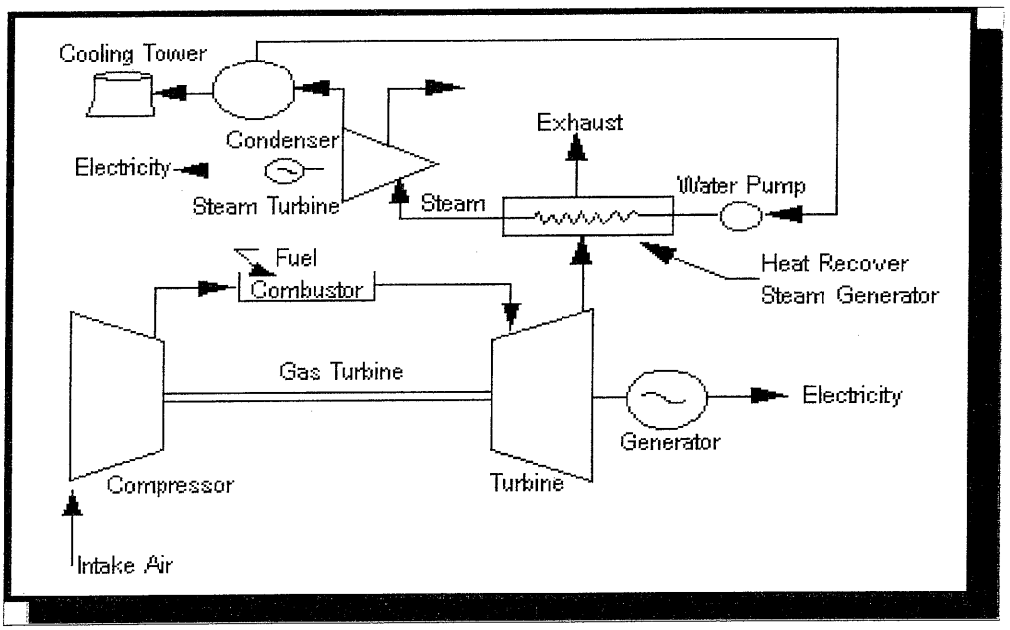

FIGURE 1 - Standard Combined-Cycle Configuration (1)

As an example, consider a gas turbine cycle that has an efficiency of 40%, which is a representative value for current Brayton Cycle gas turbines, and the Rankine Cycle has an efficiency of 30%. The combined-cycle efficiency would be 58%, which is a very large increase over either of the two simple cycles. Some representative efficiencies and power outputs for different cycles are shown in Figure 2 – Comparison of Efficiency and Power Output of Various Power Products, below.

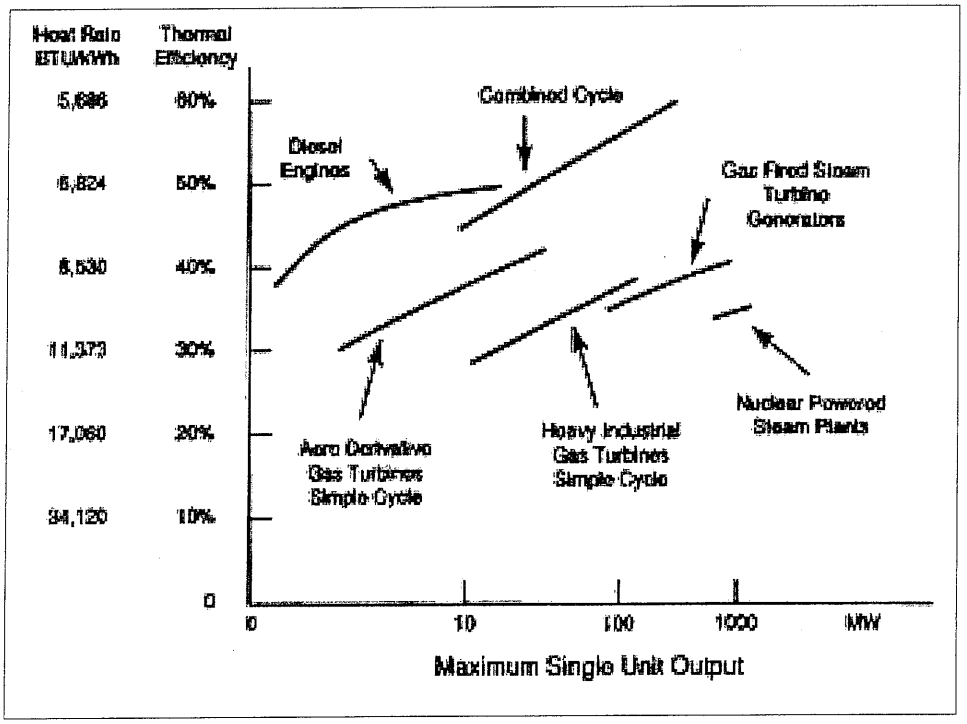

FIGURE 2 - Comparison of efficiency and power output of various power products [Bartol (1997)] (2)

Current Regulatory Authority for Output-Based Emissions

Innovative power technologies such as combined-cycle technology offer enormous potential to improve efficiency and enhance the environmental footprint of power generation through the reduction and/or prevention of air emissions to the environment. Currently, two thirds of the fuel burned to generate electricity in traditional fossil-fired steam boilers is lost. Traditional U.S. power generation facility efficiencies have not increased since the 1950s and more than one fifth of the U.S. power plants are more than 50 years old.(6) In addition, these facilities are the leading contributors to U.S. emissions of carbon dioxide, NOx, sulfur dioxide ("SO2"), and other contaminants into the air and water.

The ability to recognize and regulate the efficiency benefits of pollution reduction and/or prevention through the use of combined-cycle technology is achieved through the use of Output-Based emissions standards, incorporated since September 1998 within the U.S. EPA's new source performance standards ("NSPS") for NOx, from both new utility boilers and new industrial boilers. Pursuant to section 407(c) of the Clean Air Act in subpart Da (Electric Utility Steam Generating Units) and subpart Db (Industrial-Commercial-Institutional Steam Generating Units) of 40 CFR part 60, the U.S. EPA revised the NOx emissions limits for steam generating units for which construction, modification, or reconstruction commenced after July 9, 1997 (3). Output-Based regulations are also exemplified by those used in the U.S. EPA's NOx Cap and Trade Program for the NOx State Implementation Plan

("SIP") Call of 1998, which uses units of measure such as lb/MWh generated or lb concentration ("ppm"), which relate to the emissions to the productive output – electrical generation of the process.(4)

The use of innovative technologies such as combined-cycle units reduces fossil fuel use and leads to multi-media reductions in the environmental impacts of the production, processing transportation, and combustion of fossil fuels. In addition, reducing fossil fuel combustion is a pollution prevention measure that reduces emissions of all products of combustion, not just the target pollutant (currently NOx) of a federal regulatory program.

Authority to Expand Pollution Control Equipment & Categories in Texas

Under Texas House Bill 3732 ("HB3732") enacted in 2007, Section 11.31 of the Texas Tax Code is amended to add certain plant equipment and systems to the current list of air, water, or land pollution control devices exempt from property taxation in Texas.

Specifically, the language reads as follows:

> *SECTION 4. Section 11.31, Tax Code, is amended by adding Subsections (k), (l), and (m) to read as follows:*
> *(k) The Texas Commission on Environmental Quality shall adopt rules establishing a nonexclusive list of facilities, devices, or methods for the control of air, water, or land pollution, which must include:*
> *(1) coal cleaning or refining facilities;*
> *(2) atmospheric or pressurized and bubbling or circulating fluidized bed combustion systems and gasification fluidized bed combustion combined-cycle systems;*
> *(3) ultra-supercritical pulverized coal boilers;*
> *(4) flue gas recirculation components;*
> *(5) syngas purification systems and gas-cleanup units;*
> *(6) enhanced heat recovery systems;*
> *(7) exhaust heat recovery boilers;*
> *(8) heat recovery steam generators;*
> *(9) superheaters and evaporators;*
> *(10) enhanced steam turbine systems;*
> *(11) methanation;*
> *(12) coal combustion or gasification byproduct and coproduct handling, storage, or treatment facilities;*
> *(13) biomass cofiring storage, distribution, and firing systems;*
> *(14) coal cleaning or drying processes, such as coal drying/moisture reduction, air jigging, precombustion decarbonization, and coal flow balancing technology;*
> *(15) oxy-fuel combustion technology, amine or chilled ammonia scrubbing, fuel or emission conversion through the use of catalysts, enhanced scrubbing technology, modified combustion technology such as chemical looping, and cryogenic technology;*
> *(16) if the United States Environmental Protection Agency adopts a final rule or regulation regulating carbon dioxide as a pollutant, property that is used, constructed, acquired, or installed wholly or partly to capture carbon dioxide from an anthropogenic source in this state that is geologically sequestered in this state;*
> *(17) fuel cells generating electricity using hydrogen derived from coal, biomass, petroleum coke, or solid waste; and*
> *(18) any other equipment designed to prevent, capture, abate, or monitor nitrogen oxides, volatile organic compounds, particulate matter, mercury, carbon monoxide, or any criteria pollutant.*
> *(l) The Texas Commission on Environmental Quality by rule shall update the list adopted under Subsection (k) at least once every three years. An item may be removed from the list if the commission finds compelling evidence to support the conclusion that the item does not provide pollution control benefits.*
> *(m) Notwithstanding the other provisions of this section, if the facility, device, or method for the*

control of air, water, or land pollution described in an application for an exemption under this section is a facility, device, or method included on the list adopted under Subsection (k), the executive director of the Texas Commission on Environmental Quality, not later than the 30th day after the date of receipt of the information required by Subsections (c)(2) and (3) and without regard to whether the information required by Subsection (c)(1) has been submitted, shall determine that the facility, device, or method described in the application is used wholly or partly as a facility, device, or method for the control of air, water, or land pollution and shall take the actions that are required by Subsection (d) in the event such a determination is made.

Under the TCEQ's recently updated "Tax Relief for Pollution Control Property – Application Instructions and Equipment and Categories List – Effective January 2008", the Equipment and Categories List - Part B ("ECL Part B") is a list of the pollution control property categories adopted and set forth in TTC Sec. 26.045(f). The taxpayer is to supply a pollution control percentage for the equipment listed in Part B via calculations demonstrating pollution control, prevention and/or reductions achieved by the listed equipment or systems.

The following property descriptions outline the environmental purpose, including the anticipated environmental benefit of pollution control additions considered under the Application Instructions' ECL Part B that have been constructed and placed into use at the Facility as of its placed-in-service date, or installed subsequent to in-service since 1994:

Property Descriptions

Item #1 Combined-Cycle Gas Turbine Plant Heat Recovery Steam Generator ("HRSG") and Support Systems Tier IV B-8

40 CFR Part 60 Subparts DA and DB, NOx Limits for Electric Utility Steam Generating Units and Industrial-Commercial-Institutional Steam Generating Units for New Source Performance Standards ("NSPS").

TAC Rule 106.512, Standard Permit for Electric Generating Units (EGU)

NOTE: Permits issued under Texas Clean Air Act's Health & Safety Code Sections 382.011, applies to all electric generating units that emit air contaminants, regardless of size, and it is to reflect Best Available Control Technology ("BACT") for electric generating units on an output basis in pounds of NOx per megawatt hour, adjusted to reflect a simple cycle power plant.

The heat recovery steam generator ("HRSG") found in the Facility is a heat exchanger that recovers heat from a hot gas stream. It produces steam that can be used in a process or used to drive a steam turbine. A common application for an HRSG is in a combined-cycle power station, where hot exhaust from a gas turbine is fed to an HRSG to generate steam which in turn drives a steam turbine. This combination produces electricity in a more thermally efficient manner than either the gas turbine or steam turbine alone.

The Facility's HRSGs consist of three major components: the Evaporator, Superheater, and Economizer. The different components are put together to meet the operating requirements of the unit. Modular HRSGs normally consist of three sections: an LP (low pressure) section, a reheat/IP (intermediate pressure) section, and an HP (high pressure) section. The reheat and IP sections are separate circuits inside the HRSG. The IP steam partly feeds the reheat section. Each section has a steam drum and an evaporator section where water is converted to steam. This steam then passes through superheaters to raise the temperature and pressure past the saturation point.

Item #2 Steam Turbine and Support Systems Tier IV B-10

40 CFR Part 60 Subparts DA and DB, NOx Limits for Electric Utility Steam Generating Units and Industrial-Commercial-Institutional Steam Generating Units for New Source Performance Standards ("NSPS").

TAC Rule 106.512, Standard Permit for Electric Generating Units (EGU)

NOTE: Permits issued under Texas Clean Air Act's Health & Safety Code Sections 382.011, applies to all electric generating units that emit air contaminants, regardless of size, and it is to reflect Best Available Control Technology ("BACT") for electric generating units on an output basis in pounds of NOx per megawatt hour, adjusted to reflect a simple cycle power plant.

The steam turbine(s) found in the Facility operate on the Rankine cycle in combination with the Brayton cycle, as described above. Steam created in the Facility HRSG(s) from waste heat that would have otherwise been lost to the atmosphere enters the steam turbine via a throttle valve, where it powers the turbine

and connected generator to make electricity. Use of HRSG/Steam Turbine System combination provides the Facility with an overall efficiency of greater than 50%. Steam turbine systems similar to the Facility's have a history of achieving up to 95% availability on an annual basis and can operate for more than a year between shutdown for maintenance and inspections. (5)

Pollution Control Percentage Calculation: Avoided Emissions Approach

To calculate the percentage of the equipment or category deemed to be pollution control equipment, the Avoided Emissions approach has been used. This approach relies on thermal output differences between a conventional power generation system and the combined-cycle system at the Facility. Specifically, the percentage is determined by calculating the displacement of emissions associated with the Facility's thermal output and subtracting these emissions from a baseline emission rate. These displaced emissions are emissions that would have been generated by the same thermal output from a conventional system.

Greater energy efficiency reduces all air contaminant emissions, including the greenhouse gas, carbon dioxide. Higher efficiency processes include combined-cycle operation and combined heat and power ("CHP") generation. For electric generation the energy efficiency of the process expressed in terms of millions of British thermal units ("MMBTU's") per Megawatt-hour. Lower fuel consumption associated with increased fuel conversion efficiency reduces emissions across the board – that is NOx, SOx, particulate matter, hazardous air pollutants, and greenhouse gas emissions such as CO2.

In calculating the percent exempt for the listed items from the ECL-Part B, we utilized Output-Based NOx allocation method for both power generation projects that replaced existing facilities and "Greenfield" power and heat generation facilities. We looked at the various fossil fuel technologies in use today and chose the baseline facility to be a natural gas fuel-fired steam generator. We benchmarked this conventional generation to the subject natural gas-fired combined cycle generator at the Facility. By doing so, we narrowed the heat rate factors as much as possible to be conservative and uniform in modeling. The benchmark heat rate factor is the following:

Natural Gas fuel-fired Steam Generator: 10,490 BTU's/kWh

This baseline heat rate purposely omits other fossil fuel sources in order to eliminate impurity type characteristics, which in turn eliminated the NOx emission and cost of control differences of each fossil fuel and generator type. Comparing the emissions impact of different energy generation facilities is concise when emissions are measured per unit of useful energy output. For the purpose of our calculations, we converted all the energy output to units of MWh (1 MWh = 3.413 MMBTU), and compared the total emission rate to the baseline facility.

The comparison steps to calculate the NOx reduction is as follows:

Calculation (Reference Schedule A)

Step 1 – Subject Output-Based Limit Calculation (lbs NOx / MWh)

(Input-based Limit (lbs NOx/MMBTU)) X (Heat Rate (Btu/kWh)) / (1,000,000 Btu / 1,000 kWh) = Output: (lbs NOx/MWh),

Step 2 – Subject Output Conversion Calculation (NOx Tons / Year)

(Output (lbs NOx/MWh) X (Unit Design Capacity (MW)) X (Capacity Factor) X ((365 Days) X (24 hrs/day)) / 2,000 lbs = Output: (NOx Tons/Year)

Step 3 – Baseline Output-Based Limit Calculation (lbs NOx / MWh)

(Input-based Limit (lbs NOx/MWh)) X (Heat Rate (Btu/kWh)) / (1,000,000 Btu / 1,000 kWh) = Output: (lbs NOx/MWh)

Step 4 – Baseline Output Conversion Calculation (NOx Tons / Year)

(Output (lbs NOx/MMBtu) X (Unit Design Capacity (MW)) X (Capacity Factor) X ((365 Days) X (24 hrs/day)) / 2,000 lbs = Output: (NOx Tons/Year)

Step 5 – Percent NOx Reduction Calculation

$((\text{Output Baseline})_{\text{step 4}} - (\text{Output Subject}))_{\text{step 2}} \ / \ (\text{Output Subject})_{\text{step 2}}$ = % Reduction Output Subject

Step 6 – Percent Exempt Calculation

(Total Subject Facility Cost) X (% NOx Reduction) = Capital Cost of NOx Avoidance

Step 7 – Percent Exempt Calculation

Total Cost of NOx Avoidance / Total Cost of HB 3732 Equipment = % Exempt

- If % Exempt is greater than 100% HB 3732 Equipment is 100% Exempt
- If % Exempt is less than 100% then HB 3732 Equipment is partially exempt at the Step 6 calculation.

NOTE: See the attached calculation sheet for the details regarding Facility-specific calculations and property tax exemption percentage results based upon these calculations.

REFERENCES

1. "Output-Based Regulations: A Handbook for Air Regulators", U.S. Environmental Protection Agency, Office of Atmospheric Programs – Climate Protection Partnerships Division, August, 2004, p.4.

2. "Output-Based Emissions Standards; Advancing Innovative Energy Technologies", Northeast-Midwest Institute; 2003, p. 9.

3. IBID, p.13.

4."Output-Based Regulations: A Handbook for Air Regulators", U.S. Environmental Protection Agency, Office of Atmospheric Programs – Climate Protection Partnerships Division, August, 2004, p.4.

5. http://www.cogeneration.net/Combined_Cycle_Power_Plants.htm

6. "Output-Based Emissions Standards; Advancing Innovative Energy Technologies", Northeast-Midwest Institute; 2003, p. 9.

9. PARTIAL PERCENTAGE CALCULATION

N/A.

10. PROPERTY CATEGORIES AND COSTS

See attached Schedule 10.

11. EMISSION REDUCTION INCENTIVE GRANT

Will an application for an Emission Reduction Incentive Grant be on file for this property/project:

[ ] Yes [X] No

12. APPLICATION DEFICIENCIES

After an initial review of the application, the TCEQ may determine that the information provided with the application is not sufficient to make a use determination. The TCEQ may send a notice of deficiency, requesting additional information that must be provided within 30 days of written notice.

13. FORMAL REQUEST FOR SIGNATURE

By signing this application, you certify that this information is true to the best of your knowledge and belief.

NAME: _____ DATE: 25 MARCH 2008

TITLE: Director

COMPANY: Duff & Phelps LLC

Under Texas Penal Code, Section 37.10, if you make a false statement on this application, you could receive a jail term of up to one year and a fine up to $2,000, or a prison term of two to 10 years and a fine of up to $5,000.

14. DELINQUENT FEE/PENALTY PROTOCOL

This form will not be processed until all delinquent fees and/or penalties owed to the TCEQ or the Office of the Attorney General on behalf of the TCEQ are paid in accordance with the Delinquent Fee and Penalty Protocol. (Effective 9/1/2006)

Calpine
Brazos Valley
TCEQ Use Determination Application - 2008
Schedule 10
Tier IV

10. PROPERTY CATEGORIES AND COST

PROPERTY	PROJECT ID. NO.	IN SERVICE DATE	TAXABLE ON OR BEFORE 1/1/94? (Y / N)	TIER IV DECISION FLOW CHART BOX	ECL NUMBER	ESTIMATED PURCHASE COST	% EXEMPT	EXEMPT COST
Heat Recovery Steam Generators (HRSG)	1	2003	N	3	B-8	$ 39,913,424	100%	$ 39,913,424
Steam Turbine Systems	2	2003	N	3	B-10	$ 17,000,000	100%	$ 17,000,000
					Tier IV Total	$ 56,913,424		$ 56,913,424

Calpine
Brazos Valley
Schedule A - 2008 Thermal Efficiency Calculation

Subject Details:

Average Heat Rate [1]		7,050 (Btu/kWh)
NOx Emissions [2]		117.18 Tons / year
Plant Capacity [3]		550 MW
Capacity Factor [4]		69.96%
Technology [5]		Combined Cycle
Total Subject Facility Cost [6]	$	290,000,000
Total Cost of Tier IV Equipment [7]	$	56,913,424

Baseline Details:

Average Heat Rate [8]		10,490 Btu/kWh
Technology [9]		Steam Turbine

STEP 1
Subject Output-Based Limit Calculation (lbs NOx / MWh)

Input-based Limit (lbs NOx/MMBtu)	x	Heat Rate (Btu/kWh)	/	Unit Conversions (1,000,000 Btu / 1000 kWh)	=	Output-based Limit (lbs NOx/MWh)
0.0108		7,050		1,000		0.0761

STEP 2
Subject Output Conversion Calculation (NOx Tons / Year)

Output-based Limit (lbs NOx/MWh)	x	Capacity (MW)	x	Capacity Factor	x	Unit Conversions (365 days * 24 Hours / 2,000 lbs)	=	Output NOx (Tons/Year)
0.0761		550		69.96%		4		117.2

STEP 3
Baseline Output-Based Limit Calculation (lbs NOx / MWh)

Input-based Limit (lbs NOx/MMBtu)	x	Heat Rate (Btu/kWh)	/	Unit Conversions (1,000,000 Btu / 1000 kWh)	=	Output-based Limit (lbs NOx/MWh)
0.0108		10,490		1,000		0.1133

STEP 4
Baseline Output Conversion Calculation (NOx Tons / Year)

Output-based Limit (lbs NOx/MWh)	x	Capacity (MW)	x	Capacity Factor	x	Unit Conversions (365 days * 24 Hours / 2,000 lbs)	=	Output NOx (Tons/Year)
0.1133		550		69.96%		4		174.4

STEP 5
Percent NOx Reduction Calculation

(Output Baseline	-	Output Subject)	/	Output Subject	=	% NOx Reduction
174.4		117.2		117.2		48.8%

STEP 6
Percent Exempt Calculation

Total Subject Unit Cost	X	% NOx Reduction	=	Capital Cost of NOx Avoidance
$290,000,000		48.8%		$141,520,000

STEP 7
Percent Exempt Calculation

Total Cost of NOx Avoidance	/	Total Cost of HB 3732 Equipment	=	% Exempt
$141,520,000		$56,913,424		248.7%

Conclude	100%

(1) - Heat rate represents plant actual heat rate (HHV) and was provided by the client
(2) - NOx emissions is the actual NOx pollutant produce in ppm and was provide by the client
(3) - Plant capacity is the average nominal capacity and was provided by the client
(4) - Capacity factor represent an average annual capacity factor and was provided by the client
(5) - Technology represents the actual technology of the subject
(6) - Total subject facility cost represents the total cost to build the entire facility and it was determined based on data provide by the client
(7) - Total Tier IV equipment was determined by allocating the eligible TCEQ ECL part B equipment and their associated cost from actual data provide by the client
(8) - Baseline heat rate was published by the Energy Information Administration ("EIA")
(9) - Baseline technology represents the technology that the subject would have replaced at the time of the subjects construction

Buddy Garcia, *Chairman*
Larry R. Soward, *Commissioner*
Bryan W. Shaw, Ph.D., *Commissioner*
Glenn Shankle, *Executive Director*

TEXAS COMMISSION ON ENVIRONMENTAL QUALITY

Protecting Texas by Reducing and Preventing Pollution

May 1, 2008

CHIEF APPRAISER
FORT BEND COUNTY APPRAISAL DISTRICT
2801 B F TERRY BLVD
ROSENBERG, TX 77471

This letter is to inform you that on 5/1/2008, a final determination was issued with regard to Use Determination application 07-11969, filed by:

BRAZOS VALLEY ENERGY LP
BRAZOS VALLEY ENERGY
3440 LOCKWOOD RD
RICHMOND, TX 77469

A copy of the use determination is included with this letter. House Bill 3121, enacted during the 77th Legislature Session, established a process for appealing a use determination. The Texas Commission on Environmental Quality (TCEQ) rules that implement the appeals process are at 30 TAC 17.25. Pursuant to 17.25(a)(1), an appeal must be filed within 20 days of receipt of the use determination. Should you choose to appeal the use determination, please submit a copy of your appeal to the TCEQ Tax Relief for Pollution Control Property program at the time of filing the appeal with the Chief Clerk of the commission.

In order to qualify for a tax exemption, the applicant must file an exemption request with your appraisal district. This exemption request must be accompanied by a copy of the positive use determination issued by the TCEQ. If you have any questions regarding this Use Determination or the appeals process, please call me at 512/239-3100.

Sincerely,

David Greer
Team Leader, Pollution Prevention

Buddy Garcia, *Chairman*
Larry R. Soward, *Commissioner*
Bryan W. Shaw, Ph.D., *Commissioner*
Glenn Shankle, *Executive Director*

TEXAS COMMISSION ON ENVIRONMENTAL QUALITY

Protecting Texas by Reducing and Preventing Pollution

May 1, 2008

DUFF & PHELPS LLC
GREG MAXIM
919 CONGRESS #1450
AUSTIN, TX 78701

This letter is to inform you that on 5/1/2008, the technical review of Use Determination Application 07-11969 was completed. This application is for:

BRAZOS VALLEY ENERGY LP
BRAZOS VALLEY ENERGY
3440 LOCKWOOD RD
RICHMOND, TX 77469

The use determination is included with this letter. In order to request an exemption, a copy of this Use Determination, along with a completed exemption request form #50-248 (can be found at www.cpa.state.tx.us), must be provided to the Chief Appraiser of the appropriate appraisal district. This request must be made by April 30.

House Bill 3121, enacted during the 77th Legislative Session, established a process for appealing a use determination. The Texas Commission on Environmental Quality (TCEQ) rules that implement the appeals process are at 30 TAC 17.25. Pursuant to 17.25(a)(1), an appeal must be filed within 20 days of receipt of the use determination. Should you choose to appeal the use determination, please submit a copy of your appeal to the TCEQ Tax Relief for Pollution Control Property program at the time of filing the appeal with the Chief Clerk of the commission.

If you have any questions or require any additional information, please contact the Tax Relief for Pollution Control Property Program at (512) 239-3100.

Sincerely,

David Greer
Team Leader, Pollution Prevention

Buddy Garcia, *Chairman*
Larry R. Soward, *Commissioner*
Bryan W. Shaw, Ph.D., *Commissioner*
Glenn Shankle, *Executive Director*

TEXAS COMMISSION ON ENVIRONMENTAL QUALITY

Protecting Texas by Reducing and Preventing Pollution

USE DETERMINATION

The Texas Commission on Environmental Quality has reviewed Use Determination Application, **07-11969**, filed by:

BRAZOS VALLEY ENERGY LP
BRAZOS VALLEY ENERGY
3440 LOCKWOOD RD
RICHMOND TX 77469

The pollution control property/project listed in the Use Determination Application is:

This facility has two thermally efficient heat recovery steam generators (HRSGs) and one steam turbine. This application is a Tier IV application seeking a partial use determination for the HRSGs and the enhanced steam turbines.

The outcome of the review is:

A 100% positive use determination for the two Heat Recovery Steam Generators. This equipment is considered to be pollution control equipment and was installed to meet or exceed federal or state regulations.

A negative determination is issued for the steam turbine. The use of the steam turbine does not provide an environmental benefit at the site. The steam turbine is not considered to be pollution control equipment.

Executive Director

May 2 2008
Date

TAX RELIEF FOR POLLUTION CONTROL PROPERTY: TECHNICAL REVIEW DOCUMENT

Reviewed By: RLH App. No.: 07 - 11969 Review Start Date: 4/8/2008

Company Name: BRAZOS VALLEY ENERGY LP
Facility Name: BRAZOS VALLEY ENERGY
County: FORT BEND Outstanding Fees: N
Batch/Voucher Number:B500156

ADMINISTRATIVE REVIEW

Administrative Complete Date:4/8/2008

TIER LEVEL
What Tier is this application? The application was filed as a Tier IV application. Is this the appropriate level?

The property listed on this application, Heat Recovery Steam Generators and a steam turbine are items B8 and B10 on the Equipment and Categories List. This application was filed as a Tier IV. Tier IV is the appropriate level for this application.

RELEVANT RULE, REGULATION, OR STATUTORY PROVISION
The rule listed in the application is: 40 CFR 60.44Da
The appropriate rule is: 40 CFR 60.44Da

Explain why this is the appropriate rule?

40 CFR 60.Subpart DA: Standards of Performance for New Stationary Sources. Standards of performance for Electric Utility Steam Generating Units for Which Construction is Commenced after September 18, 1978. This is an appropriate rule.

BRIEF DESCRIPTION OF PROPERTY
The property is described as:

This facility has two thermally efficient heat recovery steam generators (HRSGs) and one steam turbine. This application is a Tier IV application seeking a partial use determination for the HRSGs and the enhanced steam turbines.

Is an adequate description and purpose of the property provided? Does it list the anticipated environmental benefits? Are sketches and flow diagrams provided if needed?

An adequate description of the property was provided, and the purpose of the property was listed. The anticipated environmental benefit is listed. Sketches and flow diagrams were provided.

DECISION FLOWCHART(30 TAC 17.15(a))
Mark the appropriate boxes: Box 3 Box 5 Box 6(IV) Y Box 10(III) Box 12(I) Box 13(II)
PART B DECISION FLOWCHART (17.15(b))
Mark the appropriate boxes: Box 1Y Box 2 Y Box 3 Y

Describe how the property flowed through the Decision Flowchart:

Since the property is listed on Part B of the Equipment & Categories List this property leaves the Decision Flow Chart at Box 6. It passes through Box 1 of the Part B Decision Flow Chart with a yes answer. The use of this property at a combined cycle plant, as opposed to having a simple

cycle plant, provides an environmental benefit of reduced NOx emissions at the site. So there is a Yes answer for Box 2, Since there is a reduction in NOx emissions there is an environmental rule which is being met so there is a yes answer to Box 3. The steam turbine passes through Box 1 on the Part B Decision Flow Chart with a yes answer. Since the use of the steam turbine does not provide an environmental benefit at the site a no answer is the result of Box 2. The steam turbine is not eligible for a positive determination.

TIER III or IV APPLICATIONS

Does your calculation agree with the applicants?

No. The application contains a proposed formula for calculating the pollution control value of the HRSGs and the steam turbine. The formula is outcome determinative, and its focus is not on the pollution control aspect of the property. The Executive Director disagrees with this formula.

PROPERTY CATEGORIES AND COSTS

Is the table completed correctly? Has the applicant certified that all listed property became taxable for the first time after January 1, 1994? Is all information necessary for conducting the technical review included.

The table was completed correctly. The applicant certified that all listed property became taxable for the first time after January 1, 1994. All the information necessary for conducting the technical review was included on the application.

TECHNICAL DEFICIENCIES

Is the application complete as received: Y **If the application was not administratively complete explain below when justifying the final decision in the final determination section. If the application was not technically complete then:**

Provide the language to be used in the Notice of Deficiency (NOD) letter:

Summarize the NOD response:

Provide the language used in the second NOD letter:

Summarize the second NOD response:

Provide the language used in the thied NOD letter:

Summarize the third NOD response:

FINAL DETERMINATION

If the property description has been summarized enter the detailed property description:

This facility has two thermally efficient heat recovery steam generators (HRSGs) and one steam

turbine. This application is a Tier IV application seeking a partial use determination for the HRSGs and the enhanced steam turbines.

Provide the reason for your final determination:

The Heat Recovery Steam Generators meet all of the requirements of Chapter 17. A positive use determination based on the most appropriate formula should be issued for the Heat Recovery Steam Generators. The most appropriate formula has been determined by the Executive Director. A negative determination should be issued for the steam turbine. The use of the steam turbine does not result in there being an environmental benefit at the site.

Provide the language for the final determination.

A positive use determination of 100% for the two Heat Recovery Steam Generators. A negative determination is issued for the steam turbine. The use of the steam turbine does not provide an environmental benefit at the site. The steam turbine is not considered to be pollution control equipment.

Highlight the required signatures and establish the appropriate due dates.

Reviewed: Ronald Hall **Date Signed:** 5/1/08

Peer Reviewed: Gary McCrotham **Date Signed:** 5-1-08

Team Leader: Daniel [illegible] **Date Signed:** 5/1/08

Section Manager: [illegible] **Date Signed:** MAY 1 2008

Division Director: [illegible] **Date Signed:** MAY 1 2008

Buddy Garcia, *Chairman*
Larry R. Soward, *Commissioner*
Bryan W. Shaw, Ph.D., *Commissioner*
Glenn Shankle, *Executive Director*

TEXAS COMMISSION ON ENVIRONMENTAL QUALITY

Protecting Texas by Reducing and Preventing Pollution

April 8, 2008

DUFF & PHELPS LLC
GREG MAXIM
919 CONGRESS #1450
AUSTIN TX 78701 -

This letter is to inform you that on **4/8/2008**, Use Determination Application, **07-11969** (self assigned tracking number **DPBRAZOSVALLEY B**), was declared to be administratively complete. This application was filed for the following facility:

BRAZOS VALLEY ENERGY
3440 LOCKWOOD RD
RICHMOND TX 77469

The next step in the Use Determination Application process is the technical review of the application. If this is a Tier I, II, or III application the technical review will be completed within sixty days of the administrative complete date. If this is a Tier IV application the technical review will be completed within 30 days of the administrative complete date. If additional technical information is required a notice of deficiency letter (NOD) will be issued. The time period between the issuance of the NOD and the receipt of the response is not counted in determinating the length of the technical review .The TCEQ will notify you after the technical review has been completed. In accordance with the statute, the TCEQ has mailed a notice of receipt of this Use Determination Application to the **FORT BEND** County Appraisal District. Please contact the Tax Relief for Pollution Control Property Program at (512) 239-3100 if you have any questions.

Sincerely,

Ron Hatlett
Tax Relief for Pollution Control Property Program

Buddy Garcia, *Chairman*
Larry R. Soward, *Commissioner*
Bryan W. Shaw, Ph.D., *Commissioner*
Glenn Shankle, *Executive Director*

TEXAS COMMISSION ON ENVIRONMENTAL QUALITY

Protecting Texas by Reducing and Preventing Pollution

March 28, 2008

CHIEF APPRAISER
FORT BEND COUNTY APPRAISAL DISTRICT
2801 B F TERRY BLVD
ROSENBERG TX 77471

This letter is to inform you that a Use Determination Application has been filed by:

BRAZOS VALLEY ENERGY LP

for:

BRAZOS VALLEY ENERGY
3440 LOCKWOOD RD
RICHMOND TX 77469-

Appraisal District Account Number: **0348-00-000-0203-901**

This facility is located in **FORT BEND** County.

A complete copy of the application is included with this letter. We recommend that a copy of this application be shared with the person who conducts the appraisal of this property.

This application has been assigned a tracking number of **07 -11969**. Please contact the Tax Relief for Pollution Control Property Program at (512) 239-3100 if you have any questions.

Sincerely,

Ron Hatlett
Tax Relief for Pollution Control Property Program

DUFF AND PHELPS LLC · 919 CONGRESS AVENUE SUITE 1450 · AUSTIN TX 78701 · TEL [illegible] · FAX [illegible]

DUFF & PHELPS

Greg Maxim
Director
Phone:(512) 671-5580
gregory.maxim@duffandphelps.com

March 20, 2008

TCEQ - Cashiers Office MC-214
Building A
12100 Park 35 Circle
Austin, Texas 78753

Subject: Application for Use Determination for Pollution Control Property
Brazos Valley Energy - 3440 Lockwood Road Richmond, Texas 77469

Enclosed please find one application (the "Application") for property tax exemptions for certain qualifying pollution control property at the Brazos Valley Energy Project (the "Facility") in Fort Bend County, Texas.

Pursuant to Title 30 of Chapter 17 of the Texas Administrative Code, the Application has been prepared using the Texas Commission on Environmental Quality ("TCEQ") Application for Use Determination for Pollution Control Property. The enclosed application is a Tier IV Application.

Submission of this Application is required as a process step in the TCEQ's pollution control certification process for tax exemption of certain assets used in pollution control capacities within the Facility. As outlined by the application instructions, the fee for this Tier IV Application is $500. Enclosed please find a check for $500 for the Application processing.

The Application can be summarized as follows:

Property	Description	Estimated Cost
Tier IV	**See Attached Schedule**	**$56,913,424**

Please send one copy of the completed property tax exemption Use Determination to the following address:

Duff and Phelps LLC
c/o Greg Maxim
919 Congress Ave.
Suite 1450
Austin, TX 78701

If you have any questions regarding the Application or the information supplied with these Application, please contact Greg Maxim of Duff & Phelps, LLC at (512) 671-5580 or e-mail at gregory.maxim@duffandphelps.com.

Very truly yours,

DUFF & PHELPS LLC

Signature:

Name: Greg Maxim

Title: Director

Enclosures