JACKSON WALKER L.L.P.
ATTORNEYS & COUNSELORS

Michael J. Nasi
(512) 236-2216 (Direct Dial)
(512) 391-2194 (Direct Fax)
mnasi@jw.com

2014 JUN 30 PM 4:01
CHIEF CLERKS OFFICE
TEXAS COMMISSION ON ENVIRONMENTAL QUALITY

June 30, 2014

VIA Hand Delivery
Bridget C. Bohac, Chief Clerk
Texas Commission on Environmental Quality
12100 Park 35 Circle
Building F, 1st Floor
Austin, Texas 78753

RE: CER-Colorado Bend Energy, LLC (formerly known as Navasota Wharton Energy Partners, L.P.)
Colorado Bend Facility, Wharton, Wharton County, Texas
Appeal of June 5, 2014 and June 17, 2014 Negative Use Determination
Application No. 11926

Dear Ms. Bohac:

CER-Colorado Bend Energy, LLC (formerly known as Navasota Wharton Energy Partners, L.P.) (***"Applicant"*** or ***"Colorado Bend"***) is in receipt of the Executive Director's letters dated June 5, 2014, and June 17, 2014, notifying it of a negative use determination (the "***Determination***") for Application No. 11926 (the "***Application***").

I. Procedures for Appeal

Applicant disagrees with the Determination and pursuant to 30 TAC 17.25 hereby provides:

(1) the name, address, and daytime telephone number of the person filing the appeal is:

Mike Nasi
Jackson Walker L.L.P. 100 Congress Ave., Suite 1100
Austin, Texas 78701
512-236-2216

As legal counsel to:

CER-Colorado Bend Energy, LLC

(2) the name and address of the entity to which the use determination was issued:

CER-Colorado Bend Energy, LLC[1]
Attn: Barbara Cherry
Assistant Attorney General
100 Constellation Way, Suite 1700P
Baltimore, MD 21202

(3) the use determination application number for the Application was:

No. 11926

(4) request Commission consideration of the use determination:

Applicant hereby requests the Commission to hear and consider the merits of the Application and reach a determination that a positive use determination is appropriate; in the alternative, Applicant requests that the Commission reach a determination that the negative use determination is not appropriate and the matter should be remanded back to the Executive Director for a determination that the property in question is eligible for a positive use determination.

Furthermore, Applicant reiterates its Request for Reversal of the June 29, 2012 Remand issued by the Commission in TCEQ Docket No. 2008-0851-MIS-U regarding the positive use determination issued by the Executive Director to the Applicant on May 1, 2008.

(5) The basis for the appeal is set forth in full in the attached brief.

Sincerely,

for Michael J. Nasi
Counsel for CER-Colorado Bend Energy, LLC

[1] CER-Colorado Bend Energy, LLC was formerly known as Navasota Wharton Energy Partners, L.P. The legal entity and project owner has remained in existence during all relevant time periods, and underwent a ministerial name change by filing an Amendment to Registration with the Texas Secretary of State on July 23, 2010.

APPEAL OF NEGATIVE USE DETERMINATIONS ISSUED TO CER-COLORADO BEND ENERGY, LLC

CER-Colorado Bend Energy, LLC ("Applicant" or "Colorado Bend") files this appeal of the negative use determination issued by the Executive Director ("ED") on June 5, 2014 and June 17, 2014[2] For the reasons articulated below, the Applicant respectfully requests that the Texas Commission on Environmental Quality ("TCEQ" or "Commission") sustain the Applicant's appeal of the negative use determination and order that a positive use determination is appropriate using the clarified CAP Model proposed by Applicant. In the alternative, Applicant requests that the Commission remand the matter to the ED with specific instructions to revisit the pollution control aspects of the subject property and use the tools Applicant has provided to bring this long-overdue use determination to a close in a way that comports with applicable law.

In an effort to limit the volume of briefing material filed with the Commission, Applicant incorporates by reference its briefing filed in Docket No. 2008-0851-MIS-U and reiterates the arguments made therein.[3] It is also worth noting that the Commission never spoke to Applicant's Request for Reversal of the June 29, 2012 Remand.[4] Applicant requests that the Commission address the merits of this issue, reverse the remand issued by the General Counsel, and take up for the first time the previously pending appeal of that positive use determination consistent with the requirements of Section 11.31(e) of the Texas Tax Code.

SUMMARY OF ARGUMENT

Upon review of the comments by the Commissioners during the December 5, 2012 Agenda discussion, the Commissioners clearly recognized that this equipment is pollution control property entitled to some measure of positive use determination. What is disappointing is that, rather than endeavor to pursue settlement negotiations or develop a compromise position consistent with spirit of the Commissioners' remand (and the express language of the statute), the ED squandered nearly 18 months to simply rehash their July 2012 position, a position that was rejected by the Commission. This failure to take initiative to resolve this is a disservice to the Applicants, the counties and the state because it perpetuates disparate treatment among similarly situated generators, uncertainty among the counties (which compromises their budgets and planning) and serves to delay future generating projects in Texas because of regulatory uncertainty. Applicants deserved more straightforward and fairer treatment than this. If it was the Commission's intent to punt this issue to the courts, we did not need to wait 18 months to do that. Now that applicants have been forced to wait an additional 18 months (and pay significantly more taxes than their similarly situated competitors with the exact same equipment) and have, in good faith, expended significant resources to reach a compromise in this situation, basic fairness demands that the Commission take up, seriously consider, and render a partial positive use determination based on that compromise.

TEXAS COMMISSION ON ENVIRONMENTAL QUALITY
2014 JUN 30 PM 4:01
CHIEF CLERKS OFFICE

[2] Exhibits 6 and 7. Please note that the Negative Use Determination dated June 5, 2014 was sent to Mr. David Johnson, Tenaska, Inc. in Omaha, Nebraska. After being made aware of the incorrect address, the ED e-mailed new letters to Colorado Bend on June 17, 2014.

[3] Exhibits 1-5.

[4] Exhibit 2.

The legal issue here is simple. As currently applied and reflected in the proposed negative use determination that is before you, the ED's interpretation of its own rules *will always* generate a negative use determination for heat recovery steam generators ("HRSGs") and enhanced steam turbines ("ESTs"). This is patently in violation of Section 11.31 of the Texas Tax Code which unambiguously directs that the Commission "shall determine" that "heat recovery steam generators" and "enhanced steam turbine systems" are "used wholly or partly" as qualifying pollution control property. [5] The ED simply does not believe that Applicant is entitled to a positive use determination. As a result, the Commission needs to decide this issue to avoid perpetuating the disparate treatment of the Applicant and other similar situated taxpayers, a situation that has been going on for almost 7 years.

While technical arguments could be made to support a 100 percent positive use determination, in a spirit of compromise and in hopes of preventing further resources being expended on these matters, Colorado Bend has worked exhaustively with other similarly situated applicants ("Applicants") to develop a legally and technically valid approach that generates a positive use determination far less than 100 percent. Yet, that approach was summarily rejected by the ED in favor of a confined interpretation of the rules that directly contradicts statutory law and, therefore, fundamental principles of Texas administrative law.

So that the Commission and Applicants are not subjected to another 18 month delay in this almost 7-year old matter, Applicant is requesting that the Commission order that a positive use determination is appropriate using the Clarified CAP Model proposed by Applicant. In the alternative, Applicant is requesting that this matter be remanded to the ED for a new determination, and that the Commission specifically instruct the ED to comply with the Legislature's specific instructions in Tex. Tax Code § 11.31 to issue a positive use determination and utilize the tools that have been developed to generate positive use determinations that have a real chance of bringing this dispute to an end and providing the Commission with the tools to deal with future applications.

I. Procedural Background

Between 2008 and 2012, the Executive Director has received approximately thirty-eight applications for HRSGs and associated equipment installed at combined-cycle electric generation facilities. The Executive Director issued 100 percent positive use determinations for twenty-five of the applications representing 70 HRSGs. Six of those applications representing 16 HRSGs were appealed by local taxing units.

On April 22, 2008, the Applicant filed a Tier IV Application for Use Determination for Pollution Control Property with the ED for four Heat Recovery Steam Generator ("HRSGs") to reduce air emissions at the Colorado Bend Energy Center. The Executive Director failed to take any action on this application for over four years. Having sat on their hands for four years and about to run out of time, on July 10, 2012, the ED summarily decided to dispose of the application by issuing a negative use determination for the HRSGs, stating that "[h]eat recovery steam generators and associated dedicated ancillary systems are used solely for production; therefore, are not eligible for a positive use determination" without justification or explanation.

[5] TEX. TAX CODE §§ 11.31(k) and (m).

Applicant appealed the negative used determination and the Commission took up the appeal at its December 5, 2012 Agenda Meeting. After considering the briefs and hearing the arguments, the Commission remanded the matter back to the ED for a new determination. Upon remand, Applicants worked exhaustively to develop a legally and technically supportable approach that generates a positive use determination far less than 100 percent in hopes of arming the Commission with the tools to resolve this dispute, prepare itself for future applications, and avoid further resources being consumed to resolve this matter. Applicants met with the ED executive management and staff to explain the merits of these tools and answer any questions or concerns. Applicants believed progress had been made, but the ED's staff issued an NOD on January 24, 2014 that reflected little progress in the mindset of the ED's staff. Applicant again replied to the NOD, providing additional information to the ED and reiterating the legal and technical merits of the proposed tools being offered. Unfortunately, on June 5, 2014, the ED issued a negative use determination for the application submitted by Colorado Bend, which is the subject of this appeal.

II. The Legislature Specifically Determined that HRSGs and ESTs are Pollution Control Property and Are Entitled to an Exemption from Taxation

Tex. Tax Code § 11.31 begins by stating that "A person is entitled to an exemption from taxation of all or part of real and personal property that the person owns and *that is used wholly or partly as a facility, device, or method for the control of air, water, or land pollution.*"[6] Under this provision, if the property is used for the control of air, water of land pollution, it is eligible to receive a tax exemption.

There can be no question that the Legislature specifically listed HRSGs and ESTs as "facilities, devices, or methods for the control of air, water, or land pollution" under 11.31(k). The term used by the Legislature, "facility, device, or method for the control of air, water, or land pollution" is defined in statute as:

> any structure, building, installation, excavation, machinery, equipment, or device, and any attachment or addition to or reconstruction, replacement, or improvement of that property, that is used, constructed, acquired, or installed wholly or partly to meet or exceed rules or regulations adopted by any environmental protection agency ... *for the prevention, monitoring, control, or reduction of air, water, or land pollution.*[7]

If equipment is considered a facility, device, or method "for the control of air, water, or land pollution" then, by definition, it is used "to meet or exceed rules or regulations adopted by an environmental protection agency for the prevention, monitoring, control, or reduction of air, water, or land pollution." Thus, according to the Legislature's definition, HRSGs and ESTs not only meet or exceed environmental rules, but this equipment is also used to prevent, monitor, control or reduce air pollution.

---

[6] TEX. TAX CODE §11.31(a) (emphasis added).

[7] TEX. TAX CODE §11.31(b) (emphasis added).

The Legislature provided even more clarity in §11.31(m) which states that if an application is for a "facility, device, or method included on the list adopted under Subsection (k)" the ED "shall determine" that the equipment is "used wholly or partly" as qualifying pollution control property. In case the ED was still unsure about whether HRSGs and ESTs could qualify as pollution control property, the author of the bill which included the addition of 11.31(k) wrote a letter to the Commission stating that equipment which had both a production component and a pollution control component, achieved though energy efficiency, qualified as pollution control property.

And if there was still any room for doubt, two separate Texas Attorneys General have opined to the Texas Natural Resource Conservation Commission and the TCEQ that "methods of production," including the use of energy efficient measures such as HRSGs and ESTs, can and do qualify as exempt pollution control property.[8]

In this case, the equipment in question is statutorily defined as a "facility, device, or method for the control of air, water or land pollution," thereby confirming that HRSGs and ESTs are, under the "plain meaning" of Tex. Tax Code §11.31, entitled to some exemption from taxation.

III. Despite the Unambiguous Statutory Language, the ED's Staff's Current Application of its Own Regulations Will Always Generate a Negative Use Determination for HRSGs and ESTs, Which is Patently in Violation of the Texas Tax Code.

Under TCEQ rules, Tier III applicants are required to use the Cost Analysis Procedure ("CAP") to calculate the appropriate use determination. And while Tier IV applicants are not required by TCEQ rules to use the CAP, Applicant proposed a Clarified CAP Model which not only conforms with TCEQ rules, but more importantly, gives effect to the Legislature's intent and arms the Commission with a mechanism to resolve the pending and future applications in a legally and technically supportable manner.

In its negative use determination, the ED argues that, under its CAP, the Capital Cost Old ("CCO") cannot be zero, even though there is no "old" equipment being replaced by a HRSG and EST. This equipment is not replacing other equipment, but is installed as part of the design of this type of facility.

What is interesting about this interpretation is that there is no statutory or regulatory requirement mandating this interpretation, yet this interpretation will always generate a result directly inconsistent with the statute. ED staff have concluded that applicants must assume that the CCO is equal to the cost of a boiler, because boilers, like HRSGs, produce steam. However, the statute does not require the ED to use the CAP, nor does the statute require that the cost of a comparable piece of equipment be used for CCO when there is no equipment being replaced. The requirement that applicants substitute the cost of a boiler as the CCO for HRSG applications is a regulatory fiction used by the ED which will always generate a negative use determination.

This interpretation, which is not required by statute or TCEQ's own rules, will necessarily result in an outcome which directly contradicts the Legislature's unequivocal instruction to treat HRSGs and ESTs as pollution control property in Texas Tax Code §§11.31(k) and (m).

[8] Tex. Att. Gen. Op. JC-0372 (2001); *see* Tex. Att. Gen. Op. GA-0587 (2007).

In a recent case, the Texas Supreme Court considered ambiguous provisions in a statute and applied traditional rules of statutory construction to accomplish the primary objective of ascertaining and giving effect to the legislature's intent. The Court recognized the Comptroller's construction of the tax code was entitled to "serious consideration" and that the Court normally would defer to the agency interpretation, but does not defer when that interpretation is plainly erroneous or inconsistent with the language of the statute.[9] After considering the statute, the Court held the Comptroller's construction to be inconsistent with the statute and reversed lower court decisions upholding the agency construction. Although the agency interpretation apparently was reasonable enough to result in ambiguity, the taxpayer's interpretation was the "better" one because the agency interpretation was inconsistent with the statute, and thus unreasonable.

Section 11.31 must be construed to give effect to the Legislature's intent.[10] An agency or court should first attempt to determine this intent from the actual language used by the Legislature. That is, an agency or court should first look to the plain, ordinary meaning of the statute's words.[11] Most importantly, "[i]f a statute is clear and unambiguous, [the courts] apply its words according to their common meaning without resort to rules of construction or extrinsic aids."[12] This is true even when the agency charged with enforcing the statute seeks to apply a different construction.[13]

These pillars of Texas Administrative Law have been flatly ignored by the ED in this case. As noted above, the ED's interpretation of its rules not only directly contradicts the Legislature's directive as to how to process applications for equipment listed in 11.31(k) of the Tax Code, but also conflicts with its own rules. The ED argues that the CAP analysis requires that it assume the CCO is equivalent to some other piece of production equipment. This ignores the TCEQ's own regulations, which define "Capital Cost Old," as "[t]he cost of the equipment that *is being* or *has been replaced* by the equipment covered in an application."[14] For these HRSG applications, no equipment is being or has been replaced.

In this case, the ED has chosen a boiler, since, like a HRSG, a boiler produces steam. The ED did not derive this conclusion from its rules, but made a unilateral judgment that is not mandated by statute or regulation since a boiler and HRSG are completely distinct pieces of equipment. HRSGs are a heat transfer area, in which waste heat from the combustion turbine is used to create steam. There is no furnace in a HRSG. A fossil fuel-fired boiler combusts fuel, by using a furnace, stoker, or fluidized bed, to generate the heat used to produce steam. The ED has arbitrarily chosen one similarity between HRSGs and boilers (that steam is emitted from them) and used that to rationalize a position that always generates a result that conflicts with express language of a statute. This is the definition of what a regulatory agency cannot do in Texas.

---

[9] *TGS-NOPEC Geophysical Company v. Combs, et al.*, 340 S.W.3d 432 (Tex. 2011).

[10] *See* TEX. GOV'T CODE § 312.005; *Gilbert v. El Paso County Hosp. Dist.*, 38 S.W.3d 85 (Tex. 2001).

[11] *See* TEX. GOV'T CODE § 312.002(a); *Am. Home Prods. Corp. v. Clark*, 38 S.W.3d 92, 95-96 (Tex. 2000); *Crimmins v. Lowry*, 691 S.W.2d 582, 584 (Tex. 1985).

[12] *See In Re Nash*, 220 S.W.3d 914, 917 (Tex. 2007) (emphasis added).

[13] *See Pretzer v. Motor Vehicle Bd.*, 138 S.W.3d 908, 914-15 (Tex. 2004); *Barchus v. State Farm Fire & Cas. Co.*, 167 S.W.3d 575, 578 (Tex. App.—Houston [14th Dist.] 2005, pet denied).

[14] 30 TAC §17.2(2) (emphasis added).

Applicants suggested to the ED that, if CCO could never be zero in their minds, they would be in a much more defensible position if they assumed that the equipment being replaced was a spool piece which directs the exhaust heat to the stack and vents to the atmosphere. In an effort to compromise with the ED's position, Applicants proposed to include the capital cost of a spool piece in the CAP calculation and provided the results to the ED. Rather than consider this or an alternative interpretation of the rules to conform to the above-referenced statutory directive, the ED has instead chosen to narrowly define the CAP calculation in a manner that always results in a negative use determination, which is in direct conflict with §11.31.

It goes without saying that the Commission should avoid interpreting its rules in a manner that will always generate a negative use percentage for equipment that has been legislatively assumed to be, in whole or in party, pollution control property. Beyond this basic premise of Texas Administrative Law, the Commission must recognize that staff's interpretation of the CAP to always result in a negative use determination is tantamount to an ad hoc rulemaking to remove this equipment from eligibility. Such a procedure clearly violates Tax Code §11.31(l), which explicitly requires the Commission to go through formal rulemaking and satisfy a high burden (compelling evidence of no pollution control benefit) before disallowing eligibility for this equipment.

IV. As Currently Applied, the CAP Fails to Comply with Legislative Directive, is Wildly Inconsistent, and Conflicts with the Commission's Stated Goal of Encouraging Pollution Reduction Through Energy Efficiency.

The ED has recognized that the CAP is a flawed system. During the December 5, 2012 Agenda meeting, both ED staff and Chairman Shaw recognized the shortcomings of the CAP. Yet, the ED continues to reject proposals from applicants about how to use the CAP in a way that more accurately reflects the pollution control benefits of HRSGs and ESTs. As an example of how inconsistent the ED has been in evaluating these applications, with regard to Colorado Bend's application, the ED has separately argued for a 100% positive used determination, a 61% partial used determination, a 0% use determination, and a *negative* 276% use determination, for the exact same equipment.

As currently applied, the CAP *cannot* address output based emission limits that govern natural gas combined cycle power plants.[15] Yet, the current application of the CAP fails to recognize reductions in emission from an output based perspective and, thus, is the equivalent to the Commission sticking its head in the sand and hoping that output-based emission controls will pass us by. They will not. In fact, they are likely to be the majority of the pollution control techniques moving forward, especially as the Environmental Protection Agency ("EPA") continues to press for GHG regulation under the Clean Air Act.

[15] See 40 C.F.R. Subpart KKKK; 79 Fed. Reg. 34960 (June 18, 2014) (EPA's proposed Carbon Pollution Standards for Modified and Reconstructed Stationary Sources: Electric Utility Generating Units); and 79 Fed Reg. 34830 (June 18, 2014) (EPA's proposed Carbon Pollution Emission Guidelines for Existing Stationary Sources: Electric Utility Generating Units).

CONCLUSION

The ED's position that HRSGs and ESTs are not eligible for a positive use determination fails to recognize the importance of the statutory definitions provided in Tex. Tax Code §11.31 and does not comply with the controlling statute. Because the Legislature chose to describe HRSGs and ESTs using a statutorily defined term, that definition must be applied and the property must be considered to "meet or exceed rules or regulations adopted by any environmental protection agency . . . for the prevention, monitoring, control, or reduction of air, water, or land pollution." The ED cannot simply choose to ignore this statutory definition. Furthermore, Applicant has provided the ED with more than enough technical support to understand and rely upon the Clarified CAP Model discussed at length above. Applicant trusts that the Commission will make every effort to comply with the clear intent of Tex. Tax Code §11.31 and either order that a positive use determination is appropriate or remand this matter to the ED for a new use determination with specific instructions to revisit the pollution control aspects of the subject property and use the tools Applicants has provided to bring this long-overdue use determination to a close in a way that comports with applicable law.

Respectfully submitted,

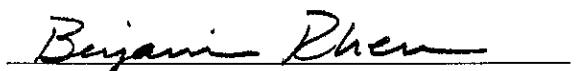

Michael J. Nasi
State Bar No. 00791335
Steve Moore
State Bar No. 14377320
Benjamin Rhem
State Bar No. 24065967

JACKSON WALKER L.L.P.
100 Congress Avenue, Suite 1100
Austin, Texas 78701
512-236-2200
512-236-2002 (Facsimile)
mnasi@jw.com

ATTORNEYS FOR
CER-COLORADO BEND ENERGY, LLC

JACKSON WALKER L.L.P.
ATTORNEYS & COUNSELORS

Michael J. Nasi
(512) 236-2216 (Direct Dial)
(512) 391-2194 (Direct Fax)
mnasi@jw.com

July 31, 2012

TEXAS COMMISSION ON ENVIRONMENTAL QUALITY
2012 JUL 31 PM 4:45
CHIEF CLERKS OFFICE

VIA Hand Delivery

Bridget C. Bohac, Chief Clerk
Texas Commission on Environmental Quality
12100 Park 35 Circle
Building F, 1st Floor
Austin, Texas 78753

RE: CER-Colorado Bend Energy LLC. (formerly known as Navasota Wharton Energy Partners, L.P.) - Appeal of July 10, 2012 Negative Use Determination

Dear Ms. Bohac:

We are in receipt of the Executive Director's letter dated July 10, 2012 notifying the Applicant of a negative use determination (the "***Determination***") on its application #07-11926 (the "***Application***")

I. Procedures For Appeal

Applicant disagrees with the Determination and pursuant to 30 TAC 17.25 hereby provides:

(1) the name, address, and daytime telephone number of the person filing the appeal is:

Mike Nasi
Jackson Walker L.L.P.
100 Congress Ave., Ste. 1100
Austin, Texas 78701
512-236-2216

TEXAS COMMISSION ON ENVIRONMENTAL QUALITY
2012 JUL 31 PM 4:45
CHIEF CLERKS OFFICE

As legal counsel to:
CER-Colorado Bend Energy LLC
Attn: Barbara A. Cherry
Assistant General Counsel
100 Constellation Way, Suite 1700P
Baltimore, MD 21202

(2) the name and address of the entity to which the use determination was issued:

CER-Colorado Bend Energy LLC.[1]
Attn: Barbara A. Cherry
Assistant General Counsel
100 Constellation Way, Suite 1700P
Baltimore, MD 21202

(3) the use determination application number for the Application was:

07-11926

(4) request Commission consideration of the use determination:

Applicant hereby requests the Commission to hear and consider the merits of the Application and reach a determination that a negative use determination is not appropriate and the matter should be remanded back to the Executive Director for a determination that the property in question is eligible for a positive use determination.

(5) The basis for the appeal is set forth in full in the attached brief.

Sincerely,

Benjamin Rau

for Michael J. Nasi, Counsel for
CER-Colorado Bend Energy LLC.

[1] CER-Colorado Bend Energy LLC. was formerly known as Navasota Wharton Energy Partners, L.P. The legal entity and project owner has remained in existence during all relevant time periods, and underwent a ministerial name change by filing an Amendment to Registration with the Texas Secretary of State on July 23, 2010.

TCEQ DOCKET NO. _____

APPEAL OF NEGATIVE USE DETERMINATION ISSUED TO NAVASOTA WHARTON ENERGY PARTNERS LP (UD 07-11926)	§ § § § § § §	TEXAS COMMISSION ON ENVIRONMENTAL QUALITY

APPEAL OF NEGATIVE USE DETERMINATION ISSUED TO CERT-COLORADO BEND ENERGY LLC

CER-Colorado Bend Energy LLC (formerly known as Navasota Wharton Energy Partners LP ("***Applicant***" or "***Colorado Bend***") files this appeal of the negative use determination issued by the Executive Director on July 10, 2012. For the reasons articulated below, the Applicant respectfully requests that the Commission sustain the Applicant's appeal of the negative use determination and remand the matter to the Executive Director for a determination that the property in question is eligible for a positive use determination.

Following a brief summary of argument, Part II of this brief provides a brief background of the Pollution Control Property Program; Part III describes the procedural background of the application and subsequent appeal; Parts IV-VI details the Applicant's argument why the negative use determination is a misapplication of Texas law, is based on policy concerns outside of the Agency's purview, and is founded on a defective technical evaluation, as well as why the General Counsel's remand of the original use determination was not legal under the applicable provisions of the Texas Tax Code.

Summary of Argument

This is an appeal of a negative use determination. Therefore, quite simply, the only question before the Texas Commission on Environmental Quality ("***TCEQ***") in considering this appeal is not whether an exact percentage is appropriate - the Commissioners need only evaluate whether any percentage above zero is appropriate. As set forth fully herein, applicable law, prior precedent, and the record in this case demand that a number above zero be used and a positive use determination be issued. Thus, this appeal should be granted and this matter should be remanded back to the Executive Director for a determination that the property in question is eligible for a positive use determination.

I. Program Background

On November 2, 1993, Texans approved Proposition 2 amending the Texas Constitution to provide tax relief for pollution control property. This amendment added §1-1 to the Texas Constitution, Article VIII, which states:

> (a) The legislature by general law may exempt from ad valorem taxation all or part of real and personal property used, constructed, acquired, or installed wholly or partly to meet or exceed rules or regulations adopted by any environmental protection agency of the United States, this state, or a political subdivision of this state for the prevention, monitoring, control, or reduction of air, water, or land pollution.
>
> (b) This section applies to real and personal property used as a facility, device, or method for the control of air, water, or land pollution that would otherwise be taxable for the first time on or after January 1, 1994.

In response to the constitutional amendment, the Texas Legislature added Texas Tax Code, §11.31, Pollution Control Property (***"§11.31"*** or ***"Section 11.31"***). The statute establishes a process where applicants submit Applications for Use Determination to the Executive Director of the TCEQ to determine whether the property is used wholly or in part for pollution control.[2] The Executive Director's role is limited by §11.31 to the specific task of conducting a technical evaluation to determine whether the equipment is used wholly or partly for the control of air, water, or land pollution,[3] and does not include any evaluation of the merit of the tax exemption itself or tax policy implications of granting positive or negative use determinations.

The tax appraisal district where the Pollution Control Property will be installed/constructed is the entity charged with actually granting the tax exemption. If an applicant obtains a positive use determination from the Executive Director, the applicant must then submit another application with the local appraisal district to receive the tax exemption for the pollution control property.

In 2001, the Legislature passed House Bill 3121, which amended §11.31. These amendments included providing a process for appealing the Executive Director's use determinations.[4] House Bill 3121 also required the Commission to adopt rules that establish

---

[2] TEX. TAX CODE § 11.31(c) and (d).

[3] TEX. TAX CODE § 11.31(c).

[4] TEX. TAX CODE § 11.31(e).

specific standards for the review of applications that ensure determinations are equal and uniform,[5] and to adopt rules to distinguish the proportion of property that is used to control pollution from the proportion that is used to produce goods or services.[6]

In 2007, §11.31 was amended again with the passage of House Bill 3732, which required the Commission to adopt a list of equipment that is considered pollution control property, including the equipment listed in §11.31(k). In adopting rules for the implementation of House Bill 3732, the TCEQ created a Tier IV application for the categories of listed equipment. For Tier IV applications, the Executive Director must determine the proportion of the equipment used for pollution control and the proportion that is used for production. The application that is the subject of this appeal is a Tier IV application.

II. Procedural Background

On March 19, 2008, the Applicant filed a Tier IV Application for Use Determination for Pollution Control Property with the Executive Director for four Heat Recovery Steam Generators ("HRSGs") and two steam turbines (the "Steam Turbines"). (See Attachment A). The Executive Director conducted a technical review of the application and on May 1, 2008 issued a 100 percent positive use determination for the four HRSGs, stating that "[t]his equipment is considered to be pollution control equipment and was installed to meet or exceed federal or state regulations." (See Attachment B). The Executive Director also determined that the two steam turbines were not pollution control property and issued a negative determination for those facilities. Subsequently, on May 19, 2008, Wharton County Appraisal District filed an appeal of the Executive Director's use determination, claiming that the HRSGs "are production equipment in that they burn natural gas to create steam to generate electricity." (See Attachment C).

The Executive Director has received approximately thirty-eight similar applications for HRSGs and steam turbines installed at combined-cycle electric generation facilities. The Executive Director issued 100 percent positive use determinations for twenty-six of the HRSG applications. Of the twenty-six positive use determinations, six were appealed by appraisal districts. In light of the six appealed positive use determinations, the Executive Director held a Workgroup to develop a uniform use determination percentage for HRSGs. As a result of that Workgroup, on December 3, 2008, the Executive Director submitted its Response Brief to the various appraisal district appeals of the Executive Director's positive use determinations, in which it recommended that the Commission lower the positive use determinations for the six appealed HRSG applications from 100 percent to 61 percent. (See Attachment D).

---

[5] TEX. TAX CODE § 11.31(g)(1) and (g)(2).

[6] TEX. TAX CODE § 11.31(g)(3).

The appeal of the Executive Director's positive use determination for the Applicant and the five other similarly situated applicants was scheduled to appear on the Commission's Agenda to be held on February 25, 2009. However, on February 23, 2009, two days prior to the Agenda, the Executive Director filed with the TCEQ's General Counsel a Motion for Continuance to "allow the Executive Director more time to evaluate its current recommendation." (See Attachment E) In response to the Executive Director's motion, the General Counsel chose to continue the matter "indefinitely." (See Attachment F).

On June 18, 2012, almost three and a half years after the Commission indefinitely continued the matter on its Agenda, the Executive Director requested that the General Counsel remand the six appealed used determinations back to the Executive Director for "further processing" (See Attachment G). On June 29, 2012, before the Commission ever made a final determination on the original appeal of the positive use determination, the General Counsel remanded the matter back to the Executive Director.[7] (See Attachment H). In less than two weeks, on July 10, 2012, the Executive Director issued a new use determination, stating that "[h]eat recovery steam generators are used solely for production and, therefore, are not eligible for a positive use determination." (See Attachment J).

III. Procedural Error

Applicant has concurrently filed along with this appeal a Request for Reversal of the June 29, 2012 remand issued by the Texas Commission on Environmental Quality (***"TCEQ"***) General Counsel in TCEQ Docket No. 2008-0851-MIS-U regarding the positive use determination issued by the Executive Director to the Applicant on May 1, 2008. Because the procedural errors complained of in this appeal include the impermissible remand of the prior positive use determination, this appeal adopts all of arguments contained in the Request for Reversal as if they were set forth fully herein.

In 2007, the Texas Legislature passed House Bill 3732, which amended Texas tax Code §11.31. Specifically, House Bill 3732 added subsections (k) and (m). Subsections 11.31(k) and (m) direct that the Commission "shall determine" that "heat recovery steam generators" are "used wholly or partly" as qualifying pollution control property. There is no option under the statute for TCEQ to determine that equipment listed in 11.31(k) is not pollution control equipment. When the Legislature added subsection 11.31(k) in 2007, the purpose was to list equipment that was predetermined to be pollution control equipment and the only evaluation that needed to occur was to determine the percentage of the equipment that qualified as pollution

[7] Applicant has submitted a separate request to reverse the General Counsel's remand of the use determination, which is included as Attachment I. The arguments made by Applicant in the request to reverse the remand are hereby incorporated by reference.

control property. The question is not "whether the equipment is pollution control property", but instead should be "how much is pollution control property."

Furthermore, under Texas Tax Code §11.31(m), the Executive Director "shall" review applications for equipment listed under §11.31(k) and make a determination whether the equipment is wholly or partly pollution control property within 30 days. Furthermore, the statute states that the Executive Director "shall" take action on that determination and notify the applicant and the appraisal district of the determination. Thus, the Executive Director must review and issue a use determination within 30 days for those applications which were submitted after House Bill 3732 became effective, and which include equipment that is listed under Texas tax Code §11.31(k).

As indicated earlier, the Executive Director received Colorado Bend's application on March 19, 2008. Despite the statute's clear requirement that the Executive Director act within 30 days on applications for equipment listed under §11.31(k), in this instance, the Executive Director waited over four years from the time the application was submitted to make a determination. By failing to act within 30 days, the Executive Director violated the statutory requirements of Texas Tax Code §11.31(m) and effectively prevented the Applicant from receiving a tax exemption for which it met all of the statutory requirements.

IV. Texas Tax Code Requires Consistency

a) The Executive Director's Use Determination Violates the Equal and Uniform Tax Mandate in Texas Constitution art. VIII, Section 1(a).

In Texas, all taxation must be equal and uniform.[8] The Texas Constitution's equal and uniform standard is strikingly incorporated into Section 11.31:

> "(d) The commission shall adopt rules to implement this section. Rules adopted under this section must . . . (2) be sufficiently specific ***to ensure that determinations are equal and uniform***. . ."

The constitutional mandate requires that a tax must treat taxpayers within the same class alike, and that any classifications must not be unreasonable, arbitrary, or capricious.[9] The

---

[8] Tex. Const. art. VIII, Section 1(a). The Article VIII, Section 1 of the Texas Constitution provides: "(a) Taxation shall be equal and uniform. (b) All real property and tangible personal property in this State, unless exempt as required or permitted by this Constitution, whether owned by natural persons or corporations, other than municipal, shall be taxed in proportion to its value, which shall be ascertained as may be provided by law."

[9] *Hurt v. Cooper*, 110 S.W.2d 896, 901 (Tex. 1937).

standard for determining equal and uniform taxation is a two-part test: "(1) whether the tax's classification is reasonable; and (2) whether, within the class, the legislation ***operates equally***."[10]

A tax cannot satisfy the second prong of the equal and uniform standard unless the value of the tax base is ascertained by the same standard for all taxpayers within each class.[11] ("The standard of uniformity prescribed by the Constitution being the value of property, taxation can not be in the same proportion to the value of the property, unless the value of all property is ascertained by the same standard."). In other words, when taxing value (i.e., the tax base), the Legislature may not say that the same economic value is more for some taxpayers than it is for other taxpayers.

In the instant case the Commission has granted 100 percent exemption for heat recovery steam generator systems that are substantively identical to Applicant's to approximately 20 other taxpayers. There has been no reasoned justification for the distinction based on any alleged differences in design or use or location of the equipment. The negative use determination made against Applicant is arbitrary in that there is no substantive distinction between the use or pollution reducing benefit of the HRSGS and the Steam Turbines and the multiple other applicants whose systems have been granted 100 percent positive use determinations by the Commission. Such random enforcement causes §11.31 to operate unequally and in direct violation of the equal and uniform tax mandate.

b) The Commission Does Not Have Authority to Make a Negative Use Determination Under Section 11.31 of the Texas Tax Code

Subsections 11.31(k) and (m) direct that the Commission "*shall determine*" that "heat recovery steam generators" and "enhanced steam turbine systems" are "used wholly or partly" as qualifying pollution control property.[12]

The Determination's negative use finding is facially and patently in violation of the Texas Tax Code.

The Application requested a 100 percent positive use determination that the Applicant's four HRSGS and two Steam Turbines were used in accordance with the following statutory standard set forth in Section 11.31[13] of the Texas Tax Code:

---

[10] *R.R. Comm 'n of Tex. v. Channel Indus. Gas*, 775 S.W.2d 503, 507 (Tex. App.—Austin 1989, writ denied) (*emphasis added*).

[11] *Lively v. Missouri, K. & T. Ry.*, 120 S.W. 852, 856 (Tex. 1909).

[12] Tex. Tax Code Section 11.31(k) & (m).

> "A person is entitled to an exemption from taxation of all or part of real and personal property that the person owns and that is used ***wholly or partly as a facility, device, or method for the control of air, water, or land pollution.***"
>
> In this section, "facility, device, or method for the control of air, water, or land pollution" means land that is acquired after January 1, 1994, or any structure, building, installation, excavation, machinery, equipment, or device, and any attachment or addition to or reconstruction, replacement, or improvement of that property, that is used, constructed, acquired, or installed ***wholly or partly to meet or exceed rules or regulations adopted by any environmental protection agency of the United States, this state, or a political subdivision of this state for the prevention, monitoring, control, or reduction of air, water, or land pollution.***"

The Application and Attachment K attached hereto establish the factual basis that the HRSGS and the Steam Turbines qualify as a ***device, or method for the control of pollution.***

Despite the clear factual record that the HRSGS and Steam Turbines control pollution, the Determination summarily finds, without explanation or substantive reasoning, that the HRSGS and Steam Turbines will be subject to a negative use determination because they are "used solely for production." The facts do not support the Determination, and there is no reasonable interpretation of Section 11.31 that would support the Determination.

---

[13] Section 11.31 of the Texas Tax Code is authorized by Article VIII, Section I-1 of the Texas Constitution, which provides: "(a) The legislature by general law may exempt from ad valorem taxation all or part of real and personal property used, constructed, acquired, or installed wholly or partly to meet or exceed rules or regulations adopted by any environmental protection agency of the United States, this state, or a political subdivision of this state for the prevention, monitoring, control, or reduction of air, water, or land pollution. (b) This section applies to real and personal property used as a facility, device, or method for the control of air, water, or land pollution that would otherwise be taxable for the first time on or after January 1, 1994. . . . (Added Nov. 2, 1993.)"

Section 11.31 must be construed to give effect to the Legislature's intent.[14] An agency or court should first attempt to determine this intent from the actual language used by the Legislature. That is, an agency or court should first look to the plain, ordinary meaning of the statute's words.[15] Most importantly, "[i]f a statute is clear and unambiguous, [the courts] apply its words according to their common meaning without resort to rules of construction or extrinsic aids."[16] This is true even when the agency charged with enforcing the statute seeks to apply a different construction.[17]

Further, Texas Attorney General Opinion JC-0372 (2001) has expressly opined to the Chair of the Texas Natural Resource Conservation Commission that "methods of production" can and do qualify as exempt pollution control property:

> "Section 11.31 is ***broadly written, and we believe its plain meaning is clear.*** It embraces any property, real or personal, "that is used wholly or partly as a facility, device, or method for the control of air, water or land pollution. . . ." (*emphasis added*).
>
> "Next, we consider whether section 11.31 excludes from its scope pollution-reducing ***production*** equipment. Significantly, the statute applies to property used "wholly or partly" for pollution control. See id. § 11.31(a). To qualify for the exemption, property must be used "wholly or partly" to meet or exceed environmental rules. See id. § 11.31(b). The term "wholly" clearly refers to property that is used only for pollution control, such as an add-on device. See Merriam Webster's Collegiate Dictionary 1351 (10th ed. 1993) (defining "wholly" to mean "to the full or entire extent: ... to the exclusion of other things"). ***The term "partly," however, embraces property that has only some pollution-control use.*** See id. at 848 (defining "partly" to mean "in some measure or degree"). This broad formulation clearly embraces more than just add-on devices. ***Furthermore, that statute clearly embraces not only "facilities" and "devices" but also "methods" that prevent, monitor, control, or reduce pollution. "Methods" is an extremely broad term that clearly embraces means of production designed, at least in part,***

[14] *See* TEX. GOV'T CODE § 312.005; *Gilbert v. El Paso County Hosp. Dist.*, 38 S.W.3d 85 (Tex. 2001).

[15] *See* TEX. GOV'T CODE § 312.002(a); *Am. Home Prods. Corp. v. Clark*, 38 S.W.3d 92, 95-96 (Tex. 2000); *Crimmins v. Lowry*, 691 S.W.2d 582, 584 (Tex. 1985).

[16] *See In Re Nash*, 220 S.W.3d 914, 917 (Tex. 2007) (emphasis added).

[17] *See Pretzer v. Motor Vehicle Bd.*, 138 S.W.3d 908, 914-15 (Tex. 2004); *Barchus v. State Farm Fire & Cas. Co.*, 167 S.W.3d 575, 578 (Tex. App.—Houston [14th Dist.] 2005, pet denied).

to reduce pollution. See id. at 732 (defining "method" to include "a way, technique, or process of or for doing something").

The HRSGS and Steam Turbines are clearly used to comply with environmental laws and to control pollution and qualify for exemption under any valid rule or convention of statutory construction.

c) Failure To Comply With Commission Rules and the Texas Administrative Procedures Act.

The Commission cannot arbitrarily and capriciously create and enforce a new internally derived formula for heat recovery steam generators resulting in a drastic increase in the amount of property taxes assessed against Applicant, without, at the very least,[18] adhering to the Texas Administrative Procedure Act (the "APA").

In brief, the APA requires state agencies to follow certain formal procedures before adopting and applying any "rule."[19] Among other requirements, the APA requires state agencies to provide notice of any intent to promulgate a new rule, to publish the contemplated new rule, and to invite public comment with respect to the new rule.[20] As the Texas Supreme Court explained: "In this way, the APA assures that the public and affected persons are heard on matters that affect them and receive notice of new rules."[21]

In addition to the APA requirements regarding the procedures that must be applied by state agencies when adopting and applying any "rule," Texas courts frequently require that an agency explain its reasoning when it "appears to the reviewing court that an agency has departed from its earlier administrative policy or there exists an apparent inconsistency in agency determinations." By issuing a 100 percent use determination and ultimately issuing a negative use determination, the TCEQ Executive Director's staff has departed from its earlier policy with regard to the evaluation of HRSGs. Furthermore, as explained earlier, TCEQ has issued 100 percent use determinations for other HRSGs, but issued negative use determinations for those applications that were appealed. In doing so, the TCEQ provided a one sentence explanation

---

[18] And subject to the statutory arguments set forth below.

[19] The APA defines the term "rule" to mean "a state agency statement of general applicability that... implements, interprets, or prescribes law or policy." Tex. Gov't Code § 2001.003(6).

[20] *See Rodriguez v. Service Lloyds Ins. Co.*, 997 S.W.2d 248, 255 (Tex. 1999), *reh'g of cause overruled* (Sept. 9, 1999); *see also* Tex. Gov't Code § 2001.004(2) (additionally requiring agencies to "index, cross-index to statute, and make available for public inspection all rules and other written statements of policy or interpretations that are prepared, adopted, or used by the agency in discharging its functions").

[21] *Id.*

stating, "[HRSGs] are used solely for production and, therefore, are not eligible for a positive use determination."

In this case the Commission clearly failed to follow the procedures of the Texas APA in reaching and applying its interpretation of Section 11.31(k) and (m) of the Texas Tax Code. Because the Commission failed to promulgate any rule or other formal statement expressing its new interpretation of Section 11.31(k) and (m) of the Texas Tax Code, its interpretation violates the APA and must be disregarded.

Further, the Determination appears to represent a sea change in the Commission's interpretation of Section 11.31 without any change to its Section 11.31 rules. The Commission's attempt to make a material change in policy retroactively without compliance with the APA is an invalid rule under the APA under the analysis in *El Paso Hospital District v. Texas Health and Human Services Commission*, 247 S.W.3d 709 (Tex. 2008).[22]

In *El Paso Hospital District*, the Texas Health and Human Services Commission ("HHSC") adopted a regulation that established a "base year" for gathering claims data to be used in setting certain Medicaid hospital payment rates. Several hospitals sought a declaratory judgment that the cutoff rule was invalid under the APA, because HHSC did not adopt the rule in accordance with the APA. HHSC argued that the cutoff date was not a rule itself but rather an interpretation of a rule. The Texas Supreme Court held that the agency-applied cutoff date was an invalid rule because the agency did not follow the proper rule-making procedures contained in the APA. The Texas Supreme Court stated:

> "HHSC argues that it complied with these statutes, and that the February 28 cutoff is not a rule itself, but rather its interpretation of the base-year rule. The Hospitals disagree, arguing the February 28 cutoff falls squarely within the APA's definition of a rule. We agree with the Hospitals. Under the APA, a rule: (1) is an agency statement of general applicability that either "implements, interprets, or prescribes law or policy" or describes [HHSC'S] "procedure or practice requirements;" (2) "includes the amendment or repeal of a prior rule;" and (3) "does not include a statement regarding only the internal management or organization of a state agency and not affecting private rights or procedures." TEX. GOV'T CODE §2001.003(6)(A)-(C). *El Paso Hospital District* at 714.

[22] *El Paso Hospital District v. Texas Health and Human Services Commission*, 247 S.W.3d 709 (Tex. 2008).

The Commission's new internal formula or reasoning that resulted in the Determination interprets or prescribes law or policy and amends or repeals positions previously applied by the Commission.

The violation of APA requirements is especially egregious in this case given that Section 11.31(l) of the Texas Tax code mandates that the TCEQ, "by rule shall update the list adopted under Subsection (k)" and then makes clear that "[a]n item may be removed from the list if the commission finds compelling evidence to support the conclusion that the time does not provide pollution control benefits." No APA rulemaking procedure has been followed to remove HRSGS or enhanced steam turbine systems from Section 11.31(k) and it is inconceivable how the TCEQ could find that "compelling evidence exists to support the conclusion that [HRSGs] do not provide pollution control benefits."

V. The Record Supports a Positive Use Determination and Clearly Contradicts a Negative Use Determination

a) Pollution Control Property

The Facility's HRSGs can be defined as pollution control property based on the prevention of NOx emissions from natural gas use efficiencies. In fact, the Executive Director already did so. The Executive Director conducted a technical review of the application and on May 1, 2008 issued a 100 percent positive use determination for the four HRSGs, stating that "[t]his equipment is considered to be pollution control equipment and was installed to meet or exceed federal or state regulations." However, the Executive Director has since reversed course, which is the subject of this appeal.

Under Tax Code §11.31(a), "[a] person is entitled to an exemption from taxation of all or part of real and personal property that the person owns and that is used wholly or partly as a **facility**, device, **or method** for the control of air, water, or land pollution." (emphasis added). The statute defines "a facility, device, or method for the control of air, water, or land pollution" as:

> "[a] structure, building, installation excavation, machinery, equipment or device, and any attachment or addition to or reconstruction, replacement or improvement of that property, that is used, constructed, acquired, or installed wholly or partly to meet or exceed rules or regulations adopted by any environmental protection agency of the United States, this state, or a political subdivision of this state for the prevention, monitoring, control, or reduction of air, water, or land pollution."

Thus to qualify as pollution control property, the equipment or structure must control pollution and must meet or exceed applicable environmental protection regulations.

b) Method of Pollution Control

The use of otherwise wasted heat in the turbine exhaust gas within the HRSG results in higher plant thermal efficiency (net power output of the plant divided by the heating value of the fuel), compared to other power generation technologies. A plant incorporating a combined cycle design emits less NO_x per pound of fossil fuel combusted due to the incorporation of both the Brayton and Rankine Thermodynamic cycles within plant design operations

Specifically, the equipment's increased thermal efficiency, as compared to a traditional steam boiler unit, reduces the fuel needs for the same power outputs, while emitting no additional air emissions. It is important to note that the lower fuel consumption associated with increased fuel conversion efficiency not only reduces NOx emissions, but also reduces emissions of hazardous air pollutants and greenhouse gas emissions such as CO_2.

c) HRSGs are Used to Meet Certain New Source Performance Standards for Electric Generating Facilities

As cited in the Application, Title 40 of the Code of Federal Regulations ("CFR") subpart 60.44Da establishes New Source Performance Standards ("NSPS") for emissions of air contaminants for electric utility steam generating facilities.

Subpart §60.40Da(e)(1) specifically lists HRSGs as subject to the NSPS requirements in 60.44Da, stating:

> (i.e. heat recovery steam generators used with duct burners) associated with a stationary combustion turbine that are capable of combusting more that 73 MW (250MMBtu/H) heat input of fossil fuel are subject to this subpart except in cases when the affected facility (i.e. heat recovery steam generator) meets the applicability requirements of and is subject to subpart KKKK of this part..

Therefore, Applicant's four HRSGs are subject to the performance standards for air emissions as established within the Subpart Da. Specifically, they are subject to Section 60.44Da Standards for nitrogen oxides which states:

> Except as provided in paragraph (h) of this section, on and after the date on which the initial performance test is completed or required to be completed...no owner or operator subject to the provisions of

> this subpart shall cause to be discharged into the atmosphere from any affected facility for which construction...commenced before July 10, 1997 any gases that contain NO_x (expressed as NO2) in excess of the applicable emissions limit in paragraphs (a)(1) and (2) of this section.

Furthermore, the Applicant's HRSGs were designed to meet the national primary and secondary ambient air quality standards ("NAAQS") for oxides of nitrogen (with nitrogen dioxide as the indicator) as set forth in 40 CFR §50.11.

d) Evaluation of Output Based Emissions is An Appropriate Measure of Pollution Control

A 100 percent exemption position presented under the Thermal Efficiency/Output Based Emissions argument, which calculates a measure of air emissions avoidance, and applies this measure against capital costs to establish a percentage exemption for the HRSGs, is the most appropriate way to characterize the pollution prevention function of the Applicant's HRSGs.

In an Output-based NO_x allocation method the baseline or comparison plant used in the Output Based Model is a conventional, gas fired boiler. It was chosen for fuel type application and heat rate considerations. Both the U.S. Environmental Protection Agency ("EPA") and other states recognize the use of energy efficiency as a measure of pollution control and/or pollution prevention with some states using this method as part of their tax exemption programs.

Monitoring data from the Barney Davis Power Plant during both pre and post-repowering of that plant confirm the assumptions regarding the air emissions reductions per pound of fossil fuel use. This data is set out in Attachment K.

VI. TCEQ's Role as a Technical Advisor to the State in Administering the Prop 2 Program Includes Factoring in Ever-Evolving Pollution Control Policies, not Tax Policy

The clear structure and purpose of Section 11.31 of the Texas Tax Code has for nearly two decades been for the TCEQ to serve as the scientific and technical arbiter for determining the types of equipment that qualify as pollution control property. The TCEQ's role has always been to implement an efficient, consistent and scientifically accurate process to determine technologies that meet the statutory definition of pollution control property. Section 11.31 directs the TCEQ to determine whether particular items of property are used for pollution control based on its specialized knowledge and expertise.

Section 11.31 creates clear and separate roles for: (i) the TCEQ, as the technical expert on pollution control property; and (ii) the appraisal districts whose job it is to value property.

The TCEQ's role does not involve local tax administration or local budgetary issues. The specter of prejudice to a local tax base by appraisal districts based on the unfounded argument that HRSGs and Steam Turbines are production equipment is a thinly veiled argument that is outside of the TCEQ's role, and that potentially leads to double taxation of the residual, non-pollution control portion, of the plant, which is routinely valued, at least in part, on an income basis.[23]

The Commission's role is not to evaluate the tax policy and budget impacts of tax exemption decisions. Now that output-based emission limits are the law of the Land, whether talking about conventional pollutants such as NOx, or newly-implemented rules regarding Greenhouse Gases ("GHGs"), the Commission's technical evaluations must evolve along with those standards.

Gone are the days when the Commission need only confirm the pollution control characteristics of bolt-on pollution control devices. The Commission now has the much more complicated job of developing a consistent approach for calculating the pollution control aspects of "devices and methods" that also have productive value. The pending HRSGs appeals are an early indicator of that evolving role.

Whether or not the Commission chooses to stay with its initial approach of granting 100% exemptions to HRSGs, it must develop a consistent methodology that embraces the reality that HRSGs and similar technologies are, in many instances, the only (or at least most sensible) way for fossil fuel-fired power generation to be built in compliance with new output-based emission limits.

Conclusion

As noted at the outset of this brief, the question before the Commission in considering this appeal is not whether an exact percentage is appropriate - the Commissioners need only evaluate whether any percentage above zero is appropriate. As set forth fully above, applicable law, prior precedent, and the record in this case demand that a positive use determination be issued. Thus, this appeal should be granted and this matter should be remanded back to the Executive Director for a determination that the property in question is eligible for a positive use determination.

[23] *See* e.g., Tex. Tax Code Section 23.0101.

Respectfully submitted,

Michael J. Nasi
State Bar No. 00791335
Steve Moore
State Bar No. 14377320
Benjamin Rhem
State Bar No. 24065967

JACKSON WALKER L.L.P.
100 Congress Avenue, Suite 1100
Austin, Texas 78701
512-236-2200
512-236-2002 (Facsimile)
mnasi@jw.com

ATTORNEYS FOR
CER-COLORADO BEND ENERGY LLC

CERTIFICATE OF SERVICE

I hereby certify that on the 31st day of July, 2012, a copy of the foregoing was provided by electronic mail or U.S. First Class Mail to the attached mailing list:

for Michael J. Nasi

Mailing List

Daniel Long — *Courtesy Copy via U.S. Mail*
Texas Environmental Law Division MC 173
P. O. Box 13087
Austin, Texas 78711-3087
512/239-0600 FAX 512/239-0606

Susana M. Hildebrand, P.E. — *Courtesy Copy via U.S. Mail*
TCEQ Chief Engineer's Office MC 168
P. O. Box 13087
Austin, Texas 78711-3087
512/239-4900 FAX 512/239-6188

Chance Goodin — *Courtesy Copy via U.S. Mail*
TCEQ Chief Engineer's Office MC 206
P. O. Box 13087
Austin, Texas 78711-3087
512/239-6336 FAX 512/239-6188

Robert Martinez — *Courtesy Copy via U.S. Mail*
TCEQ Environmental Law Division MC 173
P. O. Box 13087
Austin, Texas 78711-3087
512/239-0600 FAX 512/239-0606

Blas Coy — *Courtesy Copy via U.S. Mail*
TCEQ Office of Public Interest Counsel
MC 103
P. O. Box 13087
Austin, Texas 78711-3087

Attachment A

TEXAS COMMISSION ON ENVIRONMENTAL QUALITY
APPLICATION FOR USE DETERMINATION
FOR POLLUTION CONTROL PROPERTY

The TCEQ has the responsibility to determine whether a property is a pollution control property. A person seeking a use determination for pollution control property must complete the attached application or use a copy or similar reproduction. For assistance in completing this form refer to the TCEQ guidelines document, *Property Tax Exemptions for Pollution Control Property*, as well as 30 TAC §17, rules governing this program. For additional assistance please contact the Tax Relief for Pollution Control Property Program at (512) 239-3100. The application should be completed and mailed, along with a complete copy and appropriate fee, to: TCEQ MC-214, Cashiers Office, P.O. Box 13088, Austin, Texas 78711-3088.

1. GENERAL INFORMATION

A. What is the type of ownership of this facility?

- ☐ Corporation
- ☐ Sole Proprietor
- ☐ Partnership
- ☐ Utility
- ☑ Limited Partnership
- ☐ Other

B. Size of company: Number of Employees

- ☑ 1 to 99
- ☐ 1,000 to 1,999
- ☐ 100 to 499
- ☐ 2,000 to 4,999
- ☐ 500 to 999
- ☐ 5,000 or more

C. Business Description: **Electricity Manufacturing (SIC 4911)**

2. TYPE OF APPLICATION

- ☐ **Tier I $150 Application Fee**
- ☐ **Tier II $1,000 Application Fee**
- ☐ **Tier III $2,500 Application Fee**
- ☑ **Tier IV $500 Application Fee**

NOTE: Enclose a check, money order to the TCEQ, or a copy of the ePay receipt along with the applicaton to cover the required fee.

3. NAME OF APPLICANT

A. Company Name: Navasota Wharton Energy Partners LP

B. Mailing Address (Street or P.O. Box): 403 Corporate Woods

C. City, State, ZIP: Magnolia, TX 77354

4. PHYSICAL LOCATION OF PROPERTY REQUESTING A TAX EXEMPTION

A. Name of facility: Colorado Bend

B. Type of Mfg Process or Service: Electricity Manufacturing (SIC 4911)

C. Street Address: 3821 S. State Hwy 60

D. City, State, ZIP: Wharton, TX 77488

E. Tracking Number Assigned by Applicant: DPCOBend B

F. Customer Number or Regulated Entity Number: N/A

5. APPRAISAL DISTRICT WITH TAXING AUTHORITY OVER PROPERTY

A. Name of Appraisal District: Wharton

B. Appraisal District Account Number: 10258-000-000-00; 10-20500000-0200-67099; 20063-000-055-00

Replacement
~~07-12209~~ 07-11926

6. CONTACT NAME (must be provided)

A. Company/Organization Name:	Duff and Phelps LLC	
B. Name of Individual to Contact:	Greg Maxim	
C. Mailing Address:	919 Congress Ave.	Suite 1450
D. City, State, ZIP:	Austin, TX 78701	
E. Telephone number and fax number:	(512) 671-5580	Fax (512) 671-5501
F. E-Mail address (if available):	gregory.maxim@duffandphelps.com	

7. RELEVANT RULE, REGULATION, OR STATUTORY PROVISION

Please reference Section 8. Each item is detailed with the proper statute, regulation, or environmental regulatory provision.

8. DESCRIPTION OF PROPERTY

Background

The Colorado Bend Energy Center (the "Facility"), owned by Navasota Wharton Energy Partners LP, is a combined cycle natural-gas fired power plant located in Wharton, Wharton County, Texas. The Facility is intended to have a total capacity of 825 Mw, built in three phases. Phase has a capacity of 275 Mw and was completed in June of 2007. Phase 2, currently under construction, is to be completed in June of 2008 and will also have a 275 Mw capacity. Each phase consists of 2 GE 7-EA combustion turbine units utilizing the GE Dry Low NOx combustion control system technology, 2 heat recovery steam generating (HRSG) units, and one steam turbine unit. The Facility utilizes a cooling tower within the circulating water system for condenser cooling water needs and condensate return purposes.

Overview of Combined Cycle Technology

The Facility consists of a combined-cycle gas turbine power plant with gas Combustion Turbines ("CTs") equipped with heat recovery steam generators to capture heat from the gas turbine exhaust. Steam produced in the heat recovery steam generators powers a steam turbine generator(s) to produce additional electric power. Use of the otherwise wasted heat in the turbine exhaust gas results in higher plant thermal efficiency compared to other combustion technologies. Combined-cycle plants currently entering service can convert approximately 50% of the chemical energy of natural gas into electricity (HHV basis).

The Rankine cycle is a thermodynamic cycle that converts heat from an external source into work. In a Rankine cycle, external heat from an outside source is provided to a fluid in a closed-loop system. This fluid, once pressurized, converts the heat into work output using a turbine. The fluid most often used in a Rankine cycle is water (steam) due to its favorable properties, such as nontoxic and unreactive chemistry, abundance, and low cost, as well as its thermodynamic properties. The thermal efficiency of a Rankine cycle is usually limited by the working fluid. Without pressure reaching super critical the temperature range the

Rankine cycle can operate over is quite small, turbine entry temperatures are typically 565°C (the creep limit of stainless steel) and condenser temperatures are around 30°C. This gives a theoretical Carnot efficiency of around 63% compared with an actual efficiency of 42% for a modern coal-fired power station. This low turbine entry temperature (compared with a gas turbine) is why the Rankine cycle is often used as a bottoming cycle in combined cycle gas turbine power stations.

The Brayton cycle is a constant pressure thermodynamic cycle that converts heat from combustion into work. A Brayton engine, as it applies to a gas turbine system, will consist of a fuel or gas compressor, combustion chamber, and an expansion turbine. Air is drawn into the compressor, mixed with the fuel, and ignited. The resulting work output is captured through a pump, cylinder, or turbine. A Brayton engine forms half of a combined cycle system, which combines with a Rankine engine to further increase overall efficiency. Cogeneration systems typically make use of the waste heat from Brayton engines, typically for hot water production or space heating.

By combining both gas and steam cycles, high input temperatures and low output temperatures can be achieved. The efficiency of the cycles are additive, because they are powered by the same fuel source. A combined-cycle plant has a thermodynamic cycle that operates between the gas turbine's high firing temperature and the waste heat temperature from the condensers of the steam cycle. This large range means that the Carnot efficiency of the cycle is high. The actual efficiency, while lower than this is still higher than that of either plant on its own. The thermal efficiency of a combined-cycle power plant is the net power output of the plant divided by the heating value of the fuel. If the plant produces only electricity, efficiencies of up to 59% can be achieved.

A single-train combined-cycle plant consists of one gas turbine generator, a heat recovery steam generator (HSRG) and a steam turbine generator ("1 x 1" configuration). As an example, an "FA-class" combustion turbine, the most common technology in use for large combined-cycle plants within the state of Texas and other locations throughout the United States, represents a plant with approximately 270 megawatts of capacity.

See Figure 1 – Standard Combined-Cycle Configuration, below.

It is common to find combined-cycle plants using two or even three gas turbine generators and heat recovery steam generators feeding a single, proportionally larger steam turbine generator. Larger plant sizes result in economies of scale for construction and operation, and designs using multiple combustion turbines provide improved part-load efficiency. A 2 x 1 configuration using FA-class technology will produce about 540 megawatts of capacity at International Organization for Standardization ("ISO") conditions. ISO references ambient conditions at 14.7 psia, 59 F, and 60% relative humidity.

Because of high thermal efficiency, high reliability, and low air emissions,

combined-cycle gas turbines have been the new resource of choice for bulk power generation for well over a decade. Other attractive features include significant operational flexibility, the availability of relatively inexpensive power augmentation for peak period operation and relatively low carbon dioxide production.

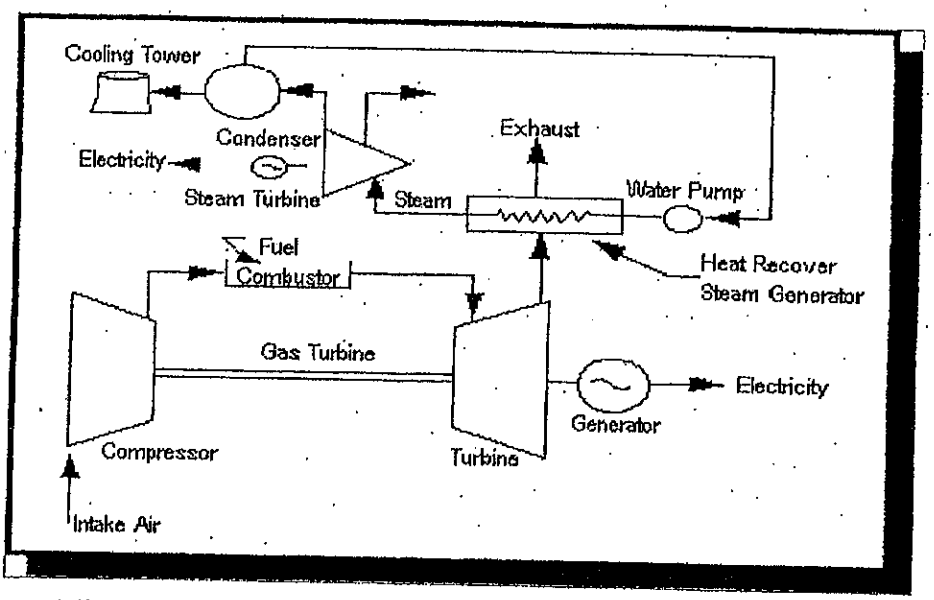

FIGURE 1 - Standard Combined-Cycle Configuration (1)

As an example, consider a gas turbine cycle that has an efficiency of 40%, which is a representative value for current Brayton Cycle gas turbines, and the Rankine Cycle has an efficiency of 30%. The combined-cycle efficiency would be 58%, which is a very large increase over either of the two simple cycles. Some representative efficiencies and power outputs for different cycles are shown in Figure 2 – Comparison of Efficiency and Power Output of Various Power Products, below.

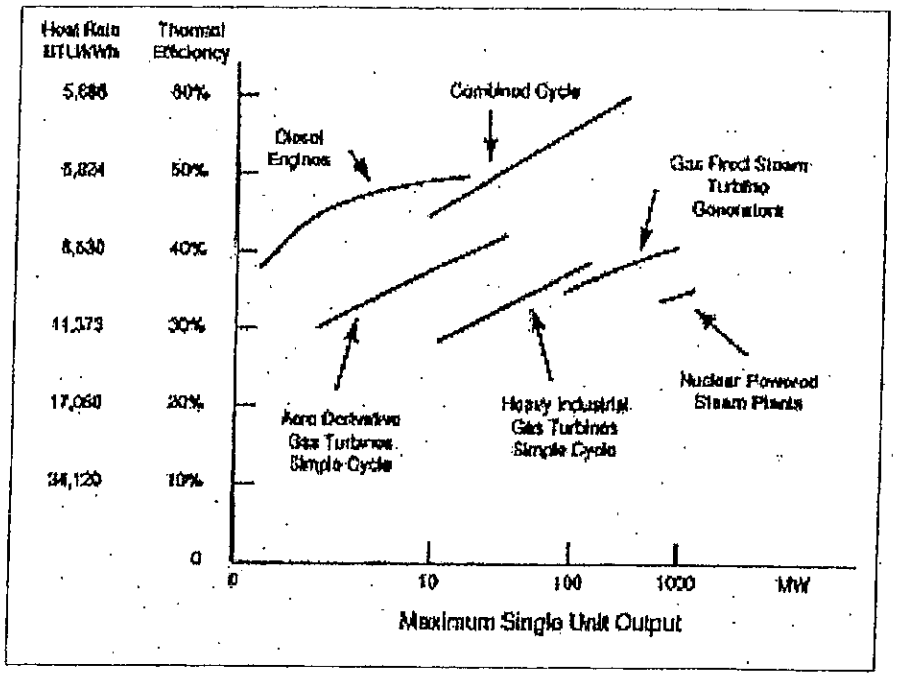

FIGURE 2 - Comparison of efficiency and power output of various power products [Bartol (1997)] (2)

Current Regulatory Authority for Output-Based Emissions

Innovative power technologies such as combined-cycle technology offer enormous potential to improve efficiency and enhance the environmental footprint of power generation through the reduction and/or prevention of air emissions to the environment. Currently, two thirds of the fuel burned to generate electricity in traditional fossil-fired steam boilers is lost. Traditional U.S. power generation facility efficiencies have not increased since the 1950s and more than one fifth of the U.S. power plants are more than 50 years old. In addition, these facilities are the leading contributors to U.S. emissions of carbon dioxide, NOx, sulfur dioxide ("SO2"), and other contaminants into the air and water.

The ability to recognize and regulate the efficiency benefits of pollution reduction and/or prevention through the use of combined-cycle technology is achieved through the use of Output-Based emissions standards, incorporated since September 1998 within the U.S. EPA's new source performance standards ("NSPS") for NOx, from both new utility boilers and new industrial boilers. Pursuant to section 407(c) of the Clean Air Act in subpart Da (Electric Utility Steam Generating Units) and subpart Db (Industrial-Commercial-Institutional Steam Generating Units) of 40 CFR part 60, the U.S. EPA revised the NOx emissions limits for steam generating units for which construction, modification, or reconstruction commenced after July 9, 1997 (3). Output-Based regulations are also exemplified by those used in the U.S. EPA's NOx Cap and Trade Program for the NOx State Implementation Plan ("SIP") Call

of 1998, which uses units of measure such as lb/MWh generated or lb concentration ("ppm"), which relate to the emissions to the productive output – electrical generation of the process.(4)

The use of innovative technologies such as combined-cycle units reduces fossil fuel use and leads to multi-media reductions in the environmental impacts of the production, processing transportation, and combustion of fossil fuels. In addition, reducing fossil fuel combustion is a pollution prevention measure that reduces emissions of all products of combustion, not just the target pollutant (currently NOx) of a federal regulatory program.

Authority to Expand Pollution Control Equipment & Categories in Texas

Under Texas House Bill 3732 ("HB3732") enacted in 2007, Section 11.31 of the Texas Tax Code is amended to add certain plant equipment and systems to the current list of air, water, or land pollution control devices exempt from property taxation in Texas.

Specifically, the language reads as follows:

SECTION 4. Section 11.31, Tax Code, is amended by adding Subsections (k), (l), and (m) to read as follows:

(k) The Texas Commission on Environmental Quality shall adopt rules establishing a nonexclusive list of facilities, devices, or methods for the control of air, water, or land pollution, which must include:

(1) coal cleaning or refining facilities;

(2) atmospheric or pressurized and bubbling or circulating fluidized bed combustion systems and gasification fluidized bed combustion combined-cycle systems;

(3) ultra-supercritical pulverized coal boilers;

(4) flue gas recirculation components;

(5) syngas purification systems and gas-cleanup units;

(6) enhanced heat recovery systems;

(7) exhaust heat recovery boilers;

(8) heat recovery steam generators;

(9) superheaters and evaporators;

(10) enhanced steam turbine systems;

(11) methanation;

(12) coal combustion or gasification byproduct and coproduct handling, storage, or treatment facilities;

(13) biomass cofiring storage, distribution, and firing systems;

(14) coal cleaning or drying processes, such as coal drying/moisture reduction, air jigging, precombustion decarbonization, and coal flow balancing technology;

(15) oxy-fuel combustion technology, amine or chilled ammonia scrubbing, fuel or emission conversion through the use of catalysts, enhanced scrubbing technology, modified combustion technology such as chemical looping, and cryogenic technology;

(16) if the United States Environmental Protection Agency adopts a final rule or regulation regulating carbon dioxide as a pollutant, property that is used, constructed, acquired, or installed wholly or partly to capture carbon dioxide from an anthropogenic source in this state that is geologically sequestered in this state;

(17) fuel cells generating electricity using hydrogen derived from coal, biomass, petroleum coke, or solid waste; and

(18) any other equipment designed to prevent, capture, abate, or monitor nitrogen oxides, volatile organic compounds, particulate matter, mercury, carbon monoxide, or any criteria pollutant.

(l) The Texas Commission on Environmental Quality by rule shall update the list adopted under Subsection (k) at least once every three years. An item may be removed from the list if the commission finds compelling evidence to support the conclusion that the item does not provide pollution control benefits.

(m) Notwithstanding the other provisions of this section, if the facility, device, or method for the

control of air, water, or land pollution described in an application for an exemption under this section is a facility, device, or method included on the list adopted under Subsection (k), the executive director of the Texas Commission on Environmental Quality, not later than the 30th day after the date of receipt of the information required by Subsections (c)(2) and (3) and without regard to whether the information required by Subsection (c)(1) has been submitted, shall determine that the facility, device, or method described in the application is used wholly or partly as a facility, device, or method for the control of air, water, or land pollution and shall take the actions that are required by Subsection (d) in the event such a determination is made.

Under the TCEQ's recently updated "Tax Relief for Pollution Control Property – Application Instructions and Equipment and Categories List – Effective January 2008", the Equipment and Categories List - Part B ("ECL Part B") is a list of the pollution control property categories adopted and set forth in TTC Sec. 26.045(f). The taxpayer is to supply a pollution control percentage for the equipment listed in Part B via calculations demonstrating pollution control, prevention and/or reductions achieved by the listed equipment or systems.

The following property descriptions outline the environmental purpose, including the anticipated environmental benefit of pollution control additions considered under the Application Instructions' ECL Part B that have been constructed and placed into use at the Facility as of its placed-in-service date, or installed subsequent to in-service since 1994:

Property Descriptions

Item #1 & 3 Combined-Cycle Gas Turbine Plant Heat Recovery Steam Generator ("HRSG") and Support Systems Tier IV B-8

40 CFR Part 60 Subparts DA and DB, NOx Limits for Electric Utility Steam Generating Units and Industrial-Commercial-Institutional Steam Generating Units for New Source Performance Standards ("NSPS").

TAC Rule 106.512, Standard Permit for Electric Generating Units (EGU)

NOTE: Permits issued under Texas Clean Air Act's Health & Safety Code Sections 382.011, applies to all electric generating units that emit air contaminants, regardless of size, and it is to reflect Best Available Control Technology ("BACT") for electric generating units on an output basis in pounds of NOx per megawatt hour, adjusted to reflect a simple cycle power plant.

The heat recovery steam generator ("HRSG") found in the Facility is a heat exchanger that recovers heat from a hot gas stream. It produces steam that can be used in a process or used to drive a steam turbine. A common application for an HRSG is in a combined-cycle power station, where hot exhaust from a gas turbine is fed to an HRSG to generate steam which in turn drives a steam turbine. This combination produces electricity in a more thermally efficient manner than either the gas turbine or steam turbine alone.

The Facility's HRSGs consist of three major components: the Evaporator, Superheater, and Economizer. The different components are put together to meet the operating requirements of the unit. Modular HRSGs normally consist of three sections: an LP (low pressure) section, a reheat/IP (intermediate pressure) section, and an HP (high pressure) section. The reheat and IP sections are separate circuits inside the HRSG. The IP steam partly feeds the reheat section. Each section has a steam drum and an evaporator section where water is converted to steam. This steam then passes through superheaters to raise the temperature and pressure past the saturation point.

Item #2 & 4 Steam Turbine and Support Systems Tier IV B-10

40 CFR Part 60 Subparts DA and DB, NOx Limits for Electric Utility Steam Generating Units and Industrial-Commercial-Institutional Steam Generating Units for New Source Performance Standards ("NSPS").

TAC Rule 106.512, Standard Permit for Electric Generating Units (EGU)

NOTE: Permits issued under Texas Clean Air Act's Health & Safety Code Sections 382.011, applies to all electric generating units that emit air contaminants, regardless of size, and it is to reflect Best Available Control Technology ("BACT") for electric generating units on an output basis in pounds of NOx per megawatt hour, adjusted to reflect a simple cycle power plant.

The steam turbine(s) found in the Facility operate on the Rankine cycle in combination with the Brayton cycle, as described above. Steam created in the Facility HRSG(s) from waste heat that would have otherwise been lost to the atmosphere enters the steam turbine via a throttle valve, where it powers the turbine

and connected generator to make electricity. Use of HRSG/Steam Turbine System combination provides the Facility with an overall efficiency of greater than 50%. Steam turbine systems similar to the Facility's have a history of achieving up to 95% availability on an annual basis and can operate for more than a year between shutdown for maintenance and inspections. (5)

Pollution Control Percentage Calculation: Avoided Emissions Approach

To calculate the percentage of the equipment or category deemed to be pollution control equipment, the Avoided Emissions approach has been used. This approach relies on thermal output differences between a conventional power generation system and the combined-cycle system at the Facility. Specifically, the percentage is determined by calculating the displacement of emissions associated with the Facility's thermal output and subtracting these emissions from a baseline emission rate. These displaced emissions are emissions that would have been generated by the same thermal output from a conventional system.

Greater energy efficiency reduces all air contaminant emissions, including the greenhouse gas, carbon dioxide. Higher efficiency processes include combined-cycle operation and combined heat and power ("CHP") generation. For electric generation the energy efficiency of the process expressed in terms of millions of British thermal units ("MMBTU's") per Megawatt-hour. Lower fuel consumption associated with increased fuel conversion efficiency reduces emissions across the board – that is NOx, SOx, particulate matter, hazardous air pollutants, and greenhouse gas emissions such as CO2.

In calculating the percent exempt for the listed items from the ECL-Part B, we utilized Output-Based NOx allocation method for both power generation projects that replaced existing facilities and "Greenfield" power and heat generation facilities. We looked at the various fossil fuel technologies in use today and chose the baseline facility to be a natural gas fuel-fired steam generator. We benchmarked this conventional generation to the subject natural gas-fired combined cycle generator at the Facility. By doing so, we narrowed the heat rate factors as much as possible to be conservative and uniform in modeling. The benchmark heat rate factor is the following:

Natural Gas fuel-fired Steam Generator: 10,490 BTU's/kWh

This baseline heat rate purposely omits other fossil fuel sources in order to eliminate impurity type characteristics, which in turn eliminated the NOx emission and cost of control differences of each fossil fuel and generator type. Comparing the emissions impact of different energy generation facilities is concise when emissions are measured per unit of useful energy output. For the purpose of our calculations, we converted all the energy output to units of MWh (1 MWh = 3.413 MMBTU), and compared the total emission rate to the baseline facility.

The comparison steps to calculate the NOx reduction is as follows:

Calculation (Reference Schedule A)

Step 1 – Subject Output-Based Limit Calculation (lbs NOx / MWh)

(Input-based Limit (lbs NOx/MMBTU)) X (Heat Rate (Btu/kWh)) / (1,000,000 Btu / 1,000 kWh) = Output: (lbs NOx/MWh),

Step 2 – Subject Output Conversion Calculation (NOx Tons / Year)

(Output (lbs NOx/MWh) X (Unit Design Capacity (MW)) X (Capacity Factor) X ((365 Days) X (24 hrs/day)) / 2,000 lbs = Output: (NOx Tons/Year)

Step 3 – Baseline Output-Based Limit Calculation (lbs NOx / MWh)

(Input-based Limit (lbs NOx/MWh)) X (Heat Rate (Btu/kWh)) / (1,000,000 Btu / 1,000 kWh) = Output: (lbs NOx/MWh)

Step 4 – Baseline Output Conversion Calculation (NOx Tons / Year)

(Output (lbs NOx/MMBtu) X (Unit Design Capacity (MW)) X (Capacity Factor) X ((365 Days) X (24 hrs/day)) / 2,000 lbs = Output: (NOx Tons/Year)

Step 5 – Percent NOx Reduction Calculation

$((\text{Output Baseline})_{\text{step 4}} - (\text{Output Subject})_{\text{step 2}}) / (\text{Output Subject})_{\text{step 2}} = \%$ Reduction Output Subject

Step 6 – Percent Exempt Calculation

(Total Subject Facility Cost) X (% NOx Reduction) = Capital Cost of NOx Avoidance

Step 7 – Percent Exempt Calculation

Total Cost of NOx Avoidance / Total Cost of HB 3732 Equipment = % Exempt

- If % Exempt is greater than 100% HB 3732 Equipment is 100% Exempt
- If % Exempt is less than 100% then HB 3732 Equipment is partially exempt at the Step 6 calculation.

NOTE: See the attached calculation sheet for the details regarding Facility-specific calculations and property tax exemption percentage results based upon these calculations.

REFERENCES

1. "Output-Based Regulations: A Handbook for Air Regulators", U.S. Environmental Protection Agency, Office of Atmospheric Programs – Climate Protection Partnerships Division, August, 2004, p.4.

2. "Output-Based Emissions Standards; Advancing Innovative Energy Technologies", Northeast-Midwest Institute; 2003, p. 9.

3. IBID, p.13.

4."Output-Based Regulations: A Handbook for Air Regulators", U.S. Environmental Protection Agency, Office of Atmospheric Programs – Climate Protection Partnerships Division, August, 2004, p.4.

5. http://www.cogeneration.net/Combined_Cycle_Power_Plants.htm

6. "Output-Based Emissions Standards; Advancing Innovative Energy Technologies", Northeast-Midwest Institute; 2003, p. 9.

9. PARTIAL PERCENTAGE CALCULATION

N/A.

10. PROPERTY CATEGORIES AND COSTS

See attached Schedule 10.

11. EMISSION REDUCTION INCENTIVE GRANT

Will an application for an Emission Reduction Incentive Grant be on file for this property/project:

[ ] Yes [X] No

12. APPLICATION DEFICIENCIES

After an initial review of the application, the TCEQ may determine that the information provided with the application is not sufficient to make a use determination. The TCEQ may send a notice of deficiency, requesting additional information that must be provided within 30 days of written notice.

13. FORMAL REQUEST FOR SIGNATURE

By signing this application, you certify that this information is true to the best of your knowledge and belief.

NAME: _____ DATE: 22 Apr 2008

TITLE: Director

COMPANY: Duff and Phelps LLC

Under Texas Penal Code, Section 37.10, if you make a false statement on this application, you could receive a jail term of up to one year and a fine up to $2,000, or a prison term of two to 10 years and a fine of up to $5,000.

14. DELINQUENT FEE/PENALTY PROTOCOL

This form will not be processed until all delinquent fees and/or penalties owed to the TCEQ or the Office of the Attorney General on behalf of the TCEQ are paid in accordance with the Delinquent Fee and Penalty Protocol. (Effective 9/1/2006)

Navasota - Colorado Bend - Phase I
3821 S. State Hwy 60
TCEQ Use Determination Application - 2008
Scheule 10
Tier IV

10. PROPERTY CATEGORIES AND COST

PROPERTY	PROJECT ID. NO.	IN SERVICE DATE	TAXABLE ON OR BEFORE 1/1/94? (Y / N)	TIER IV DECISION FLOW CHART BOX	ECL NUMBER	ESTIMATED PURCHASE COST	% EXEMPT	EXEMPT COST
Heat Recovery Steam Generators (HRSG)	1	2007	N	3	B-8	$ 26,544,805	100%	$ 26,544,805
Steam Turbine System	2	2007	N	3	B-10	$ 10,091,206	100%	$ 10,091,206
					Tier IV Total	$ 36,636,012		$ 36,636,012

Navasota - Colprado Bend - Phase II
3821 S. State Hwy 60
TCEQ Use Determination Application - 2008
Scheule 10
Tier IV

10. PROPERTY CATEGORIES AND COST

PROPERTY	PROJECT ID. NO.	IN SERVICE DATE	TAXABLE ON OR BEFORE 1/1/94? (Y / N)	TIER IV DECISION FLOW CHART BOX	ECL NUMBER	ESTIMATED PURCHASE COST	% EXEMPT	EXEMPT COST
Heat Recovery Steam Generators (HRSG)	3	CWIP	N	3	B-8	$ 30,018,278	100%	$ 30,018,278
Steam Turbine System	4	CWIP	N	3	B-10	$ 22,386,336	100%	$ 22,386,336
					Tier IV Total	$ 52,404,614		$ 52,404,614

52 404 614
36 636 012
89 040 636

Navasota Wharton Energy Partners LP
Colorado Bend Energy Center - Phase I
Schedule A - 2008 Thermal Efficiency Calculation

Subject Details:

Average Heat Rate [1]	7,746 (Btu/kWh)
NOx Emissions [2]	168.6 Tons / year
Plant Capacity [3]	275 MW
Capacity Factor [4]	100.00%
Technology [5]	Combined Cycle
Total Subject Facility Cost [6]	$169,296,979
Total Cost of Tier IV Equipment [7]	$36,636,012

Baseline Details:

Average Heat Rate [8]	10,490 Btu/kWh
Technology [9]	Steam Turbine

STEP 1
Subject Output-Based Limit Calculation (lbs NOx / MWh)

Input-based Limit (lbs NOx/MMBtu)	x	Heat Rate (Btu/kWh)	/	Unit Conversions (1,000,000 Btu / 1000 kWh)	=	Output-based Limit (lbs NOx/MWh)
0.0198		7,746		1,000		0.1533

STEP 2
Subject Output Conversion Calculation (NOx Tons / Year)

Output-based Limit (lbs NOx/MWh)	x	Capacity (MW)	x	Capacity Factor	x	Unit Conversions (365 days * 24 Hours / 2,000 lbs)	=	Output NOx (Tons/Year)
0.1533		275		100.00%		4		168.6

STEP 3
Baseline Output-Based Limit Calculation (lbs NOx / MWh)

Input-based Limit (lbs NOx/MMBtu)	x	Heat Rate (Btu/kWh)	/	Unit Conversions (1,000,000 Btu / 1000 kWh)	=	Output-based Limit (lbs NOx/MWh)
0.0198		10,490		1,000		0.2077

STEP 4
Baseline Output Conversion Calculation (NOx Tons / Year)

Output-based Limit (lbs NOx/MWh)	x	Capacity (MW)	x	Capacity Factor	x	Unit Conversions (365 days * 24 Hours / 2,000 lbs)	=	Output NOx (Tons/Year)
0.2077		275		100.00%		4		228.5

STEP 5
Percent NOx Reduction Calculation

[Output Baseline	-	Output Subject]	/	Output Subject	=	% NOx Reduction
228.5		168.6		168.6		35.5%

STEP 6
Percent Exempt Calculation

Total Subject Unit Cost	X.	% NOx Reduction	=	Capital Cost of NOx Avoidance
$169,296,979		35.5%		$60,100,428

STEP 7
Percent Exempt Calculation

Total Cost of NOx Avoidance	/	Total Cost of HB 3732 Equipment	=	% Exempt
$60,100,428		$36,636,012		164.0%

Conclude	100%

(1) - Heat rate represents plant performance test heat rate (HHV) and was provided by the client
(2) - NOx emissions is the NOx pollutant emission permit limit in tons per year provided by the client
(3) - Plant capacity is the average nominal capacity and was provided by the client
(4) - Capacity factor is the maximum operating level allowed under the emissions permit provided by the client
(5) - Technology represents the actual technology of the subject
(6) - Total subject facility cost represents the total cost to build the entire facility and it was determined based on data provided by the client
(7) - Total Tier IV equipment was determined by allocating the eligible TCEQ ECL part B equipment and their associated cost from actual data provide by the client
(8) - Baseline heat rate was published by the Energy Information Administration ("EIA")
(9) - Baseline technology represents the technology that the subject would have replaced at the time of the subjects construction

Navasota Wharton Energy Partners LP
Colorado Bend Energy Center - Phase II
Schedule A - 2008 Thermal Efficiency Calculation

Subject Details:

Average Heat Rate[1]	7,746 (Btu/kWh)
NOx Emissions [2]	168.6 Tons / year
Plant Capacity [3]	275 MW
Capacity Factor [4]	100.00%
Technology [5]	Combined Cycle
Total Subject Facility Cost [6]	$162,042,822
Total Cost of Tier IV Equipment [7]	$52,404,614

Baseline Details:

Average Heat Rate[8]	10,490 Btu/kWh
Technology [9]	Steam Turbine

STEP 1
Subject Output-Based Limit Calculation (lbs NOx / MWh)

Input-based Limit (lbs NOx/MMBtu)	x	Heat Rate (Btu/kWh)	/	Unit Conversions (1,000,000 Btu / 1000 kWh)	=	Output-based Limit (lbs NOx/MWh)
0.0198		7,746		1,000		0.1533

STEP 2
Subject Output Conversion Calculation (NOx Tons / Year)

Output-based Limit (lbs NOx/MWh)	x	Capacity (MW)	x	Capacity Factor	x	Unit Conversions (365 days * 24 Hours / 2,000 lbs)	=	Output NOx (Tons/Year)
0.1533		275		100.00%		4		168.6

STEP 3
Baseline Output-Based Limit Calculation (lbs NOx / MWh)

Input-based Limit (lbs NOx/MMBtu)	x	Heat Rate (Btu/kWh)	/	Unit Conversions (1,000,000 Btu / 1000 kWh)	=	Output-based Limit (lbs NOx/MWh)
0.0198		10,490		1,000		0.2077

STEP 4
Baseline Output Conversion Calculation (NOx Tons / Year)

Output-based Limit (lbs NOx/MWh)	x	Capacity (MW)	x	Capacity Factor	x	Unit Conversions (365 days * 24 Hours / 2,000 lbs)	=	Output NOx (Tons/Year)
0.2077		275		100.00%		4		228.5

STEP 5
Percent NOx Reduction Calculation

(Output Baseline	-	Output Subject)	/	Output Subject	=	% NOx Reduction
228.5		168.6		168.6		35.5%

STEP 6
Percent Exempt Calculation

Total Subject Unit Cost	X	% NOx Reduction	=	Capital Cost of NOx Avoidance
$162,042,822		35.5%		$57,525,202

STEP 7
Percent Exempt Calculation

Total Cost of NOx Avoidance	/	Total Cost of HB 3732 Equipment	=	% Exempt
$57,525,202		$52,404,614		109.8%

Conclude	100%

(1) - Heat rate represents the anticipated heat rate (HHV) and was provided by the client
(2) - NOx emissions is the NOx pollutant emission permit limit in tons per year provided by the client
(3) - Plant capacity is the average nominal capacity and was provided by the client
(4) - Capacity factor is the maximum operating level allowed under the emissions permit provided by the client
(5) - Technology represents the actual technology of the subject
(6) - Total subject facility cost represents the total cost to build the entire facility and it was determined based on data provide by the client
(7) - Total Tier IV equipment was determined by allocating the eligible TCEQ ECL part B equipment and their associated cost from actual data provide by the client
(8) - Baseline heat rate was published by the Energy Information Administration ("EIA")
(9) - Baseline technology represents the technology that the subject would have replaced at the time of the subjects construction.

Attachment B

Buddy Garcia, *Chairman*
Larry R. Soward, *Commissioner*
Bryan W. Shaw, Ph.D., *Commissioner*
Glenn Shankle, *Executive Director*

TEXAS COMMISSION ON ENVIRONMENTAL QUALITY

Protecting Texas by Reducing and Preventing Pollution

USE DETERMINATION

The Texas Commission on Environmental Quality has reviewed Use Determination Application, 07-11926, filed by:

NAVASOTA WHARTON ENERGY PARTNERS LP
COLORADO BEND
3821 S STATE HWY 60
WHARTON TX 77488

The pollution control property/project listed in the Use Determination Application is:

This facility has four thermally efficient heat recovery steam generators (HRSGs) and two steam turbines. This application is a Tier IV application seeking a partial use determination for the HRSGs and the enhanced steam turbines.

The outcome of the review is:

A 100% positive use determination for the four Heat Recovery Steam Generators. This equipment is considered to be pollution control equipment and was installed to meet or exceed federal or state regulations.

A negative determination is issued for the two steam turbines. The use of the steam turbines does not provide an environmental benefit at the site. The steam turbines are not considered to be pollution control equipment.

Executive Director

May 1 2008
Date

TAX RELIEF FOR POLLUTION CONTROL PROPERTY: TECHNICAL REVIEW DOCUMENT

Reviewed By: RLH App. No.: 07 - 11926 Review Start Date: 4/8/2008

Company Name: NAVASOTA WHARTON ENERGY PARTNERS LP
Facility Name: COLORADO BEND
County: WHARTON Outstanding Fees: N
Batch/Voucher Number:B500028

ADMINISTRATIVE REVIEW

Administrative Complete Date:4/8/2008

TIER LEVEL
What Tier is this application? The application was filed as a Tier IV application. Is this the appropriate level?

The property listed on this application, Heat Recovery Steam Generators and a steam turbine are items B8 and B10 on the Equipment and Categories List. This application was filed as a Tier IV. Tier IV is the appropriate level for this application.

RELEVANT RULE, REGULATION, OR STATUTORY PROVISION
The rule listed in the application is: 40 CFR 60.44Da
The appropriate rule is: 40 CFR 60.44Da

Explain why this is the appropriate rule?

40 CFR 60.Subpart DA: Standards of Performance for New Stationary Sources. Standards of performance for Electric Utility Steam Generating Units for Which Construction is Commenced after September 18, 1978. This is an appropriate rule.

BRIEF DESCRIPTION OF PROPERTY
The property is described as:

This facility has four thermally efficient heat recovery steam generators (HRSGs) and two steam turbines. This application is a Tier IV application seeking a partial use determination for the HRSGs and the enhanced steam turbines.

Is an adequate description and purpose of the property provided? Does it list the anticipated environmental benefits? Are sketches and flow diagrams provided if needed?

An adequate description of the property was provided, and the purpose of the property was listed. The anticipated environmental benefit is listed. Sketches and flow diagrams were provided.

DECISION FLOWCHART(30 TAC 17.15(a))
Mark the appropriate boxes: Box 3 Box 5 Box 6(IV) Y Box 10(III) Box 12(I) Box 13(II)
PART B DECISION FLOWCHART (17.15(b))
Mark the appropriate boxes: Box 1Y Box 2 Y Box 3 Y

Describe how the property flowed through the Decision Flowchart:

The Heat Recovery Steam Generators (HRSGs) are listed on Part B of the Equipment & Categories List as item B-8. As Part B equipment the HRSGs leave the Decision Flow Chart at Box 6 and pass through Box 1 of the Part B Decision Flow Chart with a yes answer. Since the use

of HRSGs provide an environmental benefit of reduced NOx emissions at the site there is a yes answer for Box 2. Since there is a reduction in NOx emissions there is an environmental rule which is being met, so there is a yes answer to Box 3. The steam turbine passes through Box 1 on the Part B Decision Flow Chart with a yes answer. Since the use of the steam turbine does not provide an environmental benefit at the site a no answer is the result of Box 2. The steam turbine is not eligible for a positive determination.

TIER III or IV APPLICATIONS

Does your calculation agree with the applicants?

No. The application contains a proposed formula for calculating the pollution control value of the HRSGs and the steam turbine. The formula is outcome determinative, and its focus is not on the pollution control aspect of the property. The Executive Director disagrees with this formula.

PROPERTY CATEGORIES AND COSTS

Is the table completed correctly? Has the applicant certified that all listed property became taxable for the first time after January 1, 1994? Is all information necessary for conducting the technical review included.

The table was completed correctly. The applicant certified that all listed property became taxable for the first time after January 1, 1994. All the information necessary for conducting the technical review was included on the application.

TECHNICAL DEFICIENCIES

Is the application complete as received: Y If the application was not administratively complete explain below when justifying the final decision in the final determination section. If the application was not technically complete then:

Provide the language to be used in the Notice of Deficiency (NOD) letter:

Summarize the NOD response:

Provide the language used in the second NOD letter:

Summarize the second NOD response:

Provide the language used in the thied NOD letter:

Summarize the third NOD response:

FINAL DETERMINATION

If the property description has been summarized enter the detailed property description:

This facility has four thermally efficient heat recovery steam generators (HRSGs) and two steam

turbines. This application is a Tier IV application seeking a partial use determination for the HRSGs and the enhanced steam turbines.

Provide the reason for your final determination:

The Heat Recovery Steam Generators meet all of the requirements of Chapter 17. A positive use determination based on the most appropriate formula should be issued for the Heat Recovery Steam Generators. The most appropriate formula has been determined by the Executive Director. A negative determination should be issued for the steam turbine. The use of the steam turbine does not result in there being an environmental benefit at the site.

Provide the language for the final determination.

A positive use determination of 100% for the four Heat Recovery Steam Generators. A negative determination is issued for the steam turbine. The use of the steam turbine does not provide an environmental benefit at the site. The steam turbine is not considered to be pollution control equipment.

Highlight the required signatures and establish the appropriate due dates.

Reviewed: [signature] **Date Signed:** 5/1/08

Peer Reviewed: [signature] **Date Signed:** 5-1-08

Team Leader: [signature] **Date Signed:** 5/1/08

Section Manager: [signature] **Date Signed:** MAY 1 2008

Division Director: [signature] **Date Signed:** MAY 1 2008

Attachment C

WHARTON COUNTY
APPRAISAL DISTRICT
2407 1/2 N. Richmond Road
Wharton, Texas 77488

Phone: 979-532-8931
Fax: 979-532-5691

TEXAS COMMISSION ON ENVIRONMENTAL QUALITY
2008 MAY 21 AM 10:00
CHIEF CLERKS OFFICE

May 19, 2008

Office of the Chief Clerk - MC 105
Texas Commission on Environmental Quality
PO Box 13087
Austin, TX. 78711-3087

Re: TCEQ Use Determination No. **07-11926**

Dear Ms. Castañuela,

I am writing this letter as an official appeal of the TCEQ's property tax Pollution Control Exemption Use Determination with the tracking number **07-11926** filed by **Navasota Wharton energy Partners I** for the **Colorado Bend Power Generation** facility. We believe that the Heat Recovery Steam Generators described in this application are production equipment in that they burn natural gas to create steam to generate electricity. This creates pollutants, not reduces them.

Secondly, the pollution control components associated with the HRSG's that do reduce pollution have already been exempted under Use Determination 07-11925. Therefore, this second exemption of the entire HRSG only serves to exempt the non-pollution control components of the units.

I respectfully request that our appeal regarding this Use Determination be granted and the exemption be denied.

Hugh L. Landrum & Associates, Inc. will be acting as our agent in this matter.

Thank you for your time and consideration.

Sincerely,

Tylene Gamble
Chief Appraiser
Wharton County Appraisal District

Attachment D

Buddy Garcia, *Chairman*
Larry R. Soward, *Commissioner*
Bryan W. Shaw, Ph.D., *Commissioner*
Mark R. Vickery, P.G., *Executive Director*

TEXAS COMMISSION ON ENVIRONMENTAL QUALITY

Protecting Texas by Reducing and Preventing Pollution

December 3, 2008

LaDonna Castañuela, Chief Clerk
Texas Commission on Environmental Quality
Office of the Chief Clerk, MC-105
P.O. Box 13087
Austin, Texas 78711-3087

Re: TCEQ Docket Numbers:
2008-0830-MIS-U (UD 07-11914/Tenaska Gateway Partners, Ltd)
2008-0831-MIS-U (UD 07-11966/Freestone Power Generation, L.P)
2008-0832-MIS-U (UD 07-11971/Borger Energy Associates, LP)
2008-0849-MIS-U (UD 07-11969/Brazos Valley Energy, L.P.)
2008-0850-MIS-U (UD 07-11994/Freeport Energy Center, L.P.)
2008-0851-MIS-U (UD 07-11926/Navasota Wharton Energy Partners, LP)
Executive Director's Response Brief to Rusk County, Freestone Central, Hutchinson County, Fort Bend Central, Brazoria County, and Wharton County Appraisal Districts' Appeals of the Executive Director's Use Determinations

Dear Ms. Castañuela:

Enclosed for filing, please find an original and 7 copies of the *"Executive Director's Response Brief to Rusk County, Freestone Central, Hutchinson County, Fort Bend Central, Brazoria County, and Wharton County Appraisal Districts' Appeals of the Executive Director's Negative Use Determinations."*

Please file-stamp these documents and return one copy to D. A. Chris Ekoh, Staff Attorney, Environmental Law Division, MC 173. If you have any questions, please do not hesitate to contact me at (512) 239-5487.

Sincerely,

D. A. Chris Ekoh, Staff Attorney
Environmental Law Division

CHIEF CLERKS OFFICE
2008 DEC -3 PM 4:10
TEXAS COMMISSION ON ENVIRONMENTAL QUALITY

TCEQ Docket Numbers
2008-0830-MIS-U (UD 07-11914/Tenaska Gateway Partners, Ltd – Rusk County)
2008-0831-MIS-U (UD 07-11966/Freestone Power Generation, L.P. – Freestone County)
2008-0832-MIS-U (UD 07-11971/Borger Energy Associates, LP – Hutchinson County)
2008-0849-MIS-U (UD 07-11969/Brazos Valley Energy, L.P. – Fort Bend County)
2008-0850-MIS-U (UD 07-11994/Freeport Energy Center, L.P. – Brazoria County)
2008-0851-MIS-U (UD 07-11926/Navasota Wharton Energy Partners, LP – Wharton County)

APPEAL OF THE EXECUTIVE DIRECTOR'S USE DETERMINATIONS ISSUED TO TENASKA GATEWAY PARTNERS, LTD; FREESTONE POWER GENERATION, L.P.; BORGER ENERGY ASSOCIATES, LP; BRAZOS VALLEY ENERGY, L.P.; FREEPORT ENERGY CENTER, L.P.; and NAVASOTA WHARTON ENERGY PARTNERS, LP	§	BEFORE THE TEXAS COMMISSION ON ENVIRONMENTAL QUALITY

TEXAS COMMISSION ON ENVIRONMENTAL QUALITY
2008 DEC 31 PM 4:
CHIEF CLERKS OFFICE

EXECUTIVE DIRECTOR'S RESPONSE BRIEF TO RUSK COUNTY, FREESTONE CENTRAL, HUTCHINSON COUNTY, FORT BEND CENTRAL, BRAZORIA COUNTY, AND WHARTON COUNTY APPRAISAL DISTRICTS' APPEALS OF THE EXECUTIVE DIRECTOR'S USE DETERMINATIONS

The Executive Director of the Texas Commission on Environmental Quality (the Commission or TCEQ) files this Response to the Appeals of the Executive Director's Use Determinations Issued to Tenaska Gateway Partners, Ltd (Tenaska); Freestone Power Generation, L.P. (Freestone); Borger Energy Associates, LP (Borger); Brazos Valley Energy, L.P (Brazos); Freeport Energy Center, L.P (Freeport); and Navasota Wharton Energy Partners, LP (Navasota). The appeals were submitted by or on behalf of the affected county appraisal districts. The regulated entities did not appeal the Executive Director's use determinations.

For the reasons described below, the Executive Director respectfully requests that the Commission adopt the recommendation of the Executive Director and remand the respective appeals to the Executive Director to issue new determinations consistent with the Executive Director's recommendation as adopted by the Commission.

Part I of this brief presents a background of the Tax Exemption for Pollution Control Property Program, including a discussion of House Bill 3732; Part II discusses the procedural history of each application including the Executive Director's determinations; Part III describes the devices involved in these appeals, and the circumstances leading to the formation of a Workgroup to assist in establishing the method of calculating the proper pollution control percentage for the devices; and Part IV presents the Executive Director's recommendation to the Commission on the proper pollution control percentage to adopt for the devices involved in these appeals.

I.

PROGRAM BACKGROUND

These appeals of the Executive Director's use determinations are filed pursuant to H.B. 3121 (77th Tex. Legislature, 2001) establishing an appeals process for use determinations and the Commission rules implementing the legislation.[1]

In 1993, the citizens of Texas voted to adopt a tax measure called Proposition 2 (Prop 2). Prop 2 was implemented when Article 8, § 1-l was added to the Texas Constitution on November 2, 1993. The amendment allowed the legislature to "exempt from ad valorem taxation all or part of real and personal property used, constructed, acquired, or installed wholly or partly to meet or exceed rules or regulations adopted by any environmental protection agency of the United States, this state, or a political subdivision of this state for the prevention, monitoring, control, or reduction of air, water, or land pollution."[2]

The Texas Legislature codified the constitutional amendment in 1993 as TEX. TAX CODE § 11.31 (effective January 1, 1994). The statutory language in the codified version mirrored the language of Article 8, § 1-l. The statute sets up a two-step process to obtain tax exemption for pollution control property. First, a person seeking tax exemption for pollution control property must obtain a positive use determination from the Executive Director that the property is used wholly or partly for pollution control.[3] Second, once a person obtains a positive use determination from the Executive Director, the person then applies to the appraisal district where the property is located to receive the actual tax exemption. It is the performance of this second step by the chief appraiser that removes the property from the tax roll.[4]

In 2001, the legislature amended Section 11.31 when it passed House Bill 3121 (effective September 1, 2001). This bill added several procedural requirements to Section 11.31, including a provision requiring the establishment and implementation of a process to appeal use determinations.[5] The amendment authorized the Commission to adopt rules establishing specific standards for the Executive Director to follow in making use determinations for property that qualified for either full or partial determinations.[6]

In 2007, the legislature amended Section 11.31 when it passed House Bill 3732 (effective September 1, 2007).[7] The amendment added three new subsections to Section 11.31 by requiring the:

- Commission to adopt, by rule, a list of pollution control property which must include the 18 categories of equipment outlined in HB 3732;

---

[1] See TEX. TAX CODE § 11.31 and 30 TEX. ADMIN. CODE § 17.25.
[2] TEX. CONST. art. 8, § 1-l(a) (November 2, 2002).
[3] TEX. TAX CODE § 11.31(c) & (d).
[4] TEX. TAX CODE § 11.31(i).
[5] See TEX. TAX CODE § 11.31(e).
[6] TEX. TAX CODE § 11.31(g).
[7] House Bill 3732 (80th Legislature, 2007).

- Commission to adopt a procedure to review the list at least once every three years and allows the removal of items from the list when there is compelling evidence that the item does not provide pollution control; and

- Executive Director to review applications containing only items on the adopted list, and to issue a determination without regard to the information provided in response to Section 11.31(c)(1) within 30 days of receipt of the required application documents.[8]

On January 16, 2008, the Commission adopted rules implementing HB 3732.[9] The adopted rules include the "Equipment and Categories List" (ECL).[10] Part B of the ECL consists of the 18 categories of equipment listed by the legislature in HB 3732.[11] The rules revised the review standards contained in Section 17.15 by creating a revised "Decision Flow Chart" and adopting a new "Part B Decision Flow Chart."[12] The rules created a new Tier level of application (Tier IV) for the categories of equipment contained in Part B of the ECL.[13] The use determinations subject to these appeals were filed as Tier IV applications under the newly adopted rules.

Appeals under 30 TEX. ADMIN. CODE § 17.25 may be filed by either the applicant seeking the determination, or by the chief appraiser of the tax appraisal district affected by the determination.[14] The appeal must be in writing and filed within 20 days of receipt of the use determination letter.[15] The Applicant is presumed to have received notice of the determination on the "third regular business day after the date the notice of the Executive Director's action is mailed by first class mail."[16] The appellant is required by Section 17.25(b)(5) to explain the basis for the appeal. Under Section 11.31(i), "the chief appraiser shall accept a final determination by the executive director as conclusive evidence that the facility, device, or method is used wholly or partly as pollution control property."

II.

PROCEDURAL BACKGROUND

Tenaska Gateway Partners, Ltd – Rusk County (Use Determination Number 07-11914)

On March 14, 2008, Tenaska filed a Tier IV application with the Executive Director seeking a use determination under Section 11.31 of the Texas Tax Code for 3 Heat Recovery Steam Generators (HRSG) and 1 enhanced steam turbine. Tenaska claimed the devices were installed to control Nitrogen Oxides (NO_x) and cited 40 C.F.R § 60.44Da and 30 TEX. ADMIN. CODE § 117.3010 as the rules it is meeting or exceeding by installing the devices. The application was

[8] Id. See also, 33 Tex.Reg 932, 933 (February 1, 2008).
[9] 33 Tex.Reg 932 (February 1, 2008). The rules became effective on February 7, 2008.
[10] 33 Tex.Reg at 956; and 30 TEX.ADMIN. CODE 17.14(a) (Effective February 7, 2008). Unless otherwise specifically stated, all references to 30 TAC Chapter 17 refer to the rules effective February 7, 2008.
[11] 33 Tex.Reg at 967; and 30 TEX.ADMIN. CODE 17.14(a).
[12] 30 TEX.ADMIN. CODE 17.15(a) and (b).
[13] 30 TEX.ADMIN. CODE 17.2(16).
[14] TEX. TAX CODE § 11.31(e); and 30 TEX. ADMIN. CODE § 17.25(a)(2).
[15] 30 TEX. ADMIN. CODE § 17.25(b)
[16] Id.

declared to be administratively complete on April 8, 2008. The technical review of the application was completed on May 1, 2008. On May 1, 2008, the Executive Director issued a 100% positive use determination for the HRSGs and a negative use determination for the enhanced steam turbine. Rusk County Appraisal District filed a timely appeal on May 19, 2008. On May 27, 2008, Wayne Frazell (with Pritchard & Abbott, Inc.) filed "detailed comments" on behalf of Rusk County Appraisal District, explaining its reasons for appeal. A copy of the application, administrative review documents, technical review documents, and use determination letter are attached herein as **ED's Exhibit 1**.

Freestone Power Generation L.P – Freestone County (Use Determination Number 07-11966)

On March 28, 2008, Freestone filed a Tier IV application with the Executive Director seeking a use determination under Section 11.31 of the Texas Tax Code for 4 HRSGs, 2 steam turbines, and support systems. Freestone claimed the devices were installed to control Nitrogen Oxides (NO_x) and cited 40 C.F.R § 60.44Da and 30 TEX. ADMIN. CODE § 106.512 as the rules it is meeting or exceeding by installing the devices. The application was declared to be administratively complete on April 8, 2008. The technical review of the application was completed on May 1, 2008. On May 1, 2008, the Executive Director issued a 100% positive use determination for the HRSGs and a negative use determination for the steam turbines, and support systems. Freestone Central Appraisal District filed a timely appeal on May 16, 2008. On May 27, 2008, Wayne Frazell (with Pritchard & Abbott, Inc.) filed "detailed comments" on behalf of Freestone County Appraisal District explaining the its reasons for appeal. A copy of the application, administrative review documents, technical review documents, and use determination letter are attached herein as **ED's Exhibit 2**.

Borger Energy Associates, LP – Hutchinson County (Use Determination Number 07-11971)

On March 31, 2008, Borger filed a Tier IV application with the Executive Director seeking a use determination under Section 11.31 of the Texas Tax Code for 2 HRSGs. Borger claimed the devices were installed to control Nitrogen Oxides (NO_x) and cited 40 C.F.R § 60.44Da and 30 TEX. ADMIN. CODE § 106.512 as the rules it is meeting or exceeding by installing the devices. The application was declared to be administratively complete on April 8, 2008. The technical review of the application was completed on May 1, 2008. On May 1, 2008, the Executive Director issued a 100% positive use determination for the HRSGs. Hutchinson County Appraisal District filed a timely appeal on May 16, 2008. On May 27, 2008, Wayne Frazell (with Pritchard & Abbott, Inc.) filed "detailed comments" on behalf of Hutchinson County Appraisal District explaining the its reasons for appeal. A copy of the application, administrative review documents, technical review documents, and use determination letter are attached herein as **ED's Exhibit 3**.

Brazos Valley Energy L.P – Fort Bend County (Use Determination Number 07.11969)

On March 28, 2008, Brazos filed a Tier IV application with the Executive Director seeking a use determination under Section 11.31 of the Texas Tax Code for 2 HRSGs and 1 steam turbine. Brazos claimed the devices were installed to control Nitrogen Oxides (NO_x) and cited 40 C.F.R §

60.44Da and 30 TEX. ADMIN. CODE § 106.512 as the rules it is meeting or exceeding by installing the devices. The application was declared to be administratively complete on April 8, 2008. The technical review of the application was completed on May 1, 2008. On May 1, 2008, the Executive Director issued a 100% positive use determination for the HRSGs and a negative use determination for the steam turbine. Fort Bend Central Appraisal District filed a timely appeal on May 21, 2008. A copy of the application, administrative review documents, technical review documents, and use determination letter are attached herein as **ED's Exhibit 4**.

Freeport Energy Center, L.P – Brazoria County (Use Determination Number 07-11994)

On April 3, 2008, Freeport filed a Tier IV application with the Executive Director seeking a partial use determination under Section 11.31 of the Texas Tax Code for 1 HRSG, 1 steam turbine, and condenser and ancillary pump systems. Freeport claimed the devices were installed to control Nitrogen Oxides (NO_x) and cited 40 C.F.R § 60.44Da as the rule it is meeting or exceeding by installing the devices. The application was declared to be administratively complete on April 8, 2008. The technical review of the application was completed on May 1, 2008. On May 1, 2008, the Executive Director issued a 100% positive use determination for the HRSG and a negative use determination for the steam turbine, and condenser and ancillary pump systems. Brazoria County Appraisal District filed a timely appeal on May 21, 2008. A copy of the application, administrative review documents, technical review documents, and use determination letter are attached herein as **ED's Exhibit 5**.

Navasota Wharton Energy Partners, LP – Wharton County (Use Determination Number 07-11926)

On March 19, 2008, Navasota filed a Tier IV application with the Executive Director seeking a use determination under Section 11.31 of the Texas Tax Code for 4 HRSGs and 2 steam turbines. Navasota claimed the devices were installed to control Nitrogen Oxides (NO_x) and cited 40 C.F.R § 60.44Da and 30 TEX. ADMIN. CODE § 106.512 as the rules it is meeting or exceeding by installing the devices. The application was declared to be administratively complete on April 8, 2008. The technical review of the application was completed on May 1, 2008. On May 1, 2008, the Executive Director granted a 100% positive use determination for the HRSGs and a negative use determination for the steam turbines. Wharton County Appraisal District filed a timely appeal on May 21, 2008. A copy of the application, administrative review documents, technical review documents, and use determination letter are attached herein as **ED's Exhibit 6**.

III.

HRSGs and CALCULATION OF POLLUTION CONTROL PERCENTAGE

The properties involved in these appeals are HRSGs and steam turbines used at combined-cycle facilities to generate electricity. The Tier IV applications were submitted under Part B-8 of the ECL for HRSGs and Part B-10 of the ECL for steam turbines. The appeals challenge only the Executive Director's determinations granting 100% Tier IV positive use determinations for the HRSGs. The Executive Director's determinations regarding the steam turbines were not appealed.

Since the enactment of HB 3732, the Executive Director has received approximately thirty seven Tier IV use determination applications for HRSGs and steam turbines installed at combined-cycle electric generation facilities. The Executive Director has issued 100% positive use determinations for twenty six HRSGs. Six out of the twenty six use determinations were appealed by the affected appraisal districts, and all six are the subject of the instant appeals. There are currently eleven applications awaiting determinations.

Under TCEQ rules, an applicant for a Tier IV use determination is required to calculate the use determination for the equipment or categories of equipment included in the application. "It is the responsibility of the applicant to propose a reasonable method for determining the use determination percentage. It is the responsibility of the executive director to review the proposed method and make the final determination."[17] The challenge with most Tier IV applications including those involved in these appeals is the calculation of the use determination percentage for each category of equipment. A description of the functions performed by a HRSG will help explain why the calculation methodologies vary from one application to another.

A HRSG acts as a fuel substitute in a typical combined-cycle installation. A typical HRSG captures hot exhaust gases from a combustion turbine. The resulting heat is converted "into high pressure and temperature steam" which is used to propel a steam turbine to generate electrical energy.[18] This process eliminates the need for the additional burning of coal or other hydrocarbon based fuel in order to obtain the same increase in electrical energy generation output at the site. Installation of a HRSG in a combined-cycle facility "allows more electrical energy to be produced for a given heat input" compared to a "simple cycle or traditional steam boiler/turbine (Rankine cycle) configuration."[19]

Calculation Methodologies Provided in the Respective Applications:

Tenaska Gateway: Tenaska proposed a calculation based on comparing a single cycle plant with a selective catalytic reduction (SCR) system installed to control NO_x to a combined-cycle plant with an HRSG installed to boost efficiency with less NO_x emissions. Based on this premise, Tenaska claimed that it merely substituted a HRSG in a combined-cycle plant for an SCR in a single cycle plant. As a result, Tenaska wanted a use determination percentage that reflected the total capital cost of the hypothetical SCR that it did not install. The arithmetic and method of calculation is best expressed on pages 5-6 of the application.[20]

---

[17] 30 TEX. ADMIN. CODE § 17.17(d).

[18] Yongjun Zhao, Hongmei Chen, Mark Waters, and Dimitri N. Mavris; "Modeling and Cost Optimization of Combined Cycle Heat Recovery Generator Systems" (Proceedings of ASME Turbo Expo 2003 - Power of Land, Sea, and Air, GT2003-38568, June 16-19, 2003). See also, Application for Use Determinations filed by Ennis-Tractebel Power Company, LP).

[19] Id. A single-cycle or simple-cycle power plant uses a "fuel-fired turbine" to generate electricity. A combined-cycle power plant combines "gas turbine engine" with a heat recovery steam generator and a steam turbine system to generate electricity. Single-cycle facilities are only able to utilize a portion of the heat that the combustion of their fuel generates. The excess heat generated from combustion is generally wasted in a single cycle facility. The HRSGs at combined-cycle facilities recapture that waste heat; and use it to make steam to generate electricity; thereby, improving overall efficiency. See Footnote 18 ("Modeling and Cost Optimization of Combined Cycle Heat Recovery Generator Systems").

[20] See ED's Exhibit 1 (Application for Tier IV use determination submitted by Tenaska Gateway Partners, Ltd.).

The problems with this calculation are as follows. First, the cost of the steam turbine which is not a pollution control property was factored into the calculation. Second, HRSGs and SCRs are totally different mechanisms. The latter is a known and acceptable pollution control device, which may still be installed somewhere in the plant to control pollution. Once installed, Tenaska can apply and receive a use determination for it. Third, SCRs are custom-built for each facility. Choosing and using an average cost, as Tenaska did, does not come close to reflecting the actual value of a SCR that would be installed if there was a need to install one. Fourth, the calculation removes the focus of the evaluation from the purported pollution control property, and places it on another unrelated property. The calculation is not based on the equipment for which use determination is sought. Finally, it is impossible to apply the review standards, particularly the Decision Flow Charts, using this calculation methodology.

Freeport Energy: Freeport requested a 98% partial use determination for replacing an old power generation plant with a combined-cycle plant using an HRSG. Freeport based its proposed calculation on the NO_x reduction achieved by the new plant. Freeport claimed that NO_x emissions were reduced from 147ppm (old plant) to 3ppm (new plant). The partial percentage calculation based on reduction in NO_x emissions was 98% of the total cost of installation of the HRSG, steam turbine, and condenser and ancillary pump system. The method of calculation is best expressed on pages 5-6 of the application.[21]

The problems with this calculation are as follows. First, the cost of the steam turbine, condenser and ancillary pump system which are not pollution control properties are factored into the calculation. Second, the calculation removes the focus of the evaluation from the purported pollution control equipment, and places it on NO_x emissions. The calculation is not based on the equipment for which use determination is sought. Third, the calculation is based on the cost of the entire facility rather than the cost of the HRSG. Finally, it is impossible to apply the review standards, particularly the Decision Flow Charts, using this calculation methodology.

Freestone Power Generation: Freestone proposed a use determination percentage calculation based on "avoided emissions." This "approach relies on thermal output differences between a conventional power generation system and the combined-cycle system."[22] This approach "utilized output-based NO_x allocation method for both power generation projects."[23] The method of calculation is best expressed on Schedule A, and pages 11-12 of the application.[24]

The problems with this calculation are as follows. First, the cost of the entire facility was used in the calculation. Second, the cost of the steam turbines and supporting systems which are not pollution control properties are factored into the calculation. Third, the calculation removes the focus of the evaluation from the purported pollution control property and places it on NO_x emissions output. The calculation is not based on the devices for which use determinations are sought. Fourth, the calculation is based on several assumptions, none of which reflect the pollution control properties at issue in this case. Finally, it is impossible to apply the review

[21] See ED's Exhibit 5 (Application for Tier IV use determination submitted by Freeport Energy Center, L.P.).
[22] See ED's Exhibit 2 (Application for Tier IV use determination submitted by Freestone Power Generation, L.P.).
[23] Id.
[24] Id.

standards, particularly the Decision Flow Charts, using this calculation methodology. Finally, as a result of the flawed assumptions, the use of the total cost of the facility, and the use of the total cost of the HRSGs and steam turbines, the applicant came up with a pollution control percentage of 384%.

Borger Energy: Like Freestone, Borger proposed a use determination percentage calculation based on "avoided emissions." This "approach relies on thermal output differences between a conventional power generation system and the combined-cycle system." [25] The approach "utilized output-based NO_x allocation method for both power generation projects."[26] The method of calculation is best expressed on Schedule A, and pages 7-9 of the application.[27]

The problems with this calculation are as follows. First, the cost of the entire facility was used in the calculation. Second, the calculation removes the focus of the evaluation from the purported pollution control properties and places it on NO_x emissions output. The calculation is not based on the devices for which use determinations are sought. Third, the calculation is based on several assumptions, none of which reflect the pollution control properties at issue in this case. Fourth, it is impossible to apply the review standards, particularly the Decision Flow Charts, using this calculation methodology. Finally, as a result of the flawed assumptions and the use of the total cost of the facility, the applicant came up with a pollution control percentage of 128.6%.

Brazos Valley Energy: Brazos proposed a pollution control percentage calculation based on "avoided emissions." This "approach relies on thermal output differences between a conventional power generation system and the combined-cycle system." [28] The approach "utilized output-based NOx allocation method for both power generation projects."[29] The method of calculation is best expressed on Schedule A, and pages 9-10 of the application.[30]

The problems with this calculation are as follows. First, the cost of the entire facility was used in the calculation. Second, the cost of the steam turbines and supporting systems which are not pollution control devices are factored into the calculation. Third, the calculation removes the focus of the evaluation from the purported pollution control properties and places it on NOx emissions output. The calculation is not based on the devices for which use determinations are sought. Fourth, the calculation is based on several assumptions, none of which reflects the pollution control properties at issue in this case. Fifth, it is impossible to apply the review standards, particularly the Decision Flow Charts, using this calculation methodology. Finally, as a result of the flawed assumptions, the use of the total cost of the facility, and the use of the total cost of the HRSGs and steam turbine, the applicant came up with a pollution control percentage of 248.7%.

Navasota Energy: Navasota proposed a pollution control percentage calculation based on "avoided emissions." This "approach relies on thermal output differences between a

---

[25] See ED's Exhibit 3 (Application for Tier IV use determination submitted by Borger Energy Associates, LP.).
[26] Id.
[27] Id.
[28] See ED's Exhibit 4 (Application for Tier IV use determination submitted by Brazos Valley Energy, L.P.).
[29] Id.
[30] Id.

conventional power generation system and the combined-cycle system."[31] The approach "utilized output-based NO_x allocation method for both power generation projects."[32] The method of calculation is best expressed on Schedule A, and pages 9-10 of the application.[33]

The problems with this calculation are as follows. First, the cost of the entire facility was used in the calculation. Second, the cost of the steam turbines and supporting systems which are not pollution control devices are factored into the calculation. Third, the calculation removes the focus of the evaluation from the purported pollution control properties and places it on NO_x emissions output. The calculation is not based on the devices for which use determinations are sought. Fourth, the calculation is based on several assumptions, none of which reflects the pollution control properties at issue in this case. Fifth, it is impossible to apply the review standards, particularly the Decision Flow Charts, using this calculation methodology. Finally, as a result of the flawed assumptions, the use of the total cost of the facility, and the use of the total cost of the HRSGs and steam turbine, the applicant came up with a pollution control percentage of 164%.

The pollution control percentages and the methods of calculation used by the applicants vary considerably. The following are examples of the percentages derived by using the avoided emissions calculation:

Applicant	Calculation Method	Pollution Control %
Channel Energy	Avoided emission based on No_x Output	366.1%
Pasadena Cogeneration	Avoided emission based on No_x Output	165%
TH Wharton	Avoided emission based on No_x Output	398.3%
Cedar Bayou 4	Avoided emission based on No_x Output	225.9%
Mustang Units 1, 2, &3	Avoided emission based on No_x Output	142.18%
Calpine Baytown	Avoided emission based on No_x Output	298.75%
Deer Park Energy	Avoided emission based on No_x Output	503.55%
Magic Valley	Avoided emission based on No_x Output	263.55%
FPL Forney	Avoided emission based on No_x Output	213.64%

Based on various calculations and initial research by staff, the Executive Director allowed 100% positive use determination for the first set of applications adjudicated. Subsequently, the Executive Director received new applications, with varying use determination percentages. The Executive Director then decided to develop a consistent and uniform use determination percentage for HRSGs.

[31] See ED's Exhibit 6 (Application for Tier IV use determination submitted by Navasota Wharton Energy Partners, LP.).
[32] Id.
[33] Id.

IV.

THE WORKGROUP AND EXECUTIVE DIRECTOR'S RECOMMENDATION

Faced with the difficulties of coming up with a reasonable use determination percentage for HRSGs, the Executive Director assembled a Workgroup to gather information that would lead to the development of a uniform use determination percentage for the equipment. The Workgroup was attended by applicants or their representatives whose use determinations are currently pending on appeal; applicants or their representatives whose use determination applications are currently pending in-house; appraisal districts and their representatives; and environmental and public interest groups. The Workgroup met twice and provided input to the Executive Director on this issue. Based on staff research and input from the Workgroup, the following conclusions were made:

1. A comparable combined cycle power plant produces less air emissions than the same size simple cycle power plant. The reduced emissions are attributed to reduced combustion. The installation of the HRSGs lead to the reduced emissions.

2. The steam turbine systems are used solely to produce electricity. As 100% production equipment the steam turbine systems are not eligible for a positive use determination.

3. The pollution control aspect of the combined cycle plant relates solely to the installation of the HRSGs. However, installation of HRSG also results in increased efficiency and production gain.

The Executive Director reviewed several calculation methodologies provided in different applications and at the Workgroup meetings; calculations provided by Wayne Frazell, with Pritchard & Abbott; and comments and suggestions made by Workgroup participants. The goal was to assign an appropriate percentage to the pollution control aspect of the HRSGs, while taking into account the production gain associated with their installation. Of all the calculations reviewed, the method furnished by Cummings Westlake, LLC, representing Ennis-Tractebel Power Company, comes the closest to providing the appropriate use determination percentage for HRSGs.

The Executive Director is therefore recommending the following modified version of the calculation presented by Cummings Westlake:

> A HRSG acts as a fuel substitute in a combined cycle installation. A typical HRSG captures hot exhaust gases from a combustion turbine. The resulting heat is converted "into high pressure and temperature steam" which is used to propel a steam turbine to generate electrical energy.[34] This process eliminates the need for the additional burning of coal or other hydrocarbon based fuel in order to obtain

[34] Yongjun Zhao, Hongmei Chen, Mark Waters, and Dimitri N. Mavris; "Modeling and Cost Optimization of Combined Cycle Heat Recovery Generator Systems" (Proceedings of ASME Turbo Expo 2003 - Power of Land, Sea, and Air, GT2003-38568, June 16-19, 2003). See also, Application for Use Determinations filed by Ennis-Tractebel Power Company, LP).

the same increase in electrical energy generation output at the site. Installation of a HRSG in a combined cycle facility "allows more electrical energy to be produced for a given heat input" compared to a "simple cycle or traditional steam boiler/turbine (Rankine cycle) configuration."[35] The thermal efficiency increase or production gain derived from the installation of a HRSG is approximately 39%. Since this percentage represents the additional amount of electrical energy produced for a given heat input, it therefore represents the production value of the equipment. Based on this production value, the pollution control percentage of a HRSG installed at a combined-cycle facility is 61%. **Staff is therefore recommending a positive use determination of 61% for the installation of a HRSG in a combined cycle facility.**

Under this method, a HRSG would exit the "Decision Flow Chart" at box 7 and requires the application of "Part B Decision Flow Chart."[36] HRSG provides environmental benefit at the site under box 2 of the Part B Decision Flow Chart by acting as fuel substitute, capturing exhaust gases which would have been emitted into the air at the site, and eliminates the need for the additional burning of hydrocarbon-based fuel to obtain the same increase in electrical energy generation at the site. The HRSGs involved in the instant appeals were installed in order to meet or exceed an environmental rule adopted to control NO_x emissions.[37]

V.

CONCLUSION

The Executive Director requests that the Commission adopt the recommendation of the Executive Director on the proper pollution control percentage for HRSGs installed at combined-cycle facilities. Should the Commission choose to adopt the Executive Director's recommendation, the Executive Director intends to apply the adopted recommendation to all subsequently filed similar use determination applications, and to those applications currently pending adjudication.

[35] Id.
[36] 30 TEX. ADMIN. CODE § 17.15(a); and 30 TEX. ADMIN. CODE § 17.15(b).
[37] See 40 C.F.R § 60.44Da; and 30 TEX. ADMIN. CODE § 106.512.

The Executive Director respectfully requests that the Commission remand use determination numbers 07-1194, 07-11966, 07-11971, 07-11969, 07-11994, and 07-11926, to the Executive Director to issue revised use determinations consistent with the adopted recommendation.

Respectfully submitted,

TEXAS COMMISSION ON ENVIRONMENTAL QUALAITY

Mark R. Vickery, P.G., Executive Director

Stephanie Bergeron Perdue,
Deputy Director Office of Legal Services

Robert Martinez, Director
Environmental Law Division

D. A. Chris Ekoh, Staff Attorney
Environmental Law Division
Texas Bar No. 06507015

Timothy Reidy, Staff Attorney
Environmental Law Division
Texas Bar No. 24058069

P.O. Box 13087, MC 173
Austin, Texas 78711-3087
Telephone No. (512) 239-5487
Facsimile No. (512) 239-0606
REPRESENTING THE EXECUTIVE DIRECTOR, TEXAS COMMISSION ON ENVIRONMENTAL QUALITY

CERTIFICATE OF SERVICE

I certify that on December 3, 2008, the original and 7 copies of the Executive Director's Response to Rusk County, Freestone Central, Hutchinson County, Fort Bend Central, Brazoria County, and Wharton County Appraisal Districts' Appeals of the Executive Director's use determinations was filed with the Office of the Chief Clerk, Texas Commission on Environmental Quality, and was served by first-class mail, agency mail, or facsimile to all persons on the attached mailing list.

D. A. Chris Ekoh, Staff Attorney
Environmental Law Division
Texas Commission on Environmental Quality

TEXAS
COMMISSION
ON ENVIRONMENTAL
QUALITY
2008 DEC -3 PM 4:10
CHIEF CLERKS OFFICE

MAILING LIST
TCEQ Docket Numbers
2008-0830-MIS-U (UD 07-11914/Tenaska Gateway Partners, Ltd – Rusk County)
2008-0831-MIS-U (UD 07-11966/Freestone Power Generation, L.P. – Freestone County)
2008-0832-MIS-U (UD 07-11971/Borger Energy Associates, LP – Hutchinson County)
2008-0849-MIS-U (UD 07-11969/Brazos Valley Energy, L.P. – Fort Bend County)
2008-0850-MIS-U (UD 07-11994/Freeport Energy Center, L.P. – Brazoria County)
2008-0851-MIS-U (UD 07-11926/Navasota Wharton Energy Partners, LP – Wharton County)

Terry W. Decker, RPA/CCA/RTA
Chief Appraiser
Rusk County Appraisal District
P. O. Box 7
Henderson, Texas 75653-0007
903/657-3578 Fax 903/657-9073

David Johnson
Tenaska, Inc.
1044 N. 115th St., Suite 400
Omaha, Nebraska 68154-4446

Bud Black, RPA/CTA
Chief Appraiser
Freestone Central Appraisal District
218 North Mount
Fairfield, Texas 75840
903/389-5510 Fax 903/389-5955

Freestone Power Generation L.P.
717 Texas, Suite 1000
Houston, Texas 77002

Greg Maxim
Duff & Phelps LLC
919 Congress Ave., Suite 1450
Austin, Texas 78701
512/671-5580 Fax 512/671-5501

Pritchard & Abbott, Inc.
Attn: Mr. C. Wayne Frazell
4900 Overton Commons Court
Fort Worth, Texas 76132-3687
817/926-7861 Fax 817/927-5314

Diana Hooks, RPA/RTA
Chief Appraiser
Hutchinson County Appraisal District
P. O. Box 5065
Borger, Texas 79008-5065
806/274-2294 Fax 806/273-3400

Borger Energy Associates, LP
7001 Boulevard 26, Suite 310
North Richland Hills, Texas 76180

Dennis Deegear
Duff & Phelps LLC
919 Congress Ave., Suite 1450
Austin, Texas 78701
512/671-5523 Fax 512/671-5501

Glen Whitehead, RPA
Chief Appraiser
Fort Bend County Central Appraisal District
2801 B. F. Terry Blvd.
Rosenberg, Texas 77471-5600
281/344-8623 Fax 281/344-8632

Brazos Valley Energy, L.P.
717 Texas, Suite 1000
Houston, Texas 77002

Hugh L. Landrum & Associates
Attn: Mr. Hugh L. Lundrum, Jr.
12621 Featherwood, Suite 325
Houston, Texas 77034
281/484-7000 Fax 281/484-7272

Cheryl Evans
Chief Appraiser
Brazoria County Appraisal District
500 North Chenango
Angleton, Texas 77515
979/849-7792 Fax 979/849-7984

Freeport Energy Center, LP
4100 Underwood Road
Pasadena, Texas 77507

Justin Hyland
Leo Scherrer
Calpine/Dow
717 Texas Ave.
Houston, Texas 77002
713/830-8873 Fax 713/830-8670

Tylene Gamble
Chief Appraiser
Wharton County Appraisal District
2407½ N. Richmond Road
Wharton, Texas 77488
979/532-8931 Fax 979/532-5691

Navasota Wharton Energy Partners, LP
403 Corporate Woods
Magnolia, Texas 77354

Stephanie Bergeron Perdue
Deputy Director
TCEQ Office of Legal Services (MC 173)
P. O. Box 13087
Austin, Texas 78711-3087
512/239-0600 Fax 512/239-0606

D. A. Chris Ekoh
TCEQ Environmental Law Division (MC 173)
P. O. Box 13087
Austin, Texas 78711-3087
512/239-5487 Fax 512/239-0606

Tim Reidy
TCEQ Environmental Law Division (MC 173)
P. O. Box 13087
Austin, Texas 78711-3087
512/239-5487 Fax 512/239-0606

Ron Hatlett
TCEQ SBEA (MC 110)
P. O. Box 13087
Austin, Texas 78711-3087
512/239-3100 Fax 512/239-3165

Blas Coy
TCEQ Office of Public Interest Counsel (MC 103)
P. O. Box 13087
Austin, Texas 78711-3087
512/239-6363 Fax 512/239-6377

Docket Clerk
TCEQ Office of the Chief Clerk (MC 105)
P. O. Box 13087
Austin, Texas 78711-3087
512/239-3300 Fax 512/239-3311

Bridget Bohac
TCEQ Office of Public Assistance (MC 108)
P. O. Box 13087
Austin, Texas 78711-3087
512/239-4000 Fax 512/239-4007

Minor Hibbs
TCEQ Chief Engineers Office (MC 168)
P.O. Box 13087
Austin, Texas 78711-3087
512/239-1795 Fax 512/239-1794

Attachment E

Buddy Garcia, *Chairman*
Larry R. Soward, *Commissioner*
Bryan W. Shaw, Ph.D., *Commissioner*
Mark R. Vickery, P.G., *Executive Director*

TEXAS COMMISSION ON ENVIRONMENTAL QUALITY
- CHIEF CLERKS OFFICE
2009 FEB 23 PM 3:34
TEXAS COMMISSION ON ENVIRONMENTAL QUALITY

TEXAS COMMISSION ON ENVIRONMENTAL QUALITY

Protecting Texas by Reducing and Preventing Pollution

February 23, 2009

LaDonna Castañuela, Chief Clerk
TCEQ Office of Chief Clerk MC-105
P.O. Box 13087
Austin, Texas 78711-3087

Re: TCEQ Docket Nos. 2008-0830-MIS-U (UD No. 07-11914/Tenaska Gateway Partners, Ltd.— Rusk County Appraisal District), 2008-0831-MIS-U (UD No. 07-11966/Freestone Power Generation, L.P.— Freestone Central Appraisal District), 2008-0832-MIS-U (UD No. 07-11971/Borger Energy Associates, L.P.— Hutchinson County Appraisal District), 2008-0849-MIS-U (UD No. 07-11969/ Brazos Valley Energy, L.P.— Fort Bend Central Appraisal District), 2008-0850-MIS-U (UD No. 07-11994/Freeport Energy Center, L.P.— Brazoria County Appraisal District), 2008-0851-MIS-U (UD No. 07-11926/Navasota Wharton Energy Partners, L.P.— Wharton County Appraisal District).
Executive Director's Motion for Continuance

Dear Ms. Castañuela:

Enclosed for filing, please find a copy of the *"Executive Director's Motion for Continuance"* regarding the above referenced use determination appeals. If you have any questions, please do not hesitate to contact me at (512) 239-0969.

Sincerely,

Timothy J. Reidy
Staff Attorney
Environmental Law Division

TCEQ Docket Numbers
2008-0830-MIS-U (UD 07-11914/Tenaska Gateway Partners, Ltd. – Rusk County)
2008-0831-MIS-U (UD 07-11966/Freestone Power Generation, L.P. – Freestone County)
2008-0832-MIS-U (UD 07-11971/Borger Energy Associates, L.P. – Hutchinson County)
2008-0849-MIS-U (UD 07-11969/Brazos Valley Energy, L.P. – Fort Bend County)
2008-0850-MIS-U (UD 07-11994/Freeport Energy Center, L.P. – Brazoria County)
2008-0851-MIS-U (UD 07-11926/Navasota Wharton Energy Partners, L.P. – Wharton County)

APPEAL OF THE EXECUTIVE DIRECTOR'S USE DETERMINATIONS ISSUED TO TENASKA GATEWAY PARTNERS, LTD.; FREESTONE POWER GENERATION, L.P.; BORGER ENERGY ASSOCIATES, L.P.; BRAZOS VALLEY ENERGY, L.P.; FREEPORT ENERGY CENTER, L.P.; and NAVASOTA WHARTON ENERGY PARTNERS, L.P.	§	**BEFORE THE TEXAS COMMISSION ON ENVIRONMENTAL QUALITY**

2009 FEB 23 PM 3:35
CHIEF CLERKS OFFICE
TEXAS COMMISSION ON ENVIRONMENTAL QUALITY

EXECUTIVE DIRECTOR'S MOTION FOR CONTINUANCE

TO THE GENERAL COUNSEL OF THE TEXAS COMMISSION ON ENVIRONMENTAL QUALITY:

The Commission is scheduled to consider the above referenced use determination appeals at its February 25, 2009 agenda meeting. The Executive Director respectfully requests that, pursuant to Section 10.4(b) of Title 30 of the Texas Administrative Code, the Commission continue its consideration of these matters to allow the Executive Director more time to evaluate its current recommendation. The Executive Director has conferred with all parties, and none of the parties oppose this motion.

Respectfully submitted,
Texas Commission on Environmental Quality

Mark R. Vickery, P.G.
Executive Director

Robert Martinez, Director
Environmental Law Division

By Tim Reidy
Timothy J. Reidy, Staff Attorney
Environmental Law Division

State Bar No. 24058069
P.O. Box 13087, MC 173
Austin, Texas 78711-3087
(512) 239-0969
REPRESENTING THE EXECUTIVE DIRECTOR OF THE TEXAS COMMISSION ON ENVIRONMENTAL QUALITY

CERTIFICATE OF SERVICE

I certify that on February 23, 2009, a copy of the "Executive Director's Motion for Continuance" was filed with the Texas Commission on Environmental Quality's Office of the Chief Clerk, and was sent by hand delivery, first-class mail, or facsimile to all persons on the attached mailing list.

Timothy J. Reidy, Staff Attorney
Environmental Law Division
State Bar No. 24058069

TEXAS COMMISSION ON ENVIRONMENTAL QUALITY
2009 FEB 23 PM 3:35
CHIEF CLERKS OFFICE

Les Trobman
General Counsel
Texas Commission on Environmental Quality
Office of General Counsel
P.O. Box 13087, MC-101
Austin, Texas 78711-3087
512/239-5500 Fax 512/239-5533

Terry W. Decker, RPA/CCA/RTA
Chief Appraiser
Rusk County Appraisal District
P. O. Box 7
Henderson, Texas 75653-0007
903/657-3578 Fax 903/657-9073

David Johnson
Tenaska, Inc.
1044 N. 115th St., Suite 400
Omaha, Nebraska 68154-4446

Bud Black, RPA/CTA
Chief Appraiser
Freestone Central Appraisal District
218 North Mount
Fairfield, Texas 75840
903/389-5510 Fax 903/389-5955

Freestone Power Generation L.P.
717 Texas, Suite 1000
Houston, Texas 77002

Greg Maxim
Duff & Phelps LLC
919 Congress Ave., Suite 1450
Austin, Texas 78701
512/671-5580 Fax 512/671-5501

Pritchard & Abbott, Inc.
Attn: Mr. C. Wayne Frazell
4900 Overton Commons Court
Fort Worth, Texas 76132-3687
817/926-7861 Fax 817/927-5314

Diana Hooks, RPA/RTA
Chief Appraiser
Hutchinson County Appraisal District
P. O. Box 5065
Borger, Texas 79008-5065
806/274-2294 Fax 806/273-3400

Borger Energy Associates, LP
7001 Boulevard 26, Suite 310
North Richland Hills, Texas 76180

Dennis Deegear
Duff & Phelps LLC
919 Congress Ave., Suite 1450
Austin, Texas 78701
512/671-5523 Fax 512/671-5501

Glen Whitehead, RPA
Chief Appraiser
Fort Bend County Central Appraisal District
2801 B. F. Terry Blvd.
Rosenberg, Texas 77471-5600
281/344-8623 Fax 281/344-8632

Brazos Valley Energy. L.P.
717 Texas, Suite 1000
Houston, Texas 77002

Hugh L. Landrum & Associates
Attn: Mr. Hugh L. Landrum, Jr.
12621 Featherwood, Suite 325
Houston, Texas 77034
281/484-7000 Fax 281/484-7272

Cheryl Evans
Chief Appraiser
Brazoria County Appraisal District
500 North Chenango
Angleton, Texas 77515
979/849-7792 Fax 979/849-7984

Freeport Energy Center, LP
4100 Underwood Road
Pasadena, Texas 77507

Justin Hyland
Leo Scherrer
Calpine/Dow
717 Texas Ave.
Houston, Texas 77002
713/830-8873 Fax 713/830-8670

Tylene Gamble
Chief Appraiser
Wharton County Appraisal District
2407½ N. Richmond Road
Wharton, Texas 77488
979/532-8931 Fax 979/532-5691

Navasota Wharton Energy Partners, LP
403 Corporate Woods
Magnolia, Texas 77354

D. A. Chris Ekoh
TCEQ Environmental Law Division (MC 173)
P. O. Box 13087
Austin, Texas 78711-3087
512/239-5487 Fax 512/239-0606

Tim Reidy
TCEQ Environmental Law Division (MC 173)
P. O. Box 13087
Austin, Texas 78711-3087
512/239-5487 Fax 512/239-0606

Ron Hatlett
TCEQ Chief Engineers Office (MC 110)
P. O. Box 13087
Austin, Texas 78711-3087
512/239-3100 Fax 512/239-3165

Blas Coy
TCEQ Office of Public Interest Counsel (MC 103)
P. O. Box 13087
Austin, Texas 78711-3087
512/239-6363 Fax 512/239-6377

Docket Clerk
TCEQ Office of the Chief Clerk (MC 105)
P. O. Box 13087
Austin, Texas 78711-3087
512/239-3300 Fax 512/239-3311

Bridget Bohac
512/239-1795 Fax 512/239-1794
TCEQ Office of Public Assistance (MC 108)
P. O. Box 13087
Austin, Texas 78711-3087
512/239-4000 Fax 512/239-4007
Minor Hibbs

TCEQ Chief Engineers Office (MC 168)
P.O. Box 13087
Austin, Texas 78711-3087
512/239-6590 Fax 512-239-1794

Attachment F

Buddy Garcia, *Chairman*
Larry R. Soward, *Commissioner*
Bryan W. Shaw, Ph.D., *Commissioner*
Mark R. Vickery, P.G., *Executive Director*

TEXAS
COMMISSION
ON ENVIRONMENTAL
QUALITY

2009 FEB 23 PM 4:41

CHIEF CLERKS OFFICE

TEXAS COMMISSION ON ENVIRONMENTAL QUALITY

Protecting Texas by Reducing and Preventing Pollution

February 23, 2009

To: Persons on the attached Mailing List (By mail, and facsimile as indicated)

Re: Appeals of the Executive Director's Use Determinations regarding Tenaska Gateway Partners, Ltd. (Rusk County), Freestone Power Generation LP (Freestone County), Borger Energy Associates, LP (Hutchinson County), Brazos Valley Energy L.P. (Fort Bend County), Freeport Energy Center, L.P. (Brazoria County), and Navasota Wharton Energy Partners LP (Wharton County), TCEQ Use Determination Nos. 07-11914, 07-11966, 07-11971, 07-11969, 07-11994 and 07-11926; TCEQ Docket Nos. 2008-0830-MIS-U, 2008-0831-MIS-U, 2008-0832-MIS-U, 2008-0849-MIS-U, 2008-0850-MIS-U, and 2008-0851-MIS-U

The above-named matters are currently scheduled to be considered by the Texas Commission on Environmental Quality ("TCEQ") at its February 25, 2009, public meeting. The TCEQ Executive Director (ED) filed a *Motion for Continuance* (ED's Motion) on February 23, 2009. The ED's Motion asks that the Commission continue its consideration of these above-named matters to allow the ED more time to evaluate its current recommendation. The ED states that none of the parties oppose the ED's Motion.

Pursuant to the ED's Motion, the Office of General Counsel has determined to continue the matter from the February 25, 2009 meeting. Accordingly, this matter is continued indefinitely pursuant to 30 TAC § 10.4. The Office of General Counsel will notify the parties by subsequent letter of the future agenda setting and any associated filing deadlines.

If you have any questions regarding this matter, please contact John Sedberry, Assistant General Counsel, at 512-239-6575.

Respectfully,

Les Trobman
General Counsel

Mailing List

Mailing List

Tenaska Gateway Partners, Ltd. (Rusk County), Freestone Power Generation LP (Freestone County), Borger Energy Associates, LP (Hutchinson County), Brazos Valley Energy L.P. (Fort Bend County), Freeport Energy Center, L.P. (Brazoria County), and Navasota Wharton Energy Partners LP (Wharton County)
TCEQ Docket Nos. 2008-0830-MIS-U, 2008-0831-MIS-U, 2008-0832-MIS-U, 2008-0849-MIS-U, 2008-0850-MIS-U, and 2008-0851-MIS-U

Diana Hooks, RPA/RTA
Chief Appraiser
Hutchinson County Appraisal District
P.O. Box 5065
Borger, Texas 79008-5065
806/274-2294 FAX806/273-3400

Borger Energy Associates, LP
7001 Boulevard 26, Suite 310
North Richland Hills, Texas 76180

Dennis Deegear
Duff and Phelps LLC
919 Congress Ave., Suite 1450
Austin, Texas 78701
512/671-5523 FAX 512/671-5501

Pritchard & Abbott, Inc.
Attn: Mr. C. Wayne Frazell
4900 Overton Commons Court
Fort Worth, Texas 76132-3687
817/926-7861 FAX 817/927-5314

Glen Whitehead, RPA
Chief Appraiser
Fort Bend County Appraisal District
2801 B. F. Terry Blvd.
Rosenberg, Texas 77471-5600
281/344-8623 FAX 281/344-8632

Brazos Valley Energy L.P.
717 Texas, Suite 1000
Houston, Texas 77002

Greg Maxim
Duff and Phelps LLC
919 Congress Ave., Suite 1450
Austin, Texas 78701
512/671-5580 FAX 512/671-5501

Hugh L. Landrum & Associates, Inc.
Attn: Mr. Hugh L. Landrum Jr.
12621 Featherwood Drive, Suite 325
Houston, Texas 77034
281/484-7000 FAX 281/484-7272

Cheryl Evans
Chief Appraiser
Brazoria County Appraisal District
500 North Chenango
Angleton, Texas 77515
979/849-7792 FAX 979/849-7984

Freeport Energy Center, LP
4100 Underwood Road
Pasedena, Texas 77507

Justin Hyland
Leo Scherrer
Calpine Corporation/Dow
717 Texas Ave. Suite 1000
Houston, Texas 77002
713/830-8873 FAX 832/325-0934

Bud Black, RPA/CTA
Chief Appraiser
Freestone Central Appraisal District
218 North Mount
Fairfield, Texas 75840
903/389-5510 FAX 903/389-5955

Freestone Power Generation L.P.
717 Texas, Suite 1000
Houston, Texas 77002

Tylene Gamble
Chief Appraiser
Wharton County Appraisal District
2407 ½ N. Richmond Road
Wharton, Texas 77488
979/532-8931 FAX 979/532-5691

Navasota Wharton Energy Partners LP
403 Corporate Woods
Magnolia, Texas 77354

Terry W. Decker, RPA/CCA/RTA
Chief Appraiser
Rusk County Appraisal District
P.O. Box 7
Henderson, Texas 75653-0007
903/657-3578 FAX 903/657-9073

David D. Johnson
Tenaska, Inc.
1044 N. 115th St., Suite 400
Omaha, Nebraska 68154-4446
402/691-9500 FAX 402/691-9526

Tenaska Gateway Partners, Ltd.
Attn: Mr. Jerry K. Crouse, CFO
1044 N. 115th St., Suite 400
Omaha, Nebraska 68154-4446
402/691-9500 FAX 402/691-9526

Stephanie Bergeron Perdue
TCEQ Environmental Law Division MC 173
P.O. Box 13087
Austin, Texas 78711-3087
512/239-0600 FAX 512/239-0606

Chris Ekoh
TCEQ Environmental Law Division MC 173
P.O. Box 13087
Austin, Texas 78711-3087
512/239-0600 FAX 512/239-0606

Ron Hatlett
TCEQ Small Business & Environmental
Assistance Division MC 110
P.O. Box 13087
Austin, Texas 78711-3087
512/239-3100 FAX 512/239-5675

Blas Coy
TCEQ Office of Public Interest Counsel
MC 103
P.O. Box 13087
Austin, Texas 78711-3087
512/239-6363 FAX 512/239-6377

Docket Clerk
TCEQ Office of Chief Clerk MC 105
P.O. Box 13087
Austin, Texas 78711-3087
512/239-3300 FAX 512/239-3311

Bridget Bohac
TCEQ Office of Public Assistance MC 108
P.O. Box 13087
Austin, Texas 78711-3087
512/239-4000 FAX 512/239-4007

David S. Schanbacher
TCEQ Chief Engineer's Office (MC 168)
P.O. Box 13087
Austin, Texas 78711-3087
512/239-6590 FAX 512/239-1794

Attachment G

TCEQ Docket Numbers
2008-0830-MIS-U (UD 07-11914/Tenaska Gateway Partners, Ltd – Rusk County)
2008-0831-MIS-U (UD 07-11966/Freestone Power Generation, L.P. – Freestone County)
2008-0832-MIS-U (UD 07-11971/Borger Energy Associates, L.P. – Hutchinson County)
2008-0849-MIS-U (UD 07-11969/Brazos Valley Energy, L.P. – Fort Bend County)
2008-0850-MIS-U (UD 07-11994/Freeport Energy Center, L.P. – Brazoria County)
2008-0851-MIS-U (UD 07-11926/Navasota Wharton Energy Partners, L.P. – Wharton County)

Appeal of Executive Director's Use	§	Before the
Determination Issue to	§	
Tenaska Gateway Partners, Ltd;	§	Texas Commission
Freestone Power Generation, L.P.;	§	
Borger Energy Associates, L.P.;	§	on
Brazos Valley Energy, L.P.;	§	
Freeport Energy Center, L.P.; and	§	
Navasota Wharton Energy Partners, L.P	§	Environmental Quality

Executive Director's Request for Remand of Applications Submitted by Tenaska Gateway Partners, Ltd; Freestone Power Generation, L.P.; Borger Energy Associates, L.P.; Brazos Valley Energy, L.P.; Freeport Energy Center, L.P.; and Navasota Wharton Energy Partners, L.P.

Pursuant to 30 TAC § 17.25(d), the Executive Director of the Texas Commission on Environmental Quality requests that the General Council remand the above listed applications for further processing.

Respectfully submitted,

Texas Commission on Environmental Quality

Zak Covar
Executive Director

Caroline Sweeney, Deputy Director
Office of Legal Services

Robert Martinez, Director
Environmental Law Division

Daniel Long

Daniel Long, Staff Attorney
Environmental Law Division
State Bar No. 24032679
P.O. Box 13087, MC 173
Austin, Texas 78711-3087
(512) 239-5373
(512) 239-0606

CERTIFICATE OF SERVICE

I certify that on June 18, 2012, the original and 7 copies of the Executive Director's Request for Remand of Applications Submitted by Tenaska Gateway Partners, Ltd; Freestone Power Generation, L.P.; Borger Energy Associates, L.P.; Brazos Valley Energy, L.P.; Freeport Energy Center, L.P.; and Navasota Wharton Energy Partners, L.P. was filed with the Office of the Chief Clerk, Texas Commission on Environmental Quality, and was served by first-class mail, agency mail, electronic mail, or facsimile to all persons on the attached mailing list.

Daniel Long

Daniel Long, Staff Attorney
Environmental Law Division
Texas Commission on Environmental Quality

Mailing List
TCEQ Docket Numbers
2008-0830-MIS-U (UD 07-11914/Tenaska Gateway Partners, Ltd – Rusk County)
2008-0831-MIS-U (UD 07-11966/Freestone Power Generation, L.P. – Freestone County)
2008-0832-MIS-U (UD 07-11971/Borger Energy Associates, L.P. – Hutchinson County)
2008-0849-MIS-U (UD 07-11969/Brazos Valley Energy, L.P. – Fort Bend County)
2008-0850-MIS-U (UD 07-11994/Freeport Energy Center, L.P. – Brazoria County)
2008-0851-MIS-U (UD 07-11926/Navasota Wharton Energy Partners, L.P. – Wharton County)

Appraisal Districts

Terry W. Decker, RRP/CTA
Chief Appraiser
Rusk County Appraisal District
P. O. Box 7
Henderson, Texas 75653-0007
903/657-3578 Fax 903/657-9073
tdecker@ ruskcad.org

Bud Black, RPA/CTA
Chief Appraiser
Freestone Central Appraisal District
218 North Mount Street
Fairfield, Texas 75840
903/389-5510 Fax 903/389-5955
general.info@freestoncad.org

Diana Hooks, RPA/RTA
Chief Appraiser
Hutchinson County Appraisal District
P. O. Box 5065
Borger, Texas 79008-5065
806/274-2294 Fax 806/273-3400
hcad3@amaonline.com

Glen Whitehead, RPA
Chief Appraiser
Fort Bend County Central Appraisal District
2801 B. F. Terry Blvd.
Rosenberg, Texas 77471-5600
281/344-8623 Fax 281/762-9666
Glenwhitehead@fbcad.org

Cheryl Evans
Chief Appraiser
Brazoria County Appraisal District
500 North Chenango Street
Angleton, Texas 77515
979/849-7792 Fax 979/849-7984
bcad@brazoriacad.org

Tylene Gamble
Chief Appraiser
Wharton County Appraisal District
308 East Milam Street
Wharton, Texas 77488-4918
979/532-8931 Fax 979/532-5691
whartoncad@sbcglobal.net

Pritchard & Abbott, Inc.
Attn: Mr. C. Wayne Frazell
4900 Overton Commons Court
Fort Worth, Texas 76132-3687
817/926-7861 Fax 817/927-5314
wfrazell@pandai.com

Applicants:

David D. Johnson
Tenaska Gateway Partners, Ltd.
1044 N 115th St. Suite 400
Omaha, Nebraska 68154-4446
402/691-9500 Fax 402/691-9226

Freestone Power Generation, L.P.
717 Texas, Suite 1000
Houston, Texas 77002

Borger Energy Associates, L.P.
7001 Boulevard 26, Suite 310
North Richland Hills, Texas 76180

Brazos Valley Energy, L.P.
717 Texas, Suite 1000
Houston, Texas 77002

Freeport Energy Center, L.P.
4100 Underwood Road
Pasadena, Texas 77507

Navasota Wharton Energy Partners LP
403 Corporate Woods
Magnolia, Texas 77354

Greg Maxim
Dennis Deegear
Duff & Phelps LLC
919 Congress Ave., Suite 1450
Austin, Texas 78701
512/671-5580 Fax 512/671-5501
gregory.maxim@duffandphelps.com
dennis.deegar@duffandphelps.com

Justin Hyland
Leo Scherrer
717 Texas Avenue
Houston, Texas 77002
713/830-8873 Fax 713/830-8670
hylandj@calpine.com
lscherrer@dow.com

Hugh L. Landrum & Associates
Attn: Mr. Hugh L. Landrum, Jr.
12621 Featherwood, Suite 325
Houston, Texas 77034
281/484-7000 Fax 281/484-7272
hughjr@hughlandrum.com

Commission:

Blas Coy
TCEQ Office of Public Interest Counsel (MC 103)
P. O. Box 13087
Austin, Texas 78711-3087
512/239-6363 Fax 512/239-6377

Docket Clerk
TCEQ Office of the Chief Clerk (MC 105)
P. O. Box 13087
Austin, Texas 78711-3087
512/239-3300 Fax 512/239-3311

Attachment H

Bryan W. Shaw, Ph.D., *Chairman*
Carlos Rubinstein, *Commissioner*
Toby Baker, *Commissioner*
Zak Covar, *Executive Director*

TEXAS COMMISSION ON ENVIRONMENTAL QUALITY

Protecting Texas by Reducing and Preventing Pollution

June 29, 2012

To: Persons on the attached service list (by mail and facsimile as indicated)

Re: Request for remand of Prop 2 Use Determination Application Nos. 07-11914, 07-11966, 07-11971, 07-11969, 07-11994, and 07-11926 submitted under TCEQ Docket Nos. 2008-0830-MIS-U; 2008-0831-MIS-U; 2008-0832-MIS-U; 2008-0849-MIS-U; 2008-0850-MIS-U; and 2008-0851-MIS-U.

On June 18, 2012, the Executive Director (ED) filed a request (served on each of the parties for the respective use determination appeals) under 30 TAC § 17.25(d) for remand of the following use determination applications for further processing:

- Application No. 07-11914, Tenaska Gateway Partners, Ltd, Rusk County (TCEQ Docket No. 2008-0830-MIS-U);
- Application No. 07-11966, Freestone Power Generation, L.P., Freestone County (TCEQ Docket No. 2008-0831-MIS-U);
- Application No. 07-11971, Borger Energy Associates, L.P., Hutchinson County (TCEQ Docket No. 2008-0832-MIS-U);
- Application No. 07-11969, Brazos Valley Energy Center, L.P., Fort Bend County (TCEQ Docket No. 2008-0849-MIS-U);
- Application No. 07-11994, Freeport Energy Center, L.P., Brazoria County (TCEQ Docket No. 2008-0850-MIS-U); and
- Application No. 07-11926, Navasota Wharton Energy Partners, L.P., Wharton County (TCEQ Docket No. 2008-0851-MIS-U).

Section 17.25(d) provides that "the general counsel may remand a matter from the commission's agenda to the executive director if the executive director ... requests a remand." Pursuant to 30 TAC § 17.25(d), this letter grants the ED's request to remand the above-listed applications to the ED for further processing. The General Counsel notes that any revised use determination that may subsequently be issued by the ED will be subject to the appeals process set forth in § 17.25 of the Commission's rules.

If you have any questions about this matter, please contact Jim Rizk, Assistant General Counsel, at 512/239-5530.

Very truly yours,

Les Trobman
General Counsel

Mailing List

Mailing List
Prop 2 Use Determination Application
Nos. 07-11914, 07-11966, 07-11971, 07-11969, 07-11994, and 07-11926
TCEQ Docket Nos. 2008-0830-MIS-U; 2008-0831-MIS-U; 2008-0832-MIS-U;
2008-0849-MIS-U; 2008-0850-MIS-U; and 2008-0851-MIS-U

Terry W. Decker, RRP/CTA/RTA
Chief Appraiser
Rusk County Appraisal District
P.O. Box 7
Henderson, Texas 75653-0007
903/657-3578 FAX 903/657-9073
tdecker@ruskcad.org

Bud Black, RPA/CTA
Chief Appraiser
Freestone Central Appraisal District
218 North Mount Street
Fairfield, Texas 75840
903/389-5510 FAX 903/389-5955
general.info@freestoncad.org

Diana Hooks, RPA/RTA
Chief Appraiser
Hutchinson County Appraisal District
P.O. Box 5065
Borger, Texas 79008-5065
806/274-2294 FAX 806/273-3400
hcad3@amaonline.com

Glen Whitehead, RPA
Chief Appraiser
Fort Bend County Central Appraisal District
2801 B. F. Terry Blvd.
Rosenberg, Texas 77471-5600
281/344-8623 FAX 281/762-9666
glenwhitehead@fbcad.org

Cheryl Evans
Chief Appraiser
Brazoria County Appraisal District
500 North Chenango Street
Angleton, Texas 77515
979/849-7792 FAX 979/849-7984
bcad@brazoriacad.org

Tylene Gamble
Chief Appraiser
Wharton County Appraisal District
308 East Milam Street
Wharton, Texas 77488-4918
979/532-8931 FAX 979/532-5691
whartoncad@sbcglobal.net

Pritchard & Abbott, Inc.
Attn: Mr. C. Wayne Frazell
4900 Overton Commons Court
Fort Worth, Texas 76132-3687
817/926-7861 FAX 817/927-5314
wfrazell@pandai.com

David D. Johnson
Tenaska Gateway Partners, Ltd.
1044 N 115th St., Suite 400
Omaha, Nebraska 68154-4446
402/691-9500 FAX 402/691-9226

Freestone Power Generation, L.P.
717 Texas, Suite 1000
Houston, Texas 77002

Borger Energy Associates, L.P.
7001 Boulevard 26, Suite 310
North Richland Hills, Texas 76180

Brazos Valley Energy, L.P.
717 Texas, Suite 1000
Houston, Texas 77002

Freeport Energy Center, L.P.
4100 Underwood Road
Pasadena, Texas 77507

Navasota Wharton Energy Partners LP
403 Corporate Woods
Magnolia, Texas 77354

Greg Maxim
Dennis Deegear
Duff & Phelps LLC
919 Congress Ave., Suite 1450
Austin, Texas 78701
512/671-5580 FAX 512/671-5501
gregrory.maxim@duffandphelps.com
dennis.deegar@duffandphelps.com

Justin Hyland
Leo Scherrer
717 Texas Avenue
Houston, Texas 77002
713/830-8873 FAX 713/830-8670
hylandj@calpine.com
lscherrer@dow.com

Hugh L. Landrum & Associates
Attn: Mr. Hugh L. Landrum, Jr.
12621 Featherwood, Suite 325
Houston, Texas 77034
281/484-7000 FAX 281/484-7272
hughjr@hughlandrum.com

Daniel Long
TCEQ Environmental Law Division MC 173
P.O. Box 13087
Austin, Texas 78711-3087
512/239-0600 FAX 512/239-0606

Susana M. Hildebrand, P.E.
TCEQ Chief Engineer's Office MC 168
P.O. Box 13087
Austin, Texas 78711-3087
512/239-4900 FAX 512/239-6188

Chance Goodin
TCEQ Chief Engineer's Office MC 206
P.O. Box 13087
Austin, Texas 78711-3087
512/239-6335 FAX 512/239-6188

Robert Martinez
TCEQ Environmental Law Division MC 173
P.O. Box 13087
Austin, Texas 78711-3087
512/239-0600 FAX 512/239-0606

Blas Coy
TCEQ Office of Public Interest Counsel MC 103
P.O. Box 13087
Austin, Texas 78711-3087
512/239-6363 FAX 512/239-6377

Docket Clerk
TCEQ Office of Chief Clerk MC 105
P.O. Box 13087
Austin, Texas 78711-3087
512/239-3300 FAX 512/239-3311

Attachment I

TCEQ DOCKET NO. 2008-0851-MIS-U

APPEAL OF THE EXECUTIVE DIRECTOR'S POSITIVE USE DETERMINATION ISSUED TO NAVASOTA WHARTON ENERGY PARTNERS LP (07-11926)	§ § § § §	TEXAS COMMISSION ON ENVIRONMENTAL QUALITY

APPLICANT CER-COLORADO BEND ENERGY LLC'S REQUEST FOR REVERSAL OF THE REMAND OF THE POSITIVE USE DETERMINATION ISSUED TO NAVASOTA WHARTON ENERGY PARTNERS LP

CER-Colorado Bend Energy LLC (formerly known as Navasota Wharton Energy Partners LP) ("Applicant") files this Request for Reversal of the Texas Commission on Environmental Quality ("TCEQ" or "Commission") General Counsel's June 29, 2012 remand of the positive use determination issued by the Executive Director to the Applicant on May 1, 2008. For the reasons articulated below, the Applicant respectfully requests that the Commission reverse the General Counsel's decision to remand the May 1, 2008 positive use determination to the Executive Director and take up for the first time the previously pending appeal of that Positive Use Determination consistent with the requirements of Section 11.31(e) of the Texas Tax Code

Part I of this brief provides a short background of the Pollution Control Property Program; Part II illustrates the irregular procedural background of the application and subsequent appeal; and Part III details the Applicant's argument why the General Counsel's remand of the matter was not lawful under the applicable provisions of the Texas Tax Code. To preserve its rights under applicable law, Applicant is filing under separate cover an appeal of the Negative Use Determination sent on July 10, 2012. However, because Applicant believes that its prior positive use determination was not properly disposed of on appeal, we file this Request for Reversal.

I. Program Background

On November 2, 1993, Texans approved Proposition 2 amending the Texas Constitution to provide tax relief for pollution control property. This amendment added §1-l to the Texas Constitution, Article VIII, which states:

> (a) The legislature by general law may exempt from ad valorem taxation all or part of real and personal property used, constructed, acquired, or installed wholly or partly to meet or exceed rules or regulations adopted by any environmental protection agency of the United States, this state, or a political subdivision of this state for the prevention, monitoring, control, or reduction of air, water, or land pollution.

(b) This section applies to real and personal property used as a facility, device, or method for the control of air, water, or land pollution that would otherwise be taxable for the first time on or after January 1, 1994.

In response to the constitutional amendment, the Texas Legislature added Texas Tax Code, §11.31, Pollution Control Property ("§11.31"). The statute establishes a process where applicants submit Applications for Use Determination to the Executive Director of the TCEQ to determine whether the property is used wholly or in part for pollution control. The Executive Director's role is limited by § 11.31 to the specific task of conducting a technical evaluation to determine whether the equipment is used wholly or partly for the control of air, water, or land pollution, and does not include any evaluation of the merit of the tax exemption itself or tax policy implications of granting positive or negative use determinations.

In 2001, the Legislature passed House Bill 3121, which amended §11.31. These amendments included providing a process for appealing the Executive Director's use determinations. House Bill 3121 also required the Commission to adopt rules that establish specific standards for the review of applications that ensure determinations are equal and uniform, and to adopt rules to distinguish the proportion of property that is used to control pollution from the proportion that is used to produce goods or services.

In 2007, §11.31 was amended again with the passage of House Bill 3732, which required the Commission to adopt a list of equipment that is considered pollution control property, including the equipment listed in §11.31(k). In adopting rules for the implementation of House Bill 3732, the TCEQ created a Tier IV application for the categories of listed equipment. For Tier IV applications, the Executive Director must determine the proportion of the equipment used for pollution control and the proportion that is used for production. The application that is the subject of this appeal is a Tier IV application.

II. Brief Procedural Background

On March 19, 2008, the Applicant filed a Tier IV Application for Use Determination for Pollution Control Property with the Executive Director for four Heat Recovery Steam Generators ("HRSGs") and two steam turbines (See Attachment A). The Executive Director conducted a technical review of the application and on May 1, 2008 issued a 100 percent positive use determination for the four HRSGs, stating that "[t]his equipment is considered to be pollution control equipment and was installed to meet or exceed federal or state regulations." (See Attachment B). Subsequently, on May 19, 2008, Wharton County Appraisal District filed an appeal of the Executive Director's use determination, claiming that the HRSGs "are production equipment in that they burn natural gas to create steam to generate electricity." (See Attachment C).

The Executive Director has received approximately thirty-eight similar applications for HRSGs and steam turbines installed at combined-cycle electric generation facilities. The Executive Director issued 100 percent positive use determinations for twenty-six of the HRSG applications. Of the twenty-six positive use determinations, six were appealed by appraisal districts.

The appeal of the May 1, 2008 positive use determination and the five other similarly situated positive use determinations were scheduled to appear on the Commission's Agenda to be held on February 25, 2009. However, on February 23, 2009, two days prior to the Agenda, the Executive Director filed with the TCEQ's General Counsel a Motion for Continuance to "allow the Executive Director more time to evaluate its current recommendation." (See Attachment D). In response to the Executive Director's motion, the General Counsel chose to continue the matter "indefinitely." (See Attachment E).

On June 18, 2012, almost three and a half years after the Commission indefinitely continued the matter on its Agenda, the Executive Director requested that the General Counsel remand the six appealed used determinations back to the Executive Director for "further processing." (See Attachment F). On June 29, 2012, before the Commission had taken up the original appeal of the positive use determination, the General Counsel remanded the matter back to the Executive Director. (See Attachment G). In less than two weeks, on July 10, 2012, the Executive Director issued a new use determination, stating that "[h]eat recovery steam generators are used solely for production and, therefore, are not eligible for a positive use determination." (See Attachment H).

III. Basis for Reversal of Remand

1. The General Counsel's Remand of the Use Determination is a Violation of the Statutory Provisions of Texas Tax Code § 11.31.

Texas Tax Code § 11.31(e) outlines a unique appeals process for a person challenging use determinations made by the TCEQ's Executive Director. This appeals process is unlike any other procedure for appealing a TCEQ decision and includes a specific sequence of administrative steps the agency must follow in considering and processing those appeals. After describing the requirements for filing an appeal, Section 11.31(e) states that "[t]he commission shall consider the appeal at the next regularly scheduled meeting of the commission for which adequate notice may be given." (emphasis added). This section is unambiguous and leaves no doubt that the Commission must consider any use determinations made by the Executive Director at the next possible Agenda, unless adequate notice of the appeal cannot be given. The Commission's rules also state that the Chief Clerk "shall schedule the appeal for consideration at the next regularly scheduled commission meeting for which adequate notice can be given." (30 TAC §17.25(c)(3)).

Section 11.31(e) adds that "[t]he Commission may remand the matter to the executive director for a new determination or deny the appeal and affirm the executive director's determination." Thus the Commission is not only required to consider the matter at the next Agenda meeting, but the Commission must vote to determine whether to affirm the appeal and remand the matter to the Executive Director or deny the appeal and affirm the original use determination. These two courses of action are the only two the Commission may take and the statute does allow for either of them to be delegated to the General Counsel.

The General Counsel's letter remanding the matter back to the Executive Director indicates that it is authorized to remand the letter to the Executive Director under 30 TAC §

17.25(d). Such an application of Section 17.25(d) in this case contradicts the plain language of the Texas Tax Code.

It is evident that there is a direct conflict between the provisions of Texas Tax Code § 11.31(e) and the General Counsel's use of 30 TAC § 17.25(d) in this case. One undisputed premise of administrative law is that a rule promulgated by a state agency must be consistent with the statutory provisions authorizing the agency to adopt rules to implement the statute. Under Texas Tax Code § 11.31(e), there is only one possible way that a use determination can be remanded back to the Executive Director after an appeal - the Commission must consider the matter at an Agenda meeting and vote to either 1) deny the appeal and approve the use determination or 2) remand the matter to the Executive Director.

The General Counse relied on Section 17.25(d) to remand the May 1, 2008 use determination to the Executive Director upon the Executive Director's request without any process before the Commissioners. This functionally made the General Counsel, instead of the Commissioners, the arbiter of whether Wharton County Appraisal District's appeal was granted. Just as it would have been inappropriate for the General Counsel to deny that appeal, it was inappropriate for him to grant it, which is what he did when he remanded the May 1, 2008 positive use determination.

2. By Remanding the Use Determination Under 30 TAC 17.25(d), the General Counsel Retroactively Applied an Agency Rule to an Application that was Submitted Before 30 TAC § 17.25(d) was Adopted.

As discussed above, the Tax Code mandates that the Commissioners, not the General Counsel, act on pending appeals of use determinations. However, even if 30 TAC § 17.25(d) could be applied as the General Counsel applied it here without violating the Tax Code, the General Counsel's reliance on the rule is an impermissible retroactive application of a rule that impacts substantive rights.

30 TAC § 17.25(d) was not adopted until December 13, 2010. Thus, the section of the Administrative Code upon which the General Counsel relies upon in support of the June 29 Remand was not effective until after Navasota submitted its Application for Use Determination, after the Executive Director issued its 100 percent use determination, and after the Wharton County Appraisal District appealed that use determination. In fact, Section 17.25(d) was not added to the Administrative Code until after the General Counsel indefinitely continued the matter before the Commission.

Under Texas law, the retroactive application of statutes and rules is strongly disfavored. Article 1, Section 16 of the Texas Constitution specifically prohibits retroactive laws. Texas Government Code § 311.022 states that a "statute is presumed to be prospective in its operation unless expressly made retrospective." The same general principles apply for agency rules.[1]

[1] *See R.R. Comm'n v. Lone Star Gas Co.*, 656 S.W.2d 421, 425 (Tex. 1983).

Although the retroactive application of rules is considered permissible under Texas law when only procedural rights are affected, much more is at stake here. In this case, the Applicant is entitled to a statutorily-mandated process that is designed to protect substantive rights stemming from the underlying use determination. The financial consequences of losing a positive use determination are significant, especially on equipment as valuable as involved in this case. Rather than being able to financially plan based on a timely disposition of the May 19, 2008 appeal, Applicant was left in limbo for over four years and then, in a matter of a few days, was stripped of its 100 percent positive use determination and handed a complete reversal without any involvement of the one body the Tax Code charges with ruling on appeals - the Commissioners. The effect of the retroactive application of this so-called procedural rule is far too substantive to withstand scrutiny.

IV. Conclusion

Based on the reasons articulated above, the General Counsel's decision to remand the May 1, 2008 positive use determination violated Texas Tax Code § 11.31. The Tax Code requires the Commission to consider appeals of use determinations and does not permit them to delegate that important role to the General Counsel. The rule relied upon by the General Counsel to justify the June 29, 2012 remand not only conflicts with the Tax Code, but cannot be retroactively applied in the manner proposed given the substantive impact of that application. Applicant request that the Remand be reversed and for the Commission to consider the original positive use determination as required by the Tax Code.

Respectfully submitted,

Michael J. Nasi
State Bar No. 00791335
Steve Moore
State Bar No. 14377320
Benjamin Rhem
State Bar No. 24065967

JACKSON WALKER L.L.P.
100 Congress Avenue, Suite 1100
Austin, Texas 78701
512-236-2200
512-236-2002 (Facsimile)
mnasi@jw.com

ATTORNEYS FOR CER-COLORADO BEND ENERGY LLC

CERTIFICATE OF SERVICE

I hereby certify that on the 31st day of July, 2012, a copy of the foregoing was provided by hand delivery, electronic mail or U.S. First Class Mail to the attached mailing list:

for Michael J. Nasi

Mailing List
Prop 2 Use Determination Application No. 07-11926
TCEQ Docket No. 2008-0851-MIS-U

Tylene Gamble
Chief Appraiser
Wharton County Appraisal District
308 East Milam Street
Wharton, Texas 77488-4918
979/532-8931 FAX 979/532-5691
whartoncad@sbcglobal.net

Greg Maxim
Dennie Deegear
Duff & Phelps, LLC
919 Congress Avenue, Suite 1450
Austin, Texas 78701
512/671-5580 Fax 512/671-5501
Gregory.maxim@duffandphelps.com
dennis.deegar@duffandphelps.com

Daniel Long
Texas Environmental Law Division MC 173
P. O. Box 13087
Austin, Texas 78711-3087
512/239-0600 FAX 512/239-0606

Susana M. Hildebrand, P.E.
TCEQ Chief Engineer's Office MC 168
P. O. Box 13087
Austin, Texas 78711-3087
512/239-4900 FAX 512/239-6188

Chance Goodin
TCEQ Chief Engineer's Office MC 206
P. O. Box 13087
Austin, Texas 78711-3087
512/239-6336 FAX 512/239-6188

Robert Martinez
TCEQ Environmental Law Division MC 173
P. O. Box 13087
Austin, Texas 78711-3087
512/239-0600 FAX 512/239-0606

Blas Coy
TCEQ Office of Public Interest Counsel
MC 103
P. O. Box 13087
Austin, Texas 78711-3087
512/239-6363 FAX 512/239-6377

Docket Clerk
TCEQ Office of Chief Clerk MC 105
P. O. Box 13087
Austin, Texas 78711-3087
512/239-3300 FAX 512/239-3311

Attachment A

TEXAS COMMISSION ON ENVIRONMENTAL QUALITY
APPLICATION FOR USE DETERMINATION
FOR POLLUTION CONTROL PROPERTY

The TCEQ has the responsibility to determine whether a property is a pollution control property. A person seeking a use determination for pollution control property must complete the attached application or use a copy or similar reproduction. For assistance in completing this form refer to the TCEQ guidelines document, *Property Tax Exemptions for Pollution Control Property*, as well as 30 TAC §17, rules governing this program. For additional assistance please contact the Tax Relief for Pollution Control Property Program at (512) 239-3100. The application should be completed and mailed, along with a complete copy and appropriate fee, to: TCEQ MC-214, Cashiers Office; P.O. Box 13088, Austin, Texas 78711-3088.

1. GENERAL INFORMATION

A. What is the type of ownership of this facility?

- ☐ Corporation
- ☐ Sole Proprietor
- ☐ Partnership
- ☐ Utility
- ☑ Limited Partnership
- ☐ Other

B. Size of company: Number of Employees

- ☑ 1 to 99
- ☐ 1,000 to 1,999
- ☐ 100 to 499
- ☐ 2,000 to 4,999
- ☐ 500 to 999
- ☐ 5,000 or more

C. Business Description: **Electricity Manufacturing (SIC 4911)**

2. TYPE OF APPLICATION

- ☐ **Tier I $150 Application Fee**
- ☐ **Tier II $1,000 Application Fee**
- ☐ **Tier III $2,500 Application Fee**
- ☑ **Tier IV $500 Application Fee**

NOTE: Enclose a check, money order to the TCEQ, or a copy of the ePay receipt along with the applicaton to cover the required fee.

3. NAME OF APPLICANT

A. Company Name: Navasota Wharton Energy Partners LP

B. Mailing Address (Street or P.O. Box): 403 Corporate Woods

C. City, State, ZIP: Magnolia, TX 77354

4. PHYSICAL LOCATION OF PROPERTY REQUESTING A TAX EXEMPTION

A. Name of facility: Colorado Bend

B. Type of Mfg Process or Service: Electricity Manufacturing (SIC 4911)

C. Street Address: 3821 S. State Hwy 60

D. City, State, ZIP: Wharton, TX 77488

E. Tracking Number Assigned by Applicant: DPCOBend B

F. Customer Number or Regulated Entity Number: N/A

5. APPRAISAL DISTRICT WITH TAXING AUTHORITY OVER PROPERTY

A. Name of Appraisal District: Wharton

B. Appraisal District Account Number: 10258-000-000-00; 10-20500000-0200-67099; 20063-000-055-00

Replacement
~~07-12209~~
07-11926

6. CONTACT NAME (must be provided)

A. Company/Organization Name: Duff and Phelps LLC
B. Name of Individual to Contact: Greg Maxim
C. Mailing Address: 919 Congress Ave. Suite 1450
D. City, State, ZIP: Austin, TX 78701
E. Telephone number and fax number: (512) 671-5580 Fax (512) 671-5501
F. E-Mail address (if available): gregory.maxim@duffandphelps.com

7. RELEVANT RULE, REGULATION, OR STATUTORY PROVISION

Please reference Section 8. Each item is detailed with the proper statute, regulation, or environmental regulatory provision.

8. DESCRIPTION OF PROPERTY

Background

The Colorado Bend Energy Center (the "Facility"), owned by Navasota Wharton Energy Partners LP, is a combined cycle natural-gas fired power plant located in Wharton, Wharton County, Texas. The Facility is intended to have a total capacity of 825 Mw, built in three phases. Phase has a capacity of 275 Mw and was completed in June of 2007. Phase 2, currently under construction, is to be completed in June of 2008 and will also have a 275 Mw capacity. Each phase consists of 2 GE 7-EA combustion turbine units utilizing the GE Dry Low NOx combustion control system technology, 2 heat recovery steam generating (HRSG) units, and one steam turbine unit. The Facility utilizes a cooling tower within the circulating water system for condenser cooling water needs and condensate return purposes.

Overview of Combined Cycle Technology

The Facility consists of a combined-cycle gas turbine power plant with gas Combustion Turbines ("CTs") equipped with heat recovery steam generators to capture heat from the gas turbine exhaust. Steam produced in the heat recovery steam generators powers a steam turbine generator(s) to produce additional electric power. Use of the otherwise wasted heat in the turbine exhaust gas results in higher plant thermal efficiency compared to other combustion technologies. Combined-cycle plants currently entering service can convert approximately 50% of the chemical energy of natural gas into electricity (HHV basis).

The Rankine cycle is a thermodynamic cycle that converts heat from an external source into work. In a Rankine cycle, external heat from an outside source is provided to a fluid in a closed-loop system. This fluid, once pressurized, converts the heat into work output using a turbine. The fluid most often used in a Rankine cycle is water (steam) due to its favorable properties, such as nontoxic and unreactive chemistry, abundance, and low cost, as well as its thermodynamic properties. The thermal efficiency of a Rankine cycle is usually limited by the working fluid. Without pressure reaching super critical the temperature range the

Rankine cycle can operate over is quite small, turbine entry temperatures are typically 565°C (the creep limit of stainless steel) and condenser temperatures are around 30°C. This gives a theoretical Carnot efficiency of around 63% compared with an actual efficiency of 42% for a modern coal-fired power station. This low turbine entry temperature (compared with a gas turbine) is why the Rankine cycle is often used as a bottoming cycle in combined cycle gas turbine power stations.

The Brayton cycle is a constant pressure thermodynamic cycle that converts heat from combustion into work. A Brayton engine, as it applies to a gas turbine system, will consist of a fuel or gas compressor, combustion chamber, and an expansion turbine. Air is drawn into the compressor, mixed with the fuel, and ignited. The resulting work output is captured through a pump, cylinder, or turbine. A Brayton engine forms half of a combined cycle system, which combines with a Rankine engine to further increase overall efficiency. Cogeneration systems typically make use of the waste heat from Brayton engines, typically for hot water production or space heating.

By combining both gas and steam cycles, high input temperatures and low output temperatures can be achieved. The efficiency of the cycles are additive, because they are powered by the same fuel source. A combined-cycle plant has a thermodynamic cycle that operates between the gas turbine's high firing temperature and the waste heat temperature from the condensers of the steam cycle. This large range means that the Carnot efficiency of the cycle is high. The actual efficiency, while lower than this is still higher than that of either plant on its own. The thermal efficiency of a combined-cycle power plant is the net power output of the plant divided by the heating value of the fuel. If the plant produces only electricity, efficiencies of up to 59% can be achieved.

A single-train combined-cycle plant consists of one gas turbine generator, a heat recovery steam generator (HSRG) and a steam turbine generator ("1 x 1" configuration). As an example, an "FA-class" combustion turbine, the most common technology in use for large combined-cycle plants within the state of Texas and other locations throughout the United States, represents a plant with approximately 270 megawatts of capacity.

See Figure 1 – Standard Combined-Cycle Configuration, below.

It is common to find combined-cycle plants using two or even three gas turbine generators and heat recovery steam generators feeding a single, proportionally larger steam turbine generator. Larger plant sizes result in economies of scale for construction and operation, and designs using multiple combustion turbines provide improved part-load efficiency. A 2 x 1 configuration using FA-class technology will produce about 540 megawatts of capacity at International Organization for Standardization ("ISO") conditions. ISO references ambient conditions at 14.7 psia, 59 F, and 60% relative humidity.

Because of high thermal efficiency, high reliability, and low air emissions,

combined-cycle gas turbines have been the new resource of choice for bulk power generation for well over a decade. Other attractive features include significant operational flexibility, the availability of relatively inexpensive power augmentation for peak period operation and relatively low carbon dioxide production.

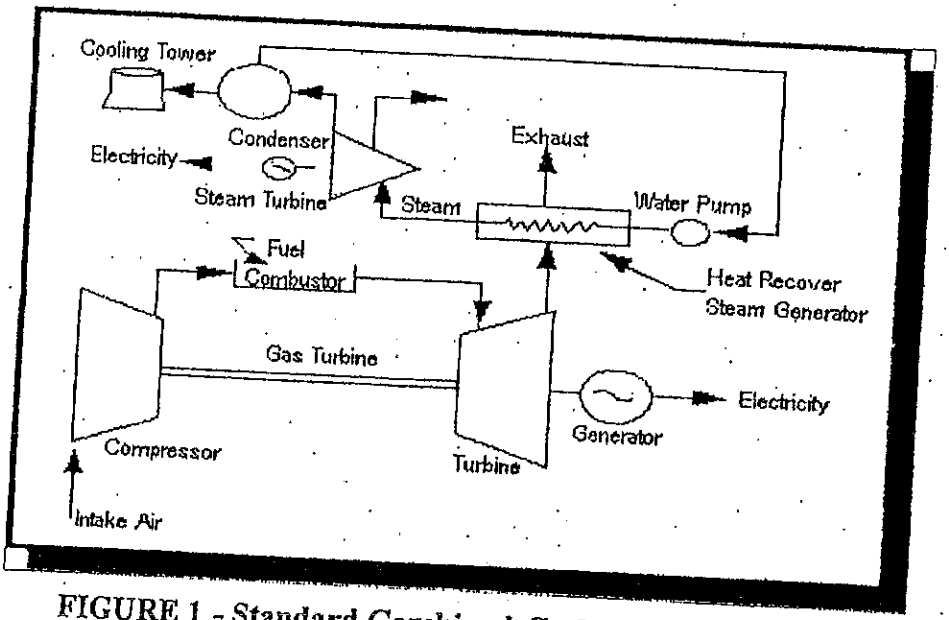

FIGURE 1 - Standard Combined-Cycle Configuration (1)

As an example, consider a gas turbine cycle that has an efficiency of 40%, which is a representative value for current Brayton Cycle gas turbines, and the Rankine Cycle has an efficiency of 30%. The combined-cycle efficiency would be 58%, which is a very large increase over either of the two simple cycles. Some representative efficiencies and power outputs for different cycles are shown in Figure 2 – Comparison of Efficiency and Power Output of Various Power Products, below.

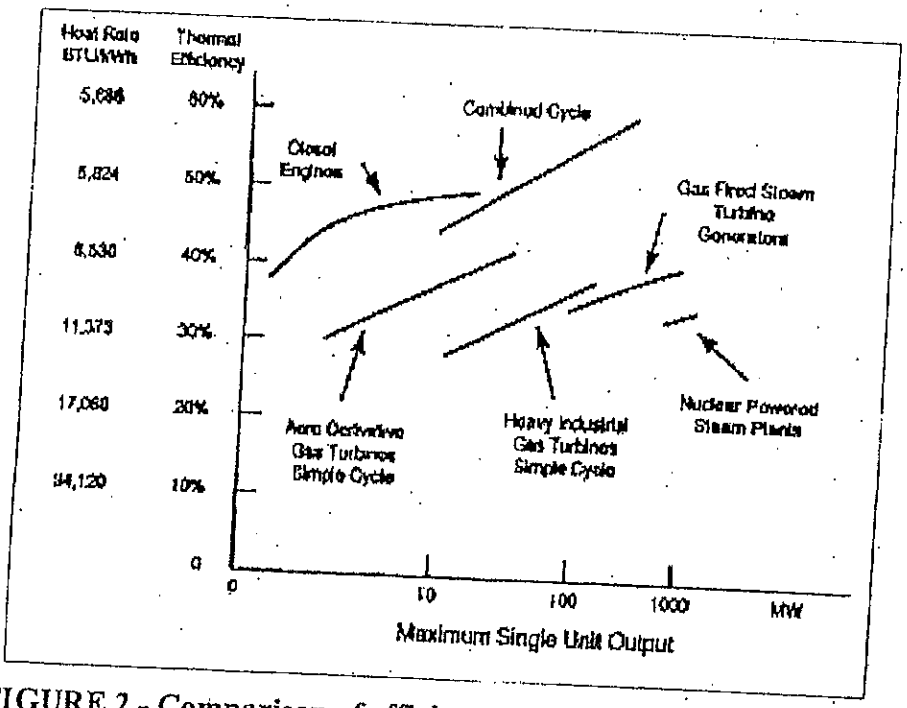

FIGURE 2 - Comparison of efficiency and power output of various power products [Bartol (1997)] (2)

Current Regulatory Authority for Output-Based Emissions

Innovative power technologies such as combined-cycle technology offer enormous potential to improve efficiency and enhance the environmental footprint of power generation through the reduction and/or prevention of air emissions to the environment. Currently, two thirds of the fuel burned to generate electricity in traditional fossil-fired steam boilers is lost. Traditional U.S. power generation facility efficiencies have not increased since the 1950s and more than one fifth of the U.S. power plants are more than 50 years old. In addition, these facilities are the leading contributors to U.S. emissions of carbon dioxide, NOx, sulfur dioxide ("SO2"), and other contaminants into the air and water.

The ability to recognize and regulate the efficiency benefits of pollution reduction and/or prevention through the use of combined-cycle technology is achieved through the use of Output-Based emissions standards, incorporated since September 1998 within the U.S. EPA's new source performance standards ("NSPS") for NOx, from both new utility boilers and new industrial boilers. Pursuant to section 407(c) of the Clean Air Act in subpart Da (Electric Utility Steam Generating Units) and subpart Db (Industrial-Commercial-Institutional Steam Generating Units) of 40 CFR part 60, the U.S. EPA revised the NOx emissions limits for steam generating units for which construction, modification, or reconstruction commenced after July 9, 1997 (3). Output-Based regulations are also exemplified by those used in the U.S. EPA's NOx Cap and Trade Program for the NOx State Implementation Plan ("SIP") Call

of 1998, which uses units of measure such as lb/MWh generated or lb concentration ("ppm"), which relate to the emissions to the productive output – electrical generation of the process.(4)

The use of innovative technologies such as combined-cycle units reduces fossil fuel use and leads to multi-media reductions in the environmental impacts of the production, processing transportation, and combustion of fossil fuels. In addition, reducing fossil fuel combustion is a pollution prevention measure that reduces emissions of all products of combustion, not just the target pollutant (currently NOx) of a federal regulatory program.

Authority to Expand Pollution Control Equipment & Categories in Texas

Under Texas House Bill 3732 ("HB3732") enacted in 2007, Section 11.31 of the Texas Tax Code is amended to add certain plant equipment and systems to the current list of air, water, or land pollution control devices exempt from property taxation in Texas.

Specifically, the language reads as follows:

SECTION 4. Section 11.31, Tax Code, is amended by adding Subsections (k), (l), and (m) to read as follows:

(k) The Texas Commission on Environmental Quality shall adopt rules establishing a nonexclusive list of facilities, devices, or methods for the control of air, water, or land pollution, which must include:

(1) coal cleaning or refining facilities;

(2) atmospheric or pressurized and bubbling or circulating fluidized bed combustion systems and gasification fluidized bed combustion combined-cycle systems;

(3) ultra-supercritical pulverized coal boilers;

(4) flue gas recirculation components;

(5) syngas purification systems and gas-cleanup units;

(6) enhanced heat recovery systems;

(7) exhaust heat recovery boilers;

(8) heat recovery steam generators;

(9) superheaters and evaporators;

(10) enhanced steam turbine systems;

(11) methanation;

(12) coal combustion or gasification byproduct and coproduct handling, storage, or treatment facilities;

(13) biomass cofiring storage, distribution, and firing systems;

(14) coal cleaning or drying processes, such as coal drying/moisture reduction, air figging, precombustion decarbonization, and coal flow balancing technology;

(15) oxy-fuel combustion technology, amine or chilled ammonia scrubbing, fuel or emission conversion through the use of catalysts, enhanced scrubbing technology, modified combustion technology such as chemical looping, and cryogenic technology;

(16) if the United States Environmental Protection Agency adopts a final rule or regulation regulating carbon dioxide as a pollutant, property that is used, constructed, acquired, or installed wholly or partly to capture carbon dioxide from an anthropogenic source in this state that is geologically sequestered in this state;

(17) fuel cells generating electricity using hydrogen derived from coal, biomass, petroleum coke, or solid waste; and

(18) any other equipment designed to prevent, capture, abate, or monitor nitrogen oxides, volatile organic compounds, particulate matter, mercury, carbon monoxide, or any criteria pollutant.

(l) The Texas Commission on Environmental Quality by rule shall update the list adopted under Subsection (k) at least once every three years. An item may be removed from the list if the commission finds compelling evidence to support the conclusion that the item does not provide pollution control benefits.

(m) Notwithstanding the other provisions of this section, if the facility, device, or method for the

control of air, water, or land pollution described in an application for an exemption under this section is a facility, device, or method included on the list adopted under Subsection (k), the executive director of the Texas Commission on Environmental Quality, not later than the 30th day after the date of receipt of the information required by Subsections (c)(2) and (3) and without regard to whether the information required by Subsection (c)(1) has been submitted, shall determine that the facility, device, or method described in the application is used wholly or partly as a facility, device, or method for the control of air, water, or land pollution and shall take the actions that are required by Subsection (d) in the event such a determination is made.

Under the TCEQ's recently updated "Tax Relief for Pollution Control Property – Application Instructions and Equipment and Categories List – Effective January 2008", the Equipment and Categories List - Part B ("ECL Part B") is a list of the pollution control property categories adopted and set forth in TTC Sec. 26.045(f). The taxpayer is to supply a pollution control percentage for the equipment listed in Part B via calculations demonstrating pollution control, prevention and/or reductions achieved by the listed equipment or systems.

The following property descriptions outline the environmental purpose, including the anticipated environmental benefit of pollution control additions considered under the Application Instructions' ECL Part B that have been constructed and placed into use at the Facility as of its placed-in-service date, or installed subsequent to in-service since 1994:

Property Descriptions

Item #1 & 3 Combined-Cycle Gas Turbine Plant Heat Recovery Steam Generator ("HRSG") and Support Systems Tier IV B-8

40 CFR Part 60 Subparts DA and DB, NOx Limits for Electric Utility Steam Generating Units and Industrial-Commercial-Institutional Steam Generating Units for New Source Performance Standards ("NSPS").

TAC Rule 106.512, Standard Permit for Electric Generating Units (EGU)

NOTE: Permits issued under Texas Clean Air Act's Health & Safety Code Sections 382.011, applies to all electric generating units that emit air contaminants, regardless of size, and it is to reflect Best Available Control Technology ("BACT") for electric generating units on an output basis in pounds of NOx per megawatt hour, adjusted to reflect a simple cycle power plant.

The heat recovery steam generator ("HRSG") found in the Facility is a heat exchanger that recovers heat from a hot gas stream. It produces steam that can be used in a process or used to drive a steam turbine. A common application for an HRSG is in a combined-cycle power station, where hot exhaust from a gas turbine is fed to an HRSG to generate steam which in turn drives a steam turbine. This combination produces electricity in a more thermally efficient manner than either the gas turbine or steam turbine alone.

The Facility's HRSGs consist of three major components: the Evaporator, Superheater, and Economizer. The different components are put together to meet the operating requirements of the unit. Modular HRSGs normally consist of three sections: an LP (low pressure) section, a reheat/IP (intermediate pressure) section, and an HP (high pressure) section. The reheat and IP sections are separate circuits inside the HRSG. The IP steam partly feeds the reheat section. Each section has a steam drum and an evaporator section where water is converted to steam. This steam then passes through superheaters to raise the temperature and pressure past the saturation point.

Item #2 & 4 Steam Turbine and Support Systems Tier IV B-10

40 CFR Part 60 Subparts DA and DB, NOx Limits for Electric Utility Steam Generating Units and Industrial-Commercial-Institutional Steam Generating Units for New Source Performance Standards ("NSPS").

TAC Rule 106.512, Standard Permit for Electric Generating Units (EGU)

NOTE: Permits issued under Texas Clean Air Act's Health & Safety Code Sections 382.011, applies to all electric generating units that emit air contaminants, regardless of size, and it is to reflect Best Available Control Technology ("BACT") for electric generating units on an output basis in pounds of NOx per megawatt hour, adjusted to reflect a simple cycle power plant.

The steam turbine(s) found in the Facility operate on the Rankine cycle in combination with the Brayton cycle, as described above. Steam created in the Facility HRSG(s) from waste heat that would have otherwise been lost to the atmosphere enters the steam turbine via a throttle valve, where it powers the turbine

and connected generator to make electricity. Use of HRSG/Steam Turbine System combination provides the Facility with an overall efficiency of greater than 50%. Steam turbine systems similar to the Facility's have a history of achieving up to 95% availability on an annual basis and can operate for more than a year between shutdown for maintenance and inspections. (5)

Pollution Control Percentage Calculation: Avoided Emissions Approach

To calculate the percentage of the equipment or category deemed to be pollution control equipment, the Avoided Emissions approach has been used. This approach relies on thermal output differences between a conventional power generation system and the combined-cycle system at the Facility. Specifically, the percentage is determined by calculating the displacement of emissions associated with the Facility's thermal output and subtracting these emissions from a baseline emission rate. These displaced emissions are emissions that would have been generated by the same thermal output from a conventional system.

Greater energy efficiency reduces all air contaminant emissions, including the greenhouse gas, carbon dioxide. Higher efficiency processes include combined-cycle operation and combined heat and power ("CHP") generation. For electric generation the energy efficiency of the process expressed in terms of millions of British thermal units ("MMBTU's") per Megawatt-hour. Lower fuel consumption associated with increased fuel conversion efficiency reduces emissions across the board – that is NOx, SOx, particulate matter, hazardous air pollutants, and greenhouse gas emissions such as CO2.

In calculating the percent exempt for the listed items from the ECL-Part B, we utilized Output-Based NOx allocation method for both power generation projects that replaced existing facilities and "Greenfield" power and heat generation facilities. We looked at the various fossil fuel technologies in use today and chose the baseline facility to be a natural gas fuel-fired steam generator. We benchmarked this conventional generation to the subject natural gas-fired combined cycle generator at the Facility. By doing so, we narrowed the heat rate factors as much as possible to be conservative and uniform in modeling. The benchmark heat rate factor is the following:

Natural Gas fuel-fired Steam Generator: 10,490 BTU's/kWh

This baseline heat rate purposely omits other fossil fuel sources in order to eliminate impurity type characteristics, which in turn eliminated the NOx emission and cost of control differences of each fossil fuel and generator type. Comparing the emissions impact of different energy generation facilities is concise when emissions are measured per unit of useful energy output. For the purpose of our calculations, we converted all the energy output to units of MWh (1 MWh = 3.413 MMBTU), and compared the total emission rate to the baseline facility.

The comparison steps to calculate the NOx reduction is as follows:

Calculation (Reference Schedule A)

Step 1 – Subject Output-Based Limit Calculation (lbs NOx / MWh)

(Input-based Limit (lbs NOx/MMBTU)) X (Heat Rate (Btu/kWh)) / (1,000,000 Btu / 1,000 kWh) = Output: (lbs NOx/MWh),

Step 2 – Subject Output Conversion Calculation (NOx Tons / Year)

(Output (lbs NOx/MWh) X (Unit Design Capacity (MW)) X (Capacity Factor) X ((365 Days) X (24 hrs/day)) / 2,000 lbs = Output: (NOx Tons/Year)

Step 3 – Baseline Output-Based Limit Calculation (lbs NOx / MWh)

(Input-based Limit (lbs NOx/MWh)) X (Heat Rate (Btu/kWh)) / (1,000,000 Btu / 1,000 kWh) = Output: (lbs NOx/MWh)

Step 4 – Baseline Output Conversion Calculation (NOx Tons / Year)

(Output (lbs NOx/MMBtu) X (Unit Design Capacity (MW)) X (Capacity Factor) X ((365 Days) X (24 hrs/day)) / 2,000 lbs = Output: (NOx Tons/Year)

Step 5 – Percent NOx Reduction Calculation

$((\text{Output Baseline})_{\text{step 4}} - (\text{Output Subject}))_{\text{step 2}} / (\text{Output Subject})_{\text{step 2}} = \%$ Reduction Output Subject

Step 6 – Percent Exempt Calculation

(Total Subject Facility Cost) X (% NOx Reduction) = Capital Cost of NOx Avoidance

Step 7 – Percent Exempt Calculation

Total Cost of NOx Avoidance / Total Cost of HB 3732 Equipment = % Exempt

- If % Exempt is greater than 100% HB 3732 Equipment is 100% Exempt
- If % Exempt is less than 100% then HB 3732 Equipment is partially exempt at the Step 6 calculation.

NOTE: See the attached calculation sheet for the details regarding Facility-specific calculations and property tax exemption percentage results based upon these calculations.

REFERENCES

1. "Output-Based Regulations: A Handbook for Air Regulators", U.S. Environmental Protection Agency, Office of Atmospheric Programs – Climate Protection Partnerships Division, August, 2004, p.4.

2. "Output-Based Emissions Standards; Advancing Innovative Energy Technologies", Northeast-Midwest Institute; 2003, p. 9.

3. IBID, p.13.

4. "Output-Based Regulations: A Handbook for Air Regulators", U.S. Environmental Protection Agency, Office of Atmospheric Programs – Climate Protection Partnerships Division, August, 2004, p.4.

5. http://www.cogeneration.net/Combined_Cycle_Power_Plants.htm

6. "Output-Based Emissions Standards; Advancing Innovative Energy Technologies", Northeast-Midwest Institute; 2003, p. 9.

9. PARTIAL PERCENTAGE CALCULATION

N/A.

10. PROPERTY CATEGORIES AND COSTS

See attached Schedule 10.

11. EMISSION REDUCTION INCENTIVE GRANT

Will an application for an Emission Reduction Incentive Grant be on file for this property/project:

[ ] Yes [X] No

12. APPLICATION DEFICIENCIES

After an initial review of the application, the TCEQ may determine that the information provided with the application is not sufficient to make a use determination. The TCEQ may send a notice of deficiency, requesting additional information that must be provided within 30 days of written notice.

13. FORMAL REQUEST FOR SIGNATURE

By signing this application, you certify that this information is true to the best of your knowledge and belief.

NAME: _____ DATE: 22 Apr 2008

TITLE: Director

COMPANY: Duff and Phelps LLC

Under Texas Penal Code, Section 37.10, if you make a false statement on this application, you could receive a jail term of up to one year and a fine up to $2,000, or a prison term of two to 10 years and a fine of up to $5,000.

14. DELINQUENT FEE/PENALTY PROTOCOL

This form will not be processed until all delinquent fees and/or penalties owed to the TCEQ or the Office of the Attorney General on behalf of the TCEQ are paid in accordance with the Delinquent Fee and Penalty Protocol. (Effective 9/1/2006)

Navasota - Colorado Bend - Phase I
3821 S. State Hwy 60
TCEQ Use Determination Application - 2008
Scheule 10
Tier IV

10. PROPERTY CATEGORIES AND COST

PROPERTY	PROJECT ID. NO.	IN SERVICE DATE	TAXABLE ON OR BEFORE 1/1/94? (Y / N)	TIER IV DECISION FLOW CHART BOX	ECL NUMBER	ESTIMATED PURCHASE COST	% EXEMPT	EXEMPT COST
Heat Recovery Steam Generators (HRSG)	1	2007	N	3	B-8	$ 26,544,805	100%	$ 26,544,805
Steam Turbine System	2	2007	N	3	B-10	$ 10,091,206	100%	$ 10,091,206
					Tier IV Total	$ 36,636,012		$ 36,636,012

Navasota - Colorado Bend - Phase II
3821 S. State Hwy 60
TCEQ Use Determination Application - 2008
Scheule 10
Tier IV

10. PROPERTY CATEGORIES AND COST

PROPERTY	PROJECT ID. NO.	IN SERVICE DATE	TAXABLE ON OR BEFORE 1/1/94? (Y / N)	TIER IV DECISION FLOW CHART BOX	ECL NUMBER	ESTIMATED PURCHASE COST	% EXEMPT	EXEMPT COST
Heat Recovery Steam Generators (HRSG)	3	CWIP	N	3	B-8	$ 30,018,278	100%	$ 30,018,278
Steam Turbine System	4	CWIP	N	3	B-10	$ 22,386,336	100%	$ 22,386,336
					Tier IV Total	$ 52,404,614		$ 52,404,614

52 404 614
36 636 012
89 040 636

Navasota Wharton Energy Partners LP
Colorado Bend Energy Center - Phase I
Schedule A - 2008 Thermal Efficiency Calculation

Subject Details:

Average Heat Rate [1]	7,746 (Btu/kWh)
NOx Emissions [2]	168.6 Tons / year
Plant Capacity [3]	275 MW
Capacity Factor [4]	100.00%
Technology [5]	Combined Cycle
Total Subject Facility Cost [6]	$169,296,979
Total Cost of Tier IV Equipment [7]	$36,636,012

Baseline Details:

Average Heat Rate [8]	10,490 Btu/kWh
Technology [9]	Steam Turbine

STEP 1
Subject Output-Based Limit Calculation (lbs NOx / MWh)

Input-based Limit (lbs NOx/MMBtu)	x	Heat Rate (Btu/kWh)	/	Unit Conversions (1,000,000 Btu / 1000 kWh)	=	Output-based Limit (lbs NOx/MWh)
0.0198		7,746		1,000		0.1533

STEP 2
Subject Output Conversion Calculation (NOx Tons / Year)

Output-based Limit (lbs NOx/MWh)	x	Capacity (MW)	x	Capacity Factor	x	Unit Conversions (365 days * 24 Hours / 2,000 lbs)	=	Output NOx (Tons/Year)
0.1533		275		100.00%		4		168.6

STEP 3
Baseline Output-Based Limit Calculation (lbs NOx / MWh)

Input-based Limit (lbs NOx/MMBtu)	x	Heat Rate (Btu/kWh)	/	Unit Conversions (1,000,000 Btu / 1000 kWh)	=	Output-based Limit (lbs NOx/MWh)
0.0198		10,490		1,000		0.2077

STEP 4
Baseline Output Conversion Calculation (NOx Tons / Year)

Output-based Limit (lbs NOx/MWh)	x	Capacity (MW)	x	Capacity Factor	x	Unit Conversions (365 days * 24 Hours / 2,000 lbs)	=	Output NOx (Tons/Year)
0.2077		275		100.00%		4		228.5

STEP 5
Percent NOx Reduction Calculation

(Output Baseline	-	Output Subject)	/	Output Subject	=	% NOx Reduction
228.5		168.6		168.6		35.5%

STEP 6
Percent Exempt Calculation

Total Subject Unit Cost	X	% NOx Reduction	=	Capital Cost of NOx Avoidance
$169,296,979		35.5%		$60,100,428

STEP 7
Percent Exempt Calculation

Total Cost of NOx Avoidance	/	Total Cost of HB 3732 Equipment	=	% Exempt
$60,100,428		$36,636,012		164.0%

Conclude	100%

(1) - Heat rate represents plant performance test heat rate (HHV) and was provided by the client
(2) - NOx emissions is the NOx pollutant emission permit limit in tons per year provided by the client
(3) - Plant capacity is the average nominal capacity and was provided by the client.
(4) - Capacity factor is the maximum operating level allowed under the emissions permit provided by the client
(5) - Technology represents the actual technology of the subject
(6) - Total subject facility cost represents the total cost to build the entire facility and it was determined based on data provided by the client
(7) - Total Tier IV equipment was determined by allocating the eligible TCEQ ECL part B equipment and their associated cost from actual data provide by the client
(8) - Baseline heat rate was published by the Energy Information Administration ("EIA")
(9) - Baseline technology represents the technology that the subject would have replaced at the time of the subjects construction

Navasota Wharton Energy Partners LP
Colorado Bend Energy Center - Phase II
Schedule A - 2008 Thermal Efficiency Calculation

Subject Details:	
Average Heat Rate [1]	7,746 (Btu/kWh)
NOx Emissions [2]	168.6 Tons / year
Plant Capacity [3]	275 MW
Capacity Factor [4]	100.00%
Technology [5]	Combined Cycle
Total Subject Facility Cost [6]	$162,042,822
Total Cost of Tier IV Equipment [7]	$52,404,614
Baseline Details:	
Average Heat Rate [8]	10,490 Btu/kWh
Technology [9]	Steam Turbine

STEP 1
Subject Output-Based Limit Calculation (lbs NOx / MWh)

Input-based Limit (lbs NOx/MMBtu)	x	Heat Rate (Btu/kWh)	/	Unit Conversions (1,000,000 Btu / 1000 kWh)	=	Output-based Limit (lbs NOx/MWh)
0.0198		7,746		1,000		0.1533

STEP 2
Subject Output Conversion Calculation (NOx Tons / Year)

Output-based Limit (lbs NOx/MWh)	x	Capacity (MW)	x	Capacity Factor	x	Unit Conversions (365 days * 24 Hours / 2,000 lbs)	=	Output NOx (Tons/Year)
0.1533		275		100.00%		4		168.6

STEP 3
Baseline Output-Based Limit Calculation (lbs NOx / MWh)

Input-based Limit (lbs NOx/MMBtu)	x	Heat Rate (Btu/kWh)	/	Unit Conversions (1,000,000 Btu / 1000 kWh)	=	Output-based Limit (lbs NOx/MWh)
0.0198		10,490		1,000		0.2077

STEP 4
Baseline Output Conversion Calculation (NOx Tons / Year)

Output-based Limit (lbs NOx/MWh)	x	Capacity (MW)	x	Capacity Factor	x	Unit Conversions (365 days * 24 Hours / 2,000 lbs)	=	Output NOx (Tons/Year)
0.2077		275		100.00%		4		228.5

STEP 5
Percent NOx Reduction Calculation

(Output Baseline		Output Subject)	/	Output Subject	=	% NOx Reduction
228.5		168.6		168.6		35.5%

STEP 6
Percent Exempt Calculation

Total Subject Unit Cost	X	% NOx Reduction	=	Capital Cost of NOx Avoidance
$162,042,822		35.5%		$57,525,202

STEP 7
Percent Exempt Calculation

Total Cost of NOx Avoidance	/	Total Cost of HB 3732 Equipment	=	% Exempt
$57,525,202		$52,404,614		109.8%

Conclude	100%

(1) - Heat rate represents the anticipated heat rate (HHV) and was provided by the client
(2) - NOx emissions is the NOx pollutant emission permit limit in tons per year provided by the client
(3) - Plant capacity is the average nominal capacity and was provided by the client
(4) - Capacity factor is the maximum operating level allowed under the emissions permit provided by the client
(5) - Technology represents the actual technology of the subject
(6) - Total subject facility cost represents the total cost to build the entire facility and it was determined based on data provide by the client
(7) - Total Tier IV equipment was determined by allocating the eligible TCEQ ECL pan II equipment and their associated cost from actual data provide by the client
(8) - Baseline heat rate was published by the Energy Information Administration ("EIA")
(9) - Baseline technology represents the technology that the subject would have replaced at the time of the subjects construction

Attachment B

Buddy Garcia, *Chairman*
Larry R. Soward, *Commissioner*
Bryan W. Shaw, Ph.D., *Commissioner*
Glenn Shankle, *Executive Director*

TEXAS COMMISSION ON ENVIRONMENTAL QUALITY

Protecting Texas by Reducing and Preventing Pollution

USE DETERMINATION

The Texas Commission on Environmental Quality has reviewed Use Determination Application, 07-11926, filed by:

NAVASOTA WHARTON ENERGY PARTNERS LP
COLORADO BEND
3821 S STATE HWY 60
WHARTON TX 77488

The pollution control property/project listed in the Use Determination Application is:

This facility has four thermally efficient heat recovery steam generators (HRSGs) and two steam turbines. This application is a Tier IV application seeking a partial use determination for the HRSGs and the enhanced steam turbines.

The outcome of the review is:

A 100% positive use determination for the four Heat Recovery Steam Generators. This equipment is considered to be pollution control equipment and was installed to meet or exceed federal or state regulations.

A negative determination is issued for the two steam turbines. The use of the steam turbines does not provide an environmental benefit at the site. The steam turbines are not considered to be pollution control equipment.

Executive Director

Date

TAX RELIEF FOR POLLUTION CONTROL PROPERTY: TECHNICAL REVIEW DOCUMENT

Reviewed By: RLH App. No.: 07 - 11926 Review Start Date: 4/8/2008

Company Name: NAVASOTA WHARTON ENERGY PARTNERS LP
Facility Name: COLORADO BEND
County: WHARTON Outstanding Fees: N
Batch/Voucher Number:B500028

ADMINISTRATIVE REVIEW

Administrative Complete Date:4/8/2008

TIER LEVEL
What Tier is this application? The application was filed as a Tier IV application. Is this the appropriate level?

The property listed on this application, Heat Recovery Steam Generators and a steam turbine are items B8 and B10 on the Equipment and Categories List. This application was filed as a Tier IV. Tier IV is the appropriate level for this application.

RELEVANT RULE, REGULATION, OR STATUTORY PROVISION
The rule listed in the application is: 40 CFR 60.44Da
The appropriate rule is: 40 CFR 60.44Da

Explain why this is the appropriate rule?

40 CFR 60.Subpart DA: Standards of Performance for New Stationary Sources. Standards of performance for Electric Utility Steam Generating Units for Which Construction is Commenced after September 18, 1978. This is an appropriate rule.

BRIEF DESCRIPTION OF PROPERTY
The property is described as:

This facility has four thermally efficient heat recovery steam generators (HRSGs) and two steam turbines. This application is a Tier IV application seeking a partial use determination for the HRSGs and the enhanced steam turbines.

Is an adequate description and purpose of the property provided? Does it list the anticipated environmental benefits? Are sketches and flow diagrams provided if needed?

An adequate description of the property was provided, and the purpose of the property was listed. The anticipated environmental benefit is listed. Sketches and flow diagrams were provided.

DECISION FLOWCHART(30 TAC 17.15(a))
Mark the appropriate boxes: Box 3 Box 5 Box 6(IV) Y Box 10(III) Box 12(I) Box 13(II)
PART B DECISION FLOWCHART (17.15(b))
Mark the appropriate boxes: Box 1Y Box 2 Y Box 3 Y

Describe how the property flowed through the Decision Flowchart:

The Heat Recovery Steam Generators (HRSGs) are listed on Part B of the Equipment & Categories List as item B-8. As Part B equipment the HRSGs leave the Decision Flow Chart at Box 6 and pass through Box 1 of the Part B Decision Flow Chart with a yes answer. Since the use

of HRSGs provide an environmental benefit of reduced NOx emissions at the site there is a yes answer for Box 2. Since there is a reduction in NOx emissions there is an environmental rule which is being met, so there is a yes answer to Box 3. The steam turbine passes through Box 1 on the Part B Decision Flow Chart with a yes answer. Since the use of the steam turbine does not provide an environmental benefit at the site a no answer is the result of Box 2. The steam turbine is not eligible for a positive determination.

TIER III or IV APPLICATIONS

Does your calculation agree with the applicants?

No. The application contains a proposed formula for calculating the pollution control value of the HRSGs and the steam turbine. The formula is outcome determinative, and its focus is not on the pollution control aspect of the property. The Executive Director disagrees with this formula.

PROPERTY CATEGORIES AND COSTS

Is the table completed correctly? Has the applicant certified that all listed property became taxable for the first time after January 1, 1994? Is all information necessary for conducting the technical review included.

The table was completed correctly. The applicant certified that all listed property became taxable for the first time after January 1, 1994. All the information necessary for conducting the technical review was included on the application.

TECHNICAL DEFICIENCIES

Is the application complete as received: Y If the application was not administratively complete explain below when justifying the final decision in the final determination section. If the application was not technically complete then:

Provide the language to be used in the Notice of Deficiency (NOD) letter:

Summarize the NOD response:

Provide the language used in the second NOD letter:

Summarize the second NOD response:

Provide the language used in the thied NOD letter:

Summarize the third NOD response:

FINAL DETERMINATION

If the property description has been summarized enter the detailed property description:

This facility has four thermally efficient heat recovery steam generators (HRSGs) and two steam

turbines. This application is a Tier IV application seeking a partial use determination for the HRSGs and the enhanced steam turbines.

Provide the reason for your final determination:

The Heat Recovery Steam Generators meet all of the requirements of Chapter 17. A positive use determination based on the most appropriate formula should be issued for the Heat Recovery Steam Generators. The most appropriate formula has been determined by the Executive Director. A negative determination should be issued for the steam turbine. The use of the steam turbine does not result in there being an environmental benefit at the site.

Provide the language for the final determination.

A positive use determination of 100% for the four Heat Recovery Steam Generators. A negative determination is issued for the steam turbine. The use of the steam turbine does not provide an environmental benefit at the site. The steam turbine is not considered to be pollution control equipment.

Highlight the required signatures and establish the appropriate due dates.

Reviewed: [signature] **Date Signed:** 5/1/08

Peer Reviewed: [signature] **Date Signed:** 5-1-08

Team Leader: [signature] **Date Signed:** 5/1/08

Section Manager: [signature] **Date Signed:** MAY 1 2008

Division Director: [signature] **Date Signed:** MAY 1 2008

Attachment C

WHARTON COUNTY
APPRAISAL DISTRICT
2407 1/2 N. Richmond Road
Wharton, Texas 77488

Phone: 979-532-8931
Fax: 979-532-5691

TEXAS COMMISSION ON ENVIRONMENTAL QUALITY
2008 MAY 21 AM 10:00
CHIEF CLERKS OFFICE

May 19, 2008

Office of the Chief Clerk - MC 105
Texas Commission on Environmental Quality
PO Box 13087
Austin, TX. 78711-3087

Re: TCEQ Use Determination No. **07-11926**

Dear Ms. Castañuela,

I am writing this letter as an official appeal of the TCEQ's property tax Pollution Control Exemption Use Determination with the tracking number **07-11926** filed by **Navasota Wharton energy Partners I** for the **Colorado Bend Power Generation** facility. We believe that the Heat Recovery Steam Generators described in this application are production equipment in that they burn natural gas to create steam to generate electricity. This creates pollutants, not reduces them.

Secondly, the pollution control components associated with the HRSG's that do reduce pollution have already been exempted under Use Determination 07-11925. Therefore, this second exemption of the entire HRSG only serves to exempt the non-pollution control components of the units.

I respectfully request that our appeal regarding this Use Determination be granted and the exemption be denied.

Hugh L. Landrum & Associates, Inc. will be acting as our agent in this matter.

Thank you for your time and consideration.

Sincerely,

Tylene Gamble
Chief Appraiser
Wharton County Appraisal District

Attachment D

Buddy Garcia, *Chairman*
Larry R. Soward, *Commissioner*
Bryan W. Shaw, Ph.D., *Commissioner*
Mark R. Vickery, P.G., *Executive Director*

TEXAS COMMISSION ON ENVIRONMENTAL QUALITY

Protecting Texas by Reducing and Preventing Pollution

TEXAS COMMISSION ON ENVIRONMENTAL QUALITY
2009 FEB 23 PM 3:34
CHIEF CLERKS OFFICE

February 23, 2009

LaDonna Castañuela, Chief Clerk
TCEQ Office of Chief Clerk MC-105
P.O. Box 13087
Austin, Texas 78711-3087

Re: TCEQ Docket Nos. 2008-0830-MIS-U (UD No. 07-11914/Tenaska Gateway Partners, Ltd.— Rusk County Appraisal District), 2008-0831-MIS-U (UD No. 07-11966/Freestone Power Generation, L.P.— Freestone Central Appraisal District), 2008-0832-MIS-U (UD No. 07-11971/Borger Energy Associates, L.P.— Hutchinson County Appraisal District), 2008-0849-MIS-U (UD No. 07-11969/ Brazos Valley Energy, L.P.— Fort Bend Central Appraisal District), 2008-0850-MIS-U (UD No. 07-11994/Freeport Energy Center, L.P.— Brazoria County Appraisal District), 2008-0851-MIS-U (UD No. 07-11926/Navasota Wharton Energy Partners, L.P.— Wharton County Appraisal District).
Executive Director's Motion for Continuance

Dear Ms. Castañuela:

Enclosed for filing, please find a copy of the *"Executive Director's Motion for Continuance"* regarding the above referenced use determination appeals. If you have any questions, please do not hesitate to contact me at (512) 239-0969.

Sincerely,

Timothy J. Reidy
Staff Attorney
Environmental Law Division

TCEQ Docket Numbers
2008-0830-MIS-U (UD 07-11914/Tenaska Gateway Partners, Ltd. – Rusk County)
2008-0831-MIS-U (UD 07-11966/Freestone Power Generation, L.P. – Freestone County)
2008-0832-MIS-U (UD 07-11971/Borger Energy Associates, L.P. – Hutchinson County)
2008-0849-MIS-U (UD 07-11969/Brazos Valley Energy, L.P. – Fort Bend County)
2008-0850-MIS-U (UD 07-11994/Freeport Energy Center, L.P. – Brazoria County)
2008-0851-MIS-U (UD 07-11926/Navasota Wharton Energy Partners, L.P. – Wharton County)

APPEAL OF THE EXECUTIVE DIRECTOR'S USE DETERMINATIONS ISSUED TO TENASKA GATEWAY PARTNERS, LTD.; FREESTONE POWER GENERATION, L.P.; BORGER ENERGY ASSOCIATES, L.P.; BRAZOS VALLEY ENERGY, L.P.; FREEPORT ENERGY CENTER, L.P.; and NAVASOTA WHARTON ENERGY PARTNERS, L.P.	§	BEFORE THE
	§	TEXAS COMMISSION ON
	§	ENVIRONMENTAL QUALITY

CHIEF CLERKS OFFICE
2009 FEB 23 PM 3:35
TEXAS COMMISSION ON ENVIRONMENTAL QUALITY

EXECUTIVE DIRECTOR'S MOTION FOR CONTINUANCE

TO THE GENERAL COUNSEL OF THE TEXAS COMMISSION ON ENVIRONMENTAL QUALITY:

The Commission is scheduled to consider the above referenced use determination appeals at its February 25, 2009 agenda meeting. The Executive Director respectfully requests that, pursuant to Section 10.4(b) of Title 30 of the Texas Administrative Code, the Commission continue its consideration of these matters to allow the Executive Director more time to evaluate its current recommendation. The Executive Director has conferred with all parties, and none of the parties oppose this motion.

Respectfully submitted,
Texas Commission on Environmental Quality

Mark R. Vickery, P.G.
Executive Director

Robert Martinez, Director
Environmental Law Division

By _____
Timothy J. Reidy, Staff Attorney
Environmental Law Division

State Bar No. 24058069
P.O. Box 13087, MC 173
Austin, Texas 78711-3087
(512) 239-0969
REPRESENTING THE EXECUTIVE DIRECTOR OF THE TEXAS COMMISSION ON ENVIRONMENTAL QUALITY

CERTIFICATE OF SERVICE

I certify that on February 23, 2009, a copy of the "Executive Director's Motion for Continuance" was filed with the Texas Commission on Environmental Quality's Office of the Chief Clerk, and was sent by hand delivery, first-class mail, or facsimile to all persons on the attached mailing list.

Tim Reidy

Timothy J. Reidy, Staff Attorney
Environmental Law Division
State Bar No. 24058069

TEXAS COMMISSION ON ENVIRONMENTAL QUALITY
2009 FEB 23 PM 3:35
CHIEF CLERKS OFFICE

Les Trobman
General Counsel
Texas Commission on Environmental Quality
Office of General Counsel
P.O. Box 13087, MC-101
Austin, Texas 78711-3087
512/239-5500 Fax 512/239-5533

Terry W. Decker, RPA/CCA/RTA
Chief Appraiser
Rusk County Appraisal District
P. O. Box 7
Henderson, Texas 75653-0007
903/657-3578 Fax 903/657-9073

David Johnson
Tenaska, Inc.
1044 N. 115th St., Suite 400
Omaha, Nebraska 68154-4446

Bud Black, RPA/CTA
Chief Appraiser
Freestone Central Appraisal District
218 North Mount
Fairfield, Texas 75840
903/389-5510 Fax 903/389-5955

Freestone Power Generation L.P.
717 Texas, Suite 1000
Houston, Texas 77002

Greg Maxim
Duff & Phelps LLC
919 Congress Ave., Suite 1450
Austin, Texas 78701
512/671-5580 Fax 512/671-5501

Pritchard & Abbott, Inc.
Attn: Mr. C. Wayne Frazell
4900 Overton Commons Court
Fort Worth, Texas 76132-3687
817/926-7861 Fax 817/927-5314

Diana Hooks, RPA/RTA
Chief Appraiser
Hutchinson County Appraisal District
P. O. Box 5065
Borger, Texas 79008-5065
806/274-2294 Fax 806/273-3400

Borger Energy Associates, LP
7001 Boulevard 26, Suite 310
North Richland Hills, Texas 76180

Dennis Deegear
Duff & Phelps LLC
919 Congress Ave., Suite 1450
Austin, Texas 78701
512/671-5523 Fax 512/671-5501

Glen Whitehead, RPA
Chief Appraiser
Fort Bend County Central Appraisal District
2801 B. F. Terry Blvd.
Rosenberg, Texas 77471-5600
281/344-8623 Fax 281/344-8632

Brazos Valley Energy. L.P.
717 Texas, Suite 1000
Houston, Texas 77002

Hugh L. Landrum & Associates
Attn: Mr. Hugh L. Landrum, Jr.
12621 Featherwood, Suite 325
Houston, Texas 77034
281/484-7000 Fax 281/484-7272

Cheryl Evans
Chief Appraiser
Brazoria County Appraisal District
500 North Chenango
Angleton, Texas 77515
979/849-7792 Fax 979/849-7984

Freeport Energy Center, LP
4100 Underwood Road
Pasadena, Texas 77507

Justin Hyland
Leo Scherrer
Calpine/Dow
717 Texas Ave.
Houston, Texas 77002
713/830-8873 Fax 713/830-8670

Tylene Gamble
Chief Appraiser
Wharton County Appraisal District
2407½ N. Richmond Road
Wharton, Texas 77488
979/532-8931 Fax 979/532-5691

Navasota Wharton Energy Partners, LP
403 Corporate Woods
Magnolia, Texas 77354

D. A. Chris Ekoh
TCEQ Environmental Law Division (MC 173)
P. O. Box 13087
Austin, Texas 78711-3087
512/239-5487 Fax 512/239-0606

Tim Reidy
TCEQ Environmental Law Division (MC 173)
P. O. Box 13087
Austin, Texas 78711-3087
512/239-5487 Fax 512/239-0606

Ron Hatlett
TCEQ Chief Engineers Office (MC 110)
P. O. Box 13087
Austin, Texas 78711-3087
512/239-3100 Fax 512/239-3165

Blas Coy
TCEQ Office of Public Interest Counsel (MC 103)
P. O. Box 13087
Austin, Texas 78711-3087
512/239-6363 Fax 512/239-6377

Docket Clerk
TCEQ Office of the Chief Clerk (MC 105)
P. O. Box 13087
Austin, Texas 78711-3087
512/239-3300 Fax 512/239-3311

Bridget Bohac
512/239-1795 Fax 512/239-1794
TCEQ Office of Public Assistance (MC 108)
P. O. Box 13087
Austin, Texas 78711-3087
512/239-4000 Fax 512/239-4007
Minor Hibbs

TCEQ Chief Engineers Office (MC 168)
P.O. Box 13087
Austin, Texas 78711-3087
512/239-6590 Fax 512-239-1794

Attachment E

Buddy Garcia, *Chairman*
Larry R. Soward, *Commissioner*
Bryan W. Shaw, Ph.D., *Commissioner*
Mark R. Vickery, P.G., *Executive Director*

TEXAS
COMMISSION
ON ENVIRONMENTAL
QUALITY

2009 FEB 23 PM 4:41
CHIEF CLERKS OFFICE

TEXAS COMMISSION ON ENVIRONMENTAL QUALITY

Protecting Texas by Reducing and Preventing Pollution

February 23, 2009

To: Persons on the attached Mailing List (By mail, and facsimile as indicated)

Re: Appeals of the Executive Director's Use Determinations regarding Tenaska Gateway Partners, Ltd. (Rusk County), Freestone Power Generation LP (Freestone County), Borger Energy Associates, LP (Hutchinson County), Brazos Valley Energy L.P. (Fort Bend County), Freeport Energy Center, L.P. (Brazoria County), and Navasota Wharton Energy Partners LP (Wharton County), TCEQ Use Determination Nos. 07-11914, 07-11966, 07-11971, 07-11969, 07-11994 and 07-11926; TCEQ Docket Nos. 2008-0830-MIS-U, 2008-0831-MIS-U, 2008-0832-MIS-U, 2008-0849-MIS-U, 2008-0850-MIS-U, and 2008-0851-MIS-U

The above-named matters are currently scheduled to be considered by the Texas Commission on Environmental Quality ("TCEQ") at its February 25, 2009, public meeting. The TCEQ Executive Director (ED) filed a *Motion for Continuance* (ED's Motion) on February 23, 2009. The ED's Motion asks that the Commission continue its consideration of these above-named matters to allow the ED more time to evaluate its current recommendation. The ED states that none of the parties oppose the ED's Motion.

Pursuant to the ED's Motion, the Office of General Counsel has determined to continue the matter from the February 25, 2009 meeting. Accordingly, this matter is continued indefinitely pursuant to 30 TAC § 10.4. The Office of General Counsel will notify the parties by subsequent letter of the future agenda setting and any associated filing deadlines.

If you have any questions regarding this matter, please contact John Sedberry, Assistant General Counsel, at 512-239-6575.

Respectfully,

Les Trobman
General Counsel

Mailing List

Mailing List

Tenaska Gateway Partners, Ltd. (Rusk County), Freestone Power Generation LP (Freestone County), Borger Energy Associates, LP (Hutchinson County), Brazos Valley Energy L.P. (Fort Bend County), Freeport Energy Center, L.P. (Brazoria County), and Navasota Wharton Energy Partners LP (Wharton County)
TCEQ Docket Nos. 2008-0830-MIS-U, 2008-0831-MIS-U, 2008-0832-MIS-U, 2008-0849-MIS-U, 2008-0850-MIS-U, and 2008-0851-MIS-U

Diana Hooks, RPA/RTA
Chief Appraiser
Hutchinson County Appraisal District
P.O. Box 5065
Borger, Texas 79008-5065
806/274-2294 FAX806/273-3400

Borger Energy Associates, LP
7001 Boulevard 26, Suite 310
North Richland Hills, Texas 76180

Dennis Deegear
Duff and Phelps LLC
919 Congress Ave., Suite 1450
Austin, Texas 78701
512/671-5523 FAX 512/671-5501

Pritchard & Abbott, Inc.
Attn: Mr. C. Wayne Frazell
4900 Overton Commons Court
Fort Worth, Texas 76132-3687
817/926-7861 FAX 817/927-5314

Glen Whitehead, RPA
Chief Appraiser
Fort Bend County Appraisal District
2801 B. F. Terry Blvd.
Rosenberg, Texas 77471-5600
281/344-8623 FAX 281/344-8632

Brazos Valley Energy L.P.
717 Texas, Suite 1000
Houston, Texas 77002

Greg Maxim
Duff and Phelps LLC
919 Congress Ave., Suite 1450
Austin, Texas 78701
512/671-5580 FAX 512/671-5501

Hugh L. Landrum & Associates, Inc.
Attn: Mr. Hugh L. Landrum Jr.
12621 Featherwood Drive, Suite 325
Houston, Texas 77034
281/484-7000 FAX 281/484-7272

Cheryl Evans
Chief Appraiser
Brazoria County Appraisal District
500 North Chenango
Angleton, Texas 77515
979/849-7792 FAX 979/849-7984

Freeport Energy Center, LP
4100 Underwood Road
Pasedena, Texas 77507

Justin Hyland
Leo Scherrer
Calpine Corporation/Dow
717 Texas Ave. Suite 1000
Houston, Texas 77002
713/830-8873 FAX 832/325-0934

Bud Black, RPA/CTA
Chief Appraiser
Freestone Central Appraisal District
218 North Mount
Fairfield, Texas 75840
903/389-5510 FAX 903/389-5955

Freestone Power Generation L.P.
717 Texas, Suite 1000
Houston, Texas 77002

Tylene Gamble
Chief Appraiser
Wharton County Appraisal District
2407 ½ N. Richmond Road
Wharton, Texas 77488
979/532-8931 FAX 979/532-5691

Navasota Wharton Energy Partners LP
403 Corporate Woods
Magnolia, Texas 77354

Terry W. Decker, RPA/CCA/RTA
Chief Appraiser
Rusk County Appraisal District
P.O. Box 7
Henderson, Texas 75653-0007
903/657-3578 FAX 903/657-9073

David D. Johnson
Tenaska, Inc.
1044 N. 115th St., Suite 400
Omaha, Nebraska 68154-4446
402/691-9500 FAX 402/691-9526

Tenaska Gateway Partners, Ltd.
Attn: Mr. Jerry K. Crouse, CFO
1044 N. 115th St., Suite 400
Omaha, Nebraska 68154-4446
402/691-9500 FAX 402/691-9526

Stephanie Bergeron Perdue
TCEQ Environmental Law Division MC 173
P.O. Box 13087
Austin, Texas 78711-3087
512/239-0600 FAX 512/239-0606

Chris Ekoh
TCEQ Environmental Law Division MC 173
P.O. Box 13087
Austin, Texas 78711-3087
512/239-0600 FAX 512/239-0606

Ron Hatlett
TCEQ Small Business & Environmental
Assistance Division MC 110
P.O. Box 13087
Austin, Texas 78711-3087
512/239-3100 FAX 512/239-5675

Blas Coy
TCEQ Office of Public Interest Counsel
MC 103
P.O. Box 13087
Austin, Texas 78711-3087
512/239-6363 FAX 512/239-6377

Docket Clerk
TCEQ Office of Chief Clerk MC 105
P.O. Box 13087
Austin, Texas 78711-3087
512/239-3300 FAX 512/239-3311

Bridget Bohac
TCEQ Office of Public Assistance MC 108
P.O. Box 13087
Austin, Texas 78711-3087
512/239-4000 FAX 512/239-4007

David S. Schanbacher
TCEQ Chief Engineer's Office (MC 168)
P.O. Box 13087
Austin, Texas 78711-3087
512/239-6590 FAX 512/239-1794

Attachment F

TCEQ Docket Numbers
2008-0830-MIS-U (UD 07-11914/Tenaska Gateway Partners, Ltd – Rusk County)
2008-0831-MIS-U (UD 07-11966/Freestone Power Generation, L.P. – Freestone County)
2008-0832-MIS-U (UD 07-11971/Borger Energy Associates, L.P. – Hutchinson County)
2008-0849-MIS-U (UD 07-11969/Brazos Valley Energy, L.P. – Fort Bend County)
2008-0850-MIS-U (UD 07-11994/Freeport Energy Center, L.P. – Brazoria County)
2008-0851-MIS-U (UD 07-11926/Navasota Wharton Energy Partners, L.P. – Wharton County)

Appeal of Executive Director's Use Determination Issue to	§	Before the
Tenaska Gateway Partners, Ltd;	§	
Freestone Power Generation, L.P.;	§	Texas Commission
Borger Energy Associates, L.P.;	§	
Brazos Valley Energy, L.P.;	§	on
Freeport Energy Center, L.P.; and	§	
Navasota Wharton Energy Partners, L.P	§	Environmental Quality

Executive Director's Request for Remand of Applications Submitted by Tenaska Gateway Partners, Ltd; Freestone Power Generation, L.P.; Borger Energy Associates, L.P.; Brazos Valley Energy, L.P.; Freeport Energy Center, L.P.; and Navasota Wharton Energy Partners, L.P.

Pursuant to 30 TAC § 17.25(d), the Executive Director of the Texas Commission on Environmental Quality requests that the General Council remand the above listed applications for further processing.

Respectfully submitted,

Texas Commission on Environmental Quality

Zak Covar
Executive Director

Caroline Sweeney, Deputy Director
Office of Legal Services

Robert Martinez, Director
Environmental Law Division

Daniel Long

Daniel Long, Staff Attorney
Environmental Law Division
State Bar No. 24032679
P.O. Box 13087, MC 173
Austin, Texas 78711-3087
(512) 239-5373
(512) 239-0606

CERTIFICATE OF SERVICE

I certify that on June 18, 2012, the original and 7 copies of the Executive Director's Request for Remand of Applications Submitted by Tenaska Gateway Partners, Ltd; Freestone Power Generation, L.P.; Borger Energy Associates, L.P.; Brazos Valley Energy, L.P.; Freeport Energy Center, L.P.; and Navasota Wharton Energy Partners, L.P. was filed with the Office of the Chief Clerk, Texas Commission on Environmental Quality, and was served by first-class mail, agency mail, electronic mail, or facsimile to all persons on the attached mailing list.

Daniel Long

Daniel Long, Staff Attorney
Environmental Law Division
Texas Commission on Environmental Quality

Mailing List
TCEQ Docket Numbers
2008-0830-MIS-U (UD 07-11914/Tenaska Gateway Partners, Ltd – Rusk County)
2008-0831-MIS-U (UD 07-11966/Freestone Power Generation, L.P. – Freestone County)
2008-0832-MIS-U (UD 07-11971/Borger Energy Associates, L.P. – Hutchinson County)
2008-0849-MIS-U (UD 07-11969/Brazos Valley Energy, L.P. – Fort Bend County)
2008-0850-MIS-U (UD 07-11994/Freeport Energy Center, L.P. – Brazoria County)
2008-0851-MIS-U (UD 07-11926/Navasota Wharton Energy Partners, L.P. – Wharton County)

Appraisal Districts

Terry W. Decker, RRP/CTA/RTA
Chief Appraiser
Rusk County Appraisal District
P. O. Box 7
Henderson, Texas 75653-0007
903/657-3578 Fax 903/657-9073
tdecker@ ruskcad.org

Bud Black, RPA/CTA
Chief Appraiser
Freestone Central Appraisal District
218 North Mount Street
Fairfield, Texas 75840
903/389-5510 Fax 903/389-5955
general.info@freestoncad.org

Diana Hooks, RPA/RTA
Chief Appraiser
Hutchinson County Appraisal District
P. O. Box 5065
Borger, Texas 79008-5065
806/274-2294 Fax 806/273-3400
hcad3@amaonline.com

Glen Whitehead, RPA
Chief Appraiser
Fort Bend County Central Appraisal District
2801 B. F. Terry Blvd.
Rosenberg, Texas 77471-5600
281/344-8623 Fax 281/762-9666
Glenwhitehead@fbcad.org

Cheryl Evans
Chief Appraiser
Brazoria County Appraisal District
500 North Chenango Street
Angleton, Texas 77515
979/849-7792 Fax 979/849-7984
bcad@brazoriacad.org

Tylene Gamble
Chief Appraiser
Wharton County Appraisal District
308 East Milam Street
Wharton, Texas 77488-4918
979/532-8931 Fax 979/532-5691
whartoncad@sbcglobal.net

Pritchard & Abbott, Inc.
Attn: Mr. C. Wayne Frazell
4900 Overton Commons Court
Fort Worth, Texas 76132-3687
817/926-7861 Fax 817/927-5314
wfrazell@pandai.com

Applicants:

David D. Johnson
Tenaska Gateway Partners, Ltd.
1044 N 115th St. Suite 400
Omaha, Nebraska 68154-4446
402/691-9500 Fax 402/691-9226

Freestone Power Generation, L.P.
717 Texas, Suite 1000
Houston, Texas 77002

Borger Energy Associates, L.P.
7001 Boulevard 26, Suite 310
North Richland Hills, Texas 76180

Brazos Valley Energy, L.P.
717 Texas, Suite 1000
Houston, Texas 77002

Freeport Energy Center, L.P.
4100 Underwood Road
Pasadena, Texas 77507

Navasota Wharton Energy Partners LP
403 Corporate Woods
Magnolia, Texas 77354

Greg Maxim
Dennis Deegear
Duff & Phelps LLC
919 Congress Ave., Suite 1450
Austin, Texas 78701
512/671-5580 Fax 512/671-5501
gregory.maxim@duffandphelps.com
dennis.deegar@duffandphelps.com

Justin Hyland
Leo Scherrer
717 Texas Avenue
Houston, Texas 77002
713/830-8873 Fax 713/830-8670
hylandj@calpine.com
lscherrer@dow.com

Hugh L. Landrum & Associates
Attn: Mr. Hugh L. Landrum, Jr.
12621 Featherwood, Suite 325
Houston, Texas 77034
281/484-7000 Fax 281/484-7272
hughjr@hughlandrum.com

Commission:

Blas Coy
TCEQ Office of Public Interest Counsel (MC 103)
P. O. Box 13087
Austin, Texas 78711-3087
512/239-6363 Fax 512/239-6377

Docket Clerk
TCEQ Office of the Chief Clerk (MC 105)
P. O. Box 13087
Austin, Texas 78711-3087
512/239-3300 Fax 512/239-3311

Attachment G

Bryan W. Shaw, Ph.D., *Chairman*
Carlos Rubinstein, *Commissioner*
Toby Baker, *Commissioner*
Zak Covar, *Executive Director*

TEXAS COMMISSION ON ENVIRONMENTAL QUALITY

Protecting Texas by Reducing and Preventing Pollution

June 29, 2012

To: Persons on the attached service list (by mail and facsimile as indicated)

Re: Request for remand of Prop 2 Use Determination Application Nos. 07-11914, 07-11966, 07-11971, 07-11969, 07-11994, and 07-11926 submitted under TCEQ Docket Nos. 2008-0830-MIS-U; 2008-0831-MIS-U; 2008-0832-MIS-U; 2008-0849-MIS-U; 2008-0850-MIS-U; and 2008-0851-MIS-U.

On June 18, 2012, the Executive Director (ED) filed a request (served on each of the parties for the respective use determination appeals) under 30 TAC § 17.25(d) for remand of the following use determination applications for further processing:

- Application No. 07-11914, Tenaska Gateway Partners, Ltd, Rusk County (TCEQ Docket No. 2008-0830-MIS-U);
- Application No. 07-11966, Freestone Power Generation, L.P., Freestone County (TCEQ Docket No. 2008-0831-MIS-U);
- Application No. 07-11971, Borger Energy Associates, L.P., Hutchinson County (TCEQ Docket No. 2008-0832-MIS-U);
- Application No. 07-11969, Brazos Valley Energy Center, L.P., Fort Bend County (TCEQ Docket No. 2008-0849-MIS-U);
- Application No. 07-11994, Freeport Energy Center, L.P., Brazoria County (TCEQ Docket No. 2008-0850-MIS-U); and
- Application No. 07-11926, Navasota Wharton Energy Partners, L.P., Wharton County (TCEQ Docket No. 2008-0851-MIS-U).

Section 17.25(d) provides that "the general counsel may remand a matter from the commission's agenda to the executive director if the executive director ... requests a remand." Pursuant to 30 TAC § 17.25(d), this letter grants the ED's request to remand the above-listed applications to the ED for further processing. The General Counsel notes that any revised use determination that may subsequently be issued by the ED will be subject to the appeals process set forth in § 17.25 of the Commission's rules.

If you have any questions about this matter, please contact Jim Rizk, Assistant General Counsel, at 512/239-5530.

Very truly yours,

Les Trobman
General Counsel

Mailing List

Mailing List
Prop 2 Use Determination Application
Nos. 07-11914, 07-11966, 07-11971, 07-11969, 07-11994, and 07-11926
TCEQ Docket Nos. 2008-0830-MIS-U; 2008-0831-MIS-U; 2008-0832-MIS-U; 2008-0849-MIS-U; 2008-0850-MIS-U; and 2008-0851-MIS-U

Terry W. Decker, RRP/CTA/RTA
Chief Appraiser
Rusk County Appraisal District
P.O. Box 7
Henderson, Texas 75653-0007
903/657-3578 FAX 903/657-9073
tdecker@ruskcad.org

Bud Black, RPA/CTA
Chief Appraiser
Freestone Central Appraisal District
218 North Mount Street
Fairfield, Texas 75840
903/389-5510 FAX 903/389-5955
general.info@freestoncad.org

Diana Hooks, RPA/RTA
Chief Appraiser
Hutchinson County Appraisal District
P.O. Box 5065
Borger, Texas 79008-5065
806/274-2294 FAX 806/273-3400
hcad3@amaonline.com

Glen Whitehead, RPA
Chief Appraiser
Fort Bend County Central Appraisal District
2801 B. F. Terry Blvd.
Rosenberg, Texas 77471-5600
281/344-8623 FAX 281/762-9666
glenwhitehead@fbcad.org

Cheryl Evans
Chief Appraiser
Brazoria County Appraisal District
500 North Chenango Street
Angleton, Texas 77515
979/849-7792 FAX 979/849-7984
bcad@brazoriacad.org

Tylene Gamble
Chief Appraiser
Wharton County Appraisal District
308 East Milam Street
Wharton, Texas 77488-4918
979/532-8931 FAX 979/532-5691
whartoncad@sbcglobal.net

Pritchard & Abbott, Inc.
Attn: Mr. C. Wayne Frazell
4900 Overton Commons Court
Fort Worth, Texas 76132-3687
817/926-7861 FAX 817/927-5314
wfrazell@pandai.com

David D. Johnson
Tenaska Gateway Partners, Ltd.
1044 N 115th St., Suite 400
Omaha, Nebraska 68154-4446
402/691-9500 FAX 402/691-9226

Freestone Power Generation, L.P.
717 Texas, Suite 1000
Houston, Texas 77002

Borger Energy Associates, L.P.
7001 Boulevard 26, Suite 310
North Richland Hills, Texas 76180

Brazos Valley Energy, L.P.
717 Texas, Suite 1000
Houston, Texas 77002

Freeport Energy Center, L.P.
4100 Underwood Road
Pasadena, Texas 77507

Navasota Wharton Energy Partners LP
403 Corporate Woods
Magnolia, Texas 77354

Greg Maxim
Dennis Deegear
Duff & Phelps LLC
919 Congress Ave., Suite 1450
Austin, Texas 78701
512/671-5580 FAX 512/671-5501
gregrory.maxim@duffandphelps.com
dennis.deegar@duffandphelps.com

Justin Hyland
Leo Scherrer
717 Texas Avenue
Houston, Texas 77002
713/830-8873 FAX 713/830-8670
hylandj@calpine.com
lscherrer@dow.com

Hugh L. Landrum & Associates
Attn: Mr. Hugh L. Landrum, Jr.
12621 Featherwood, Suite 325
Houston, Texas 77034
281/484-7000 FAX 281/484-7272
hughjr@hughlandrum.com

Daniel Long
TCEQ Environmental Law Division MC 173
P.O. Box 13087
Austin, Texas 78711-3087
512/239-0600 FAX 512/239-0606

Susana M. Hildebrand, P.E.
TCEQ Chief Engineer's Office MC 168
P.O. Box 13087
Austin, Texas 78711-3087
512/239-4900 FAX 512/239-6188

Chance Goodin
TCEQ Chief Engineer's Office MC 206
P.O. Box 13087
Austin, Texas 78711-3087
512/239-6335 FAX 512/239-6188

Robert Martinez
TCEQ Environmental Law Division MC 173
P.O. Box 13087
Austin, Texas 78711-3087
512/239-0600 FAX 512/239-0606

Blas Coy
TCEQ Office of Public Interest Counsel MC 103
P.O. Box 13087
Austin, Texas 78711-3087
512/239-6363 FAX 512/239-6377

Docket Clerk
TCEQ Office of Chief Clerk MC 105
P.O. Box 13087
Austin, Texas 78711-3087
512/239-3300 FAX 512/239-3311

Attachment H

Bryan W. Shaw, Ph.D., *Chairman*
Carlos Rubinstein, *Commissioner*
Toby Baker, *Commissioner*
Zak Covar, *Executive Director*

TEXAS COMMISSION ON ENVIRONMENTAL QUALITY

Protecting Texas by Reducing and Preventing Pollution

July 10, 2012

Mr. Greg Maxim
Director
Duff and Phelps, LLC
919 Congress Ave Ste 1450
Austin, Texas 78701

Re: Notice of Negative Use Determination
Navasota Wharton Energy Partners, LP
Colorado Bend Energy Center
3821 S. State Hwy 60
Wharton (Wharton County)
Application Number: 07-11926; Tracking Number: DPCOBendB

Dear Mr. Maxim:

This letter responds to Navasota Wharton Energy Partners, LP's Application for Use Determination for the Colorado Bend Energy Center, remanded to the executive director on June 29, 2012, pursuant to the Texas Commission on Environmental Quality's (TCEQ) Tax Relief for Pollution Control Property Program

The TCEQ has completed the review for application #07-11926 and has issued a Negative Use Determination for the property in accordance with Title 30 Texas Administrative Code (TAC) §17.4 and §17.6. Heat recovery steam generators are used solely for production and, therefore, are not eligible for a positive use determination.

Please be advised that a Negative Use Determination may be appealed. The appeal must be filed with the TCEQ Chief Clerk within 20 days after the receipt of this letter in accordance with 30 TAC §17.25.

If you have questions regarding this letter or need further assistance, please contact Ronald Hatlett of the Tax Relief for Pollution Control Property Program by telephone at (512) 239-6348, by e-mail at ronald.hatlett@tceq.texas.gov, or write to the Texas Commission on Environmental Quality, Tax Relief for Pollution Control Property Program, MC-110, P.O. Box 13087, Austin, Texas 78711-3087.

Sincerely,

Chance Goodin, Team Leader
Stationary Source Programs
Air Quality Division

CG/RH

cc: Chief Appraiser, Wharton County Appraisal District, 308 E. Milam St., Wharton, Texas 77488-4918

Attachment J

Bryan W. Shaw, Ph.D., *Chairman*
Carlos Rubinstein, *Commissioner*
Toby Baker, *Commissioner*
Zak Covar, *Executive Director*

TEXAS COMMISSION ON ENVIRONMENTAL QUALITY

Protecting Texas by Reducing and Preventing Pollution

July 10, 2012

Mr. Greg Maxim
Director
Duff and Phelps, LLC
919 Congress Ave Ste 1450
Austin, Texas 78701

Re: Notice of Negative Use Determination
Navasota Wharton Energy Partners, LP
Colorado Bend Energy Center
3821 S. State Hwy 60
Wharton (Wharton County)
Application Number: 07-11926; Tracking Number: DPCOBendB

Dear Mr. Maxim:

This letter responds to Navasota Wharton Energy Partners, LP's Application for Use Determination for the Colorado Bend Energy Center, remanded to the executive director on June 29, 2012, pursuant to the Texas Commission on Environmental Quality's (TCEQ) Tax Relief for Pollution Control Property Program

The TCEQ has completed the review for application #07-11926 and has issued a Negative Use Determination for the property in accordance with Title 30 Texas Administrative Code (TAC) §17.4 and §17.6. Heat recovery steam generators are used solely for production and, therefore, are not eligible for a positive use determination.

Please be advised that a Negative Use Determination may be appealed. The appeal must be filed with the TCEQ Chief Clerk within 20 days after the receipt of this letter in accordance with 30 TAC §17.25.

If you have questions regarding this letter or need further assistance, please contact Ronald Hatlett of the Tax Relief for Pollution Control Property Program by telephone at (512) 239-6348, by e-mail at ronald.hatlett@tceq.texas.gov, or write to the Texas Commission on Environmental Quality, Tax Relief for Pollution Control Property Program, MC-110, P.O. Box 13087, Austin, Texas 78711-3087.

Sincerely,

Chance Goodin, Team Leader
Stationary Source Programs
Air Quality Division

CG/RH

cc: Chief Appraiser, Wharton County Appraisal District, 308 E. Milam St., Wharton, Texas 77488-4918

Attachment K

Pre-Repowering Efficiency and Air Emissions Unit 1

FACILITY_NAME	UNITID	OP_YEAR	HEAT_INPUT	NOX_RATE lbs/MMBTU	NOX_MASS TONs	Gross Load (MW-H)	CO2 Tons	Operating Hours	NOX TONS/MW-HR
Barney M. Davis	1	2003	9,882,095	0.14	814.4	923,389	611,010.3	8,398	0.0009
Barney M. Davis	1	2004	1,365,091	0.1	115.4	115,931	81,133.3	1,273	0.0010
Barney M. Davis	1	2005	4,018,371	0.13	343.1	363,700	238,809.6	3,423	0.0009
Barney M. Davis	1	2006	3,861,536	0.12	319.8	361,211	229,487.0	2,820	0.0009
Barney M. Davis	1	2007	1,815,633	0.15	198.3	173,553	107,904.3	1,658	0.0011
Barney M. Davis	1	2008	4,749,542	0.13	420.8	436,979	282,257.8	3,852	0.0010
Barney M. Davis	1	2009	3,199,412	0.15	332.1	315,615	190,145.3	2,112	0.0011
Barney M. Davis	1	2010	660,763	0.1	48.3	53,988	39,255.9	843	0.0009
Barney M. Davis	1	2011	1,906,567	0.1	131	162,795	113,303.8	1,761	0.0008
Barney M. Davis	1	2012	1,674,769	0.012	138.1	138,581	99,528.2	1,494	0.0010

Pre-Repowering Efficiency and Air Emissions Unit 2

FACILITY_NAME	UNITID	OP_YEAR	HEAT_INPUT	NOX_RATE lbs/MMBTU	NOX_MASS TONs	Gross Load (MW-H)	CO2 Tons	Operating Hours	NOX TONS/MW-HR
Barney M. Davis	2	2003	2,094,717	0.1	152.7	189,000	131,053.6	1,606	0.0008
Barney M. Davis	2	2004	11,922,584	0.12	837.6	1,070,886	708,543.8	7,750	0.0008
Barney M. Davis	2	2005	6,256,894	0.11	388.7	516,358	371,836.8	5,580	0.0008
Barney M. Davis	2	2006	2,965,995	0.15	280.5	233,671	176,265.6	1,763	0.0012
Barney M. Davis	2	2007	1,339,322	0.09	82.8	120,870	79,592.2	1,060	0.0007
Barney M. Davis	2	2008	3,419,274	0.15	294.4	312,553	203,201.2	2,679	0.0009

Post-Repowering Efficiency and Air Emissions BMD Units 3, 4 & NB Units 8, 9

FACILITY_NAME	UNITID	OP_YEAR	HEAT_INPUT	NOX_RATE lbs/MMBTU	NOX_MASS TONs	Gross Load (MW-H)	CO2 Tons	Operating Hours	NOX TONS/MW-HR
Barney M. Davis	3	2011	8,264,568	0.03	73.3	1,064,646	491,149.8	5637	0.0001
Barney M. Davis	3	2012	5,289,883	0.02	40.1	687,398	314,371.3	3524	0.0001
Barney M. Davis	4	2011	8,092,698	0.03	68.9	1,081,929	480,942.4	5742	0.0001
Nueces Bay	8	2011	7,989,948	0.02	36.3	663,495	293,764.0	3425	0.0001
Nueces Bay	8	2012	5,011,986	0.02	52.7	1,093,549	474,830.6	5692	0.0000
Nueces Bay	9	2011	7,978,245	0.02	30	687,430	297,856.4	3517	0.0000
Nueces Bay	9	2012	5,117,020	0.02	45.5	1,092,722	474,132.6	5558	0.0000
				0.02	29.5	698,703	304,095.0	3545	0.0000

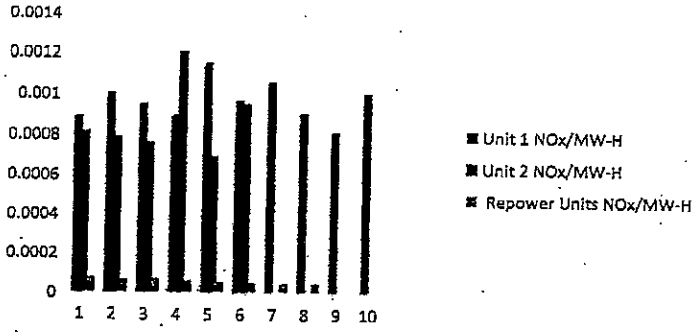
0.0014
0.0012
0.001
0.0008
0.0006
0.0004
0.0002
0
1 2 3 4 5 6 7 8 9 10
Unit 1 NOx/MW-H
Unit 2 NOx/MW-H
Repower Units NOx/MW-H

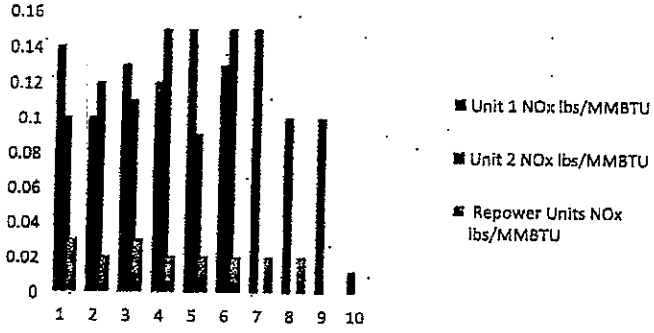
0.16
0.14
0.12
0.1
0.08
0.06
0.04
0.02
0
1 2 3 4 5 6 7 8 9 10
Unit 1 NOx lbs/MMBTU
Unit 2 NOx lbs/MMBTU
Repower Units NOx lbs/MMBTU

TCEQ DOCKET NO. 2008-0851-MIS-U

APPEAL OF THE EXECUTIVE DIRECTOR'S POSITIVE USE DETERMINATION ISSUED TO NAVASOTA WHARTON ENERGY PARTNERS LP (07-11926)	§ § § § §	TEXAS COMMISSION ON ENVIRONMENTAL QUALITY

APPLICANT CER-COLORADO BEND ENERGY LLC'S REQUEST FOR REVERSAL OF THE REMAND OF THE POSITIVE USE DETERMINATION ISSUED TO NAVASOTA WHARTON ENERGY PARTNERS LP

CHIEF CLERKS OFFICE 2012 JUL 31 PM 4:30 TEXAS COMMISSION ON ENVIRONMENTAL QUALITY

CER-Colorado Bend Energy LLC (formerly known as Navasota Wharton Energy Partners LP) ("Applicant") files this Request for Reversal of the Texas Commission on Environmental Quality ("TCEQ" or "Commission") General Counsel's June 29, 2012 remand of the positive use determination issued by the Executive Director to the Applicant on May 1, 2008. For the reasons articulated below, the Applicant respectfully requests that the Commission reverse the General Counsel's decision to remand the May 1, 2008 positive use determination to the Executive Director and take up for the first time the previously pending appeal of that Positive Use Determination consistent with the requirements of Section 11.31(e) of the Texas Tax Code

Part I of this brief provides a short background of the Pollution Control Property Program; Part II illustrates the irregular procedural background of the application and subsequent appeal; and Part III details the Applicant's argument why the General Counsel's remand of the matter was not lawful under the applicable provisions of the Texas Tax Code. To preserve its rights under applicable law, Applicant is filing under separate cover an appeal of the Negative Use Determination sent on July 10, 2012. However, because Applicant believes that its prior positive use determination was not properly disposed of on appeal, we file this Request for Reversal.

I. Program Background

On November 2, 1993, Texans approved Proposition 2 amending the Texas Constitution to provide tax relief for pollution control property. This amendment added §1-1 to the Texas Constitution, Article VIII, which states:

> (a) The legislature by general law may exempt from ad valorem taxation all or part of real and personal property used, constructed, acquired, or installed wholly or partly to meet or exceed rules or regulations adopted by any environmental protection agency of the United States, this state, or a political subdivision of this state for the prevention, monitoring, control, or reduction of air, water, or land pollution.

(b) This section applies to real and personal property used as a facility, device, or method for the control of air, water, or land pollution that would otherwise be taxable for the first time on or after January 1, 1994.

In response to the constitutional amendment, the Texas Legislature added Texas Tax Code, §11.31, Pollution Control Property ("§11.31"). The statute establishes a process where applicants submit Applications for Use Determination to the Executive Director of the TCEQ to determine whether the property is used wholly or in part for pollution control. The Executive Director's role is limited by § 11.31 to the specific task of conducting a technical evaluation to determine whether the equipment is used wholly or partly for the control of air, water, or land pollution, and does not include any evaluation of the merit of the tax exemption itself or tax policy implications of granting positive or negative use determinations.

In 2001, the Legislature passed House Bill 3121, which amended §11.31. These amendments included providing a process for appealing the Executive Director's use determinations. House Bill 3121 also required the Commission to adopt rules that establish specific standards for the review of applications that ensure determinations are equal and uniform, and to adopt rules to distinguish the proportion of property that is used to control pollution from the proportion that is used to produce goods or services.

In 2007, §11.31 was amended again with the passage of House Bill 3732, which required the Commission to adopt a list of equipment that is considered pollution control property, including the equipment listed in §11.31(k). In adopting rules for the implementation of House Bill 3732, the TCEQ created a Tier IV application for the categories of listed equipment. For Tier IV applications, the Executive Director must determine the proportion of the equipment used for pollution control and the proportion that is used for production. The application that is the subject of this appeal is a Tier IV application.

II. Brief Procedural Background

On March 19, 2008, the Applicant filed a Tier IV Application for Use Determination for Pollution Control Property with the Executive Director for four Heat Recovery Steam Generators ("HRSGs") and two steam turbines (See Attachment A). The Executive Director conducted a technical review of the application and on May 1, 2008 issued a 100 percent positive use determination for the four HRSGs, stating that "[t]his equipment is considered to be pollution control equipment and was installed to meet or exceed federal or state regulations." (See Attachment B). Subsequently, on May 19, 2008, Wharton County Appraisal District filed an appeal of the Executive Director's use determination, claiming that the HRSGs "are production equipment in that they burn natural gas to create steam to generate electricity." (See Attachment C).

The Executive Director has received approximately thirty-eight similar applications for HRSGs and steam turbines installed at combined-cycle electric generation facilities. The Executive Director issued 100 percent positive use determinations for twenty-six of the HRSG applications. Of the twenty-six positive use determinations, six were appealed by appraisal districts.

The appeal of the May 1, 2008 positive use determination and the five other similarly situated positive use determinations were scheduled to appear on the Commission's Agenda to be held on February 25, 2009. However, on February 23, 2009, two days prior to the Agenda, the Executive Director filed with the TCEQ's General Counsel a Motion for Continuance to "allow the Executive Director more time to evaluate its current recommendation." (See Attachment D). In response to the Executive Director's motion, the General Counsel chose to continue the matter "indefinitely." (See Attachment E).

On June 18, 2012, almost three and a half years after the Commission indefinitely continued the matter on its Agenda, the Executive Director requested that the General Counsel remand the six appealed used determinations back to the Executive Director for "further processing." (See Attachment F). On June 29, 2012, before the Commission had taken up the original appeal of the positive use determination, the General Counsel remanded the matter back to the Executive Director. (See Attachment G). In less than two weeks, on July 10, 2012, the Executive Director issued a new use determination, stating that "[h]eat recovery steam generators are used solely for production and, therefore, are not eligible for a positive use determination." (See Attachment H).

III. Basis for Reversal of Remand

1. The General Counsel's Remand of the Use Determination is a Violation of the Statutory Provisions of Texas Tax Code § 11.31.

Texas Tax Code § 11.31(e) outlines a unique appeals process for a person challenging use determinations made by the TCEQ's Executive Director. This appeals process is unlike any other procedure for appealing a TCEQ decision and includes a specific sequence of administrative steps the agency must follow in considering and processing those appeals. After describing the requirements for filing an appeal, Section 11.31(e) states that "[t]he commission shall consider the appeal at the next regularly scheduled meeting of the commission for which adequate notice may be given." (emphasis added). This section is unambiguous and leaves no doubt that the Commission must consider any use determinations made by the Executive Director at the next possible Agenda, unless adequate notice of the appeal cannot be given. The Commission's rules also state that the Chief Clerk "shall schedule the appeal for consideration at the next regularly scheduled commission meeting for which adequate notice can be given." (30 TAC §17.25(c)(3)).

Section 11.31(e) adds that "[t]he Commission may remand the matter to the executive director for a new determination or deny the appeal and affirm the executive director's determination." Thus the Commission is not only required to consider the matter at the next Agenda meeting, but the Commission must vote to determine whether to affirm the appeal and remand the matter to the Executive Director or deny the appeal and affirm the original use determination. These two courses of action are the only two the Commission may take and the statute does allow for either of them to be delegated to the General Counsel.

The General Counsel's letter remanding the matter back to the Executive Director indicates that it is authorized to remand the letter to the Executive Director under 30 TAC §

17.25(d).. Such an application of Section 17.25(d) in this case contradicts the plain language of the Texas Tax Code.

It is evident that there is a direct conflict between the provisions of Texas Tax Code § 11.31(e) and the General Counsel's use of 30 TAC § 17.25(d) in this case. One undisputed premise of administrative law is that a rule promulgated by a state agency must be consistent with the statutory provisions authorizing the agency to adopt rules to implement the statute. Under Texas Tax Code § 11.31(e), there is only one possible way that a use determination can be remanded back to the Executive Director after an appeal - the Commission must consider the matter at an Agenda meeting and vote to either 1) deny the appeal and approve the use determination or 2) remand the matter to the Executive Director.

The General Counse relied on Section 17.25(d) to remand the May 1, 2008 use determination to the Executive Director upon the Executive Director's request without any process before the Commissioners. This functionally made the General Counsel, instead of the Commissioners, the arbiter of whether Wharton County Appraisal District's appeal was granted. Just as it would have been inappropriate for the General Counsel to deny that appeal, it was inappropriate for him to grant it, which is what he did when he remanded the May 1, 2008 positive use determination.

2. By Remanding the Use Determination Under 30 TAC 17.25(d), the General Counsel Retroactively Applied an Agency Rule to an Application that was Submitted Before 30 TAC § 17.25(d) was Adopted.

As discussed above, the Tax Code mandates that the Commissioners, not the General Counsel, act on pending appeals of use determinations. However, even if 30 TAC § 17.25(d) could be applied as the General Counsel applied it here without violating the Tax Code, the General Counsel's reliance on the rule is an impermissible retroactive application of a rule that impacts substantive rights.

30 TAC § 17.25(d) was not adopted until December 13, 2010. Thus, the section of the Administrative Code upon which the General Counsel relies upon in support of the June 29 Remand was not effective until after Navasota submitted its Application for Use Determination, after the Executive Director issued its 100 percent use determination, and after the Wharton County Appraisal District appealed that use determination. In fact, Section 17.25(d) was not added to the Administrative Code until after the General Counsel indefinitely continued the matter before the Commission.

Under Texas law, the retroactive application of statutes and rules is strongly disfavored. Article 1, Section 16 of the Texas Constitution specifically prohibits retroactive laws. Texas Government Code § 311.022 states that a "statute is presumed to be prospective in its operation unless expressly made retrospective." The same general principles apply for agency rules.[1]

[1] *See R.R. Comm'n v. Lone Star Gas Co.*, 656 S.W.2d 421, 425 (Tex. 1983).

Although the retroactive application of rules is considered permissible under Texas law when only procedural rights are affected, much more is at stake here. In this case, the Applicant is entitled to a statutorily-mandated process that is designed to protect substantive rights stemming from the underlying use determination. The financial consequences of losing a positive use determination are significant, especially on equipment as valuable as involved in this case. Rather than being able to financially plan based on a timely disposition of the May 19, 2008 appeal, Applicant was left in limbo for over four years and then, in a matter of a few days, was stripped of its 100 percent positive use determination and handed a complete reversal without any involvement of the one body the Tax Code charges with ruling on appeals - the Commissioners. The effect of the retroactive application of this so-called procedural rule is far too substantive to withstand scrutiny.

IV. Conclusion

Based on the reasons articulated above, the General Counsel's decision to remand the May 1, 2008 positive use determination violated Texas Tax Code § 11.31. The Tax Code requires the Commission to consider appeals of use determinations and does not permit them to delegate that important role to the General Counsel. The rule relied upon by the General Counsel to justify the June 29, 2012 remand not only conflicts with the Tax Code, but cannot be retroactively applied in the manner proposed given the substantive impact of that application. Applicant request that the Remand be reversed and for the Commission to consider the original positive use determination as required by the Tax Code.

Respectfully submitted,

Michael J. Nasi
State Bar No. 00791335
Steve Moore
State Bar No. 14377320
Benjamin Rhem
State Bar No. 24065967

JACKSON WALKER L.L.P.
100 Congress Avenue, Suite 1100
Austin, Texas 78701
512-236-2200
512-236-2002 (Facsimile)
mnasi@jw.com

ATTORNEYS FOR CER-COLORADO BEND ENERGY LLC

CERTIFICATE OF SERVICE

I hereby certify that on the 31st day of July, 2012, a copy of the foregoing was provided by hand delivery, electronic mail or U.S. First Class Mail to the attached mailing list:

for Michael J. Nasi

Mailing List
Prop 2 Use Determination Application No. 07-11926
TCEQ Docket No. 2008-0851-MIS-U

Tylene Gamble
Chief Appraiser
Wharton County Appraisal District
308 East Milam Street
Wharton, Texas 77488-4918
979/532-8931 FAX 979/532-5691
whartoncad@sbcglobal.net

Greg Maxim
Dennie Deegear
Duff & Phelps, LLC
919 Congress Avenue, Suite 1450
Austin, Texas 78701
512/671-5580 Fax 512/671-5501
Gregory.maxim@duffandphelps.com
dennis.deegar@duffandphelps.com

Daniel Long
Texas Environmental Law Division MC 173
P. O. Box 13087
Austin, Texas 78711-3087
512/239-0600 FAX 512/239-0606

Susana M. Hildebrand, P.E.
TCEQ Chief Engineer's Office MC 168
P. O. Box 13087
Austin, Texas 78711-3087
512/239-4900 FAX 512/239-6188

Chance Goodin
TCEQ Chief Engineer's Office MC 206
P. O. Box 13087
Austin, Texas 78711-3087
512/239-6336 FAX 512/239-6188

Robert Martinez
TCEQ Environmental Law Division MC 173
P. O. Box 13087
Austin, Texas 78711-3087
512/239-0600 FAX 512/239-0606

Blas Coy
TCEQ Office of Public Interest Counsel
MC 103
P. O. Box 13087
Austin, Texas 78711-3087
512/239-6363 FAX 512/239-6377

Docket Clerk
TCEQ Office of Chief Clerk MC 105
P. O. Box 13087
Austin, Texas 78711-3087
512/239-3300 FAX 512/239-3311

Attachment A

TEXAS COMMISSION ON ENVIRONMENTAL QUALITY
APPLICATION FOR USE DETERMINATION
FOR POLLUTION CONTROL PROPERTY

The TCEQ has the responsibility to determine whether a property is a pollution control property. A person seeking a use determination for pollution control property must complete the attached application or use a copy or similar reproduction. For assistance in completing this form refer to the TCEQ guidelines document, *Property Tax Exemptions for Pollution Control Property*, as well as 30 TAC §17, rules governing this program. For additional assistance please contact the Tax Relief for Pollution Control Property Program at (512) 239-3100. The application should be completed and mailed, along with a complete copy and appropriate fee, to: TCEQ MC-214, Cashiers Office, P.O. Box 13088, Austin, Texas 78711-3088.

1. GENERAL INFORMATION

A. What is the type of ownership of this facility?

- ☐ Corporation
- ☐ Sole Proprietor
- ☐ Partnership
- ☐ Utility
- ☑ Limited Partnership
- ☐ Other

B. Size of company: Number of Employees

- ☑ 1 to 99
- ☐ 1,000 to 1,999
- ☐ 100 to 499
- ☐ 2,000 to 4,999
- ☐ 500 to 999
- ☐ 5,000 or more

C. Business Description: **Electricity Manufacturing (SIC 4911)**

2. TYPE OF APPLICATION

- ☐ **Tier I $150 Application Fee**
- ☐ **Tier II $1,000 Application Fee**
- ☐ **Tier III $2,500 Application Fee**
- ☑ **Tier IV $500 Application Fee**

NOTE: Enclose a check, money order to the TCEQ, or a copy of the ePay receipt along with the applicaton to cover the required fee.

3. NAME OF APPLICANT

A. Company Name: Navasota Wharton Energy Partners LP

B. Mailing Address (Street or P.O. Box): 403 Corporate Woods

C. City, State, ZIP: Magnolia, TX 77354

4. PHYSICAL LOCATION OF PROPERTY REQUESTING A TAX EXEMPTION

A. Name of facility: Colorado Bend

B. Type of Mfg Process or Service: Electricity Manufacturing (SIC 4911)

C. Street Address: 3821 S. State Hwy 60

D. City, State, ZIP: Wharton, TX 77488

E. Tracking Number Assigned by Applicant: DPCOBend B

F. Customer Number or Regulated Entity Number: N/A

5. APPRAISAL DISTRICT WITH TAXING AUTHORITY OVER PROPERTY

A. Name of Appraisal District: Wharton

B. Appraisal District Account Number: 10258-000-000-00; 10-20500000-0200-67099; 20063-000-055-00

Replacement
~~07-12209~~ 07-11926

6. CONTACT NAME (must be provided)

A. Company/Organization Name:	Duff and Phelps LLC
B. Name of Individual to Contact:	Greg Maxim
C. Mailing Address:	919 Congress Ave. Suite 1450
D. City, State, ZIP:	Austin, TX 78701
E. Telephone number and fax number:	(512) 671-5580 Fax (512) 671-5501
F. E-Mail address (if available):	gregory.maxim@duffandphelps.com

7. RELEVANT RULE, REGULATION, OR STATUTORY PROVISION

Please reference Section 8. Each item is detailed with the proper statute, regulation, or environmental regulatory provision.

8. DESCRIPTION OF PROPERTY

Background

The Colorado Bend Energy Center (the "Facility"), owned by Navasota Wharton Energy Partners LP, is a combined cycle natural-gas fired power plant located in Wharton, Wharton County, Texas. The Facility is intended to have a total capacity of 825 Mw, built in three phases. Phase has a capacity of 275 Mw and was completed in June of 2007. Phase 2, currently under construction, is to be completed in June of 2008 and will also have a 275 Mw capacity. Each phase consists of 2 GE 7-EA combustion turbine units utilizing the GE Dry Low NOx combustion control system technology, 2 heat recovery steam generating (HRSG) units, and one steam turbine unit. The Facility utilizes a cooling tower within the circulating water system for condenser cooling water needs and condensate return purposes.

Overview of Combined Cycle Technology

The Facility consists of a combined-cycle gas turbine power plant with gas Combustion Turbines ("CTs") equipped with heat recovery steam generators to capture heat from the gas turbine exhaust. Steam produced in the heat recovery steam generators powers a steam turbine generator(s) to produce additional electric power. Use of the otherwise wasted heat in the turbine exhaust gas results in higher plant thermal efficiency compared to other combustion technologies. Combined-cycle plants currently entering service can convert approximately 50% of the chemical energy of natural gas into electricity (HHV basis).

The Rankine cycle is a thermodynamic cycle that converts heat from an external source into work. In a Rankine cycle, external heat from an outside source is provided to a fluid in a closed-loop system. This fluid, once pressurized, converts the heat into work output using a turbine. The fluid most often used in a Rankine cycle is water (steam) due to its favorable properties, such as nontoxic and unreactive chemistry, abundance, and low cost, as well as its thermodynamic properties. The thermal efficiency of a Rankine cycle is usually limited by the working fluid. Without pressure reaching super critical the temperature range the

Rankine cycle can operate over is quite small, turbine entry temperatures are typically 565°C (the creep limit of stainless steel) and condenser temperatures are around 30°C. This gives a theoretical Carnot efficiency of around 63% compared with an actual efficiency of 42% for a modern coal-fired power station. This low turbine entry temperature (compared with a gas turbine) is why the Rankine cycle is often used as a bottoming cycle in combined cycle gas turbine power stations.

The Brayton cycle is a constant pressure thermodynamic cycle that converts heat from combustion into work. A Brayton engine, as it applies to a gas turbine system, will consist of a fuel or gas compressor, combustion chamber, and an expansion turbine. Air is drawn into the compressor, mixed with the fuel, and ignited. The resulting work output is captured through a pump, cylinder, or turbine. A Brayton engine forms half of a combined cycle system, which combines with a Rankine engine to further increase overall efficiency. Cogeneration systems typically make use of the waste heat from Brayton engines, typically for hot water production or space heating.

By combining both gas and steam cycles, high input temperatures and low output temperatures can be achieved. The efficiency of the cycles are additive, because they are powered by the same fuel source. A combined-cycle plant has a thermodynamic cycle that operates between the gas turbine's high firing temperature and the waste heat temperature from the condensers of the steam cycle. This large range means that the Carnot efficiency of the cycle is high. The actual efficiency, while lower than this is still higher than that of either plant on its own. The thermal efficiency of a combined-cycle power plant is the net power output of the plant divided by the heating value of the fuel. If the plant produces only electricity, efficiencies of up to 59% can be achieved.

A single-train combined-cycle plant consists of one gas turbine generator, a heat recovery steam generator (HSRG) and a steam turbine generator ("1 x 1" configuration). As an example, an "FA-class" combustion turbine, the most common technology in use for large combined-cycle plants within the state of Texas and other locations throughout the United States, represents a plant with approximately 270 megawatts of capacity.

See Figure 1 – Standard Combined-Cycle Configuration, below.

It is common to find combined-cycle plants using two or even three gas turbine generators and heat recovery steam generators feeding a single, proportionally larger steam turbine generator. Larger plant sizes result in economies of scale for construction and operation, and designs using multiple combustion turbines provide improved part-load efficiency. A 2 x 1 configuration using FA-class technology will produce about 540 megawatts of capacity at International Organization for Standardization ("ISO") conditions. ISO references ambient conditions at 14.7 psia, 59 F, and 60% relative humidity.

Because of high thermal efficiency, high reliability, and low air emissions,

combined-cycle gas turbines have been the new resource of choice for bulk power generation for well over a decade. Other attractive features include significant operational flexibility, the availability of relatively inexpensive power augmentation for peak period operation and relatively low carbon dioxide production.

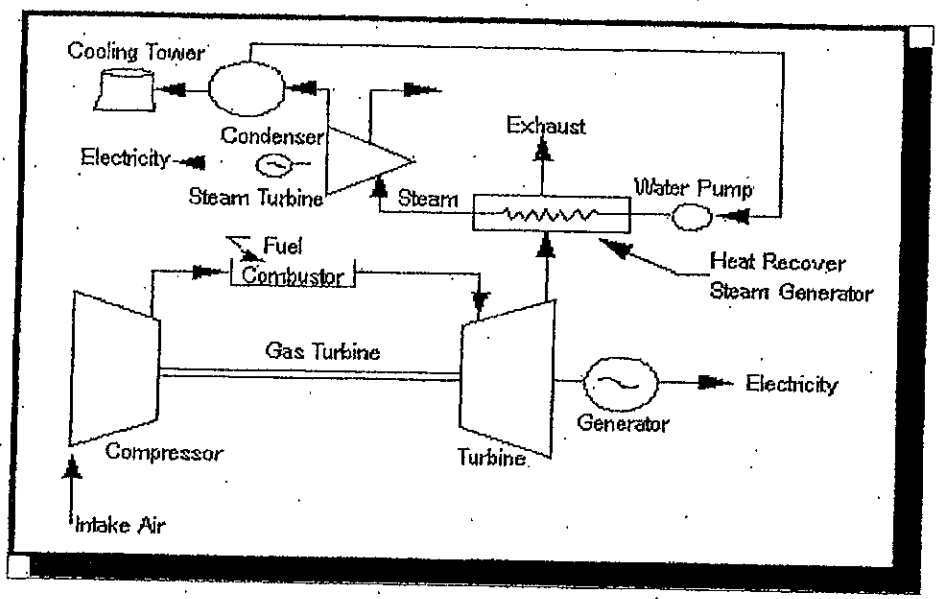

FIGURE 1 - Standard Combined-Cycle Configuration (1)

As an example, consider a gas turbine cycle that has an efficiency of 40%, which is a representative value for current Brayton Cycle gas turbines, and the Rankine Cycle has an efficiency of 30%. The combined-cycle efficiency would be 58%, which is a very large increase over either of the two simple cycles. Some representative efficiencies and power outputs for different cycles are shown in Figure 2 – Comparison of Efficiency and Power Output of Various Power Products, below.

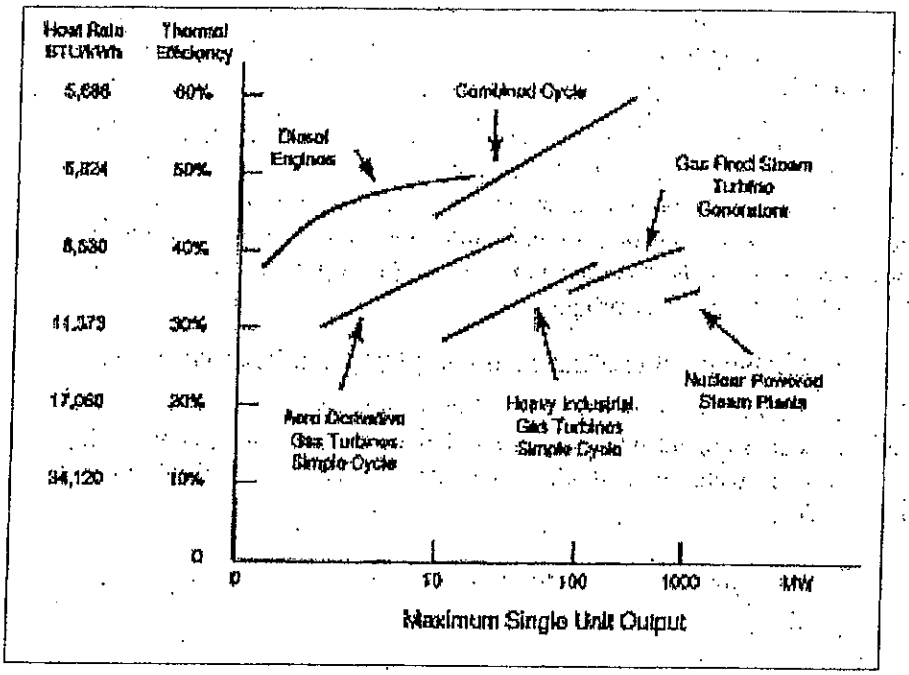

FIGURE 2 - Comparison of efficiency and power output of various power products [Bartol (1997)] (2)

Current Regulatory Authority for Output-Based Emissions

Innovative power technologies such as combined-cycle technology offer enormous potential to improve efficiency and enhance the environmental footprint of power generation through the reduction and/or prevention of air emissions to the environment. Currently, two thirds of the fuel burned to generate electricity in traditional fossil-fired steam boilers is lost. Traditional U.S. power generation facility efficiencies have not increased since the 1950s and more than one fifth of the U.S. power plants are more than 50 years old. In addition, these facilities are the leading contributors to U.S. emissions of carbon dioxide, NOx, sulfur dioxide ("SO2"), and other contaminants into the air and water.

The ability to recognize and regulate the efficiency benefits of pollution reduction and/or prevention through the use of combined-cycle technology is achieved through the use of Output-Based emissions standards, incorporated since September 1998 within the U.S. EPA's new source performance standards ("NSPS") for NOx, from both new utility boilers and new industrial boilers. Pursuant to section 407(c) of the Clean Air Act in subpart Da (Electric Utility Steam Generating Units) and subpart Db (Industrial-Commercial-Institutional Steam Generating Units) of 40 CFR part 60, the U.S. EPA revised the NOx emissions limits for steam generating units for which construction, modification, or reconstruction commenced after July 9, 1997 (3). Output-Based regulations are also exemplified by those used in the U.S. EPA's NOx Cap and Trade Program for the NOx State Implementation Plan ("SIP") Call

of 1998, which uses units of measure such as lb/MWh generated or lb concentration ("ppm"), which relate to the emissions to the productive output – electrical generation of the process.(4)

The use of innovative technologies such as combined-cycle units reduces fossil fuel use and leads to multi-media reductions in the environmental impacts of the production, processing transportation, and combustion of fossil fuels. In addition, reducing fossil fuel combustion is a pollution prevention measure that reduces emissions of all products of combustion, not just the target pollutant (currently NOx) of a federal regulatory program.

Authority to Expand Pollution Control Equipment & Categories in Texas

Under Texas House Bill 3732 ("HB3732") enacted in 2007, Section 11.31 of the Texas Tax Code is amended to add certain plant equipment and systems to the current list of air, water, or land pollution control devices exempt from property taxation in Texas.

Specifically, the language reads as follows:

SECTION 4. Section 11.31, Tax Code, is amended by adding Subsections (k), (l), and (m) to read as follows:
(k) The Texas Commission on Environmental Quality shall adopt rules establishing a nonexclusive list of facilities, devices, or methods for the control of air, water, or land pollution, which must include:
(1) coal cleaning or refining facilities;
(2) atmospheric or pressurized and bubbling or circulating fluidized bed combustion systems and gasification fluidized bed combustion combined-cycle systems;
(3) ultra-supercritical pulverized coal boilers;
(4) flue gas recirculation components;
(5) syngas purification systems and gas-cleanup units;
(6) enhanced heat recovery systems;
(7) exhaust heat recovery boilers;
(8) heat recovery steam generators;
(9) superheaters and evaporators;
(10) enhanced steam turbine systems;
(11) methanation;
(12) coal combustion or gasification byproduct and coproduct handling, storage, or treatment facilities;
(13) biomass cofiring storage, distribution, and firing systems;
(14) coal cleaning or drying processes, such as coal drying/moisture reduction, air jigging, precombustion decarbonization, and coal flow balancing technology;
(15) oxy-fuel combustion technology, amine or chilled ammonia scrubbing, fuel or emission conversion through the use of catalysts, enhanced scrubbing technology, modified combustion technology such as chemical looping, and cryogenic technology;
(16) if the United States Environmental Protection Agency adopts a final rule or regulation regulating carbon dioxide as a pollutant, property that is used, constructed, acquired, or installed wholly or partly to capture carbon dioxide from an anthropogenic source in this state that is geologically sequestered in this state;
(17) fuel cells generating electricity using hydrogen derived from coal, biomass, petroleum coke, or solid waste; and
(18) any other equipment designed to prevent, capture, abate, or monitor nitrogen oxides, volatile organic compounds, particulate matter, mercury, carbon monoxide, or any criteria pollutant.
(l) The Texas Commission on Environmental Quality by rule shall update the list adopted under Subsection (k) at least once every three years. An item may be removed from the list if the commission finds compelling evidence to support the conclusion that the item does not provide pollution control benefits.
(m) Notwithstanding the other provisions of this section, if the facility, device, or method for the

control of air, water, or land pollution described in an application for an exemption under this section is a facility, device, or method included on the list adopted under Subsection (k), the executive director of the Texas Commission on Environmental Quality, not later than the 30th day after the date of receipt of the information required by Subsections (c)(2) and (3) and without regard to whether the information required by Subsection (c)(1) has been submitted, shall determine that the facility, device, or method described in the application is used wholly or partly as a facility, device, or method for the control of air, water, or land pollution and shall take the actions that are required by Subsection (d) in the event such a determination is made.

Under the TCEQ's recently updated "Tax Relief for Pollution Control Property – Application Instructions and Equipment and Categories List – Effective January 2008", the Equipment and Categories List - Part B ("ECL Part B") is a list of the pollution control property categories adopted and set forth in TTC Sec. 26.045(f). The taxpayer is to supply a pollution control percentage for the equipment listed in Part B via calculations demonstrating pollution control, prevention and/or reductions achieved by the listed equipment or systems.

The following property descriptions outline the environmental purpose, including the anticipated environmental benefit of pollution control additions considered under the Application Instructions' ECL Part B that have been constructed and placed into use at the Facility as of its placed-in-service date, or installed subsequent to in-service since 1994:

Property Descriptions

Item #1 & 3 Combined-Cycle Gas Turbine Plant Heat Recovery Steam Generator ("HRSG") and Support Systems Tier IV B-8

40 CFR Part 60 Subparts DA and DB, NOx Limits for Electric Utility Steam Generating Units and Industrial-Commercial-Institutional Steam Generating Units for New Source Performance Standards ("NSPS").

TAC Rule 106.512, Standard Permit for Electric Generating Units (EGU)

NOTE: Permits issued under Texas Clean Air Act's Health & Safety Code Sections 382.011, applies to all electric generating units that emit air contaminants, regardless of size, and it is to reflect Best Available Control Technology ("BACT") for electric generating units on an output basis in pounds of NOx per megawatt hour, adjusted to reflect a simple cycle power plant.

The heat recovery steam generator ("HRSG") found in the Facility is a heat exchanger that recovers heat from a hot gas stream. It produces steam that can be used in a process or used to drive a steam turbine. A common application for an HRSG is in a combined-cycle power station, where hot exhaust from a gas turbine is fed to an HRSG to generate steam which in turn drives a steam turbine. This combination produces electricity in a more thermally efficient manner than either the gas turbine or steam turbine alone.

The Facility's HRSGs consist of three major components: the Evaporator, Superheater, and Economizer. The different components are put together to meet the operating requirements of the unit. Modular HRSGs normally consist of three sections: an LP (low pressure) section, a reheat/IP (intermediate pressure) section, and an HP (high pressure) section. The reheat and IP sections are separate circuits inside the HRSG. The IP steam partly feeds the reheat section. Each section has a steam drum and an evaporator section where water is converted to steam. This steam then passes through superheaters to raise the temperature and pressure past the saturation point.

Item #2 & 4 Steam Turbine and Support Systems Tier IV B-10

40 CFR Part 60 Subparts DA and DB, NOx Limits for Electric Utility Steam Generating Units and Industrial-Commercial-Institutional Steam Generating Units for New Source Performance Standards ("NSPS").

TAC Rule 106.512, Standard Permit for Electric Generating Units (EGU)

NOTE: Permits issued under Texas Clean Air Act's Health & Safety Code Sections 382.011, applies to all electric generating units that emit air contaminants, regardless of size, and it is to reflect Best Available Control Technology ("BACT") for electric generating units on an output basis in pounds of NOx per megawatt hour, adjusted to reflect a simple cycle power plant.

The steam turbine(s) found in the Facility operate on the Rankine cycle in combination with the Brayton cycle, as described above. Steam created in the Facility HRSG(s) from waste heat that would have otherwise been lost to the atmosphere enters the steam turbine via a throttle valve, where it powers the turbine

and connected generator to make electricity. Use of HRSG/Steam Turbine System combination provides the Facility with an overall efficiency of greater than 50%. Steam turbine systems similar to the Facility's have a history of achieving up to 95% availability on an annual basis and can operate for more than a year between shutdown for maintenance and inspections. (5)

Pollution Control Percentage Calculation: Avoided Emissions Approach

To calculate the percentage of the equipment or category deemed to be pollution control equipment, the Avoided Emissions approach has been used. This approach relies on thermal output differences between a conventional power generation system and the combined-cycle system at the Facility. Specifically, the percentage is determined by calculating the displacement of emissions associated with the Facility's thermal output and subtracting these emissions from a baseline emission rate. These displaced emissions are emissions that would have been generated by the same thermal output from a conventional system.

Greater energy efficiency reduces all air contaminant emissions, including the greenhouse gas, carbon dioxide. Higher efficiency processes include combined-cycle operation and combined heat and power ("CHP") generation. For electric generation the energy efficiency of the process expressed in terms of millions of British thermal units ("MMBTU's") per Megawatt-hour. Lower fuel consumption associated with increased fuel conversion efficiency reduces emissions across the board – that is NOx, SOx, particulate matter, hazardous air pollutants, and greenhouse gas emissions such as CO2.

In calculating the percent exempt for the listed items from the ECL-Part B, we utilized Output-Based NOx allocation method for both power generation projects that replaced existing facilities and "Greenfield" power and heat generation facilities. We looked at the various fossil fuel technologies in use today and chose the baseline facility to be a natural gas fuel-fired steam generator. We benchmarked this conventional generation to the subject natural gas-fired combined cycle generator at the Facility. By doing so, we narrowed the heat rate factors as much as possible to be conservative and uniform in modeling. The benchmark heat rate factor is the following:

Natural Gas fuel-fired Steam Generator: 10,490 BTU's/kWh

This baseline heat rate purposely omits other fossil fuel sources in order to eliminate impurity type characteristics, which in turn eliminated the NOx emission and cost of control differences of each fossil fuel and generator type. Comparing the emissions impact of different energy generation facilities is concise when emissions are measured per unit of useful energy output. For the purpose of our calculations, we converted all the energy output to units of MWh (1 MWh = 3.413 MMBTU), and compared the total emission rate to the baseline facility.

The comparison steps to calculate the NOx reduction is as follows:

Calculation (Reference Schedule A)

Step 1 – Subject Output-Based Limit Calculation (lbs NOx / MWh)

(Input-based Limit (lbs NOx/MMBTU)) X (Heat Rate (Btu/kWh)) / (1,000,000 Btu / 1,000 kWh) = Output: (lbs NOx/MWh),

Step 2 – Subject Output Conversion Calculation (NOx Tons / Year)

(Output (lbs NOx/MWh) X (Unit Design Capacity (MW)) X (Capacity Factor) X ((365 Days) X (24 hrs/day)) / 2,000 lbs = Output: (NOx Tons/Year)

Step 3 – Baseline Output-Based Limit Calculation (lbs NOx / MWh)

(Input-based Limit (lbs NOx/MWh)) X (Heat Rate (Btu/kWh)) / (1,000,000 Btu / 1,000 kWh) = Output: (lbs NOx/MWh)

Step 4 – Baseline Output Conversion Calculation (NOx Tons / Year)

(Output (lbs NOx/MMBtu) X (Unit Design Capacity (MW)) X (Capacity Factor) X ((365 Days) X (24 hrs/day)) / 2,000 lbs = Output: (NOx Tons/Year)

Step 5 – Percent NOx Reduction Calculation

$((\text{Output Baseline})_{\text{step 4}} - (\text{Output Subject}))_{\text{step 2}} / (\text{Output Subject})_{\text{step 2}} = \%$ Reduction Output Subject

Step 6 – Percent Exempt Calculation

(Total Subject Facility Cost) X (% NOx Reduction) = Capital Cost of NOx Avoidance

Step 7 – Percent Exempt Calculation

Total Cost of NOx Avoidance / Total Cost of HB 3732 Equipment = % Exempt

- If % Exempt is greater than 100% HB 3732 Equipment is 100% Exempt
- If % Exempt is less than 100% then HB 3732 Equipment is partially exempt at the Step 6 calculation.

NOTE: See the attached calculation sheet for the details regarding Facility-specific calculations and property tax exemption percentage results based upon these calculations.

REFERENCES

1. "Output-Based Regulations: A Handbook for Air Regulators", U.S. Environmental Protection Agency, Office of Atmospheric Programs – Climate Protection Partnerships Division, August, 2004, p.4.

2. "Output-Based Emissions Standards; Advancing Innovative Energy Technologies", Northeast-Midwest Institute; 2003, p. 9.

3. IBID, p.13.

4."Output-Based Regulations: A Handbook for Air Regulators", U.S. Environmental Protection Agency, Office of Atmospheric Programs – Climate Protection Partnerships Division, August, 2004, p.4.

5. http://www.cogeneration.net/Combined_Cycle_Power_Plants.htm

6. "Output-Based Emissions Standards; Advancing Innovative Energy Technologies", Northeast-Midwest Institute; 2003, p. 9.

9. PARTIAL PERCENTAGE CALCULATION

N/A.

10. PROPERTY CATEGORIES AND COSTS

See attached Schedule 10.

11. EMISSION REDUCTION INCENTIVE GRANT

Will an application for an Emission Reduction Incentive Grant be on file for this property/project:

[ ] Yes [X] No

12. APPLICATION DEFICIENCIES

After an initial review of the application, the TCEQ may determine that the information provided with the application is not sufficient to make a use determination. The TCEQ may send a notice of deficiency, requesting additional information that must be provided within 30 days of written notice.

13. FORMAL REQUEST FOR SIGNATURE

By signing this application, you certify that this information is true to the best of your knowledge and belief.

NAME: _____ DATE: 22 Apr 2008

TITLE: Director

COMPANY: Duff and Phelps LLC

Under Texas Penal Code, Section 37.10, if you make a false statement on this application, you could receive a jail term of up to one year and a fine up to $2,000, or a prison term of two to 10 years and a fine of up to $5,000.

14. DELINQUENT FEE/PENALTY PROTOCOL

This form will not be processed until all delinquent fees and/or penalties owed to the TCEQ or the Office of the Attorney General on behalf of the TCEQ are paid in accordance with the Delinquent Fee and Penalty Protocol. (Effective 9/1/2006)

Navasota - Colorado Bend - Phase I
3821 S. State Hwy 60
TCEQ Use Determination Application - 2008
Scheule 10
Tier IV

10. PROPERTY CATEGORIES AND COST

PROPERTY	PROJECT ID. NO.	IN SERVICE DATE	TAXABLE ON OR BEFORE 1/1/94? (Y / N)	TIER IV DECISION FLOW CHART BOX	ECL NUMBER	ESTIMATED PURCHASE COST	% EXEMPT	EXEMPT COST
Heat Recovery Steam Generators (HRSG)	1	2007	N	3	B-8	$ 26,544,805	100%	$ 26,544,805
Steam Turbine System	2	2007	N	3	B-10	$ 10,091,206	100%	$ 10,091,206
					Tier IV Total	$ 36,636,012		$ 36,636,012

Navasota - Colorado Bend - Phase II
3821 S. State Hwy 60
TCEQ Use Determination Application - 2008
Scheule 10
Tier IV

10. PROPERTY CATEGORIES AND COST

PROPERTY	PROJECT ID. NO.	IN SERVICE DATE	TAXABLE ON OR BEFORE 1/1/94? (Y / N)	TIER IV DECISION FLOW CHART BOX	ECL NUMBER	ESTIMATED PURCHASE COST	% EXEMPT	EXEMPT COST
Heat Recovery Steam Generators (HRSG)	3	CWIP	N	3	B-8	$ 30,018,278	100%	$ 30,018,278
Steam Turbine System	4	CWIP	N	3	B-10	$ 22,386,336	100%	$ 22,386,336
					Tier IV Total	$ 52,404,614		$ 52,404,614

52 404 614
36 636 012
89 040 636

Navasota Wharton Energy Partners LP
Colorado Bend Energy Center - Phase I
Schedule A - 2008 Thermal Efficiency Calculation

Subject Details:	
Average Heat Rate [1]	7,746 (Btu/kWh)
NOx Emissions [2]	168.6 Tons / year
Plant Capacity [3]	275 MW
Capacity Factor [4]	100.00%
Technology [5]	Combined Cycle
Total Subject Facility Cost [6]	$169,296,979
Total Cost of Tier IV Equipment [7]	$36,636,012
Baseline Details:	
Average Heat Rate [8]	10,490 Btu/kWh
Technology [9]	Steam Turbine

STEP 1
Subject Output-Based Limit Calculation (lbs NOx / MWh)

Input-based Limit (lbs NOx/MMBtu)	x	Heat Rate (Btu/kWh)	/	Unit Conversions (1,000,000 Btu / 1000 kWh)	=	Output-based Limit (lbs NOx/MWh)
0.0198		7,746		1,000		0.1533

STEP 2
Subject Output Conversion Calculation (NOx Tons / Year)

Output-based Limit (lbs NOx/MWh)	x	Capacity (MW)	x	Capacity Factor	x	Unit Conversions (365 days * 24 Hours / 2,000 lbs)	=	Output NOx (Tons/Year)
0.1533		275		100.00%		4		168.6

STEP 3
Baseline Output-Based Limit Calculation (lbs NOx / MWh)

Input-based Limit (lbs NOx/MMBtu)	x	Heat Rate (Btu/kWh)	/	Unit Conversions (1,000,000 Btu / 1000 kWh)	=	Output-based Limit (lbs NOx/MWh)
0.0198		10,490		1,000		0.2077

STEP 4
Baseline Output Conversion Calculation (NOx Tons / Year)

Output-based Limit (lbs NOx/MWh)	x	Capacity (MW)	x	Capacity Factor	x	Unit Conversions (365 days * 24 Hours / 2,000 lbs)	=	Output NOx (Tons/Year)
0.2077		275		100.00%		4		228.5

STEP 5
Percent NOx Reduction Calculation

(Output Baseline	-	Output Subject)	/	Output Subject	=	% NOx Reduction
228.5		168.6		168.6		35.5%

STEP 6
Percent Exempt Calculation

Total Subject Unit Cost	X	% NOx Reduction	=	Capital Cost of NOx Avoidance
$169,296,979		35.5%		$60,100,428

STEP 7
Percent Exempt Calculation

Total Cost of NOx Avoidance	/	Total Cost of HB 3732 Equipment	=	% Exempt
$60,100,428		$36,636,012		164.0%

Conclude	100%

(1) - Heat rate represents plant performance test heat rate (HHV) and was provided by the client
(2) - NOx emissions is the NOx pollutant emission permit limit in tons per year provided by the client
(3) - Plant capacity is the average nominal capacity and was provided by the client
(4) - Capacity factor is the maximum operating level allowed under the emissions permit provided by the client
(5) - Technology represents the actual technology of the subject
(6) - Total subject facility cost represents the total cost to build the entire facility and it was determined based on data provided by the client
(7) - Total Tier IV equipment was determined by allocating the eligible TCEQ ECL part B equipment and their associated cost from actual data provide by the client
(8) - Baseline heat rate was published by the Energy Information Administration ("EIA")
(9) - Baseline technology represents the technology that the subject would have replaced at the time of the subjects construction

Navasota Wharton Energy Partners LP
Colorado Bend Energy Center - Phase II
Schedule A - 2008 Thermal Efficiency Calculation

Subject Details:

Average Heat Rate [1]	7,746 (Btu/kWh)
NOx Emissions [2]	168.6 Tons / year
Plant Capacity [3]	275 MW
Capacity Factor [4]	100.00%
Technology [5]	Combined Cycle
Total Subject Facility Cost [6]	$162,042,822
Total Cost of Tier IV Equipment [7]	$52,404,614

Baseline Details:

Average Heat Rate [8]	10,490 Btu/kWh
Technology [9]	Steam Turbine

STEP 1
Subject Output-Based Limit Calculation (lbs NOx / MWh)

Input-based Limit (lbs NOx/MMBtu)	x	Heat Rate (Btu/kWh)	/	Unit Conversions (1,000,000 Btu / 1000 kWh)	=	Output-based Limit (lbs NOx/MWh)
0.0198		7,746		1,000		0.1533

STEP 2
Subject Output Conversion Calculation (NOx Tons / Year)

Output-based Limit (lbs NOx/MWh)	x	Capacity (MW)	x	Capacity Factor	x	Unit Conversions (365 days * 24 Hours / 2,000 lbs)	=	Output NOx (Tons/Year)
0.1533		275		100.00%		4		168.6

STEP 3
Baseline Output-Based Limit Calculation (lbs NOx / MWh)

Input-based Limit (lbs NOx/MMBtu)	x	Heat Rate (Btu/kWh)	/	Unit Conversions (1,000,000 Btu / 1000 kWh)	=	Output-based Limit (lbs NOx/MWh)
0.0198		10,490		1,000		0.2077

STEP 4
Baseline Output Conversion Calculation (NOx Tons / Year)

Output-based Limit (lbs NOx/MWh)	x	Capacity (MW)	x	Capacity Factor	x	Unit Conversions (365 days * 24 Hours / 2,000 lbs)	=	Output NOx (Tons/Year)
0.2077		275		100.00%		4		228.5

STEP 5
Percent NOx Reduction Calculation

(Output Baseline	-	Output Subject)	/	Output Subject	=	% NOx Reduction
228.5		168.6		168.6		35.5%

STEP 6
Percent Exempt Calculation

Total Subject Unit Cost	X	% NOx Reduction	=	Capital Cost of NOx Avoidance
$162,042,822		35.5%		$57,525,202

STEP 7
Percent Exempt Calculation

Total Cost of NOx Avoidance	/	Total Cost of HB 3732 Equipment	=	% Exempt
$57,525,202		$52,404,614		109.8%

Conclude	100%

(1) - Heat rate represents the anticipated heat rate (HHV) and was provided by the client
(2) - NOx emissions is the NOx pollutant emission permit limit in tons per year provided by the client
(3) - Plant capacity is the average nominal capacity and was provided by the client
(4) - Capacity factor is the maximum operating level allowed under the emissions permit provided by the client
(5) - Technology represents the actual technology of the subject
(6) - Total subject facility cost represents the total cost to build the entire facility and it was determined based on data provide by the client
(7) - Total Tier IV equipment was determined by allocating the eligible TCEQ ECL part B equipment and their associated cost from actual data provide by the client
(8) - Baseline heat rate was published by the Energy Information Administration ("EIA")
(9) - Baseline technology represents the technology that the subject would have replaced at the time of the subjects construction

Attachment B

Buddy Garcia, *Chairman*
Larry R. Soward, *Commissioner*
Bryan W. Shaw, Ph.D., *Commissioner*
Glenn Shankle, *Executive Director*

TEXAS COMMISSION ON ENVIRONMENTAL QUALITY

Protecting Texas by Reducing and Preventing Pollution

USE DETERMINATION

The Texas Commission on Environmental Quality has reviewed Use Determination Application, 07-11926, filed by:

NAVASOTA WHARTON ENERGY PARTNERS LP
COLORADO BEND
3821 S STATE HWY 60
WHARTON TX 77488

The pollution control property/project listed in the Use Determination Application is:

This facility has four thermally efficient heat recovery steam generators (HRSGs) and two steam turbines. This application is a Tier IV application seeking a partial use determination for the HRSGs and the enhanced steam turbines.

The outcome of the review is:

A 100% positive use determination for the four Heat Recovery Steam Generators. This equipment is considered to be pollution control equipment and was installed to meet or exceed federal or state regulations.

A negative determination is issued for the two steam turbines. The use of the steam turbines does not provide an environmental benefit at the site. The steam turbines are not considered to be pollution control equipment.

Executive Director

May 1, 2008
Date

TAX RELIEF FOR POLLUTION CONTROL PROPERTY: TECHNICAL REVIEW DOCUMENT

Reviewed By: RLH App. No.: 07 - 11926 Review Start Date: 4/8/2008

Company Name: NAVASOTA WHARTON ENERGY PARTNERS LP
Facility Name: COLORADO BEND
County: WHARTON Outstanding Fees: N
Batch/Voucher Number:B500028

ADMINISTRATIVE REVIEW

Administrative Complete Date:4/8/2008

TIER LEVEL
What Tier is this application? The application was filed as a Tier IV application. Is this the appropriate level?

The property listed on this application, Heat Recovery Steam Generators and a steam turbine are items B8 and B10 on the Equipment and Categories List. This application was filed as a Tier IV. Tier IV is the appropriate level for this application.

RELEVANT RULE, REGULATION, OR STATUTORY PROVISION
The rule listed in the application is: 40 CFR 60.44Da
The appropriate rule is: 40 CFR 60.44Da

Explain why this is the appropriate rule?

40 CFR 60.Subpart DA: Standards of Performance for New Stationary Sources. Standards of performance for Electric Utility Steam Generating Units for Which Construction is Commenced after September 18, 1978. This is an appropriate rule.

BRIEF DESCRIPTION OF PROPERTY
The property is described as:

This facility has four thermally efficient heat recovery steam generators (HRSGs) and two steam turbines. This application is a Tier IV application seeking a partial use determination for the HRSGs and the enhanced steam turbines.

Is an adequate description and purpose of the property provided? Does it list the anticipated environmental benefits? Are sketches and flow diagrams provided if needed?

An adequate description of the property was provided, and the purpose of the property was listed. The anticipated environmental benefit is listed. Sketches and flow diagrams were provided.

DECISION FLOWCHART(30 TAC 17.15(a))
Mark the appropriate boxes: Box 3 Box 5 Box 6(IV) Y Box 10(III) Box 12(I) Box 13(II)
PART B DECISION FLOWCHART (17.15(b))
Mark the appropriate boxes: Box 1Y Box 2 Y Box 3 Y

Describe how the property flowed through the Decision Flowchart:

The Heat Recovery Steam Generators (HRSGs) are listed on Part B of the Equipment & Categories List as item B-8. As Part B equipment the HRSGs leave the Decision Flow Chart at Box 6 and pass through Box 1 of the Part B Decision Flow Chart with a yes answer. Since the use

of HRSGs provide an environmental benefit of reduced NOx emissions at the site there is a yes answer for Box 2. Since there is a reduction in NOx emissions there is an environmental rule which is being met, so there is a yes answer to Box 3. The steam turbine passes through Box 1 on the Part B Decision Flow Chart with a yes answer. Since the use of the steam turbine does not provide an environmental benefit at the site a no answer is the result of Box 2. The steam turbine is not eligible for a positive determination.

TIER III or IV APPLICATIONS

Does your calculation agree with the applicants?

No. The application contains a proposed formula for calculating the pollution control value of the HRSGs and the steam turbine. The formula is outcome determinative, and its focus is not on the pollution control aspect of the property. The Executive Director disagrees with this formula.

PROPERTY CATEGORIES AND COSTS

Is the table completed correctly? Has the applicant certified that all listed property became taxable for the first time after January 1, 1994? Is all information necessary for conducting the technical review included.

The table was completed correctly. The applicant certified that all listed property became taxable for the first time after January 1, 1994. All the information necessary for conducting the technical review was included on the application.

TECHNICAL DEFICIENCIES

Is the application complete as received: Y If the application was not administratively complete explain below when justifying the final decision in the final determination section. If the application was not technically complete then:

Provide the language to be used in the Notice of Deficiency (NOD) letter:

Summarize the NOD response:

Provide the language used in the second NOD letter:

Summarize the second NOD response:

Provide the language used in the thied NOD letter:

Summarize the third NOD response:

FINAL DETERMINATION

If the property description has been summarized enter the detailed property description:

This facility has four thermally efficient heat recovery steam generators (HRSGs) and two steam

turbines. This application is a Tier IV application seeking a partial use determination for the HRSGs and the enhanced steam turbines.

Provide the reason for your final determination:

The Heat Recovery Steam Generators meet all of the requirements of Chapter 17. A positive use determination based on the most appropriate formula should be issued for the Heat Recovery Steam Generators. The most appropriate formula has been determined by the Executive Director. A negative determination should be issued for the steam turbine. The use of the steam turbine does not result in there being an environmental benefit at the site.

Provide the language for the final determination.

A positive use determination of 100% for the four Heat Recovery Steam Generators. A negative determination is issued for the steam turbine. The use of the steam turbine does not provide an environmental benefit at the site. The steam turbine is not considered to be pollution control equipment.

Highlight the required signatures and establish the appropriate due dates.

Reviewed: [signature] **Date Signed:** 5/1/08

Peer Reviewed: [signature] **Date Signed:** 5-1-08

Team Leader: [signature] **Date Signed:** 5/1/08

Section Manager: [signature] **Date Signed:** MAY 1 2008

Division Director: [signature] **Date Signed:** MAY 1 2008

Attachment C

WHARTON COUNTY
APPRAISAL DISTRICT
2407 1/2 N. Richmond Road
Wharton, Texas 77488

Phone: 979-532-8931
Fax: 979-532-5691

TEXAS COMMISSION ON ENVIRONMENTAL QUALITY
2008 MAY 21 AM 10 00
CHIEF CLERKS OFFICE

May 19, 2008

Office of the Chief Clerk - MC 105
Texas Commission on Environmental Quality
PO Box 13087
Austin, TX. 78711-3087

Re: TCEQ Use Determination No. **07-11926**

Dear Ms. Castañuela,

I am writing this letter as an official appeal of the TCEQ's property tax Pollution Control Exemption Use Determination with the tracking number **07-11926** filed by **Navasota Wharton energy Partners I** for the **Colorado Bend Power Generation** facility. We believe that the Heat Recovery Steam Generators described in this application are production equipment in that they burn natural gas to create steam to generate electricity. This creates pollutants, not reduces them.

Secondly, the pollution control components associated with the HRSG's that do reduce pollution have already been exempted under Use Determination 07-11925. Therefore, this second exemption of the entire HRSG only serves to exempt the non-pollution control components of the units.

I respectfully request that our appeal regarding this Use Determination be granted and the exemption be denied.

Hugh L. Landrum & Associates, Inc. will be acting as our agent in this matter.

Thank you for your time and consideration.

Sincerely,

Tylene Gamble
Chief Appraiser
Wharton County Appraisal District

Attachment D

Buddy Garcia, *Chairman*
Larry R. Soward, *Commissioner*
Bryan W. Shaw, Ph.D., *Commissioner*
Mark R. Vickery, P.G., *Executive Director*

TEXAS COMMISSION ON ENVIRONMENTAL QUALITY

Protecting Texas by Reducing and Preventing Pollution

TEXAS COMMISSION ON ENVIRONMENTAL QUALITY
2009 FEB 23 PM 3:34
CHIEF CLERKS OFFICE

February 23, 2009

LaDonna Castañuela, Chief Clerk
TCEQ Office of Chief Clerk MC-105
P.O. Box 13087
Austin, Texas 78711-3087.

Re: TCEQ Docket Nos. 2008-0830-MIS-U (UD No. 07-11914/Tenaska Gateway Partners, Ltd.— Rusk County Appraisal District), 2008-0831-MIS-U (UD No. 07-11966/Freestone Power Generation, L.P.— Freestone Central Appraisal District), 2008-0832-MIS-U (UD No. 07-11971/Borger Energy Associates, L.P.— Hutchinson County Appraisal District), 2008-0849-MIS-U (UD No. 07-11969/ Brazos Valley Energy, L.P.— Fort Bend Central Appraisal District), 2008-0850-MIS-U (UD No. 07-11994/Freeport Energy Center, L.P.— Brazoria County Appraisal District), 2008-0851-MIS-U (UD No. 07-11926/Navasota Wharton Energy Partners, L.P.— Wharton County Appraisal District).
Executive Director's Motion for Continuance

Dear Ms. Castañuela:

Enclosed for filing, please find a copy of the *"Executive Director's Motion for Continuance"* regarding the above referenced use determination appeals. If you have any questions, please do not hesitate to contact me at (512) 239-0969.

Sincerely,

Timothy J. Reidy
Staff Attorney
Environmental Law Division

TCEQ Docket Numbers
2008-0830-MIS-U (UD 07-11914/Tenaska Gateway Partners, Ltd. – Rusk County)
2008-0831-MIS-U (UD 07-11966/Freestone Power Generation, L.P. – Freestone County)
2008-0832-MIS-U (UD 07-11971/Borger Energy Associates, L.P. – Hutchinson County)
2008-0849-MIS-U (UD 07-11969/Brazos Valley Energy, L.P. – Fort Bend County)
2008-0850-MIS-U (UD 07-11994/Freeport Energy Center, L.P. – Brazoria County)
2008-0851-MIS-U (UD 07-11926/Navasota Wharton Energy Partners, L.P. – Wharton County)

APPEAL OF THE EXECUTIVE DIRECTOR'S USE DETERMINATIONS ISSUED TO TENASKA GATEWAY PARTNERS, LTD.; FREESTONE POWER GENERATION, L.P.; BORGER ENERGY ASSOCIATES, L.P.; BRAZOS VALLEY ENERGY, L.P.; FREEPORT ENERGY CENTER, L.P.; and NAVASOTA WHARTON ENERGY PARTNERS, L.P.	§	BEFORE THE TEXAS COMMISSION ON ENVIRONMENTAL QUALITY

CHIEF CLERKS OFFICE
2009 FEB 23 PM 3:35
TEXAS COMMISSION ON ENVIRONMENTAL QUALITY

EXECUTIVE DIRECTOR'S MOTION FOR CONTINUANCE

TO THE GENERAL COUNSEL OF THE TEXAS COMMISSION ON ENVIRONMENTAL QUALITY:

The Commission is scheduled to consider the above referenced use determination appeals at its February 25, 2009 agenda meeting. The Executive Director respectfully requests that, pursuant to Section 10.4(b) of Title 30 of the Texas Administrative Code, the Commission continue its consideration of these matters to allow the Executive Director more time to evaluate its current recommendation. The Executive Director has conferred with all parties, and none of the parties oppose this motion.

Respectfully submitted,
Texas Commission on Environmental Quality

Mark R. Vickery, P.G.
Executive Director

Robert Martinez, Director
Environmental Law Division

By Tim Reidy
Timothy J. Reidy, Staff Attorney
Environmental Law Division

State Bar No. 24058069
P.O. Box 13087, MC 173
Austin, Texas 78711-3087
(512) 239-0969
REPRESENTING THE EXECUTIVE DIRECTOR OF THE TEXAS COMMISSION ON ENVIRONMENTAL QUALITY

CERTIFICATE OF SERVICE

I certify that on February 23, 2009, a copy of the "Executive Director's Motion for Continuance" was filed with the Texas Commission on Environmental Quality's Office of the Chief Clerk, and was sent by hand delivery, first-class mail, or facsimile to all persons on the attached mailing list.

Timothy J. Reidy, Staff Attorney
Environmental Law Division
State Bar No. 24058069

TEXAS COMMISSION ON ENVIRONMENTAL QUALITY
2009 FEB 23 PM 3:35
CHIEF CLERKS OFFICE

Les Trobman
General Counsel
Texas Commission on Environmental Quality
Office of General Counsel
P.O. Box 13087, MC-101
Austin, Texas 78711-3087
512/239-5500 Fax 512/239-5533

Terry W. Decker, RPA/CCA/RTA
Chief Appraiser
Rusk County Appraisal District
P. O. Box 7
Henderson, Texas 75653-0007
903/657-3578 Fax 903/657-9073

David Johnson
Tenaska, Inc.
1044 N. 115th St., Suite 400
Omaha, Nebraska 68154-4446

Bud Black, RPA/CTA
Chief Appraiser
Freestone Central Appraisal District
218 North Mount
Fairfield, Texas 75840
903/389-5510 Fax 903/389-5955

Freestone Power Generation L.P.
717 Texas, Suite 1000
Houston, Texas 77002

Greg Maxim
Duff & Phelps LLC
919 Congress Ave., Suite 1450
Austin, Texas 78701
512/671-5580 Fax 512/671-5501

Pritchard & Abbott, Inc.
Attn: Mr. C. Wayne Frazell
4900 Overton Commons Court
Fort Worth, Texas 76132-3687
817/926-7861 Fax 817/927-5314

Diana Hooks, RPA/RTA
Chief Appraiser
Hutchinson County Appraisal District
P. O. Box 5065
Borger, Texas 79008-5065
806/274-2294 Fax 806/273-3400

Borger Energy Associates, LP
7001 Boulevard 26, Suite 310
North Richland Hills, Texas 76180

Dennis Deegear
Duff & Phelps LLC
919 Congress Ave., Suite 1450
Austin, Texas 78701
512/671-5523 Fax 512/671-5501

Glen Whitehead, RPA
Chief Appraiser
Fort Bend County Central Appraisal District
2801 B. F. Terry Blvd.
Rosenberg, Texas 77471-5600
281/344-8623 Fax 281/344-8632

Brazos Valley Energy, L.P.
717 Texas, Suite 1000
Houston, Texas 77002

Hugh L. Landrum & Associates
Attn: Mr. Hugh L. Landrum, Jr.
12621 Featherwood, Suite 325
Houston, Texas 77034
281/484-7000 Fax 281/484-7272

Cheryl Evans
Chief Appraiser
Brazoria County Appraisal District
500 North Chenango
Angleton, Texas 77515
979/849-7792 Fax 979/849-7984

Freeport Energy Center, LP
4100 Underwood Road
Pasadena, Texas 77507

Justin Hyland
Leo Scherrer
Calpine/Dow
717 Texas Ave.
Houston, Texas 77002
713/830-8873 Fax 713/830-8670

Tylene Gamble
Chief Appraiser
Wharton County Appraisal District
2407½ N. Richmond Road
Wharton, Texas 77488
979/532-8931 Fax 979/532-5691

Navasota Wharton Energy Partners, LP
403 Corporate Woods
Magnolia, Texas 77354

D. A. Chris Ekoh
TCEQ Environmental Law Division (MC 173)
P. O. Box 13087
Austin, Texas 78711-3087
512/239-5487 Fax 512/239-0606

Tim Reidy
TCEQ Environmental Law Division (MC 173)
P. O. Box 13087
Austin, Texas 78711-3087
512/239-5487 Fax 512/239-0606

Ron Hatlett
TCEQ Chief Engineers Office (MC 110)
P. O. Box 13087
Austin, Texas 78711-3087
512/239-3100 Fax 512/239-3165

Blas Coy
TCEQ Office of Public Interest Counsel (MC 103)
P. O. Box 13087
Austin, Texas 78711-3087
512/239-6363 Fax 512/239-6377

Docket Clerk
TCEQ Office of the Chief Clerk (MC 105)
P. O. Box 13087
Austin, Texas 78711-3087
512/239-3300 Fax 512/239-3311

Bridget Bohac
512/239-1795 Fax 512/239-1794
TCEQ Office of Public Assistance (MC 108)
P. O. Box 13087
Austin, Texas 78711-3087
512/239-4000 Fax 512/239-4007
Minor Hibbs

TCEQ Chief Engineers Office (MC 168)
P.O. Box 13087
Austin, Texas 78711-3087
512/239-6590 Fax 512-239-1794

Attachment E

Buddy Garcia, *Chairman*
Larry R. Soward, *Commissioner*
Bryan W. Shaw, Ph.D., *Commissioner*
Mark R. Vickery, P.G., *Executive Director*

TEXAS
COMMISSION
ON ENVIRONMENTAL
QUALITY

2009 FEB 23 PM 4:41

CHIEF CLERKS OFFICE

TEXAS COMMISSION ON ENVIRONMENTAL QUALITY

Protecting Texas by Reducing and Preventing Pollution

February 23, 2009

To: Persons on the attached Mailing List (By mail, and facsimile as indicated)

Re: Appeals of the Executive Director's Use Determinations regarding Tenaska Gateway Partners, Ltd. (Rusk County), Freestone Power Generation LP (Freestone County), Borger Energy Associates, LP (Hutchinson County), Brazos Valley Energy L.P. (Fort Bend County), Freeport Energy Center, L.P. (Brazoria County), and Navasota Wharton Energy Partners LP (Wharton County), TCEQ Use Determination Nos. 07-11914, 07-11966, 07-11971, 07-11969, 07-11994 and 07-11926; TCEQ Docket Nos. 2008-0830-MIS-U, 2008-0831-MIS-U, 2008-0832-MIS-U, 2008-0849-MIS-U, 2008-0850-MIS-U, and 2008-0851-MIS-U

The above-named matters are currently scheduled to be considered by the Texas Commission on Environmental Quality ("TCEQ") at its February 25, 2009, public meeting. The TCEQ Executive Director (ED) filed a *Motion for Continuance* (ED's Motion) on February 23, 2009. The ED's Motion asks that the Commission continue its consideration of these above-named matters to allow the ED more time to evaluate its current recommendation. The ED states that none of the parties oppose the ED's Motion.

Pursuant to the ED's Motion, the Office of General Counsel has determined to continue the matter from the February 25, 2009 meeting. Accordingly, this matter is continued indefinitely pursuant to 30 TAC § 10.4. The Office of General Counsel will notify the parties by subsequent letter of the future agenda setting and any associated filing deadlines.

If you have any questions regarding this matter, please contact John Sedberry, Assistant General Counsel, at 512-239-6575.

Respectfully,

Les Trobman
General Counsel

Mailing List

Mailing List

Tenaska Gateway Partners, Ltd. (Rusk County), Freestone Power Generation LP (Freestone County), Borger Energy Associates, LP (Hutchinson County), Brazos Valley Energy L.P. (Fort Bend County), Freeport Energy Center, L.P. (Brazoria County), and Navasota Wharton Energy Partners LP (Wharton County)
TCEQ Docket Nos. 2008-0830-MIS-U, 2008-0831-MIS-U, 2008-0832-MIS-U, 2008-0849-MIS-U, 2008-0850-MIS-U, and 2008-0851-MIS-U

Diana Hooks, RPA/RTA
Chief Appraiser
Hutchinson County Appraisal District
P.O. Box 5065
Borger, Texas 79008-5065
806/274-2294 FAX806/273-3400

Borger Energy Associates, LP
7001 Boulevard 26, Suite 310
North Richland Hills, Texas 76180

Dennis Deegear
Duff and Phelps LLC
919 Congress Ave., Suite 1450
Austin, Texas 78701
512/671-5523 FAX 512/671-5501

Pritchard & Abbott, Inc.
Attn: Mr. C. Wayne Frazell
4900 Overton Commons Court
Fort Worth, Texas 76132-3687
817/926-7861 FAX 817/927-5314

Glen Whitehead, RPA
Chief Appraiser
Fort Bend County Appraisal District
2801 B. F. Terry Blvd.
Rosenberg, Texas 77471-5600
281/344-8623 FAX 281/344-8632

Brazos Valley Energy L.P.
717 Texas, Suite 1000
Houston, Texas 77002

Greg Maxim
Duff and Phelps LLC
919 Congress Ave., Suite 1450
Austin, Texas 78701
512/671-5580 FAX 512/671-5501

Hugh L. Landrum & Associates, Inc.
Attn: Mr. Hugh L. Landrum Jr.
12621 Featherwood Drive, Suite 325
Houston, Texas 77034
281/484-7000 FAX 281/484-7272

Cheryl Evans
Chief Appraiser
Brazoria County Appraisal District
500 North Chenango
Angleton, Texas 77515
979/849-7792 FAX 979/849-7984

Freeport Energy Center, LP
4100 Underwood Road
Pasedena, Texas 77507

Justin Hyland
Leo Scherrer
Calpine Corporation/Dow
717 Texas Ave. Suite 1000
Houston, Texas 77002
713/830-8873 FAX 832/325-0934

Bud Black, RPA/CTA
Chief Appraiser
Freestone Central Appraisal District
218 North Mount
Fairfield, Texas 75840
903/389-5510 FAX 903/389-5955

Freestone Power Generation L.P.
717 Texas, Suite 1000
Houston, Texas 77002

Tylene Gamble
Chief Appraiser
Wharton County Appraisal District
2407 ½ N. Richmond Road
Wharton, Texas 77488
979/532-8931 FAX 979/532-5691

Navasota Wharton Energy Partners LP
403 Corporate Woods
Magnolia, Texas 77354

Terry W. Decker, RPA/CCA/RTA
Chief Appraiser
Rusk County Appraisal District
P.O. Box 7
Henderson, Texas 75653-0007
903/657-3578 FAX 903/657-9073

David D. Johnson
Tenaska, Inc.
1044 N. 115th St., Suite 400
Omaha, Nebraska 68154-4446
402/691-9500 FAX 402/691-9526

Tenaska Gateway Partners, Ltd.
Attn: Mr. Jerry K. Crouse, CFO
1044 N. 115th St., Suite 400
Omaha, Nebraska 68154-4446
402/691-9500 FAX 402/691-9526

Stephanie Bergeron Perdue
TCEQ Environmental Law Division MC 173
P.O. Box 13087
Austin, Texas 78711-3087
512/239-0600 FAX 512/239-0606

Chris Ekoh
TCEQ Environmental Law Division MC 173
P.O. Box 13087
Austin, Texas 78711-3087
512/239-0600 FAX 512/239-0606

Ron Hatlett
TCEQ Small Business & Environmental
Assistance Division MC 110
P.O. Box 13087
Austin, Texas 78711-3087
512/239-3100 FAX 512/239-5675

Blas Coy
TCEQ Office of Public Interest Counsel
MC 103
P.O. Box 13087
Austin, Texas 78711-3087
512/239-6363 FAX 512/239-6377

Docket Clerk
TCEQ Office of Chief Clerk MC 105
P.O. Box 13087
Austin, Texas 78711-3087
512/239-3300 FAX 512/239-3311

Bridget Bohac
TCEQ Office of Public Assistance MC 108
P.O. Box 13087
Austin, Texas 78711-3087
512/239-4000 FAX 512/239-4007

David S. Schanbacher
TCEQ Chief Engineer's Office (MC 168)
P.O. Box 13087
Austin, Texas 78711-3087
512/239-6590 FAX 512/239-1794

Attachment F

TCEQ Docket Numbers
2008-0830-MIS-U (UD 07-11914/Tenaska Gateway Partners, Ltd – Rusk County)
2008-0831-MIS-U (UD 07-11966/Freestone Power Generation, L.P. – Freestone County)
2008-0832-MIS-U (UD 07-11971/Borger Energy Associates, L.P. – Hutchinson County)
2008-0849-MIS-U (UD 07-11969/Brazos Valley Energy, L.P. – Fort Bend County)
2008-0850-MIS-U (UD 07-11994/Freeport Energy Center, L.P. – Brazoria County)
2008-0851-MIS-U (UD 07-11926/Navasota Wharton Energy Partners, L.P. – Wharton County)

Appeal of Executive Director's Use	§	Before the
Determination Issue to	§	
Tenaska Gateway Partners, Ltd;	§	Texas Commission
Freestone Power Generation, L.P.;	§	
Borger Energy Associates, L.P.;	§	on
Brazos Valley Energy, L.P.;	§	
Freeport Energy Center, L.P.; and	§	
Navasota Wharton Energy Partners, L.P	§	Environmental Quality

Executive Director's Request for Remand of Applications Submitted by Tenaska Gateway Partners, Ltd; Freestone Power Generation, L.P.; Borger Energy Associates, L.P.; Brazos Valley Energy, L.P.; Freeport Energy Center, L.P.; and Navasota Wharton Energy Partners, L.P.

Pursuant to 30 TAC § 17.25(d), the Executive Director of the Texas Commission on Environmental Quality requests that the General Council remand the above listed applications for further processing.

Respectfully submitted,

Texas Commission on Environmental Quality

Zak Covar
Executive Director

Caroline Sweeney, Deputy Director
Office of Legal Services

Robert Martinez, Director
Environmental Law Division

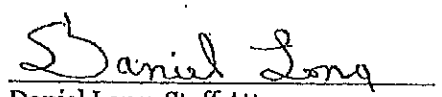

Daniel Long, Staff Attorney
Environmental Law Division
State Bar No. 24032679
P.O. Box 13087, MC 173
Austin, Texas 78711-3087
(512) 239-5373
(512) 239-0606

CERTIFICATE OF SERVICE

I certify that on June 18, 2012, the original and 7 copies of the Executive Director's Request for Remand of Applications Submitted by Tenaska Gateway Partners, Ltd; Freestone Power Generation, L.P.; Borger Energy Associates, L.P.; Brazos Valley Energy, L.P.; Freeport Energy Center, L.P.; and Navasota Wharton Energy Partners, L.P. was filed with the Office of the Chief Clerk, Texas Commission on Environmental Quality, and was served by first-class mail, agency mail, electronic mail, or facsimile to all persons on the attached mailing list.

Daniel Long

Daniel Long, Staff Attorney
Environmental Law Division
Texas Commission on Environmental Quality

Mailing List
TCEQ Docket Numbers
2008-0830-MIS-U (UD 07-11914/Tenaska Gateway Partners, Ltd – Rusk County)
2008-0831-MIS-U (UD 07-11966/Freestone Power Generation, L.P. – Freestone County)
2008-0832-MIS-U (UD 07-11971/Borger Energy Associates, L.P. – Hutchinson County)
2008-0849-MIS-U (UD 07-11969/Brazos Valley Energy, L.P. – Fort Bend County)
2008-0850-MIS-U (UD 07-11994/Freeport Energy Center, L.P. – Brazoria County)
2008-0851-MIS-U (UD 07-11926/Navasota Wharton Energy Partners, L.P. – Wharton County)

Appraisal Districts

Terry W. Decker, RRP/CTA/RTA
Chief Appraiser
Rusk County Appraisal District
P. O. Box 7
Henderson, Texas 75653-0007
903/657-3578 Fax 903/657-9073
tdecker@ ruskcad.org

Bud Black, RPA/CTA
Chief Appraiser
Freestone Central Appraisal District
218 North Mount Street
Fairfield, Texas 75840
903/389-5510 Fax 903/389-5955
general.info@freestoncad.org

Diana Hooks, RPA/RTA
Chief Appraiser
Hutchinson County Appraisal District
P. O. Box 5065
Borger, Texas 79008-5065
806/274-2294 Fax 806/273-3400
hcad3@amaonline.com

Glen Whitehead, RPA
Chief Appraiser
Fort Bend County Central Appraisal District
2801 B. F. Terry Blvd.
Rosenberg, Texas 77471-5600
281/344-8623 Fax 281/762-9666
Glenwhitehead@fbcad.org

Cheryl Evans
Chief Appraiser
Brazoria County Appraisal District
500 North Chenango Street
Angleton, Texas 77515
979/849-7792 Fax 979/849-7984
bcad@brazoriacad.org

Tylene Gamble
Chief Appraiser
Wharton County Appraisal District
308 East Milam Street
Wharton, Texas 77488-4918
979/532-8931 Fax 979/532-5691
whartoncad@sbcglobal.net

Pritchard & Abbott, Inc.
Attn: Mr. C. Wayne Frazell
4900 Overton Commons Court
Fort Worth, Texas 76132-3687
817/926-7861 Fax 817/927-5314
wfrazell@pandai.com

Applicants:

David D. Johnson
Tenaska Gateway Partners, Ltd.
1044 N 115th St. Suite 400
Omaha, Nebraska 68154-4446
402/691-9500 Fax 402/691-9226

Freestone Power Generation, L.P.
717 Texas, Suite 1000
Houston, Texas 77002

Borger Energy Associates, L.P.
7001 Boulevard 26, Suite 310
North Richland Hills, Texas 76180

Brazos Valley Energy, L.P.
717 Texas, Suite 1000
Houston, Texas 77002

Freeport Energy Center, L.P.
4100 Underwood Road
Pasadena, Texas 77507

Navasota Wharton Energy Partners LP
403 Corporate Woods
Magnolia, Texas 77354

Greg Maxim
Dennis Deegear
Duff & Phelps LLC
919 Congress Ave., Suite 1450
Austin, Texas 78701
512/671-5580 Fax 512/671-5501
gregory.maxim@duffandphelps.com
dennis.deegar@duffandphelps.com

Justin Hyland
Leo Scherrer
717 Texas Avenue
Houston, Texas 77002
713/830-8873 Fax 713/830-8670
hylandj@calpine.com
lscherrer@dow.com

Hugh L. Landrum & Associates
Attn: Mr. Hugh L. Landrum, Jr.
12621 Featherwood, Suite 325
Houston, Texas 77034
281/484-7000 Fax 281/484-7272
hughjr@hughlandrum.com

Commission:

Blas Coy
TCEQ Office of Public Interest Counsel (MC 103)
P. O. Box 13087
Austin, Texas 78711-3087
512/239-6363 Fax 512/239-6377

Docket Clerk
TCEQ Office of the Chief Clerk (MC 105)
P. O. Box 13087
Austin, Texas 78711-3087
512/239-3300 Fax 512/239-3311

Attachment G

Bryan W. Shaw, Ph.D., *Chairman*
Carlos Rubinstein, *Commissioner*
Toby Baker, *Commissioner*
Zak Covar, *Executive Director*

TEXAS COMMISSION ON ENVIRONMENTAL QUALITY

Protecting Texas by Reducing and Preventing Pollution

June 29, 2012

To: Persons on the attached service list (by mail and facsimile as indicated)

Re: Request for remand of Prop 2 Use Determination Application Nos. 07-11914, 07-11966, 07-11971, 07-11969, 07-11994, and 07-11926 submitted under TCEQ Docket Nos. 2008-0830-MIS-U; 2008-0831-MIS-U; 2008-0832-MIS-U; 2008-0849-MIS-U; 2008-0850-MIS-U; and 2008-0851-MIS-U.

On June 18, 2012, the Executive Director (ED) filed a request (served on each of the parties for the respective use determination appeals) under 30 TAC § 17.25(d) for remand of the following use determination applications for further processing:

- Application No. 07-11914, Tenaska Gateway Partners, Ltd, Rusk County (TCEQ Docket No. 2008-0830-MIS-U);
- Application No. 07-11966, Freestone Power Generation, L.P., Freestone County (TCEQ Docket No. 2008-0831-MIS-U);
- Application No. 07-11971, Borger Energy Associates, L.P., Hutchinson County (TCEQ Docket No. 2008-0832-MIS-U);
- Application No. 07-11969, Brazos Valley Energy Center, L.P., Fort Bend County (TCEQ Docket No. 2008-0849-MIS-U);
- Application No. 07-11994, Freeport Energy Center, L.P., Brazoria County (TCEQ Docket No. 2008-0850-MIS-U); and
- Application No. 07-11926, Navasota Wharton Energy Partners, L.P., Wharton County (TCEQ Docket No. 2008-0851-MIS-U).

Section 17.25(d) provides that "the general counsel may remand a matter from the commission's agenda to the executive director if the executive director ... requests a remand." Pursuant to 30 TAC § 17.25(d), this letter grants the ED's request to remand the above-listed applications to the ED for further processing. The General Counsel notes that any revised use determination that may subsequently be issued by the ED will be subject to the appeals process set forth in § 17.25 of the Commission's rules.

If you have any questions about this matter, please contact Jim Rizk, Assistant General Counsel, at 512/239-5530.

Very truly yours,

Les Trobman
General Counsel

Mailing List

Mailing List
Prop 2 Use Determination Application
Nos. 07-11914, 07-11966, 07-11971, 07-11969, 07-11994, and 07-11926
TCEQ Docket Nos. 2008-0830-MIS-U; 2008-0831-MIS-U; 2008-0832-MIS-U;
2008-0849-MIS-U; 2008-0850-MIS-U; and 2008-0851-MIS-U

Terry W. Decker, RRP/CTA/RTA
Chief Appraiser
Rusk County Appraisal District
P.O. Box 7
Henderson, Texas 75653-0007
903/657-3578 FAX 903/657-9073
tdecker@ruskcad.org

Bud Black, RPA/CTA
Chief Appraiser
Freestone Central Appraisal District
218 North Mount Street
Fairfield, Texas 75840
903/389-5510 FAX 903/389-5955
general.info@freestoncad.org

Diana Hooks, RPA/RTA
Chief Appraiser
Hutchinson County Appraisal District
P.O. Box 5065
Borger, Texas 79008-5065
806/274-2294 FAX 806/273-3400
hcad3@amaonline.com

Glen Whitehead, RPA
Chief Appraiser
Fort Bend County Central Appraisal District
2801 B. F. Terry Blvd.
Rosenberg, Texas 77471-5600
281/344-8623 FAX 281/762-9666
glenwhitehead@fbcad.org

Cheryl Evans
Chief Appraiser
Brazoria County Appraisal District
500 North Chenango Street
Angleton, Texas 77515
979/849-7792 FAX 979/849-7984
bcad@brazoriacad.org

Tylene Gamble
Chief Appraiser
Wharton County Appraisal District
308 East Milam Street
Wharton, Texas 77488-4918
979/532-8931 FAX 979/532-5691
whartoncad@sbcglobal.net

Pritchard & Abbott, Inc.
Attn: Mr. C. Wayne Frazell
4900 Overton Commons Court
Fort Worth, Texas 76132-3687
817/926-7861 FAX 817/927-5314
wfrazell@pandai.com

David D. Johnson
Tenaska Gateway Partners, Ltd.
1044 N 115th St., Suite 400
Omaha, Nebraska 68154-4446
402/691-9500 FAX 402/691-9226

Freestone Power Generation, L.P.
717 Texas, Suite 1000
Houston, Texas 77002

Borger Energy Associates, L.P.
7001 Boulevard 26, Suite 310
North Richland Hills, Texas 76180

Brazos Valley Energy, L.P.
717 Texas, Suite 1000
Houston, Texas 77002

Freeport Energy Center, L.P.
4100 Underwood Road
Pasadena, Texas 77507

Navasota Wharton Energy Partners LP
403 Corporate Woods
Magnolia, Texas 77354

Greg Maxim
Dennis Deegear
Duff & Phelps LLC
919 Congress Ave., Suite 1450
Austin, Texas 78701
512/671-5580 FAX 512/671-5501
gregrory.maxim@duffandphelps.com
dennis.deegar@duffandphelps.com

Justin Hyland
Leo Scherrer
717 Texas Avenue
Houston, Texas 77002
713/830-8873 FAX 713/830-8670
hylandj@calpine.com
lscherrer@dow.com

Hugh L. Landrum & Associates
Attn: Mr. Hugh L. Landrum, Jr.
12621 Featherwood, Suite 325
Houston, Texas 77034
281/484-7000 FAX 281/484-7272
hughjr@hughlandrum.com

Daniel Long
TCEQ Environmental Law Division MC 173
P.O. Box 13087
Austin, Texas 78711-3087
512/239-0600 FAX 512/239-0606

Susana M. Hildebrand, P.E.
TCEQ Chief Engineer's Office MC 168
P.O. Box 13087
Austin, Texas 78711-3087
512/239-4900 FAX 512/239-6188

Chance Goodin
TCEQ Chief Engineer's Office MC 206
P.O. Box 13087
Austin, Texas 78711-3087
512/239-6335 FAX 512/239-6188

Robert Martinez
TCEQ Environmental Law Division MC 173
P.O. Box 13087
Austin, Texas 78711-3087
512/239-0600 FAX 512/239-0606

Blas Coy
TCEQ Office of Public Interest Counsel MC 103
P.O. Box 13087
Austin, Texas 78711-3087
512/239-6363 FAX 512/239-6377

Docket Clerk
TCEQ Office of Chief Clerk MC 105
P.O. Box 13087
Austin, Texas 78711-3087
512/239-3300 FAX 512/239-3311

Attachment H

Bryan W. Shaw, Ph.D., *Chairman*
Carlos Rubinstein, *Commissioner*
Toby Baker, *Commissioner*
Zak Covar, *Executive Director*

TEXAS COMMISSION ON ENVIRONMENTAL QUALITY

Protecting Texas by Reducing and Preventing Pollution

July 10, 2012

Mr. Greg Maxim
Director
Duff and Phelps, LLC
919 Congress Ave Ste 1450
Austin, Texas 78701

Re: Notice of Negative Use Determination
Navasota Wharton Energy Partners, LP
Colorado Bend Energy Center
3821 S. State Hwy 60
Wharton (Wharton County)
Application Number: 07-11926; Tracking Number: DPCOBendB

Dear Mr. Maxim:

This letter responds to Navasota Wharton Energy Partners, LP's Application for Use Determination for the Colorado Bend Energy Center, remanded to the executive director on June 29, 2012, pursuant to the Texas Commission on Environmental Quality's (TCEQ) Tax Relief for Pollution Control Property Program

The TCEQ has completed the review for application #07-11926 and has issued a Negative Use Determination for the property in accordance with Title 30 Texas Administrative Code (TAC) §17.4 and §17.6. Heat recovery steam generators are used solely for production and, therefore, are not eligible for a positive use determination.

Please be advised that a Negative Use Determination may be appealed. The appeal must be filed with the TCEQ Chief Clerk within 20 days after the receipt of this letter in accordance with 30 TAC §17.25.

If you have questions regarding this letter or need further assistance, please contact Ronald Hatlett of the Tax Relief for Pollution Control Property Program by telephone at (512) 239-6348, by e-mail at ronald.hatlett@tceq.texas.gov, or write to the Texas Commission on Environmental Quality, Tax Relief for Pollution Control Property Program, MC-110, P.O. Box 13087, Austin, Texas 78711-3087.

Sincerely,

Chance Goodin, Team Leader
Stationary Source Programs
Air Quality Division

CG/RH

cc: Chief Appraiser, Wharton County Appraisal District, 308 E. Milam St., Wharton, Texas 77488-4918

TCEQ DOCKET NO. 2008-0851-MIS-U

APPEAL OF EXECUTIVE DIRECTOR'S NEGATIVE USE DETERMINATION ISSUED TO CER-COLORADO BEND ENERGY LLC (FORMERLY NAVASOTA WHARTON ENERGY PARTNERS LP) (NO. 07-11926)	§ § § § § §	TEXAS COMMISSION ON ENVIRONMENTAL QUALITY

2012 OCT 30 PM 2:28
CHIEF CLERKS OFFICE
TEXAS COMMISSION ON ENVIRONMENTAL QUALITY

CER-COLORADO BEND ENERGY LLC'S (FORMERLY NAVASOTA WHARTON ENERGY PARTNERS LP) REPLY TO RESPONSE BRIEFS

CER-Colorado Bend Energy, LLC ("Colorado Bend" or "Applicant") files this Reply to the Responses of the Executive Director and Office of Public Interest Counsel ("OPIC") regarding the appeal of the negative use determination issued by the Executive Director on July 10, 2012.

Colorado Bend refers the Commissioners to its Appeal Brief for a complete history on the Pollution Control Property Program and the procedural history of this case.[1] This Reply Brief will not reiterate that background, but instead focus on the arguments made by the Executive Director and OPIC. Following a brief summary of Applicant's argument, Parts II-VII of this Reply Brief detail why the arguments made by the Executive Director, and OPIC in support of the negative use determination are a misapplication of Texas law, are based on policy concerns outside of the Agency's purview, and are founded on an inadequate technical evaluation.

I. Summary of Argument

The various arguments from the Executive Director and OPIC go to great lengths to explain why the Executive Director is completely reversing course since issuing 25 positive use determinations to essentially the same type of equipment that is the subject of this appeal. Yet, all the Response Briefs miss the fundamental underlying point of the pending appeals – that the express language and structure of Texas Tax Code §§11.31(k-m) makes clear that the Executive Director does not have the discretion to issue negative use determinations to equipment listed in Texas Tax Code §11.31(k). In other words, the question is not whether the equipment is pollution control property – the legislature has already determined that it is. The question is how much of a percentage positive use determination should be issued.

This appeal should be granted and the negative use determinations remanded, so the Executive Director can conduct the review necessary to ensure that the TCEQ does the job the legislature has instructed them to do – to acknowledge the legislatively-established pollution control benefits of the equipment in question and then determine the percentage of positive use determination for the equipment in question given the concurrent pollution control and

[1] CER – Colorado Bend Energy LLC – Appeal of July 10, 2012 Negative Use Determinations, July 31, 2012.

production benefits resulting from the thermal efficiency improvements of the heat recovery steam generators (HRSGs) and ancillary equipment, including enhanced steam turbines.

II. Procedural Errors

A. The General Counsel's Remand Did Not Comply with the Statutory Provisions

As discussed at length in the Applicant's appeal brief, on May 1, 2008, the Executive Director issued positive used determinations for 25 HRSG applications, six of which were appealed ("Group I applications"). The appeal of these positive use determination and the five other similarly situated positive use determinations were scheduled to appear on the Commission's Agenda to be held on February 25, 2009. However, two days prior to the Agenda, the General Counsel granted the Executive Director's Motion for Continuance, continuing the matter "indefinitely."[2].

On June 18, 2012, almost three and a half years after the Commission indefinitely continued the matter on its Agenda, the Executive Director requested that the General Counsel remand the six appealed used determinations back to the Executive Director for "further processing."[3] On June 29, 2012, before the Commission had taken up the original appeal of the positive use determination, the General Counsel remanded the matter back to the Executive Director[4] who subsequently issued a negative use determinations for the appealed use determinations.[5]

The General Counsel's remand of the appeal under 30 TAC §17.25 violated the clear provisions of Texas Tax Code §11.31(e). Section 11.31(e) details the appeals process for use determinations, stating "[t]he commission shall consider the appeal at the next regularly scheduled meeting of the commission for which adequate notice may be given." (emphasis added). Section 11.31(e) adds that "[t]he Commission may remand the matter to the executive director for a new determination or deny the appeal and affirm the executive director's determination." Thus the Commission is not only required to consider the matter at the next Agenda meeting, but the Commission must vote to determine whether to affirm the appeal and remand the matter to the Executive Director or deny the appeal and affirm the original use determination. These two courses of action are the only two the Commission may take and the statute does allow for either of them to be delegated to the General Counsel.

The Executive Director, however, argues in its Response Brief that the appeals process in §11.31(e) does not preclude the General Counsel from remanding the Group I applications. Specifically, the Executive Director argues that the General Counsel's remand was proper due to the provisions in the Texas Water Code §5.110(d), which allows the Commission to delegate

---

[2] TCEQ General Counsel Letter granting the Executive Director's Motion for Continuance, Feb. 23, 2009 (Attachment F in Applicant's Appeal).

[3] Executive Director's Request for Remand of Applications, June 18, 2012 (Attachment G in Applicant's Appeal).

[4] TCEQ General Counsel Letter granting the Executive Director's Request for Remand of Prop 2 Use Determination Applications, June 29, 2012 (Attachment H in Applicant's Appeal).

[5] Notice of Negative Use Determination issued to Colorado Bend Energy Center, July 10, 2012 (Attachment B in Applicant's Appeal).

duties to the General Counsel.[6] Section 5.110(d) states "[t]he general counsel shall perform the duties and may exercise the powers specifically authorized by this code or delegated to the general counsel by the commission." The Executive Director goes on to say that nothing in §11.31 prohibits the Commission from delegating this duty.[7]

In this instance, the Commission only has authority to either deny the appeal or affirm the appeal and remand the matter to the Executive Director. The Commission can only delegate the authority it has been granted under the statute; it cannot delegate authority that the Commission itself does not have.[8] The Executive Director is essentially arguing that the Commission delegated its decision making authority regarding the appeal of the positive use determinations to the General Counsel, who then made the determination that the appeal should be granted and therefore, the matter should be remanded back to the Executive Director for further consideration. However, in remanding the matter to the Executive Director, the General Counsel did not consider the matter at a formal Commission Agenda as required by the statute and failed to affirm the appeal. Neither the General Counsel nor the Commission actually complied with the statutory requirements.

In the past, when the Commission has delegated authority to the General Counsel, it has done so by adopting a formal order.[9] In those orders, the specific authority delegated to the General Counsel is described in detail as well as the Commission's reasoning behind the delegation. No such order delegating authority to the General Counsel to consider use determination appeals and make final agency determinations in those matters was ever adopted by the Commission.

Finally, the Executive Director's Motion to Remand the matter was premised on the General Counsel's authority to remand use determination appeals as found in 30 TAC § 17.25(d). The General Counsel specifically authorized the remand based on his authority in §17.25(d). However, §17.25(d) had not been adopted when the Group I applications were filed nor when the positive use determinations were issued by the Executive Director. As OPIC properly points out, "The Tax Code does not appear to give the TCEQ authority to remand a use determination appeal before the Commission considers the appeal at the next practical Agenda." 30 TAC 17.25(d) was not in effect when the 2008 Group I appeals were filed. Remanding the matter under a rule that was not in effect when the Appellant submitted its application, and has no basis in the governing statute, would be improper."[10]

---

[6] Executive Director's Response to the Appeals Filed on the Negative Use Determinations for the Heat Recovery Steam Generator Applications ("Executive Director Response Brief"), October 4, 2012, p. 12.

[7] *Id.*

[8] *See Kids with Disabilities v. Tex. Educ. Agency*, 112 S.W.3d 234, 238 (Tex.App.—Austin, 2003) (stating, "[a]n agency may not, however, exercise what is effectively a new power on the theory that such exercise is expedient for the agency's purposes."); *Sexton v. Mount Olivet Cemetery Ass'n*, 720 S.W.2d 129, 137 (Tex.App.—Austin, 1986)(stating, "[i]t is axiomatic that such agencies are creatures of statute and have no inherent authority. They may, therefore, exercise only those specific powers conferred upon them by law in clear and express language, and no additional authority will be implied by judicial construction.

[9] *See* Texas Natural Resource Conservation Commission Resolution concerning the delegation of certain duties and authority of the General Counsel, Docket No. 2000-0327- RES, April 7, 2000 (Attachment 1).

[10] Office of Public Interest Counsel's Response to Appeal of Negative Use Determination ("OPIC Response Brief"), October 4, 2012, p. 8.

The fact that the General Counsel does have authority to remand matters before the Commission under 30 TAC §10.4(d) does not change the fact that the Commission can only delegate that authority granted to it by the Legislature. In this case the Legislature granted the Commission authority to deny the appeal or affirm the appeal and remand the matter to the Executive Director. Because the General Counsel did not execute one of the two possible actions that the statute allowed the Commission to perform, the General Counsel's action was improper, should be vacated, and the initial positive use determination should be reinstated and the appeal process finalized.

B. Application of 30 TAC §17.25(d) was Unconstitutionally Retroactive

As mentioned previously, the General Counsel stated that it had authority to remand this matter under 30 TAC §17.25(d). In response to concerns raised by Applicant that the application of §17.25(d) was improperly retroactive, the Executive Director argues that the use of this rule to remand the matter to the Executive Director was not retroactive because it was used after its effective date. Additionally, the Executive Director argues that rule is purely procedural in nature and does not affect a substantive or vested right of the Applicant.

When the Applicant submitted its use determination application and was granted a positive use determination, Applicant was entitled to a hearing at a Commission Agenda and the burden of proof to demonstrate that the Executive Director's use determination was improper lay with those parties appealing the use determination. Applicant is not arguing that it has a right to the Executive Director's initial positive use determination, it is arguing that by not considering the matter at a Commission Agenda as required by statute and subsequently issuing a negative use determination, requiring the Applicant to appeal the Executive Director's decision and bear the burden of proof in its appeal, the Applicant's substantive and vested rights have been significantly affected. Furthermore, the General Counsel's remand before the Commission considered the matter at an Agenda, stripped Applicant of its right to the public hearing that the statute calls for.[11]

C. The Executive Director Failed to Provide a Technical Evaluation of the Application

In its response brief, OPIC states that it defers to the Executive Director's technical evaluation of whether HRSGs qualify as pollution control equipment. However, in evaluating the completeness of the Executive Director's technical evaluation, OPIC states, "Although the July 10, 2012 letter provides no information as to why the Executive Director no longer considers HRSGs pollution control equipment, OPIC defers to the Executive Director on this technical issue and anticipates that the Executive Director's response brief will provide adequate explanation. Further explanation from the Executive Director as well as the Commission's Agenda discussion and subsequent order memorializing the Commissioners' decision on this matter will serve to complete the record."[12]

As the OPIC acknowledges, the Executive Director's negative use determinations completely failed to articulate any basis for the decisions. Now, after the fact, the Executive Director

[11] TEX. TAX CODE §11.31(e).

[12] OPIC Response Brief at 15.

attempts to justify what was clearly an arbitrary decision. As an attachment to its response brief, the Executive Director provided a one-page document entitled "Application Review Summary" for each of the appealed applications.[13] The inclusion of the Application Review Summary in its response brief is the first time the Executive Director made this document available to Applicant and the public. By failing to provide this document to the Applicant until filing its response brief, the Executive Director prevented the Applicant from evaluating the technical basis of the Executive Director's determination before the deadline for appeals had passed. This approach to technical review and documentation and distribution of same sets a bad precedent, is highly prejudicial, and should not be allowed.

Furthermore, even if the Executive Director had provided this document to the Applicant, the Application Review Summary is woefully insufficient, as it provides no discussion of the technical merits of the Executive Director's conclusion that HRSGs and steam turbines are used wholly for production purposes. It states, "The Application was remanded to the executive director on 6/29/2012, and on 7/10/2012, a negative use determination was issued stating that heat recovery steam generators are used solely for production and, therefore, are not eligible for a positive use determination."[14]

The fact that the Executive Director initially provided no information that could be considered a technical evaluation and that the Applicant had to wait until the Executive Director filed a response brief in this appeal to receive any information regarding its negative use determination offers yet another example of the Executive Director's failure to comply with the statutory requirements in §11.31. In fact, the Application Review Summary that the Executive Director did provide includes no analysis to support the Executive Director's position that HRSGs and ancillary equipment such as enhanced steam turbines are entirely production equipment and cannot be considered an actual technical evaluation. It merely restates the Executive Director's conclusion without providing any context, insight into, or technical basis for that conclusion. The Application Review Summary should be rejected as failing to comply with the statutory requirements in §11.31 and, even if taken into consideration by the Commissioners, provides no basis for the Executive Director's erroneous decision.

III. Texas Tax Code §§ 11.31(k) and 11.31(m) Do Not Provide the Executive Director With Authority to Issue a Negative Use Determination for Property Listed in §11.31(k)

The Executive Director and OPIC both argue that when the Legislature listed items in §11.31(k), it did not intend for these items to qualify for a positive use determination. Instead, they argue that the Legislature merely intended for the property listed in §11.31(k) to be reviewed to determine eligibility for a use determination.[15] This renders the legislative language meaningless. Section 11.31 must be construed to give effect to the Legislature's intent.[16] An agency or court should first attempt to determine this intent from the actual language used by the Legislature. That is, an agency or court should first look to the plain, ordinary meaning of the

[13] Executive Director's Application Review Summary for the Colorado Bend Energy Center (Attachment 2).

[14] *Id.*

[15] Executive Director Response Brief at 5-9; OPIC Response Brief at 12.

[16] *See* TEX. GOV'T CODE §312.005; *Gilbert v. El Paso County Hosp. Dist.*, 38 S.W.3d 85 (Tex. 2001).

statute's words.[17] Most importantly, "[i]f a statute is clear and unambiguous, [the courts] apply its words according to their common meaning without resort to rules of construction or extrinsic aids."[18]

Sections 11.31(k) and (m) direct that the Commission "shall determine that" heat recovery steam generators and enhanced steam turbine systems are "used wholly or partly as facility, device, or method for the control of air, water, or land pollution."[19] Other than the passing a rule to remove this equipment from an established list of pollution control equipment (based on compelling evidence that the equipment does not provide pollution control benefits), there is no option under the statute for TCEQ to determine that equipment listed in §11.31(k) is not pollution control equipment. Put simply, based on the language of the statute, if an item is listed in §11.31(k), the question is not 'whether the equipment is pollution control property', but instead should be 'what percentage is pollution control property.'

A. Section 11.31(k)-(l)

Section 11.31(k) states:

> "[t]he Texas Commission on Environmental Quality shall adopt rules establishing a nonexclusive list of facilities, devices, or methods for the control of air, water, or land pollution, which must include: ...
> (8) heat recovery steam generators; [and]
> (10) enhanced steam turbine systems."[20]

The very purpose of this section is to provide a list of equipment that the Legislature determined was "for the control of air, water, or land pollution." It seems incredibly far-fetched to argue that the Legislature provided a list of equipment that it specifically designated as "for the control of pollution" but did not intend for the equipment listed therein to be considered pollution control equipment.

Moreover, the Legislature included language describing an option to add items to the §11.31(k) list when it stated in subsection (k)(18) "any other equipment designed to prevent, capture, abate, or monitor nitrogen oxides, volatile organic compounds, particulate matter, mercury, carbon monoxide, or any criteria pollutant."[21] A plain reading of this language demonstrates that the Legislature had determined that each of the previously listed items were "equipment designed to prevent, capture, abate, or monitor" pollution.

Furthermore, §11.31(l) requires that the TCEQ must update the §11.31(k) list at least once every three years. An item may be removed from the list, but only if the TCEQ "finds compelling evidence to support the conclusion that the item does not provide pollution control benefits." By

---

[17] *See* TEX. GOV'T CODE §312.002(a); *Am. Home Prods. Corp. v. Clark*, 38 S.W.3d 92, 95-96 (Tex. 2000); *Crimmins v. Lowry*, 691 S.W.2d 582, 584 (Tex. 1985).

[18] *In Re Nash*, 220 S.W.3d 914, 917 (Tex. 2007).

[19] TEX. TAX CODE §11.31 (k) & (m).

[20] TEX. TAX CODE §11.31(k).

[21] TEX. TAX CODE §11.31(k)(18).

including HRSGs and enhanced steam turbines on the list, the Legislature determined that these items provided a pollution control benefit unless and until the TCEQ found compelling evidence to the contrary. The TCEQ has not provided compelling evidence that HRSGs and ancillary equipment such as enhanced steam turbines do not provide a pollution control benefit. Nor has the TCEQ initiated a rulemaking to remove these items from the list contemplated in §11.31(k).

To summarize, in this statute, the Legislature states in § 11.31(k)-(l) that the equipment listed in §11.31(k): 1) is "for the control of air, water, or land pollution"; 2) is "designed to prevent, capture, abate, or monitor" pollution; and 3) can only be removed from the statutorily-directed list of pollution control equipment if the Executive Director provides "compelling evidence" that the equipment "does not provide pollution control benefits." To suggest that the Legislature placed the list in the statute as mere surplusage and intended for TCEQ to have the discretion to issue negative use determinations on the ad hoc basis currently being proposed stretches the bounds of any reasonable interpretation and effectively disregards the language of the statute and intent of the Legislature.

B. Section 11.31(m)

Section 11.31(m) provides the Executive Director with a very clear directive about how to handle applications for items listed in §11.31(k). Section 11.31(m) states:

> "Notwithstanding the other provisions of this section, if the facility, device, or method . . . is . . . included on the list adopted under Subsection (k), the executive director of the Texas Commission on Environmental Quality, . . ., shall determine that the facility, device, or method described in the application is used wholly or partly . . . for the control of air, water, or land pollution . . ." (emphasis added).

A close reading of this subsection reveals that if an entity submits an application for a pollution control property tax exemption for an item that is listed in §11.31(k), the Executive Director has 30 days within which, he must determine that the item described in the application is used wholly or partly for the control of air, water, or land pollution. Furthermore, this section provides that the Executive Director must make this determination without regard to whether information about the environmental benefit of the item is provided in the application. The only reasonable reading of this language is that the Legislature had determined that the items listed in §11.31(k) were pollution control property and, thus, did not want the TCEQ to require a demonstration that an environmental benefit existed or get bogged-down in that determination.

The Executive Director's brief then states that that tax exemptions must be strictly construed against a taxpayer. In this case strict construction requires, at minimum, a partial positive use determination because the statute recognizes the equipment as pollution control property.. When interpreting legislation, courts are generally required to ascertain and apply the plain meaning of a statute.[22] And, while any legislative grace provided through an express deduction or exemption from a tax is strictly construed against the taxpayer,[23] the statute cannot be so narrowly construed

---

[22] *See Fitzgerald v. Advanced Spine Fixation Syst., Inc.*, 996 S.W.2d 864, 865-66 (Tex. 1999) (courts must apply plain meaning of statute).

[23] *Upjohn Co. v. Rylander*, 38 S.W.3d 600, 606 (Tex. App. — Austin 2000, pet. denied).

as to avoid the plain meaning of the words used or to destroy the very purpose of an exemption. The Austin Court of Civil Appeals has cited with approval, the following correct reasoning with respect to the scope of a tax exemption:

> "[T]he . . . exemption must be viewed in light of the legislative intent . . . Although construction of exemption statutes is generally to be construed against the taxpayer, the overall scheme and intent of the legislation must not be overlooked."[24]

As described above, the statutory language clearly indicates that the Legislature considers the items listed in §11.31(k) as equipment for the control of air, water, or land pollution. This is further supported by the fact that, under subsection (m), applicants for items listed in §11.31(k) are not required to submit information regarding the environmental benefit. This is not to suggest that the equipment does not have to provide an environmental benefit, it merely demonstrates that the Legislature already determined that these pieces of equipment by their very nature provide an environmental benefit and therefore, it is not necessary for applicants to provide this information to the Executive Director.

It is also important to note the textual difference between the limiting instructions given in §11.31(m) and the discretion afforded under §11.31(d). For equipment not listed in §11.31(k), §11.31(d) allows the TCEQ discretion to "determine if [equipment] is [pollution control property]" (emphasis added)." However, §11.31(m) limits that discretion by using the phrase "determine that" instead of "determine if." As previously discussed, §11.31 must be construed to give effect to the Legislature's intent.[25] Furthermore, "[w]ords and phrases shall be read in context and construed according to the rules of grammar and common usage."[26]

Considering the clear and unambiguous language, as well as the structure, of §11.31 (d), (k), (l) & (m), three things are clear:

(1) the equipment listed in §11.31(k) must be considered pollution control property, thereby precluding a negative use determination by the TCEQ;

(2) the only method by which the TCEQ could issue a negative use determination to an item on the 11.31(k) list would be to go through rulemaking and, based compelling evidence demonstrating that an item does not provide pollution control benefits, remove that item from the statutorily-directed list; and

(3) the TCEQ is afforded discretion to issue partial positive use determinations to take into account concurrent pollution control and production benefits of equipment.

Appellant respectfully submits that the debate about items 1 and 2 end, so the TCEQ can do the job the Legislature has asked it to do under item 3.

---

[24] *Sharp vs. Tyler Pipe*, 919 S.W.2d 157 (Tex. App.—Austin 1996, *writ denied*).

[25] *See* TEX. GOV'T CODE §312.005; *Gilbert v. El Paso County Hosp. Dist.*, 38 S.W.3d 85 (Tex. 2001).

[26] TEX. GOV'T CODE §311.011(a).

C. Executive Director's Legislative Acceptance Argument is Without Merit

After claiming that TCEQ can ignore the Legislature's instruction to recognize the equipment listed in §11.31(k) as pollution control property, the Executive Director then proceeds to argue that the Legislature has acquiesced in the TCEQ's current refusal to follow the statute.[27] Not only does the Executive Director's argument lack merit, the doctrine it cites actually supports the Appellants' position. As evidence of how it intended to implement §§11.31(k-m), the Executive Director relies not upon an actual case applying the statute or the express language of a rule implementing the statute, but rather a reference in a rulemaking preamble. What the Executive Director fails to mention is that, the last two times the Legislature was in session, the Executive Director had already applied §§11.31(k-m) to grant 100% positive use determinations for HRSGs in 25 separate instances. If the legislative acceptance argument has any applicability here, it would be that the Legislature's acceptance is of the Commission's implementation of §11.31(k) as applied to the 25 HRSG applications.

Even if the Commission were to conclude that the Executive Director's previous application of §§11.31(k-m) as applied to HRSG applications does not negate the legislative acceptance argument, a review of the case law cited by the Executive Director demonstrates that the legislative acceptance argument would still not apply in the instant case. In the case cited by the Executive Director supporting the legislative acceptance argument, *Grocers Supply Co. v. Sharp*, the Court actually denied applying the legislative acceptance argument because the Agency's interpretation of the statute was uncertain over time and the statute was unambiguous.[28] The Court stated, "We cannot conclude that the legislature's reenactment of the exemptions without change constitutes an acceptance of an interpretation contrary to the precedent."[29] The only previous formal action that the TCEQ ever took regarding the Group I HRSG applications was to grant 100% percent positive use determinations. By granting a 100% positive use determination to HRSG applications, it would appear that the Agency's interpretation was that HRSGs qualified as pollution control property.

Even more importantly, §11.31 is not ambiguous. It has already been stated, but bears repeating, §11.31 must be construed to give effect to the Legislature's intent.[30] The legislative acceptance argument falls flat when the statute is clear, for "[n]either legislative ratification nor judicial deference to an administrative interpretation can work a contradiction of plain statutory language."[31] When the statutory provisions in the statute clearly contradict the agency's interpretation, the agency's erroneous interpretation should be given no deference. While the Executive Director may now interpret the statute so that equipment listed in §11.31(k) could be determined not to be pollution control property, the statute does not allow for such an interpretation.

---

[27] Executive Director's Response Brief at 7.

[28] *Grocers Supply*, 978 S.W.2d at 644.

[29] *Id.*

[30] *See* TEX. GOV'T CODE §312.005; *Gilbert v. El Paso County Hosp. Dist.*, 38 S.W.3d 85 (Tex. 2001).

[31] *See Pretzer v. Motor Vehicle Bd.*, 138 S.W.3d 908, 915 (Tex. 2004); *see also Barchus v. State Farm Fire & Cas. Co.*, 167 S.W.3d 575, 578 (Tex. App.—Houston [14th Dist.] 2005, pet denied).

IV. Failure to Comply with the Commission Rules and the Texas Administrative Procedures Act

Under the Administrative Procedures Act ("APA") states agencies are required to follow certain formal procedures before adopting and applying any "rule." A "rule" is defined as "a state agency statement of general applicability that...implements, interprets, or prescribes law or policy."[32] In reaching and applying its new interpretation of §§11.31(k) and 11.31(m), the Commission failed to follow the procedures of the APA and should therefore, be disregarded.

The Executive Director argues that rulemaking was not necessary for the Executive Director or the Commission to issue negative use determinations for the HRSG applications. The Executive Director states that the determination that each of the HRSG applications should be denied was the result of a case-by-case review of each application and that the Executive Director generated a "technical review" for each application. Finally, the Executive Director states the change in interpretation is not of a rule of general applicability because it affects a limited number of Applicants for a use determination.[33]

The Executive Director's argument that APA rulemaking requirements do not apply to the unexplained and undocumented statement of the Executive Director that "[h]eat recovery steam generators are used solely for production; therefore, are not eligible for a positive use determination" is without merit. There was no case-by-case analysis in the Executive Director's general negative use determination. The statement is a rule as defined by the APA; in fact it is a statement that applies generally to an identified segment or class of the regulated public (HRSG owners) and seeks to implement, interpret and prescribe law or policy. In addition, the statement, in effect, amends 30 TAC §§17.4 and 17.17 which previously were adopted pursuant to notice and comment procedure under APA §§ 2001.023, 2001.025, 2001.029 and 2001.033.

The statement is an "interpretive rule," defined by Professor Ron Beal as an agency statement made outside of a contested case hearing or notice and comment rule-making by which the agency sets forth how the agency intends to interpret and apply a statute or substantive rule to all persons similarly situated.[34] The statement is a rule if it meets a four part test according to Professor Beal:

> (1) It is issued by an agency board, commission, executive director or other officer vested with the power to act on behalf of the agency;
>
> (2) It is issued with the intent of the agency to notify persons or entities that are similarly situated or within a class described in general terms;

---

[32] TEX. GOV'T CODE § 2001.003(6).

[33] Executive Director Response Brief at 17.

[34] Ron Beal, *A Miry Bog Part II: UDJA and APA Declaratory Judgment Actions and Agency Statements Made Outside a Contested Case Hearing Regarding the Meaning of the Law*, 59 Baylor L. Rev. 267, 270 (2007); see also Ron Beal, *The APA and Rulemaking: Lack of Uniformity Within a Uniform System*, 56 Baylor L. Rev. 1, 29-46 (2004).

(3) It is issued to notify those persons or entities of the agency's interpretation of a statutory provision [or substantive rule] which has been crystallized following reflective examination in the course of the agency's interpretive process;

(4) Such interpretation was not labeled as tentative or otherwise qualified by arrangement for consideration at a later date.

The Executive Director's negative use determinations meet every part of this test.

An interpretive rule, like the Executive Director's negative use determinations, is invalid in Texas for failure to adhere to mandatory APA notice and comment procedure.[35] In *Combs v. Entertainment Publications, Inc.*, the Comptroller had issued, in a 2007 letter ruling (Accession No. 200704926L), guidelines for determining whether a fundraising firm or a school organization was a "seller" for purposes of collecting sales tax. In March and April of 2008, the Comptroller issued two letters essentially changing the import or interpretation of the 2007 letter. Plaintiff filed suit for injunctive relief against enforcement of the changed interpretation, sought declaratory relief under Section 2001.038 of the APA that the "rule" embodied in the 2008 letters was invalid, and sought declaratory relief under the Uniform Declaratory Judgments Act ("UDJA") that the Comptroller exceeded her statutory authority under §151.024 of the tax code in adopting that "rule" and applying §151.024 to the plaintiff.

The Court of Appeals affirmed the district court ruling that it had jurisdiction under §2001.038 of the APA and that the 2008 letters were invalid because of the failure to comply with the notice and comment procedural requirements of the APA. Also affirmed was the trial court's injunction directing the Comptroller to desist and refrain from implementing and enforcing the "new" rule unless and until the Comptroller properly enacted the rule pursuant to APA procedures, or "until final judgment of the trial court."[36]

The Executive Director's attempted distinctions of *El Paso Hospital*, *Texas Mutual*, and *WBD Oil* are inappropriate. In *El Paso Hospital* an agency interpretive rule contradicted a previously adopted notice and comment rule. Similarly, the Executive Director's negative use determinations are inconsistent with Tax Code §11.31 and 30 TAC §§17.4 and 17.17. In *Texas Mutual* the court did not, as the Executive Director suggests, hold that if the statement made in the staff report "was a statement that fell within the definition of a rule," that somehow it could avoid scrutiny as a rule because "it is well established that not every administrative pronouncement is a rule within the meaning of the APA."[37] The Court did quote language from uses prior to *Combs*, "that not every administrative pronouncement is a rule within the meaning of the APA."[38] However, those prior cases did not involve agency statements that met the four-point test set out above.

---

[35] *Combs v. Entertainment Publications, Inc.*, 292 S.W.3d 712, 723-24 and footnote 6 (Tex.App.—Austin 2009, no pet.)

[36] *Id.* at 719.

[37] Executive Director's Response Brief at 16.

[38] *Texas Mutual Insurance Co. v Vista Community Medical Center*, LLP., 275 S.W.3d 538, 555 (Tex.App.—Austin 2008).

In addition, the court statements misconstrued by the Executive Director were numerous. The plaintiff in *Texas Mutual* sought a declaratory judgment regarding the interpretation of a substantive rule. The Court of Appeals reversed the trial court judgment and upheld the agency interpretation of the rule that had been adopted pursuant to notice and comment procedure.

Similarly, the Executive Director's reference to *WBD Oil* is most unusual. The Executive Director recognizes the "field rules" at issue in *WBD* were created through a contested case hearing. Under the APA parties to a contested case hearing are entitled to notice of an adjudicative type hearing, presentation of evidence, cross examination of witnesses under oath, and issuance of a final order confirming findings of fact and conclusions of law.[39] No such procedure was followed prior to the Executive Director's issuance of the unsupported and undocumented statement of July 10, 2012, and all of *WBD's* interesting statements about the differences between agency adjudications in contested cases and agency rule-makings are completely irrelevant since Applicant has not been afforded either fair procedure in this matter.[40]

V. The Record Supports a Positive Use Determination and Clearly Contradicts a Negative Use Determination

A. HRSGs Qualify as Pollution Control Property Under §11.31

The Applicant's HRSGs can be defined as pollution control property based on the prevention of NOx emissions from natural gas use efficiencies. Under Tax Code §11.31(a), "[a] person is entitled to an exemption from taxation of all or part of real and personal property that the person owns and that is used wholly or partly as a facility, device, or method for the control of air, water, or land pollution." (emphasis added). The statute defines "a facility, device, or method for the control of air, water, or land pollution" as:

> "[a] structure, building, installation excavation, machinery, equipment or device, and any attachment or addition to or reconstruction, replacement or improvement of that property, that is used, constructed, acquired, or installed wholly or partly to meet or exceed rules or regulations adopted by any environmental protection agency of the United States, this state, or a political subdivision of this state for the prevention, monitoring, control, or reduction of air, water, or land pollution."

In fact, the Executive Director conducted a technical review of 25 HRSG applications and on May 1, 2008, issued positive use determinations for these applications stating, "[t]his equipment is considered to be pollution control equipment and was installed to meet or exceed federal or state regulations."

---

[39] TEX GOV'T CODE §§2001.051, 2001.085, 2001.087, 2001.088, and 2001.141.

[40] *See Railroad Commission of Texas v. WBD Oil & Gas Co.*, 104 S.W.3d 69 (Tex. 2003).

B. Environmental Benefit

1. Recognition of Emission Avoidance as Pollution Control

The Executive Director argues that HRSGs are not used in any way to prevent, monitor, or control air, water, or land pollution. Specifically, the Executive Director states that a "HRSG does not remove air contaminants in the manner that a traditional pollution control device does" and that it has never recognized emission avoidance as pollution control.[41] In the Executive Director's view, a piece of equipment provides an environmental benefit only if it is used to remove air contaminants.

However, the statute provides that pollution control property is used "for the prevention, monitoring, control, or reduction of air, water, or land pollution."[42] It is true that HRSGs do not actually remove pollutants from a power plant's exhaust stream. The HRSGs pollution control value is its increased thermal efficiency, which when compared to a traditional single-cycle turbine unit, reduces the fuel needs for the same power outputs, while resulting in lower additional air emissions. It is important to note that the lower fuel consumption associated with increased fuel conversion efficiency not only reduces criteria pollutants such as NOx, but also reduces emissions of hazardous air pollutants, as well as carbon dioxide, which EPA is currently in the process of regulating under the Federal Clean Air Act.

The U.S. Environmental Protection Agency ("EPA") and other states recognize the use of energy efficiency as a measure of pollution control and/or pollution prevention[43] and at least one state using this method as part of their tax exemption programs.[44] Furthermore, many of the New Source Performance Standards ("NSPS"), which the TCEQ has incorporated into its own rules, use efficiency as a measure of compliance. If the installation of a HRSG allows a facility to meet its federal and state required emission performance standard, then by definition, the HRSG would be equipment that controls emissions.

2. Empirical Data Demonstrating Emissions Reductions Due to Use of HRSG

The Executive Director argues that the Applicants avoided emission argument is inadequate because it requires a comparison between a combined-cycle unit and a hypothetical alternative unit. The Executive Director goes on to state that "No Applicant has provided sufficient

---

[41] Executive Director Response Brief at 8.

[42] TEX. TAX CODE §11.31(b).

[43] *See* Memorandum from Brian McLean, Director of Office of Atmospheric Programs and Stephen Page, Director of Office of Air Quality Planning and Standards, *Guidance on SIP Credits for Emission Reductions from Electric-Sector Energy Efficiency and Renewable Energy Measures*, August 5, 2004, stating, "Energy efficiency ... inherently prevent[s] pollution from occurring."(See Attachment 3)

[44] See Ohio Revised Code, Section 5707.20(J)-(K) ("Thermal Efficiency Improvement" and "Thermal Efficiency Improvement Facility"), which qualifies HRSGs as an "Exempt Facility" under § 5707.20(E), which is eligible for an "exempt facility certificate" under § 5707.21. (See Attachment 4).

information as to why these hypothetical comparisons should be done, nor have they provided why the single-cycle plant or boiler are appropriate comparisons."[45]

As a threshold matter, as discussed above, the clear language and structure of §11.31(k-m) assume the pollution control benefits of HRSGs. So, the information the Executive Director complains about being missing is simply not required.[46]

Moreover, Applicant's appeal brief in Attachment D includes the very information the Executive Director seems to be looking for. That attachment contains monitoring data from the Barney Davis Power Plant during both pre- and post- repowering of that plant. This data confirms the assumptions regarding the air emissions reductions per pound of fossil fuel use. Furthermore, as set out in the attached affidavit,[47] Ronald J. Coldeway, the Plant Manager at the Colorado Bend Energy Center states that he has reviewed this data as well as an affidavit provided by Mark Shepherd, Director of Environmental, Safety, and Health at the Barney Davis Power Plant and concurs that the emission data from the Barney Davis Power Plant confirms the emission reduction assumptions used in the avoided emissions methodology.

The Executive Director does, however, acknowledge that HB 3732 provided for an expedited review of applications for equipment listed in §11.31(k) that exempted applicants from submitting information regarding the anticipated environmental benefit. The fact that the Legislature removed the requirement to submit information regarding the environmental benefit for those applications under §11.31(k) is of critical importance. Not only did the Legislature consider the items listed in §11.31(k) as equipment "for the control of air, water, or land pollution," but it determined that no information was required regarding the environmental benefit of these items because it has already determined that these items provided an environmental benefit.

The Executive Director states that the removal of the requirement to submit environmental benefit information puts the Executive Director in a precarious position in determining whether an environmental benefit exists. Actually, in removing this requirement the Legislature acknowledged that an environmental benefit exists and that the Executive Director did not have to review this information for these particular applications. Instead of causing a precarious position for the Executive Director, it merely streamlined the application process for those applications in which an environmental benefit was known to exist.

The Executive Director then argues that the Legislature cannot extend a tax exemption beyond what is provided in the Constitution; and because the Constitution requires that property eligible for a pollution control property tax exemption must provide an environmental benefit, this requirement cannot be waived. First, it is not within the Executive Director's statutory charge or authority to determine whether the Legislature's actions comply with the Constitution. Second, the requirement that property eligible for a pollution control property tax exemption must provide an environmental benefit has not been waived; the Legislature has already determined

---

[45] Executive Director Response Brief at 8.

[46] See 11.31(m) indicating that applicants for items listed in §11.31(k) are not required to submit environmental benefit information.

[47] Affidavit of Ronald J. Coldeway (Attachment 5).

that equipment listed in §11.31(k) provides an environmental benefit. The Legislature has merely left it to the TCEQ's discretion to determine what the percentage of a positive use determination should be.

C. Method of Pollution Control – TCEQ Precedent, the Attorney General's Interpretation, and the Legislature's Directive

As previously noted, the Executive Director argues that it has never recognized emissions avoidance as pollution control. This statement is not only patently untrue, but belies the fact that the Legislature has already determined that HRSGs do control pollution.

As noted in the Executive Director's response brief, on May 1, 2008, the Executive Director issued 100% positive use determinations for 25 HRSGs many of which cited emissions avoidance as the pollution control provided by HRSGs. While six of those applications were appealed and are now the subject of an administrative appeal, the remaining 19 applications have been issued a final 100% positive used determination based on emissions avoidance. The Executive Director has since stated that all of the 100% positive use determinations for HRSGs were made in error, but this does not change the fact that the Executive Director and the Commission has previously recognized emissions avoidance as pollution control.

Furthermore, the TCEQ recently adopted a Permit By Rule (PBR) for Natural Gas-Fired Combined Heat and Power Units.[48] In the preamble to the adoption of the Combined Heat and Power (CHP) PBR, the TCEQ states, "The Commission acknowledges the benefits and advantages of CHP as a means of providing efficient, reliable, and clean energy." As part of that PBR, TCEQ specifically provided that the emission limits for stationary natural gas engines would be measured in terms of air contaminant emissions per unit of total energy output.[49] HRSGs are recognized as a typical industrial CHP application. The fact that the TCEQ recognizes the pollution control benefits of this type of equipment in its permitting program should be given weight when evaluating the Executive Director's arguments in this case that similar equipment does not have pollution control benefits.

Furthermore, even if the Executive Director had never actually recognized emissions avoidance as pollution control, that does not change the fact that HRSGs are specifically listed in §11.31(k) as equipment "for the control of air, water, or land pollution."

The Attorney General's Office, in response to prior TCEQ requests for guidance regarding Section 11.31 has made it clear that equipment can serve as a method of pollution control, while also serving as production equipment, Applicant cites to Attorney General Opinion JC-0372. The Executive Director summarily dismisses Applicant's reliance on this opinion by stating, "Applicants misinterpret Attorney General Opinion JC-0372." Merely stating that the Applicant has misinterpreted the Attorney General opinion does not actually make it so. Furthermore, the arguments made by the Executive Director that §11.31 only applies to "traditional" or "add-on" pollution control devices are directly refuted by the Attorney General's opinion. Texas Attorney General Opinion JC-0372 (2001) expressly opined to the Chair of the Texas Natural Resource

[48] 30 TAC §106.513; 37 Tex.Reg. 6037-6049, August 10, 2012.

[49] 30 TAC §106.513(d).

Conservation Commission that "methods of production" can and do qualify as exempt pollution control property:

> "Section 11.31 is broadly written, and we believe its plain meaning is clear. It embraces any property, real or personal, "that is used wholly or partly as a facility, device, or method for the control of air, water or land pollution. . . ." (emphasis added).
>
> "Next, we consider whether section 11.31 excludes from its scope pollution-reducing production equipment. Significantly, the statute applies to property used "wholly or partly" for pollution control. See id. § 11.31(a). To qualify for the exemption, property must be used "wholly or partly" to meet or exceed environmental rules. See id. § 11.31(b). The term "wholly" clearly refers to property that is used only for pollution control, such as an add-on device. See Merriam Webster's Collegiate Dictionary 1351 (10th Executive Director. 1993) (defining "wholly" to mean "to the full or entire extent: ... to the exclusion of other things"). The term "partly," however, embraces property that has only some pollution-control use. See id. at 848 (defining "partly" to mean "in some measure or degree"). This broad formulation clearly embraces more than just add-on devices. Furthermore, that statute clearly embraces not only "facilities" and "devices" but also "methods" that prevent, monitor, control, or reduce pollution. "Methods" is an extremely broad term that clearly embraces means of production designed, at least in part, to reduce pollution. See id. at 732 (defining "method" to include "a way, technique, or process of or for doing something").[50]

This opinion refutes the arguments made by the Executive Director that production equipment cannot also serve to reduce pollution. It also fundamentally disproves the Executive Director and Appraisal District arguments that only "traditional" pollution control equipment or equipment that is "added" to a facility can qualify as pollution control property. The HRSGs and Steam Turbines are clearly used as engineering methods to comply with environmental laws and to control pollution and therefore, qualify for exemption under any valid rule or convention of statutory construction.

Significant reliance is placed by the Executive Director and OPIC on the *Mont Belvieu* opinion. Yet, there are three fundamental differences between the current appeal and the *Mont Belvieu* situation that make it clear that it does not support the Executive Director's position and, in fact, conflicts with it.

To begin with, the procedural posture of the appeal was fundamentally different in *Mont Belvieu*. As the *Mont Belvieu* Court emphasized, Mont Belvieu sought "a 100% positive use determination" for its brine storage pond system" and it "opted to stand or fall based on a claimed entitlement to a 100% positive use determination. . ."[51] That is a very different situation

---

[50] Texas Attorney General Opinion JC-0372 (2001) (emphasis added).

[51] *Mont Belvieu Caverns, LLC. Tex. Comm'n on Envtl. Quality*, No. 03-11-00442 CV, 2012 WL 3155763 at 10 (Tex. App.—Austin 2012).

than the current appeal where the question is not whether 100% is appropriate, but whether 0% is appropriate.

The distinct procedural posture leads to two different burdens of proof. All the TCEQ needed to demonstrate in *Mont Belvieu* is whether there was any productive value and then it could contend that 100% was inappropriate. The Court emphasized that *Mont Belvieu* acknowledged that its brine pond system was only "part" of the process by which it produces gas storage services for customers and that "subsections within section 11.31 contemplate – indeed require – that if property is not 'wholly' used for pollution control, TCEQ will limit any positive use determination to the proportion of the property that is." [52]

This is much different than the pending appeal where the TCEQ is claiming no pollution control benefit and all production benefit – the reverse of the *Mont Belvieu* situation. The TCEQ can no more dismiss the pollution control benefits of the HRSGs than Mont Belvieu could dismiss the productive value of its brine ponds.

A third distinguishing factor between *Mont Belvieu* and the current appeal is that the brine ponds in that case are not included on the 11.31(k) list like the HRSGs are. Therefore, the legislatively-established pollution control benefits of the equipment in question were not as clearly demonstrated as they are for HRSGs in the current appeal.

Therefore, read correctly, *Mont Belvieu* does not support the Executive Director's position. In fact, it actually contradicts it because it makes clear that the TCEQ is to distinguish the proportion of the property at issue that is used to control, monitor, prevent or reduce pollution from the proportion of the property that is used to produce goods or services and the proportion that is used to control pollution qualifies for the tax exemption. [53] As discussed at length above and below, this proposition is clearly established by the statute and recognized in Attorney General Opinion JC-0372.

As discussed at length above in Section III, the Legislature's directive to TCEQ is set out very clearly in 11.31(k-m). The debate about whether production equipment can also be pollution control equipment is abruptly ended by the basic fact that many items of production-related equipment are included on the 11.31(k) list which the statute expressly recognizes as pollution control equipment. There is plenty of additional evidenced discussed above and below to support the clear statutory language, but nobody states it more clearly than the author of HB 3732 when he stated:

> *One of the goals of the legislation this session was to ensure that TCEQ had the authority and direction from the legislature to recognize that pollution control benefits can be derived from the manner in which fuel is prepared and used, and from increasing the efficiency of certain facilities. By doing so, the amount of fuel needed and the total amount of pollution emitted can be reduced. I did not intend, nor do I support, an interpretation of anything in HB 3732 to prevent electric generating facilities from receiving exemptions for equipment simply because they*

[52] *Id.* at 15.

[53] *Id.* at 12.

also derive profit from a given piece of equipment or process. If it reduces pollution, it qualifies.(emphasis added).[54]

Although Appellant would not attempt to argue that a letter from an individual member of the legislature is controlling authority regarding legislative intent, the views of the author of the statute being interpreted are certainly worth considering. This is especially true in this case given that the Executive Director makes extensive legislative intent arguments that are in direct conflict with the written views of the bill's author.

D. HRSGs are Used to Meet/Exceed New Source Performance Standards (NSPS) for Electric Generating Facilities

The Executive Director includes a number of arguments in its Response Brief that attempt to cast doubt on whether HRSGs are specifically required to be installed by an environmental regulation. To begin with, the test is not that an environmental regulation specifically calls for a specific piece of equipment. Rather, the Constitutional and statutory test is whether the equipment is "used, constructed, acquired, or installed wholly or partly to meet or exceed [environmental] rules or regulations." There are two phrases that are critical in that test: (1) "wholly or partly" and (2) "meet or exceed."

By including the phrase "wholly or partly," the Constitutional Amendment and implementing legislation make it clear that the equipment need not have been installed due solely to the existence of an environmental regulation. Moreover, by including the phrase "meet or exceed," the Constitutional Amendment and legislation made it clear that the equipment in question may be more than the regulation calls for.

The Executive Director argues different things for different regulations that have applicability to the power plants impacted by the pending appeals, but the general basis of the Executive Director's argument is that there is not a sufficient nexus between the cited environmental regulations and the pollution control claimed by the Applicant.

As an initial matter, it should not go unnoticed that the Executive Director previously thought that the regulatory citation of the same or similar provisions as relied upon in the pending appeals were relied upon by the 25 applications for which the Executive Director previously issued 100% positive use determination.

It is also important to note that none of the July 10, 2012 Negative Use determinations claim that the referenced environmental regulation was inapplicable or insufficient. Instead, the Executive Director waited until it filed its response brief to this appeal to provide copies of previously prepared "Application Review Summaries" which summarily state that "the cited regulations do not require the installation of a heat recovery steam generator or steam turbine."[55] While the lack of any legal or technical evaluation is striking, what is even more egregious is the fact that the Executive Director's Application Review Summary indicates that the Executive Director

[54] Letter from Rep. Rick Hardcastle to Grace Montgomery, Deputy Director of Administrative Services at the TCEQ, August 1, 2007 (Attachment 6) (emphasis added).

[55] Executive Director's Application Review Summary for the Colorado Bend Energy Center (Attachment 2).

believes that an application for a positive use determination must cite to an environmental regulation that specifically requires the installation of a particular piece of equipment.

As noted above, the controlling statute says nothing of the sort. There is absolutely no requirement that before equipment is eligible for a tax exemption as pollution control property, an environmental regulation must specifically require that a specific piece of equipment be installed. Thus the Executive Director's "technical evaluation" completely misconstrues the statutory requirements and should be granted little weight.

Instead, the Commission must simply ask whether any environmental regulation exists that Applicant is meeting or exceeding through the use of the equipment for which an application for a use determination was submitted.

The Executive Director concedes that 40 CFR Part 60, Subpart KKKK includes an output-based emission limit on NOx that applies to an entire power plant. Rather than taking the logical step of acknowledging that HRSGs assist and, in fact, are essential to achieving the Subpart KKKK emission limit, the Executive Director makes a seemingly illogical leap to the conclusion that Subpart KKKK cannot be the qualifying environmental regulation because that Subpart would not apply until "after an applicant affirmatively decides to build a combined cycle plant." Whatever that statement is intended to convey, it does not accurately reflect the regulatory framework.

The "Applicability" section of 40 CFR Part 60, Subpart KKKK states "if you are the owner or operator of a stationary combustion turbines with a heat input at peak load equal to or greater than 10.7 gigajoules (10MBtu) per hour, based on the higher heating value of the fuel, which commenced construction, modification, or reconstruction after February 18, 2005," your turbine is subject to this subpart."[56] So, it is clear that this regulation applies to "stationary combustion turbines" without reference to what type of equipment is installed in conjunction with those turbines.

Therefore, 40 CFR Part 60, Subpart KKKK clearly and unambiguously creates an output-based NOx emission limit that HRSGs are "used, constructed, acquired, or installed wholly or partly to meet or exceed." The bottom line is that an output-based emission limit exists and HRSGs help to meet or exceed those limits. To say that the equipment cannot be exempt, in whole or in part, because it is not specifically designated by regulation is a misreading of the statute

VI. Equal and Uniform Taxation

The Executive Director's and OPIC's Responses state that the TCEQ's prior HRSG exemption authorizations were in error; that the TCEQ is at liberty to correct its prior interpretation; and that any resulting difference in ad valorem tax impact is not in violation of the Texas Constitution's equal and uniform tax mandate. As a threshold matter, the argument requires that the prior interpretations were incorrect, which they were not. It is next necessary to walk through the myriad of cases cited in the Response Briefs to better understand what those cases stand for and what they do not and how they in no way support the Negative Use determinations in this case.

[56] 40 CFR §60.4305.

The Executive Director cites *1756, Inc. vs. Attorney General*[57] for the proposition that "Agencies may, indeed are expected to, alter and refine their interpretation of what fills such gaps [in statutes] through the exercise of their technical expertise . . ." *1756, Inc.* is based entirely on federal administrative law, not Texas, but more importantly, neither the case nor the quote supports the Executive Director's position in this case. *1756, Inc.* argued that an Immigration and Naturalization Service ("INS") Rule[58] was promulgated improperly. After a thorough analysis of legislative history supporting the INS's rule, and expressly finding that "The meaning of the [underlying federal] statute *remains ambiguous* after the 'traditional tools of statutory construction' have been applied," the *1756* Court upheld the agency's formally adopted rule.[59] The TCEQ has chosen not to comply with the Texas Administrative Procedures Act with respect to its new position on HRSGs. Legislative history does not support the agency's new position, and §11.31 is not ambiguous as applied to the facts of this case.

Moreover, *1756* requires that an agency bears "the burden of rationally explaining its departure from its previous interpretation", which the Executive Director has not even made an attempt to do in this case. Finally, while the Executive Director champions federal law seeming to allow inconsistent agency action, Texas law is to the contrary.

In *TGS–NOPEC Geophysical Company vs. Combs*, the Supreme Court invalidated the Comptroller's interpretation of the applicable statute, noting that her "own administrative interpretation of the sourcing statute further contradicts her argument here," "conflicts with her rule regarding the licensing of software," and was "inconsistent."[60] The court went on to say that "an agency's construction of a statute may be considered only if it is reasonable and not inconsistent with the statute."[61] The Executive Director's ruling in this case is neither.

The Executive Director cites *Flores vs. Employees Retirement System of Texas* for the proposition that "[a]n agency is not bound to follow its decisions in *contested cases* in the same way that a court is bound by precedent,"[62] provided that the agency gives a reasonable explanation for apparent inconsistency in agency interpretation. The *Flores* case involved allegations by a state employee that the Employee Retirement System of Texas (i) failed to follow its own prior decisions in denying her certain disability benefits and (ii) "applied a new policy in the course of her contested case hearing without providing notice before the hearing."[63] The Austin Court of Appeals agreed with Ms. Flores:

> "We hold that the Board acted arbitrarily and capriciously by: deciding this appeal before it arrived at its findings of fact and conclusions of law, reweighing adjudicative facts, changing findings of fact and conclusions of law for unauthorized and unexplained reasons, making findings of fact and conclusions of

[57] *1756, Inc. vs. Attorney General of the United States*, 745 F. Supp. 9 (D.Ct. D.C. 1990).

[58] 8 C.F.R. 214.(l)(1)(ii)(D).

[59] *1756 Inc.*, 745 F. Supp. at p. 15.

[60] *TGS–NOPEC Geophysical Company vs. Combs*, 340 S.W.3d 432, 443 (Tex. 2011).

[61] *Id.*

[62] *Flores vs. Employees Retirement System of Texas*, 74 S.W.3d 532, 544 (Tex. App.—Austin 2002) (emphasis added).

[63] *Flores vs. Employees Retirement System of Texas*, 74 S.W.3d 532 at 538.

law without adequate support in the record, and failing to give notice before the hearing of its intention not to follow previous decisions and failing to adequately explain the reasoning for its change in position."[64]

The *Flores* case fairly stands for the proposition that agencies may not internally arrive at a new policy during the course of a contested case and apply it to change the outcome of the case, which is what the Executive Director is attempting to do, without providing a reasonable explanation nor the inconsistency. The *Flores* case supports the Applicant's position.

The actions of the Executive Director in this case are the essence of arbitrary and capricious agency action and "arbitrary action of an administrative action cannot stand".[65] When those actions are compared to those of the agency in Flores, and the companion case of *Langford v. Employees Retirement System*, "serious due process concerns" are raised.[66]

The Executive Director also cites the Austin Court of Appeals decision in *First American Title vs. Strayhorn*[67] for the position that an agency may change its interpretation of a statutory tax scheme as long as the new interpretation does not contradict the statute or a formally promulgated rule. In *First American*, the Texas Comptroller formally promulgated a new version of its Rule 3.831 that impacted the way foreign insurers were required to remit the Texas retaliatory tax. The Austin Court Appeals expressly found that the new rule did not "impose any additional restrictions, conditions, or burdens that [were] inconsistent with the [applicable] statute.[68] The facts in *First American* are not consistent with this case. In the current case the Executive Director's proposed policy change has not been promulgated as a formal rule pursuant to the requirements of the Texas Administrative Procedures Act. In addition, the policy change is away from a position that is consistent with §11.31 of the Texas Tax Code to one that is inconsistent[69] with it. The *First American* case supports the Applicant's position given the facts in the current case.

The Executive Director cites *Grocers Supply Co. vs. Sharp*[70] for the proposition that an agency can change its interpretation of a statute because the prior interpretation had not been adopted in a formal rule. The *Grocers Supply* Court stated the issue in the case as follows:

"What is at issue in this case, then, is the Comptroller's substitution of one interpretation of his rule for another, not the Comptroller's contravention of one

---

[64] *Id.* at 545.

[65] *Lewis v. Metropolitan Savings and Loan Association*, 550 S.W.2d 11, 16 (Tex. 1977).

[66] *Langford v. Employees Retirement System*, 73 S.W.3d 560, 566 (Tex. App – Austin 2002, pet. denied).

[67] *First American Title vs. Strayhorn*, 169 S.W.3d 298 (Tex. App.—Austin 2005), *aff'd by First American Title Ins. Co. vs. Combs*, 258 S.W. 627 (Tex. 2008).

[68] *First American Title Ins. Co. vs. Strayhorn*, 169 S.W.3d at 310.

[69] Page 15 of the Executive Director's brief cites the following quote: "[Taxpayers] do not acquire a right to pay less in taxes . . . because a tax policy was incorrectly implemented" as stemming from a page "642," which would be from the Dissent in the Texas Supreme Court's *First American* decision. For clarification and future reference, the quote comes from the Austin Court of Appeals *First American* decision at page 313.

[70] *Grocers Supply Co. vs. Sharp*, 978 S.W.2d 638 (Tex. App.—Austin 1998, *pet. denied*).

> of his rules promulgated under the notice-and-comment procedures of the Administrative Procedures Act."[71]

The *Grocers Supply* Court found that the Texas Comptroller had (i) correctly enforced one refund policy from 1965 through sometime in 1984, (ii) incorrectly changed the refund policy to one inconsistent with Texas Supreme Court precedent from 1984 through 1993; and (iii) from 1992 to 1997 enforced the new policy without promulgating a new rule on the issue. On these facts the Court found that the Comptroller should be allowed to correct and enforce his policy interpretation.

The facts in *Grocers Supply* are not precedent for the current case. In this case the TCEQ had previously interpreted and enforced §11.31 according to its plain meaning. The Executive Director is now attempting to change that interpretation, inconsistent with the plain meaning of the statute and without complying with the Texas Administrative Procedures Act. *Grocers Supply* no longer has any precedential value on the point that an agency can change a policy interpretation of general applicability without promulgating a rule, because it is in direct opposition to the more recent opinion of *Combs vs. Entertainment Publications*,[72] which definitively holds that a change in a policy interpretation meeting the standards of a rule must to be promulgated under the Texas Administrative Procedures Act. Further, the conclusion of the *Grocers Supply* Court offers some insight into agency attempts to avoid established rulemaking procedures:

> "In resolving the claims of Grocers Supply in favor of the Comptroller, we should not be construed as endorsing or approving the manner in which the Comptroller has dealt with exemption requests such as that of Grocers Supply. The record before us does not reflect why the Comptroller from time to time varied his position, particularly in light of the supreme court's straightforward pronouncement of legislative intent. These actions do not foster the confidence and certainty in government upon which the people of this State are entitled to rely."[73]

None of the cases cited by the Executive Director or OPIC in their equal and uniform tax arguments involve property taxes. Instead, they deal with changes: (a) from an agency position found by a court to be inconsistent with a statute or binding Texas Supreme Court precedent (b) to an agency interpretation found by the court to be consistent with a statute or other binding precedent. The exact opposite pattern is in play here where there is a proposed agency change from a position consistent with a statutory directive to one patently inconsistent with it. If sustained, the divergent property tax impact violates equal and uniform taxation.

The Texas Constitution's equal and uniform tax[74] mandate requires that all persons falling within the same class be taxed alike.[75] We are fortunate to have a contemporaneous description of the

---

[71] *Id.* at 642.

[72] *Combs v. Entertainment Publications, Inc.*, 292 S.W.3d 712 (Tex. App.—Austin 2009, *no pet.*).

[73] *Grocers Supply*, 978 S.W.2d at 645.

[74] *See* TEX. CONST. art. I, § 3; U.S. CONST. amend. XIV, § 1.

[75] *Id.* (citing *Sharp v. Caterpillar, Inc.*, 932 S.W.2d 230, 240 (Tex. App.—Austin 1996, writ denied).

history and scope of the equal and uniform tax mandate as reported by the Texas Supreme Court.[76] In *In Re Nestle*, the Court reviewed statutory distinctions drawn between different taxpayers under the Texas franchise tax, and confirmed that the Texas legislature may make distinctions between taxpayers, but that such distinctions must be supported by more than mere rational classification.[77] And, while the Texas Legislature has broad authority to "pursue policy goals through tax legislation"[78] it must do so only with respect to "goals related to the taxation" and "must attempt to group similar things and differentiate dissimilar things."[79] The *Nestle* decision makes it clear that the equal and uniform tax mandate is more strict with respect to property taxes: "[t]the Legislature's authority to make classifications in levying occupation, use and sales taxes unquestionably is broader than its authority to do so with respect to ad valorem taxes."

If the Executive Director could sustain its incorrect new interpretation of §11.31, then it would violate the equal and uniform tax mandate as set forth in the *Nestle* decision, because there is no reasonable or even rational distinction between HRSGs the TCEQ has authorized 100% property tax exemptions for and the HRSGs the Executive Director now proposes to issue negative use determinations.

In *Calvert v. McLemore*, the Texas Supreme Court reasoned as follows:

> "The courts can only interfere . . . when it is made clearly to appear that an attempted classification has no reasonable basis in the nature of the businesses classified, and that the law operates unequally upon subjects between which there is no real difference to justify the separate treatment of them undertaken by the Legislature . . . . The statute is plainly a revenue measure. It does not relate in any way to the public safety, morals, convenience or general welfare . . . . [A]nyone who exhibits a motion picture or play at a place other than a fixed and regularly established motion picture theater must pay a tax. Another person who exhibits the same picture or play to a similar audience in an adjoining building of the same construction escapes payment of the tax merely because he regularly shows motion pictures in that building. The discrimination is too plain to admit of argument, and we agree with the trial court that [the law] is unconstitutional."[80]

Applying *McLemore's* analysis to this case, there is no reasonable or rational basis for the discrimination proposed. The Executive Director's position operates unequally upon subjects between which there is no real difference to justify separate treatment by the legislature. The distinction does not relate in any way to the public safety, morals, convenience or general welfare, and are void under the equal and uniform tax provisions of the Texas Constitution.

---

[76] *In Re Nestle USA, Inc.*, Cause No. 12-0518 (Tex. Oct. 19, 2012).

[77] *Id.* at 19.

[78] *Id.* at 20.

[79] *Id.*

[80] *Calvert v. McLemore*, 358 S.W.2d at 552 (Tex. 1962) (emphasis added).

VII. Steam Turbines Are Eligible to Receive a Positive Use Determination.

A. Appeal of the Steam Turbine Negative Use Determination is Timely

The steam turbine applications were included in the HRSG applications, primarily because the enhanced steam turbines are ancillary equipment to the HRSGs. When the Appraisal Districts appealed the Executive Director's use determination, the Appraisal Districts were focused on the positive use determinations for the HRSGs. However, the steam turbines and HRSGs were a part of the same application and only one use determination, 07-11926 was issued for these applications. This use determination was appealed, not just part of it, and was subsequently docketed as TCEQ Docket No. 2008-0851-MIS-U. At no point was the application or use determination somehow split into separate matters and were therefore, both subject to the same indefinite continuance and subsequent remand to the Executive Director. The Commission never issued a final order approving the negative use determination of the steam turbines or provided any sort of indication that this part of the application has somehow been separated from the HRSG portion of the application. The General Counsel's letter remanding the matter to the Executive Director no such distinction between the HRSG and steam turbine application and any inference of such is improper.

B. Steam Turbines Meet All of the Applicable Requirements of Pollution Control Property

To avoid repeating the arguments previously made regarding HRSGs, Applicant will briefly summarize how steam turbines meet the applicable requirements to be considered pollution control property. Steam turbines are specifically listed in §11.31(k) as equipment "for the control of air, water, or land pollution." As previously discussed, these items are not required to provide any information regarding their environmental benefit as the Legislature determined steam turbines are pollution control property and do provide an environmental benefit. Finally, steam turbines are used in order to meet or exceed the NOx emission limits in 40 CFR Subpart Da. Therefore, steam turbines qualify as pollution control property and the negative use determination issued by the Executive Director is improper.

VIII. Conclusion

The arguments made by the Executive Director and OPIC are based on misapplications of the controlling statute, policy concerns outside of the Agency's purview, and inadequate technical review. Texas Tax Code §11.31 provides a straightforward roadmap for how the TCEQ must process, evaluate, and resolve applications for use determinations. This process expressly contemplates that the pollution control aspects of "devices and methods" may also have productive value and instructs the TCEQ, not to dismiss applications with negative use determinations, but instead to acknowledge the legislatively-established pollution control benefits of items on the 11.31(k) list and then develop a full or partial positive use determination after factoring in the concurrent pollution control and production benefits of the equipment in question.

In the instant case, the Executive Director and the General Counsel did not follow the procedural requirements for processing these applications as laid out in §11.31 and failed to apply a

consistent approach for all similarly situated applications. Again, the question on appeal is not whether 100% or another specific percentage is appropriate - the Commissioners need only evaluate whether any percentage above zero is appropriate and, if so, a remand is required. As set forth fully above, the express language of the statute demands that a percentage above zero be recognized so the only legally valid outcome is for the Commission to put things back on the right track by remanding the applications to the Executive Director to determine what percentage of a positive use determination is appropriate. The Executive Director has the staff expertise and tools to do this job. All that we ask that they be instructed to do that job.

Respectfully submitted,

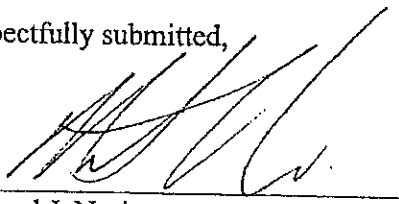

Michael J. Nasi
State Bar No. 00791335
Steve Moore
State Bar No. 14377320
Benjamin Rhem
State Bar No. 24065967

JACKSON WALKER L.L.P.
100 Congress Avenue, Suite 1100
Austin, Texas 78701
512-236-2200
512-236-2002 (Facsimile)
mnasi@jw.com

ATTORNEYS FOR
CER-COLORADO BEND ENERGY LLC

CERTIFICATE OF SERVICE

I hereby certify that on the 30th day of October, 2012, an original and 7 copies of the foregoing was filed with the TCEQ Office of the Chief Clerk and was served by electronic mail or U.S. First Class Mail to the attached mailing list.

Michael J. Nasi

MAILING LIST
CER-Colorado Bend Energy LLC
(formerly known as Navasota Wharton Energy Partners, LP)
TCEQ Docket No. 2008-0851-MIS-U

Daniel Long
Robert Martinez
Texas Environmental Law Division MC 173
P. O. Box 13087
Austin, Texas 78711-3087
512/239-0600 Fax 512/239-0606

Tylene Gamble
Chief Appraiser
Wharton County Appraisal District
308 E. Milam Street
Wharton, Texas 77488-4918
979/532-8932 Fax 979/532-5691
whartoncad@sbcglobal.net

Greg Maxim
Dennie Deegear
Duff & Phelps, LLC
919 Congress Avenue, Suite 1450
Austin, Texas 78701
512/671-5580 Fax 512/671-5501
gregory.maxim@duffandphelps.com
dennis.deegar@duffandphelps.com

Chance Goodin
TCEQ Office of Air, MC 206
P. O. Box 13087
Austin, Texas 78711-3087
512/239-6335 Fax 512/239-6188

Steve Hagle
TCEQ Office of Air, MC 122
P. O. Box 13087
Austin, Texas 78711-3087
512/239-2104 Fax 512/239-3341

Amy Swanholm
Blas Coy
TCEQ OPIC, MC 103
P. O. Box 13087
Austin, Texas 78711-3087
512/239-0600 Fax 512/239-0606

Docket Clerk
TCEQ Office of Chief Clerk, MC 105
P. O. Box 13087
Austin, Texas 78711-3087
512/239-3300 Fax 512/239-3311

Kyle Lucas
TCEQ Alternative Dispute
Resolution Program, MC 222
P. O. Box 13087
Austin, Texas 78711-3087
512/239-0687 Fax 512/239-4055

Attachment 1

TEXAS NATURAL RESOURCE CONSERVATION COMMISSION

A RESOLUTION concerning the delegation of certain duties and authority to the General Counsel.
Docket No. 2000-0327-RES

WHEREAS, the Texas Natural Resource Conservation Commission ("Commission") is an agency of the State of Texas;

WHEREAS, in accordance with applicable law, the Commission has appointed a General Counsel to serve as the Commission's chief legal officer;

WHEREAS, the Commission's General Counsel is empowered by statute to perform such duties as authorized by law or delegated by the Commission;

WHEREAS, the Commission does not intend by the issuance of this resolution to affect the duties and authority of the Executive Director;

WHEREAS, the Commission does not intend by the issuance of this resolution to repeal or change the duties and authority delegated to the General Counsel by Commission rule or other Commission resolution;

WHEREAS, the Commission strives to improve the efficiency, effectiveness, and timeliness of its rule review and rulemaking process;

WHEREAS, certain rule projects involve routine, non-controversial matters, such as quadrennial rule reviews and incorporation of federal and state requirements by reference;

WHEREAS, such rule projects may include public hearings or State Implementation Plan revisions; and

WHEREAS, the efficient and timely incorporation by reference of revisions of federal and state requirements into Commission rules may be necessary to avoid the imposition of inconsistent requirements;

NOW, THEREFORE, BE IT RESOLVED, that the Texas Natural Resource Conservation Commission delegates to its General Counsel:

1. The authority to approve publication in the Texas Register of the following:

   (a) proposed rules involving only incorporation by reference of federal or state requirements; and

(b) proposed notices of intention to review rules.

2. The authority to approve hearings on proposed rules described in Ordering Provision No. 1(a) and as appropriate, the publication of and hearing on, proposed revisions to the State Implementation Plan related to such rules.

3. The authority to delegate the authority set forth in this resolution to the attorneys in the Office of the General Counsel.

Issue Date: APR 07 2000

TEXAS NATURAL RESOURCE
CONSERVATION COMMISSION

Robert J. Huston, Chairman

Attachment 2

Application Review Summary

Application Number: 11926
Company: Navasota Wharton Energy Partners, LP
Facility: Colorado Bend Energy Center
County: Wharton
Tier: IV
Estimated Cost of Property: $41,300,000.00
Project Reviewer: Ronald Hatlett

Description of Property and Environmental Benefit

This facility has thermally efficient heat recovery steam generators (HRSGs) and steam turbines. Use of the equipment will improve the thermal efficiency of the plant.

Tier IV Partial Percentage: 100%. Calculation based on NOx avoidance.

Rule Citation(s)

40 CFR 60.Subpart DA: Standards of Performance for New Stationary Sources. Standards of performance for Electric Utility Steam Generating Units for Which Construction is Commenced after September 18, 1978. This rule does not require the installation of this equipment.

Final Determination

A positive use determination was issued on 5/1/2008, as 100% pollution control for the Heat Recovery Steam Generators and a negative determination was issued for the steam turbine. The use of the steam turbine does not provide an environmental benefit at the site and is not considered to be pollution control equipment. The determination was appealed on 5/19/2008. The application was remanded to the executive director for further review on 6/29/2012, on 7/10/2012, a negative determination was issued stating that heat recovery steam generators are used solely for production and, therefore, are not eligible for a positive use determination.

Administrative Review

Administrative Review Chronology

Received Date: 03/19/2008
Date Application Was Declared Administratively Complete: 04/08/2008

Fee Information

Application Fee Paid: Yes

Does Applicant Have Past Due Fees: No

Technical Review

Technical Review Chronology

Technical Review Start Date: 04/08/2008
Technical Review Completion Date: 04/30/2008
Determination Issued: 5/01/2008
Appeal Date: 5/16/2008
Remand Date: 6/29/2012
Technical Review Start Date: 7/02/2012
Technical Review Completion Date: 04/30/2008
Re-Determination Date: 7/09/2012

Ronald Hatlett 7/12/12
Project Reviewer Date

Work Leader 7/17/12
Work Leader Date

Attachment 3

UNITED STATES ENVIRONMENTAL PROTECTION AGENCY
WASHINGTON, D.C. 20460

AUG - 5 2004

OFFICE OF
AIR AND RADIATION

MEMORANDUM

SUBJECT: Guidance on SIP Credits for Emission Reductions from Electric-Sector Energy Efficiency and Renewable Energy Measures

FROM: Brian McLean, Director
Office of Atmospheric Programs

Steve Page, Director
Office of Air Quality Planning and Standards

TO: Regional Air Division Directors

Attached is a final document that provides guidance to States and local areas on quantifying and including emission reductions from energy efficiency and renewable energy measures in State Implementation Plans (SIPs). The guidance has been developed jointly by the Office of Air Quality Planning and Standards (OAQPS) and the Office of Atmospheric Programs (OAP).

Energy efficiency and renewable energy measures have many benefits. Energy efficiency measures reduce electricity consumption and renewable energy can supply energy from non- or less- polluting sources. These measures can save money, have other economic benefits, reduce dependence on foreign sources of fuel, increase the reliability of the electricity grid, enhance energy security, and, most importantly for air quality purposes, reduce air emissions from electric generating power plants. Energy efficiency and renewable energy inherently prevent pollution from occurring. Additionally, in many areas, the peak demand for electricity frequently coincides with periods of poor air quality. It is therefore desirable to encourage and reward greater application of energy efficiency and renewable energy measures and incorporate the emission reductions that these measures will accrue into the air quality planning process.

Please distribute this guidance to your state and local air pollution control agencies, interested members of the regulated community and the public. An electronic version of this final guidance can be found at http://www.epa.gov/ttn/oarpg under "Recent Additions." If your staff have any questions regarding this guidance please have them contact Art Diem of OAP at (202) 343-9340 or David Solomon of OAQPS at (919) 541-5375.

Attachment

Attachment 4

TAX EXEMPTION PROGRAM

Ohio Revised Code (ORC) Sections 5709.20 through 5709.27

5709.20 Definitions
5709.201 Continuing validity of certificates; transfer of pending applications.
5709.21 Certification procedure
5709.211 Opinion of EPA director or development director to be obtained prior to issuance of certificate.
5709.212. Application fee.
5709.22 Powers and duties of tax commissioner
5709.23 Notice to applicant and county auditor
5709.24 Appeal
5709.25 Exemption of pollution control facilities
5709.26 Liability in case of fraud
5709.27 Exemption certificate transfer

§ 5709.20 Definitions.

(A) "Air contaminant" means particulate matter, dust, fumes, gas, mist, smoke, vapor, or odorous substances, or any combination thereof.

(B) "Air pollution control facility" means any property designed, constructed, or installed for the primary purpose of eliminating or reducing the emission of, or ground level concentration of, air contaminants generated at an industrial or commercial plant or site that renders air harmful or inimical to the public health or to property within this state, or such property installed on or after November 1, 1993, at a petroleum refinery for the primary purpose of eliminating or reducing substances within fuel that otherwise would create the emission of air contaminants upon the combustion of fuel.

(C) "Energy conversion" means the conversion of fuel or power usage and consumption from natural gas to an alternate fuel or power source other than propane, butane, naphtha, or fuel oil; or the conversion of fuel or power usage and consumption from fuel oil to an alternate fuel or power source other than natural gas, propane, butane, or naphtha.

(D) "Energy conversion facility" means any additional property or equipment designed, constructed, or installed after December 31, 1974, for use at an industrial or commercial plant or site for the primary purpose of energy conversion.

(E) "Exempt facility" means any of the facilities defined in division (B), (D), (F), (I), (K) or (L) of this section for which an exempt facility certificate is issued pursuant to section 5709.21 or for which a certificate remains valid under section 5709.201 [5709.20.1] of the Revised Code.

(F) "Noise pollution control facility" means any property designed, constructed, or installed for use at an industrial or commercial plant or site for the primary purpose of eliminating or reducing, at that plant or site, the emission of sound which is harmful or inimical to persons or property, or materially reduces the quality of the environment, as shall be determined by the director of environmental protection within such standards for noise pollution control facilities and standards for environmental noise necessary to protect public health and welfare as may be promulgated by the United States environmental protection agency. In the absence of such United States environmental protection agency standards, the determination shall be made in accordance with generally accepted current standards of good engineering practice in environmental noise control.

(G) "Solid waste" means such unwanted residual solid or semi-solid material as results from industrial operations, including those of public utility companies, and commercial, distribution, research, agricultural, and community operations, including garbage, combustible or noncombustible, street dirt, and debris.

(H) "Solid waste energy conversion" means the conversion of solid waste into energy and the utilization of such energy for some useful purpose.

(I) "Solid waste energy conversion facility" means any property or equipment designed, constructed, or installed after December 31, 1974, for use at an industrial or a commercial plant or site for the primary purpose of solid waste energy conversion.

(J) "Thermal efficiency improvement" means the recovery and use of waste heat or waste steam produced incidental to electric power generation, industrial process heat generation, lighting, refrigeration, or space heating.

(K) "Thermal efficiency improvement facility" means any property or equipment designed, constructed, or installed after December 31, 1974, for use at an industrial or a commercial plant or site for the primary purpose of thermal efficiency improvement.

(L) "Industrial water pollution control facility" means any property designed, constructed, or installed for the primary purpose of collecting or conducting industrial waste to a point of disposal or treatment; reducing, controlling, or eliminating water pollution caused by industrial waste; or reducing, controlling, or eliminating the discharge into a disposal system of industrial waste or what would be industrial waste if discharged into the waters of this state. This division applies only to property related to an industrial water pollution control facility placed into operation or initially capable of operation after December 31, 1965, and installed pursuant to the approval of the environmental protection agency or any other governmental agency having authority to approve the installation of industrial water pollution control facilities. The definitions in section 6111.01 of the Revised Code, as applicable, apply to the terms used in this division.

(M) Property designed, constructed, installed, used, or placed in operation primarily for the safety, health, protection, or benefit, or any combination thereof, of personnel of a business, or primarily for a business's own benefit, is not an "exempt facility."

HISTORY: 130 v 1304 (Eff 10-14-63); 133 v S 169 (Eff 10-2-69); 135 v H 621 (Eff 11-22-73); 136 v S 498. Eff 1-17-77; 150 v H 95, § 1, eff. 6-26-03.

§ 5709.201. Continuing validity of certificates; transfer of pending applications.

(A) Except as provided in divisions (C)(4)(a) and (c) of section 5709.22 and division (F) of section 5709.25 of the Revised Code, a certificate issued under section 5709.21, 5709.31, 5709.46, or 6111.31 of the Revised Code that was valid and in effect on the effective date of this section shall continue in effect subject to the law as it existed before that effective date. Division (C)(4)(b) of section 5709.22 of the Revised Code does not apply to any certificate issued by the tax commissioner before July 1, 2003.

(B) Any applications pending on the effective date of this section for which a certificate had not been issued on or before that effective date under section 6111.31 of the Revised Code shall be transferred to the tax commissioner for further administering. Sections 5709.20 to 5709.27 of the Revised Code apply to such pending applications, excluding the requirement of section 5709.212 [5709.21.2] of the Revised Code that applicants must pay the fee.

(C) For applications pending on the effective date of this section, division (D) of section 5709.25 of the Revised Code allowing the commissioner to assess any additional tax notwithstanding any other time

limitations imposed by law on the denied portion of the applicant's claim applies only to tax periods that would otherwise be open to assessment on that effective date.

HISTORY: 150 v H 95, § 1, eff. 6-26-03.

Back to Top

§ 5709.21 Certification procedure.

(A) As used in this section:

(1) "Exclusive property" means real and personal property that is installed, used, and necessary for the operation of an exempt facility, and that is not auxiliary property unless the auxiliary property exempt cost equals or exceeds eighty-five per cent of the total cost of the property.

(2) "Auxiliary property" means personal property installed, used, and necessary for the operation of an exempt facility that is also used in other operations of the business other than an exempt facility purpose described in section 5709.20 of the Revised Code. "Auxiliary property" does not include property with an auxiliary property exempt cost that is less than or equal to fifteen per cent of the total cost of such property.

(3) "Auxiliary property exempt cost" means the cost of auxiliary property calculated as follows:

(a) If the auxiliary property is used for an exempt facility purpose for discrete periods of time, the exempt cost shall be determined by the ratio of time the auxiliary property is in use in such exempt capacity to the total time it is in use. Division (A)(3)(a) of this section does not apply if the property is concurrently used for an exempt facility purpose and a nonexempt facility purpose.

(b) The applicant has the burden of proving the exempt cost of all auxiliary property not described in division (A)(3)(a) of this section.

(c) Any cost related to an expansion of the commercial or industrial site that is not related to the operation of the exempt facility shall not be included as an auxiliary exempt cost under division (A)(3) of this section.

(B) Application for an exempt facility certificate shall be filed with the tax commissioner in such manner and in such form as prescribed by the tax commissioner . The application shall contain plans and specifications of the property, including all materials incorporated or to be incorporated therein and their associated costs, and a descriptive list of all equipment acquired or to be acquired by the applicant for the exempt facility and its associated cost. If the commissioner finds that the property was designed primarily as an exempt facility and is suitable and reasonably adequate for such purpose and is intended for such purpose, the commissioner shall enter a finding and issue a certificate to that effect. The effective date of the certificate shall be the date the application was made for such certificate or the date of the construction of the facility, whichever is earlier .

Nothing in this section shall be construed to extend the time period to file, to keep the time period to file open, or supersede the requirement of filing a tax refund or other tax reduction request in the manner and within the time prescribed by law.

(C) (1) Except as provided in division (C)(2) of this section, the certificate shall permit tax exemption pursuant to section 5709.25 of the Revised Code only for that portion of such exempt facility that is exclusive property used for a purpose enumerated in section 5709.20 of the Revised Code.

Attachment 5

AFFIDAVIT

STATE OF TEXAS §

COUNTY OF WHARTON §

BEFORE ME, the undersigned authority, on this day personally appeared Ronald J. Coldeway, known to me as that person, and after being duly sworn, stated under oath the following:

1. "My name is Ronald J. Coldeway. I am over twenty-one (21) years of age, am fully competent to testify and unless expressly stated otherwise, I have personal knowledge of all facts stated herein, and all such facts are to the best of my knowledge true and correct

2. I am the current Plant Manager at the Colorado Bend Energy Center (the "Facility"), a 550 MW combined cycle facility, utilizing four Heat Recovery Steam Generators ("HRSGs") in the production of electricity and located in Wharton County, Texas. I have been in this role at the Facility since September 7, 2010.

3. I have reviewed the Tier IV Use Determination Application #07-11926 (the "Application") (attached hereto as Exhibit "A") prepared and submitted to the TCEQ on March 19, 2008. In this Application, a method is outlined for recognizing air emissions (pollution reduction and/or prevention) reductions due to the Facility's combined cycle design. An Output Based Emissions Model (the "Model") in this Application attempted to recognize and to quantify the NOx emissions prevention due to the combustion efficiencies inherent in our Facility design.

4. To calculate the percentage of HRSG equipment deemed to be pollution control property ("PCP"), an "avoided emissions" approach was used in the Model. This approach relied upon thermal output differences between a conventional power generation system and the combined cycle system at the Facility. By calculating the displacement of emissions associated with the Facility's thermal output and subtracting these emissions from a baseline emissions rate, a percentage of the total Facility costs dedicated to PCP functions could be calculated. The displaced emissions were emissions that would have been generated by the same thermal output from a conventional steam power plant.

5. Finally, the Model multiplies the percentage generated above times the Total Capital Cost of the Facility to establish the "Capital Cost of NOx Avoidance". If this cost was equal to or greater than 100% of the cost of the HRSG, the HRSG was deemed to be 100% property tax exempt as PCP by the Model.

6. Based on my industry experience and knowledge of the Facility, the assumptions in the Output Based Emission Model, and the prevention of air emissions, as quantified, are in conformance with the expected capabilities and historical performance of the Facility.

7. In addition to the theoretical demonstration of pollution prevention due to combined cycle power generation efficiencies in the Model, I am aware of emissions data that has been monitored at the Barney Davis and Nueces Bay Power Plant both pre and post- repowering of that plant that confirm the assumptions in the above-referenced model regarding the air emissions reductions per pound of fossil fuel use. This data is set out and discussed in the attached Exhibit "B".

8. FURTHER AFFIANT SAYETH NOT."

Ronald J. Coldeway

BEFORE ME, the undersigned authority on this the 31st day of July, 2012, personally appeared Ronald J. Coldeway, who being duly sworn on this oath, deposed and said that he has read the foregoing and that every factual statement made therein is within her knowledge and is true and correct.

PATTY SHANNON
Notary Public State of Texas
My Comm. Exp. 08-28-2012

Notary Public in and for the State of Texas

EXHIBIT A

TEXAS COMMISSION ON ENVIRONMENTAL QUALITY
APPLICATION FOR USE DETERMINATION
FOR POLLUTION CONTROL PROPERTY

The TCEQ has the responsibility to determine whether a property is a pollution control property. A person seeking a use determination for pollution control property must complete the attached application or use a copy or similar reproduction. For assistance in completing this form refer to the TCEQ guidelines document, *Property Tax Exemptions for Pollution Control Property*, as well as 30 TAC §17, rules governing this program. For additional assistance please contact the Tax Relief for Pollution Control Property Program at (512) 239-3100. The application should be completed and mailed, along with a complete copy and appropriate fee, to: TCEQ MC-214, Cashiers Office, P.O. Box 13088, Austin, Texas 78711-3088.

1. GENERAL INFORMATION

A. What is the type of ownership of this facility?

- ☐ Corporation
- ☐ Partnership
- ☑ Limited Partnership
- ☐ Sole Proprietor
- ☐ Utility
- ☐ Other

B. Size of company: Number of Employees

- ☑ 1 to 99
- ☐ 100 to 499
- ☐ 500 to 999
- ☐ 1,000 to 1,999
- ☐ 2,000 to 4,999
- ☐ 5,000 or more

C. Business Description: **Electricity Manufacturing (SIC 4911)**

2. TYPE OF APPLICATION

- ☐ **Tier I $150 Application Fee**
- ☐ **Tier II $1,000 Application Fee**
- ☐ **Tier III $2,500 Application Fee**
- ☑ **Tier IV $500 Application Fee**

NOTE: Enclose a check, money order to the TCEQ, or a copy of the ePay receipt along with the applicaton to cover the required fee.

3. NAME OF APPLICANT

A. Company Name: Navasota Wharton Energy Partners LP

B. Mailing Address (Street or P.O. Box): 403 Corporate Woods

C. City, State, ZIP: Magnolia, TX 77354

4. PHYSICAL LOCATION OF PROPERTY REQUESTING A TAX EXEMPTION

A. Name of facility: Colorado Bend

B. Type of Mfg Process or Service: Electricity Manufacturing (SIC 4911)

C. Street Address: 3821 S. State Hwy 60

D. City, State, ZIP: Wharton, TX 77488

E. Tracking Number Assigned by Applicant: DPCOBend B

F. Customer Number or Regulated Entity Number: N/A

5. APPRAISAL DISTRICT WITH TAXING AUTHORITY OVER PROPERTY

A. Name of Appraisal District: Wharton

B. Appraisal District Account Number: 10258-000-000-00; 10-20500000-0200-67099; 20063-000-055-00

Replacement
~~07-12209~~

6. CONTACT NAME (must be provided)

A. Company/Organization Name:	Duff and Phelps LLC	
B. Name of Individual to Contact:	Greg Maxim	
C. Mailing Address:	919 Congress Ave.	Suite 1450
D. City, State, ZIP:	Austin, TX 78701	
E. Telephone number and fax number:	(512) 671-5580	Fax (512) 671-5501
F. E-Mail address (if available):	gregory.maxim@duffandphelps.com	

7. RELEVANT RULE, REGULATION, OR STATUTORY PROVISION

Please reference Section 8. Each item is detailed with the proper statute, regulation, or environmental regulatory provision.

8. DESCRIPTION OF PROPERTY

Background

The Colorado Bend Energy Center (the "Facility"), owned by Navasota Wharton Energy Partners LP, is a combined cycle natural-gas fired power plant located in Wharton, Wharton County, Texas. The Facility is intended to have a total capacity of 825 Mw, built in three phases. Phase has a capacity of 275 Mw and was completed in June of 2007. Phase 2, currently under construction, is to be completed in June of 2008 and will also have a 275 Mw capacity. Each phase consists of 2 GE 7-EA combustion turbine units utilizing the GE Dry Low NOx combustion control system technology, 2 heat recovery steam generating (HRSG) units, and one steam turbine unit. The Facility utilizes a cooling tower within the circulating water system for condenser cooling water needs and condensate return purposes.

Overview of Combined Cycle Technology

The Facility consists of a combined-cycle gas turbine power plant with gas Combustion Turbines ("CTs") equipped with heat recovery steam generators to capture heat from the gas turbine exhaust. Steam produced in the heat recovery steam generators powers a steam turbine generator(s) to produce additional electric power. Use of the otherwise wasted heat in the turbine exhaust gas results in higher plant thermal efficiency compared to other combustion technologies. Combined-cycle plants currently entering service can convert approximately 50% of the chemical energy of natural gas into electricity (HHV basis).

The Rankine cycle is a thermodynamic cycle that converts heat from an external source into work. In a Rankine cycle, external heat from an outside source is provided to a fluid in a closed-loop system. This fluid, once pressurized, converts the heat into work output using a turbine. The fluid most often used in a Rankine cycle is water (steam) due to its favorable properties, such as nontoxic and unreactive chemistry, abundance, and low cost, as well as its thermodynamic properties. The thermal efficiency of a Rankine cycle is usually limited by the working fluid. Without pressure reaching super critical the temperature range the

Rankine cycle can operate over is quite small, turbine entry temperatures are typically 565°C (the creep limit of stainless steel) and condenser temperatures are around 30°C. This gives a theoretical Carnot efficiency of around 63% compared with an actual efficiency of 42% for a modern coal-fired power station. This low turbine entry temperature (compared with a gas turbine) is why the Rankine cycle is often used as a bottoming cycle in combined cycle gas turbine power stations.

The Brayton cycle is a constant pressure thermodynamic cycle that converts heat from combustion into work. A Brayton engine, as it applies to a gas turbine system, will consist of a fuel or gas compressor, combustion chamber, and an expansion turbine. Air is drawn into the compressor, mixed with the fuel, and ignited. The resulting work output is captured through a pump, cylinder, or turbine. A Brayton engine forms half of a combined cycle system, which combines with a Rankine engine to further increase overall efficiency. Cogeneration systems typically make use of the waste heat from Brayton engines, typically for hot water production or space heating.

By combining both gas and steam cycles, high input temperatures and low output temperatures can be achieved. The efficiency of the cycles are additive, because they are powered by the same fuel source. A combined-cycle plant has a thermodynamic cycle that operates between the gas turbine's high firing temperature and the waste heat temperature from the condensers of the steam cycle. This large range means that the Carnot efficiency of the cycle is high. The actual efficiency, while lower than this is still higher than that of either plant on its own. The thermal efficiency of a combined-cycle power plant is the net power output of the plant divided by the heating value of the fuel. If the plant produces only electricity, efficiencies of up to 59% can be achieved.

A single-train combined-cycle plant consists of one gas turbine generator, a heat recovery steam generator (HSRG) and a steam turbine generator ("1 x 1" configuration). As an example, an "FA-class" combustion turbine, the most common technology in use for large combined-cycle plants within the state of Texas and other locations throughout the United States, represents a plant with approximately 270 megawatts of capacity.

See Figure 1 – Standard Combined-Cycle Configuration, below.

It is common to find combined-cycle plants using two or even three gas turbine generators and heat recovery steam generators feeding a single, proportionally larger steam turbine generator. Larger plant sizes result in economies of scale for construction and operation, and designs using multiple combustion turbines provide improved part-load efficiency. A 2 x 1 configuration using FA-class technology will produce about 540 megawatts of capacity at International Organization for Standardization ("ISO") conditions. ISO references ambient conditions at 14.7 psia, 59 F, and 60% relative humidity.

Because of high thermal efficiency, high reliability, and low air emissions,

combined-cycle gas turbines have been the new resource of choice for bulk power generation for well over a decade. Other attractive features include significant operational flexibility, the availability of relatively inexpensive power augmentation for peak period operation and relatively low carbon dioxide production.

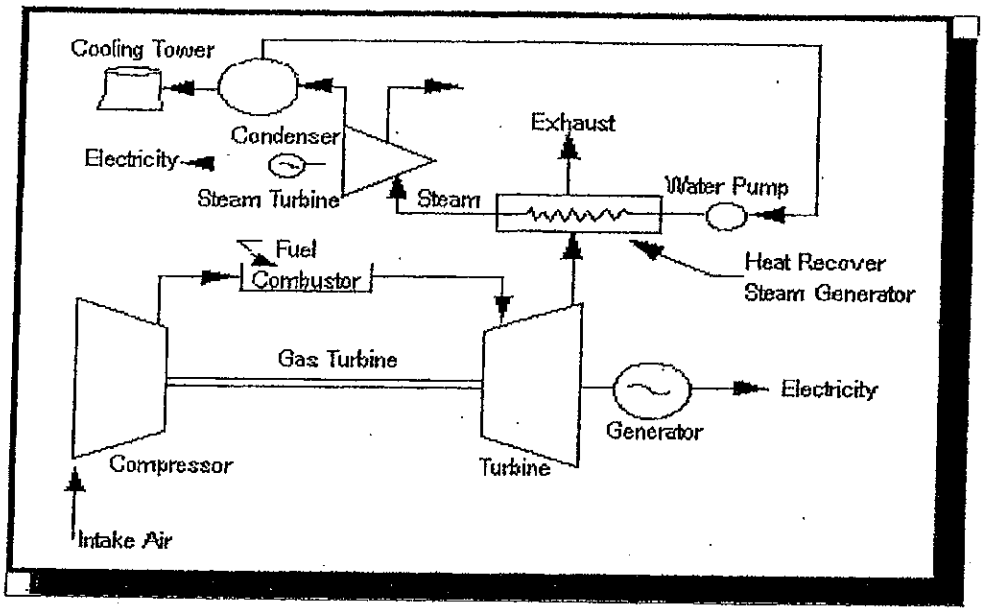

FIGURE 1 - Standard Combined-Cycle Configuration (1)

As an example, consider a gas turbine cycle that has an efficiency of 40%, which is a representative value for current Brayton Cycle gas turbines, and the Rankine Cycle has an efficiency of 30%. The combined-cycle efficiency would be 58%, which is a very large increase over either of the two simple cycles. Some representative efficiencies and power outputs for different cycles are shown in Figure 2 – Comparison of Efficiency and Power Output of Various Power Products, below.

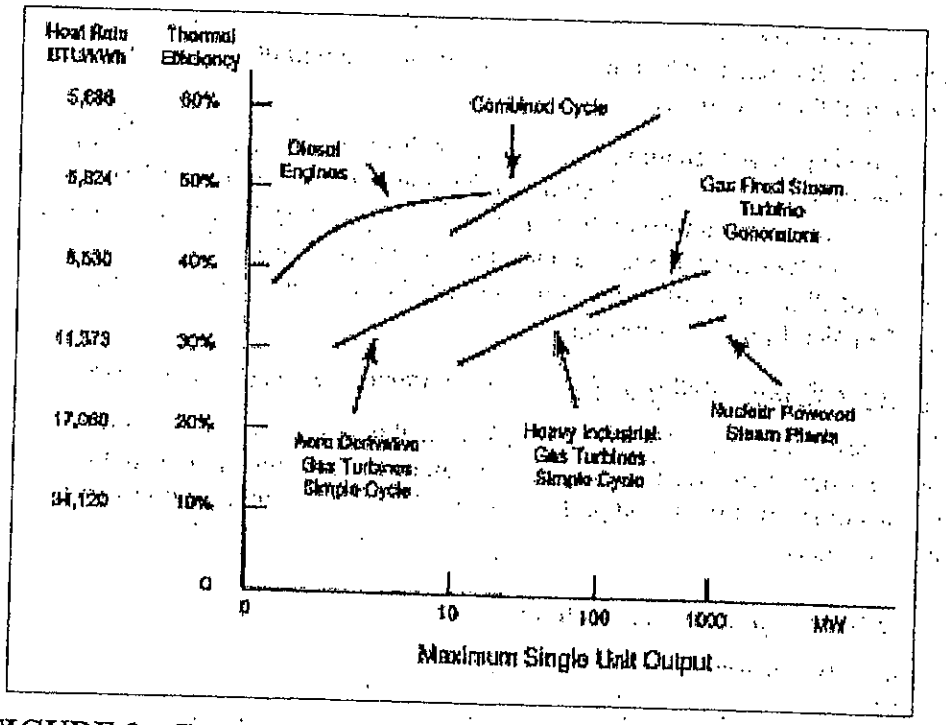

FIGURE 2 - Comparison of efficiency and power output of various power products [Bartol (1997)] (2)

Current Regulatory Authority for Output-Based Emissions

Innovative power technologies such as combined-cycle technology offer enormous potential to improve efficiency and enhance the environmental footprint of power generation through the reduction and/or prevention of air emissions to the environment. Currently, two thirds of the fuel burned to generate electricity in traditional fossil-fired steam boilers is lost. Traditional U.S. power generation facility efficiencies have not increased since the 1950s and more than one fifth of the U.S. power plants are more than 50 years old. In addition, these facilities are the leading contributors to U.S. emissions of carbon dioxide, NOx, sulfur dioxide ("SO2"), and other contaminants into the air and water.

The ability to recognize and regulate the efficiency benefits of pollution reduction and/or prevention through the use of combined-cycle technology is achieved through the use of Output-Based emissions standards, incorporated since September 1998 within the U.S. EPA's new source performance standards ("NSPS") for NOx, from both new utility boilers and new industrial boilers. Pursuant to section 407(c) of the Clean Air Act in subpart Da (Electric Utility Steam Generating Units) and subpart Db (Industrial-Commercial-Institutional Steam Generating Units) of 40 CFR part 60, the U.S. EPA revised the NOx emissions limits for steam generating units for which construction, modification, or reconstruction commenced after July 9, 1997 (3). Output-Based regulations are also exemplified by those used in the U.S. EPA's NOx Cap and Trade Program for the NOx State Implementation Plan ("SIP") Call

of 1998, which uses units of measure such as lb/MWh generated or lb concentration ("ppm"), which relate to the emissions to the productive output – electrical generation of the process.(4)

The use of innovative technologies such as combined-cycle units reduces fossil fuel use and leads to multi-media reductions in the environmental impacts of the production, processing transportation, and combustion of fossil fuels. In addition, reducing fossil fuel combustion is a pollution prevention measure that reduces emissions of all products of combustion, not just the target pollutant (currently NOx) of a federal regulatory program.

Authority to Expand Pollution Control Equipment & Categories in Texas

Under Texas House Bill 3732 ("HB3732") enacted in 2007, Section 11.31 of the Texas Tax Code is amended to add certain plant equipment and systems to the current list of air, water, or land pollution control devices exempt from property taxation in Texas.

Specifically, the language reads as follows:

SECTION 4. Section 11.31, Tax Code, is amended by adding Subsections (k), (l), and (m) to read as follows:
(k) The Texas Commission on Environmental Quality shall adopt rules establishing a nonexclusive list of facilities, devices, or methods for the control of air, water, or land pollution, which must include:
(1) coal cleaning or refining facilities;
(2) atmospheric or pressurized and bubbling or circulating fluidized bed combustion systems and gasification fluidized bed combustion combined-cycle systems;
(3) ultra-supercritical pulverized coal boilers;
(4) flue gas recirculation components;
(5) syngas purification systems and gas-cleanup units;
(6) enhanced heat recovery systems;
(7) exhaust heat recovery boilers;
(8) heat recovery steam generators;
(9) superheaters and evaporators;
(10) enhanced steam turbine systems;
(11) methanation;
(12) coal combustion or gasification byproduct and coproduct handling, storage, or treatment facilities;
(13) biomass cofiring storage, distribution, and firing systems;
(14) coal cleaning or drying processes, such as coal drying/moisture reduction, air jigging, precombustion decarbonization, and coal flow balancing technology;
(15) oxy-fuel combustion technology, amine or chilled ammonia scrubbing, fuel or emission conversion through the use of catalysts, enhanced scrubbing technology, modified combustion technology such as chemical looping, and cryogenic technology;
(16) if the United States Environmental Protection Agency adopts a final rule or regulation regulating carbon dioxide as a pollutant, property that is used, constructed, acquired, or installed wholly or partly to capture carbon dioxide from an anthropogenic source in this state that is geologically sequestered in this state;
(17) fuel cells generating electricity using hydrogen derived from coal, biomass, petroleum coke, or solid waste; and
(18) any other equipment designed to prevent, capture, abate, or monitor nitrogen oxides, volatile organic compounds, particulate matter, mercury, carbon monoxide, or any criteria pollutant.
(l) The Texas Commission on Environmental Quality by rule shall update the list adopted under Subsection (k) at least once every three years. An item may be removed from the list if the commission finds compelling evidence to support the conclusion that the item does not provide pollution control benefits.
(m) Notwithstanding the other provisions of this section, if the facility, device, or method for the

control of air, water, or land pollution described in an application for an exemption under this section is a facility, device, or method included on the list adopted under Subsection (k), the executive director of the Texas Commission on Environmental Quality, not later than the 30th day after the date of receipt of the information required by Subsections (c)(2) and (3) and without regard to whether the information required by Subsection (c)(1) has been submitted, shall determine that the facility, device, or method described in the application is used wholly or partly as a facility, device, or method for the control of air, water, or land pollution and shall take the actions that are required by Subsection (d) in the event such a determination is made.

Under the TCEQ's recently updated "Tax Relief for Pollution Control Property – Application Instructions and Equipment and Categories List – Effective January 2008", the Equipment and Categories List - Part B ("ECL Part B") is a list of the pollution control property categories adopted and set forth in TTC Sec. 26.045(f). The taxpayer is to supply a pollution control percentage for the equipment listed in Part B via calculations demonstrating pollution control, prevention and/or reductions achieved by the listed equipment or systems.

The following property descriptions outline the environmental purpose, including the anticipated environmental benefit of pollution control additions considered under the Application Instructions' ECL Part B that have been constructed and placed into use at the Facility as of its placed-in-service date, or installed subsequent to in-service since 1994:

Property Descriptions

Item #1 & 3 Combined-Cycle Gas Turbine Plant Heat Recovery Steam Generator ("HRSG") and Support Systems Tier IV B-8

40 CFR Part 60 Subparts DA and DB, NOx Limits for Electric Utility Steam Generating Units and Industrial-Commercial-Institutional Steam Generating Units for New Source Performance Standards ("NSPS").

TAC Rule 106.512, Standard Permit for Electric Generating Units (EGU)

NOTE: Permits issued under Texas Clean Air Act's Health & Safety Code Sections 382.011, applies to all electric generating units that emit air contaminants, regardless of size, and it is to reflect Best Available Control Technology ("BACT") for electric generating units on an output basis in pounds of NOx per megawatt hour, adjusted to reflect a simple cycle power plant.

The heat recovery steam generator ("HRSG") found in the Facility is a heat exchanger that recovers heat from a hot gas stream. It produces steam that can be used in a process or used to drive a steam turbine. A common application for an HRSG is in a combined-cycle power station, where hot exhaust from a gas turbine is fed to an HRSG to generate steam which in turn drives a steam turbine. This combination produces electricity in a more thermally efficient manner than either the gas turbine or steam turbine alone.

The Facility's HRSGs consist of three major components: the Evaporator, Superheater, and Economizer. The different components are put together to meet the operating requirements of the unit. Modular HRSGs normally consist of three sections: an LP (low pressure) section, a reheat/IP (intermediate pressure) section, and an HP (high pressure) section. The reheat and IP sections are separate circuits inside the HRSG. The IP steam partly feeds the reheat section. Each section has a steam drum and an evaporator section where water is converted to steam. This steam then passes through superheaters to raise the temperature and pressure past the saturation point.

Item #2 & 4 Steam Turbine and Support Systems Tier IV B-10

40 CFR Part 60 Subparts DA and DB, NOx Limits for Electric Utility Steam Generating Units and Industrial-Commercial-Institutional Steam Generating Units for New Source Performance Standards ("NSPS").

TAC Rule 106.512, Standard Permit for Electric Generating Units (EGU)

NOTE: Permits issued under Texas Clean Air Act's Health & Safety Code Sections 382.011, applies to all electric generating units that emit air contaminants, regardless of size, and it is to reflect Best Available Control Technology ("BACT") for electric generating units on an output basis in pounds of NOx per megawatt hour, adjusted to reflect a simple cycle power plant.

The steam turbine(s) found in the Facility operate on the Rankine cycle in combination with the Brayton cycle, as described above. Steam created in the Facility HRSG(s) from waste heat that would have otherwise been lost to the atmosphere enters the steam turbine via a throttle valve, where it powers the turbine

and connected generator to make electricity. Use of HRSG/Steam Turbine System combination provides the Facility with an overall efficiency of greater than 50%. Steam turbine systems similar to the Facility's have a history of achieving up to 95% availability on an annual basis and can operate for more than a year between shutdown for maintenance and inspections. (5)

Pollution Control Percentage Calculation: Avoided Emissions Approach

To calculate the percentage of the equipment or category deemed to be pollution control equipment, the Avoided Emissions approach has been used. This approach relies on thermal output differences between a conventional power generation system and the combined-cycle system at the Facility. Specifically, the percentage is determined by calculating the displacement of emissions associated with the Facility's thermal output and subtracting these emissions from a baseline emission rate. These displaced emissions are emissions that would have been generated by the same thermal output from a conventional system.

Greater energy efficiency reduces all air contaminant emissions, including the greenhouse gas, carbon dioxide. Higher efficiency processes include combined-cycle operation and combined heat and power ("CHP") generation. For electric generation the energy efficiency of the process expressed in terms of millions of British thermal units ("MMBTU's") per Megawatt-hour. Lower fuel consumption associated with increased fuel conversion efficiency reduces emissions across the board – that is NOx, SOx, particulate matter, hazardous air pollutants, and greenhouse gas emissions such as CO2.

In calculating the percent exempt for the listed items from the ECL-Part B, we utilized Output-Based NOx allocation method for both power generation projects that replaced existing facilities and "Greenfield" power and heat generation facilities. We looked at the various fossil fuel technologies in use today and chose the baseline facility to be a natural gas fuel-fired steam generator. We benchmarked this conventional generation to the subject natural gas-fired combined cycle generator at the Facility. By doing so, we narrowed the heat rate factors as much as possible to be conservative and uniform in modeling. The benchmark heat rate factor is the following:

Natural Gas fuel-fired Steam Generator: 10,490 BTU's/kWh

This baseline heat rate purposely omits other fossil fuel sources in order to eliminate impurity type characteristics, which in turn eliminated the NOx emission and cost of control differences of each fossil fuel and generator type. Comparing the emissions impact of different energy generation facilities is concise when emissions are measured per unit of useful energy output. For the purpose of our calculations, we converted all the energy output to units of MWh (1 MWh = 3.413 MMBTU), and compared the total emission rate to the baseline facility.

The comparison steps to calculate the NOx reduction is as follows:

Calculation (Reference Schedule A)

Step 1 – Subject Output-Based Limit Calculation (lbs NOx / MWh)

(Input-based Limit (lbs NOx/MMBTU)) X (Heat Rate (Btu/kWh)) / (1,000,000 Btu / 1,000 kWh) = Output: (lbs NOx/MWh),

Step 2 – Subject Output Conversion Calculation (NOx Tons / Year)

(Output (lbs NOx/MWh) X (Unit Design Capacity (MW)) X (Capacity Factor) X ((365 Days) X (24 hrs/day)) / 2,000 lbs = Output: (NOx Tons/Year)

Step 3 – Baseline Output-Based Limit Calculation (lbs NOx / MWh)

(Input-based Limit (lbs NOx/MWh)) X (Heat Rate (Btu/kWh)) / (1,000,000 Btu / 1,000 kWh) = Output: (lbs NOx/MWh)

Step 4 – Baseline Output Conversion Calculation (NOx Tons / Year)

(Output (lbs NOx/MMBtu) X (Unit Design Capacity (MW)) X (Capacity Factor) X ((365 Days) X (24 hrs/day)) / 2,000 lbs = Output: (NOx Tons/Year)

Step 5 – Percent NOx Reduction Calculation

$((\text{Output Baseline})_{\text{step 4}} - (\text{Output Subject})_{\text{step 2}}) / (\text{Output Subject})_{\text{step 2}} = \%$ Reduction Output Subject

Step 6 – Percent Exempt Calculation

(Total Subject Facility Cost) X (% NOx Reduction) = Capital Cost of NOx Avoidance

Step 7 – Percent Exempt Calculation

Total Cost of NOx Avoidance / Total Cost of HB 3732 Equipment = % Exempt

- If % Exempt is greater than 100% HB 3732 Equipment is 100% Exempt
- If % Exempt is less than 100% then HB 3732 Equipment is partially exempt at the Step 6 calculation.

NOTE: See the attached calculation sheet for the details regarding Facility-specific calculations and property tax exemption percentage results based upon these calculations.

REFERENCES

1. "Output-Based Regulations: A Handbook for Air Regulators", U.S. Environmental Protection Agency, Office of Atmospheric Programs – Climate Protection Partnerships Division, August, 2004, p.4.

2. "Output-Based Emissions Standards; Advancing Innovative Energy Technologies", Northeast-Midwest Institute; 2003, p. 9.

3. IBID, p.13.

4."Output-Based Regulations: A Handbook for Air Regulators", U.S. Environmental Protection Agency, Office of Atmospheric Programs – Climate Protection Partnerships Division, August, 2004, p.4.

5. http://www.cogeneration.net/Combined_Cycle_Power_Plants.htm

6. "Output-Based Emissions Standards; Advancing Innovative Energy Technologies", Northeast-Midwest Institute; 2003, p. 9.

9. PARTIAL PERCENTAGE CALCULATION

N/A.

10. PROPERTY CATEGORIES AND COSTS

See attached Schedule 10.

11. EMISSION REDUCTION INCENTIVE GRANT

Will an application for an Emission Reduction Incentive Grant be on file for this property/project:

[ ] Yes [X] No

12. APPLICATION DEFICIENCIES

After an initial review of the application, the TCEQ may determine that the information provided with the application is not sufficient to make a use determination. The TCEQ may send a notice of deficiency, requesting additional information that must be provided within 30 days of written notice.

13. FORMAL REQUEST FOR SIGNATURE

By signing this application, you certify that this information is true to the best of your knowledge and belief.

NAME: _____ DATE: 22 Apr. 2008

TITLE: Director

COMPANY: Duff and Phelps LLC

Under Texas Penal Code, Section 37.10, if you make a false statement on this application, you could receive a jail term of up to one year and a fine up to $2,000, or a prison term of two to 10 years and a fine of up to $5,000.

14. DELINQUENT FEE/PENALTY PROTOCOL

This form will not be processed until all delinquent fees and/or penalties owed to the TCEQ or the Office of the Attorney General on behalf of the TCEQ are paid in accordance with the Delinquent Fee and Penalty Protocol. (Effective 9/1/2006)

Navasota - Colorado Bend - Phase I
3821 S. State Hwy 60
TCEQ Use Determination Application - 2008
Scheule 10
Tier IV

10. PROPERTY CATEGORIES AND COST

PROPERTY	PROJECT ID. NO.	IN SERVICE DATE	TAXABLE ON OR BEFORE 1/1/94? (Y / N)	TIER IV DECISION FLOW CHART BOX	ECL NUMBER	ESTIMATED PURCHASE COST	% EXEMPT	EXEMPT COST
Heat Recovery Steam Generators (HRSG)	1	2007	N	3	B-8	$ 26,544,805	100%	$ 26,544,805
Steam Turbine System	2	2007	N	3	B-10	$ 10,091,206	100%	$ 10,091,206
					Tier IV Total	$ 36,636,012		$ 36,636,012

Navasota - Colorado Bend - Phase II
3821 S. State Hwy 60
TCEQ Use Determination Application - 2008
Scheule 10
Tier IV

10. PROPERTY CATEGORIES AND COST

PROPERTY	PROJECT ID. NO.	IN SERVICE DATE	TAXABLE ON OR BEFORE 1/1/94? (Y / N)	TIER IV DECISION FLOW CHART BOX	ECL NUMBER	ESTIMATED PURCHASE COST	% EXEMPT	EXEMPT COST
Heat Recovery Steam Generators (HRSG)	3	CWIP	N	3	B-6	$ 30,018,278	100%	$ 30,018,278
Steam Turbine System	4	CWIP	N	3	B-10	$ 22,386,336	100%	$ 22,386,336
					Tier IV Total	$ 52,404,614		$ 52,404,614

52 404 614
36 636 012
89 040 636

Navasota Wharton Energy Partners LP
Colorado Bend Energy Center - Phase I
Schedule A - 2008 Thermal Efficiency Calculation

Subject Details:	
Average Heat Rate [1]	7,746 (Btu/kWh)
NOx Emissions [2]	168.6 Tons / year
Plant Capacity [3]	275 MW
Capacity Factor [4]	100.00%
Technology [5]	Combined Cycle
Total Subject Facility Cost [6]	$169,296,979
Total Cost of Tier IV Equipment [7]	$36,636,012
Baseline Details:	
Average Heat Rate [8]	10,490 Btu/kWh
Technology [9]	Steam Turbine

STEP 1
Subject Output-Based Limit Calculation (lbs NOx / MWh)

Input-based Limit (lbs NOx/MMBtu)	x	Heat Rate (Btu/kWh)	/	Unit Conversions (1,000,000 Btu / 1000 kWh)	=	Output-based Limit (lbs NOx/MWh)
0.0198		7,746		1,000		0.1533

STEP 2
Subject Output Conversion Calculation (NOx Tons / Year)

Output-based Limit (lbs NOx/MWh)	x	Capacity (MW)	x	Capacity Factor	x	Unit Conversions (365 days * 24 Hours / 2,000 lbs)	=	Output NOx (Tons/Year)
0.1533		275		100.00%		4		168.6

STEP 3
Baseline Output-Based Limit Calculation (lbs NOx / MWh)

Input-based Limit (lbs NOx/MMBtu)	x	Heat Rate (Btu/kWh)	/	Unit Conversions (1,000,000 Btu / 1000 kWh)	=	Output-based Limit (lbs NOx/MWh)
0.0198		10,490		1,000		0.2077

STEP 4
Baseline Output Conversion Calculation (NOx Tons / Year)

Output-based Limit (lbs NOx/MWh)	x	Capacity (MW)	x	Capacity Factor	x	Unit Conversions (365 days * 24 Hours / 2,000 lbs)	=	Output NOx (Tons/Year)
0.2077		275		100.00%		4		228.5

STEP 5
Percent NOx Reduction Calculation

(Output Baseline	-	Output Subject)	/	Output Subject	=	% NOx Reduction
228.5		168.6		168.6		35.5%

STEP 6
Percent Exempt Calculation

Total Subject Unit Cost	X	% NOx Reduction	=	Capital Cost of NOx Avoidance
$169,296,979		35.5%		$60,100,428

STEP 7
Percent Exempt Calculation

Total Cost of NOx Avoidance	/	Total Cost of HB 3732 Equipment	=	% Exempt
$60,100,428		$36,636,012		164.0%

Conclude	100%

(1) - Heat rate represents plant performance test heat rate (HHV) and was provided by the client
(2) - NOx emissions is the NOx pollutant emission permit limit in tons per year provided by the client
(3) - Plant capacity is the average nominal capacity and was provided by the client
(4) - Capacity factor is the maximum operating level allowed under the emissions permit provided by the client
(5) - Technology represents the actual technology of the subject
(6) - Total subject facility cost represents the total cost to build the entire facility and it was determined based on data provided by the client
(7) - Total Tier IV equipment was determined by allocating the eligible TCEQ ECL part B equipment and their associated cost from actual data provide by the client
(8) - Baseline heat rate was published by the Energy Information Administration ("EIA")
(9) - Baseline technology represents the technology that the subject would have replaced at the time of the subjects construction

Navasota Wharton Energy Partners LP
Colorado Bend Energy Center - Phase II
Schedule A - 2008 Thermal Efficiency Calculation

Subject Details:

Average Heat Rate [1]	7,746 (Btu/kWh)
NOx Emissions [2]	168.6 Tons / year
Plant Capacity [3]	275 MW
Capacity Factor [4]	100.00%
Technology [5]	Combined Cycle
Total Subject Facility Cost [6]	$162,042,822
Total Cost of Tier IV Equipment [7]	$52,404,614

Baseline Details:

Average Heat Rate [8]	10,490 Btu/kWh
Technology [9]	Steam Turbine

STEP 1
Subject Output-Based Limit Calculation (lbs NOx / MWh)

Input-based Limit (lbs NOx/MMBtu)	x	Heat Rate (Btu/kWh)	/	Unit Conversions (1,000,000 Btu / 1000 kWh)	=	Output-based Limit (lbs NOx/MWh)
0.0198		7,746		1,000		0.1533

STEP 2
Subject Output Conversion Calculation (NOx Tons / Year)

Output-based Limit (lbs NOx/MWh)	x	Capacity (MW)	x	Capacity Factor	x	Unit Conversions (365 days * 24 Hours / 2,000 lbs)	=	Output NOx (Tons/Year)
0.1533		275		100.00%		4		168.6

STEP 3
Baseline Output-Based Limit Calculation (lbs NOx / MWh)

Input-based Limit (lbs NOx/MMBtu)	x	Heat Rate (Btu/kWh)	/	Unit Conversions (1,000,000 Btu / 1000 kWh)	=	Output-based Limit (lbs NOx/MWh)
0.0198		10,490		1,000		0.2077

STEP 4
Baseline Output Conversion Calculation (NOx Tons / Year)

Output-based Limit (lbs NOx/MWh)	x	Capacity (MW)	x	Capacity Factor	x	Unit Conversions (365 days * 24 Hours / 2,000 lbs)	=	Output NOx (Tons/Year)
0.2077		275		100.00%		4		228.5

STEP 5
Percent NOx Reduction Calculation

(Output Baseline	-	Output Subject)	/	Output Subject	=	% NOx Reduction
228.5		168.6		168.6		35.5%

STEP 6
Percent Exempt Calculation

Total Subject Unit Cost	X	% NOx Reduction	=	Capital Cost of NOx Avoidance
$162,042,822		35.5%		$57,525,202

STEP 7
Percent Exempt Calculation

Total Cost of NOx Avoidance	/	Total Cost of HB 3732 Equipment	=	% Exempt
$57,525,202		$52,404,614		109.8%

Conclude	100%

(1) - Heat rate represents the anticipated heat rate (HHV) and was provided by the client
(2) - NOx emissions is the NOx pollutant emission permit limit in tons per year provided by the client
(3) - Plant capacity is the average nominal capacity and was provided by the client
(4) - Capacity factor is the maximum operating level allowed under the emissions permit provided by the client
(5) - Technology represents the actual technology of the subject
(6) - Total subject facility cost represents the total cost to build the entire facility and it was determined based on data provide by the client
(7) - Total Tier IV equipment was determined by allocating the eligible TCEQ ECL part B equipment and their associated cost from actual data provide by the client
(8) - Baseline heat rate was published by the Energy Information Administration ("EIA")
(9) - Baseline technology represents the technology that the subject would have replaced at the time of the subjects construction

EXHIBIT B

AFFIDAVIT

STATE OF TEXAS §

COUNTY OF NUECES §

BEFORE ME, the undersigned authority, on this day personally appeared Mark Shepherd, known to me as that person, and after being duly sworn, stated under oath the following:

1. "My name is Mark Shepherd. I am over twenty-one (21) years of age, am fully competent to testify and unless expressly stated otherwise, I have personal knowledge of all facts stated herein, and all such facts are to the best of my knowledge true and correct.

2. I am the current Director of Environmental, Safety and Health at the Barney Davis Power Plant (the "Facility"), a 680 MW combined cycle facility, utilizing (2) Heat Recovery Steam Generators ("HRSGs") in the production of electricity and located in Nueces County, Texas. I have been in this role at the Facility since 2010.

2. I am also the current Director of Environmental, Safety and Health at the Nueces Bay Power Plant (the "Facility"), a 680 MW combined cycle facility, utilizing six Heat Recovery Steam Generators ("HRSGs") in the production of electricity and located in Nueces County, Texas. I have been in this role at the Facility since 2010.

3. I have reviewed the Tier IV Use Determination Applications 07-12210 and 07-12211 (the "Applications"), prepared and submitted to the TCEQ on March 27, 2008. In these Applications, a method of recognizing air emissions (pollution reduction and/or prevention) reductions due to the Facility's combined cycle design is outlined. An Output Based Emissions Model (the "Model") in these Applications attempted to recognize and to quantify the NOx emissions prevention due to the combustion efficiencies inherent in our Facility design.

4. To calculate the percentage of HRSG equipment deemed to be pollution control property ("PCP"), an "avoided emissions" approach was used in the Model. This approach relied upon thermal output differences between a conventional power generation system and the combined cycle system at the Facility. By calculating the displacement of emissions associated with the Facility's thermal output and subtracting these emissions from a baseline emissions rate,

a percentage of the total Facility costs dedicated to PCP functions could be calculated. The displaced emissions were emissions that would have been generated by the same thermal output from a conventional steam power plant. (See Attachments 1 and 2 – Applications 07-12210 and 07-12211)

5. Finally, the Model multiplies the percentage generated above times the Total Capital Cost of the Facility to establish the "Capital Cost of NOx Avoidance". If this cost was equal to or greater than 100% of the cost of the HRSG, the HRSG was deemed to be 100% property tax exempt as PCP by the Model. (See Attachments 1 and Attachment 2 – Application 07-12210 and 07-12211)

6. In general, the assumptions in the Output Based Emission Model, and the prevention of air emissions, as quantified, are in conformance with the expected capabilities and historical performance of the Facility.

7. In addition to the theoretical demonstration of pollution prevention due to combined cycle power generation efficiencies in the Model, we have specific empirical Facility emissions outputs pre- and post- repowering efforts that support the air emissions reductions per pound of fossil fuel use. These emissions reductions are attached as Attachment 3.

8. FURTHER AFFIANT SAYETH NOT."

Mark Shepherd

BEFORE ME, the undersigned authority on this the 26th day of October, 2012, personally appeared Mark Shepherd, who being duly sworn on this oath, deposed and said that he has read the foregoing and that every factual statement made therein is within her knowledge and is true and correct.

BEVERLY PETTY
MY COMMISSION EXPIRES
March 14, 2013

Notary Public in and for the State of Texas

Attachment 1

PDF 07 12 21C

TEXAS COMMISSION ON ENVIRONMENTAL QUALITY
APPLICATION FOR USE DETERMINATION
FOR POLLUTION CONTROL PROPERTY

The TCEQ has the responsibility to determine whether a property is a pollution control property. A person seeking a use determination for pollution control property must complete the attached application or use a copy or similar reproduction. For assistance in completing this form refer to the TCEQ guidelines document, *Property Tax Exemptions for Pollution Control Property*, as well as 30 TAC §17, rules governing this program. For additional assistance please contact the Tax Relief for Pollution Control Property Program at (512) 239-3100. The application should be completed and mailed, along with a complete copy and appropriate fee, to: TCEQ MC-214, Cashiers Office, P.O. Box 13088, Austin, Texas 78711-3088.

1. GENERAL INFORMATION

A. What is the type of ownership of this facility?

- ☐ Corporation
- ☐ Sole Proprietor
- ☑ Partnership
- ☐ Utility
- ☐ Limited Partnership
- ☐ Other

B. Size of company: Number of Employees

- ☑ 1 to 99
- ☐ 100 to 499
- ☐ 500 to 999
- ☐ 1,000 to 1,999
- ☐ 2,000 to 4,999
- ☐ 5,000 or more

C. Business Description: **Electricity Manufacturing (SIC 4911)**

2. TYPE OF APPLICATION

- ☐ **Tier I $150 Application Fee**
- ☐ **Tier II $1,000 Application Fee**
- ☐ **Tier III $2,500 Application Fee**
- ☑ **Tier IV $500 Application Fee**

NOTE: Enclose a check, money order to the TCEQ, or a copy of the ePay receipt along with the applicaton to cover the required fee.

3. NAME OF APPLICANT

A. Company Name: Topaz Power Group LLC

B. Mailing Address (Street or P.O. Box): 2705 Bee Caves Road Suite 340

C. City, State, ZIP: Austin, TX 78746

4. PHYSICAL LOCATION OF PROPERTY REQUESTING A TAX EXEMPTION

A. Name of facility: Barney Davis

B. Type of Mfg Process or Service: Electricity Manufacturing (SIC 4911)

C. Street Address: 4301 Waldron Rd

D. City, State, ZIP: Corpus Christi, TX 78418

E. Tracking Number Assigned by Applicant: DPBarneyDavis B

F. Customer Number or Regulated Entity Number: N/A

5. APPRAISAL DISTRICT WITH TAXING AUTHORITY OVER PROPERTY

A. Name of Appraisal District: Nueces

B. Appraisal District Account Number: TBD/New for 2008

07.12210

6. CONTACT NAME (must be provided)

A. Company/Organization Name:	Duff and Phelps LLC	
B. Name of Individual to Contact:	Greg Maxim	
C. Mailing Address:	919 Congress Ave.	Suite 1450
D. City, State, ZIP:	Austin, TX 78701	
E. Telephone number and fax number:	(512) 671-5580	Fax (512) 671-5501
F. E-Mail address (if available):	gregory.maxim@duffandphelps.com	

7. RELEVANT RULE, REGULATION, OR STATUTORY PROVISION

Please reference Section 8. Each item is detailed with the proper statute, regulation, or environmental regulatory provision.

8. DESCRIPTION OF PROPERTY

Background

The Barney Davis Power Station is located in Nueces County, Texas on the south side of the City of Corpus Christi. The plant has approximately 1,992 acres of land between the Laguna Madre and Oso Creek. Barney Davis contains two intermediate natural gas-fired steam-generating units that were placed in-service in 1974 (Unit 1 - 335 MW) and 1976 (Unit 2 - 347 MW), respectively. The units, which were designed for base load operation, are presently being shuttered in place. As part of the Barney Davis repowering initiative, Topaz will be adding two new GE 7FA combustion turbines and two Heat Recovery Steam Generators (HRSG). With the additional re-tooling of the existing steam turbine, a total of 680 MW generating capacity will go online in 2009.

Overview of Combined Cycle Technology

The Facility is a combined-cycle gas turbine power plant consisting of gas Combustion Turbines ("CTs") equipped with heat recovery steam generators to capture heat from the gas turbine exhaust. Steam produced in the heat recovery steam generators powers a steam turbine generator(s) to produce additional electric power. The use of otherwise wasted heat in the turbine exhaust gas results in higher plant thermal efficiency compared to other power generation technologies. Combined-cycle plants currently entering service can convert over 50% of the chemical energy of natural gas into electricity (HHV basis). Employment of the Brayton Thermodynamic Cycle (Gas Turbine Cycle) in combination with the Rankine Thermodynamic Cycle results in the improved efficiency.

The Rankine cycle is a thermodynamic cycle that converts heat from an external source into work. In a Rankine cycle, external heat from an outside source is provided to a fluid in a closed-loop system. This fluid, once pressurized, converts the heat into work output using a turbine. The fluid most often used in a Rankine cycle is water (steam) due to its favorable properties, such as nontoxic and unreactive chemistry, abundance, and low cost, as well as its thermodynamic properties. The thermal efficiency of a Rankine cycle is usually limited by the working fluid. Without pressure reaching super critical the temperature range the

Rankine cycle can operate over is quite small, turbine entry temperatures are typically 565°C (the creep limit of stainless steel) and condenser temperatures are around 30°C. This gives a theoretical Carnot efficiency of around 63% compared with an actual efficiency of 42% for a modern coal-fired power station. This low turbine entry temperature (compared with a gas turbine) is why the Rankine cycle is often used as a bottoming cycle in combined cycle gas turbine power stations.

The Brayton cycle is a constant pressure thermodynamic cycle that converts heat from combustion into work. A Brayton engine, as it applies to a gas turbine system, will consist of a fuel or gas compressor, combustion chamber, and an expansion turbine. Air is drawn into the compressor, mixed with the fuel, and ignited. The resulting work output is captured through a pump, cylinder, or turbine. A Brayton engine forms half of a combined cycle system, which combines with a Rankine engine to further increase overall efficiency. Cogeneration systems typically make use of the waste heat from Brayton engines, typically for hot water production or space heating.

By combining both gas and steam cycles, high input temperatures and low output temperatures can be achieved. The efficiency of the cycles are additive, because they are powered by the same fuel source. A combined-cycle plant has a thermodynamic cycle that operates between the gas turbine's high firing temperature and the waste heat temperature from the condensers of the steam cycle. This large range means that the Carnot efficiency of the cycle is high. The actual efficiency, while lower than this is still higher than that of either plant on its own. The thermal efficiency of a combined-cycle power plant is the net power output of the plant divided by the heating value of the fuel. If the plant produces only electricity, efficiencies of up to 59% can be achieved.

A single-train combined-cycle plant consists of one gas turbine generator, a heat recovery steam generator (HSRG) and a steam turbine generator ("1 x 1" configuration). As an example, an "FA-class" combustion turbine, the most common technology in use for large combined-cycle plants within the state of Texas and other locations throughout the United States, represents a plant with approximately 270 megawatts of capacity.

See Figure 1 – Standard Combined-Cycle Configuration, below.

It is common to find combined-cycle plants using two or even three gas turbine generators and heat recovery steam generators feeding a single, proportionally larger steam turbine generator. Larger plant sizes result in economies of scale for construction and operation, and designs using multiple combustion turbines provide improved part-load efficiency. A 2 x 1 configuration using FA-class technology will produce about 540 megawatts of capacity at International Organization for Standardization ("ISO") conditions. ISO references ambient conditions at 14.7 psia, 59 F, and 60% relative humidity.

Because of high thermal efficiency, high reliability, and low air emissions,

combined-cycle gas turbines have been the new resource of choice for bulk power generation for well over a decade. Other attractive features include significant operational flexibility, the availability of relatively inexpensive power augmentation for peak period operation and relatively low carbon dioxide production.

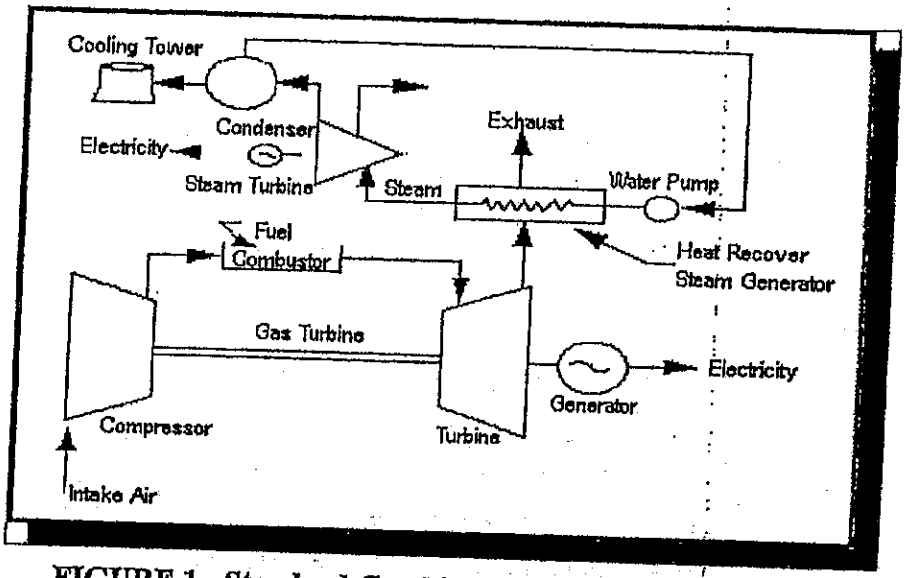

FIGURE 1 - Standard Combined-Cycle Configuration (1)

As an example, consider a gas turbine cycle that has an efficiency of 40%, which is a representative value for current Brayton Cycle gas turbines, and the Rankine Cycle has an efficiency of 30%. The combined-cycle efficiency would be 58%, which is a very large increase over either of the two simple cycles. Some representative efficiencies and power outputs for different cycles are shown in Figure 2 – Comparison of Efficiency and Power Output of Various Power Products, below.

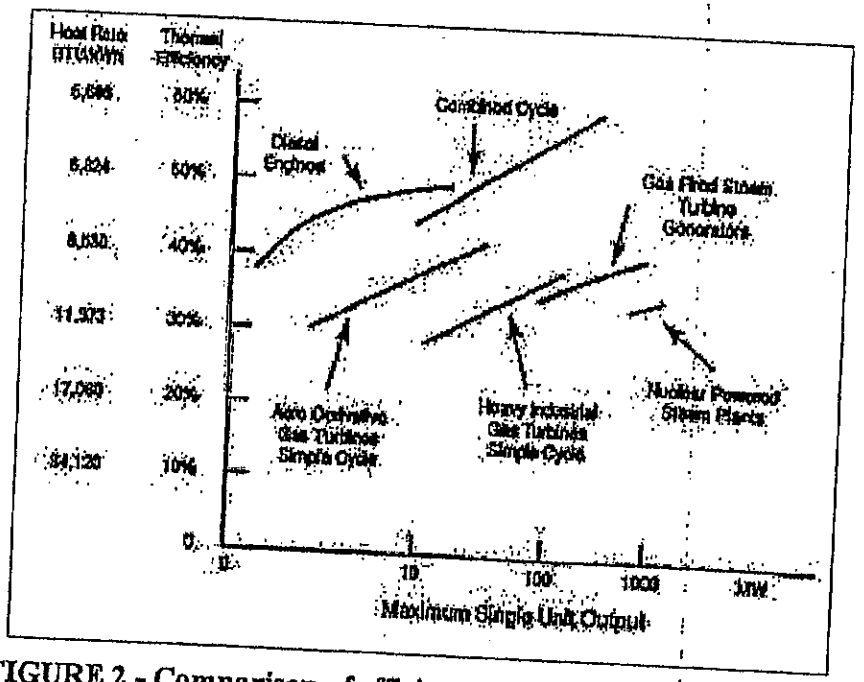

FIGURE 2 - Comparison of efficiency and power output of various power products [Bartol (1997)] (2)

Current Regulatory Authority for Output-Based Emissions

Innovative power technologies such as combined-cycle technology offer enormous potential to improve efficiency and enhance the environmental footprint of power generation through the reduction and/or prevention of air emissions to the environment. Currently, two thirds of the fuel burned to generate electricity in traditional fossil-fired steam boilers is lost. Traditional U.S. power generation facility efficiencies have not increased since the 1950s and more than one fifth of the U.S. power plants are more than 50 years old. In addition, these facilities are the leading contributors to U.S. emissions of carbon dioxide, NOx, sulfur dioxide ("SO2"), and other contaminants into the air and water.

The ability to recognize and regulate the efficiency benefits of pollution reduction and/or prevention through the use of combined-cycle technology is achieved through the use of Output-Based emissions standards, incorporated since September 1998 within the U.S. EPA's new source performance standards ("NSPS") for NOx, from both new utility boilers and new industrial boilers. Pursuant to section 407(c) of the Clean Air Act in subpart Da (Electric Utility Steam Generating Units) and subpart Db (Industrial-Commercial-Institutional Steam Generating Units) of 40 CFR part 60, the U.S. EPA revised the NOx emissions limits for steam generating units for which construction, modification, or reconstruction commenced after July 9, 1997 (3). Output-Based regulations are also exemplified by those used in the U.S. EPA's NOx Cap and Trade Program for the NOx State Implementation Plan

("SIP") Call of 1998, which uses units of measure such as lb/MWh generated or lb concentration ("ppm"), which relate to the emissions to the productive output – electrical generation of the process.(4)

The use of innovative technologies such as combined-cycle units reduces fossil fuel use and leads to multi-media reductions in the environmental impacts of the production, processing transportation, and combustion of fossil fuels. In addition, reducing fossil fuel combustion is a pollution prevention measure that reduces emissions of all products of combustion, not just the target pollutant (currently NOx) of a federal regulatory program.

Authority to Expand Pollution Control Equipment & Categories in Texas

Under Texas House Bill 3732 ("HB3732") enacted in 2007, Section 11.31 of the Texas Tax Code is amended to add certain plant equipment and systems to the current list of air, water, or land pollution control devices exempt from property taxation in Texas.

Specifically, the language reads as follows:

SECTION 4. Section 11.31, Tax Code, is amended by adding Subsections (k), (l), and (m) to read as follows:
(k) The Texas Commission on Environmental Quality shall adopt rules establishing a nonexclusive list of facilities, devices, or methods for the control of air, water, or land pollution, which must include:
(1) coal cleaning or refining facilities;
(2) atmospheric or pressurized and bubbling or circulating fluidized bed combustion systems and gasification fluidized bed combustion combined-cycle systems;
(3) ultra-supercritical pulverized coal boilers;
(4) flue gas recirculation components;
(5) syngas purification systems and gas-cleanup units;
(6) enhanced heat recovery systems;
(7) exhaust heat recovery boilers;
(8) heat recovery steam generators;
(9) superheaters and evaporators;
(10) enhanced steam turbine systems;
(11) methanation;
(12) coal combustion or gasification byproduct and coproduct handling, storage, or treatment facilities;
(13) biomass cofiring storage, distribution, and firing systems;
(14) coal cleaning or drying processes, such as coal drying/moisture reduction, air jigging, precombustion decarbonization, and coal flow balancing technology;
(15) oxy-fuel combustion technology, amine or chilled ammonia scrubbing, fuel or emission conversion through the use of catalysts, enhanced scrubbing technology, modified combustion technology such as chemical looping, and cryogenic technology;
(16) if the United States Environmental Protection Agency adopts a final rule or regulation regulating carbon dioxide as a pollutant, property that is used, constructed, acquired, or installed wholly or partly to capture carbon dioxide from an anthropogenic source in this state that is geologically sequestered in this state;
(17) fuel cells generating electricity using hydrogen derived from coal, biomass, petroleum coke, or solid waste; and
(18) any other equipment designed to prevent, capture, abate, or monitor nitrogen oxides, volatile organic compounds, particulate matter, mercury, carbon monoxide, or any criteria pollutant.
(l) The Texas Commission on Environmental Quality by rule shall update the list adopted under Subsection (k) at least once every three years. An item may be removed from the list if the commission finds compelling evidence to support the conclusion that the item does not provide pollution control benefits.
(m) Notwithstanding the other provisions of this section, if the facility, device, or method for the

control of air, water, or land pollution described in an application for an exemption under this section is a facility, device, or method included on the list adopted under Subsection (k), the executive director of the Texas Commission on Environmental Quality, not later than the 30th day after the date of receipt of the information required by Subsections (c)(2) and (3) and without regard to whether the information required by Subsection (c)(1) has been submitted, shall determine that the facility, device, or method described in the application is used wholly or partly as a facility, device, or method for the control of air, water, or land pollution and shall take the actions that are required by Subsection (d) in the event such a determination is made.

Under the TCEQ's recently updated "Tax Relief for Pollution Control Property – Application Instructions and Equipment and Categories List – Effective January 2008", the Equipment and Categories List - Part B ("ECL Part B") is a list of the pollution control property categories adopted and set forth in TTC Sec. 26.045(f). The taxpayer is to supply a pollution control percentage for the equipment listed in Part B via calculations demonstrating pollution control, prevention and/or reductions achieved by the listed equipment or systems.

The following property descriptions outline the environmental purpose, including the anticipated environmental benefit of pollution control additions considered under the Application Instructions' ECL Part B that have been constructed and placed into use at the Facility as of its placed-in-service date, or installed subsequent to in-service since 1994:

Property Descriptions

Item #1 Combined-Cycle Gas Turbine Plant Heat Recovery Steam Generator ("HRSG") and Support Systems Tier IV B-8

40 CFR Part 60 Subpart KKKK - Standards of Performance for Stationary Combustion Turbines

TAC Rule 116.110 Control of Air Pollution by Permits for New Construction or Modification - New Source Review Permits

NOTE: Permits issued under Texas Clean Air Act's Health & Safety Code Sections 382.011, applies to all electric generating units that emit air contaminants, regardless of size, and it is to reflect Best Available Control Technology ("BACT") for electric generating units on an output basis in pounds of NOx per megawatt hour, adjusted to reflect a simple cycle power plant.

The heat recovery steam generator ("HRSG") found in the Facility is a heat exchanger that recovers heat from a hot gas stream. It produces steam that can be used in a process or used to drive a steam turbine. A common application for an HRSG is in a combined-cycle power station, where hot exhaust from a gas turbine is fed to an HRSG to generate steam which in turn drives a steam turbine. This combination produces electricity in a more thermally efficient manner than either the gas turbine or steam turbine alone.

The Facility's HRSGs consist of three major components: the Evaporator, Superheater, and Economizer. The different components are put together to meet the operating requirements of the unit. Modular HRSGs normally consist of three sections: an LP (low pressure) section, a reheat/IP (intermediate pressure) section, and an HP (high pressure) section. The reheat and IP sections are separate circuits inside the HRSG. The IP steam partly feeds the reheat section. Each section has a steam drum and an evaporator section where water is converted to steam. This steam then passes through superheaters to raise the temperature and pressure past the saturation point.

Item #2 Steam Turbine and Support Systems Tier IV B-10

40 CFR Part 60 Subpart KKKK - Standards of Performance for Stationary Combustion Turbines

TAC Rule 116.110 Control of Air Pollution by Permits for New Construction or Modification - New Source Review Permits

NOTE: Permits issued under Texas Clean Air Act's Health & Safety Code Sections 382.011, applies to all electric generating units that emit air contaminants, regardless of size, and it is to reflect Best Available Control Technology ("BACT") for electric generating units on an output basis in pounds of NOx per megawatt hour, adjusted to reflect a simple cycle power plant.

The steam turbine(s) found in the Facility operate on the Rankine cycle in combination with the Brayton cycle, as described above. Steam created in the Facility HRSG(s) from waste heat that would have otherwise been lost to the atmosphere enters the steam turbine via a throttle valve, where it powers the turbine

and connected generator to make electricity. Use of HRSG/Steam Turbine System combination provides the Facility with an overall efficiency of greater than 50%. Steam turbine systems similar to the Facility's have a history of achieving up to 95% availability on an annual basis and can operate for more than a year between shutdown for maintenance and inspections. (5)

Pollution Control Percentage Calculation: Avoided Emissions Approach

To calculate the percentage of the equipment or category deemed to be pollution control equipment, the Avoided Emissions approach has been used. This approach relies on thermal output differences between a conventional power generation system and the combined-cycle system at the Facility. Specifically, the percentage is determined by calculating the displacement of emissions associated with the Facility's thermal output and subtracting these emissions from a baseline emission rate. These displaced emissions are emissions that would have been generated by the same thermal output from a conventional system.

Greater energy efficiency reduces all air contaminant emissions, including the greenhouse gas, carbon dioxide. Higher efficiency processes include combined-cycle operation and combined heat and power ("CHP") generation. For electric generation the energy efficiency of the process expressed in terms of millions of British thermal units ("MMBTU's") per Megawatt-hour. Lower fuel consumption associated with increased fuel conversion efficiency reduces emissions across the board – that is NOx, SOx, particulate matter, hazardous air pollutants, and greenhouse gas emissions such as CO2.

In calculating the percent exempt for the listed items from the ECL-Part B, we utilized Output-Based NOx allocation method for both power generation projects that replaced existing facilities and "Greenfield" power and heat generation facilities. We looked at the various fossil fuel technologies in use today and chose the baseline facility to be a natural gas fuel-fired steam generator. We benchmarked this conventional generation to the subject natural gas-fired combined cycle generator at the Facility. By doing so, we narrowed the heat rate factors as much as possible to be conservative and uniform in modeling. The benchmark heat rate factor is the following:

Natural Gas fuel-fired Steam Generator: 10,490 BTU's/kWh

This baseline heat rate purposely omits other fossil fuel sources in order to eliminate impurity type characteristics, which in turn eliminated the NOx emission and cost of control differences of each fossil fuel and generator type. Comparing the emissions impact of different energy generation facilities is concise when emissions are measured per unit of useful energy output. For the purpose of our calculations, we converted all the energy output to units of MWh (1 MWh = 3.413 MMBTU), and compared the total emission rate to the baseline facility.

The comparison steps to calculate the NOx reduction is as follows:

Calculation (Reference Schedule A)

Step 1 – Subject Output-Based Limit Calculation (lbs NOx / MWh)

(Input-based Limit (lbs NOx/MMBTU)) X (Heat Rate (Btu/kWh)) / (1,000,000 Btu / 1,000 kWh) = Output: (lbs NOx/MWh),

Step 2 – Subject Output Conversion Calculation (NOx Tons / Year)

(Output (lbs NOx/MWh) X (Unit Design Capacity (MW)) X (Capacity Factor) X ((365 Days) X (24 hrs/day)) / 2,000 lbs = Output: (NOx Tons/Year)

Step 3 – Baseline Output-Based Limit Calculation (lbs NOx / MWh)

(Input-based Limit (lbs NOx/MWh)) X (Heat Rate (Btu/kWh)) / (1,000,000 Btu / 1,000 kWh) = Output: (lbs NOx/MWh)

Step 4 – Baseline Output Conversion Calculation (NOx Tons / Year)

(Output (lbs NOx/MMBtu) X (Unit Design Capacity (MW)) X (Capacity Factor) X ((365 Days) X (24 hrs/day)) / 2,000 lbs = Output: (NOx Tons/Year)

Step 5 – Percent NOx Reduction Calculation

$((\text{Output Baseline})_{\text{step 4}} - (\text{Output Subject})_{\text{step 2}}) / (\text{Output Subject})_{\text{step 2}} = \%$ Reduction Output Subject

Step 6 – Percent Exempt Calculation

(Total Subject Facility Cost) X (% NOx Reduction) = Capital Cost of NOx Avoidance

Step 7 – Percent Exempt Calculation

Total Cost of NOx Avoidance / Total Cost of HB 3732 Equipment = % Exempt

- If % Exempt is greater than 100% HB 3732 Equipment is 100% Exempt
- If % Exempt is less than 100% then HB 3732 Equipment is partially exempt at the Step 6 calculation.

NOTE: See the attached calculation sheet for the details regarding Facility-specific calculations and property tax exemption percentage results based upon these calculations.

REFERENCES

1. "Output-Based Regulations: A Handbook for Air Regulators", U.S. Environmental Protection Agency, Office of Atmospheric Programs – Climate Protection Partnerships Division, August, 2004, p.4.

2. "Output-Based Emissions Standards; Advancing Innovative Energy Technologies", Northeast-Midwest Institute; 2003, p. 9.

3. IBID, p.13.

4."Output-Based Regulations: A Handbook for Air Regulators", U.S. Environmental Protection Agency, Office of Atmospheric Programs – Climate Protection Partnerships Division, August, 2004, p.4.

5. http://www.cogeneration.net/Combined_Cycle_Power_Plants.htm

6. "Output-Based Emissions Standards; Advancing Innovative Energy Technologies", Northeast-Midwest Institute; 2003, p. 9.

9. PARTIAL PERCENTAGE CALCULATION

N/A.

10. PROPERTY CATEGORIES AND COSTS

See attached Schedule 10.

11. EMISSION REDUCTION INCENTIVE GRANT

Will an application for an Emission Reduction Incentive Grant be on file for this property/project:

[ ] Yes [X] No

12. APPLICATION DEFICIENCIES

After an initial review of the application, the TCEQ may determine that the information provided with the application is not sufficient to make a use determination. The TCEQ may send a notice of deficiency, requesting additional information that must be provided within 30 days of written notice.

13. FORMAL REQUEST FOR SIGNATURE

By signing this application, you certify that this information is true to the best of your knowledge and belief.

NAME: _____ DATE: 22 April 2008

TITLE: Director

COMPANY: Duff and Phelps LLC

Under Texas Penal Code, Section 37.10, if you make a false statement on this application, you could receive a jail term of up to one year and a fine up to $2,000, or a prison term of two to 10 years and a fine of up to $5,000.

14. DELINQUENT FEE/PENALTY PROTOCOL

This form will not be processed until all delinquent fees and/or penalties owed to the TCEQ or the Office of the Attorney General on behalf of the TCEQ are paid in accordance with the Delinquent Fee and Penalty Protocol. (Effective 9/1/2006)

Topaz Power Group LLC
Battery Davis
Schedule A - 2008 Thermal Efficiency Calculation

Subject Details:	
Average Heat Rate [1]	8,000 (Btu/kWh)
NOx Emissions [2]	403.0 Tons / year
Plant Capacity [3]	630 MW
Capacity Factor [4]	100.00%
Technology [5]	Combined Cycle
Total Subject Facility Cost [6]	$416,025,975
Total Cost of Tier IV Equipment [7]	$120,879,828
Baseline Details:	
Average Heat Rate [8]	10,490 Btu/kWh
Technology [9]	Steam Turbine

STEP 1
Subject Output-Based Limit Calculation (lbs NOx / MWh)

Input-based Limit (lbs NOx/MMBtu)	x	Heat Rate (Btu/kWh)	/	Unit Conversions (1,000,000 Btu / 1000 kWh)	=	Output-based Limit (lbs NOx/MWh)
0.0183		8,000		1,000		0.1462

STEP 2
Subject Output Conversion Calculation (NOx Tons / Year)

Output-based Limit (lbs NOx/MWh)	x	Capacity (MW)	x	Capacity Factor	x	Unit Conversions (365 days * 24 Hours / 2,000 lbs)	=	Output NOx (Tons/Year)
0.1462		630		100.00%		4		403.0

STEP 3
Baseline Output-Based Limit Calculation (lbs NOx / MWh)

Input-based Limit (lbs NOx/MMBtu)	x	Heat Rate (Btu/kWh)	/	Unit Conversions (1,000,000 Btu / 1000 kWh)	=	Output-based Limit (lbs NOx/MWh)
0.0185		10,490		1,000		0.1941

STEP 4
Baseline Output Conversion Calculation (NOx Tons / Year)

Output-based Limit (lbs NOx/MWh)	x	Capacity (MW)	x	Capacity Factor	x	Unit Conversions (365 days * 24 Hours / 2,000 lbs)	=	Output NOx (Tons/Year)
0.1941		630		100.00%		4		528.0

STEP 5
Percent NOx Reduction Calculation

(Output Baseline	-	Output Subject)	/	Output Subject	=	% NOx Reduction
528.0		403.0		403.0		31.0%

STEP 6
Percent Exempt Calculation

Total Subject Unit Cost	X	% NOx Reduction	=	Capital Cost of NOx Avoidance
$416,025,975		31.0%		$128,968,052

STEP 7
Percent Exempt Calculation

Total Cost of NOx Avoidance	/	Total Cost of HB 3732 Equipment	=	% Exempt
$128,968,052		$120,879,828		106.7%

Conclude	100%

(1) - Heat rate represents the anticipated heat rate (HHV) and was provided by the client
(2) - NOx emissions is the NOx pollutant emission permit limit in tons per year provided by the client
(3) - Plant capacity is the average nominal capacity and was provided by the client
(4) - Capacity factor is the maximum operating level allowed under the emissions permit provided by the client
(5) - Technology represents the actual technology of the subject
(6) - Total subject facility cost represents the total cost to build the entire facility and it was determined based on data provide by the client
(7) - Total Tier IV equipment was determined by allocating the eligible TCEQ ECL part B equipment and their associated cost from actual data provide by the client
(8) - Baseline heat rate was published by the Energy Information Administration ("EIA")
(9) - Baseline technology represents the technology that the subject would have replaced at the time of the subjects construction

Topaz Power Group LLC
Barney Davis Power Project
TCEQ Use Determination Application - 2007
Scheule 10
Tier IV

10. PROPERTY CATEGORIES AND COST

PROPERTY	PROJECT ID. NO.	IN SERVICE DATE	TAXABLE ON OR BEFORE 1/1/94? (Y / N)	TIER IV DECISION FLOW CHART BOX 3	ECL NUMBER	ESTIMATED PURCHASE COST	% EXEMPT	EXEMPT COST
Heat Recovery Steam Generators (HRSG)	1	CWIP	N	3	B-8	$76,551,046	100%	$76,551,046
Steam Turbine Systems	2	CWIP	N	3	B-10	$44,328,783	100%	$44,328,783
					Tier IV Total	$120,879,829		$120,879,829

Attachment 2

POF 07-12211

TEXAS COMMISSION ON ENVIRONMENTAL QUALITY
APPLICATION FOR USE DETERMINATION
FOR POLLUTION CONTROL PROPERTY

The TCEQ has the responsibility to determine whether a property is a pollution control property. A person seeking a use determination for pollution control property must complete the attached application or use a copy or similar reproduction. For assistance in completing this form refer to the TCEQ guidelines document, *Property Tax Exemptions for Pollution Control Property*, as well as 30 TAC §17, rules governing this program. For additional assistance please contact the Tax Relief for Pollution Control Property Program at (512) 239-3100. The application should be completed and mailed, along with a complete copy and appropriate fee, to: TCEQ MC-214, Cashiers Office, P.O. Box 13088, Austin, Texas 78711-3088.

1. GENERAL INFORMATION

A. What is the type of ownership of this facility?

- ☐ Corporation
- ☐ Sole Proprietor
- ☑ Partnership
- ☐ Utility
- ☐ Limited Partnership
- ☐ Other

B. Size of company: Number of Employees

- ☑ 1 to 99
- ☐ 1,000 to 1,999
- ☐ 100 to 499
- ☐ 2,000 to 4,999
- ☐ 500 to 999
- ☐ 5,000 or more

C. Business Description: **Electricity Manufacturing (SIC 4911)**

2. TYPE OF APPLICATION

- ☐ **Tier I $150 Application Fee**
- ☐ **Tier II $1,000 Application Fee**
- ☐ **Tier III $2,500 Application Fee**
- ☑ **Tier IV $500 Application Fee**

NOTE: Enclose a check, money order to the TCEQ, or a copy of the ePay receipt along with the applicaton to cover the required fee.

3. NAME OF APPLICANT

A. Company Name: Topaz Power Group LLC

B. Mailing Address (Street or P.O. Box): 2705 Bee Caves Road Suite 340

C. City, State, ZIP: Austin, TX 78746

4. PHYSICAL LOCATION OF PROPERTY REQUESTING A TAX EXEMPTION

A. Name of facility: Nueces Bay

B. Type of Mfg Process or Service: Electricity Manufacturing (SIC 4911)

C. Street Address: 2002 Navigation Blvd

D. City, State, ZIP: Corpus Christi, TX 78402

E. Tracking Number Assigned by Applicant: DPNuecesBay B

F. Customer Number or Regulated Entity Number: N/A

5. APPRAISAL DISTRICT WITH TAXING AUTHORITY OVER PROPERTY

A. Name of Appraisal District: Nueces

B. Appraisal District Account Number: TBD/New for 2008

07-12211

6. CONTACT NAME (must be provided)

A. Company/Organization Name:	Duff and Phelps LLC	
B. Name of Individual to Contact:	Greg Maxim	
C. Mailing Address:	919 Congress Ave.	Suite 1450
D. City, State, ZIP:	Austin, TX 78701	
E. Telephone number and fax number:	(512) 671-5580	Fax (512) 671-5501
F. E-Mail address (if available):	gregory.maxim@duffandphelps.com	

7. RELEVANT RULE, REGULATION, OR STATUTORY PROVISION

Please reference Section 8. Each item is detailed with the proper statute, regulation, or environmental regulatory provision.

8. DESCRIPTION OF PROPERTY

Background

The Nueces Bay Power Station is located in Nueces County, Texas near the City of Corpus Chrisit. The site currently has three generating units which are presently mothballed. As part of the Nueces Bay repowering project, the existing turbines will be removed to make room for the two new GE 7FA gas turbines. Heat Recovery Steam Generators (HRSG) are being added to provide steam to the steam turbine. The existing steam turbine is currently undergoing refurbishment and will be used to drive a new GE steam turbine generator resulting in a total combined generating capacity of 680 MW for all the generating units at the Nueces Bay Power Station. The facility is expected to be completed by 2009.

Overview of Combined Cycle Technology

The Facility is a combined-cycle gas turbine power plant consisting of gas Combustion Turbines ("CTs") equipped with heat recovery steam generators to capture heat from the gas turbine exhaust. Steam produced in the heat recovery steam generators powers a steam turbine generator(s) to produce additional electric power. The use of otherwise wasted heat in the turbine exhaust gas results in higher plant thermal efficiency compared to other power generation technologies. Combined-cycle plants currently entering service can convert over 50% of the chemical energy of natural gas into electricity (HHV basis). Employment of the Brayton Thermodynamic Cycle (Gas Turbine Cycle) in combination with the Rankine Thermodynamic Cycle results in the improved efficiency.

The Rankine cycle is a thermodynamic cycle that converts heat from an external source into work. In a Rankine cycle, external heat from an outside source is provided to a fluid in a closed-loop system. This fluid, once pressurized, converts the heat into work output using a turbine. The fluid most often used in a Rankine cycle is water (steam) due to its favorable properties, such as nontoxic and unreactive chemistry, abundance, and low cost, as well as its thermodynamic properties. The thermal efficiency of a Rankine cycle is usually limited by the working fluid. Without pressure reaching super critical the temperature range the Rankine cycle can operate over is quite small, turbine entry temperatures are

typically 565°C (the creep limit of stainless steel) and condenser temperatures are around 30°C. Traditional coal fired and natural gas fired Rankine cycle power generation plants are limited by the inlet pressures and temperatures of the steam turbine design and the condenser vacuum and temperature. The Rankine cycle can achieve thermodynamic cycle efficiency (useful work obtained as a percentage of fuel input) ranging from 33% to 36%. However, if the Rankine cycle is used in conjunction with or as the "bottoming" cycle to the Brayton cycle the efficiencies can be improved as discussed below. This low turbine entry temperature (compared with a gas turbine) is why the Rankine cycle is often used as a bottoming cycle in combined cycle gas turbine power stations.

The Brayton cycle is a constant pressure thermodynamic cycle that converts heat from combustion into work. A Brayton engine, as it applies to a gas turbine system, will consist of a fuel or gas compressor, combustion chamber, and an expansion turbine. Air is drawn into the compressor, mixed with the fuel, and ignited. The resulting work output is captured through a pump, cylinder, or turbine. A Brayton engine forms half of a combined cycle system, which combines with a Rankine engine to further increase overall efficiency. Cogeneration systems typically make use of the waste heat from Brayton engines, typically for hot water production or space heating.

By combining both gas and steam cycles, high input temperatures and low output temperatures can be achieved. The efficiency of the cycles are additive, because they are powered by the same fuel source. A combined-cycle plant has a thermodynamic cycle that operates between the gas turbine's high firing temperature and the waste heat temperature from the condensers of the steam cycle. This large range means that the Carnot efficiency of the cycle is high. The actual efficiency, while lower than this is still higher than that of either plant on its own. The thermal efficiency of a combined-cycle power plant is the net power output of the plant divided by the heating value of the fuel. If the plant produces only electricity, efficiencies of up to 59% can be achieved.

A single-train combined-cycle plant consists of one gas turbine generator, a heat recovery steam generator (HSRG) and a steam turbine generator ("1 x 1" configuration). As an example, an "FA-class" combustion turbine, the most common technology in use for large combined-cycle plants within the state of Texas and other locations throughout the United States, represents a plant with approximately 270 megawatts of capacity.

See Figure 1 – Standard Combined-Cycle Configuration, below.

It is common to find combined-cycle plants using two or even three gas turbine generators and heat recovery steam generators feeding a single, proportionally larger steam turbine generator. Larger plant sizes result in economies of scale for construction and operation, and designs using multiple combustion turbines provide improved part-load efficiency. A 2 x 1 configuration using FA-class technology will produce about 540 megawatts of capacity at International Organization for

Standardization ("ISO") conditions. ISO references ambient conditions at 14.7 psia, 59 F, and 60% relative humidity.

Because of high thermal efficiency, high reliability, and low air emissions, combined-cycle gas turbines have been the new resource of choice for bulk power generation for well over a decade. Other attractive features include significant operational flexibility, the availability of relatively inexpensive power augmentation for peak period operation and relatively low carbon dioxide production.

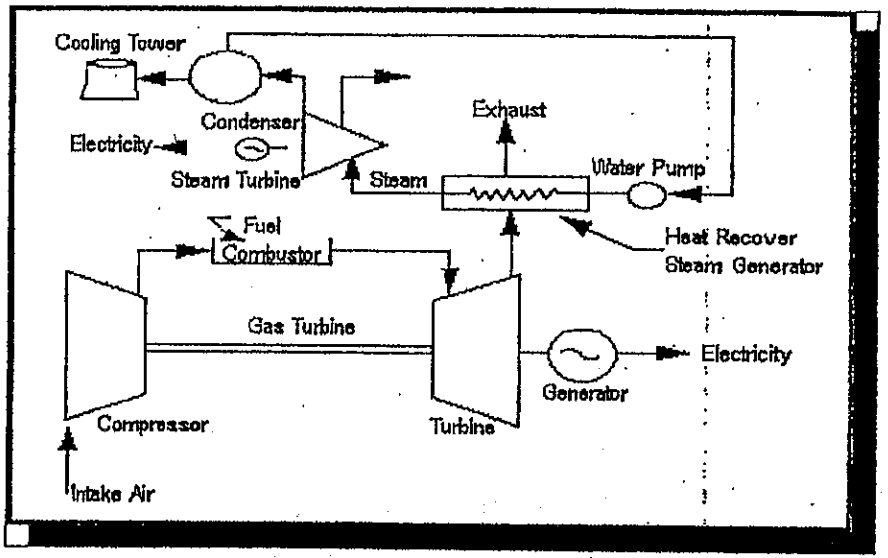

FIGURE 1 - Standard Combined-Cycle Configuration (1)

As an example, consider a gas turbine cycle that has an efficiency of 40%, which is a representative value for current Brayton Cycle gas turbines, and the Rankine Cycle has an efficiency of 30%. The combined-cycle efficiency would be 58%, which is a very large increase over either of the two simple cycles. Some representative efficiencies and power outputs for different cycles are shown in Figure 2 – Comparison of Efficiency and Power Output of Various Power Products, below.

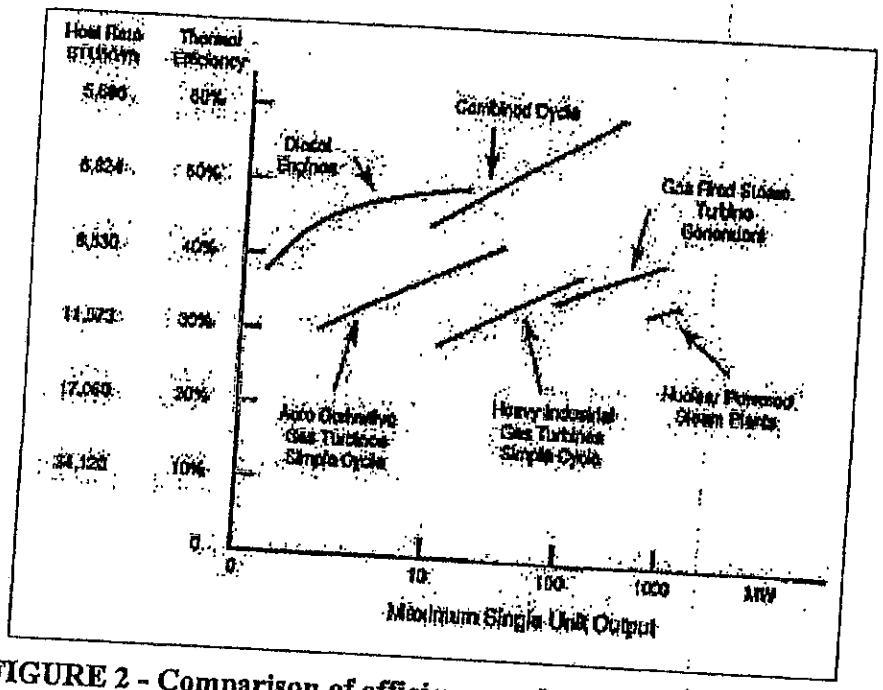

FIGURE 2 - Comparison of efficiency and power output of various power products [Bartol (1997)] (2)

Current Regulatory Authority for Output-Based Emissions

Innovative power technologies such as combined-cycle technology offer enormous potential to improve efficiency and enhance the environmental footprint of power generation through the reduction and/or prevention of air emissions to the environment. Currently, two thirds of the fuel burned to generate electricity in traditional fossil-fired steam boilers is lost. Traditional U.S. power generation facility efficiencies have not increased since the 1950s and more than one fifth of the U.S. power plants are more than 50 years old. In addition, these facilities are the leading contributors to U.S. emissions of carbon dioxide, NOx, sulfur dioxide ("SO2"), and other contaminants into the air and water.

The ability to recognize and regulate the efficiency benefits of pollution reduction and/or prevention through the use of combined-cycle technology is achieved through the use of Output-Based emissions standards, incorporated since September 1998 within the U.S. EPA's new source performance standards ("NSPS") for NOx, from both new utility boilers and new industrial boilers. Pursuant to section 407(c) of the Clean Air Act in subpart Da (Electric Utility Steam Generating Units) and subpart Db (Industrial-Commercial-Institutional Steam Generating Units) of 40 CFR part 60, the U.S. EPA revised the NOx emissions limits for steam generating units for which construction, modification, or reconstruction commenced after July 9, 1997 (3). Output-Based regulations are also exemplified by those used in the U.S. EPA's NOx Cap and Trade Program for the NOx State Implementation Plan

("SIP") Call of 1998, which uses units of measure such as lb/MWh generated or lb concentration ("ppm"), which relate to the emissions to the productive output – electrical generation of the process.(4)

The use of innovative technologies such as combined-cycle units reduces fossil fuel use and leads to multi-media reductions in the environmental impacts of the production, processing transportation, and combustion of fossil fuels. In addition, reducing fossil fuel combustion is a pollution prevention measure that reduces emissions of all products of combustion, not just the target pollutant (currently NOx) of a federal regulatory program.

Authority to Expand Pollution Control Equipment & Categories in Texas

Under Texas House Bill 3732 ("HB3732") enacted in 2007, Section 11.31 of the Texas Tax Code is amended to add certain plant equipment and systems to the current list of air, water, or land pollution control devices exempt from property taxation in Texas.

Specifically, the language reads as follows:

SECTION 4. Section 11.31, Tax Code, is amended by adding Subsections (k), (l), and (m) to read as follows:
(k) The Texas Commission on Environmental Quality shall adopt rules establishing a nonexclusive list of facilities, devices, or methods for the control of air, water, or land pollution, which must include:
(1) coal cleaning or refining facilities;
(2) atmospheric or pressurized and bubbling or circulating fluidized bed combustion systems and gasification fluidized bed combustion combined-cycle systems;
(3) ultra-supercritical pulverized coal boilers;
(4) flue gas recirculation components;
(5) syngas purification systems and gas-cleanup units;
(6) enhanced heat recovery systems;
(7) exhaust heat recovery boilers;
(8) heat recovery steam generators;
(9) superheaters and evaporators;
(10) enhanced steam turbine systems;
(11) methanation;
(12) coal combustion or gasification byproduct and coproduct handling, storage, or treatment facilities;
(13) biomass cofiring storage, distribution, and firing systems;
(14) coal cleaning or drying processes, such as coal drying/moisture reduction, air jigging, precombustion decarbonization, and coal flow balancing technology;
(15) oxy-fuel combustion technology, amine or chilled ammonia scrubbing, fuel or emission conversion through the use of catalysts, enhanced scrubbing technology, modified combustion technology such as chemical looping, and cryogenic technology;
(16) if the United States Environmental Protection Agency adopts a final rule or regulation regulating carbon dioxide as a pollutant, property that is used, constructed, acquired, or installed wholly or partly to capture carbon dioxide from an anthropogenic source in this state that is geologically sequestered in this state;
(17) fuel cells generating electricity using hydrogen derived from coal, biomass, petroleum coke, or solid waste; and
(18) any other equipment designed to prevent, capture, abate, or monitor nitrogen oxides, volatile organic compounds, particulate matter, mercury, carbon monoxide, or any criteria pollutant.
(l) The Texas Commission on Environmental Quality by rule shall update the list adopted under Subsection (k) at least once every three years. An item may be removed from the list if the commission finds compelling evidence to support the conclusion that the item does not provide pollution control benefits.
(m) Notwithstanding the other provisions of this section, if the facility, device, or method for the

control of air, water, or land pollution described in an application for an exemption under this section is a facility, device, or method included on the list adopted under Subsection (k), the executive director of the Texas Commission on Environmental Quality, not later than the 30th day after the date of receipt of the information required by Subsections (c)(2) and (3) and without regard to whether the information required by Subsection (c)(1) has been submitted, shall determine that the facility, device, or method described in the application is used wholly or partly as a facility, device, or method for the control of air, water, or land pollution and shall take the actions that are required by Subsection (d) in the event such a determination is made.

Under the TCEQ's recently updated "Tax Relief for Pollution Control Property – Application Instructions and Equipment and Categories List – Effective January 2008", the Equipment and Categories List - Part B ("ECL Part B") is a list of the pollution control property categories adopted and set forth in TTC Sec. 26.045(f). The taxpayer is to supply a pollution control percentage for the equipment listed in Part B via calculations demonstrating pollution control, prevention and/or reductions achieved by the listed equipment or systems.

The following property descriptions outline the environmental purpose, including the anticipated environmental benefit of pollution control additions considered under the Application Instructions' ECL Part B that have been constructed and placed into use at the Facility as of its placed-in-service date, or installed subsequent to in-service since 1994:

Property Descriptions

Item #1 Combined-Cycle Gas Turbine Plant Heat Recovery Steam Generator ("HRSG") and Support Systems Tier IV B-8

40 CFR Part 60 Subpart KKKK - Standards of Performance for Stationary Combustion Turbines

TAC Rule 116.110 Control of Air Pollution by Permits for New Construction or Modification - New Source Review Permits

NOTE: Permits issued under Texas Clean Air Act's Health & Safety Code Sections 382.011, applies to all electric generating units that emit air contaminants, regardless of size, and it is to reflect Best Available Control Technology ("BACT") for electric generating units on an output basis in pounds of NOx per megawatt hour, adjusted to reflect a simple cycle power plant.

The heat recovery steam generator ("HRSG") found in the Facility is a heat exchanger that recovers heat from a hot gas stream. It produces steam that can be used in a process or used to drive a steam turbine. A common application for an HRSG is in a combined-cycle power station, where hot exhaust from a gas turbine is fed to an HRSG to generate steam which in turn drives a steam turbine. This combination produces electricity in a more thermally efficient manner than either the gas turbine or steam turbine alone.

The Facility's HRSGs consist of three major components: the Evaporator, Superheater, and Economizer. The different components are put together to meet the operating requirements of the unit. Modular HRSGs normally consist of three sections: an LP (low pressure) section, a reheat/IP (intermediate pressure) section, and an HP (high pressure) section. The reheat and IP sections are separate circuits inside the HRSG. The IP steam partly feeds the reheat section. Each section has a steam drum and an evaporator section where water is converted to steam. This steam then passes through superheaters to raise the temperature and pressure past the saturation point.

Item #2 Steam Turbine and Support Systems Tier IV B-10

40 CFR Part 60 Subpart KKKK - Standards of Performance for Stationary Combustion Turbines

TAC Rule 116.110 Control of Air Pollution by Permits for New Construction or Modification - New Source Review Permits

NOTE: Permits issued under Texas Clean Air Act's Health & Safety Code Sections 382.011, applies to all electric generating units that emit air contaminants, regardless of size, and it is to reflect Best Available Control Technology ("BACT") for electric generating units on an output basis in pounds of NOx per megawatt hour, adjusted to reflect a simple cycle power plant.

The steam turbine(s) found in the Facility operate on the Rankine cycle in combination with the Brayton cycle, as described above. Steam created in the Facility HRSG(s) from waste heat that would have otherwise been lost to the atmosphere enters the steam turbine via a throttle valve, where it powers the turbine

and connected generator to make electricity. Use of HRSG/Steam Turbine System combination provides the Facility with an overall efficiency of greater than 50%. Steam turbine systems similar to the Facility's have a history of achieving up to 95% availability on an annual basis and can operate for more than a year between shutdown for maintenance and inspections. (5)

Pollution Control Percentage Calculation: Avoided Emissions Approach

To calculate the percentage of the equipment or category deemed to be pollution control equipment, the Avoided Emissions approach has been used. This approach relies on thermal output differences between a conventional power generation system and the combined-cycle system at the Facility. Specifically, the percentage is determined by calculating the displacement of emissions associated with the Facility's thermal output and subtracting these emissions from a baseline emission rate. These displaced emissions are emissions that would have been generated by the same thermal output from a conventional system.

Greater energy efficiency reduces all air contaminant emissions, including the greenhouse gas, carbon dioxide. Higher efficiency processes include combined-cycle operation and combined heat and power ("CHP") generation. For electric generation the energy efficiency of the process expressed in terms of millions of British thermal units ("MMBTU's") per Megawatt-hour. Lower fuel consumption associated with increased fuel conversion efficiency reduces emissions across the board – that is NOx, SOx, particulate matter, hazardous air pollutants, and greenhouse gas emissions such as CO2.

In calculating the percent exempt for the listed items from the ECL-Part B, we utilized Output-Based NOx allocation method for both power generation projects that replaced existing facilities and "Greenfield" power and heat generation facilities. We looked at the various fossil fuel technologies in use today and chose the baseline facility to be a natural gas fuel-fired steam generator. We benchmarked this conventional generation to the subject natural gas-fired combined cycle generator at the Facility. By doing so, we narrowed the heat rate factors as much as possible to be conservative and uniform in modeling. The benchmark heat rate factor is the following:

Natural Gas fuel-fired Steam Generator: 10,490 BTU's/kWh

This baseline heat rate purposely omits other fossil fuel sources in order to eliminate impurity type characteristics, which in turn eliminated the NOx emission and cost of control differences of each fossil fuel and generator type. Comparing the emissions impact of different energy generation facilities is concise when emissions are measured per unit of useful energy output. For the purpose of our calculations, we converted all the energy output to units of MWh (1 MWh = 3.413 MMBTU), and compared the total emission rate to the baseline facility.

The comparison steps to calculate the NOx reduction is as follows:

Calculation (Reference Schedule A)

Step 1 – Subject Output-Based Limit Calculation (lbs NOx / MWh)

(Input-based Limit (lbs NOx/MMBTU)) X (Heat Rate (Btu/kWh)) / (1,000,000 Btu / 1,000 kWh) = Output: (lbs NOx/MWh),

Step 2 – Subject Output Conversion Calculation (NOx Tons / Year)

(Output (lbs NOx/MWh) X (Unit Design Capacity (MW)) X (Capacity Factor) X ((365 Days) X (24 hrs/day)) / 2,000 lbs = Output: (NOx Tons/Year)

Step 3 – Baseline Output-Based Limit Calculation (lbs NOx / MWh)

(Input-based Limit (lbs NOx/MWh)) X (Heat Rate (Btu/kWh)) / (1,000,000 Btu / 1,000 kWh) = Output: (lbs NOx/MWh)

Step 4 – Baseline Output Conversion Calculation (NOx Tons / Year)

(Output (lbs NOx/MMBtu) X (Unit Design Capacity (MW)) X (Capacity Factor) X ((365 Days) X (24 hrs/day)) / 2,000 lbs = Output: (NOx Tons/Year)

Step 5 – Percent NOx Reduction Calculation

$((\text{Output Baseline})_{\text{step 4}} - (\text{Output Subject})_{\text{step 2}}) / (\text{Output Subject})_{\text{step 2}}$ = % Reduction Output Subject

Step 6 – Percent Exempt Calculation

(Total Subject Facility Cost) X (% NOx Reduction) = Capital Cost of NOx Avoidance

Step 7 – Percent Exempt Calculation

Total Cost of NOx Avoidance / Total Cost of HB 3732 Equipment = % Exempt

- If % Exempt is greater than 100% HB 3732 Equipment is 100% Exempt
- If % Exempt is less than 100% then HB 3732 Equipment is partially exempt at the Step 6 calculation.

NOTE: See the attached calculation sheet for the details regarding Facility-specific calculations and property tax exemption percentage results based upon these calculations.

REFERENCES

1. "Output-Based Regulations: A Handbook for Air Regulators", U.S. Environmental Protection Agency, Office of Atmospheric Programs – Climate Protection Partnerships Division, August, 2004, p.4.

2. "Output-Based Emissions Standards; Advancing Innovative Energy Technologies", Northeast-Midwest Institute; 2003, p. 9.

3. IBID, p.13.

4."Output-Based Regulations: A Handbook for Air Regulators", U.S. Environmental Protection Agency, Office of Atmospheric Programs – Climate Protection Partnerships Division, August, 2004, p.4.

5. http://www.cogeneration.net/Combined_Cycle_Power_Plants.htm

6. "Output-Based Emissions Standards; Advancing Innovative Energy Technologies", Northeast-Midwest Institute; 2003, p. 9.

9. PARTIAL PERCENTAGE CALCULATION

N/A.

10. PROPERTY CATEGORIES AND COSTS

See attached Schedule 10.

11. EMISSION REDUCTION INCENTIVE GRANT

Will an application for an Emission Reduction Incentive Grant be on file for this property/project:

[ ] Yes [X] No

12. APPLICATION DEFICIENCIES

After an initial review of the application, the TCEQ may determine that the information provided with the application is not sufficient to make a use determination. The TCEQ may send a notice of deficiency, requesting additional information that must be provided within 30 days of written notice.

13. FORMAL REQUEST FOR SIGNATURE

By signing this application, you certify that this information is true to the best of your knowledge and belief.

NAME: _____ DATE: 22 April 2008

TITLE: Director

COMPANY: Duff and Phelps LLC

Under Texas Penal Code, Section 37.10, if you make a false statement on this application, you could receive a jail term of up to one year and a fine up to $2,000, or a prison term of two to 10 years and a fine of up to $5,000.

14. DELINQUENT FEE/PENALTY PROTOCOL

This form will not be processed until all delinquent fees and/or penalties owed to the TCEQ or the Office of the Attorney General on behalf of the TCEQ are paid in accordance with the Delinquent Fee and Penalty Protocol. (Effective 9/1/2006)

Nueces Bay Power Station
2002 East Navigation Blvd
TCEQ Use Determination Application - 2007
Scheule 10
Tier IV

10. PROPERTY CATEGORIES AND COST

PROPERTY	PROJECT ID. NO.	IN SERVICE DATE	TAXABLE ON OR BEFORE 1/1/94? (Y / N)	TIER IV DECISION FLOW CHART BOX #	ECL NUMBER	ESTIMATED PURCHASE COST	% EXEMPT	EXEMPT COST
Heat Recovery Steam Generators (HRSG)	1	CWIP	N	3	B-8	$76,366,929	100%	$76,366,929
Steam Turbine Systems	2	CWIP	N	3	B-10	$44,736,785	100%	$44,736,785
					Tier IV Total	$121,103,714		$121,103,714

Tupra Power Group LLC
Nueces Bay
Schedule A - 2008 Thermal Efficiency Calculation

Subject Details:

Average Heat Rate [1]	8,000 (Btu/kWh)
NOx Emissions [2]	403.0 Tons / year
Plant Capacity [3]	648 MW
Capacity Factor [4]	100.00%
Technology [5]	Combined Cycle
Total Subject Facility Cost [6]	$432,941,730
Total Cost of Tier IV Equipment [7]	$121,103,714

Baseline Details:

Average Heat Rate [8]	10,490 Btu/kWh
Technology [9]	Steam Turbine

STEP 1
Subject Output Based Limit Calculation (lbs NOx / MWh)

Input-based Limit (lbs NOx/MMBtu)	x	Heat Rate (Btu/kWh)	/	Unit Conversion (1,000,000 Btu / 1000 kWh)	=	Output-based Limit (lbs NOx/MWh)
0.0185		8,000		1,000		0.1482

STEP 2
Subject Output Conversion Calculation (NOx Tons / Year)

Output-based Limit (lbs NOx/MWh)	x	Capacity (MW)	x	Capacity Factor	x	Unit Conversions (365 days * 24 Hours / 2,000 lbs)	=	Output NOx (Tons/Year)
0.1482		648		100.00%		4		403.0

STEP 3
Baseline Output-Based Limit Calculation (lbs NOx / MWh)

Input-based Limit (lbs NOx/MMBtu)	x	Heat Rate (Btu/kWh)	/	Unit Conversion (1,000,000 Btu / 1000 kWh)	=	Output-based Limit (lbs NOx/MWh)
0.0185		10,490		1,000		0.1941

STEP 4
Baseline Output Conversion Calculation (NOx Tons / Year)

Output-based Limit (lbs NOx/MWh)	x	Capacity (MW)	x	Capacity Factor	x	Unit Conversions (365 days * 24 Hours / 2,000 lbs)	=	Output NOx (Tons/Year)
0.1941		648		100.00%		4		528.0

STEP 5
Percent NOx Reduction Calculation

(Output Baseline	-	Output Subject)	/	Output Subject	=	% NOx Reduction
528.0		403.0		403.0		31.0%

STEP 6
Percent Exempt Calculation

Total Subject Unit Cost	X	% NOx Reduction	=	Capital Cost of NOx Avoidance
$432,941,730		31.0%		$134,211,936

STEP 7
Percent Exempt Calculation

Total Cost of NOx Avoidance	/	Total Cost of HR 3732 Equipment	=	% Exempt
$134,211,936		$121,103,714		110.8%

Conclude	100%

(1) - Heat rate represents the anticipated heat rate (HHV) and was provided by the client
(2) - NOx emissions is the NOx pollutant emission permit limit in tons per year provided by the client
(3) - Plant capacity is the average nominal capacity and was provided by the client
(4) - Capacity factor is the maximum operating level allowed under the emissions permit provided by the client
(5) - Technology represents the actual technology of the subject
(6) - Total subject facility cost represents the total cost to build the entire facility and it was determined based on data provide by the client
(7) - Total Tier IV equipment was determined by allocating the eligible TCEQ ECL part B equipment and their associated cost from actual data provide by the client
(8) - Baseline heat rate was published by the Energy Information Administration ("EIA")
(9) - Baseline technology represents the technology that the subject would have replaced at the time of the subjects construction

Attachment 3

Pre-Repowering Efficiency and Air Emissions Unit 1

FACILITY_NAME	UNITID	OP_YEAR	HEAT_INPUT	NOX_RATE lbs/ MMBTU	NOX_MASS TONs	Gross Load (MW-H)	CO2 Tons	Operating Hours	NOX TONS/MW-HR
Barney M. Davis	1	2003	9,882,095	0.14	814.4	923,389	611,010.3	8,398	0.0009
Barney M. Davis	1	2004	1,365,091	0.1	115.4	115,931	81,133.3	1,273	0.0010
Barney M. Davis	1	2005	4,018,371	0.13	343.1	363,700	238,809.6	3,423	0.0009
Barney M. Davis	1	2006	3,861,536	0.12	319.8	361,211	229,487.0	2,820	0.0009
Barney M. Davis	1	2007	1,815,633	0.15	198.3	173,553	107,904.3	1,658	0.0011
Barney M. Davis	1	2008	4,749,542	0.13	420.8	436,979	282,257.8	3,852	0.0010
Barney M. Davis	1	2009	3,199,412	0.15	332.1	315,615	190,145.3	2,112	0.0011
Barney M. Davis	1	2010	660,763	0.1	48.3	53,988	39,255.9	843	0.0009
Barney M. Davis	1	2011	1,906,567	0.1	131	162,795	113,303.8	1,761	0.0008
Barney M. Davis	1	2012	1,674,769	0.012	138.1	138,581	99,528.2	1,494	0.0010

Pre-Repowering Efficiency and Air Emissions Unit 2

FACILITY_NAME	UNITID	OP_YEAR	HEAT_INPUT	NOX_RATE lbs/MMBTU	NOX_MASS TONs	Gross Load (MW-H)	CO2 Tons	Operating Hours	NOX TONS/MW-HR
Barney M. Davis	2	2003	2,094,717	0.1	152.7	189,000	131,053.6	1,606	0.0008
Barney M. Davis	2	2004	11,922,584	0.12	837.6	1,070,886	708,543.8	7,750	0.0008
Barney M. Davis	2	2005	6,256,894	0.11	388.7	516,358	371,836.8	5,580	0.0008
Barney M. Davis	2	2006	2,965,995	0.15	280.5	233,671	176,265.6	1,763	0.0012
Barney M. Davis	2	2007	1,339,322	0.09	82.8	120,870	79,592.2	1,060	0.0007
Barney M. Davis	2	2008	3,419,274	0.15	294.4	312,553	203,201.2	2,679	0.0009

Post-Repowering Efficiency and Air Emissions BMD Units 3, 4 & NB Units 8, 9

FACILITY_NAME	UNITID	OP_YEAR	HEAT_INPUT	NOX_RATE lbs/MMBTU	NOX_MASS TONs	Gross Load (MW-H)	CO2 Tons	Operating Hours	NOX TONS/MW-HR
Barney M. Davis	3	2011	8,264,568	0.03	73.3	1,064,646	491,149.8	5637	0.0001
Barney M. Davis	3	2012	5,289,883	0.02	40.1	687,398	314,371.3	3524	0.0001
Barney M. Davis	4	2011	8,092,698	0.03	68.9	1,081,929	480,942.4	5742	0.0001
Barney M. Davis	4	2012	4,943,162	0.02	36.3	663,495	293,764.0	3425	0.0001
Nueces Bay	8	2011	7,989,948	0.02	52.7	1,093,549	474,830.6	5692	0.0000
Nueces Bay	8	2012	5,011,986	0.02	30	687,430	297,856.4	3517	0.0000
Nueces Bay	9	2011	7,978,245	0.02	45.5	1,092,722	474,132.6	5558	0.0000
Nueces Bay	9	2012	5,117,020	0.02	29.5	698,703	304,095.0	3545	0.0000

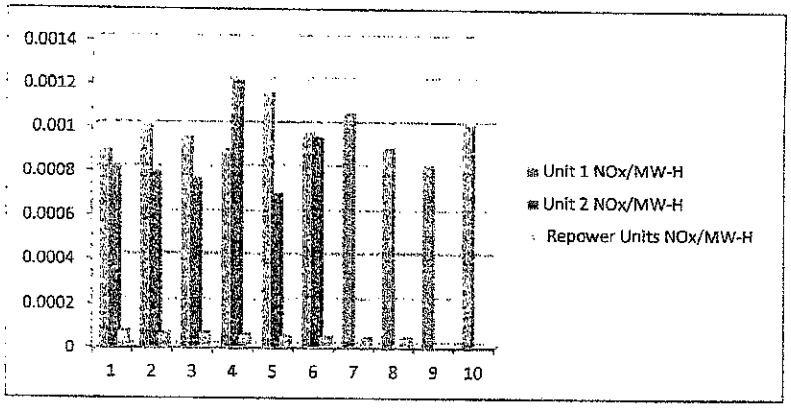
0.0014
0.0012
0.001
0.0008
0.0006
0.0004
0.0002
0
1 2 3 4 5 6 7 8 9 10
Unit 1 NOx/MW-H
Unit 2 NOx/MW-H
Repower Units NOx/MW-H

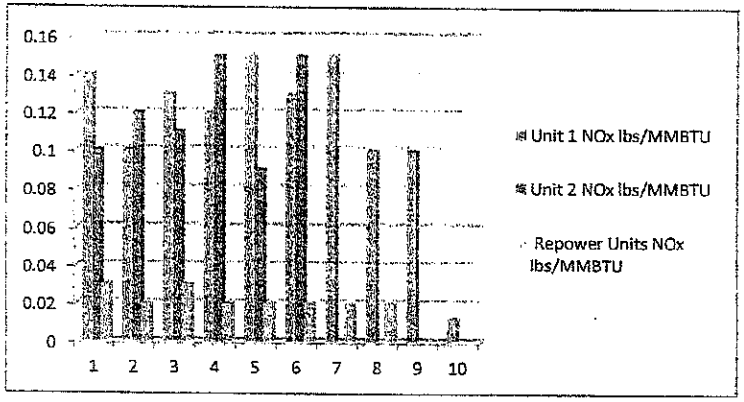
0.16
0.14
0.12
0.1
0.08
0.06
0.04
0.02
0
1 2 3 4 5 6 7 8 9 10
Unit 1 NOx lbs/MMBTU
Unit 2 NOx lbs/MMBTU
Repower Units NOx lbs/MMBTU

Attachment 6

RICHARD L. "RICK" HARDCASTLE
HOUSE OF REPRESENTATIVES

November 1, 2007

Via Facsimile

STATE OF TEXAS
OCT 26 2012

Ms. Kristin Smith
Office of Legal Services, MC 205
Texas Commission on Environmental Quality
12100 Park 35 Circle
Austin TX 78753

Re: Rule Project Number 2007-055-017-AS

Dear Ms. Smith:

I am writing to provide my comments on the proposed TCEQ rules in the above-referenced rule docket which, in part, involves the implementation of HB 3732. As the author of HB 3732, I support the rules as proposed in the October 5, 2007, Texas Register and commend the TCEQ staff on a job well done in implementing the letter and intent of the Prop. 2 program and the changes to that program passed by HB 3732.

Attached are two letters that I have previously written that relate to issues still under consideration in your rulemaking. The first letter (Attachment 1) was sent to the TCEQ staff and Commissioners on August 1, 2007, in order to address some questions that had been raised at that time regarding the intended scope and applicability of HB 3732. Since that time, some additional questions have been asked and formally posed in both the preamble to the proposed rule and in an opinion request that was submitted by the TCEQ Chairman to the Attorney General of Texas. The second letter (Attachment 2) was sent to the Attorney General on October 31, 2007, in response to the TCEQ Chairman's opinion request.

Together, the two attached letters reflect my views on several of the issues that are still before the Commission in this rulemaking and I include the comments made in those letters in this letter by reference to avoid repetition.

Again, I appreciate your efforts to timely implement HB 3732 and, if I can be of any assistance to you, please don't hesitate to contact me.

Sincerely,

Representative Rick Hardcastle

RH/mw

CAPITOL OFFICE:
P.O. Box 2910
AUSTIN, TX 78768-2910
(512) 463-0526

DISTRICT OFFICE:
1930 FANNIN STREET
VERNON, TX 76384
(940) 553-3825

RICHARD L. "RICK" HARDCASTLE
HOUSE OF REPRESENTATIVES

ATTACHMENT 1

August 1, 2007

Ms. Grace Montgomery Faulkner
Deputy Director, Administrative Services
Texas Commission on Environmental Quality
P.O. Box 13087
Austin, TX 78711-3087

Ms. Faulkner,

It has come to my attention that questions have arisen about the legislative intent of Section 4 of HB 3732 which amends Section 11.31 of the Tax Code (commonly referred to as the "Prop. 2" or the "pollution control property" tax exemption). As the House author of the bill, I have a few things I would like to clarify regarding the intent and scope of that part of the bill.

1. Scope of Bill and Possible Impact on Industries Other than Electric Power Generation

The reason I filed HB 3732 was to help ensure that Texas continues to maintain and build power plants that are as clean as possible, but still capable of using a diverse range of affordable feedstocks such as coal, biomass, petroleum coke, and solid waste. Helping electricity remain affordable is an important aspect of the bill along with the obvious environmental protection goals of the bill. With that overall intent in mind, we focused the equipment list contained in Sections 4 and 5 of the bill on electric generation projects.

HB 3732 clarifies, but does not alter, the TCEQ's underlying legal authority under the Prop. 2 program. While I was focused on electric generation in filing HB 3732, I am aware that TCEQ has always had the authority (since 1994) under the Prop. 2 program to add items to the predetermined equipment list (PEL), including equipment that resembles equipment included on the HB 3732 list that are used in industries other than the electric generation industry. It was not my intent to alter that authority with this legislation. Nor does this legislation change the fundamental requirement of the Prop. 2 program - that equipment needs to control pollution, in whole or in part, in order to be eligible for a full or partial exemption.

CAPITOL OFFICE:
P.O. Box 2910
Austin, TX 78768-2910
(512) 463-0526

DISTRICT OFFICE:
1930 Fannin Street
Vernon, TX 76384
(940) 553-3825

An extreme example of a potential misinterpretation would be to interpret item No. 1 on the list ("coal cleaning or refining facilities") as an exemption for an entire oil refinery. Such an interpretation is entirely without merit given the context of the statute and flies in the face of the bill's fundamental purpose. The "refining" word was added to the bill to clarify that, in addition to coal cleaning, the bill would encourage folks to "refine" coal before it is used. I became aware during the legislative session of the difference between the two technologies and that is why we adjusted the language in the bill.

We made it clear in the legislation that the list was not exclusive and included a general provision (item no. 18) which I intended to give the TCEQ discretion to add additional technologies when supplementing their PEL in the future as they see fit. This provision should not be interpreted as vastly expanding the fundamental purpose and scope of HB 3732.

2. Recognition of Pollution Control Exemption Despite Product or Co-product Generation by the Same Equipment

I understand that there has historically been a debate about whether and to what extent pollution control tax exemptions can be allowed for equipment that might also be involved in production. I am also aware of the debate that has existed when a facility has figured out a way to sell, as a product, materials that accumulate within a pollution control device (e.g., fly ash). One of the goals of the legislation this session was to ensure that TCEQ had the authority and direction from the legislature to recognize that pollution control benefits can be derived from the manner in which fuel is prepared and used, and from increasing the efficiency of certain facilities. By doing so, the amount of fuel needed and the total amount of pollution emitted can be reduced. I did not intend, nor do I support, an interpretation of anything in HB 3732 to prevent electric generating facilities from receiving exemptions for equipment simply because they also derive profit from a given piece of equipment or process. If it reduces pollution, it qualifies.

I am aware that some of the items on the HB 3732 list include entire generation processes like "fluidized bed combustion systems" and "ultra-supercritical pulverized coal boilers" which were included for the reason stated above – the manner in which the fuel is used helps reduce pollution. Consistent with the process put in place by HB 3121 in 2001, if TCEQ receives documentation justifying that less than 100% of an exemption should be granted for such processes, we have afforded the TCEQ discretion under the bill to include an item on the PEL for less than 100%. I understand that the TCEQ's initial plan is to assume a 100% exemption unless documentation establishes a legitimate basis for a lesser percentage. I support that approach because, again, the goal of the legislation is to reduce pollution.

RICHARD L. "RICK" HARDCASTLE
HOUSE OF REPRESENTATIVES

ATTACHMENT 2

October 31, 2007

The Honorable Greg Abbott
Attorney General
State of Texas
P.O. Box 12548
Austin, Texas 78711

Re: Attorney General Opinion Request (RQ-0605-GA) for interpretation of the intent of H.B. 3732, 80th Regular Session, Texas Legislature

Dear General Abbott:

This letter is being submitted in response to the request for an attorney general opinion submitted by Buddy Garcia, Chairman, Texas Commission on Environmental Quality ("TCEQ") regarding the legislative intent of H.B. 3732, which I authored and Senator Averitt sponsored in the Senate during the 80th Legislature.

The purpose of H.B. 3732 was to encourage the construction of advanced clean energy projects ("ACEPs") to meet the growing demand for electricity in Texas as well as increasing demands for pollution control. The incentives include grants, loans, tax exemptions and a streamlined permitting process. The bill also clarified current law regarding pollution control property exemptions and ensures that new and existing power plants receive expedited determinations for certain categories of pollution control equipment.

The question submitted by Chairman Garcia is whether "H.B. 3732 and its legislative history, limits the TCEQ's rule implementation of §11.31(k) [and §26.045(f)] of the Texas Tax Code to pollution control property associated with advanced clean energy projects, as defined in Texas Health and Safety Code, §382.0037"

It was not and is not my intent as the author of the bill to limit equipment eligible for a property tax exemption under §11.31(k) (or the corresponding change in §26.045(f)) of the Tax Code to advanced clean energy projects. In addition, I am confident you will not find anything in the legislative history to support that interpretation. In fact, all indicators of intent are quite the opposite. Since it will take several years to bring ACEPs online, we wanted to encourage current power plants to continue installing pollution control equipment.

CAPITOL OFFICE:
P.O. Box 2910
AUSTIN, TX 78768-2910
(512) 463-0526

DISTRICT OFFICE:
1930 FANNIN STREET
VERNON, TX 76384
(940) 553-3825

While I have provided this background information to give you some context on why the statute was drafted the way it was, I understand your office will focus primarily on the unambiguous language of the statute. As Attorney General Cornyn stated: "we must first consider the statute's plain and common meaning on the presumption that the legislature intended the plain meaning of its words. If possible, we must ascertain the legislature's intent from the language it used in the statute and not look to extraneous matters for an intent the statute does not state ... [w]e look to legislative history only if a statute is ambiguous."[2]

The statute is not ambiguous. Section 11.31(k) states that the "Texas Commission on Environmental Quality shall adopt rules establishing a nonexclusive list of facilities, devices, or methods for the control of air, water, or land pollution, which must include.... [a list of 18 types of equipment follows]". As Attorney General Abbott stated in Opinion No. GA-0202, "[w]e presume that every word or phrase in a statute has been chosen for a particular purpose."[3] The opposite is also true, if the legislature chooses not to use a particular word or phrase, it is for a reason.

In drafting §11.31(k) (and the corresponding change in §26.045(f)) of the Tax Code, if the legislature wanted to limit its application to pollution control equipment for ACEPs, we could have instructed the TCEQ to adopt rules "establishing a nonexclusive list of facilities, devices, or method for the control of air, water or land pollution *associated with advanced clean energy projects*..." We did not, however, choose to use these words, and we did not tie it in some other way to the definition of ACEPs. This was no accident.

In fact, the legislature purposely uses the word "nonexclusive," which means it did not want to place any unnecessary limitations on the type of equipment provided an exemption under this section of the Code as long as it met the definition contained in §11.31(b) adopted by the 73rd Legislature.[4] Attorney General Opinion No. DM-448 says "[a] statute is presumed to have been enacted by the legislature with complete knowledge of and with reference to the existing law."[5] The law prior to the 80th Legislature did not limit the tax exemptions under this section to ACEPs, and by not placing such a limitation in subsection (k), the legislature understood that the existing definition would apply.

---

[2] Op. Tex. Att'y Gen. No. JC-0567 at 4 (2002).
[3] Op. Tex. Att'y Gen. No. JC-0567 at 4 (2002).
[4] Op. Tex. Att'y Gen. No. GA-0202 at 3 (2004).
[5] Section 11.31(b), Texas Tax Code, defines "facility, device, or method for the control of air, water, or land pollution" as "land that is acquired after January 1, 1994, or any other structure, building, installation, excavation, machinery, equipment, or device, and any attachment or addition to or reconstruction, replacement, or improvement of this property, that is used, constructed, acquired, or installed wholly or partly to meet or exceed rules or regulations adopted by an environmental protection agency of the United States, this state, or a political subdivision of this state for the prevention, monitoring, control, or reduction of air, water or land pollution."
[6] Op. Tex. Att'y Gen. No. DM-448 at 4 (1997).

Although the statute's language is unambiguous and there is no reason to look to the legislative history for guidance, it should be pointed out that nothing in the legislative history of the bill contradicts the plain meaning of the statute. I am confident you will not find any evidence to suggest that these tax exemptions should be limited to ACEPs.

Thank you for your service to our great state and your consideration of this letter. I understand that your resources are limited and that you have numerous pending opinion requests to address. That being said, the Commission is under a statutory deadline to adopt rules on this issue by January 1, 2008, so any effort you can make to expedite the response to Chairman Garcia's request would be greatly appreciated.

Respectfully submitted,

Representative Rick Hardcastle

RH/mw

JACKSON WALKER L.L.P.
ATTORNEYS & COUNSELORS

Michael J. Nasi
(512) 236-2216 (Direct Dial)
(512) 391-2194 (Direct Fax)
Email: mnasi@jw.com

June 24, 2013

Via Hand Delivery
Mr. Chance Goodin
Team Leader, Stationary Sources Programs
Air Quality Division
TCEQ
Building C, 3rd Floor
Austin, Texas 78711-3087

TEXAS COMMISSION ON ENVIRONMENTAL QUALITY
2013 JUN 24 PM 4:41
CHIEF CLERKS OFFICE

Re: Response to Notice of Technical Deficiency
CER-Colorado Bend Energy LLC (formerly Navasota Wharton Energy Partners LP)
Colorado Bend Facility
Application No. 11926

Dear Mr. Goodin:

On February 21, 2013, the Executive Director ("ED") of the Texas Commission on Environmental Quality ("TCEQ") issued a Notice of Deficiency ("NOD") to CER-Colorado Bend Energy LLC ("Colorado Bend" or "Applicant") regarding its application for a use determination for the heat recovery steam generators ("HRSGs") and enhanced steam turbines ("ESTs") located at its Colorado Bend Facility. On March 20, 2013, the ED granted an extension of the deadline to respond to the NOD, resulting in a new response due date of June 24, 2013. As part of this response to the NOD, Colorado Bend is providing additional information in support of its original application. With the addition of the supplemental information provided in this response, the application is current.

I. Eligibility For the Prop 2 Program

It is unquestioned that HRSGs and the turbines that utilize their steam provide an environmental benefit by reducing the amount of fuel required to produce each megawatt-hour ("MWh") of electricity. By reusing waste heat, the HRSGs are able to produce additional steam which the steam turbine uses to generate additional electricity, all while no additional fuel is consumed. The reduction in the amount of fuel consumption on a per MWh basis reduces the associated emissions of nitrogen oxides ("NOx"), hazardous air pollutants ("HAPs"), and greenhouse gases ("GHGs").

Empirical data has been presented to the TCEQ that demonstrates the indisputable reduction of NOx emissions on a MWh basis resulting from the addition of a HRSG and associated steam turbine system to a simple cycle gas-fired power plant. On top of the environmental benefits they provide, HRSGs and steam turbines are used to meet or exceed a variety of environmental regulations, including: New Source Performance Standards ("NSPS") and Best Available

Control Technology ("BACT") standards associated with both NOx and GHGs, as well as NOx standards arising from the Clean Air Interstate Rule ("CAIR") and several other environmental rules. For further discussion of the specific environmental rules that have been met or exceeded by use of HRSGs and steam turbines, please see **Attachment A**.

II. The Current CAP, As Interpreted by ED Staff and Prescribed in the NOD, Does Not Follow Legislative Directives in the Tax Code

Under TCEQ rules, Tier III applicants are required to use the Cost Analysis Procedure ("CAP") to calculate the appropriate use determination. And while Tier IV applicants are not required by TCEQ rules to use the CAP, ED staff has requested that each of the Tier IV applicants, include a use determination calculation based on the CAP, in addition to any other proposed calculations. In the NOD, the ED staff prescribed certain variables that must be applied by both Tier III and Tier IV applicants in developing their CAP calculations.

However, the CAP, as interpreted by the ED staff and as prescribed in the NOD, conflicts with the statutory language in Tex. Tax Code §11.31(k). Tax Code §11.31(k) specifically designates this equipment as pollution control property and explicitly restricts the TCEQ's options for not recognizing it as such to a process set out in 11.31(l) which provides that if the TCEQ wishes to remove an item from the list in §11.31(k), it must go through a formal rule-making process, and the removal must be supported by compelling evidence that the item does not provide pollution control benefits. The Legislature did not afford the TCEQ the option to forego rulemaking and apply case-by-case interpretations of its rules that always results in a negative use determination for those items it specifically included on the statutory list of pollution control property.[1] Yet, the ED staff interprets and applies the CAP in the NOD in a manner that does exactly that - always results in a negative use determination for equipment that the Legislature specifically designated as pollution control property. What follows is an explanation of why the staff's interpretation of the CAP generates this unlawful result followed by a description of how the CAP can be interpreted in a manner that does not violate the tax code and potentially establishes a framework for the commission's handling of these types of applications now and in the future.

Although we disagree with the regulatory interpretations on which the NOD is based, in an effort to comply with the ED staff's request, Colorado Bend has applied the CAP as prescribed by the staff in its NOD (see Table 1). As demonstrated in Table 1 and based upon a review of similar analyses of similar applications, it is clear that following the ED staff's recommended CAP Model will always result in a significant negative use determination for HRSGs and ESTs.

As a threshold matter, the Commission should avoid interpreting its rules in manner that will always generate a negative use percentage for equipment that has been legislatively assumed to have pollution control benefits, especially when those pollution control benefits have been fully documented. In fact, given that the staff's interpretation of the CAP always results in a negative use determination means that the staff's interpretation is tantamount to an ad hoc rulemaking to remove thus equipment from eligibility. Such a procedure clearly violates Tax Code §11.31(l),

[1] Tex. Tax Code § 11.31(k)(8) and (10).

which explicitly requires the Commission to go through formal rulemaking and satisfy a high burden before disallowing eligibility for this equipment.

When it created the list in §11.31(k), the Legislature was not merely providing a list of equipment for which the TCEQ must conduct an expedited review. The Legislature was prescribing a list of equipment that was to be considered pollution control property. Just because the ED is required under 11.31(g-1) to evaluate the equipment on the 11.31(k) list using the standards and methods used for all equipment does not mean that the staff has the ability to disregard the legislatively determined pollution control benefits and interpret its standards and methods in a way that generates arbitrarily negative results without giving any regard to the emission reduction benefits of the equipment in question.

For further discussion of the CAP formula, as prescribed by the ED staff, how it fails to properly account for pollution prevention, and how it generates an arbitrarily negative use determination percentage, please see **Attachment B**.

III. Proposed Methodology

Colorado Bend has interpreted the regulations and applied the CAP in a manner that is in harmony with the documented and legislatively-sanctioned environmental benefits of HRSGs and their associated steam turbine systems. As more fully described in **Attachment C**, not only is there a regulatory basis for the "Clarified CAP" approach reflected in Attachment C, it also comports with agency precedent on a few important points.

IV. Conclusion

Based on the results of the Clarified CAP Model that Colorado Bend has developed to accurately account for the portion of HRSGs and steam turbines that is attributable to a pollution prevention function, Colorado Bend submits that the appropriate use determination is 100 percent (see **Attachment D**). Finally, although many of the issues raised in the NOD are addressed in some way by this narrative and Attachments A-D, in order to be fully responsive to the NOD, an issues-by-issue response to the items listed in the NOD is contained in **Attachment E.**

Colorado Bend acknowledges that the resulting 100 percent positive use determination does not align closely with other use determinations using the Clarified CAP Model. Based on the number of applicants submitting detailed information regarding representative cost and revenue assumptions for each variable, Colorado Bend believes the ED has the tools to establish an appropriate use percentage that properly accounts for the environmental benefits and emission reductions provided by HRSGs ESTs. Should the ED develop such a use percentage using the Clarified CAP Model as described herein, that can be applied to all HRSGs and ESTs, Colorado Bend would accept a percentage lower than 100 percent.

Sincerely,

Benjamin Rhein

for Michael J. Nasi

Attachments

Attachment A

ATTACHMENT A

Environmental Rules and Regulations Met or Exceeded by the Use of HRSGs and Steam Turbines

From the outset, it must be emphasized that the structure of 11.31 and the manner in which it was amended in 2007 by the Texas Legislature makes it clear that applications that relate to equipment contained on the 11.31(k) list are not required to provide citation to document that the equipment helps to meet or exceed an environmental rule. That is statutorily assumed to be the case in light of the fact than applicant is explicitly excused from submitting information demonstrating the environmental benefits of the equipment in question. This, in and of itself, should suffice to satisfy any inquiry about whether applications relating to HRSGs and ESTs are obliged to include environmental citation to support their claim for statutory eligibility.

Nonetheless, in order fully response to the information requests by the ED staff, what follows is a discussion of the rules that are being met or exceeded by Colorado Bend's use of HRSGs and ESTs.

I. Rules or Regulations that are Met or Exceeded by HRSGs and ESTs

It should be noted that Issue 2 of the NOD does not honor Chairman Shaw's specific directive to provide "an opportunity for ***additional*** citations to be provided for what those rules are" but instead attempts to limit the discussion to citations already provided by the Applicant in its original application. As Chairman Shaw indicated, the ED should be providing the Applicant an opportunity to demonstrate whether any environmental regulation exists that is being met or exceeded through the use of the HRSGs and ESTs. It does not matter whether the applicable environmental rule is an EPA regulation such as CAIR or county-specific regulations promulgated by TCEQ, the question before the Commission is simply whether any environmental rule is being met or exceeded.

A HRSG's use of otherwise wasted heat from the turbine exhaust gas results in higher plant thermal efficiency (net power output of the plant divided by the heating value of the fuel), compared to other power generation technologies. Specifically, the equipment's increased thermal efficiency, as compared to a traditional steam boiler unit, reduces the fuel needs for the same power outputs, while emitting no additional air emissions. It is important to note that the lower fuel consumption associated with increased fuel conversion efficiency not only reduces NOx emissions, but also reduces emissions of hazardous air pollutants and greenhouse gas emissions, such as CO_2. The use of HRSGs, ESTs, and combined cycle technology is a crucial piece of the state's power fleet as we attempt to meet a growing demand for electricity and maintain healthy air quality.

It is important to note that, under Tex. Tax Code § 11.31(b), to qualify for an exemption the equipment must be used "to meet or exceed rules or regulations adopted by any environmental protection agency ... for the prevention, monitoring, control, or reduction of air, water, or land pollution." There is no statutory definition of the word "exceed," but the only reasonable interpretation of that term in this context is to include actions that not only reduce emissions below an applicable limit, but also actions that do so before they are absolutely mandated of the particular facility. Once a rule is duly adopted and time is all that stands between that rule mandating a reduction at a particular plant, it is wholly unreasonable for the ED staff to narrowly

construe the term "exceed" in the Tax Code to prevent proactive projects from qualifying under 11.31 while reserving eligibility only for those sites that wait until the last minute and they are absolutely mandated to act. Not only would this create an absurd disincentive for proactive pollution prevention, it ignores the reality that no member of the regulated community can afford to always operate in a reactive, as opposed to proactive, manner.

Therefore, the only reasonable interpretation of 11.31 is to recognize that "exceed[ing]" an environmental rule includes complying with duly-adopted environmental rules prior to the ultimate compliance date that might be afforded under the rule. As discussed further below, this is an important recognition in the context of pollution prevention approaches like HRSGs and ESTs because, in many instances, the emission reductions achieved by this equipment are required of some, but not all sites at this point in time, but the passage of time and compliance deadlines will ultimately make such reductions mandatory at every site.

II. CAIR

There are several applicable regulations which are being met or exceeded through the use of HRSGs. Most notably, Texas and 27 other states are subject to the EPA's Clean Air Interstate Rule ("CAIR"), which specifically calls for those states to reduce emissions of NO_X and SO_2 from electric generating facilities.[2] As described in the Application itself, Colorado Bend's HRSGs and ESTs help meet or exceed the CAIR requirements primarily by reducing fossil fuel consumption and related NOx emissions. The use of Colorado Bend's HRSGs and ESTs in the combined cycle configuration results in significantly lower NOx emissions for the same electric power that could be generated by a simple cycle plant without pollution control equipment. HRSGs and ESTs accomplish this result by capturing/recycling and using heat generated by its combustion turbines, which then convert water into steam to power steam (rather than natural gas) turbines to produce additional power without use of additional fossil fuel or its associated NOx emissions. Stated conversely, without its HRSGs and ESTs, Colorado Bend would be unable to produce the same amount of power without producing more NOx emissions that would in turn be curtailed on CAIR-implementing state regulations.

III. BACT

On January 2, 2011, EPA began regulating GHGs under the Clean Air Act[3] and implemented a new GHG regime through BACT reviews (in SIP-authorized states or via a FIP [e.g., Texas]) which effects an output-based emission limit on GHGs. On May 21, 2013, the Texas Legislature passed House Bill 788, which directs the commission to adopt rules to authorize GHG emissions through state issued permits in order to displace the FIP with a SIP-authorized GHG permit regime.[4]

So, although the debate continues regarding EPA's technical legal approach for regulating GHGs under the Federal Clean Air Act, there can be no debating the fact that they are, in fact, regulating GHGs in a manner that effects an output-based emission standard for fossil fuel-fired power plants. Coupled with multiple NOx-based regulations, EPA's GHG regime leaves no

[2] *See* 40 C.F.R. Part 96.
[3] *See* 75 Fed. Reg. 31514 – 31608 (June 3, 2010).
[4] *See* TEX. HEALTH & SAFETY CODE § 382.05102; H. B. 788, 83rd Tex. Leg., § 2 (2013).

question that an adequate environmental regulatory basis exists to satisfy that aspect of Prop. 2 eligibility.

The most effective means to reduce the amount of CO_2 generated by a fuel-burning power plant is to use efficient generating technologies and processes to meet the plant's required power output. The equipment itself, heat recovery system generators, enhanced steam turbines, and related ancillary equipment capture and recirculate heat that would otherwise be vented to the atmosphere, which results in more electricity being produced per unit of fuel input.

In its GHG BACT Guidance Document, the EPA states, "Considering the most energy efficient technologies in the BACT analysis helps reduce the products of combustion, which includes not only GHGs but other regulated NSR pollutants (e.g. NOx, SO2, PM/PM10/PM2.5, CO etc.) Thus, it is also important to emphasize that energy efficiency should be considered in BACT determinations for all regulated NSR pollutants (not just GHGs)."[5] The fact that output-based emission reductions have been so clearly identified by the EPA as a preferred method of compliance with BACT for a wide range of pollutants should end any debate about whether a sufficient regulatory basis exists to conclude that HRSGs qualify as pollution control property.

By reducing output based emissions of GHGs in this manner, this equipment is clearly eligible for Prop. 2 consideration without the need for any further discussion of whether and to what extent existing NOx regulations independently establish that eligibility.

IV. NSPS

As previously mentioned, HRSGs also help facilities meet 40 CFR 60.44Da, which establishes standards of performance for NOx emissions for electric utility steam generating units for which construction commenced after September 18, 1978.[6]

In its Response Brief to the negative use determination appeal, the ED staff stated, "Applicants cite to NSPS Da and/or Db which contain a limit based upon the pounds of NOx per MWh generated. NSPS Da and Db regulate only a portion of the plant. Applicants argue HRSGs provide control by increasing efficiency of the entire plant. Because what is regulated by NSPS Da and Db is not the same as what Applicants state the control provided by HRSGs, there is not a sufficient nexus."[7] It appears that the ED's argument here is that HRSGs help increase efficiency and thereby reduce overall plant emissions, but the emission limits in parts Da and Db only apply to specific pieces of equipment and therefore, the HRSGs were not "used, constructed, acquired, or installed wholly or partly to meet or exceed" Da and/or Db.

A simple reading of the regulation demonstrates 1) that Da is an environmental rule; 2) that Da requires that both HRSGs and duct burners meet certain emissions limits; and 3) that the use, construction, acquisition, or installation of HRSGs will help an applicant meet these rules. The fact that the Applicant argues that HRSGs help increase the efficiency of the whole plant has

---

[5] EPA, *PSD and Title V Permitting Guidance for Greenhouse Gases*, p. 21 (March 2011).

[6] 40 C.F.R. 60.40Da. It should be noted that the applicable emission limits vary depending on the year the facility was constructed.

[7] Executive Director's Response to the Appeals Filed on the Negative Use Determinations for the Heat Recovery Steam Generator Applications ("Executive Director Response Brief"), October 4, 2012, p. 11.

absolutely nothing to do with the fact that the HRSGs acquired and installed at its facility help Applicant to comply with part Da.

The ED has already conceded that 40 CFR Part 60, Subpart KKKK includes an output-based emission limit on NOx that applies to an entire power plant.[8] Rather than taking the logical step of acknowledging that HRSGs assist and, in fact, are essential to achieving the Subpart KKKK emission limit, the ED makes a seemingly illogical leap to the conclusion that Subpart KKKK cannot be the qualifying environmental regulation because that Subpart would not apply until "after an applicant affirmatively decides to build a combined cycle plant."[9] Whatever that statement is intended to convey, it does not accurately reflect the regulatory framework.

The "Applicability" section of 40 CFR Part 60, Subpart KKKK states "if you are the owner or operator of a stationary combustion turbines with a heat input at peak load equal to or greater than 10.7 gigajoules (10 MMBtu) per hour, based on the higher heating value of the fuel, which commenced construction, modification, or reconstruction after February 18, 2005," your turbine is subject to this subpart."[10] So, it is clear that this regulation applies to "stationary combustion turbines" without reference to what type of equipment is installed in conjunction with those turbines.

V. Conclusion

Therefore, the CAIR Program, 40 CFR Part 60, Subpart Da, and 40 CFR Part 60, Subpart KKKK clearly and unambiguously create NOx emission limits that HRSGs are "used, constructed, acquired, or installed wholly or partly to meet or exceed." The bottom line is that NOx emission limits exist and HRSGs help to meet or exceed those limits. Furthermore, a combined-cycle power plant using HRSGs is an example of efficient generating technologies and processes used to meet the plant's required power output, which is necessary to meet GHG BACT requirements now and will be critical to meet GHG NSPS requirements, once finalized.

[8] *Id.* at 12.
[9] *Id.*
[10] 40 CFR §60.4305.

Attachment B

ATTACHMENT B

Flaws with the Interpretation and Application of the CAP Reflected in the ED Staff's NOD

I. Structural Flaws in the CAP, as Interpreted in the NOD

During the Commissioner Agenda Meeting, in a discussion with Minor Hibbs regarding the flaws of the current CAP, Chairman Shaw noted that "My thought is you use those same processes, ***it's just that for the purpose of those items listed in (k) you consider energy efficiency in that methodology.***" Unfortunately, the interpretation of the CAP reflected in the staff's NOD does not account for the energy efficiency benefits provided by HRSGs and ESTs in the CAP and has, in fact, guaranteed that this equipment will receive a negative use determination. What follows is the documentation of how the ED staff's interpretations of the CAP always generate a negative use determination for this equipment.

The CAP as interpreted by ED staff and set forth in the NOD, is best suited to measure the positive use determination percentage generated as a consequence of an upgrade or modification to production facilities that generate pollution control benefits as a consequence of such a modification. Colorado Bend was not replacing an older, traditional steam-fired boiler with a more efficient combined-cycle unit. Rather, the Colorado Bend Facility, inclusive of its HRSGs, was designed and installed as a greenfield power generation facility. As a result, the CAP Model presented in the NOD does not generate a use determination percentage that accurately reflects the pollution prevention benefit of HRSGs and ESTs.

II. Application of the ED's Prescribed CAP Model Demonstrates Significant Deficiencies and Does Not Comply with Commission's Instructions

Although Colorado Bend does not agree with the regulatory interpretations reflected in the CAP instructions provided in the NOD, in an effort to fully comply with the ED staff request, Colorado Bend has applied the CAP as prescribed in the NOD (see Table 1 below). Use of this model results in a use determination of ***-576.28 percent***, which demonstrates why the staff's interpretations are flawed and do not comport with legislative directives set out in 11.31.

ATTACHMENT B

Table 1: Results of CAP Model Using TCEQ Variable Assumptions

	TCEQ CAP Model Variable Assumption	TCEQ CAP Model Inputs	TCEQ CAP Model Output
1	**Production Capacity Factor (PCF):** Calculated by dividing the capacity of the existing equipment or process by the capacity of the new equipment or process.	PCF = 0; undefined Capacity of Existing Equipment = 0 Capacity of New Equipment/Process = 220	-
2	**Capital Cost New (CCN):** Cost of HRSGs ONLY	CCN = $ 50,570,466	-
3	**Capital Cost Old (CCN):** Cost of a boiler(s) required to produce the same amount of steam produced by the HRSGs.	CCO = $ 55,679.686	-
4	**Net Present Value of the Marketable Product (NPVMP):** The net present value of the marketable product recovered for the expected lifetime of the property, calculated using the equation in §17.17(c)(2) 1. If steam is used to generate electricity that is sold to external parties or used on site, then the value of the marketable product is considered the value of electricity sold or used on site as a result of the steam generated by the HRSG. For 1 above, the thermal power of steam generated by the facility is converted into electrical power. Using steam tables and basic thermodynamic equations, the thermal power of the steam can be determined.	Substituted actual steam turbine net generation in MegaWatt-Hours for the 2005-2007 period[1]	N/A
5	**Production Cost (PC):** Itemized costs directly attributed to the operation of the HRSG excluding non-cash costs, such as overhead and depreciation and excluding costs related to operating the gas turbine, associated duct burners, or the steam turbine including fuel costs.	HRSG-Only O&M: $827,508 (NOTE: No Fuel Costs Included)	-
6	**Interest Rate:**	10%; Use in current CAP Model	Assumed
7	**n:** Estimated Useful Life in years of the HRSG	Use 20 year useful life, Assumed	Assumed
8	**ALL Assumptions Above**	All	-576.28%

One of the major reasons the ED staff's interpretation of the CAP drives an absurd negative percentage is the over-emphasis on income in the calculation, which is direct conflict with comments made by Commissioner Baker at the December 5, 2012 Agenda when he stated:

> *In this letter from the author that says specifically that "3732....[was not intended] to prevent electric-generating facilities from receiving exemptions for equipment simply because they also derive profit from any given piece of equipment or process." It basically says if it reduces pollution it qualifies. And so, I have a really hard time sort of ignoring what the will of the author, who seems to be very clear in sort of what he was thinking when the Bill was written and passed, and sort of just setting that aside because of the economic benefit gain from the installation of a HRSG.*

The fact that, in large part, the staff's interpretation of the CAP uses production value as a means to drive down the use determination percentage also runs afoul of the stated expectations of Commissioner Rubenstein when he stated at the December 5 Agenda:

> *I don't disagree that there's great production value in having the HRSGs there. None. Nobody disputes that. But, I also don't think it's appropriate to discount the fact that that efficiency ends up in emission avoidance, and . . . we've touted the improvements in air quality that we've made because we're targeting the emissions, in large respects the increased efficiencies because of the regulations that we have also let us get there, and so we can't like it here and not like it over on this end.*

There is no doubt that the Commissioners' directive was for the ED to provide a method for calculating use determinations that accounts for and encourages the prevention of pollution through efficient process and design features. Unfortunately, the interpretations of the CAP reflected in the NOD fail to accomplish this end and should not be used to evaluate HRSGs and ESTs. We remain hopeful that, through the submission of responses to NODs, the regulated community will provide a more than adequate basis for the ED staff to follow a different interpretation and application of the CAP that better honors the directions and expectations of the Commissioners. Toward that end, what follows in **Attachment C** is Colorado Bend's attempt to document a more technically, legally, and practically sound approach to applying the CAP to HRSGs and ESTs.

Attachment C

Solution to CAP Issue and Statutory Compliance

While the CAP, as prescribed by the ED staff, should not be used to evaluated HRSGs and ESTs, an interpretation of the CAP that utilizes the same basic form as that prescribed by the ED staff, but which better incorporates accurate measures of costs and revenues for each variable. Colorado Bend has worked closely with other pending Prop. 2 applicants to develop a consistent set of measures in order to make the ED staff's job in evaluating each submission much more efficient and productive. We hope that what results is the agreement by staff that the clarified CAP approach set out below can serve as a useful tool in calculating the appropriate use determination for the pending applications.

Proposed Models and Resulting Use Determinations

I. Summary of Models Used to Calculate Use Determinations

As discussed in **Attachment B**, Colorado Bend has run the numbers using ED's prescribed CAP Model and calculated a use determination percentage of -576.28 percent. The arbitrarily low use determinations that result when applying this model demonstrate that it cannot be relied upon as an accurate measure of the pollution control benefits provided by HRSGs and ESTs. Therefore, Colorado Bend has interpreted and applied the CAP in a way that much more accurately accounts for the pollution control benefits provided by HRSGs and ESTs while still using the staff's preferred tool for deriving positive use determinations. Without waiving any right to contest the Commission's use of the CAP for these types of applications, we are confident that, for purposes of resolving the pending applications for HRSGs and ESTs, the refined CAP model set out below will serve the Commission very well.

Under this refined CAP Model set out below, Colorado Bend has prepared two scenarios – one in which the Capital Cost Old ("CCO") is assumed to equal zero and one in which the CCO is assumed to be the cost of a "flue gas ducting spacer" or "spool piece" which would be located in place of the HRSGs and associated equipment if the HRSGs and associated equipment were eliminated from the facility's design (i.e. if the heat was simply vented).

II. Refined CAP Model

Colorado Bend has chosen to first prepare a CAP Model utilizing the form in the NOD, and then to incorporate within this CAP Model the most accurate cost and revenue assumptions for each of this model's variables, when those proposed by the TCEQ within the NOD do not represent these values.

Colorado Bend has prepared two CAP Model scenarios:

- Scenario (1) in which the Capital Cost Old ("CCO") is assumed to equal zero, to reflect the greenfield design of the Facility (or, stated another way, to reflect the fact that there is no comparable equipment being replaced by the HRSGs and ESTs); and
- Scenario (2) in which CCO is assumed to be the cost of a "flue gas ducting spacer, or "spool piece", which would be in place if the Facility's HRSGs and their dedicated ancillary equipment were eliminated from the Facility design.

ATTACHMENT C

The Applicant assumptions used within these CAP Model scenarios, and a summary of the resulting use determination percentages, are presented below.

A. Clarified CAP Model Assumptions

Colorado Bend has defined certain cost and revenue variables in applying the CAP Model in a way that allows the CAP to accurately reflect the Facility's costs and revenues, and to incorporate them into a calculation that results in an accurate use determination percentage for a pollution prevention device like a HRSG.

$$\frac{(\text{Production Capacity Factor} \times \text{Capital Cost New}) - \text{Capital Cost Old} - \text{NPVMP}}{\text{Capital Cost New}} \times 100$$

Where NPVMP is defined as "the net present value of the marketable product recovered for the expected lifetime of the property, calculated using the equation in paragraph (2) of this subsection [30 TAC §17.17(c)(1)]. Typically, the most recent three-year average price of the material as sold on the open market should be used in the calculation. If the price varies from state-to-state, the application shall calculate an average and explain how the figures were determined."

Specifically, Colorado Bend has used the following assumptions regarding the variables to be used in the CAP Model presented by the TCEQ in the NOD:

- Production Capacity Factor ("PCF"): value has been assumed to equal 1.

No older, less efficient equipment was replaced by the installation of the subject equipment and the Facility was constructed from a greenfield design. Therefore, any theoretical consideration of a comparable, older design in the CAP Model would be assumed to be at the same productive capacity as the subject equipment at the Facility. Precedent exists from prior TCEQ Tier III Application filings for the use and acceptance of a PCF value of 1.

- Capital Cost New ("CCN"): value has been assumed to include the installed cost of the HRSGs and all dedicated ancillary equipment necessary to generate the marketable product assumed in this CAP Model, including the ESTs.

HRSGs alone cannot produce electricity as a fuel substitute; the HRSG works in conjunction with additional equipment to convert the heat of combustion from the Facility's Combustion Turbines ("CTs") into electricity. That additional equipment, including circulating water systems, cooling water systems, cooling towers/air cooled condensers, water treatment systems, and the ESTs, must be included in CCN. Precedent from prior TCEQ Tier I, II, and III Application filings exists for the use and acceptance of a PCF applicant-defined Historical Costs, inclusive of dedicated ancillary equipment costs.

- Capital Cost Old ("CCO"): value has been defined as zero.

As stated above, the HRSGs were not installed as a replacement of similar or comparable, less efficient equipment. Precedent exists from prior TCEQ Tier III Application filings for the use and acceptance of a CCO value of zero.

- Net Present Value of the Marketable Product ("NPVMP") includes the following assumptions:
    - Production Cost ("PC"): value has been modified to include the cost of fuel attributable to the MW output of the ESTs.

The NOD directs Colorado Bend to exclude such fuel costs. The fuel used to create the steam is a raw material used in HRSG operation. The CAP Model should not consider the Marketable Product value ("revenues") of the electricity produced by the subject equipment on one hand while excluding the fuel costs ("O&M costs") necessary to create that Marketable Product on the other. Without fuel, the HRSG cannot generate steam; without the ESTs the HRSG cannot generate electricity; and therefore, no Marketable Product would be created. Fuel costs must be included in Production Costs in any rational application of this CAP Model.

It is an oversimplification to assume all fuel costs within the Combined-Cycle system are attributable to the Facility CTs alone. Facility fuel costs to generate Marketable Product should be assumed to be incurred by: the CTs; the Facility HRSG Duct Burners; and the Facility HRSGs.

- Three-Year average inputs (2005-2007) for the following:
    - Facility Capacity Factor (%);
    - Facility Heat Rate ("UNITS");
    - Annual O&M Costs for HRSGs & Ancillary Equipment;
    - ERCOT Houston Zone electricity pricing; and
    - Katy Hub Fuel pricing.
- Annual O&M Costs included O&M costs for the following Facility systems:
    - HRSGs;
    - Circulating Water System;
    - Cooling Water System;
    - Cooling Towers/Air Cooled Condenser(s);
    - Make Up Water Treatment System; and
    - ESTs.

B. Clarified CAP Model Results

The Clarified CAP Model results in a positive use determination of 100 percent when CCO is assumed to equal "0" and 99.72 percent when CCO is assumed to equal the cost of a spool piece. **Attachment D**, entitled "Cost Analysis Procedure 'CAP' Calculations", details Colorado Bend's CAP Model assumptions and the resulting use determination percentages to be applied to facility's HRSGs and ESTs where:

- CCO = 0 and
- CCO = Cost of Spool Piece

Attachment D also provides any needed supporting documentation for the Applicant's variable assumptions used in the CAP Model to generate the resulting use determination percentages.

Table 2 below summarizes the outcomes of the two CAP Model scenarios prepared.

Table 2: Clarified CAP Model Outcomes

CAP Model Scenario	Description	Partial Use Determination %	Eligible Pollution Control Cost
Tier III – CAP Model w/ CCO = $0	HRSG & Dedicated Ancillary Systems	100%	$103,658,310
Tier III – CAP Model w/ CCO = Spool Piece	HRSG & Dedicated Ancillary Systems	99.72%	$103,370,885

Attachment D

Scenario 1:
Capital Cost Old = $0

Colorado Bend Energy Center

[illegible] CAPITAL COST OLD = $0

[illegible] CONFIDENTIAL [illegible]

DUFF & PHELPS

Taxpayer:	*Exelon Corporation*
Plant:	*Colorado Bend Energy Center (Phase I & II)*
Plant Summary:	*580.1 MW Natural Gas-Fired Combined Cycle Plant*
Plant Location:	*Wharton County, Texas*
Project:	*Cost Analysis Procedure ("CAP") Calculations*
Date:	*June 24, 2013*
Rev:	*0*

Source Legend		
		Eff. Date
C	Calculated Assumption	6/17/2013
E	Exelon Client-Provided Data	4/23/2013
KH	Katy Hub Natural Gas Pricing	6/17/2013
ERCOT	ERCOT Electricity Pricing	6/17/2013
D&P	D&P Combined Cycle Cost Database	6/17/2013
30 TAC	30 TAC Chapter 17	12/13/2010

[illegible] Assumptions

Plant Design Profile

			Source
PC Property			
PC Property Capital Cost	$	103,658,310	E
PC Property Capital Cost ($/kW)	$	471	C
PC Property Capacity (MW)		220	SNL
PC Property Net Annual Generation Capacity (kWh)		610,557,400	C
PC Property Net Annual Generation Capacity (MWh)		610,557	C
Plant Capacity Factor		31.67%	E
Plant Heat Rate (btu/kWh)		8,275	E
Plant Heat Rate (MMBTU/kWh)		0.01	C
Capital Cost Old ("CCO")			
Comparable Technology Cost	$	-	
Comparable Technology		-	
Design Capacity Factor		0%	
Capacity ("MW")		-	

Conversion Factors

Hours/Year	8,760
kW/MW	1,000
lb/kg	2.20
s/hour	3,600
btu/mmbtu	1,000,000

Economic Assumptions

			Source
NPVMP Discount Rate		10.0%	30 TAC
NPVMP Interest Rate		10.0%	30 TAC
Periods		20	E
Fuel Cost ($/MMBTU)[1]	$	5.53	KH
PC Property Annual O&M Cost	$	2,849,849	E
ERCOT Electricity Pricing ($/MWh)[2]	$	46.71	ERCOT

[1] 3-year average Katy Hub gas pricing, 2010-2012.

[2] 3-year average daily historical electricity rates for ERCOT Houston Zone, 2010-2012

Taxpayer:	Exelon Corporation
Plant:	Colorado Bend Energy Center (Phase I & II)
Plant Summary:	520.1 MW Natural Gas-Fired Combined Cycle Plant
Plant Location:	Wharton County, Texas
Project:	Cost Analysis Procedure ("CAP") Calculations
Date:	June 24, 2013
Note:	

[illegible]

Partial Use Determination = $\frac{[(PCF \times CCN) - COO - NPVMP)]}{CCN}$

[illegible]

1. Production Capacity Factor ("PCF")
   The ratio of the capacity of the existing equipment or process to the capacity of the new equipment or process.

2. Capital Cost New ("CCN")
   CCN is the estimated total installed cost of the new equipment or process.

3. Capital Cost Old ("CCO")
   CCO is the cost to construct a comparable unit or component of a comparable process without the pollution control.
   The standards for calculating CCO are:
   a. If comparable equipment without the pollution control is sold in the market in the U.S. then use the average market price of the most recent manufacturer of technology must be used.
   b. If the conditions in variable 3.1 do not apply and the company is replacing an existing unit that already has received a positive non-attainment, the company shall use the CCO from the application for the previous use determination.
   c. If the conditions in variable 3.1 and 3.2 do not apply and the company is replacing an existing unit then the company shall convert the original cost of the unit to today's dollars by using a published industry specific standard. If the production capacity of the new equipment or process is lower than the production capacity of the old equipment or process CCO is divided by the PCF to adjust CCO to reflect the same capacity as CCN.
   d. If the conditions in variables 3.1, 3.2, and 3.3 do not apply, and the company can provide an estimate to manufacture the alternative equipment without the pollution control feature, then an average estimated cost to manufacture the unit must be used. The comparable unit must be the most recent generation of technology. A copy of the estimate must be provided with the workpaper including the unit number of the manufacturer.

4. Marketable Product ("MP")
   Ancillary products or recovered using pollution control property that is sold as a product, is accumulated for later use, or is used as raw material in a manufacturing process. Marketable product includes, but is not limited to, recycling recovered or produced using the pollution control property sold, traded, accumulated for later use, or used in a manufacturing process (including at a different facility). Marketable product does not include any emission credits or emission allowances that result from installation of the pollution control property.

5. Marketable Product Value ("MPV")
   The marketable product value may be calculated in one of two ways:
   a. The sales value of the product produced by the equipment for one year periods. Typically, the most recent three-year average price of the material as sold on the market should be used in the calculation. If the price varies from state-to-state, the applicant shall calculate an average and explain how the figures were determined.
   b. If the material is used as an intermediate material in a production process, then the value assigned to the material for internal accounting purposes may be used. It is the responsibility of the applicant to show that the internally assigned value is comparable to the value assigned by other similar producers of the product.

6. Direct Costs of Production ("DCP")
   The costs directly attributed to the production of the product, including raw materials, supplies, transportation, and personnel. Not including non-operating costs, such as overhead and depreciation.

7. Equipment
   The normalized sale price of the equipment that is basis of adjustment for a use determination.

8. Freight
   Freight cost.

9. Installation Cost
   [illegible]

10. Title 30, Texas Administrative Code, Chapter 17

B. CAP Formulas (provided by TCEQ)

Partial Use Determination = $\frac{[(PCF \times CCN) - COO - NPVMP)]}{CCN}$

Where

Production Capacity Factor ("PCF") = $\frac{\text{Production Capacity of Existing Equipment or Process}}{\text{Production Capacity of New Equipment or Process}}$

And where,

NPVMP = $\sum_{n=1} \frac{MPV - PC}{(1 + \text{Interest Rate})^n}$

C. CAP Formulas for PC Property

Marketable Product Value ("MPV") = Electricity Price ($/MWh) × MWh per Year from Steam Turbine

Direct Cost of Production ("DCP") = Annual O&M ($) + Annual Fuel Cost ($)

Taxpayer:	*Exelon Corporation*
Plant:	*Colorado Bend Energy Center (Phase I & II)*
Plant Summary:	*580.1 MW Natural Gas-Fired Combined Cycle Plant*
Plant Location:	*Wharton County, Texas*
Project:	*Cost Analysis Procedure ("CAP") Calculations*
Date:	*June 24, 2013*
Rev:	*0*

II. Cost Analysis Procedure ("CAP") Calculations for Colorado Bend HRSG*

Formula: $\frac{(PCF \times CCN) - CCO - NPVMP}{CCN}$

A. Marketable Product Value ("MPV")

Electricity Price	$ / MWh	x	PC MWh / Year		=	($) MPV
$46.71	$ / MWh	x	610,557	MWh / Year	=	$20,518,499

B. Production Cost ("PC")

Heat Rate	mmbtu / kWh	x	PC kWh / Year		x	Fuel Cost	$ / mmbtu	=	Allocated Fuel Costs ($)
0.01	mmbtu / kWh	x	610,557,400	kWh / Year	x	$5.53	$ / mmbtu	=	$27,922,677

Annual O&M Cost	+	Allocated Fuel Costs	=	Annual Production Cost ($)
$2,849,649	+	$27,922,677	=	$30,772,326

Net Present Value Marketable Product ("NPVMP") Calculation

$$\sum_{t=1}^{n} \frac{(\$)\ MPV - (\$)\ PC}{(1 + \text{Interest Rate})^t} = \boxed{NPVMP\ (\$)}$$

$$\sum_{t=1}^{n} \frac{\$20,518,499 - \$30,772,326}{(1 + 10\%)^t} = -\$19,188,093 = \boxed{\$0}$$

NPVMP

* If MP is ≤ 0, then MP = 0.

Taxpayer:	*Exelon Corporation*
Plant:	*Colorado Bend Energy Center (Phase I & II)*
Plant Summary:	*590.1 MW Natural Gas-Fired Combined Cycle Plant*
Plant Location:	*Wharton County, Texas*
Project:	*Cost Analysis Procedure ("CAP") Calculations*
Date:	*June 24, 2013*
Rev:	*0*

C. Production Capacity Factor ("PCF")

$$\frac{\text{Production Capacity of Existing Equipment or Process}}{\text{Production Capacity of New Equipment or Process}} = \text{PCF}$$

$$\frac{0}{220\ \text{MW} \times 31.67\%} = \text{PCF} \quad 1.000$$

D. Capital Cost New ("CCN")
PC Property = CCN $103,658,310

E. Capital Cost Old ("CCO")
Comparable Technology = CCO $0

Partial Use Determination Calculation

$$\frac{(\text{PCF} \times \text{CCN}) - \text{CCO}}{\text{CCN}} - \text{NPVMP} = \text{Partial Use Determination \%}$$

$$\frac{1.000 \times \$103{,}658{,}310 - \$0}{\$103{,}658{,}310} - \$0 = 100.00\%$$

TCEQ Use Determination Application Section 12, use		
Use Percentage		100.00%
Estimated Dollar Value	$	103,658,310

Eligible HRSIS Cost $ 103,658,310
(Partial Use Determination % x PC Property Cost)

Electricity - PV Calculations

Difference	Period	Interest Rate	PV - Period
($2,253,826)	1	1.10000	$ (2,048,933)
($2,253,826)	2	1.21000	$ (1,862,666)
($2,253,826)	3	1.33100	$ (1,693,333)
($2,253,826)	4	1.46410	$ (1,539,394)
($2,253,826)	5	1.61051	$ (1,399,449)
($2,253,826)	6	1.77156	$ (1,272,226)
($2,253,826)	7	1.94872	$ (1,156,569)
($2,253,826)	8	2.14359	$ (1,051,427)
($2,253,826)	9	2.35795	$ (955,842)
($2,253,826)	10	2.59374	$ (868,948)
($2,253,826)	11	2.85312	$ (789,952)
($2,253,826)	12	3.13643	$ (718,138)
($2,253,826)	13	3.45227	$ (652,853)
($2,253,826)	14	3.79750	$ (593,503)
($2,253,826)	15	4.17725	$ (539,548)
($2,253,826)	16	4.59497	$ (490,498)
($2,253,826)	17	5.05447	$ (445,908)
($2,253,826)	18	5.55992	$ (405,370)
($2,253,826)	19	6.11591	$ (368,519)
($2,253,826)	20	6.72750	$ (336,017)
NPVMP:			**$ (19,166,093)**

Scenario 2:
Capital Cost Old = Spool Piece

Taxpayer:	*Exelon Corporation*
Plant:	*Colorado Bend Energy Center (Phase I & II)*
Plant Summary:	*580.1 MW Natural Gas-Fired Combined Cycle Plant*
Plant Location:	*Wharton County, Texas*
Project:	*Cost Analysis Procedure ("CAP") Calculations*
Date:	*June 24, 2013*
Rev.	*C*

Source Legend		
		Eff. Date
C	Calculated Assumption	6/17/2013
E	Exelon Client-Provided Data	4/23/2013
KH	Katy Hub Natural Gas Pricing	6/17/2013
ERCOT	ERCOT Electricity Pricing	6/17/2013
D&P	D&P Combined Cycle Cost Database	6/17/2013
30 TAC	30 TAC Chapter 17	12/13/2010

Plant Design Profile

			Source
PC Property			
PC Property Capital Cost	$	103,658,310	E
PC Property Capital Cost ($/kW)	$	471	C
PC Property Capacity (MW)		220	SNL
PC Property Net Annual Generation Capacity (kWh)		610,557,400	C
PC Property Net Annual Generation Capacity (MWh)		610,557	C
Plant Capacity Factor		31.67%	E
Plant Heat Rate (btu/kWh)		8,275	E
Plant Heat Rate (MMBTU/kWh)		0.01	C
Capital Cost Old ("CCO")			
Comparable Technology Cost	$	287,425	D&P
Comparable Technology		Spool Piece	
Design Capacity Factor		0%	
Capacity ("MW")		-	

Conversion Factors

Hours/Year	8,760
kW/MW	1,000
lb/kg	2.20
s/hour	3,600
btu/mmbtu	1,000,000

Economic Assumptions

			Source
NPVMP Discount Rate		10.0%	30 TAC
NPVMP Interest Rate		10.0%	30 TAC
Periods		20	E
Fuel Cost ($/MMBTU)[1]	$	5.53	KH
PC Property Annual O&M Cost	$	2,849,649	E
ERCOT Electricity Pricing ($/MWh)[2]	$	46.71	ERCOT

[1] 3-year average Katy Hub gas pricing, 2010-2012.

[2] 3-year average daily historical electricity rates for ERCOT Houston Zone, 2010-2012.

Taxpayer: Exelon Corporation
Plant: Colorado Bend Energy Center (Phase I & II)
Plant Summary: 993.1 MW Natural Gas-fired Combined Cycle Plant
Plant Location: Wharton County, Texas
Project: Last Available Procedure ("LAP") Calculations
Date: June 24, 2013
Rev: 0

[illegible] Formula

$$\frac{[(PCF \times CCN) - CCO - MPJ)}{CCN}$$

- Production Capacity Factor ("PCF"):
  The ratio of the capacity of the existing equipment or process to the capacity of the new equipment or process.
- Capital Cost New ("CCN"):
  CCN is the estimated total capital cost of the new equipment or process.
- Capital Cost Old ("CCO"):
  CCO is the cost of comparable equipment or a comparable process without the pollution control.
  The standards for calculating CCO are:
  - If comparable equipment without the pollution control feature is on the market in the U.S. then use the average market price of the most recent generation or technology meet or beat.
  - If the conditions in variable 3.1 do not apply and the company is replacing an existing unit that already has received a positive non-determination, the company shall use the CCO from the application for the previous non-determination.
  - If the conditions in variable 3.1 and 3.2 do not apply and the company is replacing an existing unit, then the company shall estimate the original cost of the unit today using a published industry specific standard. If the production capacity of the new equipment or process is lower than the production capacity of the old equipment or process CCO is divided by the PCF to adjust CCO to reflect the same capacity as CCN.
  - If the conditions in variables 3.1, 3.2 and 3.3 do not apply, and the company can obtain an estimate to manufacture the alternative equipment without the pollution control feature, then an average estimated cost to manufacture this unit must be used. The comparable unit must be the most recent generation of technology. A copy of the estimate must be provided with the worksheet including the specific sources of the information.
- Marketable Product ("MP"):
  Finishing product or recovered using pollution control property that is sold as a product, is accumulated for later use, or is used as raw material in a manufacturing process. "Marketable product" includes, but is not limited to, finishing recovered or produced using the pollution control property sold, traded, accumulated for later use, or used in a manufacturing process (including at a different facility). Marketable product does not include any emission credits or emission allowances that result from installation of the pollution control property.
- Marketable Product Value ("MPV"):
  The marketable product value may be established in one of two ways:
  - The price value of the product recovered or the environment for one year periods. Typically, the most recent three-year average price of the recovered or used on the market should be used in the calculation. If the price varies from state-to-state, the applicant shall calculate an average, and if subject to the various state determination.
  - If the material is used in an industrial process that is not for sale, then the value assigned to the material for internal accounting purposes must be used. It is the responsibility of the applicant to show that the internally assigned value is comparable to the value assigned by other companies in the industry.
- Direct Cost of Production ("DCP"):
  The costs directly attributed to the production of the product, including raw materials, storage, transportation, and personnel. Use excluding non-cash costs, such as ~~[illegible]~~ depreciation.
- Life Period:
  The estimated useful life in years of the equipment that is being evaluated for a use determination.
- Discount:
  Prime Rate.
- Interest Rate:
  IRS.
- Tax Life Factor Recommendation Code: Chapter 17

(i) CAP Formulas (provided by TCEQ)

Partial Use Determination = $\frac{[(PCF \times CCN) - CCO - NPVMP)}{CCN}$

Where

Production Capacity Factor ("PCF") = $\frac{\text{Production Capacity of Existing Equipment or Process}}{\text{Production Capacity of New Equipment or Process}}$

And where,

NPVMP = $\sum_{n=1}^{n} \frac{MPV - PC}{(1 + \text{Interest Rate})^n}$

(ii) CAP Formulas for PC Property

Marketable Product Value ("MPV") = Electricity Price ($/MWh) x MWh per Year from Steam Turbine

Direct Cost of Production ("DCP") = Annual O&M ($) + Annual Fuel Cost ($)

Taxpayer:	*Exelon Corporation*
Plant:	*Colorado Bend Energy Center (Phase I & II)*
Plant Summary:	*550.1 MW Natural Gas-Fired Combined Cycle Plant*
Plant Location:	*Wharton County, Texas*
Project:	*Cost Analysis Procedure ("CAP") Calculations*
Date:	*June 24, 2013*
Rev:	*0*

B. Cost Analysis Procedure ("CAP") Calculations for Colorado Bend HRSG

Formula: $\frac{(PCF \times CCN) - CCO - NPVMP}{CCN}$

A. MarRetable Product Value ("MPV")

Electricity Price			PC MWh / Year		($) MPV
$46.71	$/MWh	x	616,557	MWh/Year =	$28,518,409

B. Production Cost ("PC")

Heat Rate			PC kWh / Year		Fuel Cost		Allocated Fuel Costs ($)
0.01	mmbtu/kWh	x	810,557,400	kWh/Year x	$5.53	$/mmbtu =	$27,922,677

Annual O&M Cost		Allocated Fuel Costs		Annual Production Cost ($)
$2,849,649	+	$27,922,677	=	$30,772,326

Net Present Value Marketable Product ("NPVMP") Calculation

$$\sum_{t=1}^{n} \frac{(\$)\ MPV - (\$)\ PC}{(1 + Interest\ Rate)^t}$$

t=1	$28,518,409	- $30,772,326	= -$19,180,093	=	NPVMP ($)
t=2	$28,518,409	- $30,772,326		=	NPVMP
	(1 + 10%)^t				$0

* If MP is ≤ 0, then MP = 0

-- CONFIDENTIAL --

Taxpayer:	Exelon Corporation
Plant:	Colorado Bend Energy Center (Phase I & II)
Plant Summary:	550.1 MW Natural Gas-Fired Combined Cycle Plant
Plant Location:	Wharton County, Texas
Project:	Cost Analysis Positions ("CAP") Calculations
Date:	June 24, 2013
Rev.	0

C. Production Capacity Factor ("PCF")

Production Capacity of Existing Equipment or Process / Production Capacity of New Equipment or Process	=	PCF
0 / 220 MW * 31 (7%	=	PCF 1.000

D. Capital Cost New ("CCN")
PC Property

	=	CCN $103,658,310

E. Capital Cost Old ("CCO")
Comparable Technology

	=	CCO $287,425

Partial Use Determination Calculation

$$\frac{(PCF \times CCN) - CCO}{CCN} - NPVMP = \text{Partial Use Determination \%}$$

$$\frac{1.000 \times \$103,658,310 - \$287,425}{\$103,658,310} - \$0 = 99.72\%$$

IGEL Use Determination Application Section 12, Use
Use Percentage 99.72%
Estimated Dollar Value $ 103,658,310

Eligible IRS Cost $
(Partial Use Determination % x PC Property Cost)

Electricity - PV Calculations

Difference	Period	Interest Rate	PV - Period	
($2,253,826)	1	1.10000	$	(2,048,933)
($2,253,826)	2	1.21000	$	(1,862,666)
($2,253,826)	3	1.33100	$	(1,693,333)
($2,253,826)	4	1.46410	$	(1,539,394)
($2,253,826)	5	1.61051	$	(1,399,449)
($2,253,826)	6	1.77156	$	(1,272,226)
($2,253,826)	7	1.94872	$	(1,156,569)
($2,253,826)	8	2.14359	$	(1,051,427)
($2,253,826)	9	2.35795	$	(955,842)
($2,253,826)	10	2.59374	$	(868,948)
($2,253,826)	11	2.85312	$	(789,952)
($2,253,826)	12	3.13843	$	(718,138)
($2,253,826)	13	3.45227	$	(652,853)
($2,253,826)	14	3.79750	$	(593,503)
($2,253,826)	15	4.17725	$	(539,548)
($2,253,826)	16	4.59497	$	(490,498)
($2,253,826)	17	5.05447	$	(445,908)
($2,253,826)	18	5.55992	$	(405,370)
($2,253,826)	19	6.11591	$	(368,518)
($2,253,826)	20	6.72750	$	(335,017)
NPVMP:			**$**	**(19,188,093)**

Attachment E

CER-Colorado Bend Energy LLC

Consultant: Greg Maxim, Duff & Phelps

Plant: Colorado Bend Facility

Issue 1: Please review the enclosed application to ensure that all information is still current.

Response: This response to the NOD provides additional information in support of Colorado Bend's original application. With the addition of the supplemental information provided in this response, the application is current.

Issue 2: Specify the subsections of 40 Code of Federal Regulations ("CFR") §60 Subparts Da and Db being met as a result of the installation and use of the heat recovery steam generators ("HRSG") and explain how the HRSG use causes the facility to meet or exceed those requirements.

Response: Please refer to Attachment A.

Issue 3: Title 30 Texas Administrative Code ("TAC") §106.512(7) states, "Upon issuance of a standard permit for electric generating units, registrations under this section for engines or turbines used to generate electricity will no longer be accepted, except for: (A) engines or turbines used to provide power for the operation of facilities registered under the Air Quality Standard Permit for Concrete Batch Plants; (B) engines or turbines satisfying the conditions for facilities permitted by rule under Subchapter E of this title (relating to Aggregate and Pavement); or (C) engines or turbines used exclusively to provide power to electric pumps used for irrigating crops." Because none of these exceptions apply to the equipment and a standard permit for electric generating units has been issued, the citation of 30 TAC §106.512 does not appear to be appropriate. If you contend this citation still applies, please explain.

Response: Please refer to Attachment A.

Issue 4: In addition to the proposed calculation included in your application, please use the cost analysis procedure ("CAP") contained in 30 TAC §17.17 to calculate a proposed use determination percentage.

$$\frac{(\text{Production Capacity Factor} \times \text{Capital Cost New}) - \text{Capital Cost Old} - \text{NPVMP}}{\text{Capital Cost New}} \times 100$$

The variables used in the CAP should be calculated as follows:

- Production Capacity Factor: calculated by dividing the capacity of the existing equipment or process by the capacity of the new equipment or process.
- Capital Cost New: Cost of HRSGs.
- Capital Cost Old: Cost of a boiler(s) required to produce the same amount of steam produced by the HRSGs.
- Net Present Value of the Marketable Product: The net present value of the marketable product recovered for the expected lifetime of the property, calculated using the equation in §17.17(c)(2).

$$NPVMP = \sum_{t=1}^{n} \frac{(\text{Marketable Product Value-Production Cost})_t}{(1 + \text{Interest Rate})^t}$$

- Marketable Product:

1. If steam is used to generate electricity that is sold to external parties or used on site, then the value of the marketable product is considered the value of electricity sold or used on site as a result of the steam generated by the HRSG.
2. If steam is sold to an external party, then the value of the marketable product is the retail value of the steam sold.
3. If steam is used on site, then the value of the marketable product is the value assigned to the steam for internal accounting purposes. It is the responsibility of the applicant to show that the internally assigned value is comparable to the value assigned by other similar producers of steam.

For 1 above, the thermal power of steam generated by the facility is converted into electrical power. Using steam tables and basic thermodynamic equations, the thermal power of the steam can be determined by the following calculation.

$W_{thermal}=(h_1-h_0)\times m$

Where h_0 is the initial specific enthalpy of the liquid (the HRSG feedwater) and h_1 is the final specific enthalpy of the steam at a given temperature and pressure exiting the HRSG. m is the mass flow rate of the steam. Use the steam tables to determine the specific enthalpy of the steam based on the required specifications (temperature and pressure) of the steam produced.

To determine the electrical power represented by $W_{thermal}$, $W_{thermal}$ must be converted to electrical power using the thermal efficiency ($\eta_{thermal}$) of the steam turbine(s). You may either use the rated efficiency of the actual steam turbine at the facility or assume $\eta_{thermal}$ of 36%, which is an average steam turbine thermal efficiency for non-nuclear applications.

$W_{electrical}= W_{thermal} \times \eta_{thermal}$

$W_{electrical}$ represents the electrical power generation associated with the HRSG. In order to determine the marketable product value, multiply the electrical power generated by the number of hours the HRSG operated in each of the last three years while the electricity was being generated for sale or use on site. This value should then be multiplied by the average retail rate of electricity sold during each of the last three years in order to determine the marketable product value of the steam used to generate electricity sold to external parties or used on site for the last three years. The marketable product values for the last three years should be added and the sum divided by three to obtain the average marketable product value over the last three years.

- Production Cost: Itemized costs directly attributed to the operation of the HRSG excluding non-cash costs, such as overhead and depreciation and excluding costs related to operating the gas turbine, associated duct burners, or the steam turbine including fuel costs.
- Interest Rate: 10%
- n: estimated useful life in years of the HRSG

Response: Please refer to Attachment B for a discussion regarding the flaws in CAP as prescribed by the ED staff. Also, please refer to Attachment C for a discussion regarding the use determination models developed by Colorado Bend and the pollution control percentages.

Issue 5: Under the administrative rules in place at the time of this application was filed the applicant could propose the method of calculating a use determination percentage for a HRSG. Please be advised that the proposed calculation has errors. If you wish to proceed with the calculation, provide supporting documentation for all variables used in the calculation, excluding the standard unit conversion factors.

The proposed method utilized an "avoided emissions" approach, whereby, you compared the thermal output of a combined cycle facility and a simple cycle facility. Please explain how such a comparison is appropriate, and how you developed your "baseline emission rate." Because this application is for HRSGs, NOx emission reductions attributable to equipment other than the HRSGs should not be considered. Likewise, the cost of equipment other than the HRSGs should not be included in the Capital Cost of NOx avoidance or percent exempt calculations. Please resubmit the Thermal Efficiency Calculation with the "% of NOx reduction" applied only to the value of the HRSGs. The percentage NOx emissions reduction attributable to the application equipment is more accurately calculated as (Output Baseline – Output Subject) / Output Baseline.

Response: Please refer to Attachment C.

JACKSON WALKER L.L.P.
ATTORNEYS & COUNSELORS

Michael J. Nasi
(512) 236-2216 (Direct Dial)
(512) 391-2194 (Direct Fax)
mnasi@jw.com

March 7, 2014

Via Email and Hand Delivery

Mr. Ron Hatlett
TCEQ Tax Relief for Pollution Control Property Program
MC 110
12100 Park 35 Circle, Building F, 4th Floor
Austin, Texas 78711-3087

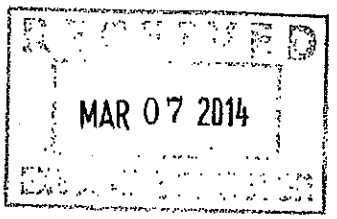

Re: Response to Notice of Technical Deficiency
CER-Colorado Bend Energy LLC (formerly Navasota Wharton Energy Partners LP)
Colorado Bend Facility, Wharton, Wharton County
Regulated Entity No. RN104772538
Customer No.: CN603806928
Application No. 11926

Dear Mr. Hatlett:

On January 24, 2014, the Executive Director ("ED") of the Texas Commission on Environmental Quality ("TCEQ") issued a Notice of Technical Deficiency ("NOD") to CER-Colorado Bend Energy LLC ("Colorado Bend" or "Applicant") regarding its application for a use determination for the heat recovery steam generators ("HRSGs") and enhanced steam turbines ("ESTs") located at its Colorado Bend Facility. Colorado Bend is hereby providing the requested information in support of its original application. With the addition of the supplemental information provided in this response, the application is current.

Introduction

In the discussion that follows, Applicant provides a full response to the Executive Director's request for additional information while explaining how many of those requests reflect an interpretation that contradicts the letter and intent of the controlling provisions of the Texas Tax Code. As Applicant has consistently stated in prior filings and meetings, much work has been done to develop a consensus position among the group of current HRSG and EST applicants to provide the Executive Director with the tools and the technical support it needs to generate positive use determinations that comport with the Texas Tax Code and existing commission regulations.

Specifically, the Avoided Emissions and Clarified CAP Models that have been provided are the fruit of months of technical collaboration among applicants and reflect a significant compromise given the fact that several competitor power plants are not paying any property tax on HRSGs due to 100% positive use determinations previously issued by the Commission. Thanks to this

collaboration and compromise, the Executive Director has been given a clear path forward that can bring this almost 7-year old process to completion and, by so doing, establish a framework for handling future applications as energy efficiency, generally, and HRSGs and ESTs, in particular, continue to be central components of pollution control strategies within the electric power industry and beyond. While the Applicant appreciates the difficult task the Executive Director has in working through these applications, we respectfully request that the long-overdue use determinations be finalized as soon as possible and we trust that the legal and technical information provided below will help expedite that process.

Issue 1 – Texas Tax Code § 11.31(k) and (m)

A. The statutory definition of "facility, device, or method for the control of air, water, or land pollution" states that such property is used "*to meet or exceed rules or regulations* adopted by any environmental protection agency."

As noted in its NOD, the ED interprets Texas Tax Code §§ 11.31(k) and (m) as "establishing an expedited review process and exempting an applicant from providing detailed information regarding the anticipated environmental benefit for property on the k-list." However, the ED goes on to say that "[b]ecause Article VIII, Section 1-l, of the state constitution authorizes the exemption only for property used to meet or exceed an environmental rule, the Executive Director does not interpret Texas Tax Code § 11.31 subsection (m) as exempting §11.31(k)-listed property from the TCEQ's review standards at Title 30 Texas Administrative Code (TAC) Chapter 17 or mandating the issuance of a positive use determination, when the property is not used, constructed, acquired or installed to meet or exceed an environmental rule."

Section 11.31(a) provides that "A person is entitled to an exemption from taxation of all or part of real and personal property that the person owns and that is used wholly or partly as a facility, device, or method for the control of air, water, or land pollution." Under this provision, if the property is used for the control of air, water of land pollution, it is eligible to receive a tax exemption.

The ED accurately notes that in addition to being property used for the control of air, water, or land pollution, that the property must also be used to meet or exceed an environmental regulation. What the ED refuses to recognize is that when the Legislature amended § 11.31 in 2007, by adding §11.31(k), the Legislature specifically defined the equipment listed in §11.31(k) as "facilities, devices, or methods for the control of air, water or land pollution." This is not just some generic description, but mirrors the defined terms used in §§11.31(a) and (b) and specifically satisfies the requirement to meet or exceed an environmental regulation.

The term "facility, device, or method for the control of air, water, or land pollution" is defined in §11.31(b) as:

> land that is acquired after January 1, 1994, or any structure, building, installation, excavation, machinery, equipment, or device, and any attachment or addition to or reconstruction, replacement, or improvement of that property, that is used, constructed, acquired, or installed wholly or partly to meet or exceed rules or regulations adopted by any environmental protection agency of the United States,

> this state, or a political subdivision of this state for the prevention, monitoring, control, or reduction of air, water, or land pollution.

Therefore, if equipment is considered a facility, device, or method "for the control of air, water, or land pollution" then, ***by definition***, it is used "to meet or exceed rules or regulations adopted by an environmental protection agency for the prevention, monitoring, control, or reduction of air, water, or land pollution." There is no other way it can be interpreted. The fact that the Legislature specifically chose to define the items listed in 11.31(k) as "facilities, devices, or methods for the control of air, water, or land pollution" demonstrates that the Legislature had already determined that these items satisfy the requirement to meet or exceed an environmental regulation. Because the Legislature chose to describe this equipment using a statutorily defined term, that definition must be applied and the property must be considered to "meet or exceed rules or regulations adopted by any environmental protection agency . . . for the prevention, monitoring, control, or reduction of air, water, or land pollution." The ED cannot simply choose to ignore this statutory definition.

Thus, when the Legislature states that heat recovery steam generators ("HRSGs") and enhanced steam turbines ("ESTs") are "facilities devices, or methods for the control of air, water, or land pollution," the ED must treat them as that term is defined and recognize that they are used to meet or exceed an environmental regulation. If the ED continues to argue that there is no environmental regulation that HRSGs and ESTs meet or exceed, then the ED is willfully ignoring the statutory language. The ED has no such authority.

Finally, it is worth reiterating Chairman Shaw's comments during the December 5, 2012 Agenda, in which he articulated the argument that equipment listed in § 11.31(k) are not required to provide an environmental citation based on the statutory language:

> I can understand how one might read that subsections (m) and (k) and say well we don't really have to cite the rules and regulations that are met or exceeded because of this because the legislature said the ED is going to determine that this, they shall determine that this is pollution control equipment, it's just a matter of determining what proportion of that is. And so I think at a minimum, it's problematic to suggest that negative use determination should be made because they failed to cite an applicable rule in light of that. I think that, it makes it difficult to square that with what the legislature was intending whenever they included that in the rule or in their legislation.

The order issued by the Commission remanded the applications back to the ED and allowed the ED to issue NODs to seek further information from the applicants, including information regarding environmental citations. However, the fact that the ED has the ability to request further information regarding environmental citations cannot be viewed as an opportunity to ignore the statutory definition of a "facility, device, or method for the control of air, water, or land pollution."

B. ED's Reliance on Intent Is Misplaced

It has also become evident that the ED is reading an element of intent into the statute where none exists. The ED's position with regard to HRSGs and ESTs is that the applicants did not install this equipment for the environmental benefit it achieves, but for the additional electricity that this equipment can help generate. The position that the intent of the applicant governs whether the equipment is eligible for a tax exemption could be derived from one of two places: 1) Article VIII, Section 1-l of the state constitution, which requires that eligible equipment must meet or exceed an environmental rule or regulation; or 2) Tax Code § 11.31(g)(3), which requires the Commission's rules to "allow for determinations that distinguish the proportion of property that is used to control, monitor, prevent, or reduce pollution from the proportion of property that is used to produce goods or services."

However, there is no provision in the statutory language that directs TCEQ to consider the property owner's intent when it installed the equipment in question. The fact that the equipment may also provide some production value is of no consequence as to whether the equipment is ***eligible*** for a positive use determination.

If the ED believes that they must consider the intent of the applicant based on the "meet or exceed" language, it is clear this requirement has been satisfied through the statutory definition of "facility, device, or method for the control of air, water, or land pollution." When the Legislature applied this defined term to the equipment listed in 11.31(k), any concern about the intent of the applicant was rendered moot.

We have previously cited to the letter from Rep. Rick Hardcastle, the author of HB 3732, which specifically states:

> pollution control benefits can be derived from the manner in which fuel is prepared and used, and from increasing the efficiency of certain facilities. By doing so, the amount of fuel needed and the total amount of pollution emitted can be reduced. I did not intend, nor do I support, an interpretation of anything in HB 3732 to prevent electric generating facilities from receiving exemptions for equipment simply because they also derive profit from a given piece of equipment or process. If it reduces pollution, it qualifies. (emphasis added).[1]

Furthermore, during the December 5, 2012 Agenda, Commissioner Baker noted:

> ...In this letter from the author that says specifically that "3732....[was not intended] to prevent electric-generating facilities from receiving exemptions for equipment simply because they also derive profit from any given piece of equipment or process." It basically says if it reduces pollution it qualifies. And so, I have a really hard time sort of ignoring what the will of the author, who seems to be very clear in sort of what he was thinking when the bill was written

[1] Letter from Rep. Rick Hardcastle to Grace Montgomery, Deputy Director of Administrative Services at the TCEQ, August 1, 2007 (emphasis added).

and passed, and sort of just setting that aside because of the economic benefit gain from the installation of a HRSG.

The ED's position regarding the applicant's intent could be based on a misinterpretation of 11.31(c)(3) which directs applicants to provide, among other things, "the purpose of the installation of such facility, device, or method, and the proportion of the installation that is pollution control property." Here the applicant must describe the operational purpose of the equipment, but the ED's job is to make an objective evaluation of the percentage of the equipment that serves a pollution control function and the percentage of the equipment that serves a productive function. This language does not provide the ED with authority to determine the eligibility of the equipment for a tax exemption based on the applicant's intent in installing such equipment.

Whatever the ED's view is of what ***should be*** considered in evaluating these applications cannot take precedence over what is ***required*** by the statute. Nowhere does the statute state that the ED should consider the intent of the applicant in installing the equipment; instead, the ED must make a matter of fact assessment – "If it reduces pollution, it qualifies."

Issue 2 - Review of Environmental Rule Citations

While Colorado Bend does not agree that an environmental citation is required for those items listed in § 11.31(k), in an effort to comply with the ED's request, we have provided a number of environmental citations that are exceeded by the installation of the HRSGs and ESTs. The ED considers each of the listed citations to be insufficient "to establish a clear connection between the listed equipment and the cited rules." The ED requests that we "provide an explanation of how the equipment is used to meet a requirement in the [cited] rule."

Before explaining how the HRSGs and ESTs provide reductions in nitrogen oxide ("NO_x") emissions, it is worth noting that the ED's request that Applicant provide an explanation of how equipment is used to meet a requirement of the cited rule substantively differs from the statutory requirement that the equipment meets or exceeds an environmental rule. The Commission has previously recognized that "[t]he term 'exceed' is interpreted to include voluntary projects which go beyond the minimum requirements of environmental laws, rules, or regulations, provided that the projects are initiated pursuant to or in compliance with an adopted or enacted law, rule, or regulation."[2] Thus, even if an environmental rule does not specifically call for the installation of a HRSG, if a HRSG assists in reducing pollution beyond the minimum requirements of that rule, then it exceeds the environmental rule and is eligible for a positive use determination.

Furthermore, an environmental rule regarding NO_x emissions can be exceeded not only by achieving greater emissions reductions than is required by the rule, but also by proactively complying with or exceeding the requirements of an adopted or enacted rule that the facility will have to comply with in the future. Even if the facility is not yet required to comply with a particular rule, if an applicant voluntarily complies with or exceeds the requirements of an adopted or enacted rule, then it meets the statutory requirements as well as the Commission's stated position of what it means to exceed a rule.

[2] 19 Tex. Reg. 7737, 7793 (Sept. 30, 1994).

A. NSPS

One of the reasons that the interpretation of the term "exceeds" is so important with regard to HRSGs and ESTs, is that the applicability of the EPA's New Source Performance Standards ("NSPS") for steam generating units and combustion turbines is based on the heat input for a particular facility and the timeframe in which it was constructed or modified. For example, a gas turbine with a heat input at peak load that is greater than 10 MMBtu per hour, which was constructed after February 18, 2005 is subject to the requirements in 40 CFR 60, Subpart KKKK ("NSPS KKKK"). On the other hand, if the exact same type of plant particular plant was constructed in 2004, the gas turbine would be subject to 40 CFR 60, Subpart GG ("NSPS GG") and any associated HRSGs which use duct burners would be subject to either 40 CFR 60 Subpart Da ("NSPS Da") or 40 CFR 60, Subpart Db ("NSPS Db"). The only difference between the two plants is the time in which it was constructed. However, the environmental benefit of reduced emissions per megawatt/hr produced that is provided by the HRSGs and ESTs at both plants is the same.

Colorado Bend is subject to KKKK due to a modification at the facility which took place after February 18, 2005. Subpart KKKK applies to the emissions from the gas turbine, as well as any associated HRSGs and duct burners and specifically provides an output-based emissions limit. Output-based emissions limits are based on the amount of pollution produced per unit of useful output. Furthermore, the TCEQ recently adopted a Permit By Rule (PBR) for Natural Gas-Fired Combined Heat and Power Units.[3] In the preamble to the adoption of the Combined Heat and Power (CHP) PBR, the TCEQ states, "The Commission acknowledges the benefits and advantages of CHP as a means of providing efficient, reliable, and clean energy." As part of that PBR, TCEQ specifically provided that the emission limits for stationary natural gas engines would be measured in terms of air contaminant emissions per unit of total energy output.[4] HRSGs are recognized as a typical industrial CHP application. The fact that the TCEQ recognizes the pollution control benefits of this type of equipment in its permitting program should be given weight when evaluating the Executive Director's arguments in this case that similar equipment does not have pollution control benefits.

Curiously, the ED makes no mention of the Applicant's citation of NSPS KKKK in its NOD. We are unsure whether that is to be taken as an indication that the ED believes NSPS KKKK is a valid citation or whether the ED has already determined that NSPS KKKK is not a valid citation and is not requesting any further information related to this issue.

It is worth noting that those facilities that have not triggered NSPS KKKK because they were constructed or last modified prior to February 18, 2005 still provide the exact same environmental benefit and emission reductions that facilities constructed or modified after February 18, 2005 provide. The same environmental benefits and emissions reductions that have been recognized by the Commission.

Colorado Bend contends that it is wholly unreasonable for the Commission to treat a plant which was constructed prior to 2005 as ineligible for a pollution control tax exemption because it was

---

[3] 30 TAC §106.513; 37 Tex.Reg. 6037-6049, August 10, 2012.

[4] 30 TAC §106.513(d).

not subject to an output based emission standard, even though it provided the same emissions reductions and the same environmental benefits that the same plant built in 2005 provides. Any facility constructed prior to February 18, 2005 that employs HRSGs and ESTs meets the Commission's definition of "exceed" as it is a "voluntary project" which goes "beyond the minimum requirements of environmental laws, rues, or regulations" that is "in compliance with an adopted or enacted law, rule, or regulation [i.e., NSPS KKKK]."

The ED's position would ignore the environmental benefit that the Commission has explicitly acknowledged that these facilities provide. We find it hard to believe that the Commission would choose to provide a market incentive to some, but not all, facilities that install the exact same pollution control equipment while ignoring the environmental benefit that older facilities have been providing for a longer period of time. In a seemingly ironic twist, under the ED's current position, those facilities that have provided the greatest amount of pollution prevention are the facilities that will be left without a positive use determination.

If, however, the ED wishes to distinguish between plants that provide the exact same environmental benefit based on the date which the facility commenced construction, there are other regulatory programs that the ED has previously recognized as appropriate citations that are applicable in this matter. The Commission has previously issued positive use determinations to dozens of applicants who have cited to the Clean Air Interstate Rule ("CAIR") and the National Ambient Air Quality Standards ("NAAQS") as the environmental rule that is being met or exceeded by the use of the pollution control property. The "Tax Relief for Pollution Control Property: Technical Review Document" for applications citing to the CAIR and NAAQS regulations indicates that these applications "cites valid rules."

B. CAIR

The ED has noted that "CAIR is a cap and trade program that allocates allowances to all electric generating units. Please explain how a Heat Recovery Steam generator (HRSG) is required to meet a CAIR requirement." Under CAIR the EPA has established a model NO_x trading program, where the EPA provides emission "allowances" for NO_x to each state, according to the state budget. The states will allocate those allowances to sources (or other entities), which can trade them. As a result, sources are able to choose from many compliance alternatives, including: installing pollution control equipment; switching fuels; buying excess allowances from other sources that have reduced their emissions, or investing in energy efficient processes that reduce emissions. Through the use of a HRSG and EST, Applicant is able achieve the desired megawatt production, while limiting NO_x emissions. Without its HRSGs and ESTs, Applicant would be unable to produce the same amount of power without producing more NO_x emissions that would cause it to violate its NO_x emissions limits under CAIR.

C. NAAQS

Similarly, the ED has also dismissed NAAQS as an applicable environmental regulation. When any applicant submits an air quality permit application to the TCEQ, it must be able to demonstrate that the proposed facility will not cause or contribute to an exceedance of the NAAQS for any of the criteria pollutants, including NO_x. When Applicant was deciding what type of natural gas facility to construct, it had a certain megawatt production in mind. The

desired megawatt production could be achieved either by constructing simple cycle facilities or combined cycle facilities. Both types of facilities would have to demonstrate compliance with the NAAQS. A combined cycle facility, through the use of HRSGs, significantly reduce fuel consumption and thereby reduce total NO_x emissions. Therefore, even if both facilities could demonstrate compliance with the NAAQS, the decision to expend more capital and construct a more energy efficient combined cycle facility that reduces NO_x emissions ***exceeds*** the NAAQS requirement.

D. BACT

The ED states that its review of the construction and amendment air permit applications "did not disclose any representation of the HRSGs providing pollution control. . . It is not appropriate to revise a BACT analysis in order to justify a property tax exemption." Applicant does not disagree with the ED's assertion that HRSGs were not specifically identified as a BACT requirement in its permit applications. However, the fact that HRSGs are actually used to reduce exhaust temperature in order to operate the SCR systems, which is a BACT requirement, demonstrates that HRSGs are used to meet an environmental rule.

The ED could argue that SCR systems do not require HRSGs to reduce exhaust temperature and that other means are available to achieve the desired temperature reduction. However, such an argument would again fail to apply the appropriate statutory requirement. The statute does not require applicants to demonstrate that the equipment is required to meet a requirement of an environmental rule; it merely states that eligible property must be used to meet or exceed an environmental rule. In this case, the HRSGs are used in order to assist in meeting the BACT requirements, by cooling the exhaust prior to passing through the SCR, in order to reduce NO_x emissions.

The ED has also rejected the position that GHG BACT requirements are a sufficient regulatory citation because Applicant is not yet required to meet those regulations. The ED's position fails to recognize that an environmental rule that limits emissions can be exceeded not only by achieving greater emissions reductions than is required by the rule, but also through "voluntary projects which go beyond the minimum requirements of environmental laws, rules, or regulations, provided that the projects are initiated pursuant to or in compliance with an adopted or enacted law, rule, or regulation." Even if the facility is not yet required to comply with a particular rule, if an applicant voluntarily complies with or exceeds the requirements of an adopted or enacted rule, then it meets the statutory requirements as well as the Commission's stated position of what it means to exceed a rule.

The most effective means to reduce the amount of CO_2 generated by a fuel-burning power plant is to use efficient generating technologies and processes to meet the plant's required power output. The equipment itself, heat recovery system generators, enhanced steam turbines, and related ancillary equipment capture and recirculate heat that would otherwise be vented to the atmosphere, which results in more electricity being produced per unit of fuel input.

In its GHG BACT Guidance Document, the EPA states, "Considering the most energy efficient technologies in the BACT analysis helps reduce the products of combustion, which includes not only GHGs but other regulated NSR pollutants (e.g. NO_x, SO_2, $PM/PM_{10}/PM_{2.5}$, CO etc.). Thus,

it is also important to emphasize that energy efficiency should be considered in BACT determinations for all regulated NSR pollutants (not just GHGs)."[5] The fact that output-based emission reductions have been so clearly identified by the EPA as a preferred method of compliance with BACT for a wide range of pollutants should end any debate about whether a sufficient regulatory basis exists to conclude that HRSGs qualify as pollution control property.

By reducing output based emissions of GHGs in this manner, this equipment is clearly eligible for Prop. 2 consideration without the need for any further discussion of whether and to what extent existing NO_x regulations independently establish that eligibility.

Issue 3 – Calculation of an Appropriate Partial Positive Use Determination

A. Avoided Emissions Approach

Colorado Bend is a Tier IV applicant, and is not required to use the cost analysis procedure ("CAP") for purposes of calculating the use determination percentage for the HRSGs. The Supplemental Application uses a Tier IV Use Determination calculation that is based on a Clarified CAP approach. However, as requested by TCEQ, the Supplemental Application also includes use determination calculations based on the ED's assumptions.

Colorado Bend did not provide an Avoided Emissions Approach in its June 2013 Supplemental Application. Though it did not provide these calculations, Applicant disagrees with the ED's position that the equation in Step 5 would require a correction. The equation provided in Step 5 of the Avoided Emissions Approach is calculated as:

$$\frac{\text{Emissions Output}_{\text{Baseline Plant}} - \text{Emissions Output}_{\text{Subject Plant}}}{\text{Emissions Output}_{\text{Subject Plant}}}$$

Upon further review, for purposes of this NOD Response and the Supplemental Application, the Applicant has more accurately described the result calculated by the equation in Step 5 as the "NO_x Emissions Avoided by Subject Plant" or:

$$\frac{122.0\ \text{TPY}_{\text{Baseline Plant}} - 96.6\ \text{TPY}_{\text{Subject Plant}}}{96.6\ \text{TPY}_{\text{Subject Plant}}} = \begin{array}{l}\text{26.3\% TPY NOx Emissions Avoided} \\ \text{by Subject Plant}\end{array}$$

The term "NO_x Emissions Reduction" implies a measure from the Baseline Plant's emissions, which is consistent with the TCEQ's requested calculation change. This is not the intended measure to be calculated by the equation in Step 5.

Rather, the formula used in Step 5 relies on an "Avoided Emissions" approach described by the U.S. Environmental Protection Agency ("EPA") in its document, *"Output-Based Regulations: A Handbook for Air Regulators, 2004, p. 31."* In describing this approach, the EPA states the following:

[5] EPA, *PSD and Title V Permitting Guidance for Greenhouse Gases*, p. 21 (March 2011).

> The displaced emissions are the amount of emissions that would have otherwise have been generated to provide the same thermal output from a conventional (i.e., Baseline Plant) system.[6]

By dividing the numerator outlined in the equation in Step 5 by the Emissions Output of the Subject Plant (TPY NO_x "Avoided by the Subject Plant"), the Applicant has calculated the percentage of NO_x emissions avoided by use of the Subject Plant. Making the change requested by the ED (using Output Baseline) in the denominator would not more-accurately calculate the NO_x emissions avoidance percentage attributable to the HRSGs that are the subject of the Application.

B. CAP Calculations / CCN: Steam Turbines and Dedicated Ancillary Equipment

To clarify, only two (2) of the three (3) proposed CAP calculations presented in the Applicant's June 2013 Supplemental Application and NOD response include the cost of the steam turbine and dedicated ancillary equipment costs within CCN. In the case where we ran the CAP Model using all assumptions requested by the Executive Director in the NOD, including CCN = HRSG costs only, the CAP Model generated a result of -576.28%.

The fact that equipment which the Legislature has explicitly recognized is pollution control property and which the Commission has previously described as "a means of providing efficient, reliable, and clean energy" somehow generates a negative 500 percent use determination demonstrates how flawed the ED's CAP is.

[6] EPA, Office of Atmospheric Protection Programs, *Output-Based Regulations: A Handbook for Air Regulators*, pp. 31-33 (2004).

Table 2 on page 12 of the June 2013 NOD response summarizes this requested CAP Model's inputs and the resulting CAP Model outcome. As noted in the Table, CCN is defined as the Cost of the Facility HRSGs only. For reference, we have provided this Table again below with no changes to the version submitted in June 2013.

Table 1: Results of CAP Model Using TCEQ Variable Assumptions

	TCEQ CAP Model Variable Assumption	TCEQ CAP Model Inputs	TCEQ CAP Model Output
1	**Production Capacity Factor (PCF):** Calculated by dividing the capacity of the existing equipment or process by the capacity of the new equipment or process.	PCF = 0; undefined Capacity of Existing Equipment = 0 MW Capacity of New Equipment/Process = 220 MW	-
2	**Capital Cost New (CCN):** Cost of HRSGs ONLY	CCN = $50,570,466	-
3	**Capital Cost Old (CCO):** Cost of a boiler(s) required to produce the same amount of steam produced by the HRSGs.	CCO = $55,679,686 See developed assumption for CCO in attached model.	-
4	**Net Present Value of the Marketable Product (NPVMP):** The net present value of the marketable product recovered for the expected lifetime of theproperty, calculated using the equation in §17.17(c)(2) 1. If steam is used to generate electricity that is sold to external parties or used on site, then the value of the marketable product is considered the value of electricity sold or used on site as a result of the steam generated by the HRSG. For 1 above, the thermal power of steam generated by the facility is converted into electrical power. Using steam tables and basic thermodynamic equations, the thermal power of the steam can be determined.	Substituted actual steam turbine net generation in Megawatt-Hours for the 2005-2007 period[1]	N/A
5	**Production Cost (PC):** Itemized costs directly attributed to the operation of the HRSG excluding non-cash costs, such as overhead and depreciation and excluding costs related to operating the gas turbine, associated duct burners, or the steam turbine including fuel costs.	HRSG-Only O&M: $827,508 (NOTE: No Fuel Costs Included)	-
6	**Interest Rate:**	10%; Use in current CAP Model	Assumed
7	**n:** Estimated Useful Life in years of the HRSG	Use 20 year useful life, Assumed	Assumed
8	**ALL Assumptions Above**	All	**- 576.28%**

NOTE: (Capital Cost New = HRSG Capital Costs only in Line 2 above)

The Applicant disagrees with the ED that the steam turbine and other dedicated equipment costs included in our additional two (2) CAP Model scenarios provided in the June 2013 Supplemental Application and NOD response should be removed from the CCN. Without these Balance-of-Plant equipment installations, HRSGs would not and could not produce a byproduct or marketable product. That is, no electricity or steam could be produced, measured and sold

through the installation and use of Facility HRSGs. If required to remove the steam turbine and other dedicated equipment costs from the two additional CAP Model scenarios' CCN variable assumptions, then one should also eliminate any Marketable Product Value (revenue) estimated for any byproduct or marketable product within the CAP Model. Such revenue could not be generated by the HRSG equipment alone; this equipment must be installed within a total productive plant configuration.

As discussed in detail later in this response, the Applicant's two (2) additional CAP Model scenarios incorporate Production Cost variable assumptions that include O&M costs associated with the steam turbine and other dedicated equipment. Such equipment is essential to the HRSG's functions - both in the contribution to pollution control and production output - and, therefore, such O&M costs should be included in the Production Cost and Net Present Value of Marketable Product ("NPVMP") calculations within these CAP Model alternatives.

C. CAP Calculations / CCO: CCO = Zero or CCO = Ductwork/Spool Piece

30 TAC §17.2(2) provide a definition of the CAP Model variable Capital Cost Old (or "CCO") as follows:

> "The cost of the equipment that is being or has been replaced by the equipment covered in an application. The value of this variable in the cost analysis procedure is calculated using one of the four hierarchal methods for this variable in the figure in §17.17(b)(1) of this title (relating to Partial Determinations)."

Conversely, CCO is defined in 30 TAC §17.17(c)(1), Note 3, as:

> "...the cost of comparable equipment or process without the pollution control...."

30 TAC §17.17(c)(1), Note 3, goes on further to provide four (4) calculation methods for CCO.

These two definitions of CCO are very different. The former definition would require that the HRSG be a replacement or a partial replacement of existing equipment.

Such an event is represented in the CAP Model scenario provided in the Applicant's June 2013 Supplemental Application and NOD response in which CCO equals the cost of ductwork or a "spool piece". In this case, the HRSG's installation in a combined-cycle retrofit of an existing simple-cycle facility represents the upgrade or retrofit of a simple-cycle combustion turbine ("CT") configuration. Specifically, it would require the replacement of that section of ductwork between the Facility's CT(s) and stack(s). Further, the 30 TAC §17.2(2) definition of CCO, when applied to units originally constructed in a combined cycle configuration, would be zero (0), since no equipment is being replaced.

In the definition of CCO in 30 TAC §17.17(c)(1), Note 3, comparable equipment or process without the pollution control feature would be considered. Sub notes 3.2 and 3.3 to this section consider a replacement scenario that would revert to the 30 TAC §17.2(2) definition of CCO. Sub notes 3.1 and 3.4 require that a HRSG without the pollution control benefits actually exist, which is not the case. The pollution control benefits are inherent in the HRSG design, where

heat from the combustion turbine is utilized to create efficiencies and, as a consequence, reduce pollution from power generation.

Further, a natural gas boiler could not be considered as a "comparable equipment or process," as suggested in the NOD. Such a natural gas boiler would not be installed in a combined cycle configuration with a combustion turbine and would, therefore, *not* be replaced by a HRSG, per 30 TAC §17.2(2) and 30 TAC §17.17(c)(1), Note 3. Additionally, a natural gas boiler is not comparable equipment because a boiler can self-generate heat to create steam, while the HRSG is incapable of creating its own heat for steam and/or electric generation.

Finally, the Applicant disagrees that allowing CCO to be $0 or the cost of ductwork/spool pieces represents a determination that the HRSG was installed for the sole purpose of preventing pollution. Indicating CCO is $0 or cost of ductwork/spool pieces simply means that no equipment is being replaced by the HRSG. Subtracting the NPVMP from the cost of the HRSG (CCN) accounts for the production benefits of the HRSG, and any further deduction would be superfluous.

D. CAP Calculations – Production Costs

The Applicant disagrees that Production Costs in the CAP should exclude costs related to operating the gas turbine, including fuel, or the steam turbine and dedicated equipment. As described in the CCN discussion above, the steam turbine and dedicated equipment are essential to production of a byproduct or marketable product from the HRSG. If the use determination calculation is going to use the value of the marketable product generated by the HRSG, it must also take into account the equipment and costs associated with producing that marketable product.

Operating & Maintenance ("O&M") costs associated with the steam turbine and dedicated equipment are necessary for the operation of these systems and their contribution to the manufacture of steam and/or electricity by the HRSG, and should be included in the Production Cost and NPVMP calculations within the CAP Model scenarios.

O&M costs and fuel costs related to the gas turbine and/or duct burners are also essential to producing a byproduct or marketable product from the HRSG. While the HRSG uses waste heat, such a heat source is not "free" and must be generated through combustion of natural gas within the combustion turbine. The TCEQ's allowance of the duct burner O&M and fuel costs to be included in Production Costs is correct, but such allowance accounts only for a small fraction of the heat needed to generate the byproduct and/or marketable product.

Finally, by updating the Production Cost assumptions used in the "CAP Model Using TCEQ Variable Assumptions" scenario with the inclusion of the Fuel Costs associated with the HRSGs' duct burners, the results of this CAP Model scenario are still a large negative percentage, at negative 266.56%. A copy of the revised "CAP Model Using TCEQ Variable Assumptions" incorporating the duct burner fuel costs is attached.

In summary, it is unreasonable for the Executive Director to interpret its regulations and apply its CAP model in a way that generates significantly negative percentages for equipment which the Legislature took pains to specifically list as pollution control equipment. Put simply, the

Executive Director has tools to do this job, but it needs to liberate itself from narrow views of the CAP that prevent it from doing the job the Legislature has told it to do.

Conclusion

The ED's position that HRSGs and ESTs are not eligible for a positive use determination because they do not meet or exceed an environmental rule is based on a misapplication of the controlling statute. Texas Tax Code specifically describes the equipment listed in §11.31(k) as "facilities, devices, or methods for the control of air, water or land pollution." This term "facility, device, or method for the control of air, water, or land pollution" is defined in the statute to mean equipment that is "installed wholly or partly to meet or exceed [environmental] rules." The ED's current position fails to recognize the importance of these statutory definitions and does not comply with the controlling statute. Even so, Applicant has provided multiple examples of environmental rules that the HRSGs and ESTs help meet or exceed - rules that the Commission has expressly recognized as "valid rules" in multiple positive use determinations. Finally, Applicant has provided the ED with more than enough technical support to understand and rely upon the Avoided Emissions and Clarified CAP Models. Applicant looks forward to a timely completion of the Executive Director's technical review and the issuance of a well-reasoned and technically supportable partial positive use determination. We stand ready to discuss the information provided to help expedite that process.

Sincerely,

Mike Nasi

Michael J. Nasi

cc: Chance Goodin, TCEQ Air Quality Division *Via Email*

Taxpayer:	*Exelon Corporation*
Plant:	*Colorado Bend Energy Center (Phase I & II)*
Plant Summary:	*580.1 MW Natural Gas-Fired Combined Cycle Plant*
Plant Location:	*Wharton County, Texas*
Project:	*Cost Analysis Procedure ("CAP") Calculations*
Date:	*March 4, 2014*
Rev:	*0*

Source Legend		**Eff. Date**
C	Calculated Assumption	6/17/2013
E	Exelon Client-Provided Data	4/23/2013
KH	Katy Hub Natural Gas Pricing	6/17/2013
ERCOT	ERCOT Electricity Pricing	6/17/2013
D&P	D&P Combined Cycle Cost Database	6/17/2013
30 TAC	30 TAC Chapter 17	12/13/2010

I. Assumptions

Plant Design Profile

PC Property			*Source*
PC Property Capital Cost	$	50,570,466	E
PC Property Capital Cost ($/kW)	$	230	C
PC Property Capacity (MW)		220	SNL
PC Property Net Annual Generation Capacity (kWh)		610,557,400	C
PC Property Net Annual Generation Capacity (MWh)		610,557	C
Plant Capacity Factor		31.67%	E
Plant Heat Rate (btu/kWh)		8,275	E
Plant Heat Rate (MMBTU/kWh)		0.01	C
Capital Cost Old ("CCO")			
Comparable Technology Cost	$	55,679,686	D&P
Comparable Technology		NG Fired Boiler	
Design Capacity Factor		0%	
Capacity ("MW")		-	

Conversion Factors

Hours/Year	8,760
kW/MW	1,000
lb/kg	2.20
s/hour	3,600
btu/mmbtu	1,000,000

Economic Assumptions

			Source
NPVMP Discount Rate		10.0%	30 TAC
NPVMP Interest Rate		10.0%	30 TAC
Periods		20	E
Fuel Cost ($/MMBTU)[1]	$	5.53	KH
PC Property Annual O&M Cost	$	827,508	E
ERCOT Electricity Pricing ($/MWh)[2]	$	46.71	ERCOT

[1] 3-year average Katy Hub gas pricing, 2010-2012.

[2] 3-year average daily historical electricity rates for ERCOT Houston Zone, 2010-2012.

Taxpayer: *Exelon Corporation*
Plant: *Colorado Bend Energy Center (Phase I & II)*
Plant Summary: *- 580.1 MW Natural Gas-Fired Combined Cycle Plant*
Plant Location: *Wharton County, Texas*
Project: *Cost Analysis Procedure ("CAP") Calculations*
Date: *March 4, 2014*
Rev: *0*

B. Cost Analysis Procedure ("CAP")

Formula

$$\frac{[(PCF \times CCN) - CCO - MP)]}{CCN}$$

A. Definitions (provided by TCEQ)[1]

1. Production Capacity Factor ("PCF")
The ratio of the capacity of the existing equipment or process to the capacity of the new equipment or process

2. Capital Cost New ("CCN")
CCN is the estimated total capital cost of the new equipment or process

3. Capital Cost Old ("CCO")
CCO is the cost of comparable equipment or a comparable process without the pollution control
The standards for calculating CCO are

3.1 If comparable equipment without the pollution control feature is on the market in the U.S. then use the average market price of the most recent generation of technology must be used.

3.2 If the conditions in variable 3.1 do not apply and the company is replacing an existing unit that already has received a positive use determination, the company shall use the CCO from the application for the previous use determination.

3.3 If the conditions in variable 3.1 and 3.2 do not apply and the company is replacing an existing unit, then the company shall convert the original cost of the unit to today's dollars by using a published industry specific standard. If the production capacity of the new equipment or process is lower than the production capacity of the old equipment or process CCO is divided by the PCF to adjust CCO to reflect the same capacity as CCN.

3.4 If the conditions in variables 3.1, 3.2 and 3.3 do not apply, and the company can obtain an estimate to manufacture the alternative equipment without the pollution control feature, then an average estimated cost to manufacture the unit must be used. The comparable unit must be the most recent generation of technology. A copy of the estimate must be provided with the worksheet including the specific source of the information

4. Marketable Product ("MP")
Anything produced or recovered using pollution control property that is sold as a product, is accumulated for later use, or is used as raw material in a manufacturing process. Marketable product includes, but is not limited to, anything recovered or produced using the pollution control property sold, traded, accumulated for later use, or used in a manufacturing process including at a different facility. Marketable product does not include any emission credits or emission allowances that result from installation of the pollution control property

5. Marketable Product Value ("MPV")
The marketable product value may be calculated in one of two ways
1. The retail value of the product produced by the equipment for one year periods. Typically, the most recent three-year average price of the material as sold on the market should be used in the calculation. If the price varies from state-to-state, the applicant shall calculate an average and explain how the figures were determined.

2. If the material is used as an intermediate material in a production process, then the value assigned to the material for internal accounting purposes may be used. It is the responsibility of the applicant to show that the internally assigned value is comparable to the value assigned by other similar producers of the product.

6. Direct Costs of Production ("DCP")
The costs directly attributed to the production of the product, including raw materials, storage, transportation, and personnel, but excluding non-cash costs, such as overhead and depreciation

7. n Factor
The estimated useful life in years of the equipment that is being evaluated for a use determination

8. t Factor
Year One

9. Interest Rate
10%.

[1] Title 30, Texas Administrative Code, Chapter 17

B. CAP Formulas (provided by TCEQ)

Partial Use Determination = $\frac{[(PCF \times CCN) - CCO - NPVMP)]}{CCN}$

Where

Production Capacity Factor ("PCF") = $\frac{\text{Production Capacity of Existing Equipment or Process}}{\text{Production Capacity of New Equipment or Process}}$

And where

NPVMP = $\sum_{t=1}^{n} \frac{MPV - PC}{(1 + \text{Interest Rate})^t}$

C. CAP Formulas for PC Property

Marketable Product Value ("MPV") = Electricity Price ($/MWh) x MWh per Year from Steam Turbine

Direct Cost of Production ("DCP") = Annual O&M ($) + Annual Fuel Cost ($)

Taxpayer:	*Exelon Corporation*
Plant:	*Colorado Bend Energy Center (Phase I & II)*
Plant Summary:	*580.1 MW Natural Gas-Fired Combined Cycle Plant*
Plant Location:	*Wharton County, Texas*
Project:	*Cost Analysis Procedure ("CAP") Calculations*
Date:	*March 4, 2014*
Rev:	*0*

III. Cost Analysis Procedure ("CAP") Calculations for Colorado Bend HRSGs

Formula $\frac{(PCF \times CCN) - CCO - NPVMP}{CCN}$

A. Marketable Product Value ("MPV")

Electricity Price			PC MWh / Year			($) MPV
$46.71	$/MWh	×	610,557	MWh/Year	=	$28,518,499

B. Production Cost ("PC")

Annual O&M Cost	+	Duct Burner Fuel Costs	=	Annual Production Cost ($)
$827,508	+	$18,397,204	=	$19,224,712

Net Present Value Marketable Product ("NPVMP") Calculation

$$\sum_{t=1}^{n} \frac{(\$)\ MPV - (\$)\ PC}{(1 + Interest\ Rate)^t} = NPVMP\ (\$)$$

$$\sum_{t=1}^{n} \frac{\$28,518,499 - \$19,224,712}{(1 + 10\%)^t} = \$79,123,251$$

NPVMP = $79,123,251

* If MP is ≤ 0, then MP = 0.

Taxpayer: *Exelon Corporation*
Plant: *Colorado Bend Energy Center (Phase I & II)*
Plant Summary: *580.1 MW Natural Gas-Fired Combined Cycle Plant*
Plant Location: *Wharton County, Texas*
Project: *Cost Analysis Procedure ("CAP") Calculations*
Date: *March 4, 2014*
Rev: *0*

C. Production Capacity Factor ("PCF")

Production Capacity of Existing Equipment or Process / Production Capacity of New Equipment or Process	=	PCF
0 / 220 MW * 31.67%	=	PCF 0.000

D. Capital Cost New ("CCN")
PC Property = CCN $50,570,466

E. Capital Cost Old ("CCO")
Comparable Technology = CCO $55,679,686

Partial Use Determination Calculation

$$\frac{(PCF \times CCN) - CCO}{CCN} - NPVMP = \text{Partial Use Determination \%}$$

$$\frac{0.000 \times \$50,570,466 - \$55,679,686}{\$50,570,466} - \$79,123,251 = -256.56\%$$

TCEQ Use Determination Application Section 12, use:		
Use Percentage		-256.56%
Estimated Dollar Value	$	50,570,466

Eligible HRSG Costs = $ (134,802,937)
(Partial Use Determination % x PC Property Cost)

Electricity - PV Calculations

Difference	Period	Interest Rate	PV - Period
$9,293,787	1	1.10000	$ 8,448,898
$9,293,787	2	1.21000	$ 7,680,816
$9,293,787	3	1.33100	$ 6,982,560
$9,293,787	4	1.46410	$ 6,347,782
$9,293,787	5	1.61051	$ 5,770,711
$9,293,787	6	1.77156	$ 5,246,101
$9,293,787	7	1.94872	$ 4,769,182
$9,293,787	8	2.14359	$ 4,335,620
$9,293,787	9	2.35795	$ 3,941,473
$9,293,787	10	2.59374	$ 3,583,157
$9,293,787	11	2.85312	$ 3,257,416
$9,293,787	12	3.13843	$ 2,961,287
$9,293,787	13	3.45227	$ 2,692,079
$9,293,787	14	3.79750	$ 2,447,345
$9,293,787	15	4.17725	$ 2,224,859
$9,293,787	16	4.59497	$ 2,022,599
$9,293,787	17	5.05447	$ 1,838,726
$9,293,787	18	5.55992	$ 1,671,569
$9,293,787	19	6.11591	$ 1,519,609
$9,293,787	20	6.72750	$ 1,381,462
NPVMP:			**$ 79,123,251**

Bryan W. Shaw, Ph.D., P.E., *Chairman*
Toby Baker, *Commissioner*
Zak Covar, *Commissioner*
Richard A. Hyde, P.E., *Executive Director*

TEXAS COMMISSION ON ENVIRONMENTAL QUALITY

Protecting Texas by Reducing and Preventing Pollution

June 5, 2014

Ms. Kathryn Tronsberg Macciocca
Director
Duff & Phelps, LLC
2000 Market Street, Ste 2700
Philadelphia, PA 19103

Re: Notice of Negative Use Determination
Navasota Wharton Energy Partners, LP
Colorado Bend Facility
Wharton (Wharton County)
Regulated Entity Number: RN104772538
Customer Reference Number: CN603806928
Application Number: 11926
Tracking Number: DPCOBEND2008B

Dear Ms. Macciocca:

This letter responds to Navasota Wharton Energy Partners, LP's Application for Use Determination for Colorado Bend Facility, originally submitted on March 19, 2008 and remanded to the executive director (ED) on December 5, 2012 by the Texas Commission on Environmental Quality (TCEQ) commissioners. Your application seeks a use determination for four Heat Recovery Steam Generators (HRSGs) and requested a Tier IV partial use determination.

The ED has completed the review for application #07-11926 and the associated notice of deficiency (NOD) responses and has issued a Negative Use Determination for the property in accordance with Title 30 Texas Administrative Code (TAC) Chapter 17. The Negative Use Determination is issued because the methods for determining the use determination percentage were not reasonable.

The Tier IV application process, in place in commission rules between February 2008 and December 2010, allowed an applicant to propose a method for calculating a partial use determination. The commission rules allow for determinations that distinguish the proportion of property that is used to control, monitor, prevent, or reduce pollution from the proportion of property that is used to produce goods or services. If the property is not used wholly for the control of air, water, or land pollution, the applicant must present information in the application for the determination of the proportion of the property that is pollution control. It is the responsibility of the applicant to propose a reasonable method for determining the use determination percentage. It is the

responsibility of the ED to review the proposed method and make the final determination.

After careful review of the three methods for calculating a partial positive use determination included in the applicant's submittals, the ED has determined that all but one of the methods are unacceptable. The two methods proposed by the applicant do not reasonably distinguish the proportion of the HRSG that provides a purported pollution control benefit from the proportion of the HRSG that produces steam that is used in a process or to produce electricity for use or sale. The one method that the ED does find acceptable, the Cost Analysis Procedure (CAP) adopted by the commission, produces a negative number. Therefore, the property is not eligible for a positive use determination.

The following is an explanation of the ED's review of the methodologies presented in your application:

- Avoided Emissions Approach (26%): This approach is not reasonable because it does not distinguish the proportion of property used to control or prevent pollution from the proportion used to produce a product. Furthermore, the avoided emission approach does not attribute any value to production. By attributing the entire avoided emissions to the HRSGs, this approach ignores nitrogen oxides (NOx) reductions related to other property for which a positive use determination has been issued.

- Modified CAP Calculations (100%): Capital Cost New (CCN) includes a steam turbine and water systems. A negative determination was issued for the two steam turbines on May 1, 2008. The steam turbines are not a part of this application and the related value cannot be included in CCN. The water systems are also production equipment and should not be included in CCN. Allowing Capital Cost Old (CCO) to be $0 ignores that HRSGs are alternative production equipment. CCO is the cost of comparable equipment without the pollution control. If the HRSGs produce steam, then comparable equipment that produces steam without pollution control is a boiler. The ED does not find it reasonable to attribute $0 cost to CCO in the CAP.

- CAP as proposed by the executive director (-267%): The CAP formula was adopted by the commission to provide a methodology for determinations that distinguishes the proportion of property that is used to control, monitor, prevent, or reduce pollution from the proportion of property that is used to produce goods or services. The fact that the CAP calculated results in a negative number shows that the HRSGs pollution prevention benefit is negated by its ability to produce a product.

Please be advised that a Negative Use Determination may be appealed. The appeal must be filed with the TCEQ Chief Clerk within 20 days after the receipt of this letter in accordance with 30 TAC §17.25.

If you have questions regarding this letter or need further assistance, please contact Ronald Hatlett of the Tax Relief for Pollution Control Property Program by telephone at (512) 239-6348, by e-mail at ronald.hatlett@tceq.texas.gov, or write to the Texas Commission on Environmental Quality, Tax Relief for Pollution Control Property Program, MC-110, P.O. Box 13087, Austin, Texas 78711-3087.

Sincerely,

David Brymer, Director
Air Quality Division

DB/rh

cc: Chief Appraiser, Wharton County Appraisal District, 308 E. Milam St., Wharton, Texas, 77488-4918

Bryan W. Shaw, Ph.D., P.E., *Chairman*
Toby Baker, *Commissioner*
Zak Covar, *Commissioner*
Richard A. Hyde, P.E., *Executive Director*

TEXAS COMMISSION ON ENVIRONMENTAL QUALITY

Protecting Texas by Reducing and Preventing Pollution

June 17, 2014

Ms. Kathryn Tronsberg Macciocca
Director
Duff & Phelps, LLC
2000 Market Street, Ste 2700
Philadelphia, PA 19103

Re: Notice of Negative Use Determination
Navasota Wharton Energy Partners, LP
Colorado Bend Facility
Wharton (Wharton County)
Regulated Entity Number: RN104772538
Customer Reference Number: CN603806928
Application Number: 11926
Tracking Number: DPCOBEND2008B

Dear Ms. Macciocca:

This letter responds to Navasota Wharton Energy Partners, LP's Application for Use Determination for Colorado Bend Facility, originally submitted on March 19, 2008 and remanded to the executive director (ED) on December 5, 2012 by the Texas Commission on Environmental Quality (TCEQ) commissioners. Your application seeks a use determination for four Heat Recovery Steam Generators (HRSGs) and requested a Tier IV partial use determination.

The ED has completed the review for application #07-11926 and the associated notice of deficiency (NOD) responses and has issued a Negative Use Determination for the property in accordance with Title 30 Texas Administrative Code (TAC) Chapter 17. The Negative Use Determination is issued because the methods for determining the use determination percentage were not reasonable.

The Tier IV application process, in place in commission rules between February 2008 and December 2010, allowed an applicant to propose a method for calculating a partial use determination. The commission rules allow for determinations that distinguish the proportion of property that is used to control, monitor, prevent, or reduce pollution from the proportion of property that is used to produce goods or services. If the property is not used wholly for the control of air, water, or land pollution, the applicant must present information in the application for the determination of the proportion of the property that is pollution control. It is the responsibility of the applicant to propose a reasonable method for determining the use determination percentage. It is the

responsibility of the ED to review the proposed method and make the final determination.

After careful review of the three methods for calculating a partial positive use determination included in the applicant's submittals, the ED has determined that all but one of the methods are unacceptable. The two methods proposed by the applicant do not reasonably distinguish the proportion of the HRSG that provides a purported pollution control benefit from the proportion of the HRSG that produces steam that is used in a process or to produce electricity for use or sale. The one method that the ED does find acceptable, the Cost Analysis Procedure (CAP) adopted by the commission, produces a negative number. Therefore, the property is not eligible for a positive use determination.

The following is an explanation of the ED's review of the methodologies presented in your application:

- Avoided Emissions Approach (26%): This approach is not reasonable because it does not distinguish the proportion of property used to control or prevent pollution from the proportion used to produce a product. Furthermore, the avoided emission approach does not attribute any value to production. By attributing the entire avoided emissions to the HRSGs, this approach ignores nitrogen oxides (NOx) reductions related to other property for which a positive use determination has been issued.

- Modified CAP Calculations (100%): Capital Cost New (CCN) includes a steam turbine and water systems. A negative determination was issued for the two steam turbines on May 1, 2008. The steam turbines are not a part of this application and the related value cannot be included in CCN. The water systems are also production equipment and should not be included in CCN. Allowing Capital Cost Old (CCO) to be $0 ignores that HRSGs are alternative production equipment. CCO is the cost of comparable equipment without the pollution control. If the HRSGs produce steam, then comparable equipment that produces steam without pollution control is a boiler. The ED does not find it reasonable to attribute $0 cost to CCO in the CAP.

- CAP as proposed by the executive director (-267%): The CAP formula was adopted by the commission to provide a methodology for determinations that distinguishes the proportion of property that is used to control, monitor, prevent, or reduce pollution from the proportion of property that is used to produce goods or services. The fact that the CAP calculated results in a negative number shows that the HRSGs pollution prevention benefit is negated by its ability to produce a product.

Please be advised that a Negative Use Determination may be appealed. The appeal must be filed with the TCEQ Chief Clerk within 20 days after the receipt of this letter in accordance with 30 TAC §17.25.

If you have questions regarding this letter or need further assistance, please contact Ronald Hatlett of the Tax Relief for Pollution Control Property Program by telephone at (512) 239-6348, by e-mail at ronald.hatlett@tceq.texas.gov, or write to the Texas Commission on Environmental Quality, Tax Relief for Pollution Control Property Program, MC-110, P.O. Box 13087, Austin, Texas 78711-3087.

Sincerely,

David Brymer, Director
Air Quality Division

DB/rh

cc: Chief Appraiser, Wharton County Appraisal District, 308 E. Milam St., Wharton, Texas, 77488-4918