TCEQ Docket No. 2012-1682-MIS-U

Hays Energy Reply Brief

EXHIBIT A

TEXAS COMMISSION ON ENVIRONMENTAL QUALITY
APPLICATION FOR USE DETERMINATION
FOR POLLUTION CONTROL PROPERTY

The TCEQ has the responsibility to determine whether a property is a pollution control property. A person seeking a use determination must complete the attached application or a copy or similar reproduction. For assistance in completing this form refer to the TCEQ guidelines document, *Property Tax Exemptions for Pollution Control Property,* as well as 30 TAC §17, rules governing this program. For additional assistance please contact the Tax Relief for Pollution Control Property Program at (512) 239-3100. The application should be completed and mailed, along with a complete copy and the appropriate fee, to: TCEQ MC-214, Cashiers Office, PO Box 13088, Austin, Texas 78711-3088.

Information must be provided for each field unless otherwise noted.

1. GENERAL INFORMATION

A. What is the type of ownership of this facility?

- ☐ Corporation
- ☐ Partnership
- ☒ Limited Partnership
- ☐ Sole Proprietor
- ☐ Utility
- ☐ Other:

B. Size of company: Number of Employees

- ☐ 1 to 99
- ☒ 100 to 499
- ☐ 500 to 999
- ☐ 1,000 to 1,999
- ☐ 2,000 to 4,999
- ☐ 5,000 or more

C. Business Description: (Provide a brief description of the type of business or activity at the facility)
Power Plant

2. TYPE OF APPLICATION

- ☐ **Tier I** $150 Fee
- ☐ **Tier II** $1,000 Fee
- ☐ **Tier III** $2,500 Fee
- ☒ **Tier IV** $500 Fee

NOTE: Enclose a check, money order to the TCEQ, or a copy of the ePay receipt along with the application to cover the required fee.

3. NAME OF APPLICANT

A. Company Name: Hays Energy Limited Partnership
B. Mailing Address (Street or P.O. Box): %Ryan, Inc. 13155 Noel Road 12th Floor LB-71
C. City, State, and Zip: Dallas, Texas 75240

4. PHYSICAL LOCATION OF PROPERTY REQUESTING A TAX EXEMPTION

A. Name of Facility or Unit: Hays Energy Limited Partnership
B. Type of Mfg. Process or Service: Electric Power Generation
C. Street Address: 1601 Francis Harris Lane
D. City, State, and Zip: San Marcos, Texas 78666
E. Tracking Number (*Optional*):
F. Company or Registration Number *(Optional)*:

5. APPRAISAL DISTRICT WITH TAXING AUTHORITY OVER PROPERTY

A. Name of Appraisal District: Hays Central Appraisal District
B. Appraisal District Account Number: P111678

6. CONTACT NAME

A. Company/Organization Name	Ryan, Inc.
B. Name of Individual to Contact:	Greg Odell
C. Mailing Address (Street or P.O. Box):	13155 Noel Road, Suite 100
D. City, State, and Zip:	Dallas, TX 75240
E. Telephone number and fax number:	972.934.0022
F. E-Mail address (if available):	greg.odell@ryanco.com

7. RELEVANT RULE, REGULATION, OR STATUTORY PROVISION

For each media, please list the specific environmental rule or regulation that is met or exceeded by the installation of this property.

MEDIUM	Rule/Regulation/Law
Air	See Attached Exhibit
Water	
Waste	

8. DESCRIPTION OF PROPERTY (Complete for all applications)

Describe the property and how it will be used at your facility. **Do not simply repeat the description from the Equipment & Categories List**. Include sketches of the equipment and flow diagrams of the processes where appropriate. Use additional sheets, if necessary.

Land: If a use determination is being requested for land, provide a legal description and an accurate drawing of the property in question.

9. PARTIAL PERCENTAGE CALCULATION

This section is to be completed for Tier III and IV applications. For information on how to conduct the partial percentage calculation, see the application instructions document. Attach calculation documents to completed application.

10. PROPERTY CATEGORIES AND COSTS

List each control device or system for which a use determination is being sought. Provide additional attachments for more than 3 properties.

Property	Taxable on 1/01/94?	DFC Box	ECL #	Estimated Cost	Use %
Land					
Property See Attached Exhibit					
Totals					

11. EMISSION REDUCTION INCENTIVE GRANT

(For more information about these grants, see the Application Instruction document).

Will an application for an Emission Reduction Incentive Grant be filed for this property/project?

☐Yes ☒No

12. APPLICATION DEFICIENCIES

After an initial review of the application, the TCEQ may determine that the information provided with the application is not sufficient to make a use determination. The TCEQ may send a notice of deficiency, requesting additional information that must be provided within 30 days of the written notice.

13. FORMAL REQUEST FOR SIGNATURE

By signing this application, you certify that this information is true to the best of your knowledge and belief.

Name: _____ Date: April 25, 2008

Title: Agent

Company: Ryan, Inc.

Under Texas Penal Code, Section 37.10, if you make a false statement on this application, you could receive a jail term of up to one year and a fine up to $2,000, or a prison term of two to 10 years and a fine of up to $5,000.

14. DELINQUENT FEE/PENALTY PROTOCOL

This form will not be processed until all delinquent fees and/or penalties owed to the TCEQ or the Office of the Attorney General on behalf of the TCEQ are paid in accordance with the Delinquent Fee and Penalty Protocol. (Effective September 1, 2006)

Hays Energy Limited Partnership

Tier IV Application

PROPERTY	TAXABLE ON OR BEFORE 1/1/94? (Y / N)	DECISION FLOW CHART BOX 7, 9, 10	PEL #	ESTIMATED PURCHASE COST	PERCENT EXEMPT	ADJUSTED COST	MEDIUM	RULE / REGULATION / LAW	DESCRIPTION / ENVIRONMENTAL BENEFIT
Four Heat Recovery Steam Generators (HRSG) in Units 1 through 4	N	7	B-8	$18,055,344	35%	$6,297,134	Air	30 Texas Administrative Code §106.512(6)(B) 30 Texas Administrative Code §111.111(a)	The HRSG uses the heat from the exhaust of the gas fired turbines to create steam before releasing the exhaust into the atmosphere. The exhaust stacks control the dispersion of the emissions into atmosphere.
Eight Enhanced Steam Turbines in Units 1 through 4	N	3	B-10	$ 26,095,228	35%	$9,101,192	Air	30 Texas Administrative Code §106.512(6)(B) 30 Texas Administrative Code §111.111(a)	Steam Turbines are used to convert steam from gas turbines in rotational energy. Steam turbines recycle steam containing dangerous emissions in rotational mechanical energy. The regenerative cycle prevents the dispersion of the emissions into the atmopshere.
Grand Total				$44,150,572		$15,398,326			

Hays Energy Limited Partnership
Partial Determination Calculation

Old Production Capacity → | New Production →

Condition	Heat Input (LHV)	GT Power Output	ST Power Output	Total Power Output
	KJ/sec	*kW*	*kW*	*kW*
1	418,000	147,700	82,400	230,100
2	438,900	160,900	86,200	247,100
3	449,000	167,000	87,400	254,400
4	492,400	191,000	87,900	278,900
	1,798,300.00	**666,600.00**	**343,900.00**	**1,010,500.00**
Production %		**66%**	**34%**	

Using the formula for Plant Thermal Efficiency: Eff=(Gas Output/Total Heat Input) x 100 → | Using the formula for Plant Thermal Efficiency: Eff=(Steam Output/Total Heat Input) x 100 →

Condition	CC Efficiency (Gross)	Simple Cycle Efficiency (Gross)	Steam Cycle Efficiency
	%	%	%
1	55.05	35.33	19.71
2	56.30	36.66	19.64
3	56.66	37.19	19.47
4	56.64	38.79	17.85
	56.19	**37.07**	**19.12**

Condition	Station Service	Total Power Output (Net)	CC Efficiency (Net)	Net Heat Rate (LHV)
	kW	*kW*	%	*KJ/KWH*
1	5,400	224,700	53.76	6,696.93
2	5,400	249,000	55.46	6,491.57
3	5,400	273,500	55.54	6,481.32
4	**5,400.00**	**747,200.00**	**41.55**	**6,556.60**

Production Capacity of Gas Turbine		$	666,600.00
Production Capacity of Steam Turbine		$	1,010,500.00
Production Capacity Factor			0.66
Capital Cost of Gas Turbine Process	CCO →	$	105,195,352.00
Capital Cost of Steam Turbine Process	CCN →	$	338,352,088.00
Partial Percentage Factor	$\frac{[(PCF*CCN)-CCO]}{CCN}$		0.35
Tier IV Equipment Value		$	64,343,938.00
Total Pollution Control Exempt		**$**	**22,441,134.92**

Assumptions:

Procuction Capacity Factor (PCF) is used to adjust the capacity of the new process to the capacity of the existing process. When there is a increase in production capacity, PCF is used to adjust the capacity of the new process to the existing process. In this case, the method of calculation is modified so that PCF is applied to Capital Cost Old rather than Capital Cost New.

The total production capacity of the gas power turbines are use to determined the production capacity before steam generators are placed in to service; therefore, **Capital Cost Old (CCO)** is the cost of total process without the pollution control. The total process cost of all Non-Pollution Control Equipment is $105,195,352

The total production capacity of the steam power turbines are used to determine the production capacity of the new process; therfore, **Capital Cost New (CCN)** is the total cost of pollution control equipment. This would also correlate to the fact that steam output from gas turbine is captured by the steam turbine. The total process cost for pollution control equipment is $338,352,088.

Note:
This sheet approximates the simple cycle efficiency based on the design data given in the ABB Heat Balance Drawings applicable to Hays Energy Project.
ABB Ref Drawings: 1 AHV 302 871 sheets 1-4

	Fuel	Ambient Air Temp	Condenser Type	Steam Injection
Condition 1	Natural Gas	40 C	ACC	No
Condition 2	Natural Gas	27 C	ACC	No
Condition 3	Natural Gas	20 C	ACC	No
Condition 4	Natural Gas	-9 C	ACC	No

TCEQ Docket No. 2012-1682-MIS-U

Hays Energy Reply Brief

EXHIBIT B

Buddy Garcia, *Chairman*
Larry R. Soward, *Commissioner*
Bryan W. Shaw, Ph.D., *Commissioner*
Glenn Shankle, *Executive Director*

TEXAS COMMISSION ON ENVIRONMENTAL QUALITY

Protecting Texas by Reducing and Preventing Pollution

April 29, 2008

RYAN, INC
GREG ODELL
12TH FLOOR LB 72
13155 NOEL RD
DALLAS TX 75240 -5090

This letter is to inform you that on **4/29/2008**, Use Determination Application, **07-12272** (self assigned tracking number), was declared to be administratively complete. This application was filed for the following facility:

HAYS ENERGY LP
1601 FRANCIS HARRIS LN
SAN MARCOS TX 78666

The next step in the Use Determination Application process is the technical review of the application. If this is a Tier I, II, or III application the technical review will be completed within sixty days of the administrative complete date. If this is a Tier IV application the technical review will be completed within 30 days of the administrative complete date. If additional technical information is required a notice of deficiency letter (NOD) will be issued. The time period between the issuance of the NOD and the receipt of the response is not counted in determinating the length of the technical review .The TCEQ will notify you after the technical review has been completed. In accordance with the statute, the TCEQ has mailed a notice of receipt of this Use Determination Application to the **HAYS** County Appraisal District. Please contact the Tax Relief for Pollution Control Property Program at (512) 239-3100 if you have any questions.

Sincerely,

Ron Hatlett
Tax Relief for Pollution Control Property Program

TCEQ Docket No. 2012-1682-MIS-U

Hays Energy Reply Brief

EXHIBIT C

From: Odell, Greg [Greg.Odell@ryan.com]

Sent: Wednesday, August 27, 2008 1:06 PM

To: 'Ronald Hatlett'; 'Gary McArthur'

Subject: Midlothian and Hays Energy

Attachments: Midlothian Energy Tier IV Exempt Percentage Calculation Amended.pdf; Midlothian Pollution Control Tier IV List Amended.pdf; Hays TCEQ Tier IV Exemption Percentage Calculation Amended.pdf; ANP Hays PT TX TCEQ IV Amended 8-27-08.pdf

Ron and Gary,

Attached are a couple of amended calculations for Midlothian and Hays Energy using the efficiency gain. The benefit is similar to the benefit in the original application, which in both cases produces an exempt percentage of 100% when taking the benefit amount against the plant.

Thanks,

Greg E. Odell
Director
Ryan
Three Galleria Tower
13155 Noel Road
Suite 100
Dallas, Texas 75240

972.934.0022 Ext. 10-1276
214.392.1182 Mobile
972.934.4939 Facsimile

www.ryanco.com

Innovative Solutions to Taxing Problems

Midlothian Energy Limited Partnership
Pollution Control Exemption Calculation

Condition	Heat Input (LHV)	GT Power Output	ST Power Output	Total Power Output
	KJ/sec	*kW*	*kW*	*kW*
1	418,000	147,700	82,400	230,100
2	438,900	160,900	86,200	247,100
3	449,000	167,000	87,400	254,400
4	492,400	191,000	87,900	278,900
	1,798,300	666,600	343,900	1,010,500

Using the formula for Plant Thermal Efficiency: Eff=(Gas Output/Total Heat Input) x 100

Using the formula for Plant Thermal Efficiency: Eff=(Steam Output/Total Heat Input) x 100

Condition	CC Efficiency	Simple Cycle Efficiency	Steam Cycle Efficiency
	%	%	%
1	55.05	35.33	19.71
2	56.30	36.66	19.64
3	56.66	37.19	19.47
4	56.64	38.79	17.85
	56.19	37.07	19.12

Condition	Station Service	Total Power Output (Net)	CC Efficiency (Net)	Net Heat Rate (LHV)
	kW	*kW*	*%*	*KJ/KWH*
1	5,400	224,700	53.76	6,696.93
2	5,400	249,000	55.46	6,491.57
3	5,400	273,500	55.54	6,481.32
4	5,400	747,200	42	6,556.60

<u>Efficiency Gain</u>

(CCE/SCE)-1=Efficiency Gain
1-Efficiency Gain = Environmental Benefit
CCE = 56.19
SCE = 37.07
(56.19/37.07)-1=.52
1-.52 = .48

Environmental Benefit		0.48
Tier IV Equipment Cost	$	82,412,314.00
Total Plant Cost	$	445,616,370.00
Pollution Control Exempt Cost @ 48% of Total Plant Cost	$	213,895,857.60
Tier IV Pollution Control Exempt Percentage		100%

Midlothian Energy LP
Venus TX

Pollution Control Property

11. PROPERTY CATEGORIES AND COST							7. RELEVANT RULE, REGULATION, OR STATUTORY PROVISION		8. DESCRIPTION OF PROPERTY
PROPERTY	TAXABLE ON OR BEFORE 1/1/94? (Y / N)	DECISION FLOW CHART BOX PART B	PEL #	ESTIMATED PURCHASE COST	PERCENT EXEMPT	ADJUSTED COST	MEDIUM	RULE / REGULATION / LAW	DESCRIPTION / ENVIRONMENTAL BENEFIT
Twelve Enhanced Steam Turbines in Units 1 through 6	N	3	B-10	$41,832,828	100%	$41,832,828	Air	30 Texas Administrative Code §106.512(6)(B) 30 Texas Administrative Code§111.111(a) 30 Texas Administrative Code §111.151(a) 30 Texas Administrative Code §111.153(b)	Steam Turbines are used to convert steam from gas turbines in rotational energy. Steam turbines recycle steam containing dangerous emissions in rotational mechanical energy. The regenerative cycle prevents the dispersion of the emissions into the atmopshere.
Six Heat Recovery Steam Generators (HRSG) in Units 1 through 6	N	3	B-8	$40,579,486	100%	$40,579,486	Air	30 Texas Administrative Code §106.512(6)(B) 30 Texas Administrative Code§111.111(a) 30 Texas Administrative Code §111.151(a) 30 Texas Administrative Code §111.153(b)	The HRSG uses the heat from the exhaust of the gas fired turbines to create steam before releasing the exhaust into the atmosphere. The exhaust stacks control the dispersion of the emissions into atmosphere.
		GRAND TOTAL		$82,412,314		$82,412,314			

Hays Energy Limited Partnership
Pollution Control Exemption Calculation

Condition	Heat Input (LHV)	GT Power Output	ST Power Output	Total Power Output
	KJ/sec	*kW*	*kW*	*kW*
1	418,000	147,700	82,400	230,100
2	438,900	160,900	86,200	247,100
3	449,000	167,000	87,400	254,400
4	492,400	191,000	87,900	278,900
	1,798,300	666,600	343,900	1,010,500

Using the formula for Plant Thermal Efficiency: Eff=(Gas Output/Total Heat Input) x 100

Using the formula for Plant Thermal Efficiency: Eff=(Steam Output/Total Heat Input) x 100

Condition	CC Efficiency	Simple Cycle Efficiency	Steam Cycle Efficiency
	%	%	%
1	55.05	35.33	19.71
2	56.30	36.66	19.64
3	56.66	37.19	19.47
4	56.64	38.79	17.85
	56.19	37.07	19.12

Condition	Station Service	Total Power Output (Net)	CC Efficiency (Net)	Net Heat Rate (LHV)
	kW	*kW*	%	*KJ/KWH*
1	5,400	224,700	53.76	6,696.93
2	5,400	241,700	55.07	6,537.13
3	5,400	249,000	55.46	6,491.16
4	5,400	273,500	55.54	6,481.32
	5,400	247,225	54.96	6,551.64

Efficiency Gain

(CCE/SCE)-1=Efficiency Gain
1- Efficiency Gain = Environmental Benefit
CCE = 56.19
SCE = 37.07
(56.19/37.07)-1=.52
1-.52=.48

Environmental Benefit		0.48
Tier IV Equipment Cost	$	44,150,572.00
Total Plant Cost	$	343,656,481.00
Pollution Control Exempt Cost @ 48% of Total Plant Cost	$	164,955,110.88
Tier IV Pollution Control Exempt Percentage		100%

Hays Energy Limited Partnership

Tier IV Application

PROPERTY	TAXABLE ON OR BEFORE 1/1/94? (Y / N)	DECISION FLOW CHART BOX 7, 9, 10	PEL #	ESTIMATED PURCHASE COST	PERCENT EXEMPT	ADJUSTED COST	MEDIUM	RULE / REGULATION / LAW	DESCRIPTION / ENVIRONMENTAL BENEFIT
Four Heat Recovery Steam Generators (HRSG) in Units 1 through 4	N	7	B-8	$18,055,344	100%	$18,055,344	Air	30 Texas Administrative Code §106.512(6)(B) 30 Texas Administrative Code §111.111(a)	The HRSG uses the heat from the exhaust of the gas fired turbines to create steam before releasing the exhaust into the atmosphere. The exhaust stacks control the dispersion of the emissions into atmosphere.
Eight Enhanced Steam Turbines in Units 1 through 4	N	3	B-10	$ 26,095,228	100%	$26,095,228	Air	30 Texas Administrative Code §106.512(6)(B) 30 Texas Administrative Code §111.111(a)	Steam Turbines are used to convert steam from gas turbines in rotational energy. Steam turbines recycle steam containing dangerous emissions in rotational mechanical energy. The regenerative cycle prevents the dispersion of the emissions into the atmopshere.
Grand Total				$44,150,572		$44,150,572			

TCEQ Docket No. 2012-1682-MIS-U

Hays Energy Reply Brief

EXHIBIT D

Buddy Garcia, *Chairman*
Larry R. Soward, *Commissioner*
Bryan W. Shaw, Ph.D., *Commissioner*
Mark R. Vickery, P.G., *Executive Director*

TEXAS COMMISSION ON ENVIRONMENTAL QUALITY

Protecting Texas by Reducing and Preventing Pollution

December 3, 2008

LaDonna Castañuela, Chief Clerk
Texas Commission on Environmental Quality
Office of the Chief Clerk, MC-105
P.O. Box 13087
Austin, Texas 78711-3087

Re: TCEQ Docket Numbers:
2008-0830-MIS-U (UD 07-11914/Tenaska Gateway Partners, Ltd)
2008-0831-MIS-U (UD 07-11966/Freestone Power Generation, L.P)
2008-0832-MIS-U (UD 07-11971/Borger Energy Associates, LP)
2008-0849-MIS-U (UD 07-11969/Brazos Valley Energy, L.P.)
2008-0850-MIS-U (UD 07-11994/Freeport Energy Center, L.P.)
2008-0851-MIS-U (UD 07-11926/Navasota Wharton Energy Partners, LP)
Executive Director's Response Brief to Rusk County, Freestone Central, Hutchinson County, Fort Bend Central, Brazoria County, and Wharton County Appraisal Districts' Appeals of the Executive Director's Use Determinations

Dear Ms. Castañuela:

Enclosed for filing, please find an original and 7 copies of the *"Executive Director's Response Brief to Rusk County, Freestone Central, Hutchinson County, Fort Bend Central, Brazoria County, and Wharton County Appraisal Districts' Appeals of the Executive Director's Negative Use Determinations."*

Please file-stamp these documents and return one copy to D. A. Chris Ekoh, Staff Attorney, Environmental Law Division, MC 173. If you have any questions, please do not hesitate to contact me at (512) 239-5487.

Sincerely,

D. A. Chris Ekoh, Staff Attorney
Environmental Law Division

TCEQ Docket Numbers
2008-0830-MIS-U (UD 07-11914/Tenaska Gateway Partners, Ltd – Rusk County)
2008-0831-MIS-U (UD 07-11966/Freestone Power Generation, L.P. – Freestone County)
2008-0832-MIS-U (UD 07-11971/Borger Energy Associates, LP – Hutchinson County)
2008-0849-MIS-U (UD 07-11969/Brazos Valley Energy, L.P. – Fort Bend County)
2008-0850-MIS-U (UD 07-11994/Freeport Energy Center, L.P. – Brazoria County)
2008-0851-MIS-U (UD 07-11926/Navasota Wharton Energy Partners, LP – Wharton County)

APPEAL OF THE EXECUTIVE	§	**BEFORE THE**
DIRECTOR'S USE DETERMINATIONS	§	
ISSUED TO	§	
TENASKA GATEWAY PARTNERS, LTD;	§	
FREESTONE POWER GENERATION, L.P.;	§	**TEXAS COMMISSION ON**
BORGER ENERGY ASSOCIATES, LP;	§	
BRAZOS VALLEY ENERGY, L.P.;	§	
FREEPORT ENERGY CENTER, L.P.; and	§	
NAVASOTA WHARTON ENERGY	§	
PARTNERS, LP	§	**ENVIRONMENTAL QUALITY**

EXECUTIVE DIRECTOR'S RESPONSE BRIEF TO RUSK COUNTY, FREESTONE CENTRAL, HUTCHINSON COUNTY, FORT BEND CENTRAL, BRAZORIA COUNTY, AND WHARTON COUNTY APPRAISAL DISTRICTS' APPEALS OF THE EXECUTIVE DIRECTOR'S USE DETERMINATIONS

The Executive Director of the Texas Commission on Environmental Quality (the Commission or TCEQ) files this Response to the Appeals of the Executive Director's Use Determinations Issued to Tenaska Gateway Partners, Ltd (Tenaska); Freestone Power Generation, L.P. (Freestone); Borger Energy Associates, LP (Borger); Brazos Valley Energy, L.P (Brazos); Freeport Energy Center, L.P (Freeport); and Navasota Wharton Energy Partners, LP (Navasota). The appeals were submitted by or on behalf of the affected county appraisal districts. The regulated entities did not appeal the Executive Director's use determinations.

For the reasons described below, the Executive Director respectfully requests that the Commission adopt the recommendation of the Executive Director and remand the respective appeals to the Executive Director to issue new determinations consistent with the Executive Director's recommendation as adopted by the Commission.

Part I of this brief presents a background of the Tax Exemption for Pollution Control Property Program, including a discussion of House Bill 3732; Part II discusses the procedural history of each application including the Executive Director's determinations; Part III describes the devices involved in these appeals, and the circumstances leading to the formation of a Workgroup to assist in establishing the method of calculating the proper pollution control percentage for the devices; and Part IV presents the Executive Director's recommendation to the Commission on the proper pollution control percentage to adopt for the devices involved in these appeals.

I.

PROGRAM BACKGROUND

These appeals of the Executive Director's use determinations are filed pursuant to H.B. 3121 (77th Tex. Legislature, 2001) establishing an appeals process for use determinations and the Commission rules implementing the legislation.[1]

In 1993, the citizens of Texas voted to adopt a tax measure called Proposition 2 (Prop 2). Prop 2 was implemented when Article 8, § 1-l was added to the Texas Constitution on November 2, 1993. The amendment allowed the legislature to "exempt from ad valorem taxation all or part of real and personal property used, constructed, acquired, or installed wholly or partly to meet or exceed rules or regulations adopted by any environmental protection agency of the United States, this state, or a political subdivision of this state for the prevention, monitoring, control, or reduction of air, water, or land pollution."[2]

The Texas Legislature codified the constitutional amendment in 1993 as TEX. TAX CODE § 11.31 (effective January 1, 1994). The statutory language in the codified version mirrored the language of Article 8, § 1-l. The statute sets up a two-step process to obtain tax exemption for pollution control property. First, a person seeking tax exemption for pollution control property must obtain a positive use determination from the Executive Director that the property is used wholly or partly for pollution control.[3] Second, once a person obtains a positive use determination from the Executive Director, the person then applies to the appraisal district where the property is located to receive the actual tax exemption. It is the performance of this second step by the chief appraiser that removes the property from the tax roll.[4]

In 2001, the legislature amended Section 11.31 when it passed House Bill 3121 (effective September 1, 2001). This bill added several procedural requirements to Section 11.31, including a provision requiring the establishment and implementation of a process to appeal use determinations.[5] The amendment authorized the Commission to adopt rules establishing specific standards for the Executive Director to follow in making use determinations for property that qualified for either full or partial determinations.[6]

In 2007, the legislature amended Section 11.31 when it passed House Bill 3732 (effective September 1, 2007).[7] The amendment added three new subsections to Section 11.31 by requiring the:

- Commission to adopt, by rule, a list of pollution control property which must include the 18 categories of equipment outlined in HB 3732;

---

[1] See TEX. TAX CODE § 11.31 and 30 TEX. ADMIN. CODE § 17.25.
[2] TEX. CONST. art. 8, § 1-l(a) (November 2, 2002).
[3] TEX. TAX CODE § 11.31(c) & (d).
[4] TEX. TAX CODE § 11.31(i).
[5] See TEX. TAX CODE § 11.31(e).
[6] TEX. TAX CODE § 11.31(g).
[7] House Bill 3732 (80th Legislature, 2007).

- Commission to adopt a procedure to review the list at least once every three years and allows the removal of items from the list when there is compelling evidence that the item does not provide pollution control; and

- Executive Director to review applications containing only items on the adopted list, and to issue a determination without regard to the information provided in response to Section 11.31(c)(1) within 30 days of receipt of the required application documents.[8]

On January 16, 2008, the Commission adopted rules implementing HB 3732.[9] The adopted rules include the "Equipment and Categories List" (ECL).[10] Part B of the ECL consists of the 18 categories of equipment listed by the legislature in HB 3732.[11] The rules revised the review standards contained in Section 17.15 by creating a revised "Decision Flow Chart" and adopting a new "Part B Decision Flow Chart."[12] The rules created a new Tier level of application (Tier IV) for the categories of equipment contained in Part B of the ECL.[13] The use determinations subject to these appeals were filed as Tier IV applications under the newly adopted rules.

Appeals under 30 TEX. ADMIN. CODE § 17.25 may be filed by either the applicant seeking the determination, or by the chief appraiser of the tax appraisal district affected by the determination.[14] The appeal must be in writing and filed within 20 days of receipt of the use determination letter.[15] The Applicant is presumed to have received notice of the determination on the "third regular business day after the date the notice of the Executive Director's action is mailed by first class mail."[16] The appellant is required by Section 17.25(b)(5) to explain the basis for the appeal. Under Section 11.31(i), "the chief appraiser shall accept a final determination by the executive director as conclusive evidence that the facility, device, or method is used wholly or partly as pollution control property."

II.

PROCEDURAL BACKGROUND

Tenaska Gateway Partners, Ltd – Rusk County (Use Determination Number 07-11914)

On March 14, 2008, Tenaska filed a Tier IV application with the Executive Director seeking a use determination under Section 11.31 of the Texas Tax Code for 3 Heat Recovery Steam Generators (HRSG) and 1 enhanced steam turbine. Tenaska claimed the devices were installed to control Nitrogen Oxides (NO_x) and cited 40 C.F.R § 60.44Da and 30 TEX. ADMIN. CODE § 117.3010 as the rules it is meeting or exceeding by installing the devices. The application was

[8] Id. See also, 33 Tex.Reg 932, 933 (February 1, 2008).
[9] 33 Tex.Reg 932 (February 1, 2008). The rules became effective on February 7, 2008.
[10] 33 Tex.Reg at 956; and 30 TEX.ADMIN. CODE 17.14(a) (Effective February 7, 2008). Unless otherwise specifically stated, all references to 30 TAC Chapter 17 refer to the rules effective February 7, 2008.
[11] 33 Tex.Reg at 967; and 30 TEX.ADMIN. CODE 17.14(a).
[12] 30 TEX.ADMIN. CODE 17.15(a) and (b).
[13] 30 TEX.ADMIN. CODE 17.2(16).
[14] TEX. TAX CODE § 11.31(e); and 30 TEX. ADMIN. CODE § 17.25(a)(2).
[15] 30 TEX. ADMIN. CODE § 17.25(b)
[16] Id.

declared to be administratively complete on April 8, 2008. The technical review of the application was completed on May 1, 2008. On May 1, 2008, the Executive Director issued a 100% positive use determination for the HRSGs and a negative use determination for the enhanced steam turbine. Rusk County Appraisal District filed a timely appeal on May 19, 2008. On May 27, 2008, Wayne Frazell (with Pritchard & Abbott, Inc.) filed "detailed comments" on behalf of Rusk County Appraisal District, explaining its reasons for appeal. A copy of the application, administrative review documents, technical review documents, and use determination letter are attached herein as **ED's Exhibit 1**.

Freestone Power Generation L.P – Freestone County (Use Determination Number 07-11966)

On March 28, 2008, Freestone filed a Tier IV application with the Executive Director seeking a use determination under Section 11.31 of the Texas Tax Code for 4 HRSGs, 2 steam turbines, and support systems. Freestone claimed the devices were installed to control Nitrogen Oxides (NO_x) and cited 40 C.F.R § 60.44Da and 30 TEX. ADMIN. CODE § 106.512 as the rules it is meeting or exceeding by installing the devices. The application was declared to be administratively complete on April 8, 2008. The technical review of the application was completed on May 1, 2008. On May 1, 2008, the Executive Director issued a 100% positive use determination for the HRSGs and a negative use determination for the steam turbines, and support systems. Freestone Central Appraisal District filed a timely appeal on May 16, 2008. On May 27, 2008, Wayne Frazell (with Pritchard & Abbott, Inc.) filed "detailed comments" on behalf of Freestone County Appraisal District explaining the its reasons for appeal. A copy of the application, administrative review documents, technical review documents, and use determination letter are attached herein as **ED's Exhibit 2**.

Borger Energy Associates, LP – Hutchinson County (Use Determination Number 07-11971)

On March 31, 2008, Borger filed a Tier IV application with the Executive Director seeking a use determination under Section 11.31 of the Texas Tax Code for 2 HRSGs. Borger claimed the devices were installed to control Nitrogen Oxides (NO_x) and cited 40 C.F.R § 60.44Da and 30 TEX. ADMIN. CODE § 106.512 as the rules it is meeting or exceeding by installing the devices. The application was declared to be administratively complete on April 8, 2008. The technical review of the application was completed on May 1, 2008. On May 1, 2008, the Executive Director issued a 100% positive use determination for the HRSGs. Hutchinson County Appraisal District filed a timely appeal on May 16, 2008. On May 27, 2008, Wayne Frazell (with Pritchard & Abbott, Inc.) filed "detailed comments" on behalf of Hutchinson County Appraisal District explaining the its reasons for appeal. A copy of the application, administrative review documents, technical review documents, and use determination letter are attached herein as **ED's Exhibit 3**.

Brazos Valley Energy L.P – Fort Bend County (Use Determination Number 0711969)

On March 28, 2008, Brazos filed a Tier IV application with the Executive Director seeking a use determination under Section 11.31 of the Texas Tax Code for 2 HRSGs and 1 steam turbine. Brazos claimed the devices were installed to control Nitrogen Oxides (NO_x) and cited 40 C.F.R §

60.44Da and 30 TEX. ADMIN. CODE § 106.512 as the rules it is meeting or exceeding by installing the devices. The application was declared to be administratively complete on April 8, 2008. The technical review of the application was completed on May 1, 2008. On May 1, 2008, the Executive Director issued a 100% positive use determination for the HRSGs and a negative use determination for the steam turbine. Fort Bend Central Appraisal District filed a timely appeal on May 21, 2008. A copy of the application, administrative review documents, technical review documents, and use determination letter are attached herein as **ED's Exhibit 4**.

Freeport Energy Center, L.P – Brazoria County (Use Determination Number 07-11994)

On April 3, 2008, Freeport filed a Tier IV application with the Executive Director seeking a partial use determination under Section 11.31 of the Texas Tax Code for 1 HRSG, 1 steam turbine, and condenser and ancillary pump systems. Freeport claimed the devices were installed to control Nitrogen Oxides (NO_x) and cited 40 C.F.R § 60.44Da as the rule it is meeting or exceeding by installing the devices. The application was declared to be administratively complete on April 8, 2008. The technical review of the application was completed on May 1, 2008. On May 1, 2008, the Executive Director issued a 100% positive use determination for the HRSG and a negative use determination for the steam turbine, and condenser and ancillary pump systems. Brazoria County Appraisal District filed a timely appeal on May 21, 2008. A copy of the application, administrative review documents, technical review documents, and use determination letter are attached herein as **ED's Exhibit 5**.

Navasota Wharton Energy Partners, LP – Wharton County (Use Determination Number 07-11926)

On March 19, 2008, Navasota filed a Tier IV application with the Executive Director seeking a use determination under Section 11.31 of the Texas Tax Code for 4 HRSGs and 2 steam turbines. Navasota claimed the devices were installed to control Nitrogen Oxides (NO_x) and cited 40 C.F.R § 60.44Da and 30 TEX. ADMIN. CODE § 106.512 as the rules it is meeting or exceeding by installing the devices. The application was declared to be administratively complete on April 8, 2008. The technical review of the application was completed on May 1, 2008. On May 1, 2008, the Executive Director granted a 100% positive use determination for the HRSGs and a negative use determination for the steam turbines. Wharton County Appraisal District filed a timely appeal on May 21, 2008. A copy of the application, administrative review documents, technical review documents, and use determination letter are attached herein as **ED's Exhibit 6**.

III.

HRSGs and CALCULATION OF POLLUTION CONTROL PERCENTAGE

The properties involved in these appeals are HRSGs and steam turbines used at combined-cycle facilities to generate electricity. The Tier IV applications were submitted under Part B-8 of the ECL for HRSGs and Part B-10 of the ECL for steam turbines. The appeals challenge only the Executive Director's determinations granting 100% Tier IV positive use determinations for the HRSGs. The Executive Director's determinations regarding the steam turbines were not appealed.

Since the enactment of HB 3732, the Executive Director has received approximately thirty seven Tier IV use determination applications for HRSGs and steam turbines installed at combined-cycle electric generation facilities. The Executive Director has issued 100% positive use determinations for twenty six HRSGs. Six out of the twenty six use determinations were appealed by the affected appraisal districts, and all six are the subject of the instant appeals. There are currently eleven applications awaiting determinations.

Under TCEQ rules, an applicant for a Tier IV use determination is required to calculate the use determination for the equipment or categories of equipment included in the application. "It is the responsibility of the applicant to propose a reasonable method for determining the use determination percentage. It is the responsibility of the executive director to review the proposed method and make the final determination."[17] The challenge with most Tier IV applications including those involved in these appeals is the calculation of the use determination percentage for each category of equipment. A description of the functions performed by a HRSG will help explain why the calculation methodologies vary from one application to another.

A HRSG acts as a fuel substitute in a typical combined-cycle installation. A typical HRSG captures hot exhaust gases from a combustion turbine. The resulting heat is converted "into high pressure and temperature steam" which is used to propel a steam turbine to generate electrical energy.[18] This process eliminates the need for the additional burning of coal or other hydrocarbon based fuel in order to obtain the same increase in electrical energy generation output at the site. Installation of a HRSG in a combined-cycle facility "allows more electrical energy to be produced for a given heat input" compared to a "simple cycle or traditional steam boiler/turbine (Rankine cycle) configuration."[19]

Calculation Methodologies Provided in the Respective Applications:

Tenaska Gateway: Tenaska proposed a calculation based on comparing a single cycle plant with a selective catalytic reduction (SCR) system installed to control NO_x to a combined-cycle plant with an HRSG installed to boost efficiency with less NO_x emissions. Based on this premise, Tenaska claimed that it merely substituted a HRSG in a combined-cycle plant for an SCR in a single cycle plant. As a result, Tenaska wanted a use determination percentage that reflected the total capital cost of the hypothetical SCR that it did not install. The arithmetic and method of calculation is best expressed on pages 5-6 of the application.[20]

---

[17] 30 TEX. ADMIN. CODE § 17.17(d).

[18] Yongjun Zhao, Hongmei Chen, Mark Waters, and Dimitri N. Mavris; "Modeling and Cost Optimization of Combined Cycle Heat Recovery Generator Systems" (Proceedings of ASME Turbo Expo 2003 - Power of Land, Sea, and Air, GT2003-38568, June 16-19, 2003). See also, Application for Use Determinations filed by Ennis-Tractebel Power Company, LP).

[19] Id. A single-cycle or simple-cycle power plant uses a "fuel-fired turbine" to generate electricity. A combined-cycle power plant combines "gas turbine engine" with a heat recovery steam generator and a steam turbine system to generate electricity. Single-cycle facilities are only able to utilize a portion of the heat that the combustion of their fuel generates. The excess heat generated from combustion is generally wasted in a single cycle facility. The HRSGs at combined-cycle facilities recapture that waste heat, and use it to make steam to generate electricity; thereby, improving overall efficiency. See Footnote 18 ("Modeling and Cost Optimization of Combined Cycle Heat Recovery Generator Systems").

[20] See ED's Exhibit 1 (Application for Tier IV use determination submitted by Tenaska Gateway Partners, Ltd.).

The problems with this calculation are as follows. First, the cost of the steam turbine which is not a pollution control property was factored into the calculation. Second, HRSGs and SCRs are totally different mechanisms. The latter is a known and acceptable pollution control device, which may still be installed somewhere in the plant to control pollution. Once installed, Tenaska can apply and receive a use determination for it. Third, SCRs are custom-built for each facility. Choosing and using an average cost, as Tenaska did, does not come close to reflecting the actual value of a SCR that would be installed if there was a need to install one. Fourth, the calculation removes the focus of the evaluation from the purported pollution control property, and places it on another unrelated property. The calculation is not based on the equipment for which use determination is sought. Finally, it is impossible to apply the review standards, particularly the Decision Flow Charts, using this calculation methodology.

Freeport Energy: Freeport requested a 98% partial use determination for replacing an old power generation plant with a combined-cycle plant using an HRSG. Freeport based its proposed calculation on the NO_x reduction achieved by the new plant. Freeport claimed that NO_x emissions were reduced from 147ppm (old plant) to 3ppm (new plant). The partial percentage calculation based on reduction in NO_x emissions was 98% of the total cost of installation of the HRSG, steam turbine, and condenser and ancillary pump system. The method of calculation is best expressed on pages 5-6 of the application.[21]

The problems with this calculation are as follows. First, the cost of the steam turbine, condenser and ancillary pump system which are not pollution control properties are factored into the calculation. Second, the calculation removes the focus of the evaluation from the purported pollution control equipment, and places it on NO_x emissions. The calculation is not based on the equipment for which use determination is sought. Third, the calculation is based on the cost of the entire facility rather than the cost of the HRSG. Finally, it is impossible to apply the review standards, particularly the Decision Flow Charts, using this calculation methodology.

Freestone Power Generation: Freestone proposed a use determination percentage calculation based on "avoided emissions." This "approach relies on thermal output differences between a conventional power generation system and the combined-cycle system."[22] This approach "utilized output-based NO_x allocation method for both power generation projects."[23] The method of calculation is best expressed on Schedule A, and pages 11-12 of the application.[24]

The problems with this calculation are as follows. First, the cost of the entire facility was used in the calculation. Second, the cost of the steam turbines and supporting systems which are not pollution control properties are factored into the calculation. Third, the calculation removes the focus of the evaluation from the purported pollution control property and places it on NO_x emissions output. The calculation is not based on the devices for which use determinations are sought. Fourth, the calculation is based on several assumptions, none of which reflect the pollution control properties at issue in this case. Finally, it is impossible to apply the review

[21] See ED's Exhibit 5 (Application for Tier IV use determination submitted by Freeport Energy Center, L.P.).
[22] See ED's Exhibit 2 (Application for Tier IV use determination submitted by Freestone Power Generation, L.P.).
[23] Id.
[24] Id.

standards, particularly the Decision Flow Charts, using this calculation methodology. Finally, as a result of the flawed assumptions, the use of the total cost of the facility, and the use of the total cost of the HRSGs and steam turbines, the applicant came up with a pollution control percentage of 384%.

Borger Energy: Like Freestone, Borger proposed a use determination percentage calculation based on "avoided emissions." This "approach relies on thermal output differences between a conventional power generation system and the combined-cycle system."[25] The approach "utilized output-based NO_x allocation method for both power generation projects."[26] The method of calculation is best expressed on Schedule A, and pages 7-9 of the application.[27]

The problems with this calculation are as follows. First, the cost of the entire facility was used in the calculation. Second, the calculation removes the focus of the evaluation from the purported pollution control properties and places it on NO_x emissions output. The calculation is not based on the devices for which use determinations are sought. Third, the calculation is based on several assumptions, none of which reflect the pollution control properties at issue in this case. Fourth, it is impossible to apply the review standards, particularly the Decision Flow Charts, using this calculation methodology. Finally, as a result of the flawed assumptions and the use of the total cost of the facility, the applicant came up with a pollution control percentage of 128.6%.

Brazos Valley Energy: Brazos proposed a pollution control percentage calculation based on "avoided emissions." This "approach relies on thermal output differences between a conventional power generation system and the combined-cycle system."[28] The approach "utilized output-based NOx allocation method for both power generation projects."[29] The method of calculation is best expressed on Schedule A, and pages 9-10 of the application.[30]

The problems with this calculation are as follows. First, the cost of the entire facility was used in the calculation. Second, the cost of the steam turbines and supporting systems which are not pollution control devices are factored into the calculation. Third, the calculation removes the focus of the evaluation from the purported pollution control properties and places it on NOx emissions output. The calculation is not based on the devices for which use determinations are sought. Fourth, the calculation is based on several assumptions, none of which reflects the pollution control properties at issue in this case. Fifth, it is impossible to apply the review standards, particularly the Decision Flow Charts, using this calculation methodology. Finally, as a result of the flawed assumptions, the use of the total cost of the facility, and the use of the total cost of the HRSGs and steam turbine, the applicant came up with a pollution control percentage of 248.7%.

Navasota Energy: Navasota proposed a pollution control percentage calculation based on "avoided emissions." This "approach relies on thermal output differences between a

---

[25] See ED's Exhibit 3 (Application for Tier IV use determination submitted by Borger Energy Associates, LP.).
[26] Id.
[27] Id.
[28] See ED's Exhibit 4 (Application for Tier IV use determination submitted by Brazos Valley Energy, L.P.).
[29] Id.
[30] Id.

conventional power generation system and the combined-cycle system."[31] The approach "utilized output-based NO_x allocation method for both power generation projects."[32] The method of calculation is best expressed on Schedule A, and pages 9-10 of the application.[33]

The problems with this calculation are as follows. First, the cost of the entire facility was used in the calculation. Second, the cost of the steam turbines and supporting systems which are not pollution control devices are factored into the calculation. Third, the calculation removes the focus of the evaluation from the purported pollution control properties and places it on NO_x emissions output. The calculation is not based on the devices for which use determinations are sought. Fourth, the calculation is based on several assumptions, none of which reflects the pollution control properties at issue in this case. Fifth, it is impossible to apply the review standards, particularly the Decision Flow Charts, using this calculation methodology. Finally, as a result of the flawed assumptions, the use of the total cost of the facility, and the use of the total cost of the HRSGs and steam turbine, the applicant came up with a pollution control percentage of 164%.

The pollution control percentages and the methods of calculation used by the applicants vary considerably. The following are examples of the percentages derived by using the avoided emissions calculation:

Applicant	Calculation Method	Pollution Control %
Channel Energy	Avoided emission based on No_x Output	366.1%
Pasadena Cogeneration	Avoided emission based on No_x Output	165%
TH Wharton	Avoided emission based on No_x Output	398.3%
Cedar Bayou 4	Avoided emission based on No_x Output	225.9%
Mustang Units 1, 2, &3	Avoided emission based on No_x Output	142.18%
Calpine Baytown	Avoided emission based on No_x Output	298.75%
Deer Park Energy	Avoided emission based on No_x Output	503.55%
Magic Valley	Avoided emission based on No_x Output	263.55%
FPL Forney	Avoided emission based on No_x Output	213.64%

Based on various calculations and initial research by staff, the Executive Director allowed 100% positive use determination for the first set of applications adjudicated. Subsequently, the Executive Director received new applications, with varying use determination percentages. The Executive Director then decided to develop a consistent and uniform use determination percentage for HRSGs.

[31] See ED's Exhibit 6 (Application for Tier IV use determination submitted by Navasota Wharton Energy Partners, LP.).
[32] Id.
[33] Id.

IV.

THE WORKGROUP AND EXECUTIVE DIRECTOR'S RECOMMENDATION

Faced with the difficulties of coming up with a reasonable use determination percentage for HRSGs, the Executive Director assembled a Workgroup to gather information that would lead to the development of a uniform use determination percentage for the equipment. The Workgroup was attended by applicants or their representatives whose use determinations are currently pending on appeal; applicants or their representatives whose use determination applications are currently pending in-house; appraisal districts and their representatives; and environmental and public interest groups. The Workgroup met twice and provided input to the Executive Director on this issue. Based on staff research and input from the Workgroup, the following conclusions were made:

1. A comparable combined cycle power plant produces less air emissions than the same size simple cycle power plant. The reduced emissions are attributed to reduced combustion. The installation of the HRSGs lead to the reduced emissions.

2. The steam turbine systems are used solely to produce electricity. As 100% production equipment the steam turbine systems are not eligible for a positive use determination.

3. The pollution control aspect of the combined cycle plant relates solely to the installation of the HRSGs. However, installation of HRSG also results in increased efficiency and production gain.

The Executive Director reviewed several calculation methodologies provided in different applications and at the Workgroup meetings; calculations provided by Wayne Frazell, with Pritchard & Abbott; and comments and suggestions made by Workgroup participants. The goal was to assign an appropriate percentage to the pollution control aspect of the HRSGs, while taking into account the production gain associated with their installation. Of all the calculations reviewed, the method furnished by Cummings Westlake, LLC, representing Ennis-Tractebel Power Company, comes the closest to providing the appropriate use determination percentage for HRSGs.

The Executive Director is therefore recommending the following modified version of the calculation presented by Cummings Westlake:

> A HRSG acts as a fuel substitute in a combined cycle installation. A typical HRSG captures hot exhaust gases from a combustion turbine. The resulting heat is converted "into high pressure and temperature steam" which is used to propel a steam turbine to generate electrical energy.[34] This process eliminates the need for the additional burning of coal or other hydrocarbon based fuel in order to obtain

[34] Yongjun Zhao, Hongmei Chen, Mark Waters, and Dimitri N. Mavris; "Modeling and Cost Optimization of Combined Cycle Heat Recovery Generator Systems" (Proceedings of ASME Turbo Expo 2003 - Power of Land, Sea, and Air, GT2003-38568, June 16-19, 2003). See also, Application for Use Determinations filed by Ennis-Tractebel Power Company, LP).

the same increase in electrical energy generation output at the site. Installation of a HRSG in a combined cycle facility "allows more electrical energy to be produced for a given heat input" compared to a "simple cycle or traditional steam boiler/turbine (Rankine cycle) configuration."[35] The thermal efficiency increase or production gain derived from the installation of a HRSG is approximately 39%. Since this percentage represents the additional amount of electrical energy produced for a given heat input, it therefore represents the production value of the equipment. Based on this production value, the pollution control percentage of a HRSG installed at a combined-cycle facility is 61%. **Staff is therefore recommending a positive use determination of 61% for the installation of a HRSG in a combined cycle facility.**

Under this method, a HRSG would exit the "Decision Flow Chart" at box 7 and requires the application of "Part B Decision Flow Chart."[36] HRSG provides environmental benefit at the site under box 2 of the Part B Decision Flow Chart by acting as fuel substitute, capturing exhaust gases which would have been emitted into the air at the site, and eliminates the need for the additional burning of hydrocarbon-based fuel to obtain the same increase in electrical energy generation at the site. The HRSGs involved in the instant appeals were installed in order to meet or exceed an environmental rule adopted to control NO_x emissions.[37]

V.

CONCLUSION

The Executive Director requests that the Commission adopt the recommendation of the Executive Director on the proper pollution control percentage for HRSGs installed at combined-cycle facilities. Should the Commission choose to adopt the Executive Director's recommendation, the Executive Director intends to apply the adopted recommendation to all subsequently filed similar use determination applications, and to those applications currently pending adjudication.

---

[35] Id.
[36] 30 TEX. ADMIN. CODE § 17.15(a); and 30 TEX. ADMIN. CODE § 17.15(b).
[37] See 40 C.F.R § 60.44Da; and 30 TEX. ADMIN. CODE § 106.512.

The Executive Director respectfully requests that the Commission remand use determination numbers 07-1194, 07-11966, 07-11971, 07-11969, 07-11994, and 07-11926, to the Executive Director to issue revised use determinations consistent with the adopted recommendation.

Respectfully submitted,

TEXAS COMMISSION ON ENVIRONMENTAL QUALAITY

Mark R. Vickery, P.G., Executive Director

Stephanie Bergeron Perdue,
Deputy Director Office of Legal Services

Robert Martinez, Director
Environmental Law Division

D. A. Chris Ekoh, Staff Attorney
Environmental Law Division
Texas Bar No. 06507015

Timothy Reidy, Staff Attorney
Environmental Law Division
Texas Bar No. 24058069

P.O. Box 13087, MC 173
Austin, Texas 78711-3087
Telephone No. (512) 239-5487
Facsimile No. (512) 239-0606
REPRESENTING THE EXECUTIVE DIRECTOR, TEXAS COMMISSION ON ENVIRONMENTAL QUALITY

CERTIFICATE OF SERVICE

I certify that on December 3, 2008, the original and 7 copies of the Executive Director's Response to Rusk County, Freestone Central, Hutchinson County, Fort Bend Central, Brazoria County, and Wharton County Appraisal Districts' Appeals of the Executive Director's use determinations was filed with the Office of the Chief Clerk, Texas Commission on Environmental Quality, and was served by first-class mail, agency mail, or facsimile to all persons on the attached mailing list.

D. A. Chris Ekoh, Staff Attorney
Environmental Law Division
Texas Commission on Environmental Quality

MAILING LIST
TCEQ Docket Numbers
2008-0830-MIS-U (UD 07-11914/Tenaska Gateway Partners, Ltd – Rusk County)
2008-0831-MIS-U (UD 07-11966/Freestone Power Generation, L.P. – Freestone County)
2008-0832-MIS-U (UD 07-11971/Borger Energy Associates, LP – Hutchinson County)
2008-0849-MIS-U (UD 07-11969/Brazos Valley Energy, L.P. – Fort Bend County)
2008-0850-MIS-U (UD 07-11994/Freeport Energy Center, L.P. – Brazoria County)
2008-0851-MIS-U (UD 07-11926/Navasota Wharton Energy Partners, LP – Wharton County)

Terry W. Decker, RPA/CCA/RTA
Chief Appraiser
Rusk County Appraisal District
P. O. Box 7
Henderson, Texas 75653-0007
903/657-3578 Fax 903/657-9073

David Johnson
Tenaska, Inc.
1044 N. 115th St., Suite 400
Omaha, Nebraska 68154-4446

Bud Black, RPA/CTA
Chief Appraiser
Freestone Central Appraisal District
218 North Mount
Fairfield, Texas 75840
903/389-5510 Fax 903/389-5955

Freestone Power Generation L.P.
717 Texas, Suite 1000
Houston, Texas 77002

Greg Maxim
Duff & Phelps LLC
919 Congress Ave., Suite 1450
Austin, Texas 78701
512/671-5580 Fax 512/671-5501

Pritchard & Abbott, Inc.
Attn: Mr. C. Wayne Frazell
4900 Overton Commons Court
Fort Worth, Texas 76132-3687
817/926-7861 Fax 817/927-5314

Diana Hooks, RPA/RTA
Chief Appraiser
Hutchinson County Appraisal District
P. O. Box 5065
Borger, Texas 79008-5065
806/274-2294 Fax 806/273-3400

Borger Energy Associates, LP
7001 Boulevard 26, Suite 310
North Richland Hills, Texas 76180

Dennis Deegear
Duff & Phelps LLC
919 Congress Ave., Suite 1450
Austin, Texas 78701
512/671-5523 Fax 512/671-5501

Glen Whitehead, RPA
Chief Appraiser
Fort Bend County Central Appraisal District
2801 B. F. Terry Blvd.
Rosenberg, Texas 77471-5600
281/344-8623 Fax 281/344-8632

Brazos Valley Energy. L.P.
717 Texas, Suite 1000
Houston, Texas 77002

Hugh L. Landrum & Associates
Attn: Mr. Hugh L. Lundrum, Jr.
12621 Featherwood, Suite 325
Houston, Texas 77034
281/484-7000 Fax 281/484-7272

Cheryl Evans
Chief Appraiser
Brazoria County Appraisal District
500 North Chenango
Angleton, Texas 77515
979/849-7792 Fax 979/849-7984

Freeport Energy Center, LP
4100 Underwood Road
Pasadena, Texas 77507

Justin Hyland
Leo Scherrer
Calpine/Dow
717 Texas Ave.
Houston, Texas 77002
713/830-8873 Fax 713/830-8670

Tylene Gamble
Chief Appraiser
Wharton County Appraisal District
2407½ N. Richmond Road
Wharton, Texas 77488
979/532-8931 Fax 979/532-5691

Navasota Wharton Energy Partners, LP
403 Corporate Woods
Magnolia, Texas 77354

Stephanie Bergeron Perdue
Deputy Director
TCEQ Office of Legal Services (MC 173)
P. O. Box 13087
Austin, Texas 78711-3087
512/239-0600 Fax 512/239-0606

D. A. Chris Ekoh
TCEQ Environmental Law Division (MC 173)
P. O. Box 13087
Austin, Texas 78711-3087
512/239-5487 Fax 512/239-0606

Tim Reidy
TCEQ Environmental Law Division (MC 173)
P. O. Box 13087
Austin, Texas 78711-3087
512/239-5487 Fax 512/239-0606

Ron Hatlett
TCEQ SBEA (MC 110)
P. O. Box 13087
Austin, Texas 78711-3087
512/239-3100 Fax 512/239-3165

Blas Coy
TCEQ Office of Public Interest Counsel (MC 103)
P. O. Box 13087
Austin, Texas 78711-3087
512/239-6363 Fax 512/239-6377

Docket Clerk
TCEQ Office of the Chief Clerk (MC 105)
P. O. Box 13087
Austin, Texas 78711-3087
512/239-3300 Fax 512/239-3311

Bridget Bohac
TCEQ Office of Public Assistance (MC 108)
P. O. Box 13087
Austin, Texas 78711-3087
512/239-4000 Fax 512/239-4007

Minor Hibbs
TCEQ Chief Engineers Office (MC 168)
P.O. Box 13087
Austin, Texas 78711-3087
512/239-1795 Fax 512/239-1794

Executive Director's Exhibit 1

Tenaska: Application and Use Determination Documents

829001 EIP

TEXAS COMMISSION ON ENVIRONMENTAL QUALITY
APPLICATION FOR USE DETERMINATION FOR POLLUTION CONTROL PROPERTY

TEXAS COMMISSION ON ENVIRONMENTAL QUALITY

2008 MAY 23 AM 8: 43

CHIEF CLERKS OFFICE

The TCEQ has the responsibility to determine whether a property is a pollution control property. A person seeking a use determination must complete the attached application or a copy or similar reproduction. For assistance in completing this form refer to the TCEQ guidelines document, *Property Tax Exemptions for Pollution Control Property*, as well as 30 TAC §17, rules governing this program. For additional assistance please contact the Tax Relief for Pollution Control Property Program at 239-3100. The application should be completed and mailed, along with a complete copy and the appropriate fee, to: TCEQ MC-214, Cashiers Office, PO Box 13088, Austin, Texas 78711-3088.

Information must be provided for each field unless otherwise noted.

1. GENERAL INFORMATION

A. What is the type of ownership of this facility?

- ☐ Corporation
- ☐ Partnership
- ☒ Limited Partnership
- ☐ Sole Proprietor
- ☐ Utility
- ☐ Other:

B. Size of company: Number of Employees

- ☒ 1 to 99
- ☐ 100 to 499
- ☐ 500 to 999
- ☐ 1,000 to 1,999
- ☐ 2,000 to 4,999
- ☐ 5,000 or more

C. Business Description: (Provide a brief description of the type of business or activity at the facility)

Electric Generation

2. TYPE OF APPLICATION

- ☐ Tier I $150 Fee
- ☐ Tier II $1,000 Fee
- ☐ Tier III $2,500 Fee
- ☒ Tier IV $500 Fee

NOTE: Enclose a check, money order to the TCEQ, or a copy of the ePay receipt along with the application to cover the required fee.

3. NAME OF APPLICANT

A. Company Name:	Tenaska Gateway Partners, Ltd.
B. Mailing Address (Street or P.O. Box):	1044 N. 115 Street, Suite 400
C. City, State, and Zip	Omaha, NE 68154-4446

4. PHYSICAL LOCATION OF PROPERTY REQUESTING A TAX EXEMPTION

A. Name of Facility or Unit:	Tenaska Gateway Generating Station
B. Type of Mfg. Process or Service:	Natural Gas- Fueled, Combined-Cycle Generation
C. Street Address:	SH 315
D. City, State, and Zip:	Mt. Enterprise, Texas 75681-0697
E. Tracking Number (*Optional*):	GATEWAY-2008-1
F. Company or Registration Number (*Optional*):	

5. APPRAISAL DISTRICT WITH TAXING AUTHORITY OVER PROPERTY

A. Name of Appraisal District:	Rusk County Appraisal District
B. Appraisal District Account Number:	

2_ 11/14

6. CONTACT NAME

A. Company/Organization Name	Tenaska, Inc.
B. Name of Individual to Contact:	David D. Johnson
C. Mailing Address (Street or P.O. Box):	1044 N. 115 Street, Suite 400
D. City, State, and Zip:	Omaha, NE 68154-4446
E. Telephone number and fax number:	Tel:(402)691-9533 Fax:(402) 691-9552
F. E-Mail address (if available):	

7. RELEVANT RULE, REGULATION, OR STATUTORY PROVISION

For each media, please list the specific environmental rule or regulation that is met or exceeded by the installation of this property.

MEDIUM	Rule/Regulation/Law
Air	Title 40 of the Code of Federal Regulations, Chapter 1, Subchapter C, Part 60, Subpart D, Section 60.44a ("40 CFR 60.44Da") Title 30 of the Texas Administrative Code, Part 1, Chapter 117,Subchapter E, Division 1, Rule 117.3010 ("30 TAC 117.3010")
Water	
Waste	

8. DESCRIPTION OF PROPERTY (Complete for all applications)

Describe the property and how it will be used at your facility. **Do not simply repeat the description from the Equipment & Categories List.** Include sketches of the equipment and flow diagrams of the processes where appropriate. Use additional sheets, if necessary.

Heat Recovery Steam Generators and Enhanced Steam Turbine
Tier IV

Statutes and Regulations

40 CFR 60.44Da establishes standards of performance for NOx for electric utility steam generating units for which construction commenced after September 18, 1978. 30 TAC 117.3010 establishes emissions specifications for NOx for utility electric generation in East and Central Texas, which includes Rusk County.

Property/Equipment Description

The Tenaska Gateway Generating Station (the Plant) is an 845 MW (nominal net capacity) natural gas-fueled, combined-cycle electric generating station. The Plant is a combined-cycle facility including three 170 Megawatt (MW) combustion turbine generators coupled with three thermally efficient heat recovery steam generators (HRSGs) and a single 335 MW steam turbine.

A combined cycle facility consists of one or more gas and steam turbines. The air expansion that occurs during the combustion process turns the gas turbine that drives the generator to produce electricity. The combustion in the gas turbine also produces a hot exhaust gas. In a combined cycle unit the heat produced during the combustion of natural gas is directed to the HRSG to generate steam used to turn a steam turbine. Therefore, both the gas and steam turbines generate electricity, achieving efficiencies of up to 55%. [1]

[1] Bay Area 2005 Ozone Strategy
[2] EPA-452/F-03-022

A simple-cycle plant contains gas turbines without HRSGs or steam turbines. The air expansion that occurs during the combustion process turns the turbine that drives the generator to produce electricity and produces a hot exhaust gas.

One of the benefits of a combined cycle facility is lower NOx emissions per Megawatt-hour (MWh) generated. Assuming the same MWh production, a NOx pollution control device would have to be installed at simple cycle facility to achieve the lower NOx emissions achieved by a combined cycle process. NOx pollution control devices include selective catalytic reduction systems (SCR). A SCR unit reduces NOx emissions by injecting ammonia into the exhaust stream to react with the nitrous oxides to form nitrogen and water under the presence of a catalyst. The chemical reaction proceeds as follows:

$$6\,NO_2 + 8\,NH_3 \rightarrow 7\,N_2 + 12\,H_2O$$

The SCR unit consists of a catalytic honeycomb structure installed downstream of the combustion turbine prior the main exhaust stack and an ammonia injection skid. For the large 7FA GE turbines, the SCR installed capital costs range from $2,000,000 to $4,500,000 per gas turbine. [1, 2] Based on the literature review, catalyst cost escalation since the publication of the literature, and the physical location of the plant (Rusk County), $4,000,000 per turbine is the estimated cost to install a SCR unit at the Tenaska Gateway Plant.

In the combined-cycle configuration specific to the Plant, the HRSGs and the enhanced steam turbine provide an additional 335 MW capacity without the installation of SCR units to meet the NOx emissions requirements on a lbs-NOx per MW-hour generation basis. The total installed costs of the HRSGs and enhanced steam turbine is $48,038,345.

Comparing the NOx emissions on a MWh basis shows that a simple cycle configuration would yield approximately 66% more NOx. The calculations are demonstrated by the following:

Configuration	MW	Capacity Factor	Calculated MW	Increased NOx Emissions
Combined Cycle	845	1.00	=845	
Simple Cycle	510	1.66	=845	66%

To achieve the reduced NOx emissions demonstrated by the combined cycle configuration, the simple cycle plant must install a SCR. Recognizing that the heat recovery steam generators and subsequent enhanced steam turbines have an economic benefit associated with them, the basis of this application is predicated on a substitution basis. If Tenaska did not install the additional heat recovery equipment, they would have had to install NOx pollution control devices in addition to the existing low NOx burner currently installed. The hypothetical installation of SCR units on each gas turbine would achieve the corresponding NOx emissions reductions. Therefore, this application seeks only the equivalent SCR cost for the exemption value of the HRSG and enhanced steam turbines.

Tenaska Gateway Tier IV Methodology

	Generation / Emission Technology	
	HRSG / Steam Turbine	SCR Technology
HRSG Cost	$34,640,309	-
Enhanced Steam Turbine	13,398,037	-
SCR Equivalent Cost	-	12,000,000
Total Capital Costs	$48,038,346	$12,000,000
Exemption %	25%	100%

The following diagram depicts a normal combined cycle configuration with low NOx combustion system and an SCR controlling the NOx emissions. This diagram is shown to show the normal configuration of a SCR installation.

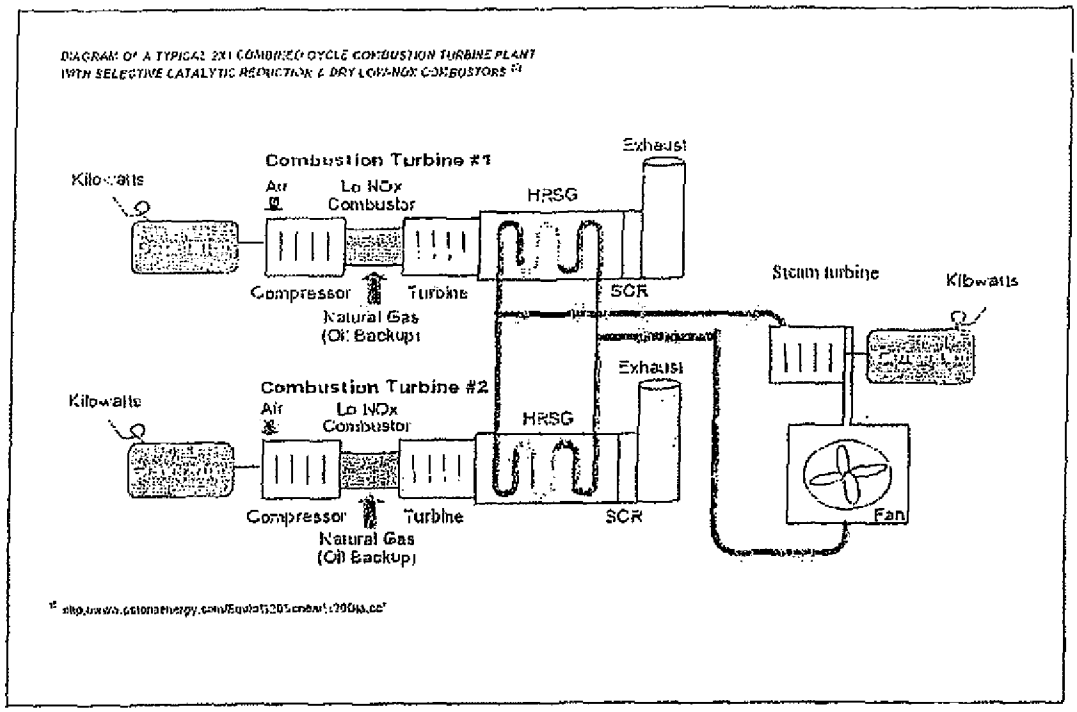

The following diagram depicts a simple cycle power plant with a hypothetical high temperature SCR installed at the heat exhaust point of the simple cycle gas turbines.

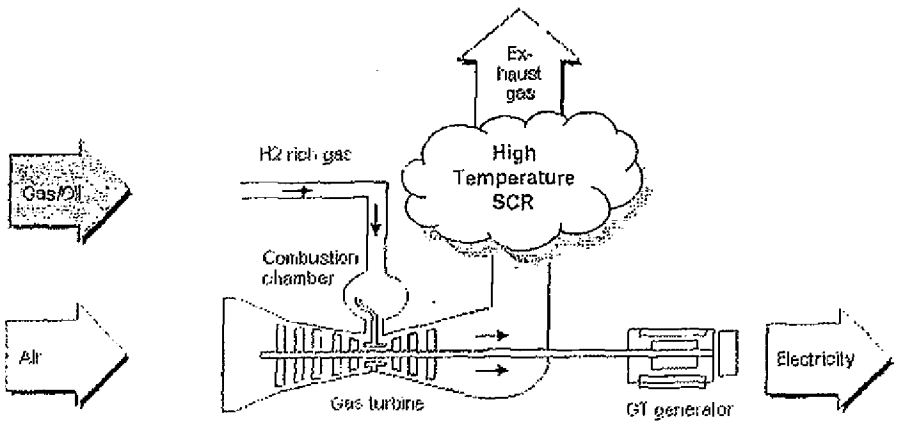

9. PARTIAL PERCENTAGE CALCULATION

This section is to be completed for Tier III and IV applications. For information on how to conduct the partial percentage calculation, see the application instructions document. Attach calculation documents to completed application.

10. PROPERTY CATEGORIES AND COSTS

List each control device or system for which a use determination is being sought. Provide additional attachments for more than 3 properties.

Property	Taxable on 1/01/94?	DFC Box	ECL #	Estimated Cost	Use %
Land					
Property Heat Recovery Steam Generators / Enhanced Steam Turbine	No	B,3	B-8 / B-9	$48,038,346	25%
Totals				$48,038,346	25%

$12 009 587

11. EMISSION REDUCTION INCENTIVE GRANT

(For more information about these grants, see the Application Instruction document).

Will an application for an Emission Reduction Incentive Grant be filed for this property/project?

☐Yes ☒No

12. APPLICATION DEFICIENCIES

After an initial review of the application, the TCEQ may determine that the information provided with the application is not sufficient to make a use determination. The TCEQ may send a notice of deficiency, requesting additional information that must be provided within 30 days of the written notice.

13. FORMAL REQUEST FOR SIGNATURE

By signing this application, you certify that this information is true to the best of your knowledge and belief.

Name: Jerry K. C Date: 3/7/08

Title: Chief Financial Officer of

Company: Tenaska VII, Inc. General Partner of Tenaska VII Partners, L.P. Managing General Partner

Under Texas Penal Code, Section 37.10, if you make a false statement on this application, you could receive a jail term of up to one year and a fine up to $2,000, or a prison term of two to 10 years and a fine of up to $5,000.

14. DELINQUENT FEE/PENALTY PROTOCOL

This form will not be processed until all delinquent fees and/or penalties owed to the TCEQ or the Office of the Attorney General on behalf of the TCEQ are paid in accordance with the Delinquent Fee and Penalty Protocol. (Effective September 1, 2006)

Tax Relief for Pollution Control Property

Application Form – Effective January 2008

DISCLAIMER

This document is intended to assist persons in applying for a use determination, pursuant to Title 30 Texas Administrative Code Chapter 17 (30 TAC 17). Conformance with these guidelines is expected to result in applications that meet the regulatory standards required by the Texas Commission on Environmental Quality (TCEQ). However, the TCEQ will not in all cases limit its approval of applications to those that correspond with the guidelines in this document. These guidelines are not regulation and should not be used as such. Personnel should exercise discretion in using this guidelines document. It should be used along with other relevant information when developing an application.

Buddy Garcia, *Chairman*
Larry R. Soward, *Commissioner*
Bryan W. Shaw, Ph.D., *Commissioner*
Glenn Shankle, *Executive Director*

TEXAS COMMISSION ON ENVIRONMENTAL QUALITY

Protecting Texas by Reducing and Preventing Pollution

March 14, 2008

CHIEF APPRAISER
RUSK COUNTY APPRAISAL DISTRICT
PO BOX 7
HENDERSON TX 75653

This letter is to inform you that a Use Determination Application has been filed by:

TENSKA GATEWAY PARTNERS LTD

for:

TENASKA GATEWAY GENERATION STATION
SH 315, PO BOX 697
MOUNT ENTERPRISE TX 75681-0697

Appraisal District Account Number: **NOT LISTED**

This facility is located in **RUSK** County.

A complete copy of the application is included with this letter. We recommend that a copy of this application be shared with the person who conducts the appraisal of this property.

This application has been assigned a tracking number of 07 -11914. Please contact the Tax Relief for Pollution Control Property Program at (512) 239-3100 if you have any questions.

Sincerely,

Ron Hatlett
Tax Relief for Pollution Control Property Program

Buddy Garcia, *Chairman*
Larry R. Soward, *Commissioner*
Bryan W. Shaw, Ph.D., *Commissioner*
Glenn Shankle, *Executive Director*

TEXAS COMMISSION ON ENVIRONMENTAL QUALITY

Protecting Texas by Reducing and Preventing Pollution

April 8, 2008

TENASKA INC
DAVID D JOHNSON
1044 N 115 ST #400
OMAHA NE 68154 -4446

This letter is to inform you that on 4/8/2008, Use Determination Application, 07-11914 (self assigned tracking number GATEWAY-2008-1), was declared to be administratively complete. This application was filed for the following facility:

TENASKA GATEWAY GENERATION STATION
SH 315, PO BOX 697
MOUNT ENTERPRISE TX 75681 0697

The next step in the Use Determination Application process is the technical review of the application. If this is a Tier I, II, or III application the technical review will be completed within sixty days of the administrative complete date. If this is a Tier IV application the technical review will be completed within 30 days of the administrative complete date. If additional technical information is required a notice of deficiency letter (NOD) will be issued. The time period between the issuance of the NOD and the receipt of the response is not counted in determinating the length of the technical review .The TCEQ will notify you after the technical review has been completed. In accordance with the statute, the TCEQ has mailed a notice of receipt of this Use Determination Application to the RUSK County Appraisal District. Please contact the Tax Relief for Pollution Control Property Program at (512) 239-3100 if you have any questions.

Sincerely,

Ron Hatlett
Tax Relief for Pollution Control Property Program

Buddy Garcia, *Chairman*
Larry R. Soward, *Commissioner*
Bryan W. Shaw, Ph.D., *Commissioner*
Glenn Shankle, *Executive Director*

TEXAS COMMISSION ON ENVIRONMENTAL QUALITY

Protecting Texas by Reducing and Preventing Pollution

May 1, 2008

CHIEF APPRAISER
RUSK COUNTY APPRAISAL DISTRICT
PO BOX 7
HENDERSON, TX 75653

This letter is to inform you that on 5/1/2008, a final determination was issued with regard to Use Determination application 07-11914, filed by:

TENASKA GATEWAY PARTNERS LTD
TENASKA GATEWAY GENERATION STATION
SH 315, PO BOX 697
MOUNT ENTERPRISE, TX 75681

A copy of the use determination is included with this letter. House Bill 3121, enacted during the 77th Legislature Session, established a process for appealing a use determination. The Texas Commission on Environmental Quality (TCEQ) rules that implement the appeals process are at 30 TAC 17.25. Pursuant to 17.25(a)(1), an appeal must be filed within 20 days of receipt of the use determination. Should you choose to appeal the use determination, please submit a copy of your appeal to the TCEQ Tax Relief for Pollution Control Property program at the time of filing the appeal with the Chief Clerk of the commission.

In order to qualify for a tax exemption, the applicant must file an exemption request with your appraisal district. This exemption request must be accompanied by a copy of the positive use determination issued by the TCEQ. If you have any questions regarding this Use Determination or the appeals process, please call me at 512/239-3100.

Sincerely,

David Greer
Team Leader, Pollution Prevention

Buddy Garcia, *Chairman*
Larry R. Soward, *Commissioner*
Bryan W. Shaw, Ph.D., *Commissioner*
Glenn Shankle, *Executive Director*

TEXAS COMMISSION ON ENVIRONMENTAL QUALITY

Protecting Texas by Reducing and Preventing Pollution

May 1, 2008

TENASKA INC
DAVID D JOHNSON
1044 N 115 ST #400
OMAHA, NE 68154 4446

This letter is to inform you that on 5/1/2008, the technical review of Use Determination Application 07-11914 was completed. This application is for:

TENASKA GATEWAY PARTNERS LTD
TENASKA GATEWAY GENERATION STATION
SH 315, PO BOX 697
MOUNT ENTERPRISE, TX 75681 0697

The use determination is included with this letter. In order to request an exemption, a copy of this Use Determination, along with a completed exemption request form #50-248 (can be found at www.cpa.state.tx.us), must be provided to the Chief Appraiser of the appropriate appraisal district. This request must be made by April 30.

House Bill 3121, enacted during the 77th Legislative Session, established a process for appealing a use determination. The Texas Commission on Environmental Quality (TCEQ) rules that implement the appeals process are at 30 TAC 17.25. Pursuant to 17.25(a)(1), an appeal must be filed within 20 days of receipt of the use determination. Should you choose to appeal the use determination, please submit a copy of your appeal to the TCEQ Tax Relief for Pollution Control Property program at the time of filing the appeal with the Chief Clerk of the commission.

If you have any questions or require any additional information, please contact the Tax Relief for Pollution Control Property Program at (512) 239-3100.

Sincerely,

David Greer
Team Leader, Pollution Prevention

Buddy Garcia, *Chairman*
Larry R. Soward, *Commissioner*
Bryan W. Shaw, Ph.D., *Commissioner*
Glenn Shankle, *Executive Director*

TEXAS COMMISSION ON ENVIRONMENTAL QUALITY

Protecting Texas by Reducing and Preventing Pollution

USE DETERMINATION

The Texas Commission on Environmental Quality has reviewed Use Determination Application, 07-11914, filed by:

TENSKA GATEWAY PARTNERS LTD
TENASKA GATEWAY GENERATION STATION
SH 315, PO BOX 697
MOUNT ENTERPRISE TX 75681

The pollution control property/project listed in the Use Determination Application is:

This facility has three combustion turbine generators coupled with three thermally efficient heat recovery steam generators (HRSGs) and one enhanced steam turbine. This application is a Tier IV application seeking a partial use determination for the HRSGs and the enhanced steam turbines.

The outcome of the review is:

A 100% positive use determination for the three Heat Recovery Steam Generators. This equipment is considered to be pollution control equipment and was installed to meet or exceed federal or state regulations.

A negative determination is issued for the steam turbine. The use of the steam turbine does not provide an environmental benefit at the site. The steam turbine is not considered to be pollution control equipment.

Executive Director

May 1, 2008
Date

TAX RELIEF FOR POLLUTION CONTROL PROPERTY: TECHNICAL REVIEW DOCUMENT

Reviewed By: RLH App. No.: 07 - 11914 Review Start Date: 4/8/2008

Company Name: TENSKA GATEWAY PARTNERS LTD
Facility Name: TENASKA GATEWAY GENERATION STATION
County: RUSK Outstanding Fees: N
Batch/Voucher Number:B99788

ADMINISTRATIVE REVIEW

Administrative Complete Date:4/8/2008

TIER LEVEL
What Tier is this application? The application was filed as a Tier IV application. Is this the appropriate level?

The property listed on this application, Heat Recovery Steam Generators and a steam turbine are items B8 and B10 on the Equipment and Categories List. This application was filed as a Tier IV, Tier IV is the appropriate level for this application.

RELEVANT RULE, REGULATION, OR STATUTORY PROVISION
The rule listed in the application is: 40 CFR 60.44Da
The appropriate rule is: 40 CFR 60.44Da

Explain why this is the appropriate rule?

40 CFR 60.Subpart DA: Standards of Performance for New Stationary Sources. Standards of performance for Electric Utility Steam Generating Units for Which Construction is Commenced after September 18, 1978. This is an appropriate rule.

BRIEF DESCRIPTION OF PROPERTY
The property is described as:

This facility has three combustion turbine generators coupled with three thermally efficient heat recovery steam generators (HRSGs). This application is a Tier IV application seeking a partial use determination for the three HRSGs and the enhanced steam turbines. To generate the equivalent amount of power using combustion turbine they would have needed to install a Selective Catalytic Reduction System.The application requests a partial determination.

Is an adequate description and purpose of the property provided? Does it list the anticipated environmental benefits? Are sketches and flow diagrams provided if needed?

An adequate description of the property was provided. and the purpose of the property was listed. The anticipated environmental benefit is listed. Sketches and flow diagrams were provided.

DECISION FLOWCHART(30 TAC 17.15(a))
Mark the appropriate boxes: Box 3 Box 5 Box 6(IV) Y Box 10(III) Box 12(I) Box 13(II)
PART B DECISION FLOWCHART (17.15(b))
Mark the appropriate boxes: Box 1Y Box 2 Y Box 3 Y

Describe how the property flowed through the Decision Flowchart:

The Heat Recovery Steam Generators (HRSGs) are listed on Part B of the Equipment &

Categories List as item B-8. As Part B equipment the HRSGs leave the Decision Flow Chart at Box 6 and pass through Box 1 of the Part B Decision Flow Chart with a yes answer. Since the use of HRSGs provide an environmental benefit of reduced NOx emissions at the site there is a yes answer for Box 2. Since there is a reduction in NOx emissions there is an environmental rule which is being met, so there is a yes answer to Box 3. The steam turbine passes through Box 1 on the Part B Decision Flow Chart with a yes answer. Since the use of the steam turbine does not provide an environmental benefit at the site a no answer is the result of Box 2. The steam turbine is not eligible for a positive determination.

TIER III or IV APPLICATIONS

Does your calculation agree with the applicants?

No. The application contains a proposed formula for calculating the pollution control value of the HRSGs and the steam turbine. The formula is outcome determinative, and its focus is not on the pollution control aspect of the property. The Executive Director disagrees with this formula.

PROPERTY CATEGORIES AND COSTS

Is the table completed correctly? Has the applicant certified that all listed property became taxable for the first time after January 1, 1994? Is all information necessary for conducting the technical review included.

The table was completed correctly. The applicant certified that all listed property became taxable for the first time after January 1, 1994. All the information necessary for conducting the technical review was included on the application.

TECHNICAL DEFICIENCIES

Is the application complete as received: Y If the application was not administratively complete explain below when justifying the final decision in the final determination section. If the application was not technically complete then:

Provide the language to be used in the Notice of Deficiency (NOD) letter:

Summarize the NOD response:

Provide the language used in the second NOD letter:

Summarize the second NOD response:

Provide the language used in the third NOD letter:

Summarize the third NOD response:

FINAL DETERMINATION

If the property description has been summarized enter the detailed property description:

This facility has three combustion turbine generators coupled with three thermally efficient heat recovery steam generators (HRSGs). This application is a Tier IV application seeking a partial use determination for the three HRSGs and the enhanced steam turbines. To generate the equivalent amount of power using combustion turbine they would have needed to install a Selective Catalytic Reduction System.The application requests a partial determination.

Provide the reason for your final determination:

The Heat Recovery Steam Generators meet all of the requirements of Chapter 17. A positive use determination based on the most appropriate formula should be issued for the Heat Recovery Steam Generators. The most appropriate formula has been determined by the Executive Director. A negative determination should be issued for the steam turbine. The use of the steam turbine does not result in there being an environmental benefit at the site.

Provide the language for the final determination.

A positive use determination of 100% for the three Heat Recovery Steam Generators. A negative determination is issued for the steam turbine. The use of the steam turbine does not provide an environmental benefit at the site. The steam turbine is not considered to be pollution control equipment.

Highlight the required signatures and establish the appropriate due dates.

Reviewed: Ronald Ketteler **Date Signed:** 5/1/2008

Peer Reviewed: Larry McArthur **Date Signed:** 5/1/2008

Team Leader: [illegible] **Date Signed:** 5/1/08

Section Manager: [illegible] **Date Signed:** MAY 1 2008

Division Director: [illegible] **Date Signed:** MAY 1 2008

Executive Director's Exhibit 2

Freestone: Application and Use Determination Documents

TEXAS
COMMISSION
ON ENVIRONMENTAL
QUALITY

2009 MAY 23 AM 8:43

CHIEF CLERKS OFFICE

TEXAS COMMISSION ON ENVIRONMENTAL QUALITY
APPLICATION FOR USE DETERMINATION
FOR POLLUTION CONTROL PROPERTY

The TCEQ has the responsibility to determine whether a property is a pollution control property. A person seeking a use determination for pollution control property must complete the attached application or use a copy or similar reproduction. For assistance in completing this form refer to the TCEQ guidelines document, *Property Tax Exemptions for Pollution Control Property*, as well as 30 TAC §17, rules governing this program. For additional assistance please contact the Tax Relief for Pollution Control Property Program at (512) 239-3100. The application should be completed and mailed, along with a complete copy and appropriate fee, to: TCEQ MC-214, Cashiers Office, P.O. Box 13088, Austin, Texas 78711-3088.

1. GENERAL INFORMATION

A. What is the type of ownership of this facility?

- ☐ Corporation
- ☐ Sole Proprietor
- ☐ Partnership
- ☐ Utility
- ☑ Limited Partnership
- ☐ Other

B. Size of company: Number of Employees

- ☑ 1 to 99
- ☐ 1,000 to 1,999
- ☐ 100 to 499
- ☐ 2,000 to 4,999
- ☐ 500 to 999
- ☐ 5,000 or more

C. Business Description: **Electric Power Generation**

2. TYPE OF APPLICATION

- ☐ **Tier I $150 Application Fee**
- ☐ **Tier III $2,500 Application Fee**
- ☐ **Tier II $1,000 Application Fee**
- ☑ **Tier IV $500 Application Fee**

NOTE: Enclose a check, money order to the TCEQ, or a copy of the ePay receipt along with the applicaton to cover the required fee.

3. NAME OF APPLICANT

A. Company Name: Freestone Power Generation L.P.

B. Mailing Address (Street or P.O. Box): 717 Texas, Ste. 1000

C. City, State, ZIP: Houston, TX 77002

4. PHYSICAL LOCATION OF PROPERTY REQUESTING A TAX EXEMPTION

A. Name of facility: Freestone Energy Center

B. Type of Mfg Process or Service: Electric Power Generation

C. Street Address: 13.6 mi north on FM 488 from Fairfield.

D. City, State, ZIP: Fairfield, Texas 75840

E. Tracking Number Assigned by Applicant: DPFreestone B

F. Customer Number or Regulated Entity Number: N/A

5. APPRAISAL DISTRICT WITH TAXING AUTHORITY OVER PROPERTY

A. Name of Appraisal District: Freestone

B. Appraisal District Account Number: M-0012170-9900015; M-0012170-9900010;

07-11966

6. CONTACT NAME (must be provided)

A. Company/Organization Name:	Duff and Phelps LLC	
B. Name of Individual to Contact:	Greg Maxim	
C. Mailing Address:	919 Congress Ave.	Suite 1450
D. City, State, ZIP:	Austin, TX 78701	
E. Telephone number and fax number:	(512) 671-5580	Fax (512) 671-5501
F. E-Mail address (if available):	gregory.maxim@duffandphelps.com	

7. RELEVANT RULE, REGULATION, OR STATUTORY PROVISION

Please reference Section 8. Each item is detailed with the proper statute, regulation, or environmental regulatory provision.

8. DESCRIPTION OF PROPERTY

Background

The Freestone Energy Center ("the Project") is a nominally 1050 MW merchant power plant that is situated on a 63-acre site that is a portion of approximately 550 acres owned by Calpine in north central Texas, approximately 80 miles south of Dallas.

The primary equipment for the facility consists of four combustion turbine generators (CTGs), four heat recovery steam generators (HRSGs), and two steam turbine generators (STGs) (a "4~4x2" configuration). The equipment is configured into two largely independent power blocks, each consisting of 2 CTGs, 2 HRSGs, and 1 STG (thus, two 2x2~1 configurations).

The CTGs are General Electric model 7FAs. The CTGs are designed to compress air, mix and ignite the air with pipeline quality natural gas, expand the hot gas through a power turbine, and exhaust into the HRSGs. The combustion turbines utilize a proven Dry Low NOx (DLN) combustion system which will meet the permit requirement of 9 ppmvd @ 15% 02. The CTGs are also equipped with inlet fogging, which improves emissions of the turbine by cooling the inlet air.

The combustion turbines have been equipped with several devices and enhancements that further refine the airflow through the combustion path. By reducing the airflow through the combustors as load is reduced, the air to fuel ratio is maintained for proper combustion. These devices and enhancements do not affect the overall full load output of the combustion turbines. The General Electric 7FAs installed at Freestone incorporate the following:

1. The combustion system is a Dry low NOx (DLN-2.6) system designed to lower the NOx emissions to a level less than 9ppm or lower and also reduce CO to levels less than 15ppm or lower, as the primary emissions control mechanism. This is the latest development in GE low emissions combustion technology. It is a can-annular design (14 individual combustor baskets and transition pieces), which has six

premixed fuel nozzles per combustor, five on the periphery and one in the center.

2. An integral part of the DLN system is the IGV's (Inlet Guide Vanes), which are covered in the complete DLN cost. The IGV's are used in lower load operations to restrict the airflow through the turbine, thereby keeping the emissions in compliance with the DLN software algorithms. At base load, the guide vanes are essentially open. As load is reduced, the guide vanes close off limiting the amount of air flowing into the combustion system. The vanes are located at the inlet side of the combustion turbine compressor and are controlled by an electronic turbine governor based on turbine load.

The system consists of high efficiency combustion liners with thermal barrier coatings, re-designed transition pieces to better capture the combustion gases for more reliable operation and most importantly the 2.6 versions of fuel nozzles for cleaner burning of the fuel gas.

Each CTG exhausts into its own HRSG, which utilizes the exhaust heat to generate steam for use in the STG. Each HRSG is an unfired, three pressure, reheat unit. The steam from the HRSGs drives the STGs. Each of the two General Electric STGs is a reheat, two case, double flow low pressure, down exhaust design. Each STG exhausts into a water-cooled condenser which converts the exhaust steam to water to be pumped back to the HRSGs. The four HRSG's each have an exhaust stack that is approximately 155 feet in height. These stacks are designed to elevate release points of pollutants to improve the dispersion characteristic. This allows the exhaust stream to better mix with the ambient air resulting in lower concentrations of a variety of pollutants.

The cooling water for the STG condenser and other plant coolers will be supplied by the two cooling towers located on the site. Each power block will have one tower associated with it. The cooling towers cool the cooling water by evaporating a portion of the water as it passes over the fill in the tower. Mechanical draft fans draw air over the fill to enhance the cooling effect. The majority of water is recycled in this manner, with only a small wastewater flow required to keep solids buildup below acceptable levels. The raw water will be taken from an intake structure that is built on the Richland Chambers Reservoir and delivered to the Project site by way of a pipeline. This supply water is used directly as makeup water to the cooling towers to replace water lost to evaporation or which must be bled off as waste. The remaining water supply to be used in the HRSGs will be treated using sand filters, packed bed demineralizers, and finally mixed bed demineralizers for polishing. Wastewater from the plant is recycled as much as possible in the cooling tower, with final wastewater being discharged to the nearby Trinity River by way of a wastewater discharge line. The Utility Wastewater discharge stream will be continuously monitored to record flow, temperature, conductivity, and ph and dissolved oxygen for the purpose of reporting and complying with discharge limitations.

The storm water collection sewer system collects rainwater runoff from various portions of the Project and delivers runoff via a drainage system to a collection basin.

Overview of Combined Cycle Technology

The Facility is a combined-cycle gas turbine power plant consisting of gas Combustion Turbines ("CTs") equipped with heat recovery steam generators to capture heat from the gas turbine exhaust. Steam produced in the heat recovery steam generators powers a steam turbine generator(s) to produce additional electric power. The use of otherwise wasted heat in the turbine exhaust gas results in higher plant thermal efficiency compared to other power generation technologies. Combined-cycle plants currently entering service can convert over 50% of the chemical energy of natural gas into electricity (HHV basis). Employment of the Brayton Thermodynamic Cycle (Gas Turbine Cycle) in combination with the Rankine Thermodynamic Cycle results in the improved efficiency.

The Rankine cycle is a thermodynamic cycle that converts heat from an external source into work. In a Rankine cycle, external heat from an outside source is provided to a fluid in a closed-loop system. This fluid, once pressurized, converts the heat into work output using a turbine. The fluid most often used in a Rankine cycle is water (steam) due to its favorable properties, such as nontoxic and unreactive chemistry, abundance, and low cost, as well as its thermodynamic properties. The thermal efficiency of a Rankine cycle is usually limited by the working fluid. Without pressure reaching super critical the temperature range the Rankine cycle can operate over is quite small, turbine entry temperatures are typically 565°C (the creep limit of stainless steel) and condenser temperatures are around 30°C. Traditional coal fired and natural gas fired Rankine cycle power generation plants are limited by the inlet pressures and temperatures of the steam turbine design and the condenser vacuum and temperature. The Rankine cycle can achieve thermodynamic cycle efficiency (useful work obtained as a percentage of fuel input) ranging from 33% to 36%. However, if the Rankine cycle is used in conjunction with or as the "bottoming" cycle to the Brayton cycle the efficiencies can be improved as discussed below. This low turbine entry temperature (compared with a gas turbine) is why the Rankine cycle is often used as a bottoming cycle in combined cycle gas turbine power stations.

The Brayton cycle is a constant pressure thermodynamic cycle that converts heat from combustion into work. A Brayton engine, as it applies to a gas turbine system, will consist of a fuel or gas compressor, combustion chamber, and an expansion turbine. Air is drawn into the compressor, mixed with the fuel, and ignited. The resulting work output is captured through a pump, cylinder, or turbine. A Brayton engine forms half of a combined cycle system, which combines with a Rankine engine to further increase overall efficiency. Cogeneration systems typically make use of the waste heat from Brayton engines, typically for hot water production or space heating.

By combining both gas and steam cycles, high input temperatures and low output

temperatures can be achieved. The efficiency of the cycles are additive, because they are powered by the same fuel source. A combined-cycle plant has a thermodynamic cycle that operates between the gas turbine's high firing temperature and the waste heat temperature from the condensers of the steam cycle. This large range means that the Carnot efficiency of the cycle is high. The actual efficiency, while lower than this is still higher than that of either plant on its own. The thermal efficiency of a combined-cycle power plant is the net power output of the plant divided by the heating value of the fuel. Combined cycle power generation plants that produce only electricity can achieve thermodynamic efficiencies in the range of 53% to 59%, with the normal range being 53% to 56%. Combined cycle power generation plants that produce steam or hot water in conjunction with electric power can improve upon those values by "offsetting" fired boiler operations within adjacent industrial complexes. These facilities are known as combined cycle cogeneration units.

A single-train combined-cycle plant consists of one gas turbine generator, a heat recovery steam generator (HSRG) and a steam turbine generator ("1 x 1" configuration). As an example, an "FA-class" combustion turbine, the most common technology in use for large combined-cycle plants within the state of Texas and other locations throughout the United States, represents a plant with approximately 270 megawatts of capacity. ISO references ambient conditions at 14.7 psia, 59 F, and 60% relative humidity.

See Figure 1 – Standard Combined-Cycle Configuration, below.

It is common to find combined-cycle plants using two or even three gas turbine generators and heat recovery steam generators feeding a single, proportionally larger steam turbine generator. Larger plant sizes result in economies of scale for construction and operation, and designs using multiple combustion turbines provide improved part-load efficiency. A 2 x 1 configuration using FA-class technology will produce about 540 megawatts of capacity at International Organization for Standardization ("ISO") conditions. ISO references ambient conditions at 14.7 psia, 59 F, and 60% relative humidity.

Because of high thermal efficiency, high reliability, and lower air emissions, combined-cycle gas turbines have been the new resource of choice for bulk power generation for well over a decade. Other attractive features include significant operational flexibility, the availability of relatively inexpensive power augmentation for peak period operation and relatively low carbon dioxide production.

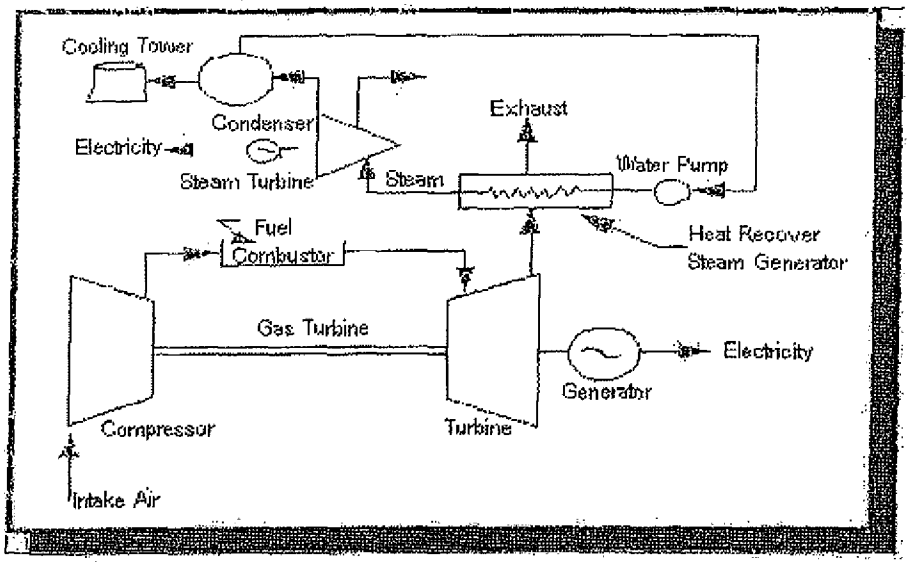

FIGURE 1 - Standard Combined-Cycle Configuration (1)

As an example, consider a gas turbine cycle that has an efficiency of 40%, which is a representative value for current Brayton Cycle gas turbines, and the Rankine Cycle has an efficiency of 30%. The combined-cycle efficiency would be 58%, which is a very large increase over either of the two simple cycles. Some representative efficiencies and power outputs for different cycles are shown in Figure 2 – Comparison of Efficiency and Power Output of Various Power Products, below.

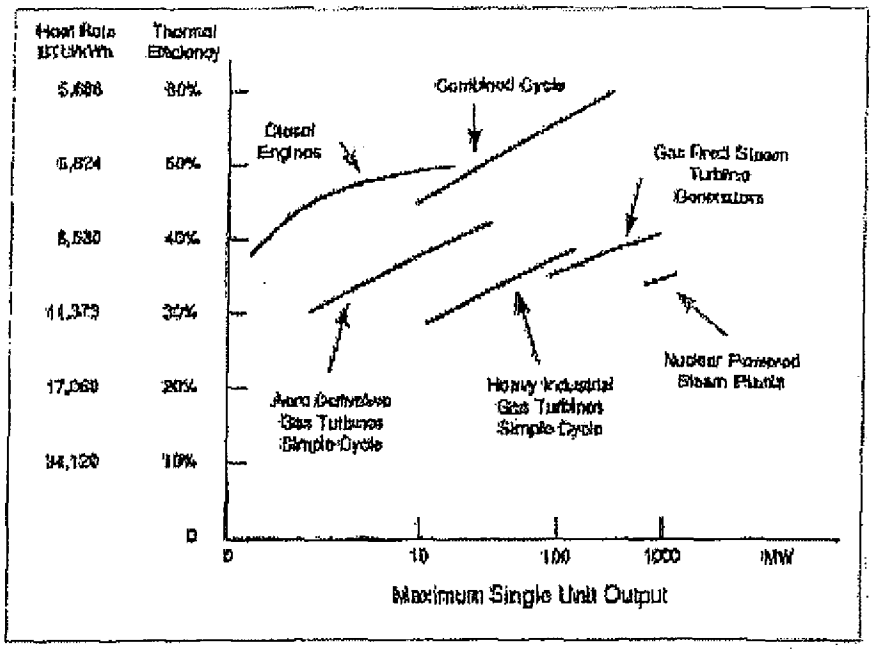

FIGURE 2 - Comparison of efficiency and power output of various power products [Bartol (1997)] (2)

Current Regulatory Authority for Output-Based Emissions

Innovative power technologies such as combined-cycle technology offer enormous potential to improve efficiency and enhance the environmental footprint of power generation through the reduction and/or prevention of air emissions to the environment. Currently, two thirds of the fuel burned to generate electricity in traditional fossil-fired steam boilers is lost. Traditional U.S. power generation facility efficiencies have not increased since the 1950s and more than one fifth of the U.S. power plants are more than 50 years old.(6) In addition, these facilities are the leading contributors to U.S. emissions of carbon dioxide, NOx, sulfur dioxide ("SO2"), and other contaminants into the air and water.

The ability to recognize and regulate the efficiency benefits of pollution reduction and/or prevention through the use of combined-cycle technology is achieved through the use of Output-Based emissions standards, incorporated since September 1998 within the U.S. EPA's new source performance standards ("NSPS") for NOx, from both new utility boilers and new industrial boilers. Pursuant to section 407(c) of the Clean Air Act in subpart Da (Electric Utility Steam Generating Units) and subpart Db (Industrial-Commercial-Institutional Steam Generating Units) of 40 CFR part 60, the U.S. EPA revised the NOx emissions limits for steam generating units for which construction, modification, or reconstruction commenced after July 9, 1997 (3). Output-Based regulations are also exemplified by those used in the U.S. EPA's NOx Cap and Trade Program for the NOx State Implementation Plan

("SIP") Call of 1998, which uses units of measure such as lb/MWh generated or lb concentration ("ppm"), which relate to the emissions to the productive output – electrical generation of the process.(4)

The use of innovative technologies such as combined-cycle units reduces fossil fuel use and leads to multi-media reductions in the environmental impacts of the production, processing transportation, and combustion of fossil fuels. In addition, reducing fossil fuel combustion is a pollution prevention measure that reduces emissions of all products of combustion, not just the target pollutant (currently NOx) of a federal regulatory program.

Authority to Expand Pollution Control Equipment & Categories in Texas

Under Texas House Bill 3732 ("HB3732") enacted in 2007, Section 11.31 of the Texas Tax Code is amended to add certain plant equipment and systems to the current list of air, water, or land pollution control devices exempt from property taxation in Texas.

Specifically, the language reads as follows:

SECTION 4. Section 11.31, Tax Code, is amended by adding Subsections (k), (l), and (m) to read as follows:
(k) The Texas Commission on Environmental Quality shall adopt rules establishing a nonexclusive list of facilities, devices, or methods for the control of air, water, or land pollution, which must include:
(1) coal cleaning or refining facilities;
(2) atmospheric or pressurized and bubbling or circulating fluidized bed combustion systems and gasification fluidized bed combustion combined-cycle systems;
(3) ultra-supercritical pulverized coal boilers;
(4) flue gas recirculation components;
(5) syngas purification systems and gas-cleanup units;
(6) enhanced heat recovery systems;
(7) exhaust heat recovery boilers;
(8) heat recovery steam generators;
(9) superheaters and evaporators;
(10) enhanced steam turbine systems;
(11) methanation;
(12) coal combustion or gasification byproduct and coproduct handling, storage, or treatment facilities;
(13) biomass cofiring storage, distribution, and firing systems;
(14) coal cleaning or drying processes, such as coal drying/moisture reduction, air jigging, precombustion decarbonization, and coal flow balancing technology;
(15) oxy-fuel combustion technology, amine or chilled ammonia scrubbing, fuel or emission conversion through the use of catalysts, enhanced scrubbing technology, modified combustion technology such as chemical looping, and cryogenic technology;
(16) if the United States Environmental Protection Agency adopts a final rule or regulation regulating carbon dioxide as a pollutant, property that is used, constructed, acquired, or installed wholly or partly to capture carbon dioxide from an anthropogenic source in this state that is geologically sequestered in this state;
(17) fuel cells generating electricity using hydrogen derived from coal, biomass, petroleum coke, or solid waste; and
(18) any other equipment designed to prevent, capture, abate, or monitor nitrogen oxides, volatile organic compounds, particulate matter, mercury, carbon monoxide, or any criteria pollutant.
(l) The Texas Commission on Environmental Quality by rule shall update the list adopted under Subsection (k) at least once every three years. An item may be removed from the list if the commission finds compelling evidence to support the conclusion that the item does not provide pollution control benefits.
(m) Notwithstanding the other provisions of this section, if the facility, device, or method for the

control of air, water, or land pollution described in an application for an exemption under this section is a facility, device, or method included on the list adopted under Subsection (k), the executive director of the Texas Commission on Environmental Quality, not later than the 30th day after the date of receipt of the information required by Subsections (c)(2) and (3) and without regard to whether the information required by Subsection (c)(1) has been submitted, shall determine that the facility, device, or method described in the application is used wholly or partly as a facility, device, or method for the control of air, water, or land pollution and shall take the actions that are required by Subsection (d) in the event such a determination is made.

Under the TCEQ's recently updated "Tax Relief for Pollution Control Property – Application Instructions and Equipment and Categories List – Effective January 2008", the Equipment and Categories List - Part B ("ECL Part B") is a list of the pollution control property categories adopted and set forth in TTC Sec. 26.045(f). The taxpayer is to supply a pollution control percentage for the equipment listed in Part B via calculations demonstrating pollution control, prevention and/or reductions achieved by the listed equipment or systems.

The following property descriptions outline the environmental purpose, including the anticipated environmental benefit of pollution control additions considered under the Application Instructions' ECL Part B that have been constructed and placed into use at the Facility as of its placed-in-service date, or installed subsequent to in-service since 1994:

Property Descriptions

Item #1 Combined-Cycle Gas Turbine Plant Heat Recovery Steam Generator ("HRSG") and Support Systems Tier IV B-8

40 CFR Part 60 Subparts DA and DB, NOx Limits for Electric Utility Steam Generating Units and Industrial-Commercial-Institutional Steam Generating Units for New Source Performance Standards ("NSPS").

TAC Rule 106.512, Standard Permit for Electric Generating Units (EGU)

NOTE: Permits issued under Texas Clean Air Act's Health & Safety Code Sections 382.011, applies to all electric generating units that emit air contaminants, regardless of size, and it is to reflect Best Available Control Technology ("BACT") for electric generating units on an output basis in pounds of NOx per megawatt hour, adjusted to reflect a simple cycle power plant.

The heat recovery steam generator ("HRSG") found in the Facility is a heat exchanger that recovers heat from a hot gas stream. It produces steam that can be used in a process or used to drive a steam turbine. A common application for an HRSG is in a combined-cycle power station, where hot exhaust from a gas turbine is fed to an HRSG to generate steam which in turn drives a steam turbine. This combination produces electricity in a more thermally efficient manner than either the gas turbine or steam turbine alone.

The Facility's HRSGs consist of three major components: the Evaporator, Superheater, and Economizer. The different components are put together to meet the operating requirements of the unit. Modular HRSGs normally consist of three sections: an LP (low pressure) section, a reheat/IP (intermediate pressure) section, and an HP (high pressure) section. The reheat and IP sections are separate circuits inside the HRSG. The IP steam partly feeds the reheat section. Each section has a steam drum and an evaporator section where water is converted to steam. This steam then passes through superheaters to raise the temperature and pressure past the saturation point.

Item #2 Steam Turbine and Support Systems Tier IV B-10

40 CFR Part 60 Subparts DA and DB, NOx Limits for Electric Utility Steam Generating Units and Industrial-Commercial-Institutional Steam Generating Units for New Source Performance Standards ("NSPS").

TAC Rule 106.512, Standard Permit for Electric Generating Units (EGU)

NOTE: Permits issued under Texas Clean Air Act's Health & Safety Code Sections 382.011, applies to all electric generating units that emit air contaminants, regardless of size, and it is to reflect Best Available Control Technology ("BACT") for electric generating units on an output basis in pounds of NOx per megawatt hour, adjusted to reflect a simple cycle power plant.

The steam turbine(s) found in the Facility operate on the Rankine cycle in combination with the Brayton cycle, as described above. Steam created in the Facility HRSG(s) from waste heat that would have otherwise been lost to the atmosphere enters the steam turbine via a throttle valve, where it powers the turbine

and connected generator to make electricity. Use of HRSG/Steam Turbine System combination provides the Facility with an overall efficiency of greater than 50%. Steam turbine systems similar to the Facility's have a history of achieving up to 95% availability on an annual basis and can operate for more than a year between shutdown for maintenance and inspections. (5)

Pollution Control Percentage Calculation: Avoided Emissions Approach

To calculate the percentage of the equipment or category deemed to be pollution control equipment, the Avoided Emissions approach has been used. This approach relies on thermal output differences between a conventional power generation system and the combined-cycle system at the Facility. Specifically, the percentage is determined by calculating the displacement of emissions associated with the Facility's thermal output and subtracting these emissions from a baseline emission rate. These displaced emissions are emissions that would have been generated by the same thermal output from a conventional system.

Greater energy efficiency reduces all air contaminant emissions, including the greenhouse gas, carbon dioxide. Higher efficiency processes include combined-cycle operation and combined heat and power ("CHP") generation. For electric generation the energy efficiency of the process expressed in terms of millions of British thermal units ("MMBTU's") per Megawatt-hour. Lower fuel consumption associated with increased fuel conversion efficiency reduces emissions across the board – that is NOx, SOx, particulate matter, hazardous air pollutants, and greenhouse gas emissions such as CO2.

In calculating the percent exempt for the listed items from the ECL-Part B, we utilized Output-Based NOx allocation method for both power generation projects that replaced existing facilities and "Greenfield" power and heat generation facilities. We looked at the various fossil fuel technologies in use today and chose the baseline facility to be a natural gas fuel-fired steam generator. We benchmarked this conventional generation to the subject natural gas-fired combined cycle generator at the Facility. By doing so, we narrowed the heat rate factors as much as possible to be conservative and uniform in modeling. The benchmark heat rate factor is the following:

Natural Gas fuel-fired Steam Generator: 10,490 BTU's/kWh

This baseline heat rate purposely omits other fossil fuel sources in order to eliminate impurity type characteristics, which in turn eliminated the NOx emission and cost of control differences of each fossil fuel and generator type. Comparing the emissions impact of different energy generation facilities is concise when emissions are measured per unit of useful energy output. For the purpose of our calculations, we converted all the energy output to units of MWh (1 MWh = 3.413 MMBTU), and compared the total emission rate to the baseline facility.

The comparison steps to calculate the NOx reduction is as follows:

Calculation (Reference Schedule A)

Step 1 – Subject Output-Based Limit Calculation (lbs NOx / MWh)

(Input-based Limit (lbs NOx/MMBTU)) X (Heat Rate (Btu/kWh)) / (1,000,000 Btu / 1,000 kWh) = Output: (lbs NOx/MWh),

Step 2 – Subject Output Conversion Calculation (NOx Tons / Year)

(Output (lbs NOx/MWh) X (Unit Design Capacity (MW)) X (Capacity Factor) X ((365 Days) X (24 hrs/day)) / 2,000 lbs = Output; (NOx Tons/Year)

Step 3 – Baseline Output-Based Limit Calculation (lbs NOx / MWh)

(Input-based Limit (lbs NOx/MWh)) X (Heat Rate (Btu/kWh)) / (1,000,000 Btu / 1,000 kWh) = Output: (lbs NOx/MWh)

Step 4 – Baseline Output Conversion Calculation (NOx Tons / Year)

(Output (lbs NOx/MMBtu) X (Unit Design Capacity (MW)) X (Capacity Factor) X ((365 Days) X (24 hrs/day)) / 2,000 lbs = Output: (NOx Tons/Year)

Step 5 – Percent NOx Reduction Calculation

$((\text{Output Baseline})_{\text{step 4}} - (\text{Output Subject}))_{\text{step 2}} / (\text{Output Subject})_{\text{step 2}}$ = % Reduction Output Subject

Step 6 – Percent Exempt Calculation

(Total Subject Facility Cost) X (% NOx Reduction) = Capital Cost of NOx Avoidance

Step 7 – Percent Exempt Calculation

Total Cost of NOx Avoidance / Total Cost of HB 3732 Equipment = % Exempt

- If % Exempt is greater than 100% HB 3732 Equipment is 100% Exempt
- If % Exempt is less than 100% then HB 3732 Equipment is partially exempt at the Step 6 calculation.

NOTE: See the attached calculation sheet for the details regarding Facility-specific calculations and property tax exemption percentage results based upon these calculations.

REFERENCES

1. "Output-Based Regulations: A Handbook for Air Regulators", U.S. Environmental Protection Agency, Office of Atmospheric Programs – Climate Protection Partnerships Division, August, 2004, p.4.

2. "Output-Based Emissions Standards; Advancing Innovative Energy Technologies", Northeast-Midwest Institute; 2003, p. 9.

3. IBID, p.13.

4."Output-Based Regulations: A Handbook for Air Regulators", U.S. Environmental Protection Agency, Office of Atmospheric Programs – Climate Protection Partnerships Division, August, 2004, p.4.

5. http://www.cogeneration.net/Combined_Cycle_Power_Plants.htm

6. "Output-Based Emissions Standards; Advancing Innovative Energy Technologies", Northeast-Midwest Institute; 2003, p. 9.

9. PARTIAL PERCENTAGE CALCULATION

N/A.

10. PROPERTY CATEGORIES AND COSTS

See attached Schedule 10.

11. EMISSION REDUCTION INCENTIVE GRANT

Will an application for an Emission Reduction Incentive Grant be on file for this property/project:

[ ] Yes [X] No

12. APPLICATION DEFICIENCIES

After an initial review of the application, the TCEQ may determine that the information provided with the application is not sufficient to make a use determination. The TCEQ may send a notice of deficiency, requesting additional information that must be provided within 30 days of written notice.

13. FORMAL REQUEST FOR SIGNATURE

By signing this application, you certify that this information is true to the best of your knowledge and belief.

NAME: [illegible] DATE: 25 March 2008

TITLE: Director

COMPANY: Duff & Phelps LLC

Under Texas Penal Code, Section 37.10, if you make a false statement on this application, you could receive a jail term of up to one year and a fine up to $2,000, or a prison term of two to 10 years and a fine of up to $5,000.

14. DELINQUENT FEE/PENALTY PROTOCOL

This form will not be processed until all delinquent fees and/or penalties owed to the TCEQ or the Office of the Attorney General on behalf of the TCEQ are paid in accordance with the Delinquent Fee and Penalty Protocol. (Effective 9/1/2006)

Calpine
Freestone
TCEQ Use Determination Application - 2008
Schedule 10
Tier IV

10. PROPERTY CATEGORIES AND COST

PROPERTY	PROJECT ID. NO.	IN SERVICE DATE	TAXABLE ON OR BEFORE 1/1/94? (Y / N)	TIER IV DECISION FLOW CHART BOX	ECL NUMBER	ESTIMATED PURCHASE COST	% EXEMPT	EXEMPT COST
Heat Recovery Steam Generators (HRSG)	1	2002	N	3	B-8	$ 53,270,644	100%	$ 53,270,644
Steam Turbine Systems	2	2002	N	3	B-10	$ 8,996,415	100%	$ 8,996,415
					Tier IV Total	$ 62,267,059		$ 62,267,059

[redacted]

Subject (A): 1038 Thermal Energy Calculation

Subject Details:

Average Heat Rate [1a]		7,050 Btu/kWh
NOx Emissions [2a]		405 Tons/year
Plant Capacity [3a]		1,038 MW
Capacity Factor [4a]		47.05%
Technology [5a]		Combined Cycle
Total Subject Facility Cost [6a]	$	492,800,000
Total Cost of Tier IV Equipment [7a]	$	62,262,059

Baseline Details:

Average Heat Rate [1b]	10,490 Btu/kWh
Technology [5b]	Steam Turbine

STEP 1
Subject Output-based Limit Calculation (lbs NOx/MWh)

Input-based Limit (lbs NOx/MMBtu)	x	Heat Rate (Btu/kWh)	/	Unit Conversions (1,000,000 Btu / 1000 kWh)	=	Output-based Limit (lbs NOx/MWh)
0.0292		7,050		1,000		0.2061

STEP 2
Subject Output Conversion Calculation (NOx Tons/Year)

Output-based Limit (lbs NOx/MWh)	x	Capacity (MW)	x	Capacity Factor	x	Unit Conversions (365 days * 24 Hours / 2,000 lbs)	=	Output NOx (Tons/Year)
0.2061		1038		47.05%		4		402.7

STEP 3
Baseline Output-based Limit Calculation (lbs NOx/MWh)

Input-based Limit (lbs NOx/MMBtu)	x	Heat Rate (Btu/kWh)	/	Unit Conversions (1,000,000 Btu / 1000 kWh)	=	Output-based Limit (lbs NOx/MWh)
0.0292		10,490		1,000		0.3063

STEP 4
Baseline Output Conversion Calculation (NOx Tons/Year)

Output-based Limit (lbs NOx/MWh)	x	Capacity (MW)	x	Capacity Factor	x	Unit Conversions (365 days * 24 Hours / 2,000 lbs)	=	Output NOx (Tons/Year)
0.3063		1038		47.05%		4		598.4

STEP 5
Tons Avoided Calculation

Output Baseline 598.4	-	Output Subject 402.7	=	Output Reduced 195.7	=	% NOx Reduction 48.9%

STEP 6
Overall Tier IV Calculation

Total Subject Cost Cost $492,800,000	÷	% NOx Reduction 48.9%	=	Overall Cost of NOx Avoidance $239,112,000

STEP 7
Tier IV Exempt Calculation

Total Cost of NOx Avoidance $239,112,000	÷	Total Cost of Tier IV Equipment $62,262,059	=	% Exempt 384.0%

Conclude	100%

(1a) - Heat rate represent: plant actual heat rate (HHV) and was provided by the client
(2a) - NOx emissions is the actual NOx pollution produced in ppm and was provide by the client
(3a) - Plant capacity is the average nominal capacity and was provided by the client
(4a) - Capacity factor represents the average annual capacity factor and was provided by the client. "Average" was determined by a weighted average based on the net actual generation of EU
(5a) - Technology represents the actual technology of the subject
(6a) - Total subject facility cost represents the total cost to build the entire facility and was determined based on data provided by the client
(7a) - Total Tier IV equipment was determined by adding the eligible - BACT, LCT, part B equipment and the associated cost from actual data provide by the client
(1b) - Baseline heat rate was published by the Energy Information Administration ("EIA")
(5b) - Baseline technology represents the technology that the subject would have replaced at the time of the subject construction

DUFF & PHELPS

Greg Maxim
Director
Phone:(512) 671-5580
gregory.maxim@duffandphelps.com

March 25, 2008

TCEQ - Cashiers Office MC-214
Building A
12100 Park 35 Circle
Austin, Texas 78753

Subject: Application for Use Determination for Pollution Control Property
Freestone Energy Center - 13.6 mi north on FM 488 from Fairfield. Fairfield, Texas

Enclosed please find one application (the "Application") for property tax exemptions for certain qualifying pollution control property at the Freestone Energy Center Project (the "Facility") in Freestone County, Texas.

Pursuant to Title 30 of Chapter 17 of the Texas Administrative Code, the Application has been prepared using the Texas Commission on Environmental Quality ("TCEQ") Application for Use Determination for Pollution Control Property. The enclosed application is a Tier IV Application.

Submission of this Application is required as a process step in the TCEQ's pollution control certification process for tax exemption of certain assets used in pollution control capacities within the Facility. As outlined by the application instructions, the fee for this Tier IV Application is $500. Enclosed please find a check for $500 for the Application processing.

The Application can be summarized as follows:

Property	Description	Estimated Cost
Tier IV	See Attached Schedule	$62,267,059

Please send one copy of the completed property tax exemption Use Determination to the following address:

Duff and Phelps LLC
c/o Greg Maxim
919 Congress Ave.
Suite 1450
Austin, TX 78701

If you have any questions regarding the Application or the information supplied with these Application, please contact Greg Maxim of Duff & Phelps, LLC at (512) 671-5580 or e-mail at gregory.maxim@duffandphelps.com.

Very truly yours,

DUFF & PHELPS LLC

Signature:

Name: Greg Maxim

Title: Director

Enclosures

Buddy Garcia, *Chairman*
Larry R. Soward, *Commissioner*
Bryan W. Shaw, Ph.D., *Commissioner*
Glenn Shankle, *Executive Director*

TEXAS COMMISSION ON ENVIRONMENTAL QUALITY

Protecting Texas by Reducing and Preventing Pollution

March 28, 2008

CHIEF APPRAISER
FREESTONE COUNTY APPRAISAL DISTRICT
218 N MOUNT
FAIRFIELD TX 75840

This letter is to inform you that a Use Determination Application has been filed by:

FREESTONE POWER GENERATION LP

for:

FREESTONE POWER GENERATION LP
1366 FM 488
FAIRFIELD TX 75840-

Appraisal District Account Number: **M-0012170-9900015**

This facility is located in **FREESTONE** County.

A complete copy of the application is included with this letter. We recommend that a copy of this application be shared with the person who conducts the appraisal of this property.

This application has been assigned a tracking number of 07 -11966. Please contact the Tax Relief for Pollution Control Property Program at (512) 239-3100 if you have any questions.

Sincerely,

Ron Hatlett
Tax Relief for Pollution Control Property Program

Buddy Garcia, *Chairman*
Larry R. Soward, *Commissioner*
Bryan W. Shaw, Ph.D., *Commissioner*
Glenn Shankle, *Executive Director*

TEXAS COMMISSION ON ENVIRONMENTAL QUALITY

Protecting Texas by Reducing and Preventing Pollution

April 8, 2008

DUFF & PHELPS LLC
GREG MAXIM
919 CONGRESS #1450
AUSTIN TX 78701

This letter is to inform you that on 4/8/2008, Use Determination Application, 07-11966 (self assigned tracking number **DPFREESTONE B**), was declared to be administratively complete. This application was filed for the following facility:

FREESTONE POWER GENERATION LP
1366 FM 488
FAIRFIELD TX 75840

The next step in the Use Determination Application process is the technical review of the application. If this is a Tier I, II, or III application the technical review will be completed within sixty days of the administrative complete date. If this is a Tier IV application the technical review will be completed within 30 days of the administrative complete date. If additional technical information is required a notice of deficiency letter (NOD) will be issued. The time period between the issuance of the NOD and the receipt of the response is not counted in determinating the length of the technical review .The TCEQ will notify you after the technical review has been completed. In accordance with the statute, the TCEQ has mailed a notice of receipt of this Use Determination Application to the FREESTONE County Appraisal District. Please contact the Tax Relief for Pollution Control Property Program at (512) 239-3100 if you have any questions.

Sincerely,

Ron Hatlett
Tax Relief for Pollution Control Property Program

Buddy Garcia, *Chairman*
Larry R. Soward, *Commissioner*
Bryan W. Shaw, Ph.D., *Commissioner*
Glenn Shankle, *Executive Director*

TEXAS COMMISSION ON ENVIRONMENTAL QUALITY

Protecting Texas by Reducing and Preventing Pollution

May 1, 2008

CHIEF APPRAISER
FREESTONE COUNTY APPRAISAL DISTRICT
218 N MOUNT
FAIRFIELD, TX 75840

This letter is to inform you that on 5/1/2008, a final determination was issued with regard to Use Determination application 07-11966, filed by:

FREESTONE POWER GENERATION LP
FREESTONE ENERGY CENTER
13.6 MI N ON FM 488
FAIRFIELD, TX 75840

A copy of the use determination is included with this letter. House Bill 3121, enacted during the 77th Legislature Session, established a process for appealing a use determination. The Texas Commission on Environmental Quality (TCEQ) rules that implement the appeals process are at 30 TAC 17.25. Pursuant to 17.25(a)(1), an appeal must be filed within 20 days of receipt of the use determination. Should you choose to appeal the use determination, please submit a copy of your appeal to the TCEQ Tax Relief for Pollution Control Property program at the time of filing the appeal with the Chief Clerk of the commission.

In order to qualify for a tax exemption, the applicant must file an exemption request with your appraisal district. This exemption request must be accompanied by a copy of the positive use determination issued by the TCEQ. If you have any questions regarding this Use Determination or the appeals process, please call me at 512/239-3100.

Sincerely,

David Greer
Team Leader, Pollution Prevention

Buddy Garcia, *Chairman*
Larry R. Soward, *Commissioner*
Bryan W. Shaw, Ph.D., *Commissioner*
Glenn Shankle, *Executive Director*

TEXAS COMMISSION ON ENVIRONMENTAL QUALITY

Protecting Texas by Reducing and Preventing Pollution

May 1, 2008

DUFF & PHELPS LLC
GREG MAXIM
919 CONGRESS #1450
AUSTIN, TX 78701

This letter is to inform you that on 5/1/2008, the technical review of Use Determination Application 07-11966 was completed. This application is for:

FREESTONE POWER GENERATION LP
FREESTONE ENERGY CENTER
13.6 MI N ON FM 488
FAIRFIELD, TX 75840

The use determination is included with this letter. In order to request an exemption, a copy of this Use Determination, along with a completed exemption request form #50-248 (can be found at www.cpa.state.tx.us), must be provided to the Chief Appraiser of the appropriate appraisal district. This request must be made by April 30.

House Bill 3121, enacted during the 77th Legislative Session, established a process for appealing a use determination. The Texas Commission on Environmental Quality (TCEQ) rules that implement the appeals process are at 30 TAC 17.25. Pursuant to 17.25(a)(1), an appeal must be filed within 20 days of receipt of the use determination. Should you choose to appeal the use determination, please submit a copy of your appeal to the TCEQ Tax Relief for Pollution Control Property program at the time of filing the appeal with the Chief Clerk of the commission.

If you have any questions or require any additional information, please contact the Tax Relief for Pollution Control Property Program at (512) 239-3100.

Sincerely,

David Greer
Team Leader, Pollution Prevention

Buddy Garcia, *Chairman*
Larry R. Soward, *Commissioner*
Bryan W. Shaw, Ph.D., *Commissioner*
Glenn Shankle, *Executive Director*

TEXAS COMMISSION ON ENVIRONMENTAL QUALITY

Protecting Texas by Reducing and Preventing Pollution

USE DETERMINATION

The Texas Commission on Environmental Quality has reviewed Use Determination Application, 07-11966, filed by:

FREESTONE POWER GENERATION LP
FREESTONE ENERGY CENTER
13.6 MI N ON FM 488
FAIRFIELD TX 75840

The pollution control property/project listed in the Use Determination Application is:

This facility has four thermally efficient heat recovery steam generators (HRSGs) and two steam turbines. This application is a Tier IV application seeking a partial use determination for the HRSGs and the enhanced steam turbines.

The outcome of the review is:

A 100% positive use determination for the four Heat Recovery Steam Generators. This equipment is considered to be pollution control equipment and was installed to meet or exceed federal or state regulations.

A negative determination is issued for the two steam turbines. The use of the steam turbines does not provide an environmental benefit at the site. The steam turbines are not considered to be pollution control equipment.

Executive Director

May 1 2008
Date

TAX RELIEF FOR POLLUTION CONTROL PROPERTY: TECHNICAL REVIEW DOCUMENT

Reviewed By: RLH App. No.: 07 - 11966 Review Start Date: 4/8/2008

Company Name: FREESTONE POWER GENERATION LP
Facility Name: FREESTONE POWER GENERATION LP
County: FREESTONE Outstanding Fees: N
Batch/Voucher Number:B500156

ADMINISTRATIVE REVIEW

Administrative Complete Date:4/8/2008

TIER LEVEL
What Tier is this application? The application was filed as a Tier IV application. Is this the appropriate level?

The property listed on this application, Heat Recovery Steam Generators and a steam turbine are items B8 and B10 on the Equipment and Categories List. This application was filed as a Tier IV, Tier IV is the appropriate level for this application.

RELEVANT RULE, REGULATION, OR STATUTORY PROVISION
The rule listed in the application is: 40 CFR 60.44Da
The appropriate rule is: 40 CFR 60.44Da

Explain why this is the appropriate rule?

40 CFR 60.Subpart DA: Standards of Performance for New Stationary Sources. Standards of performance for Electric Utility Steam Generating Units for Which Construction is Commenced after September 18, 1978. This is an appropriate rule.

BRIEF DESCRIPTION OF PROPERTY
The property is described as:

This facility has four thermally efficient heat recovery steam generators (HRSGs) and two steam turbines. This application is a Tier IV application seeking a partial use determination for the HRSGs and the enhanced steam turbines.

Is an adequate description and purpose of the property provided? Does it list the anticipated environmental benefits? Are sketches and flow diagrams provided if needed?

An adequate description of the property was provided, and the purpose of the property was listed. The anticipated environmental benefit is listed. Sketches and flow diagrams were provided.

DECISION FLOWCHART(30 TAC 17.15(a))
Mark the appropriate boxes: Box 3 Box 5 Box 6(IV) Y Box 10(III) Box 12(I) Box 13(II)
PART B DECISION FLOWCHART (17.15(b))
Mark the appropriate boxes: Box 1Y Box 2 Y Box 3 Y

Describe how the property flowed through the Decision Flowchart:

Since the property is listed on Part B of the Equipment & Categories List this property leaves the Decision Flow Chart at Box 6. It passes through Box 1 of the Part B Decision Flow Chart with a yes answer. The use of this property at a combined cycle plant, as opposed to having a simple

cycle plant, provides an environmental benefit of reduced NOx emissions at the site. So there is a Yes answer for Box 2. Since there is a reduction in NOx emissions there is an environmental rule which is being met so there is a yes answer to Box 3. The steam turbine passes through Box 1 on the Part B Decision Flow Chart with a yes answer. Since the use of the steam turbine does not provide an environmental benefit at the site a no answer is the result of Box 2. The steam turbine is not eligible for a positive determination.

TIER III or IV APPLICATIONS

Does your calculation agree with the applicants?

No. The application contains a proposed formula for calculating the pollution control value of the HRSGs and the steam turbine. The formula is outcome determinative, and its focus is not on the pollution control aspect of the property. The Executive Director disagrees with this formula.

PROPERTY CATEGORIES AND COSTS

Is the table completed correctly? Has the applicant certified that all listed property became taxable for the first time after January 1, 1994? Is all information necessary for conducting the technical review included.

The table was completed correctly. The applicant certified that all listed property became taxable for the first time after January 1, 1994. All the information necessary for conducting the technical review was included on the application.

TECHNICAL DEFICIENCIES

Is the application complete as received: Y If the application was not administratively complete explain below when justifying the final decision in the final determination section. If the application was not technically complete then:

Provide the language to be used in the Notice of Deficiency (NOD) letter:

Summarize the NOD response:

Provide the language used in the second NOD letter:

Summarize the second NOD response:

Provide the language used in the thied NOD letter:

Summarize the third NOD response:

FINAL DETERMINATION

If the property description has been summarized enter the detailed property description:

This facility has four thermally efficient heat recovery steam generators (HRSGs) and two steam

turbines. This application is a Tier IV application seeking a partial use determination for the HRSGs and the enhanced steam turbines.

Provide the reason for your final determination:

The Heat Recovery Steam Generators meet all of the requirements of Chapter 17. A positive use determination based on the most appropriate formula should be issued for the Heat Recovery Steam Generators. The most appropriate formula has been determined by the Executive Director. A negative determination should be issued for the steam turbine. The use of the steam turbine does not result in there being an environmental benefit at the site.

Provide the language for the final determination.

A positive use determination of 100% for the four Heat Recovery Steam Generators. A negative determination is issued for the steam turbine. The use of the steam turbine does not provide an environmental benefit at the site. The steam turbine is not considered to be pollution control equipment.

Highlight the required signatures and establish the appropriate due dates.

Reviewed: Ron Hal **Date Signed:** 5/1/08

Peer Reviewed: Doug McCrostrow **Date Signed:** 5-1-08

Team Leader: Daniel **Date Signed:** 5/1/08

Section Manager: **Date Signed:** MAY 1 2008

Division Director: **Date Signed:** MAY 1 2008

Executive Director's Exhibit 3

Borger: Application and Use Determination Documents

TEXAS
COMMISSION
ON ENVIRONMENTAL
QUALITY

TEXAS COMMISSION ON ENVIRONMENTAL QUALITY
APPLICATION FOR USE DETERMINATION
FOR POLLUTION CONTROL PROPERTY

2008 MAY 23 AM 8:43
831771 ☐ 268
CHIEF CLERKS OFFICE

The TCEQ has the responsibility to determine whether a property is a pollution control property. A person seeking a use determination for pollution control property must complete the attached application or use a copy or similar reproduction. For assistance in completing this form refer to the TCEQ guidelines document, *Property Tax Exemptions for Pollution Control Property*, as well as 30 TAC §17, rules governing this program. For additional assistance please contact the Tax Relief for Pollution Control Property Program at (512) 239-3100. The application should be completed and mailed, along with a complete copy and appropriate fee, to: TCEQ MC-214, Cashiers Office, P.O. Box 13088, Austin, Texas 78711-3088.

1. GENERAL INFORMATION

A. What is the type of ownership of this facility?

- ☐ Corporation
- ☐ Sole Proprietor
- ☐ Partnership
- ☐ Utility
- ☑ Limited Partnership
- ☐ Other

B. Size of company: Number of Employees

- ☑ 1 to 99
- ☐ 1,000 to 1,999
- ☐ 100 to 499
- ☐ 2,000 to 4,999
- ☐ 500 to 999
- ☐ 5,000 or more

C. Business Description: **Combination Electric and Other Utility (4931)**

2. TYPE OF APPLICATION

- ☐ **Tier I $150 Application Fee**
- ☐ **Tier II $1,000 Application Fee**
- ☐ **Tier III $2,500 Application Fee**
- ☑ **Tier IV $500 Application Fee**

NOTE: Enclose a check, money order to the TCEQ, or a copy of the ePay receipt along with the applicaton to cover the required fee.

3. NAME OF APPLICANT

A. Company Name: Borger Energy Associates, LP

B. Mailing Address (Street or P.O. Box): 7001 Boulevard 26 Suite 310

C. City, State, ZIP: North Richland Hills, Texas 76180

4. PHYSICAL LOCATION OF PROPERTY REQUESTING A TAX EXEMPTION

A. Name of facility: Blackhawk Station

B. Type of Mfg Process or Service: Combination Electric and Other Utility (4931)

C. Street Address: 119 N. Spur Co-Gen Place

D. City, State, ZIP: Borger, TX 79008

E. Tracking Number Assigned by Applicant: DPBlackhawk B

F. Customer Number or Regulated Entity Number: N/A

5. APPRAISAL DISTRICT WITH TAXING AUTHORITY OVER PROPERTY

A. Name of Appraisal District: Hutchinson

B. Appraisal District Account Number: 990 (1000, 1010, 1100, 1120, 1140, 1160, 1180, 1200, 1220, 1240)

6. CONTACT NAME (must be provided)

A. Company/Organization Name:	Duff and Phelps LLC	
B. Name of Individual to Contact:	Dennis Deegear	
C. Mailing Address:	919 Congress Ave.	Suite 1450
D. City, State, ZIP:	Austin, TX 78701	
E. Telephone number and fax number:	(512) 671-5523	Fax (512) 671-5501
F. E-Mail address (if available):	dennis.deegear@duffandphelps.com	

7. RELEVANT RULE, REGULATION, OR STATUTORY PROVISION

Please reference Section 8. Each item is detailed with the proper statute, regulation, or environmental regulatory provision.

8. DESCRIPTION OF PROPERTY

Background

Blackhawk Station is a 225 MW cogeneration facility located in Borger, Texas owned by Borger Energy Associates LP. Blackhawk Station's design incorporates two Siemens 501D5A gas turbines, and two Deltak HRSGs. The exhaust from the combustion turbines is directed to the HRSGs where the thermal energy in the exhaust gases is recovered to generate steam. The high pressure steam produced in the HRSGs is exported to the adjoining Wood River Borger Refinery. Natural Gas serves as the fuel for each gas turbine.

Overview of Cogeneration Technology

The Facility is a cogeneration plant that consists of two gas-fired Combustion Turbines ("CTs") equipped with heat recovery steam generators (HRSG's) to capture heat from the turbine exhaust. Steam produced in the HRSG's provides steam for production purposes to the Facility's steam host, Wood River Borger Refinery LLC. Use of the otherwise wasted heat in the turbine exhaust gas results in higher plant thermal efficiency compared to other power generation technologies.

Combined heat and power (CHP) plants are often equipped with a steam turbine and have the added flexibility over a cogeneration plant to generate additional electricity if needed or sell its steam directly to an industrial facility commonly referred to as a "steam host". Additional efficiency is gained in CHP and cogeneration applications by using steam from the steam generator to serve direct thermal loads. Though increasing overall thermal efficiency, the choice of using steam for these applications instead of powering a steam-driven turbine reduces the electrical output of the plant.

The following overview describes technology that is common to both cogeneration and CHP electric power generation facilities. The significant difference between the two types of facilities is the use of the thermal energy generated by the combustion turbines. Because Blackhawk does not have a steam turbine and uses its thermal energy to supply steam to the Wood River Borger Refinery any portion of the

overview relating to steam turbine power generation does not apply to this facility.

The Brayton cycle is a constant pressure thermodynamic cycle that converts heat from combustion into work. A Brayton engine, as it applies to a gas turbine system, will consist of a fuel or gas compressor, combustion chamber, and an expansion turbine. Air is drawn into the compressor, mixed with the fuel, and ignited. The resulting work output is captured through a pump, cylinder, or turbine. Cogeneration systems typically make use of the waste heat from Brayton engines for steam production.

The Rankine cycle is a thermodynamic cycle that converts heat from an external source into work. In a Rankine cycle, external heat from an outside source is provided to a fluid in a closed-loop system. This fluid, once pressurized, converts the heat into work output using a turbine. The fluid most often used in a Rankine cycle is water (steam) due to its favorable properties, such as nontoxic and unreactive chemistry, abundance, and low cost, as well as its thermodynamic properties. The thermal efficiency of a Rankine cycle is usually limited by the working fluid. Steam generated in a cogeneration plant is typically sold to and directly used by a steam host.

By combining both gas and steam cycles, high input temperatures and low output temperatures can be achieved. A cogeneration plant has a thermodynamic cycle that operates between the gas turbine's high firing temperature and the waste heat temperature from its exhaust. This large range means that the Carnot efficiency of the cycle is high. The actual efficiency, while lower than this is still higher than that of either plant on its own. The thermal efficiency of a cogeneration plant can be measured as the net electric and steam power output of the plant divided by the heating value of the fuel.

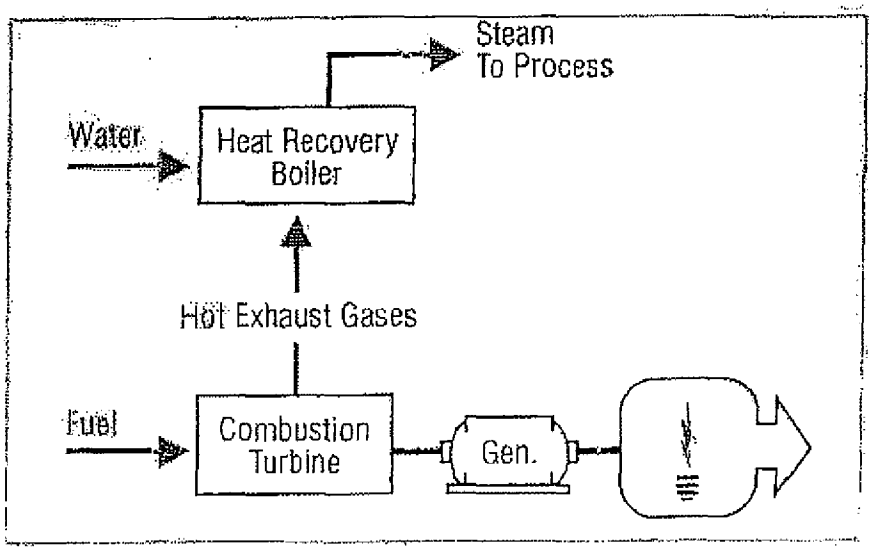

FIGURE 1 - Cogeneration Plant Configuration (1)

A single-train cogeneration plant consists of one CT, a generator, and a HSRG (See Figure 1 – Cogeneration Plant Configuration, below). Because of high thermal efficiency, high reliability, and low air emissions, cogeneration CT's and HRSG's have been the new resource of choice for bulk power generation and industrial steam production for well over a decade. Other attractive features include significant operational flexibility, the availability of relatively inexpensive power augmentation for peak period operation and relatively low carbon dioxide production.

Current Regulatory Authority for Output-Based Emissions

Innovative power technologies such as cogeneration technology offer enormous potential to improve efficiency and enhance the environmental footprint of power generation through the reduction and/or prevention of air emissions to the environment. Currently, two thirds of the fuel burned to generate electricity in traditional fossil-fired steam boilers is lost. Traditional U.S. power generation facility efficiencies have not increased since the 1950s and more than one fifth of the U.S. power plants are more than 50 years old. In addition, these facilities are the leading contributors to U.S. emissions of carbon dioxide, NOx, sulfur dioxide ("SO2"), and other contaminants into the air and water.

The ability to recognize and regulate the efficiency benefits of pollution reduction and/or prevention through the use of cogeneration technology is achieved through the use of Output-Based emissions standards, incorporated since September 1998 within the U.S. EPA's new source performance standards ("NSPS") for NOx, from both new utility boilers and new industrial boilers. Pursuant to section 407(c) of the Clean Air Act in subpart Da (Electric Utility Steam Generating Units) and subpart Db (Industrial-Commercial-Institutional Steam Generating Units) of 40 CFR part 60, the U.S. EPA revised the NOx emissions limits for steam generating units for which construction, modification, or reconstruction commenced after July 9, 1997 (3). Output-Based regulations are also exemplified by those used in the U.S. EPA's NOx Cap and Trade Program for the NOx State Implementation Plan ("SIP") Call of 1998, which uses units of measure such as lb/MWh generated or lb concentration ("ppm"), which relate to the emissions to the productive output – electrical generation of the process.(4)

The use of innovative technologies such as cogeneration units reduces fossil fuel use and leads to multi-media reductions in the environmental impacts of the production, processing transportation, and combustion of fossil fuels. In addition, reducing fossil fuel combustion is a pollution prevention measure that reduces emissions of all products of combustion, not just the target pollutant (currently NOx) of a federal regulatory program.

Authority to Expand Pollution Control Equipment & Categories in Texas

Under Texas House Bill 3732 ("HB3732") enacted in 2007, Section 11.31 of the Texas Tax Code is amended to add certain plant equipment and systems to the current list of air, water, or land pollution control devices exempt from property taxation in Texas.

Specifically, the language reads as follows:

SECTION 4. Section 11.31, Tax Code, is amended by adding Subsections (k), (l), and (m) to read as follows:
(k) The Texas Commission on Environmental Quality shall adopt rules establishing a nonexclusive list of facilities, devices, or methods for the control of air, water, or land pollution, which must include:
(1) coal cleaning or refining facilities;
(2) atmospheric or pressurized and bubbling or circulating fluidized bed combustion systems and gasification fluidized bed combustion combined-cycle systems;
(3) ultra-supercritical pulverized coal boilers;
(4) flue gas recirculation components;
(5) syngas purification systems and gas-cleanup units;
(6) enhanced heat recovery systems;
(7) exhaust heat recovery boilers;
(8) heat recovery steam generators;
(9) superheaters and evaporators;
(10) enhanced steam turbine systems;
(11) methanation;
(12) coal combustion or gasification byproduct and coproduct handling, storage, or treatment facilities;
(13) biomass cofiring storage, distribution, and firing systems;
(14) coal cleaning or drying processes, such as coal drying/moisture reduction, air jigging, precombustion decarbonization, and coal flow balancing technology;
(15) oxy-fuel combustion technology, amine or chilled ammonia scrubbing, fuel or emission conversion through the use of catalysts, enhanced scrubbing technology, modified combustion technology such as chemical looping, and cryogenic technology;
(16) if the United States Environmental Protection Agency adopts a final rule or regulation regulating carbon dioxide as a pollutant, property that is used, constructed, acquired, or installed wholly or partly to capture carbon dioxide from an anthropogenic source in this state that is geologically sequestered in this state;
(17) fuel cells generating electricity using hydrogen derived from coal, biomass, petroleum coke, or solid waste; and
(18) any other equipment designed to prevent, capture, abate, or monitor nitrogen oxides, volatile organic compounds, particulate matter, mercury, carbon monoxide, or any criteria pollutant.
(l) The Texas Commission on Environmental Quality by rule shall update the list adopted under Subsection (k) at least once every three years. An item may be removed from the list if the commission finds compelling evidence to support the conclusion that the item does not provide pollution control benefits.
(m) Notwithstanding the other provisions of this section, if the facility, device, or method for the control of air, water, or land pollution described in an application for an exemption under this section is a facility, device, or method included on the list adopted under Subsection (k), the executive director of the Texas Commission on Environmental Quality, not later than the 30th day after the date of receipt of the information required by Subsections (c)(2) and (3) and without regard to whether the information required by Subsection (c)(1) has been submitted, shall determine that the facility, device, or method described in the application is used wholly or partly as a facility, device, or method for the control of air, water, or land pollution and shall take the actions that are required by Subsection (d) in the event such a determination is made.

Under the TCEQ's recently updated "Tax Relief for Pollution Control Property – Application Instructions and Equipment and Categories List – Effective January 2008", the Equipment and Categories List - Part B ("ECL Part B") is a list of the pollution control property categories adopted and set forth in TTC Sec. 26.045(f). The taxpayer is to supply a pollution control percentage for the equipment listed in Part B via calculations demonstrating pollution control, prevention and/or reductions achieved by the listed equipment or systems.

The following property descriptions outline the environmental purpose, including

the anticipated environmental benefit of pollution control additions considered under the Application Instructions' ECL Part B that have been constructed and placed into use at the Facility as of its placed-in-service date, or installed subsequent to in-service since 1994:

Property Descriptions

Item #1 Cogeneration Gas Turbine Plant Heat Recovery Steam Generator ("HRSG") and Support Systems Tier IV B-8

40 CFR Part 60 Subparts DA and DB, NOx Limits for Electric Utility Steam Generating Units and Industrial-Commercial-Institutional Steam Generating Units for New Source Performance Standards ("NSPS").

TAC Rule 106.512, Standard Permit for Electric Generating Units (EGU)

NOTE: Permits issued under Texas Clean Air Act's Health & Safety Code Sections 382.011, applies to all electric generating units that emit air contaminants, regardless of size, and it is to reflect Best Available Control Technology ("BACT") for electric generating units on an output basis in pounds of NOx per megawatt hour, adjusted to reflect a simple cycle power plant.

The heat recovery steam generator ("HRSG") found in the Facility is a heat exchanger that recovers heat from a hot gas stream. A common application for an HRSG is in a cogeneration power station, where hot exhaust from a gas turbine is fed to an HRSG to generate steam which can either be used to drive a steam turbine or be sold directly to a steam host. This combination produces electricity in a more thermally efficient manner than either the gas turbine or steam turbine alone.

The HRSG is also an important component in cogeneration plants. Cogeneration plants typically have a higher overall efficiency in comparison to a combined cycle plant.

The Facility's HRSGs consist of three major components: the Evaporator, Superheater, and Economizer. The different components are put together to meet the operating requirements of the unit. Modular HRSGs normally consist of three sections: an LP (low pressure) section, a reheat/IP (intermediate pressure) section, and an HP (high pressure) section. The reheat and IP sections are separate circuits inside the HRSG. The IP steam partly feeds the reheat section. Each section has a steam drum and an evaporator section where water is converted to steam. This steam then passes through superheaters to raise the temperature and pressure past the saturation point.

Pollution Control Percentage Calculation: Avoided Emissions Approach

To calculate the percentage of the equipment or category deemed to be pollution control equipment, the Avoided Emissions approach has been used. This approach relies on thermal output differences between conventional electric power and steam generation equipment and the cogeneration system at the Facility. Specifically, the percentage is determined by calculating the displacement of emissions associated with the Facility's thermal output and subtracting these emissions from a baseline emission rate. These displaced emissions are emissions that would have been generated by the same thermal output from conventional equipment.

Greater energy efficiency reduces all air contaminant emissions, including the

greenhouse gas, carbon dioxide. Higher efficiency processes include cogeneration, combined-cycle, and CHP generation. For electric generation the energy efficiency of the process expressed in terms of British thermal units ("BTU's") per Kilowatt-hour ("kWh"). Lower fuel consumption associated with increased fuel conversion efficiency reduces emissions across the board – that is NOx, SOx, particulate matter, hazardous air pollutants, and greenhouse gas emissions such as CO2.

In calculating the percent exempt for the listed items from the ECL-Part B, we utilized Output-Based NOx allocation method for both power generation projects that replaced existing facilities and "Greenfield" steam generation facilities. We looked at the various fossil fuel technologies in use today and chose the baseline electric power generation facility to be a natural gas-fired turbine driven generator without waste heat recovery. The construction of the Blackhawk station and its ability to produce steam replaced some of the steam production generated by the boiler steam plant located at the Wood River Borger Refinery. With this in mind the baseline steam generation facility selected is a gas-fired industrial steam boiler operated without the thermal benefit of waste heat recovery similar to the equipment operated by the refinery. We benchmarked this conventional generation to the subject natural gas-fired cogeneration equipment at the Facility. By doing so, we narrowed the heat rate factors as much as possible to be conservative and uniform in modeling. The benchmark heat rate factor is the following:

Natural Gas-Fired Turbine and Industrial Steam Boiler: 8,864 BTU's/kWh

This baseline heat rate purposely omits other fossil fuel sources in order to eliminate impurity type characteristics, which in turn eliminated the NOx emission and cost of control differences of each fossil fuel and generator type. Comparing the emissions impact of different energy generation facilities is concise when emissions are measured per unit of useful energy output. For the purpose of our calculations, we converted the energy output of the steam to units of kWh, and compared the total emission rate to the baseline facility.

The comparison steps to calculate the NOx reduction is as follows:

Calculation (Reference Schedule A)

Step 1 – Subject Output-Based Limit Calculation (lbs NOx / MWh)

(Input-based Limit (lbs NOx/MMBTU)) X (Heat Rate (Btu/kWh)) / (1,000,000 Btu / 1,000 kWh) = Output: (lbs NOx/MWh),

Step 2 – Subject Output Conversion Calculation (NOx Tons / Year)

(Output (lbs NOx/MWh) X (Unit Design Capacity (MW)) X (Capacity Factor) X ((365 Days) X (24 hrs/day)) / 2,000 lbs = Output: (NOx Tons/Year)

Step 3 – Baseline Output-Based Limit Calculation (lbs NOx / MWh)

(Input-based Limit (lbs NOx/MWh)) X (Heat Rate (Btu/kWh)) / (1,000,000 Btu / 1,000 kWh) = Output: (lbs NOx/MWh)

Step 4 – Baseline Output Conversion Calculation (NOx Tons / Year)

(Output (lbs NOx/MMBtu) X (Unit Design Capacity (MW)) X (Capacity Factor) X ((365 Days) X (24 hrs/day)) / 2,000 lbs = Output: (NOx Tons/Year)

Step 5 – Percent NOx Reduction Calculation

$((\text{Output Baseline})_{\text{step 4}} - (\text{Output Subject}))_{\text{step 2}} \ / \ (\text{Output Subject})_{\text{step 2}}$ = % Reduction Output Subject

Step 6 – Percent Exempt Calculation

(Total Subject Facility Cost) X (% NOx Reduction) = Capital Cost of NOx Avoidance

Step 7 – Percent Exempt Calculation

Total Cost of NOx Avoidance / Total Cost of HB 3732 Equipment = % Exempt

- If % Exempt is greater than 100% HB 3732 Equipment is 100% Exempt
- If % Exempt is less than 100% then HB 3732 Equipment is partially exempt at the Step 6 calculation.

NOTE: See the attached calculation sheet for the details regarding Facility-specific calculations and property tax exemption percentage results based upon these calculations.

REFERENCES

1. "Output-Based Regulations: A Handbook for Air Regulators", U.S. Environmental Protection Agency, Office of Atmospheric Programs – Climate Protection Partnerships Division, August, 2004, p.4.

2. "Output-Based Emissions Standards; Advancing Innovative Energy Technologies", Northeast-Midwest Institute; 2003, p. 9.

3. IBID, p.13.

4."Output-Based Regulations: A Handbook for Air Regulators", U.S. Environmental Protection Agency, Office of Atmospheric Programs – Climate Protection Partnerships Division, August, 2004, p.4.

5. http://www.cogeneration.net/Combined_Cycle_Power_Plants.htm

6. "Output-Based Emissions Standards; Advancing Innovative Energy Technologies", Northeast-Midwest Institute; 2003, p. 9.

9. PARTIAL PERCENTAGE CALCULATION

N/A.

10. PROPERTY CATEGORIES AND COSTS

See attached Schedule 10.

11. EMISSION REDUCTION INCENTIVE GRANT

Will an application for an Emission Reduction Incentive Grant be on file for this property/project:

[ ] Yes [X] No

12. APPLICATION DEFICIENCIES

After an initial review of the application, the TCEQ may determine that the information provided with the application is not sufficient to make a use determination. The TCEQ may send a notice of deficiency, requesting additional information that must be provided within 30 days of written notice.

13. FORMAL REQUEST FOR SIGNATURE

By signing this application, you certify that this information is true to the best of your knowledge and belief.

NAME: Donna Degan DATE: 3/27/08

TITLE: Vice President

COMPANY: Duff & Phelps LLC

Under Texas Penal Code, Section 37.10, if you make a false statement on this application, you could receive a jail term of up to one year and a fine up to $2,000, or a prison term of two to 10 years and a fine of up to $5,000.

14. DELINQUENT FEE/PENALTY PROTOCOL

This form will not be processed until all delinquent fees and/or penalties owed to the TCEQ or the Office of the Attorney General on behalf of the TCEQ are paid in accordance with the Delinquent Fee and Penalty Protocol. (Effective 9/1/2006)

Blackhawk Station
119 N. Spur Co-Gen Place
TCEQ Use Determination Application - 2008
Scheule 10
TierIV

10. PROPERTY CATEGORIES AND COST

PROPERTY	PROJECT ID. NO.	IN SERVICE DATE	TAXABLE ON OR BEFORE 1/1/94? (Y / N)	TIER IV DECISION FLOW CHART BOX	ECL NUMBER	ESTIMATED PURCHASE COST	% EXEMPT	EXEMPT COST
Heat Recovery Steam Generators (HRSG)	1	1998	N	3	B-8	$13,906,514	100%	$13,906,514
					Tier IV Total	$13,906,514		$13,906,514

Horizon Energy Associates LP
Hunt Peak Station
Scenario A - 225MW Thermal Energy Cogeneration

Subject Details:

Average Heat Rate (1)	7,781 (Btu/kWh)
NO_x Emissions (2)	15 ppm
Plant Capacity (3)	225 MW
Capacity Factor (4)	78.50%
Technology (5)	Cogeneration
Total Subject Facility Cost (6)	$128,687,174
Total Cost of Tier IV Equipment (7)	$13,906,514

Baseline Details:

Average Heat Rate (8)	8,864 (Btu/kWh)
Technology (9)	Industrial Steam Boiler

STEP 1
Subject Output Based Emission Calculation (NO_x/MWh)

Input-based Limit (lbs NO_x/MMBtu)	x	Heat Rate (Btu/kWh)	/	Unit Conversions (1,000,000 Btu / 1000 kWh)	=	Output-based Limit (lbs NO_x/MWh)
0.0551		7,781		1,000		0.4287

STEP 2
Subject Output Based Emission Calculation (NO_x Tons/Year)

Output-based Limit (lbs NO_x/MWh)	x	Capacity (MW)	x	Capacity Factor	x	Unit Conversions (365 days * 24 Hours / 2,000 lbs)	=	Output NO_x (Tons/Year)
0.4287		225		78.50%		4		302.9

STEP 3
Baseline Output Based Emission Calculation (NO_x/MWh)

Input-based Limit (lbs NO_x/MMBtu)	x	Heat Rate (Btu/kWh)	/	Unit Conversions (1,000,000 Btu / 1000 kWh)	=	Output-based Limit (lbs NO_x/MWh)
0.0551		8,864		1,000		0.4884

STEP 4
Baseline Output Conversion Calculation (NO_x Tons/Year)

Output-based Limit (lbs NO_x/MWh)	x	Capacity (MW)	x	Capacity Factor	x	Unit Conversions (365 days * 24 Hours / 2,000 lbs)	=	Output NO_x (Tons/Year)
0.4884		225		78.50%		4		345.1

STEP 5
Percent NO_x Reduction Calculation

(Output Baseline 345.1	-	Output Subject) 302.9	/	Output Baseline 345.1	=	% NO_x Reduction 15.9%

STEP 6
Percent Subject Cost Calculation

Total Subject Unit Cost $128,687,174	x	% NO_x Reduction 15.9%	=	Capital Cost of NO_x Avoidance $17,187,517

STEP 7
Percent Exempt Calculation

Total Cost of NO_x Avoidance $17,187,517	/	Total Cost of Tier 3/4 Equipment $13,906,514	=	% Exempt 128.6%

Conclude	100%

(1) - Heat rate represents plant actual heat rate (HRIV) based on the energy value of the electricity and steam generated provided by the client
(2) - NO_x emissions is the actual NO_x pollutant produce in ppm and was provided by the client
(3) - Plant capacity is the average nominal capacity and was provided by the client
(4) - Capacity factor represents an average annual capacity factor and was provided by the client
(5) - Technology represents the actual technology of the Subject
(6) - Total subject facility cost represents the total cost to build the entire facility and it was determined based on data providy by the client
(7) - Total Tier IV equipment was determined by allocating the eligible TCEO ECL part II equipment and their associated cost from actual data provide by the client
(8) - Baseline heat rate was developed using a combination of simple cycle electric power and actual plant industrial boiler steam generation
(9) - Baseline technology represents the boiler technology used by the host refinery for steam production. Steam produced by the subject cogeneration facility has displaced some of the steam produced by the host refinery resulting in less fuel consumption by the refinery's boiler equipment and lower overall NO_x emissions

DUFF & PHELPS

Dennis Deegear
Vice President
Phone:(512) 671-3523
dennis.deegear@duffandphelps.com

March 26, 2008

TCEQ - Cashiers Office MC-214
Building A
12100 Park 35 Circle
Austin, Texas 78753

Subject: Application for Use Determination for Pollution Control Property
Blackhawk Station - 119 N. Spur Co-Gen Place Borger, TX 79008

Enclosed please find one application (the "Application") for property tax exemptions for certain qualifying pollution control property at the Blackhawk Station Project (the "Facility") in Hutchinson County, Texas.

Pursuant to Title 30 of Chapter 17 of the Texas Administrative Code, the Application has been prepared using the Texas Commission on Environmental Quality ("TCEQ") Application for Use Determination for Pollution Control Property. The enclosed application is a Tier IV Application.

Submission of this Application is required as a process step in the TCEQ's pollution control certification process for tax exemption of certain assets used in pollution control capacities within the Facility. As outlined by the application instructions, the fee for this Tier IV Application is $500. Enclosed please find a check for $500 for the Application processing.

The Application can be summarized as follows:

Property	Description	Estimated Cost
Tier IV	See Attached Schedule	$13,906,514

Please send one copy of the completed property tax exemption Use Determination to the following address:

Duff and Phelps LLC
c/o Dennis Deegear
919 Congress Ave.
Suite 1450
Austin, TX 78701

If you have any questions regarding the Application or the information supplied with these Application, please contact Dennis Deegear of Duff & Phelps, LLC at (512) 671-5523 or e-mail at dennis.deegear@duffandphelps.com.

Very truly yours,

DUFF & PHELPS LLC

Signature:

Name: Dennis Deegear

Title: Vice President

Enclosures

Buddy Garcia, *Chairman*
Larry R. Soward, *Commissioner*
Bryan W. Shaw, Ph.D., *Commissioner*
Glenn Shankle, *Executive Director*

TEXAS COMMISSION ON ENVIRONMENTAL QUALITY

Protecting Texas by Reducing and Preventing Pollution

May 1, 2008

CHIEF APPRAISER
HUTCHINSON COUNTY APPRAISAL DISTRICT
PO BOX 5065
BORGER, TX 79008

This letter is to inform you that on 5/1/2008, a final determination was issued with regard to Use Determination application 07-11971, filed by:

BORGER ENERGY ASSOCIATES LP.
BORGER ENERGY BLACKHAWK STATION
119 N. SPUR CO-GEN PLACE
BORGER, TX 79008

A copy of the use determination is included with this letter. House Bill 3121, enacted during the 77th Legislature Session, established a process for appealing a use determination. The Texas Commission on Environmental Quality (TCEQ) rules that implement the appeals process are at 30 TAC 17.25. Pursuant to 17.25(a)(1), an appeal must be filed within 20 days of receipt of the use determination. Should you choose to appeal the use determination, please submit a copy of your appeal to the TCEQ Tax Relief for Pollution Control Property program at the time of filing the appeal with the Chief Clerk of the commission.

In order to qualify for a tax exemption, the applicant must file an exemption request with your appraisal district. This exemption request must be accompanied by a copy of the positive use determination issued by the TCEQ. If you have any questions regarding this Use Determination or the appeals process, please call me at 512/239-3100.

Sincerely,

David Greer
Team Leader, Pollution Prevention

Buddy Garcia, *Chairman*
Larry R. Soward, *Commissioner*
Bryan W. Shaw, Ph.D., *Commissioner*
Glenn Shankle, *Executive Director*

TEXAS COMMISSION ON ENVIRONMENTAL QUALITY

Protecting Texas by Reducing and Preventing Pollution

May 1, 2008

DUFF & PHELPS LLC
DENNIS DEEGEAR
919 CONGRESS #1450
AUSTIN, TX 78701

This letter is to inform you that on 5/1/2008, the technical review of Use Determination Application 07-11971 was completed. This application is for:

BORGER ENERGY ASSOCIATES LP
BORGER ENERGY BLACKHAWK STATION
119 N. SPUR CO-GEN PLACE
BORGER, TX 79008

The use determination is included with this letter. In order to request an exemption, a copy of this Use Determination, along with a completed exemption request form #50-248 (can be found at www.cpa.state.tx.us), must be provided to the Chief Appraiser of the appropriate appraisal district. This request must be made by April 30.

House Bill 3121, enacted during the 77th Legislative Session, established a process for appealing a use determination. The Texas Commission on Environmental Quality (TCEQ) rules that implement the appeals process are at 30 TAC 17.25. Pursuant to 17.25(a)(1), an appeal must be filed within 20 days of receipt of the use determination. Should you choose to appeal the use determination, please submit a copy of your appeal to the TCEQ Tax Relief for Pollution Control Property program at the time of filing the appeal with the Chief Clerk of the commission.

If you have any questions or require any additional information, please contact the Tax Relief for Pollution Control Property Program at (512) 239-3100.

Sincerely,

David Greer
Team Leader, Pollution Prevention

Buddy Garcia, *Chairman*
Larry R. Soward, *Commissioner*
Bryan W. Shaw, Ph.D., *Commissioner*
Glenn Shankle, *Executive Director*

TEXAS COMMISSION ON ENVIRONMENTAL QUALITY

Protecting Texas by Reducing and Preventing Pollution

USE DETERMINATION

The Texas Commission on Environmental Quality has reviewed Use Determination Application 07-11971, filed by:

BORGER ENERGY ASSOCIATES LP
BORGER ENERGY BLACKHAWK STATION
119 N. SPUR CO-GEN PLACE
BORGER TX 79008

The pollution control property/project listed in the Use Determination Application is:

This facility has two thermally efficient heat recovery steam generators (HRSGs). This application is a Tier IV application seeking a partial use determination for the two HRSGs.

The outcome of the review is:

A 100% positive use determination for the two Heat Recovery Steam Generators. This equipment is considered to be pollution control equipment and was installed to meet or exceed federal or state regulations.

Executive Director

May 1, 2008
Date

Buddy Garcia, *Chairman*
Larry R. Soward, *Commissioner*
Bryan W. Shaw, Ph.D., *Commissioner*
Glenn Shankle, *Executive Director*

TEXAS COMMISSION ON ENVIRONMENTAL QUALITY

Protecting Texas by Reducing and Preventing Pollution

March 31, 2008

CHIEF APPRAISER
HUTCHINSON COUNTY APPRAISAL DISTRICT
PO BOX 5065
BORGER TX 79008

This letter is to inform you that a Use Determination Application has been filed by:

BORGER ENERGY ASSOCIATES LP

for:

BORGER ENERGY BLACKHAWK STATION
119 N. SPUR CO-GEN PLACE
BORGER TX 79008-

Appraisal District Account Number: **990(1000, 1010, 1100, 1120ETC**

This facility is located in **HUTCHINSON** County.

A complete copy of the application is included with this letter. We recommend that a copy of this application be shared with the person who conducts the appraisal of this property.

This application has been assigned a tracking number of **07 -11971**. Please contact the Tax Relief for Pollution Control Property Program at (512) 239-3100 if you have any questions.

Sincerely,

Ron Hallett
Tax Relief for Pollution Control Property Program

Buddy Garcia, *Chairman*
Larry R. Soward, *Commissioner*
Bryan W. Shaw, Ph.D., *Commissioner*
Glenn Shankle, *Executive Director*

TEXAS COMMISSION ON ENVIRONMENTAL QUALITY

Protecting Texas by Reducing and Preventing Pollution

April 8, 2008

DUFF & PHELPS LLC
DENNIS DEEGEAR
919 CONGRESS #1450
AUSTIN TX 78701

This letter is to inform you that on 4/8/2008, Use Determination Application, 07-11971 (self assigned tracking number DPBLACKHAWK B), was declared to be administratively complete. This application was filed for the following facility:

BORGER ENERGY BLACKHAWK STATION
119 N. SPUR CO-GEN PLACE
BORGER TX 79008

The next step in the Use Determination Application process is the technical review of the application. If this is a Tier I, II, or III application the technical review will be completed within sixty days of the administrative complete date. If this is a Tier IV application the technical review will be completed within 30 days of the administrative complete date. If additional technical information is required a notice of deficiency letter (NOD) will be issued. The time period between the issuance of the NOD and the receipt of the response is not counted in determinating the length of the technical review .The TCEQ will notify you after the technical review has been completed. In accordance with the statute, the TCEQ has mailed a notice of receipt of this Use Determination Application to the HUTCHINSON County Appraisal District. Please contact the Tax Relief for Pollution Control Property Program at (512) 239-3100 if you have any questions.

Sincerely,

Ron Hatlett
Tax Relief for Pollution Control Property Program

TAX RELIEF FOR POLLUTION CONTROL PROPERTY: TECHNICAL REVIEW DOCUMENT

Reviewed By: RLH App. No.: 07 - 11971 Review Start Date: 4/8/2008

Company Name: BORGER ENERGY ASSOCIATES LP
Facility Name: BORGER ENERGY BLACKHAWK STATION
County: HUTCHINSON Outstanding Fees: N
Batch/Voucher Number:B500156

ADMINISTRATIVE REVIEW

Administrative Complete Date:4/8/2008

TIER LEVEL
What Tier is this application? The application was filed as a Tier IV application. Is this the appropriate level?

The property listed on this application, Heat Recovery Steam Generators, is item B8 on the Equipment and Categories List. This application was filed as a Tier IV. Tier IV is the appropriate level for this application.

RELEVANT RULE, REGULATION, OR STATUTORY PROVISION
The rule listed in the application is: 40 CFR 60.44Da
The appropriate rule is: 40 CFR 60.44Da

Explain why this is the appropriate rule?

40 CFR 60.Subpart DA: Standards of Performance for New Stationary Sources. Standards of performance for Electric Utility Steam Generating Units for Which Construction is Commenced after September 18, 1978. This is an appropriate rule.

BRIEF DESCRIPTION OF PROPERTY
The property is described as:

This facility has two thermally efficient heat recovery steam generators (HRSGs). This application is a Tier IV application seeking a partial use determination for the two HRSGs.

Is an adequate description and purpose of the property provided? Does it list the anticipated environmental benefits? Are sketches and flow diagrams provided if needed?

An adequate description of the property was provided, and the purpose of the property was listed. The anticipated environmental benefit is listed. Sketches and flow diagrams were provided.

DECISION FLOWCHART(30 TAC 17.15(a))
Mark the appropriate boxes: Box 3 Box 5 Box 6(IV) Y Box 10(III) Box 12(I) Box 13(II)
PART B DECISION FLOWCHART (17.15(b))
Mark the appropriate boxes: Box 1Y Box 2 Y Box 3 Y

Describe how the property flowed through the Decision Flowchart:

Since the property is listed on Part B of the Equipment & Categories List this property leaves the Decision Flow Chart at Box 6. It passes through Box 1 of the Part B Decision Flow Chart with a yes answer. The use of this property at a combined cycle plant, as opposed to having a simple cycle plant, provides an environmental benefit of reduced NOx emissions at the site. So there is a

Yes answer for Box 2. Since there is a reduction in NOx emissions there is an environmental rule which is being met so there is a yes answer to Box 3.

TIER III or IV APPLICATIONS

Does your calculation agree with the applicants?

No. The application contains a proposed formula for calculating the pollution control value of the HRSGs and the steam turbine. The formula is outcome determinative, and its focus is not on the pollution control aspect of the property. The Executive Director disagrees with this formula.

PROPERTY CATEGORIES AND COSTS

Is the table completed correctly? Has the applicant certified that all listed property became taxable for the first time after January 1, 1994? Is all information necessary for conducting the technical review included.

The table was completed correctly. The applicant certified that all listed property became taxable for the first time after January 1, 1994. All the information necessary for conducting the technical review was included on the application.

TECHNICAL DEFICIENCIES

Is the application complete as received: Y If the application was not administratively complete explain below when justifying the final decision in the final determination section. If the application was not technically complete then:

Provide the language to be used in the Notice of Deficiency (NOD) letter:

Summarize the NOD response:

Provide the language used in the second NOD letter:

Summarize the second NOD response:

Provide the language used in the thied NOD letter:

Summarize the third NOD response:

FINAL DETERMINATION

If the property description has been summarized enter the detailed property description:

This facility has two thermally efficient heat recovery steam generators (HRSGs). This application is a Tier IV application seeking a partial use determination for the two HRSGs.

Provide the reason for your final determination:

The Heat Recovery Steam Generators meet all of the requirements of Chapter 17. A positive use determination based on the most appropriate formula should be issued for the Heat Recovery Steam Generators. The most appropriate formula has been determined by the Executive Director.

Provide the language for the final determination.

A positive use determination of 100% for the two Heat Recovery Steam Generators.

Highlight the required signatures and establish the appropriate due dates.

Reviewed: Ronald Rotkey **Date Signed:** 5/1/08

Peer Reviewed: Gary M. Arthur **Date Signed:** 5-1-08

Team Leader: [illegible] **Date Signed:** 5/1/08

Section Manager: [illegible] **Date Signed:** MAY 1 2008

Division Director: [illegible] **Date Signed:** MAY 1 2008

Executive Director's Exhibit 4

Brazos: Application and Use Determination Documents

TEXAS
COMMISSION
ON ENVIRONMENTAL
QUALITY

2009 MAY 23 AM 8: 43

CHIEF CLERKS OFFICE

TEXAS COMMISSION ON ENVIRONMENTAL QUALITY
APPLICATION FOR USE DETERMINATION
FOR POLLUTION CONTROL PROPERTY

The TCEQ has the responsibility to determine whether a property is a pollution control property. A person seeking a use determination for pollution control property must complete the attached application or use a copy or similar reproduction. For assistance in completing this form refer to the TCEQ guidelines document, *Property Tax Exemptions for Pollution Control Property*, as well as 30 TAC §17, rules governing this program. For additional assistance please contact the Tax Relief for Pollution Control Property Program at (512) 239-3100. The application should be completed and mailed, along with a complete copy and appropriate fee, to: TCEQ MC-214, Cashiers Office, P.O. Box 13088, Austin, Texas 78711-3088.

1. GENERAL INFORMATION

A. What is the type of ownership of this facility?

- ☐ Corporation
- ☐ Partnership
- ☑ Limited Partnership
- ☐ Sole Proprietor
- ☐ Utility
- ☐ Other

B. Size of company: Number of Employees

- ☑ 1 to 99
- ☐ 100 to 499
- ☐ 500 to 999
- ☐ 1,000 to 1,999
- ☐ 2,000 to 4,999
- ☐ 5,000 or more

C. Business Description: **Electric Power Generation**

2. TYPE OF APPLICATION

- ☐ **Tier I $150 Application Fee**
- ☐ **Tier II $1,000 Application Fee**
- ☐ **Tier III $2,500 Application Fee**
- ☑ **Tier IV $500 Application Fee**

NOTE: Enclose a check, money order to the TCEQ, or a copy of the ePay receipt along with the applicaton to cover the required fee.

3. NAME OF APPLICANT

A. Company Name: Brazos Valley Energy L.P.

B. Mailing Address (Street or P.O. Box): 717 Texas, Ste. 1000

C. City, State, ZIP: Houston, TX 77002

4. PHYSICAL LOCATION OF PROPERTY REQUESTING A TAX EXEMPTION

A. Name of facility: Brazos Valley Energy

B. Type of Mfg. Process or Service: Electric Power Generation

C. Street Address: 3440 Lockwood Road

D. City, State, ZIP: Richmond, Texas 77469

E. Tracking Number Assigned by Applicant: DPBrazosValley B

F. Customer Number or Regulated Entity Number: N/A

5. APPRAISAL DISTRICT WITH TAXING AUTHORITY OVER PROPERTY

A. Name of Appraisal District: Fort Bend

B. Appraisal District Account Number: 0348-00-000-0203-901; 0348-00-000-0204-901;

6. CONTACT NAME (must be provided)

A. Company/Organization Name:	Duff and Phelps LLC	
B. Name of Individual to Contact:	Greg Maxim	
C. Mailing Address:	919 Congress Ave.	Suite 1450
D. City, State, ZIP:	Austin, TX 78701	
E. Telephone number and fax number:	(512) 671-5580	Fax (512) 671-5501
F. E-Mail address (if available):	gregory.maxim@duffandphelps.com	

7. RELEVANT RULE, REGULATION, OR STATUTORY PROVISION

Please reference Section 8. Each item is detailed with the proper statute, regulation, or environmental regulatory provision.

8. DESCRIPTION OF PROPERTY

Background

The Brazos Valley Power Plant is located in Richmond, Texas. Two combustion turbines are routed to two heat recovery steam generators which provide steam to one steam turbine. The Brazos Valley Power Plant sells the power it generates to Calpine Commercial Operations. The facility is located in Richmond, TX and has been in operation since May 2003. The facility has a baseload capacity of 508 megawatts and is 100 percent owned by Calpine. The technology employed is a natural gas-fired, combined-cycle GE combustion and steam turbines. Brazos Valley Power Plant serves the ERCOT region.

Overview of Combined Cycle Technology

The Facility is a combined-cycle gas turbine power plant consisting of gas Combustion Turbines ("CTs") equipped with heat recovery steam generators to capture heat from the gas turbine exhaust. Steam produced in the heat recovery steam generators powers a steam turbine generator(s) to produce additional electric power. The use of otherwise wasted heat in the turbine exhaust gas results in higher plant thermal efficiency compared to other power generation technologies. Combined-cycle plants currently entering service can convert over 50% of the chemical energy of natural gas into electricity (HHV basis). Employment of the Brayton Thermodynamic Cycle (Gas Turbine Cycle) in combination with the Rankine Thermodynamic Cycle results in the improved efficiency.

The Rankine cycle is a thermodynamic cycle that converts heat from an external source into work. In a Rankine cycle, external heat from an outside source is provided to a fluid in a closed-loop system. This fluid, once pressurized, converts the heat into work output using a turbine. The fluid most often used in a Rankine cycle is water (steam) due to its favorable properties, such as nontoxic and unreactive chemistry, abundance, and low cost, as well as its thermodynamic properties. The thermal efficiency of a Rankine cycle is usually limited by the working fluid. Without pressure reaching super critical the temperature range the Rankine cycle can operate over is quite small, turbine entry temperatures are

typically 565°C (the creep limit of stainless steel) and condenser temperatures are around 30°C. Traditional coal fired and natural gas fired Rankine cycle power generation plants are limited by the inlet pressures and temperatures of the steam turbine design and the condenser vacuum and temperature. The Rankine cycle can achieve thermodynamic cycle efficiency (useful work obtained as a percentage of fuel input) ranging from 33% to 36%. However, if the Rankine cycle is used in conjunction with or as the "bottoming" cycle to the Brayton cycle the efficiencies can be improved as discussed below. This low turbine entry temperature (compared with a gas turbine) is why the Rankine cycle is often used as a bottoming cycle in combined cycle gas turbine power stations.

The Brayton cycle is a constant pressure thermodynamic cycle that converts heat from combustion into work. A Brayton engine, as it applies to a gas turbine system, will consist of a fuel or gas compressor, combustion chamber, and an expansion turbine. Air is drawn into the compressor, mixed with the fuel, and ignited. The resulting work output is captured through a pump, cylinder, or turbine. A Brayton engine forms half of a combined cycle system, which combines with a Rankine engine to further increase overall efficiency. Cogeneration systems typically make use of the waste heat from Brayton engines, typically for hot water production or space heating.

By combining both gas and steam cycles, high input temperatures and low output temperatures can be achieved. The efficiency of the cycles are additive, because they are powered by the same fuel source. A combined-cycle plant has a thermodynamic cycle that operates between the gas turbine's high firing temperature and the waste heat temperature from the condensers of the steam cycle. This large range means that the Carnot efficiency of the cycle is high. The actual efficiency, while lower than this is still higher than that of either plant on its own. The thermal efficiency of a combined-cycle power plant is the net power output of the plant divided by the heating value of the fuel. Combined cycle power generation plants that produce only electricity can achieve thermodynamic efficiencies in the range of 53% to 59%, with the normal range being 53% to 56%. Combined cycle power generation plants that produce steam or hot water in conjunction with electric power can improve upon those values by "offsetting" fired boiler operations within adjacent industrial complexes. These facilities are known as combined cycle cogeneration units.

A single-train combined-cycle plant consists of one gas turbine generator, a heat recovery steam generator (HSRG) and a steam turbine generator ("1 x 1" configuration). As an example, an "FA-class" combustion turbine, the most common technology in use for large combined-cycle plants within the state of Texas and other locations throughout the United States, represents a plant with approximately 270 megawatts of capacity. ISO references ambient conditions at 14.7 psia, 59 F, and 60% relative humidity.

See Figure 1 – Standard Combined-Cycle Configuration, below.

It is common to find combined-cycle plants using two or even three gas turbine generators and heat recovery steam generators feeding a single, proportionally larger steam turbine generator. Larger plant sizes result in economies of scale for construction and operation, and designs using multiple combustion turbines provide improved part-load efficiency. A 2 x 1 configuration using FA-class technology will produce about 540 megawatts of capacity at International Organization for Standardization ("ISO") conditions. ISO references ambient conditions at 14.7 psia, 59 F, and 60% relative humidity.

Because of high thermal efficiency, high reliability, and lower air emissions, combined-cycle gas turbines have been the new resource of choice for bulk power generation for well over a decade. Other attractive features include significant operational flexibility, the availability of relatively inexpensive power augmentation for peak period operation and relatively low carbon dioxide production.

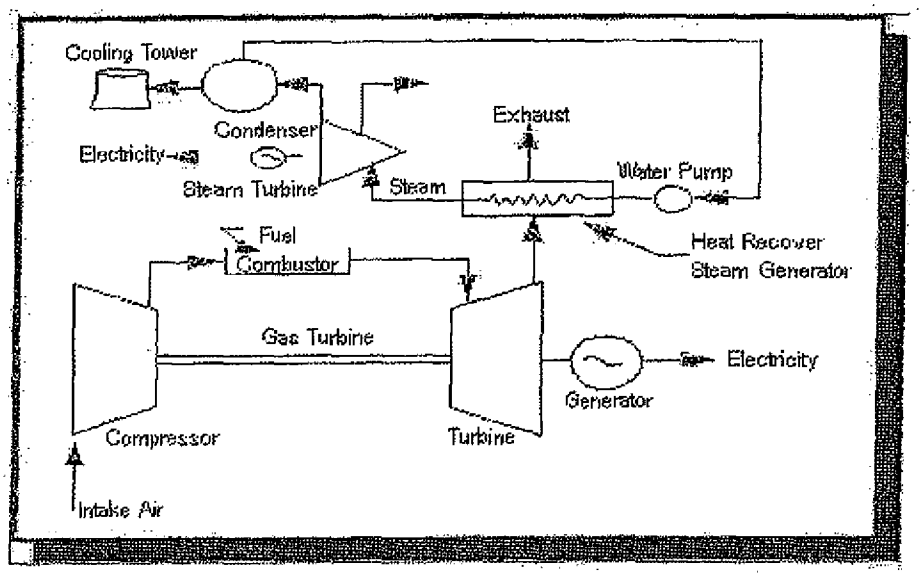

FIGURE 1 - Standard Combined-Cycle Configuration (1)

As an example, consider a gas turbine cycle that has an efficiency of 40%, which is a representative value for current Brayton Cycle gas turbines, and the Rankine Cycle has an efficiency of 30%. The combined-cycle efficiency would be 58%, which is a very large increase over either of the two simple cycles. Some representative efficiencies and power outputs for different cycles are shown in Figure 2 – Comparison of Efficiency and Power Output of Various Power Products, below.

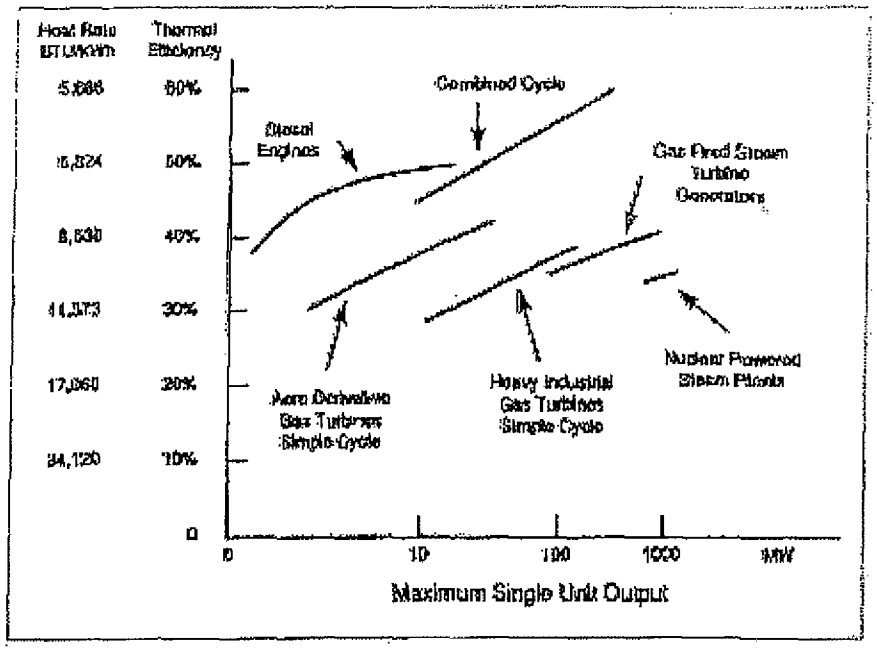

FIGURE 2 - Comparison of efficiency and power output of various power products [Bartol (1997)] (2)

<u>Current Regulatory Authority for Output-Based Emissions</u>

Innovative power technologies such as combined-cycle technology offer enormous potential to improve efficiency and enhance the environmental footprint of power generation through the reduction and/or prevention of air emissions to the environment. Currently, two thirds of the fuel burned to generate electricity in traditional fossil-fired steam boilers is lost. Traditional U.S. power generation facility efficiencies have not increased since the 1950s and more than one fifth of the U.S. power plants are more than 50 years old.(6) In addition, these facilities are the leading contributors to U.S. emissions of carbon dioxide, NOx, sulfur dioxide ("SO2"), and other contaminants into the air and water.

The ability to recognize and regulate the efficiency benefits of pollution reduction and/or prevention through the use of combined-cycle technology is achieved through the use of Output-Based emissions standards, incorporated since September 1998 within the U.S. EPA's new source performance standards ("NSPS") for NOx, from both new utility boilers and new industrial boilers. Pursuant to section 407(c) of the Clean Air Act in subpart Da (Electric Utility Steam Generating Units) and subpart Db (Industrial-Commercial-Institutional Steam Generating Units) of 40 CFR part 60, the U.S. EPA revised the NOx emissions limits for steam generating units for which construction, modification, or reconstruction commenced after July 9, 1997 (3). Output-Based regulations are also exemplified by those used in the U.S. EPA's NOx Cap and Trade Program for the NOx State Implementation Plan

("SIP") Call of 1998, which uses units of measure such as lb/MWh generated or lb concentration ("ppm"), which relate to the emissions to the productive output – electrical generation of the process.(4)

The use of innovative technologies such as combined-cycle units reduces fossil fuel use and leads to multi-media reductions in the environmental impacts of the production, processing transportation, and combustion of fossil fuels. In addition, reducing fossil fuel combustion is a pollution prevention measure that reduces emissions of all products of combustion, not just the target pollutant (currently NOx) of a federal regulatory program.

Authority to Expand Pollution Control Equipment & Categories in Texas

Under Texas House Bill 3732 ("HB3732") enacted in 2007, Section 11.31 of the Texas Tax Code is amended to add certain plant equipment and systems to the current list of air, water, or land pollution control devices exempt from property taxation in Texas.

Specifically, the language reads as follows:

> *SECTION 4. Section 11.31, Tax Code, is amended by adding Subsections (k), (l), and (m) to read as follows:*
> *(k) The Texas Commission on Environmental Quality shall adopt rules establishing a nonexclusive list of facilities, devices, or methods for the control of air, water, or land pollution, which must include:*
> *(1) coal cleaning or refining facilities;*
> *(2) atmospheric or pressurized and bubbling or circulating fluidized bed combustion systems and gasification fluidized bed combustion combined-cycle systems;*
> *(3) ultra-supercritical pulverized coal boilers;*
> *(4) flue gas recirculation components;*
> *(5) syngas purification systems and gas-cleanup units;*
> *(6) enhanced heat recovery systems;*
> *(7) exhaust heat recovery boilers;*
> *(8) heat recovery steam generators;*
> *(9) superheaters and evaporators;*
> *(10) enhanced steam turbine systems;*
> *(11) methanation;*
> *(12) coal combustion or gasification byproduct and coproduct handling, storage, or treatment facilities;*
> *(13) biomass cofiring storage, distribution, and firing systems;*
> *(14) coal cleaning or drying processes, such as coal drying/moisture reduction, air jigging, precombustion decarbonization, and coal flow balancing technology;*
> *(15) oxy-fuel combustion technology, amine or chilled ammonia scrubbing, fuel or emission conversion through the use of catalysts, enhanced scrubbing technology, modified combustion technology such as chemical looping, and cryogenic technology;*
> *(16) if the United States Environmental Protection Agency adopts a final rule or regulation regulating carbon dioxide as a pollutant, property that is used, constructed, acquired, or installed wholly or partly to capture carbon dioxide from an anthropogenic source in this state that is geologically sequestered in this state;*
> *(17) fuel cells generating electricity using hydrogen derived from coal, biomass, petroleum coke, or solid waste; and*
> *(18) any other equipment designed to prevent, capture, abate, or monitor nitrogen oxides, volatile organic compounds, particulate matter, mercury, carbon monoxide, or any criteria pollutant.*
> *(l) The Texas Commission on Environmental Quality by rule shall update the list adopted under Subsection (k) at least once every three years. An item may be removed from the list if the commission finds compelling evidence to support the conclusion that the item does not provide pollution control benefits.*
> *(m) Notwithstanding the other provisions of this section, if the facility, device, or method for the*

control of air, water, or land pollution described in an application for an exemption under this section is a facility, device, or method included on the list adopted under Subsection (k), the executive director of the Texas Commission on Environmental Quality, not later than the 30th day after the date of receipt of the information required by Subsections (c)(2) and (3) and without regard to whether the information required by Subsection (c)(1) has been submitted, shall determine that the facility, device, or method described in the application is used wholly or partly as a facility, device, or method for the control of air, water, or land pollution and shall take the actions that are required by Subsection (d) in the event such a determination is made.

Under the TCEQ's recently updated "Tax Relief for Pollution Control Property – Application Instructions and Equipment and Categories List -- Effective January 2008", the Equipment and Categories List - Part B ("ECL Part B") is a list of the pollution control property categories adopted and set forth in TTC Sec. 26.045(f). The taxpayer is to supply a pollution control percentage for the equipment listed in Part B via calculations demonstrating pollution control, prevention and/or reductions achieved by the listed equipment or systems.

The following property descriptions outline the environmental purpose, including the anticipated environmental benefit of pollution control additions considered under the Application Instructions' ECL Part B that have been constructed and placed into use at the Facility as of its placed-in-service date, or installed subsequent to in-service since 1994:

Property Descriptions

Item #1 Combined-Cycle Gas Turbine Plant Heat Recovery Steam Generator ("HRSG") and Support Systems Tier IV B-8

40 CFR Part 60 Subparts DA and DB, NOx Limits for Electric Utility Steam Generating Units and Industrial-Commercial-Institutional Steam Generating Units for New Source Performance Standards ("NSPS").

TAC Rule 106.512, Standard Permit for Electric Generating Units (EGU)

NOTE: Permits issued under Texas Clean Air Act's Health & Safety Code Sections 382.011, applies to all electric generating units that emit air contaminants, regardless of size, and it is to reflect Best Available Control Technology ("BACT") for electric generating units on an output basis in pounds of NOx per megawatt hour, adjusted to reflect a simple cycle power plant.

The heat recovery steam generator ("HRSG") found in the Facility is a heat exchanger that recovers heat from a hot gas stream. It produces steam that can be used in a process or used to drive a steam turbine. A common application for an HRSG is in a combined-cycle power station, where hot exhaust from a gas turbine is fed to an HRSG to generate steam which in turn drives a steam turbine. This combination produces electricity in a more thermally efficient manner than either the gas turbine or steam turbine alone.

The Facility's HRSGs consist of three major components: the Evaporator, Superheater, and Economizer. The different components are put together to meet the operating requirements of the unit. Modular HRSGs normally consist of three sections: an LP (low pressure) section, a reheat/IP (intermediate pressure) section, and an HP (high pressure) section. The reheat and IP sections are separate circuits inside the HRSG. The IP steam partly feeds the reheat section. Each section has a steam drum and an evaporator section where water is converted to steam. This steam then passes through superheaters to raise the temperature and pressure past the saturation point.

Item #2 Steam Turbine and Support Systems Tier IV B-10

40 CFR Part 60 Subparts DA and DB, NOx Limits for Electric Utility Steam Generating Units and Industrial-Commercial-Institutional Steam Generating Units for New Source Performance Standards ("NSPS").

TAC Rule 106.512, Standard Permit for Electric Generating Units (EGU)

NOTE: Permits issued under Texas Clean Air Act's Health & Safety Code Sections 382.011, applies to all electric generating units that emit air contaminants, regardless of size, and it is to reflect Best Available Control Technology ("BACT") for electric generating units on an output basis in pounds of NOx per megawatt hour, adjusted to reflect a simple cycle power plant.

The steam turbine(s) found in the Facility operate on the Rankine cycle in combination with the Brayton cycle, as described above. Steam created in the Facility HRSG(s) from waste heat that would have otherwise been lost to the atmosphere enters the steam turbine via a throttle valve, where it powers the turbine

and connected generator to make electricity. Use of HRSG/Steam Turbine System combination provides the Facility with an overall efficiency of greater than 50%. Steam turbine systems similar to the Facility's have a history of achieving up to 95% availability on an annual basis and can operate for more than a year between shutdown for maintenance and inspections. (5)

Pollution Control Percentage Calculation: Avoided Emissions Approach

To calculate the percentage of the equipment or category deemed to be pollution control equipment, the Avoided Emissions approach has been used. This approach relies on thermal output differences between a conventional power generation system and the combined-cycle system at the Facility. Specifically, the percentage is determined by calculating the displacement of emissions associated with the Facility's thermal output and subtracting these emissions from a baseline emission rate. These displaced emissions are emissions that would have been generated by the same thermal output from a conventional system.

Greater energy efficiency reduces all air contaminant emissions, including the greenhouse gas, carbon dioxide. Higher efficiency processes include combined-cycle operation and combined heat and power ("CHP") generation. For electric generation the energy efficiency of the process expressed in terms of millions of British thermal units ("MMBTU's") per Megawatt-hour. Lower fuel consumption associated with increased fuel conversion efficiency reduces emissions across the board – that is NOx, SOx, particulate matter, hazardous air pollutants, and greenhouse gas emissions such as CO2.

In calculating the percent exempt for the listed items from the ECL-Part B, we utilized Output-Based NOx allocation method for both power generation projects that replaced existing facilities and "Greenfield" power and heat generation facilities. We looked at the various fossil fuel technologies in use today and chose the baseline facility to be a natural gas fuel-fired steam generator. We benchmarked this conventional generation to the subject natural gas-fired combined cycle generator at the Facility. By doing so, we narrowed the heat rate factors as much as possible to be conservative and uniform in modeling. The benchmark heat rate factor is the following:

Natural Gas fuel-fired Steam Generator: 10,490 BTU's/kWh

This baseline heat rate purposely omits other fossil fuel sources in order to eliminate impurity type characteristics, which in turn eliminated the NOx emission and cost of control differences of each fossil fuel and generator type. Comparing the emissions impact of different energy generation facilities is concise when emissions are measured per unit of useful energy output. For the purpose of our calculations, we converted all the energy output to units of MWh (1 MWh = 3.413 MMBTU), and compared the total emission rate to the baseline facility.

The comparison steps to calculate the NOx reduction is as follows:

Calculation (Reference Schedule A)

Step 1 – Subject Output-Based Limit Calculation (lbs NOx / MWh)

(Input-based Limit (lbs NOx/MMBTU)) X (Heat Rate (Btu/kWh)) / (1,000,000 Btu / 1,000 kWh) = Output: (lbs NOx/MWh),

Step 2 – Subject Output Conversion Calculation (NOx Tons / Year)

(Output (lbs NOx/MWh) X (Unit Design Capacity (MW)) X (Capacity Factor) X ((365 Days) X (24 hrs/day)) / 2,000 lbs = Output: (NOx Tons/Year)

Step 3 – Baseline Output-Based Limit Calculation (lbs NOx / MWh)

(Input-based Limit (lbs NOx/MWh)) X (Heat Rate (Btu/kWh)) / (1,000,000 Btu / 1,000 kWh) = Output: (lbs NOx/MWh)

Step 4 – Baseline Output Conversion Calculation (NOx Tons / Year)

(Output (lbs NOx/MMBtu) X (Unit Design Capacity (MW)) X (Capacity Factor) X ((365 Days) X (24 hrs/day)) / 2,000 lbs = Output: (NOx Tons/Year)

Step 5 – Percent NOx Reduction Calculation

((Output Baseline)$_{step\ 4}$ - (Output Subject))$_{step\ 2}$ / (Output Subject)$_{step\ 2}$ = % Reduction Output Subject

Step 6 – Percent Exempt Calculation

(Total Subject Facility Cost) X (% NOx Reduction) = Capital Cost of NOx Avoidance

Step 7 – Percent Exempt Calculation

Total Cost of NOx Avoidance / Total Cost of HB 3732 Equipment = % Exempt

- If % Exempt is greater than 100% HB 3732 Equipment is 100% Exempt
- If % Exempt is less than 100% then HB 3732 Equipment is partially exempt at the Step 6 calculation.

NOTE: See the attached calculation sheet for the details regarding Facility-specific calculations and property tax exemption percentage results based upon these calculations.

REFERENCES

1. "Output-Based Regulations: A Handbook for Air Regulators", U.S. Environmental Protection Agency, Office of Atmospheric Programs – Climate Protection Partnerships Division, August, 2004, p.4.

2. "Output-Based Emissions Standards; Advancing Innovative Energy Technologies", Northeast-Midwest Institute; 2003, p. 9.

3. IBID, p.13.

4. "Output-Based Regulations: A Handbook for Air Regulators", U.S. Environmental Protection Agency, Office of Atmospheric Programs – Climate Protection Partnerships Division, August, 2004, p.4.

5. http://www.cogeneration.net/Combined_Cycle_Power_Plants.htm

6. "Output-Based Emissions Standards; Advancing Innovative Energy Technologies", Northeast-Midwest Institute; 2003, p. 9.

9. PARTIAL PERCENTAGE CALCULATION

N/A.

10. PROPERTY CATEGORIES AND COSTS

See attached Schedule 10.

11. EMISSION REDUCTION INCENTIVE GRANT

Will an application for an Emission Reduction Incentive Grant be on file for this property/project:

[ ] Yes [X] No

12. APPLICATION DEFICIENCIES

After an initial review of the application, the TCEQ may determine that the information provided with the application is not sufficient to make a use determination. The TCEQ may send a notice of deficiency, requesting additional information that must be provided within 30 days of written notice.

13. FORMAL REQUEST FOR SIGNATURE

By signing this application, you certify that this information is true to the best of your knowledge and belief.

NAME: _____ DATE: 25 MARCH 2008

TITLE: Director

COMPANY: Duff & Phelps LLC

Under Texas Penal Code, Section 37.10, if you make a false statement on this application, you could receive a jail term of up to one year and a fine up to $2,000, or a prison term of two to 10 years and a fine of up to $5,000.

14. DELINQUENT FEE/PENALTY PROTOCOL

This form will not be processed until all delinquent fees and/or penalties owed to the TCEQ or the Office of the Attorney General on behalf of the TCEQ are paid in accordance with the Delinquent Fee and Penalty Protocol. (Effective 9/1/2006)

Buddy Garcia, *Chairman*
Larry R. Soward, *Commissioner*
Bryan W. Shaw, Ph.D., *Commissioner*
Glenn Shankle, *Executive Director*

TEXAS COMMISSION ON ENVIRONMENTAL QUALITY

Protecting Texas by Reducing and Preventing Pollution

May 1, 2008

CHIEF APPRAISER
BRAZORIA COUNTY APPRAISAL DISTRICT
500 N CHENANGO ST
ANGLETON, TX 77515

This letter is to inform you that on 5/1/2008, a final determination was issued with regard to Use Determination application 07-11994, filed by:

FREEPORT ENERGY CENTER LP
FREEPORT ENERGY CENTER LP
2301 N BRAZOSPORT BLVD
FREEPORT, TX 77451

A copy of the use determination is included with this letter. House Bill 3121, enacted during the 77th Legislature Session, established a process for appealing a use determination. The Texas Commission on Environmental Quality (TCEQ) rules that implement the appeals process are at 30 TAC 17.25. Pursuant to 17.25(a)(1), an appeal must be filed within 20 days of receipt of the use determination. Should you choose to appeal the use determination, please submit a copy of your appeal to the TCEQ Tax Relief for Pollution Control Property program at the time of filing the appeal with the Chief Clerk of the commission.

In order to qualify for a tax exemption, the applicant must file an exemption request with your appraisal district. This exemption request must be accompanied by a copy of the positive use determination issued by the TCEQ. If you have any questions regarding this Use Determination or the appeals process, please call me at 512/239-3100.

Sincerely,

David Greer
Team Leader, Pollution Prevention

Buddy Garcia, *Chairman*
Larry R. Soward, *Commissioner*
Bryan W. Shaw, Ph.D., *Commissioner*
Glenn Shankle, *Executive Director*

TEXAS COMMISSION ON ENVIRONMENTAL QUALITY

Protecting Texas by Reducing and Preventing Pollution

May 1, 2008

CALPINE/DOW
JUSTIN HYLAND/LEO SCHERRER
717 TEXAS AVE
HOUSTON, TX 77002

This letter is to inform you that on 5/1/2008, the technical review of Use Determination Application 07-11994 was completed. This application is for:

FREEPORT ENERGY CENTER LP
FREEPORT ENERGY CENTER LP
2301 N BRAZOSPORT BLVD
FREEPORT, TX 77451

The use determination is included with this letter. In order to request an exemption, a copy of this Use Determination, along with a completed exemption request form #50-248 (can be found at www.cpa.state.tx.us), must be provided to the Chief Appraiser of the appropriate appraisal district. This request must be made by April 30.

House Bill 3121, enacted during the 77th Legislative Session, established a process for appealing a use determination. The Texas Commission on Environmental Quality (TCEQ) rules that implement the appeals process are at 30 TAC 17.25. Pursuant to 17.25(a)(1), an appeal must be filed within 20 days of receipt of the use determination. Should you choose to appeal the use determination, please submit a copy of your appeal to the TCEQ Tax Relief for Pollution Control Property program at the time of filing the appeal with the Chief Clerk of the commission.

If you have any questions or require any additional information, please contact the Tax Relief for Pollution Control Property Program at (512) 239-3100.

Sincerely,

David Greer
Team Leader, Pollution Prevention

Buddy Garcia, *Chairman*
Larry R. Soward, *Commissioner*
Bryan W. Shaw, Ph.D., *Commissioner*
Glenn Shankle, *Executive Director*

TEXAS COMMISSION ON ENVIRONMENTAL QUALITY

Protecting Texas by Reducing and Preventing Pollution

USE DETERMINATION

The Texas Commission on Environmental Quality has reviewed Use Determination Application, 07-11994, filed by:

FREEPORT ENERGY CENTER LP
FREEPORT ENERGY CENTER LP
2301 N BRAZOSPORT BLVD
FREEPORT TX 77451

The pollution control property/project listed in the Use Determination Application is:

This facility has thermally efficient heat recovery steam generators (HRSGs) and steam turbines. This application is a Tier IV application seeking a partial use determination for the HRSGs and the enhanced steam turbines.

The outcome of the review is:

A 100% positive use determination for the Heat Recovery Steam Generators. This equipment is considered to be pollution control equipment and was installed to meet or exceed federal or state regulations.

A negative determination is issued for the steam turbines. The use of the steam turbines does not provide an environmental benefit at the site. The steam turbines are not considered to be pollution control equipment.

Executive Director

May 1 2008
Date

TAX RELIEF FOR POLLUTION CONTROL PROPERTY: TECHNICAL REVIEW DOCUMENT

Reviewed By: RLH App. No.: 07 - 11994 Review Start Date: 4/8/2008

Company Name: FREEPORT ENERGY CENTER LP
Facility Name: FREEPORT ENERGY CENTER LP
County: BRAZORIA Outstanding Fees: N
Batch/Voucher Number:B500289

ADMINISTRATIVE REVIEW

Administrative Complete Date:4/8/2008

TIER LEVEL
What Tier is this application? The application was filed as a Tier IV application. Is this the appropriate level?

The property listed on this application, Heat Recovery Steam Generators and a steam turbine are items B8 and B10 on the Equipment and Categories List. This application was filed as a Tier IV. Tier IV is the appropriate level for this application.

RELEVANT RULE, REGULATION, OR STATUTORY PROVISION
The rule listed in the application is: 40 CFR 60.44Da
The appropriate rule is: 40 CFR 60.44Da

Explain why this is the appropriate rule?

40 CFR 60.Subpart DA: Standards of Performance for New Stationary Sources. Standards of performance for Electric Utility Steam Generating Units for Which Construction is Commenced after September 18, 1978. This is an appropriate rule.

BRIEF DESCRIPTION OF PROPERTY
The property is described as:

This facility has thermally efficient heat recovery steam generators (HRSGs) and steam turbines. This application is a Tier IV application seeking a partial use determination for the HRSGs and the enhanced steam turbines.

Is an adequate description and purpose of the property provided? Does it list the anticipated environmental benefits? Are sketches and flow diagrams provided if needed?

An adequate description of the property was provided, and the purpose of the property was listed. The anticipated environmental benefit is listed. Sketches and flow diagrams were provided.

DECISION FLOWCHART(30 TAC 17.15(a))
Mark the appropriate boxes: Box 3 Box 5 Box 6(IV) Y Box 10(III) Box 12(I) Box 13(II)
PART B DECISION FLOWCHART (17.15(b))
Mark the appropriate boxes: Box 1Y Box 2 Y Box 3 Y

Describe how the property flowed through the Decision Flowchart:

Since the property is listed on Part B of the Equipment & Categories List this property leaves the Decision Flow Chart at Box 6. It passes through Box 1 of the Part B Decision Flow Chart with a yes answer. The use of this property at a combined cycle plant, as opposed to having a simple

cycle plant, provides an environmental benefit of reduced NOx emissions at the site. So there is a Yes answer for Box 2, Since there is a reduction in NOx emissions there is an environmental rule which is being met so there is a yes answer to Box 3. The steam turbine passes through Box 1 on the Part B Decision Flow Chart with a yes answer. Since the use of the steam turbine does not provide an environmental benefit at the site a no answer is the result of Box 2. The steam turbine is not eligible for a positive determination.

TIER III or IV APPLICATIONS

Does your calculation agree with the applicants?

No. The application contains a proposed formula for calculating the pollution control value of the HRSGs and the steam turbine. The formula is outcome determinative, and its focus is not on the pollution control aspect of the property. The Executive Director disagrees with this formula.

PROPERTY CATEGORIES AND COSTS

Is the table completed correctly? Has the applicant certified that all listed property became taxable for the first time after January 1, 1994? Is all information necessary for conducting the technical review included.

The table was completed correctly. The applicant certified that all listed property became taxable for the first time after January 1, 1994. All the information necessary for conducting the technical review was included on the application.

TECHNICAL DEFICIENCIES

Is the application complete as received: Y If the application was not administratively complete explain below when justifying the final decision in the final determination section. If the application was not technically complete then:

Provide the language to be used in the Notice of Deficiency (NOD) letter:

Summarize the NOD response:

Provide the language used in the second NOD letter:

Summarize the second NOD response:

Provide the language used in the thied NOD letter:

Summarize the third NOD response:

FINAL DETERMINATION

If the property description has been summarized enter the detailed property description:

This facility has thermally efficient heat recovery steam generators (HRSGs) and steam turbines.

This application is a Tier IV application seeking a partial use determination for the HRSGs and the enhanced steam turbines.

Provide the reason for your final determination:

The Heat Recovery Steam Generators meet all of the requirements of Chapter 17. A positive use determination based on the most appropriate formula should be issued for the Heat Recovery Steam Generators. The most appropriate formula has been determined by the Executive Director. A negative determination should be issued for the steam turbine. The use of the steam turbine does not result in there being an environmental benefit at the site.

Provide the language for the final determination.

A positive use determination of 100% for the Heat Recovery Steam Generators. A negative determination is issued for the steam turbine. The use of the steam turbine does not provide an environmental benefit at the site. The steam turbine is not considered to be pollution control equipment.

Highlight the required signatures and establish the appropriate due dates.

Reviewed: **Date Signed:** 5/1/08

Peer Reviewed: **Date Signed:** 5-1-08

Team Leader: **Date Signed:** 5/1/08

Section Manager: **Date Signed:** MAY 1 2008

Division Director: **Date Signed:** MAY 1 2008

Executive Director's Exhibit 6

Navasota: Application and Use Determination Documents

TEXAS COMMISSION ON ENVIRONMENTAL QUALITY

2008 MAY 23 AM 8:43

CHIEF CLERKS OFFICE

TEXAS COMMISSION ON ENVIRONMENTAL QUALITY
APPLICATION FOR USE DETERMINATION
FOR POLLUTION CONTROL PROPERTY

The TCEQ has the responsibility to determine whether a property is a pollution control property. A person seeking a use determination for pollution control property must complete the attached application or use a copy or similar reproduction. For assistance in completing this form refer to the TCEQ guidelines document, *Property Tax Exemptions for Pollution Control Property*, as well as 30 TAC §17, rules governing this program. For additional assistance please contact the Tax Relief for Pollution Control Property Program at (512) 239-3100. The application should be completed and mailed, along with a complete copy and appropriate fee, to: TCEQ MC-214, Cashiers Office, P.O. Box 13088, Austin, Texas 78711-3088.

1. GENERAL INFORMATION

A. What is the type of ownership of this facility?

- ☐ Corporation
- ☐ Partnership
- ☑ Limited Partnership
- ☐ Sole Proprietor
- ☐ Utility
- ☐ Other

B. Size of company: Number of Employees

- ☑ 1 to 99
- ☐ 100 to 499
- ☐ 500 to 999
- ☐ 1,000 to 1,999
- ☐ 2,000 to 4,999
- ☐ 5,000 or more

C. Business Description: **Electricity Manufacturing (SIC 4911)**

2. TYPE OF APPLICATION

- ☐ **Tier I $150 Application Fee**
- ☐ **Tier II $1,000 Application Fee**
- ☐ **Tier III $2,500 Application Fee**
- ☑ **Tier IV $500 Application Fee**

NOTE: Enclose a check, money order to the TCEQ, or a copy of the ePay receipt along with the applicaton to cover the required fee.

3. NAME OF APPLICANT

A. Company Name: Navasota Wharton Energy Partners LP

B. Mailing Address (Street or P.O. Box): 403 Corporate Woods

C. City, State, ZIP: Magnolia, TX 77354

4. PHYSICAL LOCATION OF PROPERTY REQUESTING A TAX EXEMPTION

A. Name of facility: Colorado Bend

B. Type of Mfg Process or Service: Electricity Manufacturing (SIC 4911)

C. Street Address: 3821 S. State Hwy 60

D. City, State, ZIP: Wharton, TX 77488

E. Tracking Number Assigned by Applicant: DPCOBend B

F. Customer Number or Regulated Entity Number: N/A

5. APPRAISAL DISTRICT WITH TAXING AUTHORITY OVER PROPERTY

A. Name of Appraisal District: Wharton

B. Appraisal District Account Number: 10258-000-000-00; 10-20500000-0200-67099; 20063-000-055-00

Replacement
~~A7-12209~~

6. CONTACT NAME (must be provided)

A. Company/Organization Name:	Duff and Phelps LLC	
B. Name of Individual to Contact:	Greg Maxim	
C. Mailing Address:	919 Congress Ave.	Suite 1450
D. City, State, ZIP:	Austin, TX 78701	
E. Telephone number and fax number:	(512) 671-5580	Fax (512) 671-5501
F. E-Mail address (if available):	gregory.maxim@duffandphelps.com	

7. RELEVANT RULE, REGULATION, OR STATUTORY PROVISION

Please reference Section 8. Each item is detailed with the proper statute, regulation, or environmental regulatory provision.

8. DESCRIPTION OF PROPERTY

Background

The Colorado Bend Energy Center (the "Facility"), owned by Navasota Wharton Energy Partners LP, is a combined cycle natural-gas fired power plant located in Wharton, Wharton County, Texas. The Facility is intended to have a total capacity of 825 Mw, built in three phases. Phase has a capacity of 275 Mw and was completed in June of 2007. Phase 2, currently under construction, is to be completed in June of 2008 and will also have a 275 Mw capacity. Each phase consists of 2 GE 7-EA combustion turbine units utilizing the GE Dry Low NOx combustion control system technology, 2 heat recovery steam generating (HRSG) units, and one steam turbine unit. The Facility utilizes a cooling tower within the circulating water system for condenser cooling water needs and condensate return purposes.

Overview of Combined Cycle Technology

The Facility consists of a combined-cycle gas turbine power plant with gas Combustion Turbines ("CTs") equipped with heat recovery steam generators to capture heat from the gas turbine exhaust. Steam produced in the heat recovery steam generators powers a steam turbine generator(s) to produce additional electric power. Use of the otherwise wasted heat in the turbine exhaust gas results in higher plant thermal efficiency compared to other combustion technologies. Combined-cycle plants currently entering service can convert approximately 50% of the chemical energy of natural gas into electricity (HHV basis).

The Rankine cycle is a thermodynamic cycle that converts heat from an external source into work. In a Rankine cycle, external heat from an outside source is provided to a fluid in a closed-loop system. This fluid, once pressurized, converts the heat into work output using a turbine. The fluid most often used in a Rankine cycle is water (steam) due to its favorable properties, such as nontoxic and unreactive chemistry, abundance, and low cost, as well as its thermodynamic properties. The thermal efficiency of a Rankine cycle is usually limited by the working fluid. Without pressure reaching super critical the temperature range the

Rankine cycle can operate over is quite small, turbine entry temperatures are typically 565°C (the creep limit of stainless steel) and condenser temperatures are around 30°C. This gives a theoretical Carnot efficiency of around 63% compared with an actual efficiency of 42% for a modern coal-fired power station. This low turbine entry temperature (compared with a gas turbine) is why the Rankine cycle is often used as a bottoming cycle in combined cycle gas turbine power stations.

The Brayton cycle is a constant pressure thermodynamic cycle that converts heat from combustion into work. A Brayton engine, as it applies to a gas turbine system, will consist of a fuel or gas compressor, combustion chamber, and an expansion turbine. Air is drawn into the compressor, mixed with the fuel, and ignited. The resulting work output is captured through a pump, cylinder, or turbine. A Brayton engine forms half of a combined cycle system, which combines with a Rankine engine to further increase overall efficiency. Cogeneration systems typically make use of the waste heat from Brayton engines, typically for hot water production or space heating.

By combining both gas and steam cycles, high input temperatures and low output temperatures can be achieved. The efficiency of the cycles are additive, because they are powered by the same fuel source. A combined-cycle plant has a thermodynamic cycle that operates between the gas turbine's high firing temperature and the waste heat temperature from the condensers of the steam cycle. This large range means that the Carnot efficiency of the cycle is high. The actual efficiency, while lower than this is still higher than that of either plant on its own. The thermal efficiency of a combined-cycle power plant is the net power output of the plant divided by the heating value of the fuel. If the plant produces only electricity, efficiencies of up to 59% can be achieved.

A single-train combined-cycle plant consists of one gas turbine generator, a heat recovery steam generator (HSRG) and a steam turbine generator ("1 x 1" configuration). As an example, an "FA-class" combustion turbine, the most common technology in use for large combined-cycle plants within the state of Texas and other locations throughout the United States, represents a plant with approximately 270 megawatts of capacity.

See Figure 1 – Standard Combined-Cycle Configuration, below.

It is common to find combined-cycle plants using two or even three gas turbine generators and heat recovery steam generators feeding a single, proportionally larger steam turbine generator. Larger plant sizes result in economies of scale for construction and operation, and designs using multiple combustion turbines provide improved part-load efficiency. A 2 x 1 configuration using FA-class technology will produce about 540 megawatts of capacity at International Organization for Standardization ("ISO") conditions. ISO references ambient conditions at 14.7 psia, 59 F, and 60% relative humidity.

Because of high thermal efficiency, high reliability, and low air emissions,

combined-cycle gas turbines have been the new resource of choice for bulk power generation for well over a decade. Other attractive features include significant operational flexibility, the availability of relatively inexpensive power augmentation for peak period operation and relatively low carbon dioxide production.

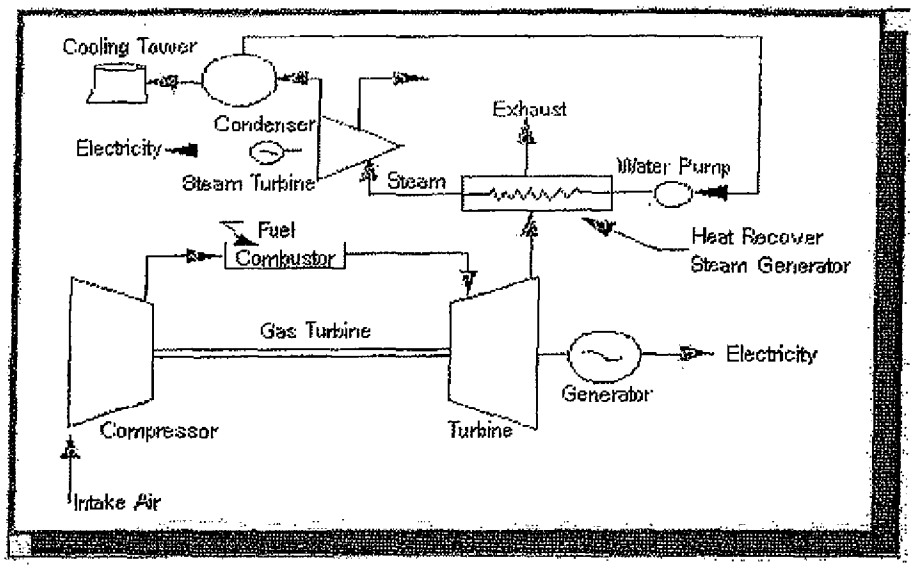

FIGURE 1 - Standard Combined-Cycle Configuration (1)

As an example, consider a gas turbine cycle that has an efficiency of 40%, which is a representative value for current Brayton Cycle gas turbines, and the Rankine Cycle has an efficiency of 30%. The combined-cycle efficiency would be 58%, which is a very large increase over either of the two simple cycles. Some representative efficiencies and power outputs for different cycles are shown in Figure 2 – Comparison of Efficiency and Power Output of Various Power Products, below.

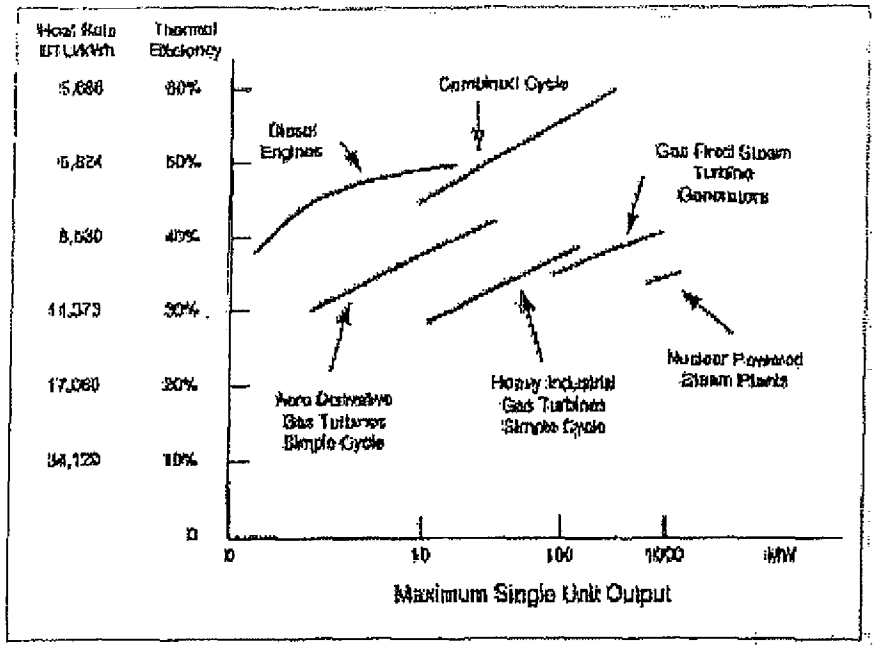

FIGURE 2 - Comparison of efficiency and power output of various power products [Bartol (1997)] (2)

Current Regulatory Authority for Output-Based Emissions

Innovative power technologies such as combined-cycle technology offer enormous potential to improve efficiency and enhance the environmental footprint of power generation through the reduction and/or prevention of air emissions to the environment. Currently, two thirds of the fuel burned to generate electricity in traditional fossil-fired steam boilers is lost. Traditional U.S. power generation facility efficiencies have not increased since the 1950s and more than one fifth of the U.S. power plants are more than 50 years old. In addition, these facilities are the leading contributors to U.S. emissions of carbon dioxide, NOx, sulfur dioxide ("SO2"), and other contaminants into the air and water.

The ability to recognize and regulate the efficiency benefits of pollution reduction and/or prevention through the use of combined-cycle technology is achieved through the use of Output-Based emissions standards, incorporated since September 1998 within the U.S. EPA's new source performance standards ("NSPS") for NOx, from both new utility boilers and new industrial boilers. Pursuant to section 407(c) of the Clean Air Act in subpart Da (Electric Utility Steam Generating Units) and subpart Db (Industrial-Commercial-Institutional Steam Generating Units) of 40 CFR part 60, the U.S. EPA revised the NOx emissions limits for steam generating units for which construction, modification, or reconstruction commenced after July 9, 1997 (3). Output-Based regulations are also exemplified by those used in the U.S. EPA's NOx Cap and Trade Program for the NOx State Implementation Plan ("SIP") Call

of 1998, which uses units of measure such as lb/MWh generated or lb concentration ("ppm"), which relate to the emissions to the productive output – electrical generation of the process.(4)

The use of innovative technologies such as combined-cycle units reduces fossil fuel use and leads to multi-media reductions in the environmental impacts of the production, processing transportation, and combustion of fossil fuels. In addition, reducing fossil fuel combustion is a pollution prevention measure that reduces emissions of all products of combustion, not just the target pollutant (currently NOx) of a federal regulatory program.

Authority to Expand Pollution Control Equipment & Categories in Texas

Under Texas House Bill 3732 ("HB3732") enacted in 2007, Section 11.31 of the Texas Tax Code is amended to add certain plant equipment and systems to the current list of air, water, or land pollution control devices exempt from property taxation in Texas.

Specifically, the language reads as follows:

> *SECTION 4. Section 11.31, Tax Code, is amended by adding Subsections (k), (l), and (m) to read as follows:*
> *(k) The Texas Commission on Environmental Quality shall adopt rules establishing a nonexclusive list of facilities, devices, or methods for the control of air, water, or land pollution, which must include:*
> *(1) coal cleaning or refining facilities;*
> *(2) atmospheric or pressurized and bubbling or circulating fluidized bed combustion systems and gasification fluidized bed combustion combined-cycle systems;*
> *(3) ultra-supercritical pulverized coal boilers;*
> *(4) flue gas recirculation components;*
> *(5) syngas purification systems and gas-cleanup units;*
> *(6) enhanced heat recovery systems;*
> *(7) exhaust heat recovery boilers;*
> *(8) heat recovery steam generators;*
> *(9) superheaters and evaporators;*
> *(10) enhanced steam turbine systems;*
> *(11) methanation;*
> *(12) coal combustion or gasification byproduct and coproduct handling, storage, or treatment facilities;*
> *(13) biomass cofiring storage, distribution, and firing systems;*
> *(14) coal cleaning or drying processes, such as coal drying/moisture reduction, air jigging, precombustion decarbonization, and coal flow balancing technology;*
> *(15) oxy-fuel combustion technology, amine or chilled ammonia scrubbing, fuel or emission conversion through the use of catalysts, enhanced scrubbing technology, modified combustion technology such as chemical looping, and cryogenic technology;*
> *(16) if the United States Environmental Protection Agency adopts a final rule or regulation regulating carbon dioxide as a pollutant, property that is used, constructed, acquired, or installed wholly or partly to capture carbon dioxide from an anthropogenic source in this state that is geologically sequestered in this state;*
> *(17) fuel cells generating electricity using hydrogen derived from coal, biomass, petroleum coke, or solid waste; and*
> *(18) any other equipment designed to prevent, capture, abate, or monitor nitrogen oxides, volatile organic compounds, particulate matter, mercury, carbon monoxide, or any criteria pollutant.*
> *(l) The Texas Commission on Environmental Quality by rule shall update the list adopted under Subsection (k) at least once every three years. An item may be removed from the list if the commission finds compelling evidence to support the conclusion that the item does not provide pollution control benefits.*
> *(m) Notwithstanding the other provisions of this section, if the facility, device, or method for the*

control of air, water, or land pollution described in an application for an exemption under this section is a facility, device, or method included on the list adopted under Subsection (k), the executive director of the Texas Commission on Environmental Quality, not later than the 30th day after the date of receipt of the information required by Subsections (c)(2) and (3) and without regard to whether the information required by Subsection (c)(1) has been submitted, shall determine that the facility, device, or method described in the application is used wholly or partly as a facility, device, or method for the control of air, water, or land pollution and shall take the actions that are required by Subsection (d) in the event such a determination is made.

Under the TCEQ's recently updated "Tax Relief for Pollution Control Property – Application Instructions and Equipment and Categories List – Effective January 2008", the Equipment and Categories List - Part B ("ECL Part B") is a list of the pollution control property categories adopted and set forth in TTC Sec. 26.045(f). The taxpayer is to supply a pollution control percentage for the equipment listed in Part B via calculations demonstrating pollution control, prevention and/or reductions achieved by the listed equipment or systems.

The following property descriptions outline the environmental purpose, including the anticipated environmental benefit of pollution control additions considered under the Application Instructions' ECL Part B that have been constructed and placed into use at the Facility as of its placed-in-service date, or installed subsequent to in-service since 1994:

Property Descriptions

Item #1 & 3 Combined-Cycle Gas Turbine Plant Heat Recovery Steam Generator ("HRSG") and Support Systems Tier IV B-8

40 CFR Part 60 Subparts DA and DB, NOx Limits for Electric Utility Steam Generating Units and Industrial-Commercial-Institutional Steam Generating Units for New Source Performance Standards ("NSPS").

TAC Rule 106.512, Standard Permit for Electric Generating Units (EGU)

NOTE: Permits issued under Texas Clean Air Act's Health & Safety Code Sections 382.011, applies to all electric generating units that emit air contaminants, regardless of size, and it is to reflect Best Available Control Technology ("BACT") for electric generating units on an output basis in pounds of NOx per megawatt hour, adjusted to reflect a simple cycle power plant.

The heat recovery steam generator ("HRSG") found in the Facility is a heat exchanger that recovers heat from a hot gas stream. It produces steam that can be used in a process or used to drive a steam turbine. A common application for an HRSG is in a combined-cycle power station, where hot exhaust from a gas turbine is fed to an HRSG to generate steam which in turn drives a steam turbine. This combination produces electricity in a more thermally efficient manner than either the gas turbine or steam turbine alone.

The Facility's HRSGs consist of three major components: the Evaporator, Superheater, and Economizer. The different components are put together to meet the operating requirements of the unit. Modular HRSGs normally consist of three sections: an LP (low pressure) section, a reheat/IP (intermediate pressure) section, and an HP (high pressure) section. The reheat and IP sections are separate circuits inside the HRSG. The IP steam partly feeds the reheat section. Each section has a steam drum and an evaporator section where water is converted to steam. This steam then passes through superheaters to raise the temperature and pressure past the saturation point.

Item #2 & 4 Steam Turbine and Support Systems Tier IV B-10

40 CFR Part 60 Subparts DA and DB, NOx Limits for Electric Utility Steam Generating Units and Industrial-Commercial-Institutional Steam Generating Units for New Source Performance Standards ("NSPS").

TAC Rule 106.512, Standard Permit for Electric Generating Units (EGU)

NOTE: Permits issued under Texas Clean Air Act's Health & Safety Code Sections 382.011, applies to all electric generating units that emit air contaminants, regardless of size, and it is to reflect Best Available Control Technology ("BACT") for electric generating units on an output basis in pounds of NOx per megawatt hour, adjusted to reflect a simple cycle power plant.

The steam turbine(s) found in the Facility operate on the Rankine cycle in combination with the Brayton cycle, as described above. Steam created in the Facility HRSG(s) from waste heat that would have otherwise been lost to the atmosphere enters the steam turbine via a throttle valve, where it powers the turbine

and connected generator to make electricity. Use of HRSG/Steam Turbine System combination provides the Facility with an overall efficiency of greater than 50%. Steam turbine systems similar to the Facility's have a history of achieving up to 95% availability on an annual basis and can operate for more than a year between shutdown for maintenance and inspections. (5)

Pollution Control Percentage Calculation: Avoided Emissions Approach

To calculate the percentage of the equipment or category deemed to be pollution control equipment, the Avoided Emissions approach has been used. This approach relies on thermal output differences between a conventional power generation system and the combined-cycle system at the Facility. Specifically, the percentage is determined by calculating the displacement of emissions associated with the Facility's thermal output and subtracting these emissions from a baseline emission rate. These displaced emissions are emissions that would have been generated by the same thermal output from a conventional system.

Greater energy efficiency reduces all air contaminant emissions, including the greenhouse gas, carbon dioxide. Higher efficiency processes include combined-cycle operation and combined heat and power ("CHP") generation. For electric generation the energy efficiency of the process expressed in terms of millions of British thermal units ("MMBTU's") per Megawatt-hour. Lower fuel consumption associated with increased fuel conversion efficiency reduces emissions across the board – that is NOx, SOx, particulate matter, hazardous air pollutants, and greenhouse gas emissions such as CO2.

In calculating the percent exempt for the listed items from the ECL-Part B, we utilized Output-Based NOx allocation method for both power generation projects that replaced existing facilities and "Greenfield" power and heat generation facilities. We looked at the various fossil fuel technologies in use today and chose the baseline facility to be a natural gas fuel-fired steam generator. We benchmarked this conventional generation to the subject natural gas-fired combined cycle generator at the Facility. By doing so, we narrowed the heat rate factors as much as possible to be conservative and uniform in modeling. The benchmark heat rate factor is the following:

Natural Gas fuel-fired Steam Generator: 10,490 BTU's/kWh

This baseline heat rate purposely omits other fossil fuel sources in order to eliminate impurity type characteristics, which in turn eliminated the NOx emission and cost of control differences of each fossil fuel and generator type. Comparing the emissions impact of different energy generation facilities is concise when emissions are measured per unit of useful energy output. For the purpose of our calculations, we converted all the energy output to units of MWh (1 MWh = 3.413 MMBTU), and compared the total emission rate to the baseline facility.

The comparison steps to calculate the NOx reduction is as follows:

Calculation (Reference Schedule A)

Step 1 – Subject Output-Based Limit Calculation (lbs NOx / MWh)

(Input-based Limit (lbs NOx/MMBTU)) X (Heat Rate (Btu/kWh)) / (1,000,000 Btu / 1,000 kWh) = Output: (lbs NOx/MWh).

Step 2 – Subject Output Conversion Calculation (NOx Tons / Year)

(Output (lbs NOx/MWh) X (Unit Design Capacity (MW)) X (Capacity Factor) X ((365 Days) X (24 hrs/day)) / 2,000 lbs = Output: (NOx Tons/Year)

Step 3 – Baseline Output-Based Limit Calculation (lbs NOx / MWh)

(Input-based Limit (lbs NOx/MWh)) X (Heat Rate (Btu/kWh)) / (1,000,000 Btu / 1,000 kWh) = Output: (lbs NOx/MWh)

Step 4 – Baseline Output Conversion Calculation (NOx Tons / Year)

(Output (lbs NOx/MMBtu) X (Unit Design Capacity (MW)) X (Capacity Factor) X ((365 Days) X (24 hrs/day)) / 2,000 lbs = Output: (NOx Tons/Year)

Step 5 – Percent NOx Reduction Calculation

$((\text{Output Baseline})_{\text{step 4}} - (\text{Output Subject})_{\text{step 2}} / (\text{Output Subject})_{\text{step 2}} = \%$ Reduction Output Subject

Step 6 – Percent Exempt Calculation

(Total Subject Facility Cost) X (% NOx Reduction) = Capital Cost of NOx Avoidance

Step 7 – Percent Exempt Calculation

Total Cost of NOx Avoidance / Total Cost of HB 3732 Equipment = % Exempt

- If % Exempt is greater than 100% HB 3732 Equipment is 100% Exempt
- If % Exempt is less than 100% then HB 3732 Equipment is partially exempt at the Step 6 calculation.

NOTE: See the attached calculation sheet for the details regarding Facility-specific calculations and property tax exemption percentage results based upon these calculations.

REFERENCES

1. "Output-Based Regulations: A Handbook for Air Regulators", U.S. Environmental Protection Agency, Office of Atmospheric Programs – Climate Protection Partnerships Division, August, 2004, p.4.

2. "Output-Based Emissions Standards; Advancing Innovative Energy Technologies", Northeast-Midwest Institute; 2003, p. 9.

3. IBID, p.13.

4. "Output-Based Regulations: A Handbook for Air Regulators", U.S. Environmental Protection Agency, Office of Atmospheric Programs – Climate Protection Partnerships Division, August, 2004, p.4.

5. http://www.cogeneration.net/Combined_Cycle_Power_Plants.htm

6. "Output-Based Emissions Standards; Advancing Innovative Energy Technologies", Northeast-Midwest Institute; 2003, p. 9.

9. PARTIAL PERCENTAGE CALCULATION

N/A.

10. PROPERTY CATEGORIES AND COSTS

See attached Schedule 10.

11. EMISSION REDUCTION INCENTIVE GRANT

Will an application for an Emission Reduction Incentive Grant be on file for this property/project:

[ ] Yes [X] No

12. APPLICATION DEFICIENCIES

After an initial review of the application, the TCEQ may determine that the information provided with the application is not sufficient to make a use determination. The TCEQ may send a notice of deficiency, requesting additional information that must be provided within 30 days of written notice.

13. FORMAL REQUEST FOR SIGNATURE

By signing this application, you certify that this information is true to the best of your knowledge and belief.

NAME: _____ DATE: 22 Apr. 2009

TITLE: Director

COMPANY: Duff and Phelps LLC

Under Texas Penal Code, Section 37.10, if you make a false statement on this application, you could receive a jail term of up to one year and a fine up to $2,000, or a prison term of two to 10 years and a fine of up to $5,000.

14. DELINQUENT FEE/PENALTY PROTOCOL

This form will not be processed until all delinquent fees and/or penalties owed to the TCEQ or the Office of the Attorney General on behalf of the TCEQ are paid in accordance with the Delinquent Fee and Penalty Protocol. (Effective 9/1/2006)

Navasota - Colorado Bend - Phase I
3821 S. State Hwy 60
TCEQ Use Determination Application - 2008
Scheule 10
Tier IV

10. PROPERTY CATEGORIES AND COST

PROPERTY	PROJECT ID. NO.	IN SERVICE DATE	TAXABLE ON OR BEFORE 1/1/947 (Y / N)	TIER IV DECISION FLOW CHART BOX	ECL NUMBER	ESTIMATED PURCHASE COST	% EXEMPT	EXEMPT COST
Heat Recovery Steam Generators (HRSG)	1	2007	N	3	B-8	$ 26,544,805	100%	$ 26,544,805
Steam Turbine System	2	2007	N	3	B-10	$ 10,091,206	100%	$ 10,091,206
					Tier IV Total	$ 36,636,012		$ 36,636,012

Navasota - Colorado Bend - Phase II
3821 S. State Hwy 60
TCEQ Use Determination Application - 2008
Schedule 10
Tier IV

10. PROPERTY CATEGORIES AND COST

PROPERTY	PROJECT ID. NO.	IN SERVICE DATE	TAXABLE ON OR BEFORE 1/1/94? (Y / N)	TIER IV DECISION FLOW CHART BOX	ECL NUMBER	ESTIMATED PURCHASE COST	% EXEMPT	EXEMPT COST
Heat Recovery Steam Generators (HRSG)	3	CWIP	N	3	B-8	$ 30,018,278	100%	$ 30,018,278
Steam Turbine System	4	CWIP	N	3	B-10	$ 22,386,336	100%	$ 22,386,336
					Tier IV Total	$ 52,404,614		$ 52,404,614

52 404 614
36 636 012
89 040 636

Noventa Mountain Energy Partners LP
Colorado Road Energy Center - Phase I
Scenario A: Cost Effectiveness Calculation

Subject Details:

Average Heat Rate [1]	7,746 (Btu/kWh)
NO_x Emissions [2]	168.6 Tons / year
Plant Capacity [3]	275 MW
Capacity Factor [4]	100.00%
Technology [5]	Combined Cycle
Total Subject Facility Cost [6]	$169,296,979
Total Cost of Tier IV Equipment [7]	$36,636,012

Baseline Details:

Average Heat Rate [8]	10,490 Btu/kWh
Technology [9]	Steam Turbine

STEP 1
Subject Current Heat Rate Conversion Calculation (NO_x lbs/MWh)

Input-based Limit (lbs NO_x/MMBtu)	x	Heat Rate (Btu/kWh)	/	Unit Conversions (1,000,000 Btu / 1000 kWh)	=	Output-based Limit (lbs NO_x/MWh)
0.0198		7,746		1,000		0.1533

STEP 2
Subject Current Conversion Calculation (NO_x Tons/Year)

Output-based Limit (lbs NO_x/MWh)	x	Capacity (MW)	x	Capacity Factor	x	Unit Conversions (365 days * 24 Hours / 2,000 lbs)	=	Output NO_x (Tons/Year)
0.1533		275		100.00%		4		168.6

STEP 3
Baseline Heat Rate Conversion Calculation (NO_x lbs/MWh)

Input-based Limit (lbs NO_x/MMBtu)	x	Heat Rate (Btu/kWh)	/	Unit Conversions (1,000,000 Btu / 1000 kWh)	=	Output-based Limit (lbs NO_x/MWh)
0.0198		10,490		1,000		0.2077

STEP 4
Baseline Annual Conversion Calculation (NO_x Tons/Year)

Output-based Limit (lbs NO_x/MWh)	x	Capacity (MW)	x	Capacity Factor	x	Unit Conversions (365 days * 24 Hours / 2,000 lbs)	=	Output NO_x (Tons/Year)
0.2077		275		100.00%		4		228.5

STEP 5
Percent NO_x Reduction Calculation

Baseline Emissions	-	Output Subject	/	Output Subject	=	% NO_x Reduction
228.5		168.6		168.6		25.5%

STEP 6
Percent Exempt Calculation

Total Subject Unit Cost	x	% NO_x Reduction	=	Capital Cost of NO_x Avoidance
$169,296,979		25.5%		$43,110,928

STEP 7
Percent Exempt Calculation

Total Cost of NO_x Avoidance	/	Total Cost of Tier IV Equipment	=	% Exempt
$60,100,428		$36,636,012		160.0%

Conclude	100%

(1) - Heat rate represents plant performance test heat rate (HHV) and was provided by the client
(2) - NO_x emissions is the NO_x guarantee emission permit limit in tons per year provided by the client
(3) - Plant capacity is the average annual capacity and was provided by the client
(4) - Capacity factor is the maximum operating level allowed under the emissions permit provided by the client
(5) - Technology represents the actual technology of the subject
(6) - Total subject facility cost represents the total cost to build the entire facility and it was determined based on data provided by the client
(7) - Total Tier IV equipment was determined by allocating the eligible TCEQ ECL per B equipment and their associated cost from actual data provided by the client
(8) - Baseline heat rate was published by the Energy Information Administration ("EIA")
(9) - Baseline technology represents the technology that the subject would have replaced at the time of the subject's construction.

Northern Wharton Energy Partner LP
Colorado Bend Energy Center - Phase II
Schedule A - 2008 Financial Efficiency Calculation

Subject Details:

Average Heat Rate [1]	7,746 Btu/kWh
NOx Emissions [2]	168.6 Tons / year
Plant Capacity [3]	275 MW
Capacity Factor [4]	100.00%
Technology [5]	Combined Cycle
Total Subject Facility Cost [6]	$112,042,622
Total Cost of Tier IV Equipment [7]	$52,404,614

Baseline Details:

Average Heat Rate [8]	10,490 Btu/kWh
Technology [9]	Steam Turbine

STEP 1
Subject Output-Based Emission Limit Calculation (lbs NOx/MWh)

Input-based Limit (lbs NOx/MMBtu)	x	Heat Rate (Btu/kWh)	/	Unit Conversions (1,000,000 Btu / 1000 kWh)	=	Output-based Limit (lbs NOx/MWh)
0.0198		7,746		1,000		0.1533

STEP 2
Subject Annual Emissions Calculation (lbs NOx/Year)

Output-based Limit (lbs NOx/MWh)	x	Capacity (MW)	x	Capacity Factor	x	Unit Conversions (365 days * 24 Hours / 2,000 lbs)	=	Output NO_x (Tons/Year)
0.1533		275		100.00%		4		168.6

STEP 3
Baseline Input-Based Limit Calculation (lbs NOx/MMBtu)

Input-based Limit (lbs NOx/MMBtu)	x	Heat Rate (Btu/kWh)	/	Unit Conversions (1,000,000 Btu / 1000 kWh)	=	Output-based Limit (lbs NOx/MWh)
0.0198		10,490		1,000		0.2077

STEP 4
Baseline Output-Based Emission Calculation (Tons/Year)

Output-based Limit (lbs NOx/MWh)	x	Capacity (MW)	x	Capacity Factor	x	Unit Conversions (365 days * 24 Hours / 2,000 lbs)	=	Output NO_x (Tons/Year)
0.2077		275		100.00%		4		228.5

STEP 5
Percent Reduction Calculation

(Output Baseline 228.5)	-	(Output Subject 168.6)	/	(Output Subject 168.6)	=	% NO_x Reduction 35.5%

STEP 6
Percent Exempt Calculation

Total Subject Facility Cost $112,042,622	x	% NO_x Reduction 35.5%	x	Percent Cost of NO_x Avoidance $57,535,202

STEP 7
Percent Exempt Calculation

Total Cost of NO_x Avoidance	/	Total Cost of IRS 3732 Equipment	=	% Exempt
$57,535,202		$52,404,614		109.8%

Conclude	100%

(1) - Heat rate represents the unbranded heat rate (HHV) and was provided by the client
(2) - NO_x emissions is the NO_x pollutant emission permit limit in tons per year provided by the client
(3) - Plant capacity is the average nominal capacity and was provided by the client
(4) - Capacity factor is the maximum operating level allowed under the emissions permit provided by the client
(5) - Technology represents the actual technology of the subject
(6) - Total subject facility cost represents the total cost to build the entire facility and was determined based on data provide by the client
(7) - Total Tier IV equipment was determined by allocating the eligible TCEQ BACT, part II equipment and their associated cost from actual data provide by the client
(8) - Baseline heat rate was published by the Energy Information Administration ("EIA")
(9) - Baseline technology represents the technology that the subject would have replaced at the time of the subjects construction

Buddy Garcia, *Chairman*
Larry R. Soward, *Commissioner*
Bryan W. Shaw, Ph.D., *Commissioner*
Glenn Shankle, *Executive Director*

TEXAS COMMISSION ON ENVIRONMENTAL QUALITY

Protecting Texas by Reducing and Preventing Pollution

April 8, 2008

DUFF & PHELPS LLC
GREG MAXIM
919 CONGRESS #1450
AUSTIN TX 78701 -

This letter is to inform you that on **4/8/2008**, Use Determination Application, **07-11926** (self assigned tracking number **DPCOBEND2008B**), was declared to be administratively complete. This application was filed for the following facility:

COLORADO BEND
3821 S STATE HWY 60
WHARTON TX 77488

The next step in the Use Determination Application process is the technical review of the application. If this is a Tier I, II, or III application the technical review will be completed within sixty days of the administrative complete date. If this is a Tier IV application the technical review will be completed within 30 days of the administrative complete date. If additional technical information is required a notice of deficiency letter (NOD) will be issued. The time period between the issuance of the NOD and the receipt of the response is not counted in determinating the length of the technical review .The TCEQ will notify you after the technical review has been completed. In accordance with the statute, the TCEQ has mailed a notice of receipt of this Use Determination Application to the WHARTON County Appraisal District. Please contact the Tax Relief for Pollution Control Property Program at (512) 239-3100 if you have any questions.

Sincerely,

Ron Hatlett
Tax Relief for Pollution Control Property Program

Buddy Garcia, *Chairman*
Larry R. Soward, *Commissioner*
Bryan W. Shaw, Ph.D., *Commissioner*
Glenn Shankle, *Executive Director*

TEXAS COMMISSION ON ENVIRONMENTAL QUALITY

Protecting Texas by Reducing and Preventing Pollution

March 19, 2008

CHIEF APPRAISER
WHARTON COUNTY APPRAISAL DISTRICT
2407 1/2 N RICHMOND RD
WHARTON TX 77488

This letter is to inform you that a Use Determination Application has been filed by:

NAVASOTA WHARTON ENERGY PARTNERS LP

for:

COLORADO BEND
3821 S STATE HWY 60
WHARTON TX 77488-

Appraisal District Account Number: 10258-000-000-00

This facility is located in WHARTON County.

A complete copy of the application is included with this letter. We recommend that a copy of this application be shared with the person who conducts the appraisal of this property.

This application has been assigned a tracking number of 07 -11926. Please contact the Tax Relief for Pollution Control Property Program at (512) 239-3100 if you have any questions.

Sincerely,

Ron Hatlett
Tax Relief for Pollution Control Property Program

Buddy Garcia, *Chairman*
Larry R. Soward, *Commissioner*
Bryan W. Shaw, Ph.D., *Commissioner*
Glenn Shankle, *Executive Director*

TEXAS COMMISSION ON ENVIRONMENTAL QUALITY

Protecting Texas by Reducing and Preventing Pollution

May 1, 2008

CHIEF APPRAISER
WHARTON COUNTY APPRAISAL DISTRICT
2407 1/2 N RICHMOND RD
WHARTON, TX 77488

This letter is to inform you that on 5/1/2008, a final determination was issued with regard to Use Determination application 07-11926, filed by:

NAVASOTA WHARTON ENERGY PARTNERS LP
COLORADO BEND
3821 S STATE HWY 60
WHARTON, TX 77488

A copy of the use determination is included with this letter. House Bill 3121, enacted during the 77th Legislature Session, established a process for appealing a use determination. The Texas Commission on Environmental Quality (TCEQ) rules that implement the appeals process are at 30 TAC 17.25. Pursuant to 17.25(a)(1), an appeal must be filed within 20 days of receipt of the use determination. Should you choose to appeal the use determination, please submit a copy of your appeal to the TCEQ Tax Relief for Pollution Control Property program at the time of filing the appeal with the Chief Clerk of the commission.

In order to qualify for a tax exemption, the applicant must file an exemption request with your appraisal district. This exemption request must be accompanied by a copy of the positive use determination issued by the TCEQ. If you have any questions regarding this Use Determination or the appeals process, please call me at 512/239-3100.

Sincerely,

David Greer
Team Leader, Pollution Prevention

Buddy Garcia, *Chairman*
Larry R. Soward, *Commissioner*
Bryan W. Shaw, Ph.D., *Commissioner*
Glenn Shankle, *Executive Director*

TEXAS COMMISSION ON ENVIRONMENTAL QUALITY

Protecting Texas by Reducing and Preventing Pollution

May 1, 2008

DUFF & PHELPS LLC
GREG MAXIM
919 CONGRESS #1450
AUSTIN, TX 78701

This letter is to inform you that on 5/1/2008, the technical review of Use Determination Application 07-11926 was completed. This application is for:

NAVASOTA WHARTON ENERGY PARTNERS LP
COLORADO BEND
3821 S STATE HWY 60
WHARTON, TX 77488

The use determination is included with this letter. In order to request an exemption, a copy of this Use Determination, along with a completed exemption request form #50-248 (can be found at www.cpa.state.tx.us), must be provided to the Chief Appraiser of the appropriate appraisal district. This request must be made by April 30.

House Bill 3121, enacted during the 77th Legislative Session, established a process for appealing a use determination. The Texas Commission on Environmental Quality (TCEQ) rules that implement the appeals process are at 30 TAC 17.25. Pursuant to 17.25(a)(1), an appeal must be filed within 20 days of receipt of the use determination. Should you choose to appeal the use determination, please submit a copy of your appeal to the TCEQ Tax Relief for Pollution Control Property program at the time of filing the appeal with the Chief Clerk of the commission.

If you have any questions or require any additional information, please contact the Tax Relief for Pollution Control Property Program at (512) 239-3100.

Sincerely,

David Greer
Team Leader, Pollution Prevention

Buddy Garcia, *Chairman*
Larry R. Soward, *Commissioner*
Bryan W. Shaw, Ph.D., *Commissioner*
Glenn Shankle, *Executive Director*

TEXAS COMMISSION ON ENVIRONMENTAL QUALITY

Protecting Texas by Reducing and Preventing Pollution

USE DETERMINATION

The Texas Commission on Environmental Quality has reviewed Use Determination Application, 07-11926, filed by:

NAVASOTA WHARTON ENERGY PARTNERS LP
COLORADO BEND
3821 S STATE HWY 60
WHARTON TX 77488

The pollution control property/project listed in the Use Determination Application is:

This facility has four thermally efficient heat recovery steam generators (HRSGs) and two steam turbines. This application is a Tier IV application seeking a partial use determination for the HRSGs and the enhanced steam turbines.

The outcome of the review is:

A 100% positive use determination for the four Heat Recovery Steam Generators. This equipment is considered to be pollution control equipment and was installed to meet or exceed federal or state regulations.

A negative determination is issued for the two steam turbines. The use of the steam turbines does not provide an environmental benefit at the site. The steam turbines are not considered to be pollution control equipment.

Executive Director

May 1, 2008
Date

TAX RELIEF FOR POLLUTION CONTROL PROPERTY: TECHNICAL REVIEW DOCUMENT

Reviewed By: RLH App. No.: 07 - 11926 Review Start Date: 4/8/2008

Company Name: NAVASOTA WHARTON ENERGY PARTNERS LP
Facility Name: COLORADO BEND
County: WHARTON Outstanding Fees: N
Batch/Voucher Number:B500028

ADMINISTRATIVE REVIEW

Administrative Complete Date:4/8/2008

TIER LEVEL
What Tier is this application? The application was filed as a Tier IV application. Is this the appropriate level?

The property listed on this application, Heat Recovery Steam Generators and a steam turbine are items B8 and B10 on the Equipment and Categories List. This application was filed as a Tier IV, Tier IV is the appropriate level for this application.

RELEVANT RULE, REGULATION, OR STATUTORY PROVISION
The rule listed in the application is: 40 CFR 60.44Da
The appropriate rule is: 40 CFR 60.44Da

Explain why this is the appropriate rule?

40 CFR 60.Subpart DA: Standards of Performance for New Stationary Sources. Standards of performance for Electric Utility Steam Generating Units for Which Construction is Commenced after September 18, 1978. This is an appropriate rule.

BRIEF DESCRIPTION OF PROPERTY
The property is described as:

This facility has four thermally efficient heat recovery steam generators (HRSGs) and two steam turbines. This application is a Tier IV application seeking a partial use determination for the HRSGs and the enhanced steam turbines.

Is an adequate description and purpose of the property provided? Does it list the anticipated environmental benefits? Are sketches and flow diagrams provided if needed?

An adequate description of the property was provided, and the purpose of the property was listed. The anticipated environmental benefit is listed. Sketches and flow diagrams were provided.

DECISION FLOWCHART(30 TAC 17.15(a))
Mark the appropriate boxes: Box 3 Box 5 Box 6(IV) Y Box 10(III) Box 12(I) Box 13(II)
PART B DECISION FLOWCHART (17.15(b))
Mark the appropriate boxes: Box 1Y Box 2 Y Box 3 Y

Describe how the property flowed through the Decision Flowchart:

The Heat Recovery Steam Generators (HRSGs) are listed on Part B of the Equipment & Categories List as item B-8. As Part B equipment the HRSGs leave the Decision Flow Chart at Box 6 and pass through Box 1 of the Part B Decision Flow Chart with a yes answer. Since the use

of HRSGs provide an environmental benefit of reduced NOx emissions at the site there is a yes answer for Box 2. Since there is a reduction in NOx emissions there is an environmental rule which is being met, so there is a yes answer to Box 3. The steam turbine passes through Box 1 on the Part B Decision Flow Chart with a yes answer. Since the use of the steam turbine does not provide an environmental benefit at the site a no answer is the result of Box 2. The steam turbine is not eligible for a positive determination.

TIER III or IV APPLICATIONS

Does your calculation agree with the applicants?

No. The application contains a proposed formula for calculating the pollution control value of the HRSGs and the steam turbine. The formula is outcome determinative, and its focus is not on the pollution control aspect of the property. The Executive Director disagrees with this formula.

PROPERTY CATEGORIES AND COSTS

Is the table completed correctly? Has the applicant certified that all listed property became taxable for the first time after January 1, 1994? Is all information necessary for conducting the technical review included.

The table was completed correctly. The applicant certified that all listed property became taxable for the first time after January 1, 1994. All the information necessary for conducting the technical review was included on the application.

TECHNICAL DEFICIENCIES

Is the application complete as received: Y If the application was not administratively complete explain below when justifying the final decision in the final determination section. If the application was not technically complete then:

Provide the language to be used in the Notice of Deficiency (NOD) letter:

Summarize the NOD response:

Provide the language used in the second NOD letter:

Summarize the second NOD response:

Provide the language used in the thied NOD letter:

Summarize the third NOD response:

FINAL DETERMINATION

If the property description has been summarized enter the detailed property description:

This facility has four thermally efficient heat recovery steam generators (HRSGs) and two steam

turbines. This application is a Tier IV application seeking a partial use determination for the HRSGs and the enhanced steam turbines.

Provide the reason for your final determination:

The Heat Recovery Steam Generators meet all of the requirements of Chapter 17. A positive use determination based on the most appropriate formula should be issued for the Heat Recovery Steam Generators. The most appropriate formula has been determined by the Executive Director. A negative determination should be issued for the steam turbine. The use of the steam turbine does not result in there being an environmental benefit at the site.

Provide the language for the final determination.

A positive use determination of 100% for the four Heat Recovery Steam Generators. A negative determination is issued for the steam turbine. The use of the steam turbine does not provide an environmental benefit at the site. The steam turbine is not considered to be pollution control equipment.

Highlight the required signatures and establish the appropriate due dates.

Reviewed: **Date Signed:** 5/1/08

Peer Reviewed: **Date Signed:** 5-1-08

Team Leader: **Date Signed:** 5/1/08

Section Manager: **Date Signed:** MAY 1 2008

Division Director: **Date Signed:** MAY 1 2008

Buddy Garcia, *Chairman*
Larry R. Soward, *Commissioner*
Bryan W. Shaw, Ph.D., *Commissioner*
Glenn Shankle, *Executive Director*

TEXAS COMMISSION ON ENVIRONMENTAL QUALITY

Protecting Texas by Reducing and Preventing Pollution

April 8, 2008

CALPINE/DOW
JUSTIN HYLAND/LEO SCHERRER
717 TEXAS AVE
HOUSTON TX 77002 -

This letter is to inform you that on 4/8/2008, Use Determination Application, 07-11994 (self assigned tracking number), was declared to be administratively complete. This application was filed for the following facility:

FREEPORT ENERGY CENTER LP
2301 N BRAZOSPORT BLVD
FREEPORT TX 77451

The next step in the Use Determination Application process is the technical review of the application. If this is a Tier I, II, or III application the technical review will be completed within sixty days of the administrative complete date. If this is a Tier IV application the technical review will be completed within 30 days of the administrative complete date. If additional technical information is required a notice of deficiency letter (NOD) will be issued. The time period between the issuance of the NOD and the receipt of the response is not counted in determinating the length of the technical review .The TCEQ will notify you after the technical review has been completed. In accordance with the statute, the TCEQ has mailed a notice of receipt of this Use Determination Application to the BRAZORIA County Appraisal District. Please contact the Tax Relief for Pollution Control Property Program at (512) 239-3100 if you have any questions.

Sincerely,

Ron Hatlett
Tax Relief for Pollution Control Property Program

Buddy Garcia, *Chairman*
Larry R. Soward, *Commissioner*
Bryan W. Shaw, Ph.D., *Commissioner*
Glenn Shankle, *Executive Director*

TEXAS COMMISSION ON ENVIRONMENTAL QUALITY

Protecting Texas by Reducing and Preventing Pollution

April 03, 2008

CHIEF APPRAISER
BRAZORIA COUNTY APPRAISAL DISTRICT
500 N CHENANGO ST
ANGLETON TX 77515

This letter is to inform you that a Use Determination Application has been filed by:

FREEPORT ENERGY CENTER LP

for:

FREEPORT ENERGY CENTER LP
2301 N BRAZOSPORT BLVD
FREEPORT TX 77451-

This facility is located in **BRAZORIA** County.

A complete copy of the application is included with this letter. We recommend that a copy of this application be shared with the person who conducts the appraisal of this property.

This application has been assigned a tracking number of **07 -11994**. Please contact the Tax Relief for Pollution Control Property Program at (512) 239-3100 if you have any questions.

Sincerely,

Ron Hatlett
Tax Relief for Pollution Control Property Program

4/2/2008 6:00:51PM

PROPHECY A/R OUTSTANDNG PAST DUE TRANSACTIONS REPORT

ACCOUNT	FEE	CUSTOMER NAME	INVOICE	FAC/PER	TRAN DATE	DUE DATE	DESCRIPTION	TRAN BALANCE OUTSTANDING
00234421U	UST	FREEMAN OR	SC2508-005	0000043732	APR11,05	APR11,05	LATE FEE FOR UST0556893	0.52
00234421U	UST	FREEMAN OR	SC2508-006	0000043732	APR11,05	APR11,05	LATE FEE FOR UST0526431	0.52
00234421U	UST	FREEMAN OR	SC2508-007	0000043732	APR11,05	APR11,05	LATE FEE FOR UST0500214	0.52
00234421U	UST	FREEMAN OR	SC2508-008	0000043732	APR11,05	APR11,05	LATE FEE FOR UST0467889	0.52
00234421U	UST	FREEMAN OR	SC2509-001	0000043732	MAY10,05	MAY10,05	LATE FEE FOR UST0654261	0.52
00234421U	UST	FREEMAN OR	SC2509-002	0000043732	MAY10,05	MAY10,05	LATE FEE FOR UST0631019	0.52
00234421U	UST	FREEMAN OR	SC2509-003	0000043732	MAY10,05	MAY10,05	LATE FEE FOR UST0606742	0.52
00234421U	UST	FREEMAN OR	SC2509-004	0000043732	MAY10,05	MAY10,05	LATE FEE FOR UST0581320	0.52
00234421U	UST	FREEMAN OR	SC2509-005	0000043732	MAY10,05	MAY10,05	LATE FEE FOR UST0556893	0.52
00234421U	UST	FREEMAN OR	SC2509-006	0000043732	MAY10,05	MAY10,05	LATE FEE FOR UST0526431	0.52
00234421U	UST	FREEMAN OR	SC2509-007	0000043732	MAY10,05	MAY10,05	LATE FEE FOR UST0500214	0.52
00234421U	UST	FREEMAN OR	SC2509-008	0000043732	MAY10,05	MAY10,05	LATE FEE FOR UST0467889	0.52
00234421U	UST	FREEMAN OR	SC2510-001	0000043732	JUN09,05	JUN09,05	LATE FEE FOR UST0654261	0.52
00234421U	UST	FREEMAN OR	SC2510-002	0000043732	JUN09,05	JUN09,05	LATE FEE FOR UST0631019	0.52
00234421U	UST	FREEMAN OR	SC2510-003	0000043732	JUN09,05	JUN09,05	LATE FEE FOR UST0606742	0.52
00234421U	UST	FREEMAN OR	SC2510-004	0000043732	JUN09,05	JUN09,05	LATE FEE FOR UST0581320	0.52
00234421U	UST	FREEMAN OR	SC2510-005	0000043732	JUN09,05	JUN09,05	LATE FEE FOR UST0556893	0.52
00234421U	UST	FREEMAN OR	SC2510-006	0000043732	JUN09,05	JUN09,05	LATE FEE FOR UST0526431	0.52
00234421U	UST	FREEMAN OR	SC2510-007	0000043732	JUN09,05	JUN09,05	LATE FEE FOR UST0500214	0.52
00234421U	UST	FREEMAN OR	SC2510-008	0000043732	JUN09,05	JUN09,05	LATE FEE FOR UST0467889	0.52
00234421U	UST	FREEMAN OR	UST0676591	0000043732	SEP30,05	OCT30,05	UGROUND TANK FEE TANKS.FY0	100.00
00234421U	UST	FREEMAN OR	UST0702372	0000043732	SEP30,06	OCT30,06	UGROUND TANK FEE TANKS.FY0	100.00
							TOTAL ACCOUNT: 00234421U	1,780.65
FREEMAN VICKIE								
00488051U	UNCO	UN07						
00488051U	UST	FREEMAN VICKIE	UST0444440	0000068421	SEP30,96	OCT30,96	UGROUND TANK FEE TANKS.FY9	100.00
00488051U	UST	FREEMAN VICKIE	UST0444441	0000068421	SEP30,96	OCT30,96	UGROUND TANK FEE TANKS.FY9	100.00
00488051U	UST	FREEMAN VICKIE	UST0444442	0000068421	SEP30,96	OCT30,96	UGROUND TANK FEE TANKS.FY9	100.00
00488051U	UST	FREEMAN VICKIE	UST0444443	0000068421	SEP30,96	OCT30,96	UGROUND TANK FEE TANKS.FY9	100.00
00488051U	UST	FREEMAN VICKIE	UST0444444	0000068421	SEP30,96	OCT30,96	UGROUND TANK FEE TANKS.FY9	100.00
00488051U	UST	FREEMAN VICKIE	UST0444445	0000068421	SEP30,96	OCT30,96	UGROUND TANK FEE TANKS.FY9	100.00
00488051U	UST	FREEMAN VICKIE	UST0444446	0000068421	SEP30,96	OCT30,96	UGROUND TANK FEE TANKS.FY8	50.00
00488051U	UST	FREEMAN VICKIE	UST0444447	0000068421	SEP30,96	OCT30,96	UGROUND TANK FEE TANKS.FY8	50.00
							TOTAL ACCOUNT: 00488051U	700.00
FRESH INC DBA PRINCE								
24000027								
24000027	DCR	FRESH INC DBA PRINCE	DCR0060546	105090195	JAN31,08	MAR01,08	DRY CLEAN REG FEE FY08Q2	62.50

14. FORMAL REQUEST FOR SIGNATURE

By signing this application, you certify that this information is true to the best of your knowledge and belief.

NAME: Leo Scherer DATE: 3/28/2008

TITLE: Sr Tax Specialist

COMPANY: The Dow Chemical Co.

Under Texas Penal Code, Section 37.10, if you make a false statement on this application, you could receive a jail term of up to one year and a fine up to $2,000, or a prison term of two to 10 years and a fine of up to $5,000.

15. DELINQUENT FEE/PENALTY PROTOCOL

This form will not be processed until all delinquent fees and/or penalties owed to the TCEQ or the Office of the Attorney General on behalf of the TCEQ are paid in accordance with the Delinquent Fee and Penalty Protocol.(Effective September 1, 2006)

11. PROPERTY CATEGORIES AND COSTS

Property	Property Taxable on or before 1/01/94	Decision Flow Chart Box 7, 9, or 11	PEL Number	Estimated Purchase Cost	Partial Percentage
Land					
Property Heat recovery steam generation system Steam turbine/generator, Condenser and ancillary pump system.	No	3, Fig 17.15 (b)	 B-8 B-10 B-8	 $15.300,000 $18,000,000 $8.000,000	98%
Totals				$41,300,000	98%

12. EMISSION REDUCTION INCENTIVE GRANT

Will an application for an Emission Reduction Incentive Grant be filed for this property/project:

[ ] Yes [X] No

13. APPLICATION DEFICIENCIES

After an initial review of the application, the TCEQ may determine that the information provided with the application is not sufficient to make a use determination. The TCEQ may send a notice of deficiency, requesting additional information that must be provided within 30 days of the written notice.

Partial Percentage:

This power generation facility is located in an Ozone Non-attainment area, Brazoria county, and therefore NOx reductions were mandatory at the Freeport site of The Dow Chemical Company. In order to meet the NOx reduction an agreement was reached whereby the Freeport Energy Center (Calpine) built a replacement power generation facility to replace Dow's aging Power 4 plant. The Power 4 plant had an effective age of over 40 years. The new power generation facility was built with NOx reduction being the primary driving force. The existing power generation facility owned by The Dow Chemical Company was shutdown. On a ppm basis NOx concentrations were reduced from 147 ppm at the old existing power facility to a lower level of 3 ppm with the new power generation facility. Due to the age of the existing facility a retrofit was not practical.

The partial percentage is calculated and based on the NOx reduction.

$$V\% = \frac{147 \text{ ppm} - 3 \text{ ppm}}{147 \text{ ppm}} \times 100 = 98\%$$

F. Customer Number or Regulated Entity Number: _____

5. **APPRAISAL DISTRICT WITH TAXING AUTHORITY OVER PROPERTY**

A. Name of Appraisal District: Brazoria County Appraisal District

B. Appraisal District Account Number: POLL-Fren-001

6. **CONTACT NAME (must be provided)**

A. Company/Organization Name: Calpine/Dow

B. Name of Individual to Contact: Justin Hyland/Leo Scherrer

C. Mailing Address: 717 Texas Avenue

D. City, State, ZIP: Houston, TX 77002

E. Telephone number and fax number: (713) 830-8873 / (713) 830-8670

F. E-Mail address (if available): HylandJ@Calpine.com Lscherrer@dow.com

7. **RELEVANT RULE, REGULATION, OR STATUTORY PROVISION**

MEDIUM	RULE/REGULATION/LAW
Air	40 CFR Part 60 Standards of Performance for New Stationary Sources, General Conditions Subpart A, HRSGs Subpart Dv, Subpart GG Standards of Performance for Stationary Gas Turbines.
Water	
Waste	

8. **DESCRIPTION OF PROPERTY (Complete for all applications)**

This project included the installation of a HRSG (heat recovery steam generation) system. This project was driven by the requirement to reduce NOx. The existing power generation could not be retrofitted and achieve the required NOx reduction.

TEXAS
COMMISSION
ON ENVIRONMENTAL
QUALITY

C 32233 TEXAS COMMISSION ON ENVIRONMENTAL QUALITY
APPLICATION FOR USE DETERMINATION
FOR POLLUTION CONTROL PROPERTY

2008 MAY 23 AM 8:43

CHIEF CLERKS OFFICE

The Texas Commission on Environmental Quality (TCEQ) has the responsibility to determine whether a property is a pollution control property. A person or political subdivision seeking a use determination for pollution control property must complete the attached application or use a copy or similar reproduction. For assistance in completing this form refer to the TCEQ guidelines document, *Property Tax Exemptions for Pollution Control Property*, as well as 30 TAC §17, rules governing this program. For additional assistance please contact the TCEQ Tax Relief for Pollution Control Property Program at (512) 239-6348 or (512)239-1917. The application should be completed and mailed, with the appropriate fee, to: TCEQ MC-214, Cashiers Office, P.O. Box 13088, Austin, Texas 78711-3088.

1. GENERAL INFORMATION

A. What is the type of ownership of this facility:

[ ] Corporation [ ] Sole Proprietor
[ ] Partnership [ ] Utility
[X] Limited Partnership [ ] Other

B. Size of company: Number of Employees

[X] 1 to 99 [ ] 1,000 to 1,999
[] 100 to 499 [] 2,000 or more
[ ] 500 to 999

C. Business Description: (Provide a brief description of the type of business or activity at the facility): Power generation.

2. TYPE OF APPLICATION

A. [ ] **Tier I** $150 Application Fee.
B. [ ] **Tier II** $1,000 Application Fee.
C. [ ] **Tier III** $2,500 Application Fee.
d. [X] **Tier IV** $500 Application Fee.

NOTE: Enclose a check or money order to the TCEQ along with the application to cover the required fee.

3. NAME OF APPLICANT

A. Company Name: Freeport Energy Center, L.P.
B. Mailing Address (Street or PO Box): 4100 Underwood Road
C. City, State, ZIP: Pasedena, TX 7507

4. PHYSICAL LOCATION OF PROPERTY REQUESTING A TAX EXEMPTION

A. Name of Facility or Unit: Freeport Energy Center, L.P.
B. Type of Mfg. Process or Service: Electric Power Generation
C. Street Address: 2301 N. Brazosport Blvd
D. City, State, ZIP: Freeport, TX 77541
E. Tracking Number Assigned by Applicant: _____

07-11994

Executive Director's Exhibit 5

Freeport: Application and Use Determination Documents

turbine. This application is a Tier IV application seeking a partial use determination for the HRSGs and the enhanced steam turbines.

Provide the reason for your final determination:

The Heat Recovery Steam Generators meet all of the requirements of Chapter 17. A positive use determination based on the most appropriate formula should be issued for the Heat Recovery Steam Generators. The most appropriate formula has been determined by the Executive Director. A negative determination should be issued for the steam turbine. The use of the steam turbine does not result in there being an environmental benefit at the site.

Provide the language for the final determination.

A positive use determination of 100% for the two Heat Recovery Steam Generators. A negative determination is issued for the steam turbine. The use of the steam turbine does not provide an environmental benefit at the site. The steam turbine is not considered to be pollution control equipment.

Highlight the required signatures and establish the appropriate due dates.

Reviewed: Ronald Hall **Date Signed:** 5/1/08

Peer Reviewed: [illegible] **Date Signed:** 5-1-08

Team Leader: [illegible] **Date Signed:** 5/1/08

Section Manager: [illegible] **Date Signed:** MAY 1 2008

Division Director: [illegible] **Date Signed:** MAY 1 2008

cycle plant, provides an environmental benefit of reduced NOx emissions at the site. So there is a Yes answer for Box 2. Since there is a reduction in NOx emissions there is an environmental rule which is being met so there is a yes answer to Box 3. The steam turbine passes through Box 1 on the Part B Decision Flow Chart with a yes answer. Since the use of the steam turbine does not provide an environmental benefit at the site a no answer is the result of Box 2. The steam turbine is not eligible for a positive determination.

TIER III or IV APPLICATIONS

Does your calculation agree with the applicants?

No. The application contains a proposed formula for calculating the pollution control value of the HRSGs and the steam turbine. The formula is outcome determinative, and its focus is not on the pollution control aspect of the property. The Executive Director disagrees with this formula.

PROPERTY CATEGORIES AND COSTS

Is the table completed correctly? Has the applicant certified that all listed property became taxable for the first time after January 1, 1994? Is all information necessary for conducting the technical review included.

The table was completed correctly. The applicant certified that all listed property became taxable for the first time after January 1, 1994. All the information necessary for conducting the technical review was included on the application.

TECHNICAL DEFICIENCIES

Is the application complete as received: Y If the application was not administratively complete explain below when justifying the final decision in the final determination section. If the application was not technically complete then:

Provide the language to be used in the Notice of Deficiency (NOD) letter:

Summarize the NOD response:

Provide the language used in the second NOD letter:

Summarize the second NOD response:

Provide the language used in the thied NOD letter:

Summarize the third NOD response:

FINAL DETERMINATION

If the property description has been summarized enter the detailed property description:

This facility has two thermally efficient heat recovery steam generators (HRSGs) and one steam

TAX RELIEF FOR POLLUTION CONTROL PROPERTY: TECHNICAL REVIEW DOCUMENT

Reviewed By: RLH App. No.: 07 - 11969 Review Start Date: 4/8/2008

Company Name: BRAZOS VALLEY ENERGY LP
Facility Name: BRAZOS VALLEY ENERGY
County: FORT BEND Outstanding Fees: N
Batch/Voucher Number:B500156

ADMINISTRATIVE REVIEW

Administrative Complete Date:4/8/2008

TIER LEVEL
What Tier is this application? The application was filed as a Tier IV application. Is this the appropriate level?

The property listed on this application, Heat Recovery Steam Generators and a steam turbine are items B8 and B10 on the Equipment and Categories List. This application was filed as a Tier IV. Tier IV is the appropriate level for this application.

RELEVANT RULE, REGULATION, OR STATUTORY PROVISION
The rule listed in the application is: 40 CFR 60.44Da
The appropriate rule is: 40 CFR 60.44Da

Explain why this is the appropriate rule?

40 CFR 60.Subpart DA: Standards of Performance for New Stationary Sources. Standards of performance for Electric Utility Steam Generating Units for Which Construction is Commenced after September 18, 1978. This is an appropriate rule.

BRIEF DESCRIPTION OF PROPERTY
The property is described as:

This facility has two thermally efficient heat recovery steam generators (HRSGs) and one steam turbine. This application is a Tier IV application seeking a partial use determination for the HRSGs and the enhanced steam turbines.

Is an adequate description and purpose of the property provided? Does it list the anticipated environmental benefits? Are sketches and flow diagrams provided if needed?

An adequate description of the property was provided, and the purpose of the property was listed. The anticipated environmental benefit is listed. Sketches and flow diagrams were provided.

DECISION FLOWCHART(30 TAC 17.15(a))
Mark the appropriate boxes: Box 3 Box 5 Box 6(IV) Y Box 10(III) Box 12(I) Box 13(II)
PART B DECISION FLOWCHART (17.15(b))
Mark the appropriate boxes: Box 1Y Box 2 Y Box 3 Y

Describe how the property flowed through the Decision Flowchart:

Since the property is listed on Part B of the Equipment & Categories List this property leaves the Decision Flow Chart at Box 6. It passes through Box 1 of the Part B Decision Flow Chart with a yes answer. The use of this property at a combined cycle plant, as opposed to having a simple

Buddy Garcia, *Chairman*
Larry R. Soward, *Commissioner*
Bryan W. Shaw, Ph.D., *Commissioner*
Glenn Shankle, *Executive Director*

TEXAS COMMISSION ON ENVIRONMENTAL QUALITY

Protecting Texas by Reducing and Preventing Pollution

March 28, 2008

CHIEF APPRAISER
FORT BEND COUNTY APPRAISAL DISTRICT
2801 B F TERRY BLVD
ROSENBERG TX 77471

This letter is to inform you that a Use Determination Application has been filed by:

BRAZOS VALLEY ENERGY LP

for:

BRAZOS VALLEY ENERGY
3440 LOCKWOOD RD
RICHMOND TX 77469-

Appraisal District Account Number: **0348-00-000-0203-901**

This facility is located in **FORT BEND** County.

A complete copy of the application is included with this letter. We recommend that a copy of this application be shared with the person who conducts the appraisal of this property.

This application has been assigned a tracking number of 07 -11969. Please contact the Tax Relief for Pollution Control Property Program at (512) 239-3100 if you have any questions.

Sincerely,

Ron Hatlett
Tax Relief for Pollution Control Property Program

Buddy Garcia, *Chairman*
Larry R. Soward, *Commissioner*
Bryan W. Shaw, Ph.D., *Commissioner*
Glenn Shankle, *Executive Director*

TEXAS COMMISSION ON ENVIRONMENTAL QUALITY

Protecting Texas by Reducing and Preventing Pollution

April 8, 2008

DUFF & PHELPS LLC
GREG MAXIM
919 CONGRESS #1450
AUSTIN TX 78701 -

This letter is to inform you that on **4/8/2008**, Use Determination Application, **07-11969** (self assigned tracking number **DPBRAZOSVALLEY B**), was declared to be administratively complete. This application was filed for the following facility:

BRAZOS VALLEY ENERGY
3440 LOCKWOOD RD
RICHMOND TX 77469

The next step in the Use Determination Application process is the technical review of the application. If this is a Tier I, II, or III application the technical review will be completed within sixty days of the administrative complete date. If this is a Tier IV application the technical review will be completed within 30 days of the administrative complete date. If additional technical information is required a notice of deficiency letter (NOD) will be issued. The time period between the issuance of the NOD and the receipt of the response is not counted in determinating the length of the technical review .The TCEQ will notify you after the technical review has been completed. In accordance with the statute, the TCEQ has mailed a notice of receipt of this Use Determination Application to the **FORT BEND** County Appraisal District. Please contact the Tax Relief for Pollution Control Property Program at (512) 239-3100 if you have any questions.

Sincerely,

Ron Hatlett
Tax Relief for Pollution Control Property Program

Buddy Garcia, *Chairman*
Larry R. Soward, *Commissioner*
Bryan W. Shaw, Ph.D., *Commissioner*
Glenn Shankle, *Executive Director*

TEXAS COMMISSION ON ENVIRONMENTAL QUALITY

Protecting Texas by Reducing and Preventing Pollution

USE DETERMINATION

The Texas Commission on Environmental Quality has reviewed Use Determination Application, 07-11969, filed by:

BRAZOS VALLEY ENERGY LP
BRAZOS VALLEY ENERGY
3440 LOCKWOOD RD
RICHMOND TX 77469

The pollution control property/project listed in the Use Determination Application is:

This facility has two thermally efficient heat recovery steam generators (HRSGs) and one steam turbine. This application is a Tier IV application seeking a partial use determination for the HRSGs and the enhanced steam turbines.

The outcome of the review is:

A 100% positive use determination for the two Heat Recovery Steam Generators. This equipment is considered to be pollution control equipment and was installed to meet or exceed federal or state regulations.

A negative determination is issued for the steam turbine. The use of the steam turbine does not provide an environmental benefit at the site. The steam turbine is not considered to be pollution control equipment.

Executive Director

May 2 2008
Date

Buddy Garcia, *Chairman*
Larry R. Soward, *Commissioner*
Bryan W. Shaw, Ph.D., *Commissioner*
Glenn Shankle, *Executive Director*

TEXAS COMMISSION ON ENVIRONMENTAL QUALITY

Protecting Texas by Reducing and Preventing Pollution

May 1, 2008

DUFF & PHELPS LLC
GREG MAXIM
919 CONGRESS #1450
AUSTIN, TX 78701

This letter is to inform you that on 5/1/2008, the technical review of Use Determination Application 07-11969 was completed. This application is for:

BRAZOS VALLEY ENERGY LP
BRAZOS VALLEY ENERGY
3440 LOCKWOOD RD
RICHMOND, TX 77469

The use determination is included with this letter. In order to request an exemption, a copy of this Use Determination, along with a completed exemption request form #50-248 (can be found at www.cpa.state.tx.us), must be provided to the Chief Appraiser of the appropriate appraisal district. This request must be made by April 30.

House Bill 3121, enacted during the 77th Legislative Session, established a process for appealing a use determination. The Texas Commission on Environmental Quality (TCEQ) rules that implement the appeals process are at 30 TAC 17.25. Pursuant to 17.25(a)(1), an appeal must be filed within 20 days of receipt of the use determination. Should you choose to appeal the use determination, please submit a copy of your appeal to the TCEQ Tax Relief for Pollution Control Property program at the time of filing the appeal with the Chief Clerk of the commission.

If you have any questions or require any additional information, please contact the Tax Relief for Pollution Control Property Program at (512) 239-3100.

Sincerely,

David Greer
Team Leader, Pollution Prevention

Buddy Garcia, *Chairman*
Larry R. Soward, *Commissioner*
Bryan W. Shaw, Ph.D., *Commissioner*
Glenn Shankle, *Executive Director*

TEXAS COMMISSION ON ENVIRONMENTAL QUALITY

Protecting Texas by Reducing and Preventing Pollution

May 1, 2008

CHIEF APPRAISER
FORT BEND COUNTY APPRAISAL DISTRICT
2801 B F TERRY BLVD
ROSENBERG, TX 77471

This letter is to inform you that on 5/1/2008, a final determination was issued with regard to Use Determination application 07-11969, filed by:

BRAZOS VALLEY ENERGY LP
BRAZOS VALLEY ENERGY
3440 LOCKWOOD RD
RICHMOND, TX 77469

A copy of the use determination is included with this letter. House Bill 3121, enacted during the 77th Legislature Session, established a process for appealing a use determination. The Texas Commission on Environmental Quality (TCEQ) rules that implement the appeals process are at 30 TAC 17.25. Pursuant to 17.25(a)(1), an appeal must be filed within 20 days of receipt of the use determination. Should you choose to appeal the use determination, please submit a copy of your appeal to the TCEQ Tax Relief for Pollution Control Property program at the time of filing the appeal with the Chief Clerk of the commission.

In order to qualify for a tax exemption, the applicant must file an exemption request with your appraisal district. This exemption request must be accompanied by a copy of the positive use determination issued by the TCEQ. If you have any questions regarding this Use Determination or the appeals process, please call me at 512/239-3100.

Sincerely,

David Greer
Team Leader, Pollution Prevention

If you have any questions regarding the Application or the information supplied with these Application, please contact Greg Maxim of Duff & Phelps, LLC at (512) 671-5580 or e-mail at gregory.maxim@duffandphelps.com.

Very truly yours,

DUFF & PHELPS LLC

Signature:

Name: Greg Maxim

Title: Director

Enclosures

DUFF & PHELPS

Greg Maxim
Director
Phone:(512) 671-5580
gregory.maxim@duffandphelps.com

March 20, 2008

TCEQ - Cashiers Office MC-214
Building A
12100 Park 35 Circle
Austin, Texas 78753

Subject: Application for Use Determination for Pollution Control Property
Brazos Valley Energy - 3440 Lockwood Road Richmond, Texas 77469

Enclosed please find one application (the "Application") for property tax exemptions for certain qualifying pollution control property at the Brazos Valley Energy Project (the "Facility") in Fort Bend County, Texas.

Pursuant to Title 30 of Chapter 17 of the Texas Administrative Code, the Application has been prepared using the Texas Commission on Environmental Quality ("TCEQ") Application for Use Determination for Pollution Control Property. The enclosed application is a Tier IV Application.

Submission of this Application is required as a process step in the TCEQ's pollution control certification process for tax exemption of certain assets used in pollution control capacities within the Facility. As outlined by the application instructions, the fee for this Tier IV Application is $500. Enclosed please find a check for $500 for the Application processing.

The Application can be summarized as follows:

Property	Description	Estimated Cost
Tier IV	See Attached Schedule	$56,913,424

Please send one copy of the completed property tax exemption Use Determination to the following address:

Duff and Phelps LLC
c/o Greg Maxim
919 Congress Ave.
Suite 1450
Austin, TX 78701

Cahokia
Illinois Valley
SAMPLE A - 100% Thermal Efficiency Calculation

Subject Details:

Average Heat Rate [1]		7,050 (Btu/kWh)
NOx Emission [2]		117.17 Tons / year
Plant Capacity [3]		550 MW
Capacity Factor [4]		69.96%
Technology [5]		Combined Cycle
Total Subject Facility Cost [6]	$	290,000,000
Total Cost of Tier IV Equipment [7]	$	56,913,424

Baseline Details:

Average Heat Rate [8]		10,490 Btu/kWh
Technology [9]		Steam Turbine

STEP 1
Subject Output-Based Limit Calculation (lbs NOx/MWh)

Input-based Limit (lbs NOx/MMBtu)	x	Heat Rate (Btu/kWh)	/	Unit Conversions (1,000,000 Btu / 1000 kWh)	=	Output-based Limit (lbs NOx/MWh)
0.0108		7,050		1,000		0.0761

STEP 2
Subject Output-Based Emissions Calculation (Tons/Year)

Output-based Limit (lbs NOx/MWh)	x	Capacity (MW)	x	Capacity Factor	x	Unit Conversions (365 days * 24 Hours / 2,000 lbs)	=	Output NOx (Tons/Year)
0.0761		550		69.96%		4		117.2

STEP 3
Baseline Output-Based Limit Calculation (lbs NOx/MWh)

Input-based Limit (lbs NOx/MMBtu)	x	Heat Rate (Btu/kWh)	/	Unit Conversions (1,000,000 Btu / 1000 kWh)	=	Output-based Limit (lbs NOx/MWh)
0.0108		10,490		1,000		0.1133

STEP 4
Baseline Output-Based Emissions Calculation (lbs NOx/MWh)

Output-based Limit (lbs NOx/MWh)	x	Capacity (MW)	x	Capacity Factor	x	Unit Conversions (365 days * 24 Hours / 2,000 lbs)	=	Output NOx (Tons/Year)
0.1133		550		69.96%		4		174.4

STEP 5
Percent NOx Reduction Calculation

Baseline Emissions 174.4	-	Output Subject 117.2	/	Output Subject 117.2	=	% NOx Reduction 48.8%

STEP 6
Annual Equivalent Calculation

Total Subject Unit Cost 290,000,000	x	% NOx Reduction 48.8%	=	Equivalent Cost of NOx Avoidance $141,520,000

STEP 7
Percent Tier IV Calculation

Total Cost of NOx Avoidance $141,520,000	/	Total Cost of BH 5932 Equipment 56,913,424	=	% Exempt 248.7%

Conclude	100%

(1) - Heat rate represents plant actual heat rate (HHV) and was provided by the client
(2) - NOx emissions is the annual NOx pollution produced in tons and was provide by the client
(3) - Plant capacity is the average nominal capacity and was provided by the client
(4) - Capacity factor represents an average annual capacity factor and was provided by the client
(5) - Technology represents the actual technology of the subject
(6) - Total subject facility cost represents the total cost to build the entire facility and it was determined based on data provide by the client
(7) - Total Tier IV equipment was determined by allocating the eligible TCEQ ECL part B equipment and their estimated cost from actual data provide by the client
(8) - Baseline heat rate was published by the Energy Information Administration ("EIA")
(9) - Baseline technology represents the technology that the subject would have replaced in the place of the subject's construction

Calpine
Brazos Valley
TCEQ Use Determination Application - 2008
Schedule 10
Tier IV

10. PROPERTY CATEGORIES AND COST

PROPERTY	PROJECT ID. NO.	IN SERVICE DATE	TAXABLE ON OR BEFORE 1/1/94? (Y / N)	TIER IV DECISION FLOW CHART BOX	ECL NUMBER	ESTIMATED PURCHASE COST	% EXEMPT	EXEMPT COST
Heat Recovery Steam Generators (HRSG)	1	2003	N	3	B-8	$ 39,913,424	100%	$ 39,913,424
Steam Turbine Systems	2	2003	N	3	B-10	$ 17,000,000	100%	$ 17,000,000
					Tier IV Total	$ 56,913,424		$ 56,913,424

TCEQ Docket Numbers
2008-0830-MIS-U (UD 07-11914/Tenaska Gateway Partners, Ltd – Rusk County)
2008-0831-MIS-U (UD 07-11966/Freestone Power Generation, L.P. – Freestone County)
2008-0832-MIS-U (UD 07-11971/Borger Energy Associates, L.P. – Hutchinson County)
2008-0849-MIS-U (UD 07-11969/Brazos Valley Energy, L.P. – Fort Bend County)
2008-0850-MIS-U (UD 07-11994/Freeport Energy Center, L.P. – Brazoria County)
2008-0851-MIS-U (UD 07-11926/Navasota Wharton Energy Partners, L.P. – Wharton County)

Appeal of Executive Director's Use	§	Before the
Determination Issue to	§	
Tenaska Gateway Partners, Ltd;	§	Texas Commission
Freestone Power Generation, L.P.;	§	
Borger Energy Associates, L.P.;	§	on
Brazos Valley Energy, L.P.;	§	
Freeport Energy Center, L.P.; and	§	
Navasota Wharton Energy Partners, L.P	§	Environmental Quality

Executive Director's Request for Remand of Applications Submitted by Tenaska Gateway Partners, Ltd; Freestone Power Generation, L.P.; Borger Energy Associates, L.P.; Brazos Valley Energy, L.P.; Freeport Energy Center, L.P.; and Navasota Wharton Energy Partners, L.P.

Pursuant to 30 TAC § 17.25(d), the Executive Director of the Texas Commission on Environmental Quality requests that the General Council remand the above listed applications for further processing.

Respectfully submitted,

Texas Commission on Environmental Quality

Zak Covar
Executive Director

Caroline Sweeney, Deputy Director
Office of Legal Services

Robert Martinez, Director
Environmental Law Division

Daniel Long

Daniel Long, Staff Attorney
Environmental Law Division
State Bar No. 24032679
P.O. Box 13087, MC 173
Austin, Texas 78711-3087
(512) 239-5373
(512) 239-0606

EXHIBIT 8

CERTIFICATE OF SERVICE

I certify that on June 18, 2012, the original and 7 copies of the Executive Director's Request for Remand of Applications Submitted by Tenaska Gateway Partners, Ltd; Freestone Power Generation, L.P.; Borger Energy Associates, L.P.; Brazos Valley Energy, L.P.; Freeport Energy Center, L.P.; and Navasota Wharton Energy Partners, L.P. was filed with the Office of the Chief Clerk, Texas Commission on Environmental Quality, and was served by first-class mail, agency mail, electronic mail, or facsimile to all persons on the attached mailing list.

Daniel Long

Daniel Long, Staff Attorney
Environmental Law Division
Texas Commission on Environmental Quality

Mailing List
TCEQ Docket Numbers
2008-0830-MIS-U (UD 07-11914/Tenaska Gateway Partners, Ltd – Rusk County)
2008-0831-MIS-U (UD 07-11966/Freestone Power Generation, L.P. – Freestone County)
2008-0832-MIS-U (UD 07-11971/Borger Energy Associates, L.P. – Hutchinson County)
2008-0849-MIS-U (UD 07-11969/Brazos Valley Energy, L.P. – Fort Bend County)
2008-0850-MIS-U (UD 07-11994/Freeport Energy Center, L.P. – Brazoria County)
2008-0851-MIS-U (UD 07-11926/Navasota Wharton Energy Partners, L.P. – Wharton County)

Appraisal Districts

Terry W. Decker, RRP/CTA/RTA
Chief Appraiser
Rusk County Appraisal District
P. O. Box 7
Henderson, Texas 75653-0007
903/657-3578 Fax 903/657-9073
tdecker@ ruskcad.org

Bud Black, RPA/CTA
Chief Appraiser
Freestone Central Appraisal District
218 North Mount Street
Fairfield, Texas 75840
903/389-5510 Fax 903/389-5955
general.info@freestoncad.org

Diana Hooks, RPA/RTA
Chief Appraiser
Hutchinson County Appraisal District
P. O. Box 5065
Borger, Texas 79008-5065
806/274-2294 Fax 806/273-3400
hcad3@amaonline.com

Glen Whitehead, RPA
Chief Appraiser
Fort Bend County Central Appraisal District
2801 B. F. Terry Blvd.
Rosenberg, Texas 77471-5600
281/344-8623 Fax 281/762-9666
Glenwhitehead@fbcad.org

Cheryl Evans
Chief Appraiser
Brazoria County Appraisal District
500 North Chenango Street
Angleton, Texas 77515
979/849-7792 Fax 979/849-7984
bcad@brazoriacad.org

Tylene Gamble
Chief Appraiser
Wharton County Appraisal District
308 East Milam Street
Wharton, Texas 77488-4918
979/532-8931 Fax 979/532-5691
whartoncad@sbcglobal.net

Pritchard & Abbott, Inc.
Attn: Mr. C. Wayne Frazell
4900 Overton Commons Court
Fort Worth, Texas 76132-3687
817/926-7861 Fax 817/927-5314
wfrazell@pandai.com

Applicants:

David D. Johnson
Tenaska Gateway Partners, Ltd.
1044 N 115th St. Suite 400
Omaha, Nebraska 68154-4446
402/691-9500 Fax 402/691-9226

Freestone Power Generation, L.P.
717 Texas, Suite 1000
Houston, Texas 77002

Borger Energy Associates, L.P.
7001 Boulevard 26, Suite 310
North Richland Hills, Texas 76180

Brazos Valley Energy, L.P.
717 Texas, Suite 1000
Houston, Texas 77002

Freeport Energy Center, L.P.
4100 Underwood Road
Pasadena, Texas 77507

Navasota Wharton Energy Partners LP
403 Corporate Woods
Magnolia, Texas 77354

Greg Maxim
Dennis Deegear
Duff & Phelps LLC
919 Congress Ave., Suite 1450
Austin, Texas 78701
512/671-5580 Fax 512/671-5501
gregory.maxim@duffandphelps.com
dennis.deegar@duffandphelps.com

Justin Hyland
Leo Scherrer
717 Texas Avenue
Houston, Texas 77002
713/830-8873 Fax 713/830-8670
hylandj@calpine.com
lscherrer@dow.com

Hugh L. Landrum & Associates
Attn: Mr. Hugh L. Landrum, Jr.
12621 Featherwood, Suite 325
Houston, Texas 77034
281/484-7000 Fax 281/484-7272
hughjr@hughlandrum.com

Commission:

Blas Coy
TCEQ Office of Public Interest Counsel (MC 103)
P. O. Box 13087
Austin, Texas 78711-3087
512/239-6363 Fax 512/239-6377

Docket Clerk
TCEQ Office of the Chief Clerk (MC 105)
P. O. Box 13087
Austin, Texas 78711-3087
512/239-3300 Fax 512/239-3311

TCEQ Docket No. 2012-1682-MIS-U

Hays Energy Reply Brief

EXHIBIT E

Buddy Garcia, *Chairman*
Larry R. Soward, *Commissioner*
Bryan W. Shaw, Ph.D., *Commissioner*
Glenn Shankle, *Executive Director*

TEXAS COMMISSION ON ENVIRONMENTAL QUALITY

Protecting Texas by Reducing and Preventing Pollution

USE DETERMINATION

The Texas Commission on Environmental Quality has reviewed Use Determination Application, 07-12001, filed by:

BASTROP ENERGY PARTNERS LP
BASTROP GENERATION PLANT
125 OLD BASTROP RD
CEDAR CREEK TX 78612

The pollution control property/project listed in the Use Determination Application is:

This facility has two combustion turbine generators coupled with two thermally efficient heat recovery steam generators (HRSGs) and one steam turbine. This application is a Tier IV application seeking a use determination for the HRSGs and the steam turbine. The application requests a Tier IV determination.

The outcome of the review is:

A 100% positive use determination for the two Heat Recovery Steam Generators. This equipment is considered to be pollution control equipment and was installed to meet or exceed federal or state regulations.

A negative determination is issued for the steam turbine. The use of the steam turbine does not provide an environmental benefit at the site. The steam turbine is not considered to be pollution control equipment.

Executive Director

May 1 2008
Date

Buddy Garcia, *Chairman*
Larry R. Soward, *Commissioner*
Bryan W. Shaw, Ph.D., *Commissioner*
Glenn Shankle, *Executive Director*

TEXAS COMMISSION ON ENVIRONMENTAL QUALITY

Protecting Texas by Reducing and Preventing Pollution

USE DETERMINATION

The Texas Commission on Environmental Quality has reviewed Use Determination Application, 07-11970, filed by:

BAYTOWN ENERGY CENTER LP
BAYTOWN ENERGY CENTER LP
8605 FM 1405 ROAD
BAYTOWN TX 77521

The pollution control property/project listed in the Use Determination Application is:

This facility has three thermally efficient heat recovery steam generators (HRSGs) and one steam turbine. This application is a Tier IV application seeking a partial use determination for the HRSGs and the enhanced steam turbines.

The outcome of the review is:

A 100% positive use determination for the three Heat Recovery Steam Generators. This equipment is considered to be pollution control equipment and was installed to meet or exceed federal or state regulations.

A negative determination is issued for the steam turbine. The use of the steam turbine does not provide an environmental benefit at the site. The steam turbine is not considered to be pollution control equipment.

Executive Director

May 1, 2008
Date

Buddy Garcia, *Chairman*
Larry R. Soward, *Commissioner*
Bryan W. Shaw, Ph.D., *Commissioner*
Glenn Shankle, *Executive Director*

TEXAS COMMISSION ON ENVIRONMENTAL QUALITY

Protecting Texas by Reducing and Preventing Pollution

USE DETERMINATION

The Texas Commission on Environmental Quality has reviewed Use Determination Application, 07-11965, filed by:

CALPINE CORPORATION
CALPINE MAGIC VALLEY GENERATION
3333 N MCOLL RD
EDINBURG TX 78539

The pollution control property/project listed in the Use Determination Application is:

This facility has two thermally efficient heat recovery steam generators (HRSGs) and one steam turbine. This application is a Tier IV application seeking a partial use determination for the HRSGs and the enhanced steam turbines.

The outcome of the review is:

A 100% positive use determination for the two Heat Recovery Steam Generators. This equipment is considered to be pollution control equipment and was installed to meet or exceed federal or state regulations.

A negative determination is issued for the steam turbine. The use of the steam turbine does not provide an environmental benefit at the site. The steam turbine is not considered to be pollution control equipment.

Executive Director

May 1 2008
Date

Buddy Garcia, *Chairman*
Larry R. Soward, *Commissioner*
Bryan W. Shaw, Ph.D., *Commissioner*
Glenn Shankle, *Executive Director*

TEXAS COMMISSION ON ENVIRONMENTAL QUALITY

Protecting Texas by Reducing and Preventing Pollution

USE DETERMINATION

The Texas Commission on Environmental Quality has reviewed Use Determination Application, 07-12016, filed by:

CHANNEL ENERGY CENTER LP
CHANNEL ENERGY CENTER LP
12000 LAWNDALE LCR GT 5
PASADENA TX 77017

The pollution control property/project listed in the Use Determination Application is:

This facility has two thermally efficient heat recovery steam generators (HRSGs) and one steam turbine. This application is a Tier IV application seeking a partial use determination for the HRSGs and the enhanced steam turbine.

The outcome of the review is:

A 100% positive use determination for the two Heat Recovery Steam Generators. This equipment is considered to be pollution control equipment and was installed to meet or exceed federal or state regulations.

A negative determination is issued for the steam turbine. The use of the steam turbine does not provide an environmental benefit at the site. The steam turbine is not considered to be pollution control equipment.

Executive Director

May 1 2008
Date

Buddy Garcia, *Chairman*
Larry R. Soward, *Commissioner*
Bryan W. Shaw, Ph.D., *Commissioner*
Glenn Shankle, *Executive Director*

TEXAS COMMISSION ON ENVIRONMENTAL QUALITY

Protecting Texas by Reducing and Preventing Pollution

USE DETERMINATION

The Texas Commission on Environmental Quality has reviewed Use Determination Application 07-11968, filed by:

CORPUS CHRISTI COGENERATION LP
CORPUS CHRISTI COGENERATION
3952 BUDDY LAWRENCE DR
CORPUS CHRISTI TX 78407

The pollution control property/project listed in the Use Determination Application is:

This facility has two thermally efficient heat recovery steam generators (HRSGs) and one steam turbine. This application is a Tier IV application seeking a partial use determination for the HRSGs and the enhanced steam turbines.

The outcome of the review is:

A 100% positive use determination for the two Heat Recovery Steam Generators. This equipment is considered to be pollution control equipment and was installed to meet or exceed federal or state regulations.

A negative determination is issued for the steam turbine. The use of the steam turbine does not provide an environmental benefit at the site. The steam turbine is not considered to be pollution control equipment.

Executive Director

May 2, 2008
Date

Buddy Garcia, *Chairman*
Larry R. Soward, *Commissioner*
Bryan W. Shaw, Ph.D., *Commissioner*
Glenn Shankle, *Executive Director*

TEXAS COMMISSION ON ENVIRONMENTAL QUALITY

Protecting Texas by Reducing and Preventing Pollution

USE DETERMINATION

The Texas Commission on Environmental Quality has reviewed Use Determination Application, 07-11967, filed by:

DEER PARK ENERGY CENTER LP
DEER PARK ENERGY CENTER
5665 HWY 225
HOUSTON TX 77536

The pollution control property/project listed in the Use Determination Application is:

This facility has four thermally efficient heat recovery steam generators (HRSGs) and one steam turbine. This application is a Tier IV application seeking a partial use determination for the HRSGs and the enhanced steam turbines.

The outcome of the review is:

A 100% positive use determination for the four Heat Recovery Steam Generators. This equipment is considered to be pollution control equipment and was installed to meet or exceed federal or state regulations.

A negative determination is issued for the steam turbine. The use of the steam turbine does not provide an environmental benefit at the site. The steam turbine is not considered to be pollution control equipment.

Executive Director

Date

Buddy Garcia, *Chairman*
Larry R. Soward, *Commissioner*
Bryan W. Shaw, Ph.D., *Commissioner*
Glenn Shankle, *Executive Director*

TEXAS COMMISSION ON ENVIRONMENTAL QUALITY

Protecting Texas by Reducing and Preventing Pollution

USE DETERMINATION

The Texas Commission on Environmental Quality has reviewed Use Determination Application, 07-11916, filed by:

FPLE FORNEY LP
FPLE FORNEY POWER PLANT
900 W BROAD ST
FORNEY TX 75126

The pollution control property/project listed in the Use Determination Application is:

This facility has six thermally efficient heat recovery steam generators (HRSGs) and two enhanced steam turbines. This application is a Tier IV application seeking a partial use determination for the HRSGs and the enhanced steam turbines.

The outcome of the review is:

A 100% positive use determination for the six Heat Recovery Steam Generators. This equipment is considered to be pollution control equipment and was installed to meet or exceed federal or state regulations.

A negative determination is issued for the two steam turbines. The use of the steam turbines does not provide an environmental benefit at the site. The steam turbines are not considered to be pollution control equipment.

Executive Director

May 1, 2008
Date

Buddy Garcia, *Chairman*
Larry R. Soward, *Commissioner*
Bryan W. Shaw, Ph.D., *Commissioner*
Glenn Shankle, *Executive Director*

TEXAS COMMISSION ON ENVIRONMENTAL QUALITY

Protecting Texas by Reducing and Preventing Pollution

USE DETERMINATION

The Texas Commission on Environmental Quality has reviewed Use Determination Application, 07-12000, filed by:

FRONTERA GENERATION LTP
FRONTERA GENERATION PLANT
320 S GOODWIN RD
MISSION TX 78572

The pollution control property/project listed in the Use Determination Application is:

This facility has two combustion turbine generators coupled with two thermally efficient heat recovery steam generators (HRSGs) and one steam turbine. This application is a Tier IV application seeking a partial use determination for the three HRSGs and the enhanced steam turbines.

The outcome of the review is:

A 100% positive use determination for the two Heat Recovery Steam Generators. This equipment is considered to be pollution control equipment and was installed to meet or exceed federal or state regulations.

A negative determination is issued for the steam turbine. The use of the steam turbine does not provide an environmental benefit at the site. The steam turbine is not considered to be pollution control equipment.

Executive Director

May 1, 2008
Date

Buddy Garcia, *Chairman*
Larry R. Soward, *Commissioner*
Bryan W. Shaw, Ph.D., *Commissioner*
Glenn Shankle, *Executive Director*

TEXAS COMMISSION ON ENVIRONMENTAL QUALITY

Protecting Texas by Reducing and Preventing Pollution

USE DETERMINATION

The Texas Commission on Environmental Quality has reviewed Use Determination Application, 07-11964, filed by:

GENTEX POWER CORPORATION
LOST PINES
HWY 21 NE 4.5 MI
BASTROP TX 78602

The pollution control property/project listed in the Use Determination Application is:

This facility has two thermally efficient heat recovery steam generators (HRSGs) and one steam turbine. This application is a Tier IV application seeking a partial use determination for the HRSGs and the enhanced steam turbines.

The outcome of the review is:

A 100% positive use determination for the two Heat Recovery Steam Generators. This equipment is considered to be pollution control equipment and was installed to meet or exceed federal or state regulations.

A negative determination is issued for the steam turbine. The use of the steam turbine does not provide an environmental benefit at the site. The steam turbine is not considered to be pollution control equipment.

Executive Director

May 1, 2008
Date

Buddy Garcia, *Chairman*
Larry R. Soward, *Commissioner*
Bryan W. Shaw, Ph.D., *Commissioner*
Glenn Shankle, *Executive Director*

TEXAS COMMISSION ON ENVIRONMENTAL QUALITY

Protecting Texas by Reducing and Preventing Pollution

USE DETERMINATION

The Texas Commission on Environmental Quality has reviewed Use Determination Application, 07-11972, filed by:

GS ELECTRICAL GENERATING COOP & DENVER
MUSTANG STATION UNITS 1, 2, & 3
1937 CR 390
DENVER CITY TX 79323

The pollution control property/project listed in the Use Determination Application is:

This facility has two thermally efficient heat recovery steam generators (HRSGs) and one steam turbine. This application is a Tier IV application seeking a partial use determination for the HRSGs and the enhanced steam turbines.

The outcome of the review is:

A 100% positive use determination for the two Heat Recovery Steam Generators. This equipment is considered to be pollution control equipment and was installed to meet or exceed federal or state regulations.

A negative determination is issued for the steam turbine. The use of the steam turbine does not provide an environmental benefit at the site. The steam turbine is not considered to be pollution control equipment.

Executive Director

May 1, 2008
Date

Buddy Garcia, *Chairman*
Larry R. Soward, *Commissioner*
Bryan W. Shaw, Ph.D., *Commissioner*
Glenn Shankle, *Executive Director*

TEXAS COMMISSION ON ENVIRONMENTAL QUALITY

Protecting Texas by Reducing and Preventing Pollution

USE DETERMINATION

The Texas Commission on Environmental Quality has reviewed Use Determination Application, **07-11943**, filed by:

GUADALUPE POWER PARTNERS LP
GUADALUPE POWER PARTNERS
5740 WEIL RD
MARION TX 78124

The pollution control property/project listed in the Use Determination Application is:

This facility has four combustion turbine generators coupled with four thermally efficient heat recovery steam generators (HRSGs) and one steam turbine. This application is a Tier IV application seeking a partial use determination for the HRSGs and the enhanced steam turbines.

The outcome of the review is:

A 100% positive use determination for the four Heat Recovery Steam Generators. This equipment is considered to be pollution control equipment and was installed to meet or exceed federal or state regulations.

A negative determination is issued for the steam turbine. The use of the steam turbine does not provide an environmental benefit at the site. The steam turbine is not considered to be pollution control equipment.

Executive Director

Date: 2008

Buddy Garcia, *Chairman*
Larry R. Soward, *Commissioner*
Bryan W. Shaw, Ph.D., *Commissioner*
Glenn Shankle, *Executive Director*

TEXAS COMMISSION ON ENVIRONMENTAL QUALITY

Protecting Texas by Reducing and Preventing Pollution

USE DETERMINATION

The Texas Commission on Environmental Quality has reviewed Use Determination Application, 07-11917, filed by:

LAMAR POWER PARTNERS
FPLE PARIS POWER PLANT
HWY 137 1 MI S OF 286
PARIS TX 75461

The pollution control property/project listed in the Use Determination Application is:

This facility has four thermally efficient heat recovery steam generators (HRSGs) and two enhanced steam turbines. This application is a Tier IV application seeking a partial use determination for the HRSGs and the enhanced steam turbines.

The outcome of the review is:

A 100% positive use determination for the four Heat Recovery Steam Generators. This equipment is considered to be pollution control equipment and was installed to meet or exceed federal or state regulations.

A negative determination is issued for the two steam turbines. The use of the steam turbines does not provide an environmental benefit at the site. The steam turbines are not considered to be pollution control equipment.

Executive Director

Nov 1 2008
Date

Buddy Garcia, *Chairman*
Larry R. Soward, *Commissioner*
Bryan W. Shaw, Ph.D., *Commissioner*
Glenn Shankle, *Executive Director*

TEXAS COMMISSION ON ENVIRONMENTAL QUALITY

Protecting Texas by Reducing and Preventing Pollution

USE DETERMINATION

The Texas Commission on Environmental Quality has reviewed Use Determination Application; 07-11927, filed by:

NAVASOTA ODESSA ENERGY PARTNERS LP
QUAIL RUN
2950 E INTERSTATE 20
ODESSA TX 79766

The pollution control property/project listed in the Use Determination Application is:

This facility has four thermally efficient heat recovery steam generators (HRSGs) and two steam turbines. This application is a Tier IV application seeking a partial use determination for the HRSGs and the enhanced steam turbines.

The outcome of the review is:

A 100% positive use determination for the four Heat Recovery Steam Generators. This equipment is considered to be pollution control equipment and was installed to meet or exceed federal or state regulations.

A negative determination is issued for the two steam turbines. The use of the steam turbines does not provide an environmental benefit at the site. The steam turbines are not considered to be pollution control equipment.

Executive Director

Date

Buddy Garcia, *Chairman*
Larry R. Soward, *Commissioner*
Bryan W. Shaw, Ph.D., *Commissioner*
Glenn Shankle, *Executive Director*

TEXAS COMMISSION ON ENVIRONMENTAL QUALITY

Protecting Texas by Reducing and Preventing Pollution

USE DETERMINATION

The Texas Commission on Environmental Quality has reviewed Use Determination Application, 07-12003, filed by:

NRG TEXAS POWER LLC
CEDAR BAYOU IV
7705 OLD WEST BAY RD
BAYTOWN TX 77520

The pollution control property/project listed in the Use Determination Application is:

This facility has combustion turbine generators coupled with thermally efficient heat recovery steam generators (HRSGs) and steam turbines. This application is a Tier IV application seeking a use determination for the HRSGs and the steam turbine. The application requests a Tier IV determination.

The outcome of the review is:

A 100% positive use determination for the Heat Recovery Steam Generators. This equipment is considered to be pollution control equipment and was installed to meet or exceed federal or state regulations.

A negative determination is issued for the steam turbines. The use of the steam turbines does not provide an environmental benefit at the site. The steam turbines are not considered to be pollution control equipment.

Executive Director

May 1 2008
Date

Buddy Garcia, *Chairman*
Larry R. Soward, *Commissioner*
Bryan W. Shaw, Ph.D., *Commissioner*
Glenn Shankle, *Executive Director*

TEXAS COMMISSION ON ENVIRONMENTAL QUALITY

Protecting Texas by Reducing and Preventing Pollution

USE DETERMINATION

The Texas Commission on Environmental Quality has reviewed Use Determination Application, 07-12005, filed by:

NRG TEXAS POWER LLC
TH WHARTON
16301 SH 249
HOUSTON TX 77064

The pollution control property/project listed in the Use Determination Application is:

This facility has combustion turbine generators coupled with thermally efficient heat recovery steam generators (HRSGs). This application is a Tier IV application seeking a use determination for the HRSGs. The application requests a Tier IV determination.

The outcome of the review is:

A 100% positive use determination for the Heat Recovery Steam Generators. This equipment is considered to be pollution control equipment and was installed to meet or exceed federal or state regulations.

Executive Director

May 2, 2008
Date

Buddy Garcia, *Chairman*
Larry R. Soward, *Commissioner*
Bryan W. Shaw, Ph.D., *Commissioner*
Glenn Shankle, *Executive Director*

TEXAS COMMISSION ON ENVIRONMENTAL QUALITY

Protecting Texas by Reducing and Preventing Pollution

USE DETERMINATION

The Texas Commission on Environmental Quality has reviewed Use Determination Application, 07-11942, filed by:

ODESSA-ECTOR POWER PARTNERS
ODESSA-ECTOR POWER PARTNERS
2200 E I-20 SERVICE RD S
ODESSA TX 79766

The pollution control property/project listed in the Use Determination Application is:

This facility has four combustion turbine generators coupled with four thermally efficient heat recovery steam generators (HRSGs) and one steam turbine. This application is a Tier IV application seeking a partial use determination for the HRSGs and the enhanced steam turbines.

The outcome of the review is:

A 100% positive use determination for the four Heat Recovery Steam Generators. This equipment is considered to be pollution control equipment and was installed to meet or exceed federal or state regulations.

A negative determination is issued for the steam turbine. The use of the steam turbine does not provide an environmental benefit at the site. The steam turbine is not considered to be pollution control equipment.

Executive Director

Date

Buddy Garcia, *Chairman*
Larry R. Soward, *Commissioner*
Bryan W. Shaw, Ph.D., *Commissioner*
Glenn Shankle, *Executive Director*

TEXAS COMMISSION ON ENVIRONMENTAL QUALITY

Protecting Texas by Reducing and Preventing Pollution

USE DETERMINATION

The Texas Commission on Environmental Quality has reviewed Use Determination Application, 07-12015, filed by:

PASADENA COGENERATION
PASADENA COGENERATION I & II
955 PHILLIPS RD
PASADENA TX 77506

The pollution control property/project listed in the Use Determination Application is:

This facility has three thermally efficient heat recovery steam generators (HRSGs) and one steam turbine. This application is a Tier IV application seeking a partial use determination for the HRSGs and the enhanced steam turbine.

The outcome of the review is:

A 100% positive use determination for the three Heat Recovery Steam Generators. This equipment is considered to be pollution control equipment and was installed to meet or exceed federal or state regulations.

A negative determination is issued for the steam turbine. The use of the steam turbine does not provide an environmental benefit at the site. The steam turbine is not considered to be pollution control equipment.

Executive Director

May 1 2008
Date

Buddy Garcia, *Chairman*
Larry R. Soward, *Commissioner*
Bryan W. Shaw, Ph.D., *Commissioner*
Glenn Shankle, *Executive Director*

TEXAS COMMISSION ON ENVIRONMENTAL QUALITY

Protecting Texas by Reducing and Preventing Pollution

USE DETERMINATION

The Texas Commission on Environmental Quality has reviewed Use Determination Application, 07-11921, filed by:

RIO NOGALES POWER PROJECT LP
RIO NOGALES POWER PROJECT
711 RIO NOGALES DR
SEGUIN TX 78155

The pollution control property/project listed in the Use Determination Application is:

This facility has three combustion turbine generators coupled with three thermally efficient heat recovery steam generators (HRSGs) and one steam turbine. This application is a Tier IV application seeking a partial use determination for the three HRSGs and the enhanced steam turbines.

The outcome of the review is:

A 100% positive use determination for the three Heat Recovery Steam Generators. This equipment is considered to be pollution control equipment and was installed to meet or exceed federal or state regulations.

A negative determination is issued for the steam turbine. The use of the steam turbine does not provide no environmental benefit at the site. The steam turbine is not considered to be pollution control equipment.

Executive Director

May 1 2008
Date

Buddy Garcia, *Chairman*
Larry R. Soward, *Commissioner*
Bryan W. Shaw, Ph.D., *Commissioner*
Glenn Shankle, *Executive Director*

TEXAS COMMISSION ON ENVIRONMENTAL QUALITY

Protecting Texas by Reducing and Preventing Pollution

USE DETERMINATION

The Texas Commission on Environmental Quality has reviewed Use Determination Application. 07-11915, filed by:

TENSKA FRONTIER PARTNERS LTD
TENASKA FRONTIER GENERATION STAT
17500 HWY 30
SHIRO TX 77876

The pollution control property/project listed in the Use Determination Application is:

This facility has three combustion turbine generators coupled with three thermally efficient heat recovery steam generators (HRSGs) and one enhanced steam turbine. This application is a Tier IV application seeking a partial use determination for the HRSGs and the enhanced steam turbines.

The outcome of the review is:

A 100% positive use determination for the three Heat Recovery Steam Generators. This equipment is considered to be pollution control equipment and was installed to meet or exceed federal or state regulations.

A negative determination is issued for the steam turbine. The use of the steam turbine does not provide an environmental benefit at the site. The steam turbine is not considered to be pollution control equipment.

Executive Director

May 2 2008
Date

TCEQ Docket No. 2012-1682-MIS-U

Hays Energy Reply Brief

EXHIBIT F

Bryan W. Shaw, Ph.D., *Chairman*
Carlos Rubinstein, *Commissioner*
Toby Baker, *Commissioner*
Zak Covar, *Executive Director*

TEXAS COMMISSION ON ENVIRONMENTAL QUALITY

Protecting Texas by Reducing and Preventing Pollution

July 10, 2012

Mr. Greg Odell
Agent
Ryan, Inc.
12th Floor LB 72
13155 Noel Rd
Dallas, Texas 75240

Re: Notice of Negative Use Determination
Hays Energy Limited Partnership
Hays Energy, LP
1601 Francis Harris Lane
San Marcos (Hays County)
Application Number: 12272

Dear Mr. Odell:

This letter responds to Hays Energy Limited Partnership's Application for Use Determination, received April 29, 2008, pursuant to the Texas Commission on Environmental Quality's (TCEQ) Tax Relief for Pollution Control Property Program for the Hays Energy, LP.

The TCEQ has completed the review for application #12272 and has issued a Negative Use Determination for the property in accordance with Title 30 Texas Administrative Code (TAC) §17.4 and §17.6. Heat recovery steam generators and steam turbines are used solely for production; therefore, are not eligible for a positive use determination.

Please be advised that a Negative Use Determination may be appealed. The appeal must be filed with the TCEQ Chief Clerk within 20 days after the receipt of this letter in accordance with 30 TAC §17.25.

If you have questions regarding this letter or need further assistance, please contact Ronald Hatlett of the Tax Relief for Pollution Control Property Program by telephone at (512) 239-6348, by e-mail at ronald.hatlett@tceq.texas.gov, or write to the Texas Commission on Environmental Quality, Tax Relief for Pollution Control Property Program, MC-110, P.O. Box 13087, Austin, Texas 78711-3087.

Sincerely,

cgoodin

Chance Goodin, Team Leader
Stationary Source Programs
Air Quality Division

CG/RH

cc: Chief Appraiser, Hays County Appraisal District, 21001 North IH 35, Kyle, Texas 78640