TEXAS AIR CONTROL BOARD
SAMPLING PROCEDURES MANUAL
JANUARY 1983

REVISION DATE	AFFECTED PAGES
July 1985	i, iii, iv, v, vi, vii, viii, 1-1, 1-2, 1-3, 2-1, 2-2, 2-3, 2-5, 2-6, 2-7, 2-8, 2-9, 3-1, 4-1, 4-2, 4-3, 4-10, 5-3, 6-2, 8-2, 8-3, 8-5, 11-3, C-3, C-5, C-6, C-7, D-2, D-9, D-10, D-23, D-36, H-2, M-1, M-2

TABLE OF CONTENTS

INTRODUCTION..... ix

CHAPTER 1 - SAMPLING OVERVIEW

General..... 1-1
Stack Sampling..... 1-1
Ground Level Sampling..... 1-2
Continuous Emission Monitoring Systems..... 1-2
Visible Emissions Evaluation..... 1-2
Certification of Visible Emissions Evaluators..... 1-3
Observation of Sampling and Analysis..... 1-3

CHAPTER 2 - STACK SAMPLING FACILITIES

General..... 2-1
Physical Features..... 2-1
Sampling Ports..... 2-1
Port Location..... 2-1
Port Size..... 2-2
Port Installation..... 2-2
Number and Location of Ports
Circular Stacks..... 2-2
Non-Circular Stacks..... 2-3
Monorail Support Structure..... 2-3
Port or Monorail Support Loading..... 2-3
Work Platform..... 2-5
Clearance Zone..... 2-5
Power Supply..... 2-5
Platform..... 2-7
Stack Base..... 2-7
Vehicle Access and Parking..... 2-7
Gaseous Sampling - Concentration Only..... 2-7
Permanent Monorail Systems..... 2-7
Miscellaneous Requirements..... 2-8
Excess Air..... 2-8
Cyclonic Flow..... 2-8

CHAPTER 3 - STACK SAMPLING EQUIPMENT

Sampling Apparatus..... 3-1
Velocity Measuring Devices..... 3-3
Temperature and Pressure Measuring Devices..... 3-3
Portable Barometers..... 3-3

CHAPTER 4 - STACK SAMPLING PRELIMINARY PROCEDURES

General..... 4-1
Number and Location of Sampling Points..... 4-1

Pressure and Temperature Measurements..... 4-5
Probe Marking..... 4-5
Stack Gas Moisture Content..... 4-5
Condenser Method..... 4-7
Saturated Conditions..... 4-7
Molecular Weight of Stack Gas..... 4-8
Velocity Determination..... 4-8
Initial Sampling Parameters..... 4-11
Isokinetic Sampling..... 4-11
Proportional Sampling..... 4-13
Nomographs..... 4-13

CHAPTER 5 - STACK SAMPLING FOR PARTICULATE MATTER

Isokinetic Sampling..... 5-1
Sampling for Pollutant Gases..... 5-3
General Sampling Procedures..... 5-3
Sample Path..... 5-3
Sampling Preparations..... 5-3
Operating Conditions..... 5-4
Leak Check Procedures..... 5-4
Sampling..... 5-6
Sample Recovery..... 5-7
Summary for Usual Criteria for Isokinetic Sampling..... 5-9
Impinger Trains 5-9
Particulate Matter Only..... 5-9
Particulate Matter and Sulfur Dioxide..... 5-10
Particulate Matter in the Presence of HF..... 5-10
Particulate Matter and Chlorine and/or Chlorides..... 5-10
Particulate Matter and Ammonia..... 5-11
Particulate Matter and Hydrogen Sulfide..... 5-11
Sulfuric Acid Mist..... 5-11
Fluidized Catalytic Cracking Units (FCCUs)..... 5-12

CHAPTER 6 - STACK SAMPLING FOR GASEOUS POLLUTANTS

General..... 6-1
Apparatus..... 6-1
General Procedures..... 6-2
Impinger Trains 6-4
Sulfur Dioxide (SO_2)..... 6-4
Shell Method (Alternate)..... 6-5
Monsanto Company Method (Alternate)..... 6-5
SO_2 Continuous Monitoring (Alternate)..... 6-5
Hydrogen Sulfide (H_2S)..... 6-5
Hydrogen Fluoride (HF)..... 6-6
Hydrogen Cyanide Gas..... 6-6
Summary of Usual Criteria for Gaseous Sampling..... 6-7
Nitrogen Oxides (NO_x)..... 6-7
Standard Method..... 6-7
Apparatus..... 6-8
Sampling Procedure..... 6-11

CHAPTER 7 - INSTRUMENTAL FIELD SAMPLING

In Preparation..... 7-1

CHAPTER 8 - DATA REDUCTION

Overview..... 8-1
Allowable Emission Rates..... 8-1
Data Reduction References..... 8-1
Stack Sampling Data Reduction..... 8-1
Moisture Fraction..... 8-1
Orsat Correction and Molecular Weight..... 8-2
Flow Rate..... 8-2
Nozzle Volume..... 8-3
Isokinetic Pollutant Mass Rate..... 8-3
Isokinetic Check..... 8-5
Gaseous Pollutant Mass Rate..... 8-5
Averaging Results..... 8-6
Multiple Sources Vented Through One Stack..... 8-6
Multiple Stacks from One Process..... 8-7
Ground Level Sampling Data Reduction..... 8-8

CHAPTER 9 - GROUND LEVEL SAMPLING EQUIPMENT

General..... 9-1
Particulate Matter Sampling Equipment..... 9-1
High Volume Air Sampler (Hi-Vol)..... 9-1
Filters..... 9-3
Gaseous Sampling Equipment..... 9-3

CHAPTER 10 - GROUND LEVEL SAMPLING PRELIMINARY PROCEDURES

General..... 10-1
Site Selection..... 10-1
Weather..... 10-2
Plant Operation..... 10-2

CHAPTER 11 - GROUND LEVEL SAMPLING FOR PARTICULATE MATTER

General..... 11-1
Preparation..... 11-1
Sampling Procedure..... 11-1
Sample Completion..... 11-3
Other Analyses..... 11-3

CHAPTER 12 - GROUND LEVEL SAMPLING FOR GASES

General..... 12-1
Determination of Sulfur Dioxide (SO_2)..... 12-1
Determination of Hydrogen Sulfide (H_2S)..... 12-2
Molybdenum Blue Method..... 12-2

Determination of Nitrogen Dioxide (NO_2)..... 12-2
Modified Christie Method..... 12-2
Interferences..... 12-2
Determination of Ammonia (NH_3)..... 12-3
Phenol-Nitroprusside Method..... 12-3
Interferences..... 12-3
Determination of Chlorine and/or Chlorides..... 12-3
Turbidimetric Method..... 12-3
Gaseous Chloride (HCl)..... 12-3
Free Chlorine (CL_2)..... 12-3
Interferences..... 12-3
Determination of Fluorides..... 12-4
General..... 12-4
Treated Filter Method..... 12-4
Impinger Method..... 12-5
Vegetation Sampling..... 12-5

CHAPTER 13 - VISIBLE EMISSIONS EVALUATION

General..... 13-1
Procedures for Visible Emission Evaluation..... 13-1
Optical Transmissometers for Visible Emissions Evaluation..... 13-2
Lidar..... 13-3
Visible Emissions Training and Certification..... 13-3

CHAPTER 14 - CONTENTS OF SAMPLING REPORTS

General..... 14-1
Stack Sampling..... 14-1
Ground Level Sampling..... 14-4
Continuous Emission Monitoring..... 14-6
Instrumental Field Sampling..... 14-6

CHAPTER 15 - CONTINUOUS MONITORING

In Preparation..... 15-1

APPENDIX A - RESERVED

APPENDIX B - CALIBRATION OF STACK SAMPLING EQUIPMENT

General..... B-1
Frequency of Calibration..... B-1
Calibration of Dry Gas Meters..... B-1
General..... B-1
Calibration of Dry Gas Meters with the Spirometer..... B-1
Dry Gas Meter Calibration Check with Standardized Dry Gas Meter..... B-3
Calibration of Orifice Meter..... B-5
Calibration of Barometers..... B-6

Calibration of Temperature Indicators..... B-6
Pitot Tube Calibration or Measurement..... B-7
General..... B-7
Frequency of Calibration..... B-7
Assignment of Baseline Coefficient..... B-7
Calibration in Wind Tunnel..... B-7
Measurement of Nozzles..... B-9

APPENDIX C - CALIBRATION OF GROUND LEVEL SAMPLING EQUIPMENT

General..... C-1
Frequency of Calibration..... C-1
High Volume Air Sampler Calibration..... C-1
Equipment..... C-1
Orifice Calibration Units (OCU)..... C-2
Types of Flow Measurement..... C-2
Calibration Procedures - Hi-Vol..... C-2
Calibration Procedures - Orifice Calibration Unit..... C-5
Gaseous Sampler Calibration..... C-8
Calibration Procedure..... C-8
Calibration of Mass Flowmeter with Spirometer..... C-10
Proceedure..... C-10

APPENDIX D - FORMS

Determination of Minimum Number of Traverse Points..... D-1
Traverse Points Layout for Circular Stacks..... D-2
Record of Preliminary Information..... D-4
Preliminary Moisture Determination..... D-5
Preliminary Orsat Analysis Results..... D-6
Preliminary Molecular Weight Calculations..... D-6
Preliminary Velocity Determination..... D-7
Nozzle and K Determination..... D-8
Stack Sampling Field Data..... D-9
Impinger Catch..... D-10
Field Check of Molecular Weight..... D-11
Field Check of Moisture Fraction..... D-11
Field Check of Percent Isokinetic..... D-12
Plant Operational Status Form..... D-13
Record of ΔPs for Proportional Sampling..... D-14
Laboratory Request and Chain of Custody..... D-15
Field Data Sheet for SRU Tail Gas Sample..... D-16
Data Required for SRU Excess Air Calculations..... D-17
Cyclonic Flow Computer Input ΔP Values..... D-18
Cyclonic Flow Record of Angles and Sample Times..... D-19
Quality Assurance Check List..... D-20
Check List for Stack Sampling..... D-21
Calibration of Dry Gas Meter by Spirometer..... D-22
Console Dry Gas Meter Calibration Check..... D-23
Procedures for Pitot Tube Inspection..... D-25
Pitot Tube Inspection Data Sheet..... D-26

Instructions for Pitot Tube Inspection Data Sheet..... D-27
Nozzle Inspection and Measurement Data Sheet..... D-28
Portable Barometer Calibration Form..... D-29
Field Data for Ground Level Sampling..... D-30
Data Reduction for Ground Level Sampling..... D-32
Field Data Sheet for NO_x Concentration..... D-34
Orifice Calibration Worksheet..... D-35
Actual Roots Meter Flow Rate vs Orifice Manometer..... D-36
Hi-Vol Calibration Worksheet..... D-37
Corrected Hi-Vol Flow Rate vs Hi-Vol Indicator..... D-38
Calibration of a Telmatic Rotameter..... D-39
Vegetation Sampling Field Information Form..... D-40
Visual Emission Observation Form..... D-41

APPENDIX E - RESERVED

APPENDIX F - ORSAT ANALYSIS

General..... F-1
Reagents and Auxilliary Solutions..... F-1
Maintenance, Pitfalls, and Replenishment..... F-2
General Remarks on Operation..... F-4

APPENDIX G - EMISSION PEAKS IN STACK SAMPLES

General..... G-1
Single Type Occurrences..... G-1
Multiple Type Occurrences..... G-2

APPENDIX H - STACK SAMPLING CYCLONIC FLOW

General..... H-1
Accuracy Considerations..... H-1
Determining Cyclonic Flow..... H-2
Sampling Procedure..... H-3
Preliminary Velocity Traverse and Calculations..... H-3
Sampling..... H-3
Data Reduction..... H-4

APPENDIX I - CORRECTIONS FOR EXCESS AIR AND EXCESS O_2

General..... I-1
Special Cases..... I-2
Excess Air Estimations..... I-2

APPENDIX J - VOC SAMPLING REFERENCES AND METHODS

VOC Sampling References..... J-1
VOC Sampling Methods (in preparation)..... J-2

APPENDIX K - RESERVED

APPENDIX L - F FACTORS

General..... L-1
Use of F Factors..... L-1
Special Considerations..... L-2
Values of F Factors..... L-3
Calculation of F Factors..... L-4

APPENDIX M - FLUIDIZED CATALYTIC CRACKING UNIT SAMPLING

General..... M-1
Applicable Regulations..... M-1
TACB Regulation I and TACB Permits..... M-1
New Source Performance Standards (NSPS)..... M-1
Other Regulations or Standards..... M-2
Sampling..... M-2
Analysis..... M-2

INTRODUCTION

The Sampling Procedures Manual has been prepared with the intent of providing standard procedures for sampling and associated activities such as calibration, data reduction, and report preparation. Standard procedures are necessary since variations in procedures can produce varying results and preclude the uniform administration of rules and regulations.

The procedures described are used by the Texas Air Control Board (TACB) and should normally be used for all sampling submitted to the agency unless different procedures are prescribed by other regulations such as EPA New Source Performance Standards. Any deviation from applicable procedures should have advance approval. Test reports are subject to detailed review.

The use of brand or trade names is done for convenience only and does not constitute endorsement. In anticipation of the adoption of the metric system, equations written in English units are followed by the same equations in metric units (metric mnemonics are denoted by a prime mark).

This Sampling Procedures Manual is maintained through updates and periodic revisions sent out according to the current mailing list. Each user of the manual should insure that the current version is used. Users of this manual are encouraged to forward comments, suggestions, alternate methods, and corrections.

CHAPTER 1

SAMPLING OVERVIEW

General

Source testing includes stack sampling, ground level sampling, visible emissions determination, and other tests that are designed to evaluate emissions. Procedures and techniques concerning various aspects of source sampling are described in this manual including guidelines for construction of sampling facilities, for data reduction, and for content of sampling reports. The standard sampling methods are described and certain alternate methods are outlined.

Although standard sampling methods are preferred, instances may occur in which sampling is necessary but no standard procedure is described. In such cases, specific method proposals should be submitted for review and approval on a case-by-case basis. Previous approval by other regulatory authorities does not guarantee acceptance by the TACB, but may support the consideration of an alternate method.

Sampling equipment and techniques are described; however, analytical procedures are not included except where they are inherent in the sampling method. A separate manual entitled Laboratory Methods for Determination of Air Pollutants is available from the Sampling and Analysis Division of the TACB. Subsequent references to the laboratory manual refer to that document.

Other chapters of this manual detail the requirements for reporting sampling results. Contents of sampling reports are described and forms for field data and calibrations are provided. Test reports are subject to detailed review.

Stack Sampling

Stack sampling encompasses several different methods of removing and analyzing representative samples from stacks, ducts, or flues. Even though collection is more involved, stack sampling has advantages over other methods such as elimination of sample dilution due to atmospheric dispersion, interference from nearby sources and/or natural background concentrations, etc.

The portion of a sample caught in the impinger section of the sampling train (particulate matter and condensibles) must always be analyzed and reported. This portion is always included in emission rate calculations for which applicable regulations consider total release of air contaminants (e.g. TACB Regulations).

If one source exhausts through multiple stacks or multiple sources exhaust through a common stack, special considerations are necessary to insure equitable and accurate application of the Regulations. Examples of these special cases are discussed in detail in Chapter 8.

Intermittent periods of stack emissions such as soot blowing or grate cleaning that are higher than normal emissions and are not conditions of upset must be included in sampling operations. See Appendix G for details.

Production rates or operating conditions during sampling should be either normal levels or levels which will not be exceeded. Retesting may be required for future operation at levels above the average level during sampling. Details are provided in Chapter 5.

Ground Level Sampling

Ground level sampling is the procedure used to determine net ground level pollutant concentration (NGLC). This concentration is determined by subtracting the upwind pollutant concentration from the downwind pollutant concentration. Advantages of ground level sampling include relative economy and speed as compared to stack sampling.

By its nature, ground level sampling requires proper weather conditions for representative results. For example, sampling during or shortly after precipitation may not be representative of normal conditions due to suppression of fugitive dust because of surface wetting. Likewise, sampling during abnormally high winds may not be representative of normal conditions due to abnormal entrainment of surface dust. In such cases, however, the samples will be representative of conditions existing at the time of sampling.

Continuous Emission Monitoring Systems

Continuous emission monitors are devices which measure the concentration of various components of stack gas without the manual removal and analysis of samples. Some monitors remove a portion of the stack gas for external analysis (extractive), and some analyze components directly in the stack gas stream (in situ).

Detailed calibration and adjustment procedures are necessary to maintain accurate readings from a continuous monitor. Performance testing according to Federal Register procedures is required for certain sources.

Visible Emissions Evaluations

Visible emissions evaluation is the procedure for determining the opacity of emissions from a stack or flue. Opacity readings can also be made on fugitive emissions such as those from doors, windows, and vents.

Certification of Visible Emissions Evaluators

The TACB conducts the Visible Emissions Evaluators Course (VEEC) in Texas to train and certify visible emissions evaluators on a regular basis. The VEEC is conducted according to procedures described in the Federal Register and as outlined in Chapter 13.

Observation of Sampling and Analysis

Representatives of the TACB must be afforded the opportunity to observe all required sampling and analysis. Written notification 30 days in advance of the sampling date is considered adequate for the purpose of scheduling observers.

CHAPTER 2

STACK SAMPLING FACILITIES

General

Most sampling for representative results requires minimum sampling facilities for which the TACB has established the guidelines presented in this chapter. Stack sampling operations utilize a system of equipment to traverse a cross-section of the stack or duct through ports located such that a representative sample can be obtained. Normally, a monorail structure is erected so the cross-section of the stack may be traversed on two diameters for circular stacks and on a matrix layout for rectangular or other shaped stacks.

These guidelines cannot anticipate all situations, and special cases will occur. Non-standard or alternate installations are therefore evaluated on an individual basis, and in such instances detailed plans should be sent to the TACB for review and approval before the construction of stack sampling facilities is initiated.

Existing sources with stack sampling facilities approved previously by the TACB may not normally be required to meet these additional specifications described in this chapter. The 220-volt, 50-amp electrical outlet at the stack base as described in the Power Supply section of this chapter may, however, be necessary in certain cases due to the increased power requirements of TACB monitoring systems. The following guidelines constitute minimum requirements for safe and accessible stack sampling facilities:

Physical Features

Before consideration is given to the installation of sampling ports and platforms, certain dimensions and other features of the stack and stack gas must be verified in order that a representative sample is possible.

- Stack diameter must be at least one foot.
- Stack gas velocity head must be at least 0.1 inches of water.
- The stack must have at least 2-1/2 diameters of uniform undisturbed cross-section.

Sampling Ports

Port location

The optimum location of sampling ports is at least eight stack diameters downstream of any bends, inlets, constrictions, abatement equipment, straightening vanes, or other flow disturbance; and at least two stack

diameters upstream of the stack exit or other flow disturbance. Hydraulic diameter is used for non-circular stacks and is defined later in this chapter. This location permits a sample traverse to be taken using a minimum of twelve sampling points. A greater number of sampling points is necessary on stacks which fail to meet this location criteria. For a valid sample traverse to be obtained, however, sampling ports must be located at least two stack diameters downstream and at least one-half stack diameter upstream from any disturbance. If a 2-1/2 diameter length of uniform undisturbed stack cross-section is not available, stack modification must be made or an alternate sampling location must be chosen which will satisfy this criteria.

To minimize the increase in the number of sampling points required on stacks with undisturbed cross-section less than 10 but greater than 2-1/2 stack diameters in length, the sampling ports should be located such that the distance from the ports to the nearest upstream disturbance is four times the distance from the ports to the nearest downstream disturbance (see Figure 2-3 for minimum number of sampling points required). The 2-1/2 diameter criteria must be met; the 4:1 distance ratio is a recommendation.

Port Size

Ports are minimum three-inch ID standard industrial flanged pipe with six-inch bolt circle diameter and closed by a removable blind flange. Larger port sizes are necessary on large diameter, double-walled stacks which necessitate longer ports. These ports should also be standard industrial flanged pipe. Ports no smaller than four inches inside diameter must be provided on stacks greater than ten feet in diameter.

Port Installation

Ports shall be installed flush with the interior stack wall and shall extend outward from the exterior stack wall no less than three inches nor more than eight inches unless additional length is required for gate valves. Gate valves should be installed only when extreme stack conditions and/or the presence of hazardous materials require such devices for the safety of personnel. Ports shall be installed no less than five feet nor more than six feet above the floor of the platform and the clearance zone described later in this chapter must be maintained.

Number and Location of Ports on Circular Stacks

A minimum of two ports shall be installed on diameters 90° apart if the stack diameter plus one port length (stack inside wall to end of port extension) is less than ten feet. Four ports shall be installed on diameters 90° apart if the stack diameter plus one port length is equal to or greater than ten feet.

Number and Location of Ports on Non-Circular Stacks

The same upstream and downstream distance requirements discussed previously apply to non-circular stacks. The hydraulic diameter (four times the area divided by the perimeter) is used in place of the circular diameter. This becomes (2AB)/(A+B) for a rectangular stack, where A and B are the cross-sectional dimensions of the stack. The streamwise location of the sampling ports is determined in the same manner as for circular stacks using the hydraulic diameter. The hydraulic diameter is used only for determining the location of sampling ports and the required number of sampling points. Hydraulic diameter is not used in data reduction.

The cross-stream location of the sampling ports is dependent upon the total number of sampling points required. Figure 2-3 is used to determine the required minimum number of sampling points by reading the curve corresponding to the number of upstream hydraulic diameters (B) and downstream hydraulic diameters (A) and selecting the higher number.

The stack cross-section of square or rectangular stacks is divided into a matrix (i,j) of equal area rectangles such that $i = j$ or $i = j \pm 1$ and $i + j$ is equal to or greater than the total number of sampling points required. The number of sampling ports required is either i or j located along one side of the stack such that the centerline of each port is colinear with the centroid of each row of sampling points.

Stacks with cross-sections which are not circular or rectangular must be equipped with an adequate arrangement of sampling ports so that the stack cross-section may be divided into a sufficient number of area increments for a representative sample. If equal area increments are not possible, time weighting of the sample at the various sampling points may be necessary. Detailed plans of such installations should receive advance approval by the TACB.

Monorail Support Structure

The installation of a permanent monorail support structure is recommended to reduce set-up time and to eliminate the load-bearing requirements for the sampling ports. Figure 2-1 shows a drawing of the monorail support structure including the relative position of the bracket to the sampling port. This bracket is intended to be compatible with several types of sampling equipment. The loading requirements for ports or the monorail support structure are shown below.

Port or Monorail Support Loading

The port or monorail support installation shall be capable of supporting the following loads:

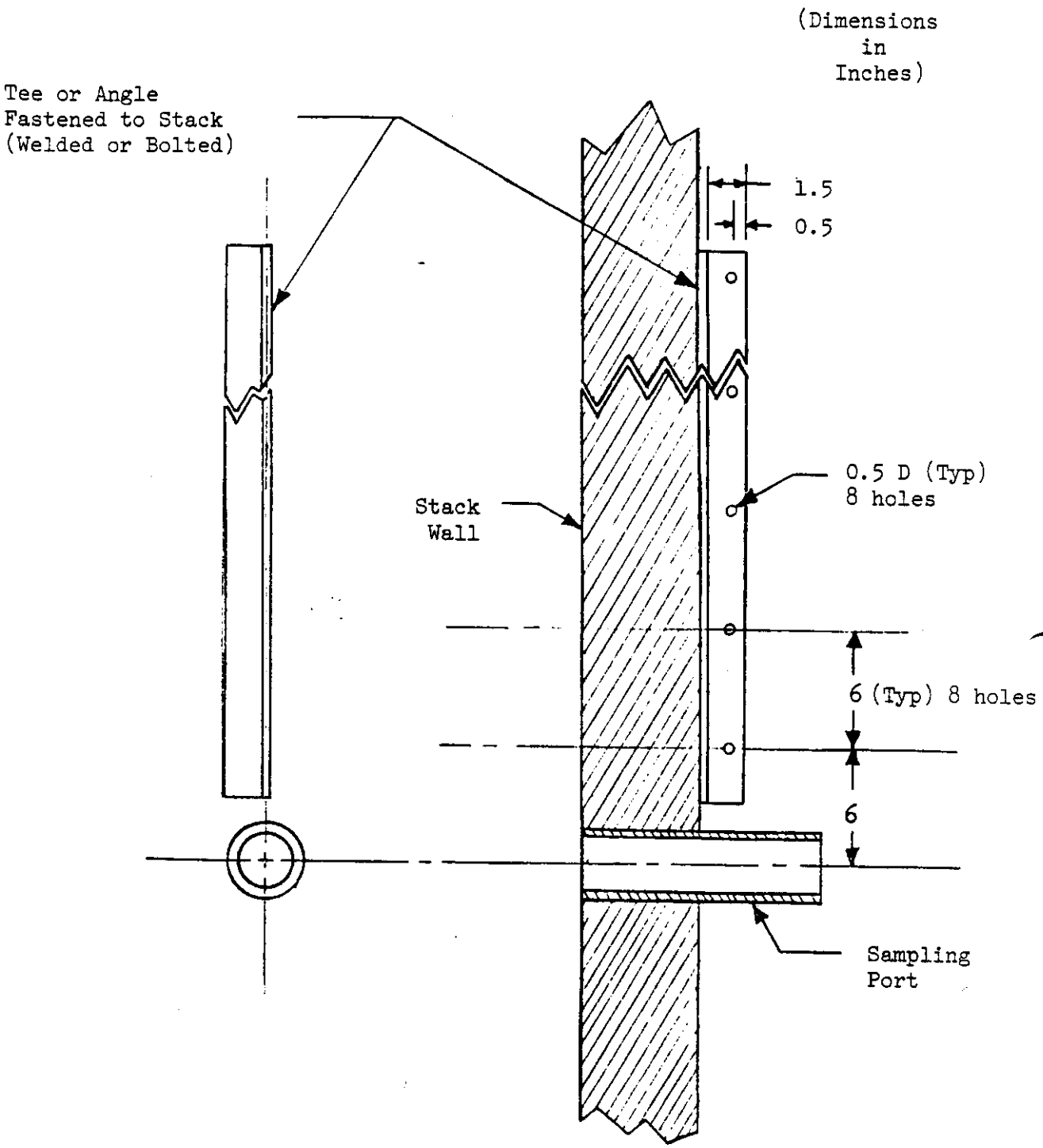

Figure 2-1

Monorail Support

- Vertical load of 200 pounds
- Horizontal load of 200 pounds
- Radial load of 1000 pounds (along stack diameter)

Work Platform

A work platform shall be provided around the stack circumference between the sampling ports and extending at least three feet beyond each port. If four ports are required, the work platform shall extend around the entire circumference of the stack. The minimum platform width shall be at least three feet measured radially with stack diameter. The work platform must be capable of supporting at least 2000 pounds.

Safe and easy access to the work platform shall be provided via ladder, stairway,or other suitable means. Safe guardrails shall be provided around the platform. Angular rather than round rail members should be used if possible. No open ladder well, stairwell, or other such opening shall be located within three feet of any sampling port. Ladder wells shall be covered at the platform and any opening to the platform shall be equipped with a safety bar or chain at the opening.

A temporary work platform for sampling operations is acceptable if proper safety and accessibility is provided. All other requirements detailed in this chapter such as for monorails, ports, loading, clearance, and power must be met by the temporary facilities.

Clearance Zone

A three-dimensional obstruction-free clearance zone shall be provided around each sampling port. The zone shall extend one foot above the port, two feet below the port, and two feet to either side of the port. The zone shall extend outward from the exterior wall of the stack at least one stack diameter (or stack radius if four ports are provided), plus one port length (inside wall to end of port extension) plus three feet. Although this clearance zone is adequate for TACB sampling equipment, sampling contractors may have other clearance needs. The clearance zone is illustrated in Figure 2-2.

Power Supply

Electrical power outlets shall be provided as follows:

Platform

One 115-volt, 15-amp, single phase, 60 hertz alternating current circuit with a grounded two-receptacle weather-proof outlet. Receptacles shall accept standard three-prong grounded household-type plugs or suitable adapters shall be provided.

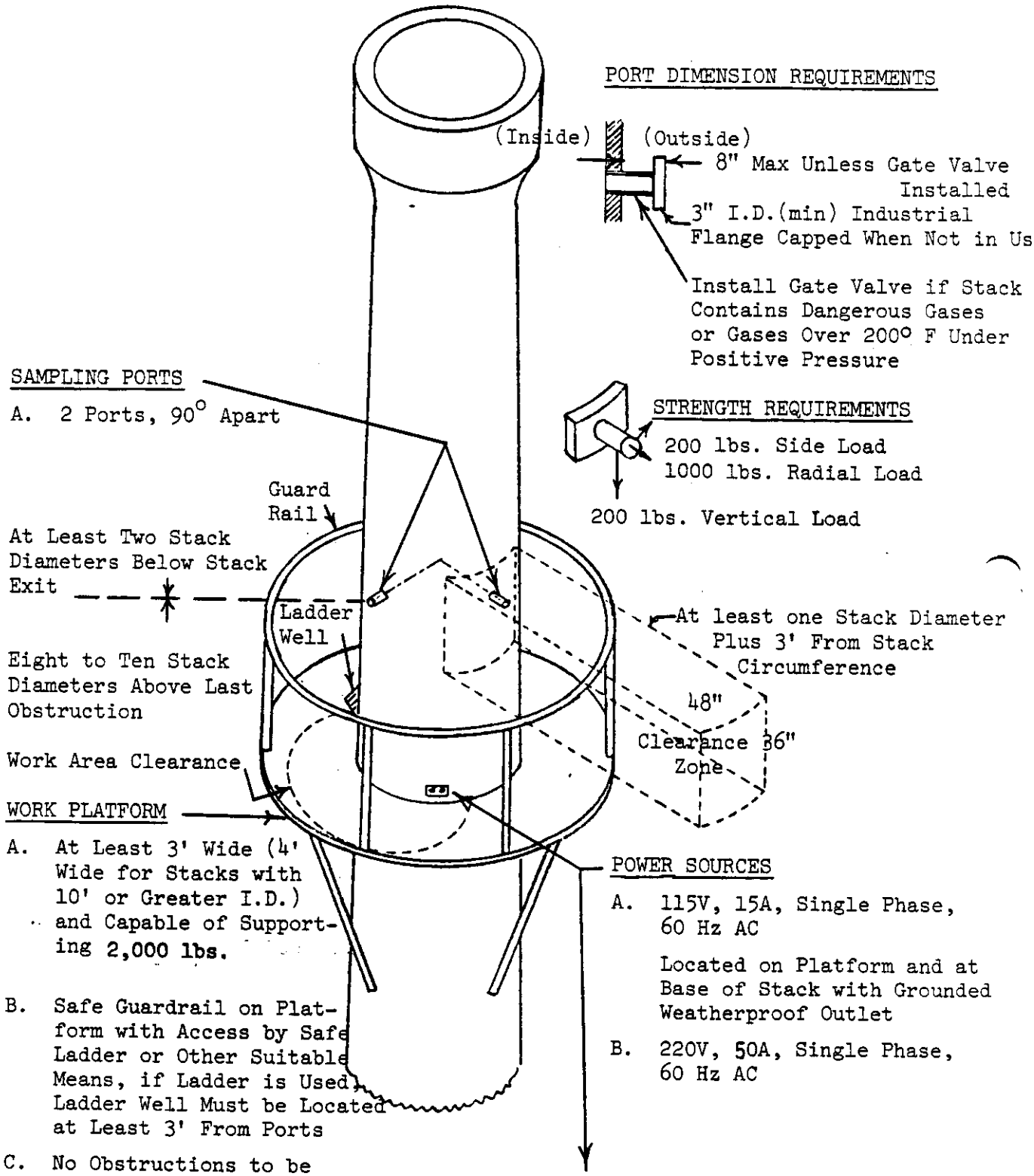

Figure 2-2
Stack Facilities

Stack Base

Two 115-volt, 15-amp, single phase 60 hertz alternating current circuits with grounded two-receptacle weather-proof outlets. Receptacles shall accept standard three-prong grounded household-type plugs or suitable adapters shall be provided.

One 220-volt, 50-amp, single phase alternating current circuit with standard 50-amp plug or suitable adapters capable of being wired to TACB power cord.

Vehicle Access and Parking

The stack sampling will be coordinated and controlled from a van or trailer parked near the base of the stack for the duration of the sampling except for situations in which sampling operations must be conducted from a rooftop or other location. Vehicle access and parking space must be provided since various umbilical, communications, and equipment transport lines will be strung from the van or trailer to the stack platform and will remain in position throughout the sampling period.

Gaseous Sampling - Concentration Only

Standard sampling ports and platforms are normally necessary for gaseous sampling because a velocity traverse is needed for flow rate determination in most cases. In sampling situations for which only pollutant concentration is needed or for which an accurate flow rate is available by other approved means, less elaborate sampling facilities may be acceptable. All facilities must, however, meet strength and safety requirements.

Gaseous sampling facilities for concentration only shall be sufficient for collection of a sample of stack gas according to standard gaseous sampling procedures. Adequate minimum facilities such as a one inch nipple shall be installed in the stack at a location where sufficient turbulence exists (no stratification) to insure a representative sample. Proper clearance must be provided for sampling operations or a permanent probe and sample line can be installed at the port location and extended to a more accessible sampling location. The probe and sample line must be installed so that leak checks can be made.

Permanent Monorail Systems

Source operators are encouraged to install permanent monorail systems on large stacks. Monorails must extend the full radial length of the clearance zone described previously, and must be capable of supporting a 200 pound load anywhere along the monorail track. Rollers must be properly lubricated and maintained in working condition. The sample box attachment hooks should be six inches above the port centerline. If the

monorail is installed with the hooks more than six inches above the port centerline, suitable adapters must be provided.

Miscellaneous Requirements

In addition to the specific requirements detailed in this chapter, other miscellaneous requirements are as follows:

- Power hoists shall be provided for sampling platforms 200 feet or more above ground level.
- Non-circular horizontal ducts should have provisions for vertical sampling. Circular horizontal ducts should have one vertical and one horizontal port. Suitable work platforms are necessary in both cases.
- Heat insulation shall be installed as necessary on high temperature stacks for safety in the vicinity of the work platform.
- The source operator is responsible for maintaining all sampling facilities in safe, useable condition at all times.

Excess Air

Additional facilities may be necessary for determining the composition and flow rates of feed stock and fuel on certain processes such as incinerators. This information, obtained at the time of sampling, is necessary to calculate the amount of air in the stack effluent in excess of stoichiometric.

Cyclonic Flow

Cyclonic or swirling flow may be encountered in a stack or duct due to certain circumstances such as cyclone collectors or tangential duct entry. Corrective measures such as straightening vanes may be necessary to alleviate the cyclonic condition.

The existence of cyclonic flow may be determined as described in Chapter 4. A method for sampling cyclonic flow is described in Appendix H, but advance approval should be obtained concerning its applicability for determining compliance status.

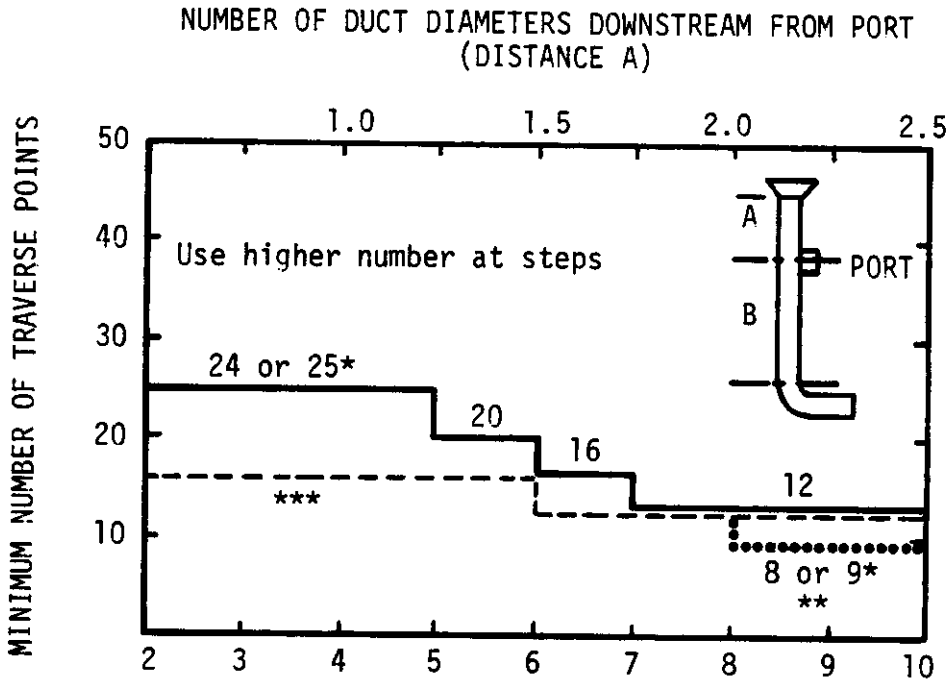

*Higher number is for rectangular stacks or ducts.
**Dotted line is for stack diameter of one through two feet (particulate and velocity traverses).
***Dashed line is for velocity traverses only (gaseous sampling).

Figure 2-3

Minimum Number of Traverse Points

CHAPTER 3

STACK SAMPLING EQUIPMENT

Sampling Apparatus

The sampling apparatus normally consists of the following equipment: a buttonhook-type sampling nozzle, stainless steel probe, glass probe liner, cyclone, filter, impingers, umbilical line, dry gas meter, vacuum pump, flow meter, and a nomograph or calculator. The usual equipment arrangement is shown in Figure 3-1.

The buttonhook-type sampling nozzle (1) is connected by a stainless steel coupling (2) to the probe. The probe liner (3) is a 5/8 inch O.D. medium-wall Pyrex or other suitable glass tube with a ground-glass ball joint on one end. The nozzle is connected to the stainless steel coupling with Teflon or steel ferrules, and the probe liner is connected to the coupling with Teflon ferrules or asbestos string. Teflon ferrules may not be suitable if the stack gas temperature exceeds 500°F. Probe liners of other material such as stainless steel may be used if any resulting bias does not affect the suitablility of the sample. For example, low bias is not suitable for compliance sampling, and high bias is not suitable for baseline sampling. Flexible lines between the probe and sample box should not be used because of the difficulty of proper cleaning. When a heated probe is used, the glass probe liner is wrapped from end to end with 26 gage nickelchromium wire. The glass tube is then wrapped with fiberglass tape and encased in the stainless steel probe for protection.

The ball joint end of the probe liner is connected by glass tubing to a glass cyclone and flask (4) which connects to a fritted glass filter holder (5). Both the cyclone and filter holder are contained in the heated portion of the sample box (6). The filter holder usually accommodates a 2-1/2 to 4 inch filter (the type of filter depending on the type sample to be taken). Glass tubing transports the sample from the filter into the condenser portion of the sample box (7).

The condenser consists of a series of glass impingers in an ice bath. There are usually four or five impingers (8, 9, 10, 11) in the condenser section. The stem configuration of the first two or three impingers are determined by the type of sample that is to be collected. The last two impingers can be modified to have a straight glass tube or perforated bulb that extends to approximately 1/2 inch from the bottom of the impinger. The next-to-last impinger is dry and the last impinger contains approximately 175 grams of dry silica gel.

The dry gas flows from the condenser section through the umbilical line (14), a vacuum gauge (15), a needle valve (16), a leakless pump (17) connected in parallel with a bypass valve (18), and a dry gas meter (19). The umbilical (14) usually contains a flexible sample line, pitot lines, power lines, thermocouple wires, and a communications

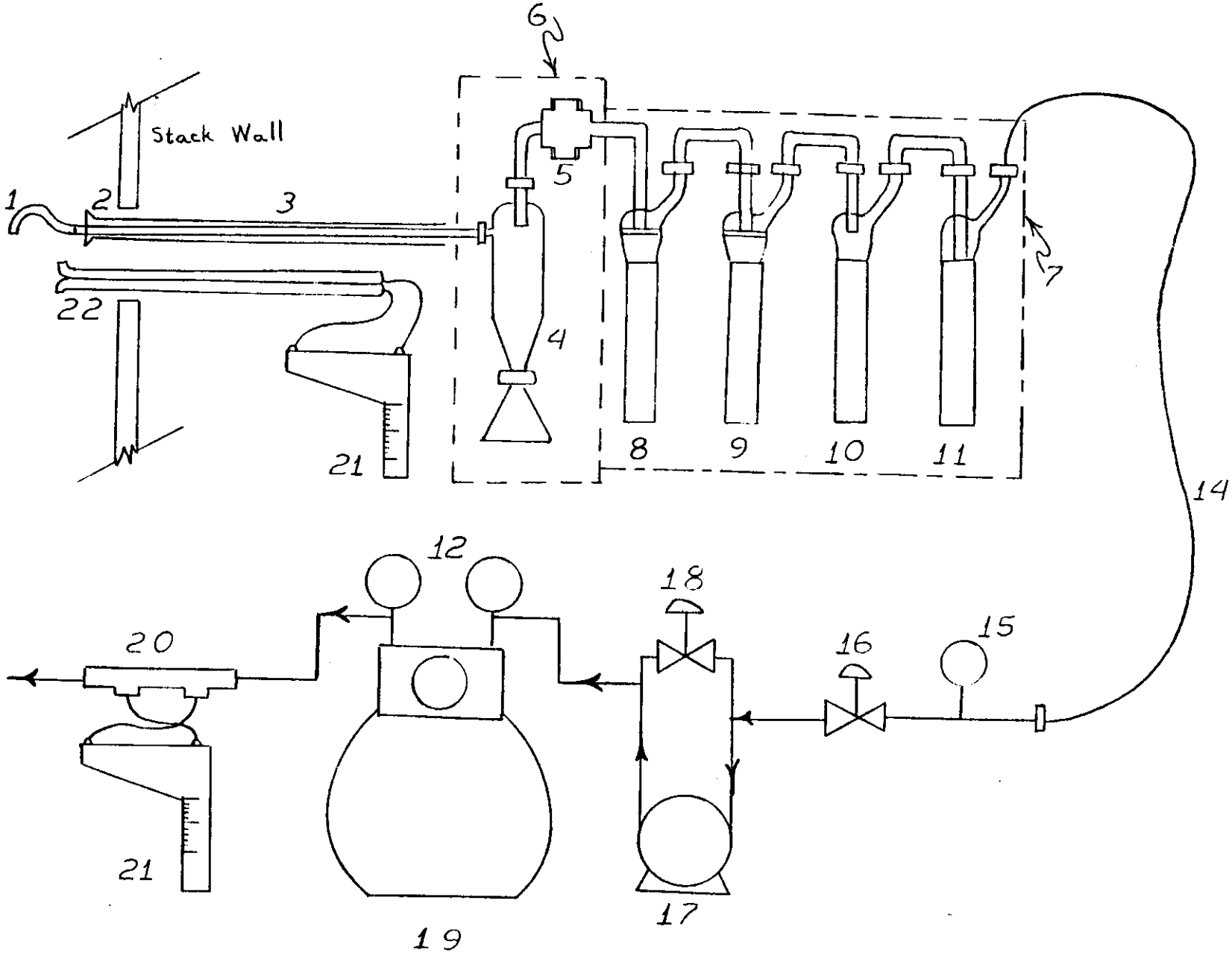

Figure 3-1

Particulate Sampling Train

line. The leakless pump (17) is rated at 4 cfm at zero vacuum and zero cfm at 26 inches mercury vacuum. The dry gas meter (19) should be readable to 0.01 cubic feet.

A calibrated orifice (20) is located in the line after the dry gas meter to measure instantaneous flow rates. Suitable temperature measuring devices are located in the heated side of the sample box and in the inlet and outlet of the dry gas meter. The thermometer in the heated side of the sample box should have a temperature range from at least 100°F to 500°F. The pressure differential across the calibrated orifice and the pitot lines (21) is normally measured with an inclined-vertical type manometer graduated in hundredths of an inch of water from zero to one inch and in tenths of an inch above one inch. Velocity measurements are made using a "Type S" (Stausheibe) or reversible pitot tube (22).

Velocity Measuring Devices

There are a number of different techniques for measuring stack gas velocity. The most common and preferred method is the pitot tube used in conjunction with a differential pressure gauge.

For stack sampling, a special pitot tube is used which adapts readily to the dusty, wet gas streams commonly encountered. This pitot tube, usually referred to as a "Type S" or reversible pitot tube, gives a differential pressure reading which can be corrected to correspond to the standard pitot tube differential pressure reading. A correction factor is determined in the laboratory, or a baseline factor is assigned if the pitot tube meets all dimension requirements. Calibration of stack sampling equipment is discussed in Appendix B.

Normally, one of two types of differential pressure indicating devices is used in conjunction with the pitot tube. The most common is the inclined manometer. The manometer yields good results when it is located in a stable environment away from vibrations and must be kept level and zeroed during use. Other differential pressure indicators such as Magnehelic Gauges may also be used if calibrated against a manometer and must be zeroed in the position of use.

Temperature and Pressure Measuring Devices

A metal stem thermometer, thermocouple, or glass thermometer may be used for measuring the stack temperature which should be measured to an accuracy of ±5°R up to about 1000°R. Above 1000°R an accuracy of ±15°R is usually sufficient.

Portable Barometers

Altimeters or other suitable devices may be used to measure the barometric pressure at the sampling location--more specifically, at the location that the sample volume is measured. The inclined manometer may be used to measure the static pressure in the stack.

CHAPTER 4

STACK SAMPLING PRELIMINARY PROCEDURES

General

The sampling location should be at a position where the stack flow is sufficiently uniform so that an accurate sample can be obtained. Eight stack diameters downstream and two stack diameters upstream from any disturbance such as bends, inlets, outlets, or changes in flow or diameter should yield sufficiently uniform flow. If the sampling port location does not fit these criteria, additional sampling points are necessary as discussed in the next section of this chapter. A detailed description of stack sampling facilities is found in Chapter 2.

Before a stack sample is taken, several preliminary tests may be necessary to determine some of the characteristics of the stack and the stack gas stream. The results of these preliminary tests are the basis for determining the nozzle size, number of sampling points, sampling time, sampling rates, and suitability of the sampling location.

Necessary preliminary parameters include stack gas pressure, temperature, moisture content, and velocity; determination of these parameters is repeated during sampling. If these preliminary parameters are available by other means such as from previous sampling results, preliminary tests may not be necessary if available data remains applicable. Forms for recording and calculating preliminary parameters are shown in Appendix D.

Number and Location of Sampling Points

The inside dimensions of the stack or duct must be determined before sampling points are located. In most cases the dimensions of the stack obtained from plant construction drawings are accurate; however, the inside diameter (or inside dimensions of non-circular stacks) should be measured where practicable. The pitot tube may be used for this measurement but the ends must be protected to prevent damage or clogging. The length of the port is also a critical measurement and may be different for each port.

Figure 4-1 is used to determine the minimum number of sampling points necessary. The number of sampling points is determined by reading the number of sampling points corresponding to both the number of downstream (A) and upstream (B) diameters from disturbances and selecting the greater number.

After the number of sampling points is selected, the stack cross-section is divided into equal areas as shown in Figure 4-2. For round stacks the sampling points are located such that half of the area increment represented by each point is radially on each side of the point. For rectangular stacks the sampling points are located at the centroid of each area increment. The equal area increments should be small enough to insure that the flow at each sampling point is representative of the flow in that area; however, the total number of area increments should be limited enough so that all points may be sampled within a reasonable period of time.

The location of sampling points for circular stacks is determined as shown in Table 4-1. Rectangular stacks are divided into a matrix of equal area rectangles such that $i = j$ or $i = j \pm 1$ where i and j are the number of rows and columns of the matrix. The minimum number of sampling points is the same as for circular stacks (Figure 4-1) with the hydraulic diameter (four times the area divided by the circumference) used for this calculation. The hydraulic diameter of a rectangular stack becomes $(2LW)/(L+W)$ where L and W are the stack cross-sectional dimensions. The hydraulic diameter is used only in the determination of the number of sampling points required; it is not used in data reduction.

The hydraulic diameter as described above is also used in determining the number of sampling points required for stacks with cross-sections other than circular or rectangular. If a symmetric layout of equal area increments of the cross-section is not possible, the layout should be as representative as possible. Extreme cases may arise in which all area increments are not equal in size but provide the most representative arrangement. In such cases the sampling time at each sampling point is weighted according to the size of the area increment represented by the point.

Special consideration may be necessary if physical stack characteristics create problems in meeting all requirements. If the stack is less than two feet in diameter, the number of points is obtained from the dotted line in Figure 4-1. The dashed line in Figure 4-1 is for velocity traverses only. The methods described in this manual are not applicable to stacks less than one foot in diameter. If any sampling points fall closer than one inch to the stack wall, these points should be located at one inch from the wall and sampled according to normal procedure; e.g., if three sampling points are located one inch from the stack wall, sampling time at that location is the total sampling time for the three points.

If more than the minimum number of sampling points is used, the layout must be according to Table 4-1 for round stacks and a modified matrix arrangement for rectangular stacks. The number of sampling points in the rows and columns of the matrix must not be less than but may be equal to or greater than the minimum. For example, a 3 x 12 sampling layout will satisfy a 3 x 4 matrix requirement.

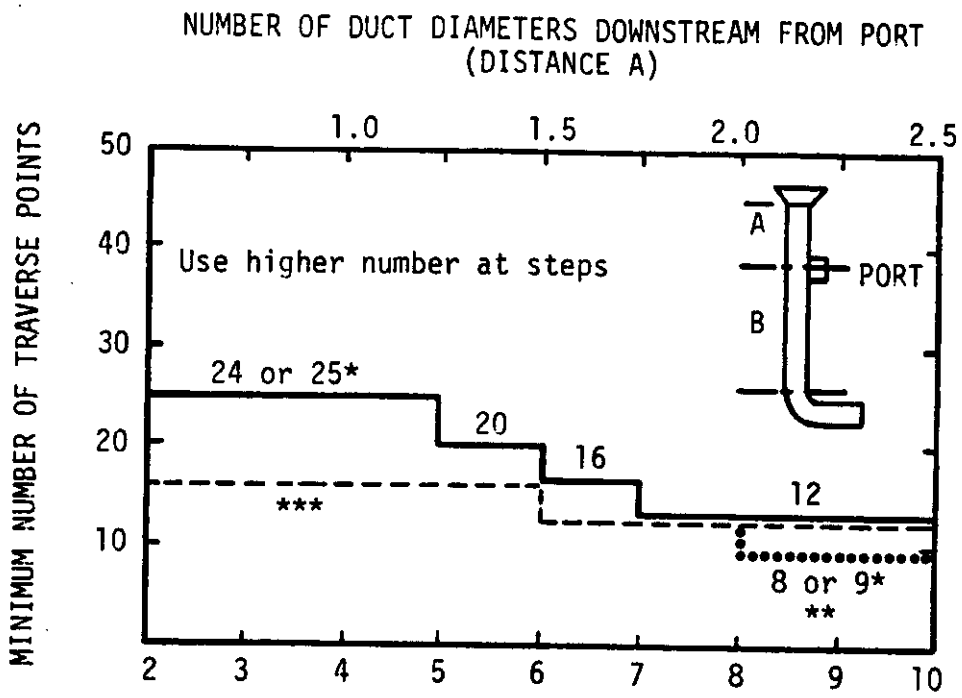

*Higher number is for rectangular stacks or ducts.
**Dotted line is for stack diameter of one through two feet (particulate and velocity traverses).
***Dashed line is for velocity traverses only (gaseous sampling).

Figure 4-1

Minimum Number of Traverse Points

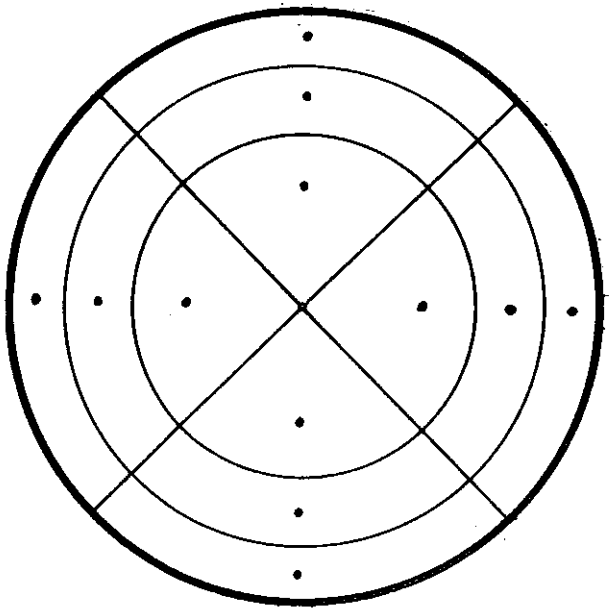

Cross section of circular stack divided into 12 equal areas, showing location of traverse points.

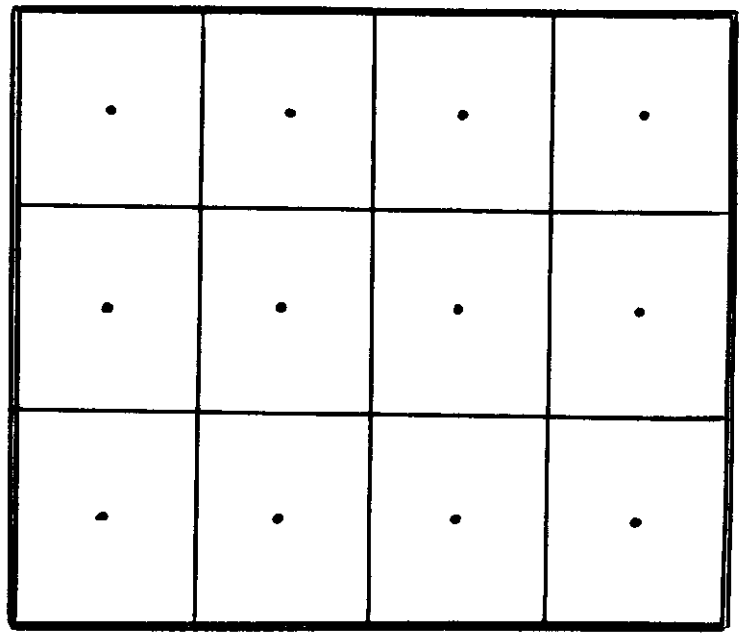

Cross section of rectangular stack divided into 12 equal areas, with traverse points at centroid of each area.

Figure 4-2
Examples of Equal Area Sample Points

Pressure and Temperature Measurements

Stack pressure is determined with a level, zeroed inclined manometer. The pitot tubes are aligned perpendicular to the flow stream (null position) and one of the two pitot lines is disconnected from the console. If the stack pressure is positive gauge pressure, the manometer will show positive deflection with the remaining pitot line connected to the positive side of the manometer. If the stack pressure is negative gauge pressure, the manometer will show positive deflection with the remaining pitot line connected to the negative side of the manometer. The absolute stack pressure is calculated as follows:

$$PS2 = (PS1)\ (0.07355) + PA$$

$$PS2' = PS1' + PA'$$

where PS2 = Absolute stack pressure (inches Hg)
PS1 = Stack gauge pressure (inches H_2O)
PA = Barometric pressure (to ± 0.1 inches Hg)
PS2' = Absolute stack pressure (Pascals)
PS1' = Stack gauge pressure (Pascals)
PA' = Barometric pressure (Pascals)

The preliminary stack temperature is obtained by suitable means such as a stem thermometer or thermocouple placed in the gas stream.

Probe Marking

The probe is marked relative to a reference point. The reference point is located at a distance from the nozzle equal to the port extension. Any difference in length of the port extensions must be compensated for by means such as markers on the short ports extending to the length of the long port. To obtain the distance from the reference point to each mark, K_L (Table 4-1) is multiplied by the stack diameter. The points may be marked with hose clamps, tape, or other suitable material impervious to stack conditions.

Stack Gas Moisture Content

The moisture content of the stack gas is an important factor in stack sampling. Nozzle size selection and sampling rate are dependent on the moisture content. Condenser methods or assumption of saturated conditions where approriate are two commonly used techniques. The moisture content indicated by the condenser method should always be compared to the moisture content at saturation. The smaller of the two values should always be used.

Traverse Point Number	LENGTH FACTORS, K_L (Fraction of stk. diam. from inside wall to traverse pt.) NUMBER OF TRAVERSE POINTS ON A DIAMETER											
	2	4	6	8	10	12	14	16	18	20	22	24
1	.146	.067	.044	.033	.025	.021	.018	.016	.014	.013	.011	.011
2	.854	.250	.147	.105	.082	.067	.057	.049	.044	.039	.035	.032
3		.750	.295	.194	.146	.118	.099	.085	.075	.067	.060	.055
4		.933	.705	.323	.226	.177	.146	.125	.109	.097	.087	.079
5			.853	.677	.342	.250	.201	.169	.146	.129	.116	.105
6			.956	.806	.658	.355	.269	.220	.188	.165	.146	.132
7				.895	.774	.645	.366	.283	.236	.204	.180	.161
8				.967	.854	.750	.634	.375	.296	.250	.218	.194
9					.918	.823	.731	.625	.382	.306	.261	.230
10					.975	.882	.799	.717	.618	.388	.315	.272
11						.933	.854	.780	.704	.612	.393	.323
12						.979	.901	.831	.764	.694	.607	.398
13							.943	.875	.812	.750	.685	.602
14							.982	.915	.854	.796	.739	.677
15								.951	.891	.835	.782	.728
16								.984	.925	.871	.820	.770
17									.956	.903	.854	.806
18									.986	.933	.884	.839
19										.961	.913	.868
20										.987	.940	.895
21											.965	.921
22											.989	.945
23												.968
24												.989

Table 4-1

Length Factors

Condenser Method

Several different condenser techniques can be used to determine stack moisture content. One such technique uses a preweighed impinger approximately half full of water followed by a preweighed impinger approximately half full of silica gel. A measured volume of stack gas (5-10 cubic feet) is drawn through the impingers. The total change in weight of the impingers is the weight of the moisture caught. The impingers should be in an ice bath while the stack gas is drawn. Because the condenser method may capture water droplets as well as water vapor, the method may yield incorrect results if water droplets are present in the stack gas.

The moisture fraction (BW) is calculated as follows:

$$BW = \frac{(MWC)\ (1.335\ \frac{liter}{gm\ H_2O})}{(MWC)\ (1.335 \times \frac{liter}{gm\ H_2O}) + (VDG)\ (\frac{528°R}{TM2})\ (\frac{PM2}{29.92})\ \ (28.32\ \frac{liter}{ft^3})}$$

$$BW = \frac{(MWC)\ (1.335 \times 10^{-3}\ \frac{M^3}{gm\ H_2O})}{(MWC)\ (1.335 \times 10^{-3}\ \frac{M^3}{gm\ H_2O}) + (VDG')\ (\frac{293°K}{TM2'})\ (\frac{PM2'}{1.01 \times 10^5})}$$

where
- MWC = Impinger weight gain (g)
- VDG = Corrected dry gas volume (ft^3)
- TM2 = Average meter temperature (°R)
- PM2 = Absolute meter pressure (inches Hg)
- VDG' = Corrected dry gas volume (m^3)
- TM2' = Average meter temperature (°K)
- PM2' = Absolute meter pressure (Pascals)

Saturated Conditions

If water droplets are present in the stack gas and the stack gas temperature is below the boiling point of water at stack pressure, the stack gas may be assumed to be saturated. The moisture content is then determined from the saturation curve (Figure 4-3) at the stack gas temperature.

The saturation curve shown in Figure 4-3 is for a pressure of 760 mm Hg. Significant error in the estimate of saturated moisture content can result from using Figure 4-3 if the stack pressure is significantly different from standard pressure (760 mm Hg); the following equation should be used in such cases.

$$MF = \frac{\left(10^{(A - \frac{B}{T-C})}\right) - 0.5}{P}$$

where MF = Moisture fraction
A = 8.361
B = 1893.5
T = Stack gas temperature (°K)
C = 27.65
P = Absolute stack pressure (mm Hg)

Molecular Weight of Stack Gas

A common method of determining the composition of the stack gas is the Orsat analysis. Flue gases normally contain CO_2, CO, H_2O, and N_2. The Orsat analysis normally measures the percentage (on a dry basis) of CO_2, O_2, and CO in the sample. The difference is considered to be largely N_2. A complete procedure for Orsat analysis is given in Appendix F.

After the Orsat analysis has been performed, the molecular weight of the stack gas may be determined by the following equation:

$$MWT = (BW)(18.0) + (BDG) \sum_{i=1}^{n} \left[(XC_i) \quad (MWTC_i) \right]$$

where MWT = Molecular weight of the stack gas
BW = Stack gas moisture fraction
BDG = Dry gas fraction of stack gas (1.0 - BW)
XC_i = Fraction of component i on dry basis
$MWTC_i$ = Molecular weight of component i of the stack gas

Assumption of the molecular weight of air for MWT is often sufficiently accurate for preliminary data. Another method of molecular weight determination is the Fyrite analysis. This method is not suitable for final data reduction when excess air or F factor calculations are made.

Velocity Determination

Before velocity measurements are taken, the inclined manometer must be leveled and zeroed and must remain level and zeroed while measurements

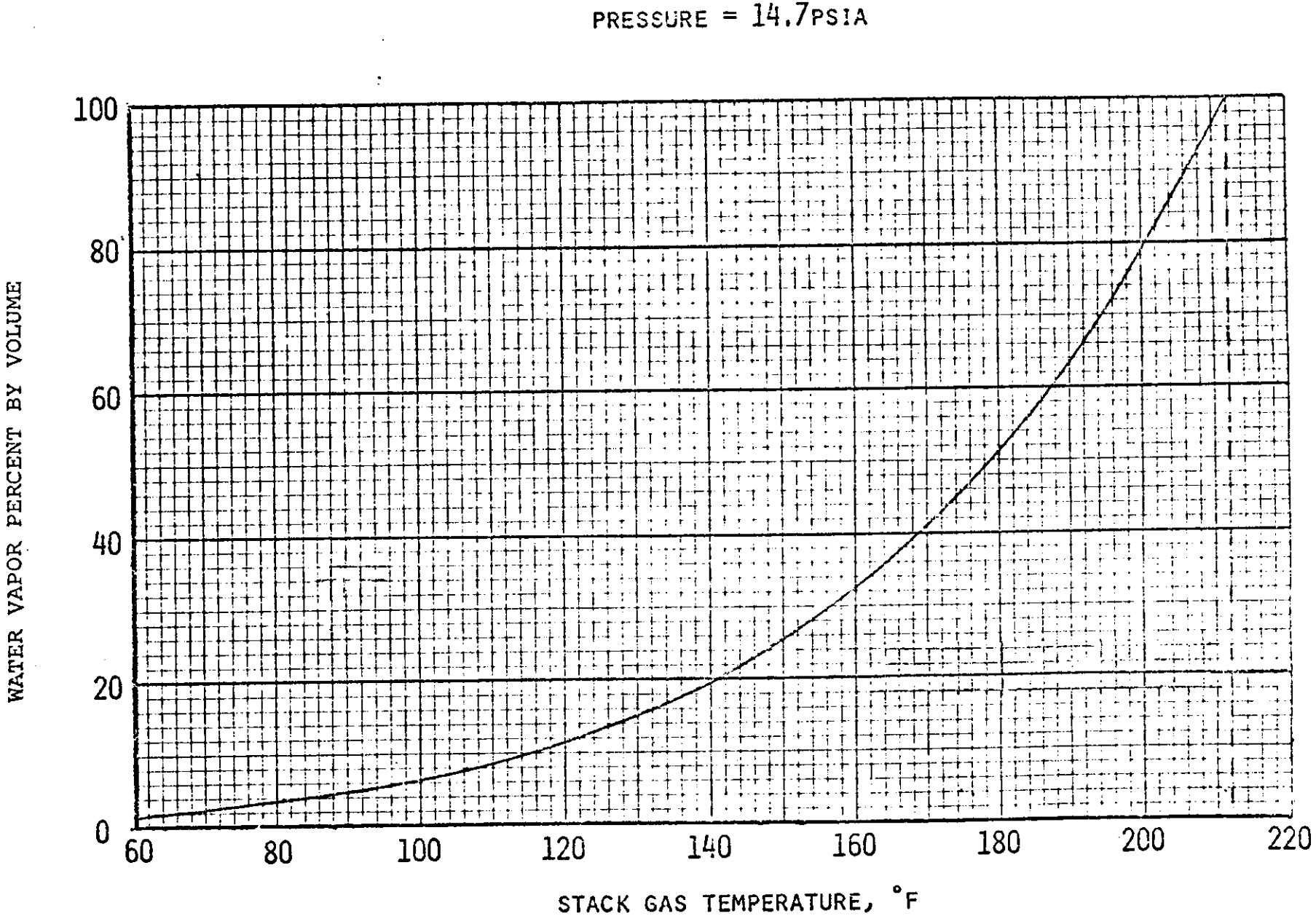

Figure 4-3

Percent Water Vapor in Air at Saturation

are taken. The pitot tube openings should be shielded from wind currents but not be closed when the manometer is zeroed. Correct connection of the pitot lines may be checked by blowing gently on the upstream pitot tube and noting the response of the manometer. Leaks in the pitot lines must be corrected before measurements are made (see Chapter 5 for leak check procedures).

The pitot lines must not be pinched or plugged during the velocity traverse. Since the pitot tube measures pressure differential, there is no flow through the lines. If a line is plugged, however, the readings will not be accurate. The velocity traverse is made by reading and recording manometer readings (ΔP) with the probe positioned at each probe marking. Any special sampling conditions encountered should be described in detail on the sampling data forms.

If cyclonic or other non-axial flow exists in a stack or duct, special sampling techniques are necessary. Correction of the cyclonic condition may be necessary before representative results can be obtained. Cyclonic flow may exist after devices such as cyclones and venturi scrubbers or if the stack has a tangential inlet or other condition that tends to induce non-axial flow.

The existence of cyclonic flow is determined by locating the pitot tube null position at each sampling point. The null position is located by rotating the pitot tubes until a zero manometer reading is obtained. The angle between the plane through the pitot tubes at the null position and the stack cross-sectional plane at each sampling point is measured and recorded. One method of angle measurement utilizes a plate scribed with angle markings attached to the probe at the sample box. A reference mark on the sample box is used for angle readings. A preferred method utilizes a protractor level to show angle readings when held with the base parallel to the plane of the pitot tubes. If the average of the absolute values of these angles is greater than 20°, cyclonic flow exists to such an extent that special techniques should be used in sampling. A method for sampling cyclonic flow is discussed in Appendix H.

When the velocity traverse is completed, the average velocity is calculated as follows:

$$AVEL = (85.48)\,(PTCF)\sqrt{\frac{(TS2)\,(\Delta PA)}{(PS2)\,(MWT)}}$$

$$AVEL' = (128.8)\,(PTCF)\sqrt{\frac{(TS2')\,(\Delta PA')}{(PS2')\,(MWT)}}$$

where:
- AVEL = Average stack gas velocity (ft/sec)
- PTCF = Pitot tube correction factor (see Appendix B)
- TS2 = Stack gas temperature (°R)
- PS2 = Absolute stack pressure (inches Hg)
- ΔPA = The square of the average of the square roots of each individual ΔP (inches H_2O)
- MWT = Molecular weight of stack gas

AVEL' = Average stack gas velocity (m/sec)
TS2' = Stack gas temperature (°K)
PS2' = Absolute stack pressure (Pascals)
ΔPA' = The square of the average of the square roots of each individual ΔP (Pascals)

The values 85.48 and 128.8 are constants for the English and Metric units respectively.

Initial Sampling Parameters

Isokinetic sampling involves maintaining the flow rate through the sampling nozzle such that the velocity in the nozzle equals the velocity in the stack at the sampling point. Proportional sampling involves maintaining the nozzle flow rate such that the ratio of the velocity through the nozzle to the stack gas velocity at the sampling point is constant (not necessarily one to one as in isokinetic sampling). Obviously, the flow rate through almost any size nozzle could be adjusted such that this velocity requirement is met. There are certain physical limitations, however, on nozzle size due to the sampling equipment: pump capacity, filter efficiency, and the critical flow through the impingers. Another limiting factor involves the representativeness of the sample. Small nozzles can yield less representative samples when large particles are present; the nozzle should be larger than the largest particles that might be encountered in the stack. Some guidelines for nozzle size selection are given in the following procedures.

Isokinetic Sampling

Isokinetic sampling or the condition of equal velocities implies a mathematical relationship between the two pressure differentials, ΔP and ΔH (K factor). The pressure differential measured by the pitot tubes, ΔP, indicates the stack gas velocity and the desired velocity through the sampling nozzle. The pressure differential across the orifice plate, ΔH, represents the flow rate of dry gas through the dry gas meter. A calculation sheet for use with the following procedure for selecting a nozzle and calculating the K factor is found in Appendix D. The procedure results in the determination of nozzle size and a K factor that will be used to determine ΔH for each ΔP measured during sampling.

Preliminary velocity, preliminary dry gas fraction, preliminary stack gas pressure, and preliminary stack gas temperature are used in step one to calculate the nozzle determination constant, C. This constant may be visualized as the stack gas velocity in feet per minute at dry standard conditions. The preliminary data forms for velocity, molecular weight, and moisture calculation are found in Appendix D.

The desired nozzle area (in square feet) is calculated in step two. A

desired flow rate corrected to dry standard conditions must be chosen in order to proceed with step two. Normally, this desired flow rate will be between 0.35 and 0.75 scfm. A nominal flow rate of 0.5 scfm will usually suffice.

In step three, the appropriate nozzle is chosen and the nozzle identification number and area are recorded. Usually, the available nozzle with an area nearest the desired nozzle area (step two) will be appropriate; however, this decision can be affected by the resultant flow rate and the total volume (see step four).

In step four, the flow rate for the selected nozzle is calculated using the constant C from step one and the actual nozzle area from step three. This flow rate is compared with the desired flow rate in step two as a check on the calculations. The total sample time is determined from the number of sample points and the time per point. Total sample volume (dry standard cubic feet) is calculated as the final part of step four.

In step five the desired $\Delta H = a(SCFM)^b$, where SCFM is the flow rate from step four and the a and b constants are determined from the orifice calibration (see Appendix B).

The value of ΔP in step six is calculated by squaring the average of the square roots of the ΔPs obtained during the velocity traverse (see Appendix D).

The K factor in step seven is calculated by dividing ΔH (step five) by ΔP (step six). This K factor is used during sampling to calculate each ΔH setting from the corresponding ΔP reading:

$$\Delta H = (K)\ (\Delta P)$$

Since the orifice a and b factors are normally obtained by orifice calibration for flow at standard conditions, unacceptable values of percent isokinetic may result if the temperature of the orifice varies significantly from standard temperature. In the usual configuration of a stack sampling console, the temperature of the orifice will be approximately that of the meter outlet. This temperature (Tmo) is used in the orifice temperature correction equation. The temperature-adjusted ΔH is calculated by:

$$\Delta H = (K)(\Delta P)\left(\frac{Tmo\ ^\circ R}{528}\right)$$

If the percent isokinetic is unacceptable after a sample has been completed and a new K factor is desired, the calculations in steps one through seven are repeated using the stack gas parameters obtained during the previous sample and a new K factor is calculated.

Proportional Sampling

Proportional sampling is normally used in sampling for gaseous pollutants. The velocity through the nozzle is maintained at a constant ratio to the stack gas velocity at the sampling point. Determination of the K factor is the same as for isokinetic sampling (above) beginning at step 5 with a desired flow rate through the sampling train of 0.1 - 0.3 scfm. In the absence of pollutant stratification in the stack, sampling is done at one representative point in the stack cross-section and the ΔP at this point is used in the K factor determination (step 7) and in the maintenance of proportional sampling rates.

Nomographs

Nomographs or other suitable methods may be used but the method described above is used and preferred by the TACB. The theory behind isokinetic sampling is evident in the step-by-step procedure; a permanent record of the calculations is made; errors and necessary adjustments are readily apparent.

CHAPTER 5

STACK SAMPLING FOR PARTICULATE MATTER

Isokinetic Sampling

To obtain a representative sample of a gas stream containing particulate matter, the sample must be collected isokinetically, i.e., the kinetic energy of the gas stream in the stack is equal to the kinetic energy of the gas stream through the sampling nozzle. Since the composition of the two gas streams is the same, isokinetic conditions are maintained if the velocity in the stack is equal to the velocity through the nozzle. If a sample of particulate matter is not collected isokinetically, inaccurate results may be obtained.

Whenever an object is placed in a moving gas stream, some disturbance of the flow patterns will occur. Isokinetic sampling through a sharp-edged nozzle will minimize the flow disturbance caused by the sampling nozzle. Figure 5-1 illustrates this point.

Large (heavy) particles tend to travel in a straight line and are not greatly affected by flow disturbances, whereas small (light) particles tend to follow the flow pattern. In a gas stream containing large and small particles, over-isokinetic sampling will produce a low pollutant mass rate (PMR) because fewer large particles will be caught than are representative of the flow stream. Under-isokinetic sampling will produce a high PMR due to a greater than representative number of large particles that will be caught.

The velocity of the gas stream in a stack generally varies from point to point; therefore, the flow rate or velocity through the sampling nozzle must be adjusted to maintain isokinetic conditions at each sampling point. The sampling train is described in Chapter 3. Determination of the nozzle volume and the flow rate through the nozzle is based on dry gas volume and flow rate measured at approximately ambient temperatures. For this reason, the flow rate through the orifice meter which corresponds to the desired flow rate through the sampling nozzle must be determined. The velocity of the stack gas, as measured by the pressure differential (ΔP) across the pitot tube, and the velocity through the nozzle, as indicated by the pressure differential (ΔH) across an orifice plate at the end of the sampling train, must be equal in order to maintain isokinetic flow. The TACB uses a mathematical method for nozzle selection and flow rate adjustment. Nozzle selection, flow rate adjustment, and other preliminary procedures are discussed in Chapter 4.

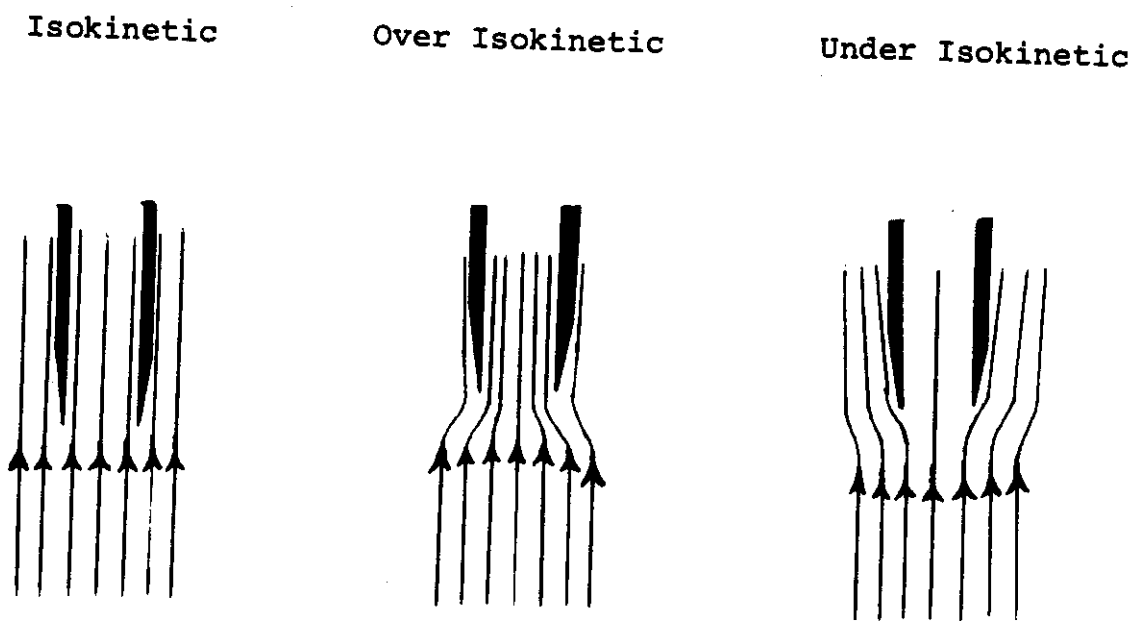

Figure 5-1
Isokinetic Flow

Sampling for Pollutant Gases

When pollutant gases as well as particulate matter are to be determined, sampling must be performed isokinetically. It is advisable, however, to choose a nozzle which will give a volumetric flow rate no greater than 0.3 cfm (at meter conditions) to optimize gas absorption efficiency in the impinger train. Sampling procedures for pollutant gases only are discussed in Chapter 6.

General Sampling Procedures

Sample Path

The sample is drawn into the sampling train through the nozzle and passes through the probe liner into the sample box. The sample enters the hot side of the sample box where it first passes through a glass cyclone and then a fritted glass filter holder. The cyclone has a flask attached to the bottom to catch large/heavy particles separated from the gas stream. The filter holder has a filter placed over the fritted surface. In certain cases in which no interferences or other losses may result, the filter may be replaced by a glass tube so that particulate matter which would be captured on the filter is caught in the impingers. The sample passes from the filter into the condenser (cold) side of the sample box which contains the impinger train. The type and number of impingers and solutions used are determined by the type of sample to be taken and are discussed later in this and subsequent chapters. After passing through the impinger train, the sample leaves the sample box and passes through the umbilical to the sampling console where the sample volume and temperature are measured.

Sampling Preparations

All glassware must be clean when placed in the sample box. The probe liner should be washed and the nozzle attached to the probe. The probe liner material should normally be glass; probe liners of other material may be used if any resulting bias does not affect the suitability of the sample. For example, low bias is not suitable for compliance sampling, and high bias is not suitable for baseline sampling. Heated probes should be used as needed to prevent chemical changes to the sample that would not normally occur in the atmosphere. Chapter 1 discusses the inclusion of condensibles and impinger material in emission rate calculations. A preweighed filter is placed over the fritted surface in the heated side of the sample box. The impingers are prepared with solutions (normally 200 ml each) and preweighed to ±0.1 gram (without stoppers). Detailed descriptions of impinger trains are discussed later in this and subsequent chapters. Labels can be used to identify each impinger but must be placed near the top of the impinger to prevent water absorption from the ice slurry. A light coating of silicone lubricant is used on the ground glass joints to insure a vacuum tight seal.

The manometers on the sampling console must be leveled and zeroed prior to sampling and must remain level and zeroed throughout sampling. The pitot tube openings must be protected from wind or other disturbance when the manometer is zeroed; disconnecting the pitot lines at the sampling console may also suffice. Pitot lines must be free from obstructions.

All temperature indicators must be working properly and the nomograph or K factor must be properly set prior to sampling. All pertinent parameters for the sample must be determined, e.g., total sample time, number of sampling points, sample time at each point. The sample time for an isokinetic sample is at least one hour and the sample volume is at least thirty cubic feet at meter conditions. Certain sampling conditions may necessitate different sample times and volumes. Prior written approval should be obtained for deviations in special cases. The sample on the filter should be large enough to be weighed accurately. Minimum sampling time at each point is two minutes to allow time for adjusting sampling parameters and recording data. The filter may need to be replaced during the sample if blinding occurs. If the moisture content and sample volume are large, the impingers may also need to be replaced to prevent overflowing. Sampling may be temporarily halted for such reasons without invalidating the sample.

Operating Conditions

The production rate of the facility being sampled should not vary more than ±10% during sampling. Operating conditions during sampling should be representative of normal or maximum production conditions. If sampling is done at other than maximum production conditions, additional sampling may be necessary to demonstrate satisfactory operation at production rates more than 10% above the average rate during sampling. Each sample must be completed within 24 hours, and each set of samples must be completed within one week. Processes may be cyclic or may have intermittent periods of peak emissions. Portions of the cycle during which the pollutant mass rate (PMR) is high must be included in sampling operations. Samples should be taken under conditions (non-upset) representing maximum emissions.

If more representative sampling results will be produced by allowing periods of peak PMR which are not upset conditions to be averaged over the daily operating cycle, averaging may be considered. A method for averaging intermittent occurrences such as soot blowing is described in Appendix G.

Leak Check Procedures

A vacuum-tight system is necessary to prevent dilution air from entering the sampling train. Leak-free pitot lines are also necessary to obtain

correct velocity (ΔP) readings. If the pitot tube leak check is done first, sampling can begin immediately following the sampling train leak checks.

The pitot tube leak checks are performed after the complete sampling train is assembled, before and after any opening of the pitot lines during the sample (moving or adjustment), and after the sample is completed. The pre-sample and intermediate leak checks are good practice but may be omitted unless pitot tubes or lines are replaced during sampling. Such checks are recommended to preclude the voiding of an entire sample due to a post-sample leak that could have been eliminated earlier.

The pitot tube leak check is performed using the manometer on the sampling console. With one pitot line connected to the positive side of the manometer and the negative side of the manometer open to the atmosphere, the pitot line is pressurized from the probe end to approximately five (5) inches of water and plugged. The manometer reading should not change for ten to fifteen seconds after stabilizing; otherwise, the leak must be eliminated and the leak check repeated. The positive pressure leak check is repeated on the other pitot line. The above procedure is repeated on both pitot lines with a vacuum of approximately five (5) inches of water using the negative side of the manometer with the positive side open to the atmosphere. If the pitot lines remain on the respective pitot tubes throughout the sampling period, leak checks may be done with only the pressure (positive or negative) that each respective pitot line contains during sampling. The positive and negative pressures to the pitot lines may be applied by mouth or rubber squeeze bulb. The pressure and vacuum on the pitot lines should be applied slowly to avoid blowing fluid out of the manometer.

The sampling train leak checks are performed after the complete sampling train is assembled, before and after any opening of the train during the sample (moving or component replacement) and after the sample is completed. The pre-sample and intermediate leak checks are good practice but may be omitted unless sampling train components are replaced during sampling. Such checks are recommended to preclude the voiding of an entire sample due to a post-sample leak that could have been eliminated earlier.

The sampling train pre-sample leak checks are performed using the following procedures. The cyclone inlet (immediately downstream from the probe liner) is sealed and the console operator is notified that the leak check may begin. The pump is started with the course vacuum valve closed and the bypass valve open. The course valve is slowly opened and the vacuum should begin to increase. The bypass valve is slowly closed until the vacuum reaches fifteen (15) inches of mercury gauge. At this vacuum the dry gas meter flow rate must not exceed 0.02 ft^3/min or 4% of the average sample flow rate, whichever is less. If this allowable leak rate is exceeded, the leak must be eliminated and the above procedure repeated. A lower vacuum may be used for the leak check provided it is

not exceeded during the sample. After the leak check from the cyclone is completed, a leak check at one (1) inch of mercury vacuum is performed with the complete sampling train assembled and the nozzle tip sealed. The same leak rate criteria applies. If Teflon or other positive sealing ferrules are used between the nozzle and probe liner, a one-step leak check with the nozzle tip sealed instead of the cyclone inlet is sufficient. Before the console is turned off at the end of a leak check, the vacuum should be released slowly to prevent spillover or backup of impinger solutions.

After the sample is completed, a post sample leak check must be performed on the sampling train by the same procedure as the pre-sample leak check described above. The post sample leak check is done with a vacuum equal to or greater than the highest vacuum that occurred during the sample. A post-sample leak check must be performed before any sampling train component is removed. Any unacceptable leak rate must be recorded before component removal. If an unacceptable leak rate (more than 0.02 cfm or 4% of average flow rate) is obtained from the post sample leak check, the sample must be voided or the sample volume corrected for the dilution from the leak. If the leak correction is more than ten percent (10%) of the sample volume, the sample must be voided with no sample volume correction allowed. Leak rate corrections for sampling train components replaced during the sample are prorated according to the time each component was in use in the sampling train. If the sample volume is corrected for an excessive post sample leak rate, the correction may be reduced by the 0.02 cfm allowable leak rate.

Sampling

After the necessary leak checks are performed and the sample box and probe (if heated) have heated sufficiently (normally 248°F ± 25°F), the initial dry gas meter reading is recorded and the sampling probe is positioned in the stack with the nozzle at the initial sampling point. The nozzle must not contact the inside of the port or stack wall where deposited material could contaminate the sample. If sampling begins at the point farthest from the port, the time to cool the probe after the sample is shortened; if sampling begins at the point nearest the port, stack heat will heat the probe during the final portion of the sample. The console should be warmed up to provide uniform operation before sampling begins; i.e., limber meter diaphragms. Operating the console at a nominal flow rate for a short time will usually suffice. After the probe is positioned, the console operator should record the time, initial meter reading and temperatures, and begin the sample by turning on the pump, opening the coarse valve, and adjusting the bypass valve until the desired flow rate is obtained as calculated from the nomograph or K factor. Probe and sample box temperatures of 248°F ± 25°F should normally be maintained during sampling. Heated probes should be used as needed to prevent chemical changes to the sample that would not normally occur in the atmosphere. Inclusion of impinger catch is discussed in Chapter 1. The primary purpose of heating the hot side of the sample box is

to prevent blinding of the filter with moisture or other condensibles that should be carried over into the impingers for analysis. The suggested sample box temperature of 248°F ± 25°F will usually suffice, but lower temperatures may be maintained so long as the filter is not blinded and no condensibles are lost. The sampling data is recorded as required on the stack sampling field data sheet (Appendix D).

The stack crew should be notified approximately 30 seconds before the time to move the probe to the next sample point. The signal to move is given approximately five seconds before the time to change points. When the probe is repositioned, the console operator should record the meter reading, read the new ΔP, obtain the new ΔH from the nomograph or K factor, adjust the flow rate, and record all data required on the stack sampling field data sheet. The port opening around the probe should be plugged during sampling to prevent the entrance of dilution air and/or disturbance of the flow in the stack. After the last point has been sampled, the coarse valve on the console is closed, the pump is turned off, and the meter reading is recorded. Sample flow rate should be turned off slowly in case sufficient vacuum has built up in the sampling train to cause a backup of impinger solutions. The sample box and probe are moved to the next port and the above procedure is repeated. The probe should be kept horizontal and the nozzle plugged as soon as possible after removal from the stack to prevent loss or contamination of sample. The particulate matter in the probe can represent a significant portion of the total sample. If the sampling train is opened before completion of the sample, leak checks must be performed. At the end of the sample, a post sample leak check must be performed. Leak checks are performed as described in Leak Check Procedures.

At least three sample runs are performed per stack to insure that at least two valid samples are obtained. Calculations are performed separately for each sample, then the results are averaged. Data reduction is discussed in Chapter 8. Before a second sample is begun, the percent isokinetic of the first sample should be checked using the Field Check of Percent Isokinetic form (Appendix D). The nomograph or calculated K factor should be changed for additional samples if the percent isokinetic is not acceptable (100% ± 10%). If a sample is voided in the field (such as for an unacceptable post sample leak check due to a broken liner) an additional sample should be taken.

Sample Recovery

At the end of each sample, the electrical power is disconnected from the sample box and the hot side opened to allow cooling of the glassware. The ends of the probe liner are capped as soon as possible. The pitot lines to the probe are disconnected and the probe is removed from the sample box. The impingers are capped, removed from the sample box, and transferred to the weighing area. The impingers are weighed (without stoppers) and the solutions and impinger rinses are placed in clean sample bottles. The weight of any water caught in the cyclone must be

determined and added to the impinger weight gain. Distilled water is normally used to rinse the glassware. Acetone should be used to wash the probe liner and glassware when water is unsatisfactory. The probe is washed by passing a brush through the inside of the glass liner after the initial rinsing of the probe. The probe liner is then rinsed again and the operation is repeated until the probe rinse is clear (at least three times for stainless steel liners). The brush is then rinsed into the same sample bottle as the probe wash. The inside of the sampling nozzle is washed in the same manner. Plastic sample bottles used to hold acetone washings should be pre-treated with acetone. This conditioning is done by allowing the bottles to remain filled with acetone approximately 12 hours to remove plasticizers. The acetone used for this treatment must not be used in sampling operations. The filter is removed from the holder, folded with the particulate matter to the inside, placed in an envelope or other clean container and sealed. The sample catch from the cyclone and the probe wash should be stored and analyzed separately from the filter and impinger catch. An indication of the composition of the particulate matter in the stack may be seen from comparison of these catches. Large heavy particles that do not follow the flow stream should be caught in the probe and the cyclone. Small light particles that normally follow the flow stream should be caught on the filter and in the impingers.

Blanks must be subjected to all the same conditions to which the sample components are subjected, except for being used in the sample. For instance, blanks of probe wash solution must be taken from the squirt bottle used to wash the probe, not from the source of solution in the field or the laboratory. Solutions must not be contaminated by more than 0.001% by weight. This converts to an allowable blank weight of 8 mg particulate matter in one liter of acetone, 10 mg particulate matter in one liter of DI water, 10 mg H_2SO_4 in one liter of 6% H_2O_2, etc.

Filter blanks are normally necessary to document the potential for contamination or loss of filter material due to handling, etc. If practical, filter blanks should be subjected to conditions similar to those to which sample filters are subjected, except for being used in the sample. These conditions include being loaded in and unloaded from a filter holder and being heated to the same temperature as the sample filters for the same length of time. If the filter blank gains weight, the difference is subtracted from the total weight gain of each sample filter; if the filter blank loses weight, the difference is added to the total sample weight gain of each sample filter.

Necessary precautions must be taken to protect the samples. The samples should be carefully removed from the sampling train and placed in sealable, nonreactive, identified containers. Samples should be placed in a carrying case (preferably locked) so that they are protected from breakage, contamination, and loss. The identification on the field data sheets should also be recorded on the sample containers so that the data will be identified with the sample throughout the analysis. Sample

handling should be kept to a minimum and a chain of custody record should be kept listing each person responsible for protection of the samples through final disposition (see Appendix D).

Summary of Usual Criteria for Isokinetic Sampling

Item	Criteria
Number of samples	3
Sample Volume	≥30 ft^3 at meter conditions
Sample Duration	≥1 hour
Isokinetic	100% ± 10%
Manometers	Level and zeroed
Probe Heat	248°F ± 25°F as needed
Box Temperature	248°F ± 25°F or as necessary
Production Rate	±10%
Leak Checks	
Pitot Tubes	≥5" H_2O
Max Leak Rate	Manometer steady for 10-15 sec.
Sampling Train	15" Hg or ≥ Max vacuum
Max Leak Rate	0.02 cfm or 4% of flowrate
Max Leak Correction	10% of sample volume
Purge (if necessary)	2 ft^3
Blanks	
Impingers	Necessary
Probe Wash	Necessary
Filter	Normally necessary

Impinger Trains

This section describes some recommended impinger trains. Solutions and methods for analysis are described in the laboratory manual.

Some mnemonics are used in the following tables as follows:

IMP	Impinger
PART	Particulate Matter
ST	Straight
PB	Perforated Bulb
GS	Greenburg-Smith

Particulate Matter Only

IMP	CONTENTS	CAPTURED	IMP TIP
1	DI H_2O	PART	ST or PB
2	DI H_2O	PART	GS or PB
3	Dry	H_2O	ST or PB
4	Silica Gel	H_2O	ST or PB

Particuate Matter and Sulfur Dioxide

IMP	CONTENTS	CAPTURED	IMP TIP
1	80% Isopropanol	PART, H_2SO_4, SO_3	ST or PB
2	6% H_2O_2	SO_2	GS or PB
3	6% H_2O_2	SO_2	ST or PB
4	Dry	H_2O	ST or PB
5	Silica Gel	H_2O	ST or PB

NOTES: 1) The impinger train must be purged with at least two cubic feet of ambient air at the end of the run to sweep SO_2 out of impinger one and into impingers two and three.

2) The first impinger will trap sulfuric acid and particulate matter that passes through the filter. Quantitation methods are described in the laboratory manual.

Particulate Matter in the Presence of Hydrogen Fluoride

IMP	CONTENTS	CAPTURED	IMP TIP
1	DI H_2O	PART	GS or PB
2	DI H_2O	PART	GS or PB
3	0.1 N NaOH	Gaseous Fluoride	GS or PB
4	Dry	H_2O	ST or PB
5	Silica Gel	H_2O	ST or PB

NOTES: 1) A smooth glass filter bypass is used instead of a filter.

2) This train will trap particulate matter, inorganic fluoride particulate matter, and gaseous fluorides, but is only suitable for quantitating particulate matter or total fluorides. Gaseous sampling for HF is discussed in Chapter 6.

Particulate Matter and Chlorine and/or Chlorides

IMP	CONTENTS	CAPTURED	IMP TIP
1	DI H_2O	HCl, Cl^-, PART	GS or PB
2	Alkaline Arsenite	Cl_2	GS or PB
3	Alkaline Arsenite	Cl_2	GS or PB
4	Dry	H_2O	ST or PB
5	Silica Gel	H_2O	ST or PB

NOTE: 1) The original volume of the impinger solutions must be measured as accurately as possible and recorded since the analysis may be based on the molar quantity of arsenite remaining.

2) The DI H_2O impinger may be omitted if differentiation of Cl_2 is not necessary.

Particulate Matter and Ammonia

IMP	CONTENTS	CAPTURED	IMP TIP
1	DI H_2O	PART	GS or PB
2	0.1 N H_2SO_4	NH_3	ST or PB
3	0.1 N H_2SO_4	NH_3	ST or PB
4	Dry	H_2O	ST or PB
5	Silica Gel	H_2O	ST or PB

NOTE: Particulate matter is captured in the first impinger, but the water will also be saturated with ammonia. The impinger train must be purged with at least two cubic feet of ambient air at the end of the run for partial recovery of ammonia from the first impinger into impingers two and three.

Particulate Matter and Hydrogen Sulfide

IMP	CONTENTS	CAPTURED	IMP TIP
1	DI H_2O	PART	ST or PB
2	0.1 M Zinc Acetate	H_2S	GS or PB
3	0.1 M Zinc Acetate	H_2S	GS or PB
4	Dry	H_2O	ST or PB
5	Silica Gel	H_2O	ST or PB

NOTE: H_2S and SO_2 cannot be determined simultaneously. If only SO_2 and particulate matter are to be determined, the particulate matter/SO_2 train may be used. If only H_2S and particulate matter are to be determined, the particulate matter/H_2S train may be used. If both SO_2 and H_2S are to be determined, separate samples must be taken.

Sulfuric Acid Mist

Since sulfuric acid may exist as mist, sampling for sulfuric acid must be isokinetic. The sampling train for particulate matter and sulfur

dioxide described earlier in this chapter is used. Sulfuric acid and sulfur trioxide are captured in the first impinger (isopropyl alcohol) and cannot be differentiated; but since SO_3 becomes H_2SO_4 upon contact with moisture, SO_3 in the first impinger is calculated as H_2SO_4. If the stack gas temperature is less than 212°F (100°C), the probe and sample box should be heated as described in the isokinetic sampling procedure (normally 248°F ± 25°F), and the filter should be analyzed for sulfates.

Fluidized Catalytic Cracking Units (FCCUs)

Special problems may be encountered in the sampling and analysis of particulate matter samples from FCCUs. Details are discussed in Appendix M.

CHAPTER 6

STACK SAMPLING FOR GASEOUS POLLUTANTS

General

Gaseous pollutants that occur in the stack in the gaseous phase are sampled using the techniques described in this chapter. Certain gaseous pollutants (condensibles) may not remain gaseous at ambient conditions. These pollutants may be sampled with gaseous sampling techniques if they remain gaseous in the stack. If a partial change from the gaseous phase may occur in the stack, sampling should be isokinetic (Chapter 5). Condensibles are discussed in Chapter 1.

This chapter describes sampling methods specifically for sulfur dioxide, hydrogen sulfide, hydrogen fluoride, and nitrogen oxides, and mentions gaseous organic compounds. Gaseous pollutants are normally sampled with standard stack sampling apparatus as described in Chapter 3, but are sampled proportionally instead of isokinetically and with impinger trains designed to capture these pollutants by irreversible chemical reactions. Nitrogen oxides are sampled using bomb sampling techniques.

Standard methods are used by the TACB and are recommended for sampling which will be submitted to satisfy Agency requirements. In the event that standard methods cannot be applied to a particular situation, alternate methods should have advance approval.

Apparatus

The apparatus is the standard isokinetic stack sampling apparatus (Chapters 3 and 5) with the following additions:

1) Probe liner: Pyrex glass for stack temperatures up to 750°F, Vycor for temperatures up to 1200°F, and quartz for temperatures up to 2000°F.

2) Probe: 316 stainless steel for temperatures up to 1600°F.

3) Nozzle: Largest available size. Teflon ferrules may not be suitable for temperatures above 500°F. For higher temperatures, Grafoil or asbestos string may be used to fabricate a ferrule. If a nozzle is not used, the probe liner must be sealed in the probe with a union and ferrule.

4) Monorail and support structure: A velocity traverse may be possible with the pitot tube assembly held by hand so that a complete monorail system for the box/probe assembly is not necessary.

5) Sample box: Same as for isokinetic sampling.

6) Glassware: Same as for isokinetic sampling with the following options:

   a) The filter and cyclone may be replaced with glass tubing.

   b) Impingers with perforated bulb tips (typically ten 1-mm diameter holes) or with EC porosity glass frits may be used for bubbling gas absorbing solutions. These tips can provide better absorption efficiency and less pressure drop than a Greenburg-Smith tip; however, cleaning is difficult and contamination must be avoided.

7) Umbilical line: Same as for isokinetic sampling.

8) Stack sampling console, pumps, etc.: Same as for isokinetic sampling.

General Procedures

Preliminary procedures for stack sampling are discussed in Chapter 4. A velocity traverse, moisture determination, and orsat analysis are not necessary as preliminary information but are necessary for the data reduction of each sample. Moisture determination is obtained during the sample. Velocity and orsat information may be obtained immediately before or immediately after each sample. Impinger train assembly, weighing, and leak check procedures are the same as for isokinetic sampling (Chapter 5). Various impinger trains and solutions are discussed later in this chapter. Field data forms for gaseous sampling are shown in Appendix D. Calibration procedures are discussed in Appendix B.

Gaseous sampling is normally done at one point, usually near the center of the stack. The sampling flow rate should be approximately 0.3 cfm (meter conditions) or less to obtain good absorption efficiency. Sampling time is usually 30 minutes, but may be longer if the plant operation is such that a longer duration sample would be more representative. The sample volume should be at least 10.0 ft^3 (meter conditions) to be sufficient for laboratory analysis. During the sample necessary parameters such as dry gas meter inlet and outlet temperatures, sample box temperature (if filter is used), and stack temperature are recorded on the field data sheet at least every five minutes.

Sample volume is measured with a calibrated dry gas meter. Sample flow rate is kept proportional to stack velocity. If the concentration remains constant during the sampling period, the sampling may be conducted at a constant flow rate.

At the end of the sample run, the final dry gas meter reading is

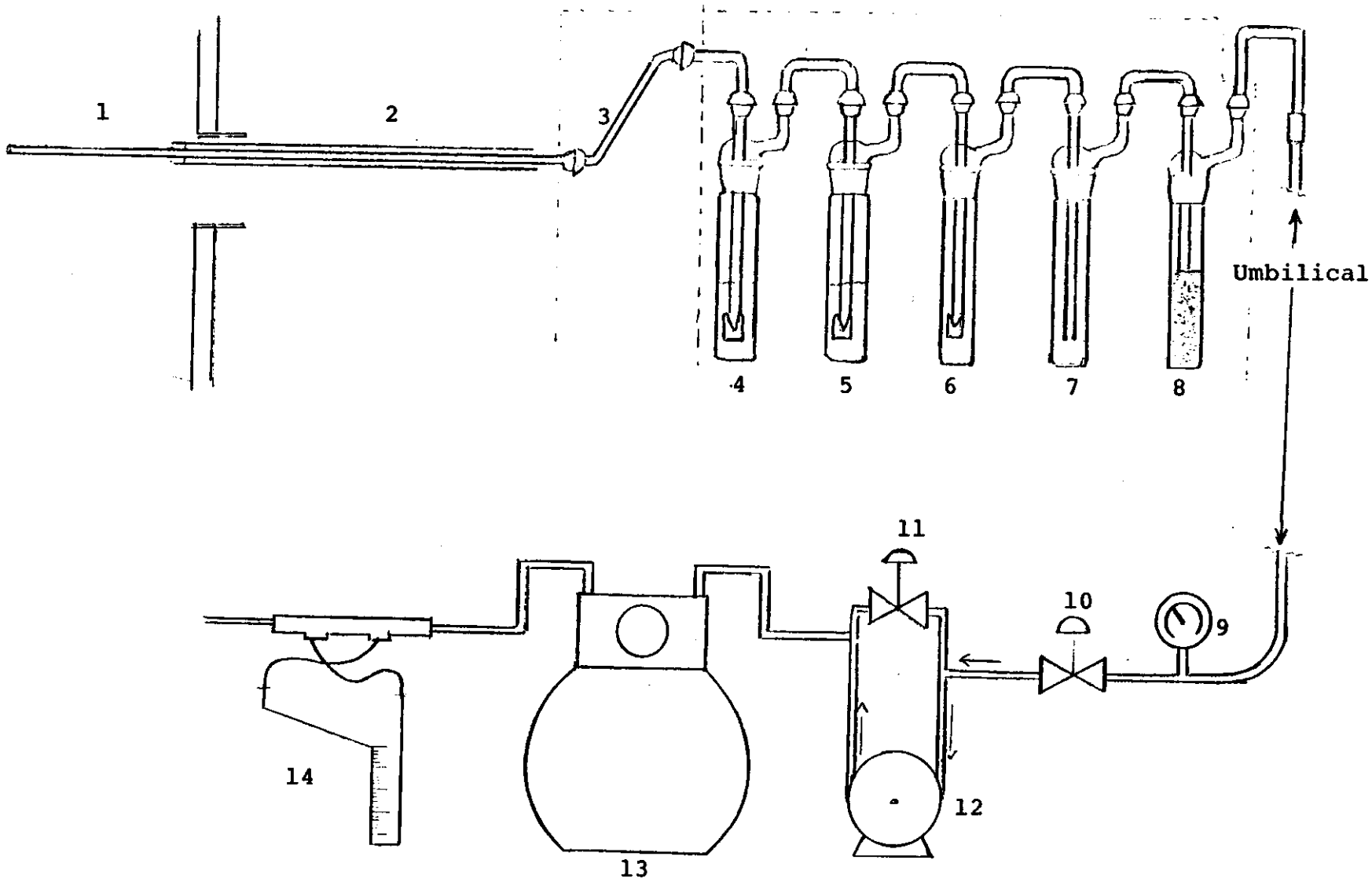

Figure 6-1

Gaseous Sampling Train

recorded and the probe is removed from the stack. If the first impinger contains isopropanol, at least 2.0 ft^3 (meter conditions) of ambient air is drawn through the impinger train to sweep SO_2 out of the first impinger into the second and third impingers. Since a filter and cyclone are usually not used, and since the probe is usually not washed in gaseous sampling, the next step is weighing the impingers as described in Chapter 5. Final impinger weights are recorded on the field data sheets. The contents of each impinger containing an absorbing solution is transferred to clean sample bottles. Blanks of absorbing solutions should be included with the samples. The impingers should be rinsed with DI water and the washings from each impinger transferred to the respective sample bottle. Each bottle should be labeled with unique identification such as plant name, date, stack identification, run number, impinger number, absorbing solution, and pollutant. Samples should be stored and returned to the laboratory using procedures described in Chapter 5. Analysis procedures are discussed in the laboratory manual.

Impinger Trains

The impinger trains are prepared as described below, using DI water and fresh reagents. The volume of each impinger solution should be between 200 and 250 ml.

Some mnemonics are used in the following tables as follows:

GS - Greenburg-Smith
ST - Straight
PB - Perforated bulb
IMP - Impinger

Sulfur Dioxide (SO_2)

IMP	CONTENTS	CAPTURES	IMP TIP
1	80% Isopropanol	SO_3, H_2SO_4	ST or PB
2	6% H_2O_2	SO_2	GS or PB
3	6% H_2O_2	SO_2	GS or PB
4	Dry	H_2O	ST or PB
5	Silica Gel	H_2O	ST or PB

In the impinger train, an impinger containing zinc acetate solution may be included between impingers 3 and 4 to capture H_2S and prevent possible contamination of downstream components. This will not provide an accurate determination of H_2S. Determination of H_2S is discussed later in this chapter. The first impinger (isopropanol) may be omitted when it is not necessary to differentiate between SO_3, H_2SO_4, and SO_2. A 3% H_2O_2 solution (impingers 2 and 3) is sometimes used, but this concentration is marginally adequate for the SO_2 levels (10,000 to 15,000 ppm) often encountered. Although a 10 ft^3 sample (meter conditions) of

10,000 ppm SO_2 stack gas contains approximately 0.1 mole SO_2 while 500 ml of 3% H_2O_2 is 0.5 mole (5:1 excess), deterioration of the H_2O_2 before and during a sample can result in a marginal or no excess of H_2O_2. A higher concentration of H_2O_2 provides a safety factor.

Shell Method (Alternate)

See "Determination of SO_2 and SO_3 in Stack Gas", Emeryville Method 4516-59a (Analytical Department, Shell Development Company, Emeryville, California, 1959). Applicability of this method is essentially the same as the TACB standard method herein described.

Monsanto Company Method (Alternate)

See "Atmospheric Emission from Sulfuric Acid Manufacturing Processes", Public Health Service Publication 999-AP-13 (1965), Appendix B, pp. 67-80. This method is based on the quantitative reaction of SO_2 with I_3^- ion, and is commonly called the Reich test. Since sampling and analysis are accomplished in one rapid operation, it provides an excellent spot check for SO_2 concentration and can even be used directly to calibrate a continuous monitor provided the standardization of the 0.1 N Iodine is frequently verified.

SO_2 Continuous Monitoring (Alternate)

Continuous monitoring methodology is discussed in Chapter 15. Instrumental Field Sampling is discussed in Chapter 7.

Hydrogen Sulfide (H_2S)

Hydrogen sulfide in the stack gas is absorbed in zinc acetate solution and analyzed as described in the laboratory manual. Apparatus and procedures are described earlier in this chapter. D. L. Flamm (Texas A & M University) and R. E. James (TACB) have found that H_2S absorption efficiencies for Greenburg-Smith impingers containing zinc acetate solution are 95-99% at flow rates up to 9.0 lpm (D. L. Flamm, Texas Engineering Experiment Station, Technical Bulletin Number 74-4, October, 1974, pp. 22-37). Above that rate, efficiencies fall off significantly, suggesting that a perforated bulb or EC glass frit should be used and the flow rate should be 0.3 cfm or less (meter conditions). The sampling rate should be proportional to the stack gas velocity, but if the H_2S concentration remains constant throughout sampling, the sample may be taken at a constant flow rate.

IMP	CONTENTS	CAPTURES	IMP TIP
1	0.1 M zinc acetate	H_2S	GS or PB
2	0.1 M zinc acetate	H_2S	GS or PB
3	6% H_2O_2	SO_2	ST or PB
4	Dry	H_2O	ST or PB
5	Silica Gel	H_2O	ST or PB

If high concentrations of SO_2 are present, the zinc acetate impingers will lose a significant amount of H_2S. A DI water impinger may be used in front of the train to absorb SO_2 and keep the major portion of the SO_2 out of the zinc acetate impingers and allow the H_2S to pass to the zinc acetate impingers. Impinger three (H_2O_2) captures the remaining SO_2 to prevent possible contamination of downstream components but will not provide an accurate determination of SO_2.

Hydrogen Fluoride Gas (HF)

The general sampling procedure described earlier in this chapter is used for HF sampling. A filter is used in the heated portion of the sample box to prevent particulate fluoride from entering the impinger train, since gaseous HF is to be determined separately. The temperature of the filter is maintained between 300°F and 350°F.

IMP	CONTENTS	CAPTURES	IMP TIP
1	0.1 N NaOH	Gaseous Fluorides	GS or PB
2	0.1 N NaOH	Gaseous Fluorides	GS or PB
3	Dry	H_2O	ST or PB
4	Silica Gel	H_2O	ST or PB

This train will trap gaseous fluorides in the impingers while particulate fluorides remain on the filter. Reaction of HF with fiberglass filter material precludes use of such filters for particulate fluoride analysis, but the reaction product hydrolyzes in the impinger solution to form stable fluoride ion which can be analyzed as HF. The filter temperature is maintained between 300°F and 350°F to keep entrainment of HF on the filter to a minimum. Sampling for particulate matter in the presence of hydrogen fluoride is discussed in Chapter 5.

Hydrogen Cyanide Gas

IMP	CONTENTS	CAPTURES	IMP TIP
1	0.1 M Zinc Acetate	H_2S, HCN	GS or PB
2	0.1 M Zinc Acetate	H_2S, HCN	GS or PB
3	Dry	H_2O	ST or PB
4	Silica Gel	H_2O	ST or PB

A dry impinger may be included in front of the sampling train to keep heavy organics out of the zinc acetate impingers. Such contamination may complicate analysis if large amounts of heavy organics are present.

Summary of Usual Criteria for Gaseous Sampling

Parameters	Usual Magnitude
Number of samples	3
Sample Volume	10 ft^3 (meter conditions)
Sample Duration	30 min
Manometers	Level and zeroed
Production Rate	±10%
Leak Checks	
Pitot Tubes	≥5" H_2O
Max Leak Rate	Manometer steady for 10-15 sec.
Sampling Train	15" Hg or ≥ Max vacuum
Max Leak Rate	0.02 cfm or 4% of flow rate
Max Leak Correction	10% of sample volume
Purge (if neccessary)	2 ft^3
Blanks of impinger solution	Necessary

Nitrogen Oxides (NO_x)

Standard Method

Nitric oxide (NO) or nitrogen dioxide (NO_2) in stack gas is collected in a volumetrically calibrated glass flow-through type bomb which is injected with an absorbing solution immediately following collection of the sample. If absorbing solution is not injected immediately, the sample may be lost. This method may not be substituted where EPA Method 7 is required.

In the presence of oxygen, water-insoluble NO slowly oxidizes in the gas phase to NO_2, which is soluble in aqueous systems. Disproportionation to NO and NO_3 occurs when NO_2 dissolves in water. During this reaction the NO is being continually oxidized until for all practical purposes only NO_3 is present. Initial oxidation of NO to NO_2 is the ratelimiting reaction and requires 12 to 16 hours to go to completion.

Inorganic nitrates, nitrites, or organic nitrogen compounds easily oxidized to the nitrate ion may interfere to give high results. Reducing agents such as SO_2, when present in high concentrations, may interfere by reacting with the hydrogen peroxide in the absorbing reagent to leave an insufficient amount of peroxide for reaction with the nitrogen oxides. Halides, if present, tend to interfere and give lower results.

Apparatus

Sample Bomb: Pyrex glass, 500-2000 ml volume, cylindrically shaped and having stopcocks at each end (Figure 6-2). A flask with an inlet purge tube is also acceptable (Figure 6-3). The volume of each sample bomb or flask must be known to ±1%.

Probe: A 1/4 inch to 3/8 inch O.D. tube of Pyrex glass or 316 stainless steel is adequate for a probe. Probe-to-bomb connections should be made with glass or Teflon. For coal-fired boiler sampling, a sintered stainless steel filter should be attached to the in-stack end of the probe.

Temperature Gauge: Calibrated metal stem thermometer or standard thermocouple. A stem thermometer or standard thermocouple taped to the sample bomb is acceptable. A more accurate temperature may be obtained if the bomb is insulated.

Barometer: Mercury, aneroid, or other barometer capable of measuring atmospheric pressure to within ±0.1 inch Hg (2.5 mm Hg). The barometric pressure is necessary to calculate NO_x gas volume from moles NO_3^-.

Water Trap: If the stack gas contains enough moisture to cause condensation in the bomb, a water trap should be inserted upstream of the bomb. Hot stack gas may need to be cooled with a cooling coil for moisture to be removed. Silica gel or other drying agents must not be used in the water trap.

Pump: A small battery-powered pump is usually adequate.

Syringe: 25 to 50 ml, all plastic with no metal needle. Positive interference in the spectrophotometric analysis due to reaction of the absorbing solution with chromium and iron in the needle must be prevented. A small piece of surgical tubing should be used to connect the syringe to the bomb neck for injection of absorbing solution.

Rotameter: 1-10 lpm for measuring sample flow rate.

Chemicals

Distilled or deionized (DI) water.
Absorbing solution (0.1 M H_2O_2 in 0.05 M H_2SO_4) is prepared by adding 2.8 ml concentrated H_2SO_4 and 10.0 ml 30% H_2O_2 (≃10 M) to 500 ml DI water and diluting to 1.0 liter with DI water.

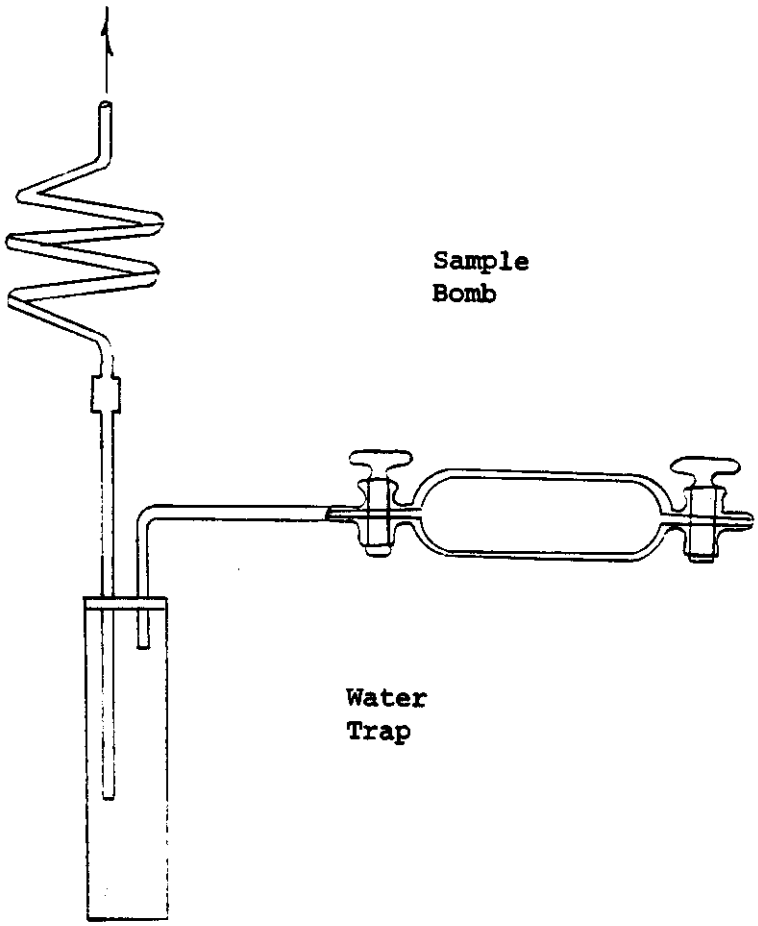

Figure 6-2
Sampling Train For NO_x

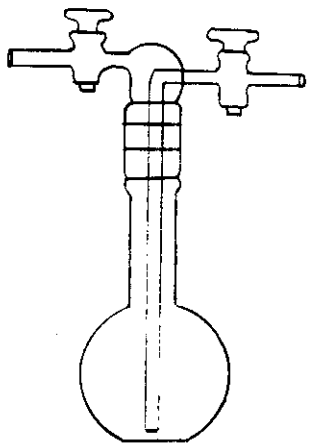

Figure 6-3
Flask-Type Sampling Vessel

Sampling Procedure

If adequate positive pressure exists in the stack or duct, the apparatus is assembled as shown in Figure 6-2. A filter may be necessary if the stack gas contains particulate matter. For each sample, the sample bomb should be purged with at least 10 times the volume of the bomb. A rotameter may be necessary downstream of the bomb to insure adequate purging. At the end of the sampling period, the stopcock on the downstream side of the bomb is closed first, then the other stopcock is closed and the bomb disconnected.

If stack pressure is near ambient or negative, a pump downstream of the bomb should be used to draw the sample through the bomb. After approximately 10 bomb volumes of stack gas have been drawn through the bomb, the stopcock nearest the pump is closed and the gas in the bomb is allowed to equilibrate to stack pressure; then the other stopcock is closed. A rotameter may be necesary downstream of the bomb to insure adequate purging. Sampling data is recorded on data forms (Appendix D). As soon as possible after sampling, 25 ml of absorbing solution is injected into the bomb with the syringe through a small piece of surgical tubing connecting the bomb and the syringe. The barometric pressure, temperature of the bomb, and time the sample was taken should be recorded. The bomb should be shaken for at least two minutes. After 12 hours but before 24 hours after sampling, the bomb is again shaken for at least two minutes and the absorbing solution is recovered from the bomb and treated with 1.0 N NaOH to stabilize the NO_3^- ion.

If condensation of moisture occurs in the sampling system, two bombs should be used in series so the front bomb can be checked for possible absorption of NO_2. If the first bomb indicates that absorption of NO_2 may have occurred in other parts of the sampling train this method is not suitable for an accurate NO_x determination.

If a NO_x pollutant mass rate (PMR) calculation is to be done, the following parameters must be determined: stack gas temperature, stack gas velocity, stack gas moisture content, and stack internal diameter at the same location that velocity measurements are made. If effective stack height is needed, stack height and exit diameter are necessary. If only a NO_x concentration is needed, this data is not necessary. Continuous monitor data should be obtained if available. Stack gas moisture content and stack gas velocity determinations are discussed in Chapters 4 and 5. A stack gas moisture content is needed if an actual (wet basis) NO_x concentration is to be calculated.

The moisture content of the bomb (BW_B) is necessary for accurate calculations. The temperature of the bomb can be used to obtain BW_B if the bomb is saturated; if not, other methods such as wet bulb and dry bulb temperatures are necessary. Bomb temperature and ambient temperature approach each other with increasing condenser length; however, bomb exit dry bulb temperature is the more exact temperature to be used for BW_B if the bomb is saturated or if wet bulb and dry bulb temperatures are used.

A total of 12 samples should be taken at 15 minute intervals. Data reduction is discussed in Chapter 8. EPA Method 7 may be used as an alternative and is described in the Federal Register.

Organic Compounds

Chapter 7 contains discussion of techniques and considerations for sampling gaseous organic compounds. Some discussion and references are also presented in Appendix J.

CHAPTER 7

INSTRUMENTAL FIELD SAMPLING

THIS CHAPTER IS IN PREPARATION AND UPON COMPLETION WILL BE ISSUED TO ALL SPM RECIPIENTS OF RECORD. ALTERNATIVE INSTRUMENTAL METHODS FOR STACK AND/OR GROUND LEVEL SAMPLING (GAS CHROMATOGRAPHY, AMBIENT EQUIVALENT REFERENCE METHOD ANALYZERS, ETC.) SHOULD BE SUBMITTED TO THE TACB FOR REVIEW AND APPROVAL ON A CASE-BY-CASE BASIS PRIOR TO USE (SEE CHAPTER 1, SAMPLING OVERVIEW).

CHAPTER 8

DATA REDUCTION

Overview

This chapter describes procedures for reducing stack sampling field data and laboratory analysis results to volumetric flow rate and pollutant mass rate for isokinetic stack sampling, proportional stack sampling, and bomb sampling. References are provided for additional information on ground level sampling data reduction, raw data, allowable emission rates, and other special cases such as emission peaks and excess air corrections.

Allowable Emission Rates

In many cases data reduction information provides the basis for calculating applicable allowable emission rates and other parameters such as effective stack height. These items should be included in sampling reports (see Chapter 14) and are usually described in the applicable regulation. Only certain special cases are discussed in this chapter.

Data Reduction References

Routine data reduction procedures are discussed in this chapter, but in some cases unique situations are encountered where routine procedures are not applicable. Some of these cases and references follow:

Excess Air - Appendix I
F Factors - Appendix L
Emission Peaks - Appendix G
Cyclonic Flow - Appendix H

Stack Sampling Data Reduction

Several of the parameters necessary for final data reduction of a sample were also necessary as preliminary information for the sample. These are calculated in the same manner as in the preliminary calculations, but are now calculated using the information obtained during the sample rather than preliminary information.

Moisture Fraction

The moisture content of the stack gas is calculated from the weight gain of the the impingers. The impinger weight gain may contain particulate

matter and other gases as well as water vapor. After subtracting the weight gain in the impingers that is not water from the total impinger weight gain, the moisture fraction is calculated on a volume or mole basis as shown both in Chapter 4 and the Preliminary Moisture Determination in Appendix D.

As discussed in Chapter 4, saturated conditions may exist in the stack gas if the stack gas temperature is below the boiling point of water. The moisture fraction at saturated conditions (Chapter 4) is also determined in addition to the moisture fraction mentioned above, and the smaller of the two is used in subsequent calculations.

Orsat Correction and Molecular Weight

Orsat analysis for molecular weight is discussed in Appendix F, with calculations described in Chapter 4. Certain carbon dioxide absorbing solutions will also absorb sulfur dioxide. If this occurs, the fraction of sulfur dioxide in the stack gas is subtracted from the orsat carbon dioxide fraction obtained in the field. The corrected molecular weight is then calculated by the same weighted sum procedure shown in Chapter 4 and Appendix D with the fraction and molecular weight of sulfur dioxide included in the weighted sum.

Flow Rate

Average velocity (AVEL) is calculated as described in both Chapter 4 and the Preliminary Velocity Determination form in Appendix D with the corrected molecular weight from above and the velocity head (ΔP) readings obtained during the sample. The average stack gas velocity calculation in Chapter 4 and Appendix D uses average square root of ΔP and average temperature. The technically correct procedure is to calculate a velocity from each ΔP and temperature reading and then average the velocities; however, the average input method is usually acceptably accurate. Actual flow rate in cubic feet per minute (ACFM) is the product of the average stack gas velocity and the stack cross-sectional area, with consistent units maintained.

The actual flow rate (ACFM) can be changed to a flow rate at standard conditions (SCFM) by use of the ideal gas law. Certain regulations require ACFM for calculation of allowable emission rate, while others require SCFM. ACFM includes the volume of water vapor that exists in the stack gas at actual conditions, therefore SCFM, as calculated from ACFM, also includes the same water vapor that was in the stack gas at stack conditions (unless dry standard conditions are specified), even though that amount of water vapor may not physically exist at standard conditions.

Nozzle Volume

Nozzle volume at stack conditions (NVSC) is the volume in actual cubic feet that passes through the sampling nozzle during the sample. NVSC is calculated as follows:

$$NVSC = \frac{\left[VDG + 0.04804 \frac{TM2}{PM2} \sum_{i=1}^{n} \left(\frac{Q_i}{MWT_i}\right)\right](TS2)\ (PM2)}{(TM2)(BDG)(PS2)}$$

$$NVSC' = \frac{\left[VDG' + 8.268 \frac{TM2'}{PM2'} \sum_{i=1}^{n} \left(\frac{Q_i}{MWT_i}\right)\right](TS2')(PM2')}{(TM2')(BDG)(PS2')}$$

where NVSC = nozzle volume at stack conditions (ft^3)
VDG = dry gas meter volume (ft^3)
Q_i = mass of gas i caught in the impingers (g)
MWT_i = molecular weight of gas i
TM2 = absolute meter temperature (°R)
PM2 = absolute meter pressure (inches Hg)
BDG = dry gas fraction (1.0 - moisture fraction)
TS2 = absolute stack temperature (°R)
PS2 = absolute stack pressure (inches Hg)

Prime marks indicate metric units as follows:

VDG' and NVSC' - (m^3)
TS2' and TM2' - (°K)
PS2' and PM2' - (pascals)

Water caught in the impingers is not included in the summation of the Q_i gases. Water vapor in the stack gas is accounted for by the dry gas fraction (BDG) in the denominator since the mass of water caught in the impingers can indicate more water vapor than is present if the stack gas is saturated.

Isokinetic Pollutant Mass Rate

Two procedures for the calculation of pollutant mass rate (PMR) are the concentration approach and the area ratio approach. Both procedures

yield accurate results with 100% isokinetic sampling, but have different errors when sampling is not 100% isokinetic. The concentration approach is applicable to small particles that follow the flow stream, and the area ratio approach is applicable to large particles that may not follow the flow stream. An indication of the distribution of large and small particles may be seen from a comparison of the mass of particulate matter caught in the probe wash and cyclone (large) with the mass caught on the filter and in the impingers (small), but this comparison should not be considered as an absolute determination of particle distribution.

With improving abatement devices, most samples of particulate matter will likely contain a larger proportion of small particles than large particles. When this is true, calculation of PMR by the concentration approach (PMRC) results in a smaller possible error than using the area ratio (PMRA) or the average of PMRA and PMRC. When definite knowledge exists about the distribution of the particles, such information should be used in deciding whether to calculate PMR by PMRC, PMRA, or the average. Otherwise, PMRC should be used.

Pollutant mass rate based on concentration is calculated as follows:

$$PMRC = \frac{(DS)^2(AVEL)(MPC)(6.233)}{NVSC}$$

$$PMRC' = \frac{(DS')^2(AVEL')(MPC)(0.7854)}{NVSC'}$$

Pollutant mass rate based on area ratio is calculated as follows:

$$PMRA = \frac{(DS)^2(MPC)(0.1039)}{(AN)(TIM1)}$$

$$PMRA' = \frac{(DS')^2(MPC)(0.7854)}{(AN')(TIM1')}$$

where PMRC = PMR based on concentration (lb/hr)
PMRC' = PMR based on concentration (gm/sec)
PMRA = PMR based on area ratio (lb/hr)
PMRA' = PMR based on area ratio (gm/sec)
DS = stack diameter at ports (ft)
DS' = stack diameter at ports (m)
AVEL = average stack gas velocity (ft/sec)

AVEL' = average stack gas velocity (m/sec)
MPC = total mass of pollutant caught (g)
NVSC = nozzle volume at stack conditions (ft^3)
NVSC' = nozzle volume at stack conditions (m^3)
AN = area of nozzle (ft^2)
AN' = area of nozzle (m^2)
TIM1 = sample time (min)
TIM1' = sample time (sec)

Calculation of in-stack concentration is an intermediate result of the above calculations and may be obtained by dividing MPC by NVSC and changing to the appropriate units.

Isokinetic Check

The percent isokinetic is recalculated after refinements described earlier are made to the nozzle volume and velocity calculations. The same equation is used for the recalculation as was used for the field check of percent isokinetic (Appendix D forms). If the percent isokinetic is not within the range of 90-110%, the sample is not acceptable.

Gaseous Pollutant Mass Rate

Proportional gaseous sampling data reduction is the same as isokinetic sampling data reduction except that the PMR is based on concentration only. The equation for the percent isokinetic check can also be used to calculate the proportionality percentage.

The flow-through bomb sampling technique for NO_X sampling is described in Chapter 6. Knowledge of the moisture content of the bomb BW_B at the time of sampling is necessary for accurate data reduction. The NO_X concentration in PPM on a dry basis is calculated as follows:

$$\text{PPM } NO_X \text{ dry} = \frac{(1.36 \times 10^3)(M)(TB)}{(1-BW_B)(MWNOX)(V)(PA)} = \frac{(8.32)(M)(TB')}{(1-BW_B)(MWNOX)(V')(PA')}$$

where BW_B = bomb moisture fraction
MWNOX = molecular weight of NO_X
V = bomb volume (ml)
M = mass of NO_X in sample (μg)
PA = atmospheric pressure (inches Hg)
TB = bomb temperature (°R)
PPM = parts per million
TB' = bomb temperature (°K)
PA' = atmospheric pressure (pascals)
V' = bomb volume (m^3)

Normally, the value of BW_B should be the moisture fraction at saturation at ambient (or bomb) temperature if the stack gas passes through a cooling coil and/or water collection before entering the bomb. BW_B may be read from a psychrometric chart (Chapter 4) in such cases. In other cases, a different means of determining BW_B is necessary, such as wet bulb/dry bulb temperatures measured during the purge. Neglecting BW_B results in an indication of a lower dry PPM of NO_X than exists.

The NO_X pollutant mass rate may be calculated from the dry PPM of NO_X. The stack gas moisture fraction (BW_S) and flow rate (ACFM) must be known; measurement of these parameters is discussed in Chapters 4 and 5 and earlier in this chapter. The NO_X PMR is calculated as follows:

$$NO_X \text{ PMR} = (2.75 \times 10^{-6})(\text{ACFM})(1 - BW_S)\left(\frac{PS2}{TS2}\right)(\text{dry PPM } NO_X)(\text{MWNOX})$$

$$NO_X \text{ PMR}' = (1.2 \times 10^{-7})(\text{ACMS})(1 - BW_S)\left(\frac{PS2'}{TS2'}\right)(\text{dry PPM } NO_X)(\text{MWNOX})$$

where ACFM = stack gas flow rate (actual ft^3/min)
BW_S = stack gas moisture fraction
PS2 = absolute stack gas pressure (inches Hg)
TS2 = absolute stack gas temperature (°R)
NO_X PMR = NO_X pollutant mass rate (lb/hr)
ACMS = stack gas flow rate (actual m^3/sec)
PS2' = absolute stack gas pressure (pascals)
TS2' = absolute stack gas temperature (°K)
NO_X PMR' = NO_X pollutant mass rate (grams/sec)

Averaging Results

All of the data for each sample are reduced separately. Average results are then calculated by averaging the results (PMR) of all the valid samples. The average PMR is compared with all applicable average allowable emission rates or standards; e.g., TACB Regulations, TACB permits, New Source Performance Standards, etc.

Multiple Sources Vented Through One Stack

When more than one process is vented through one stack the sampling is done with standard procedures, but additional information is necessary to calculate the allowable emission rate. The portion of the flow rate from each process must be known or determined when the allowable emission rate is based on flow rate. The allowable emission rate for the stack is then the sum of the allowable emission rates calculated from the flow rate from each process. The procedures for calculation of allowable emission rates specified by other applicable regulations or standards are also used if different from the above procedure.

Calculation of effective stack height and standard effective stack height is done using actual stack parameters and total flow rate. If different type processes are vented through the stack, standard effective stack height is calculated with the most restrictive equation specified for the different processes. The most restrictive equation is the one that produces the highest standard effective stack height.

Multiple Stacks from One Process

When one process is vented through more than one stack, the pollutant mass rate (PMR) from the process is the sum of the PMR from the separate stacks. Simultaneous sampling of the separate stacks may be avoided if the combined process exhaust can be sampled at another location or if it is demonstrated that all respective dimensions and parameters of the separate stacks are equal. In the latter case, sampling of one of the identical stacks may, in some cases, be acceptable. After normal data reduction on all simultaneous samples, the individual PMR of the simultaneous samples are added to yield the PMR of the process for that sampling period. For example, the PMR of the process during the time of sample number one is the sum of the individual simultaneous number one samples. The process PMRs are then averaged to yield the average PMR for the process in the same manner that samples (usually three) are averaged for a single stack.

Allowable emission rates based on flow rate are calculated from the sum of the flow rates from the individual stacks. Allowable emission rates based on parameters other than flow rate, and other stack parameters such as standard effective stack height, necessitate further calculation. Numerous scenarios are possible and, in the course of such calculations, certain assumptions may be necessary to solve some specific calculations. Any treatment of this problem must follow good engineering practice; one such method is outlined in the following paragraph.

The mixing temperature, T_m, for a hypothetical stack that would carry all of the individual flows is calculated from a heat balance; i.e., total heat content before mixing is equal to total heat content after mixing.

$$\frac{(MFR_1)(T_1) + (MFR_2)(T_2) + \ldots\ldots}{MFR_1 + MFR_2 + \ldots\ldots}$$

where MFR = individual mass flow rate
T = individual absolute temperature

Mass flow rate of each stack gas stream is obtained from the molecular weight, flow rate at standard conditions, and mole volume at standard conditions of each individual flow stream. The specific heats of the separate gas streams are assumed to be equal; comparison of the molecular weights of the separate streams may be an indication of this

equality. The diameter of the hypothetical stack is such that the cross-sectional area of the hypothetical stack is the sum of the individual stack cross-sectional areas. This diameter (area) is used with the total flow rate to calculate the stack gas velocity in the hypothetical stack. The hypothetical stack approach may not be appropriate for calculation of effective stack height. If the individual stacks do not have the same physical stack height, an ACFM weighted average physical stack height is used in the calculations.

Ground Level Sampling Data Reduction

Ground level sampling data reduction is explained on the Field Data and Data Reduction for Ground Level Sampling form found in Appendix D. Ground level sampling is discussed in Chapters 9-12. The three forms for ground level sampling are:

- Field Data for Ground Level Sampling
- Laboratory Data for Ground Level Sampling
- Data Reduction for Ground Level Sampling

The field data sheet is designed for either an upwind or a downwind sampler (one for each sampler). Each single, unpaired sampler will need one data reduction form, such as when a zero upwind concentration is used in calculations. Each pair of upwind-downwind samplers will need one data reduction form.

The average barometric pressure and average ambient temperature during sampling are calculated and recorded on the data reduction form along with the manometer (or rotameter) readings and total sample time. The filter weight gain is transferred to the data reduction form from the laboratory data form. Calibration pressure and temperature are found on the calibration graph or on the tabulated calibration data sheet.

The manometer (or rotameter) readings are used to obtain corresponding flow rates at calibration conditions from the graph or tabulated calibration data. The flow rates are averaged and multiplied by total sample time to yield the uncorrected sample volume. The equation for calculating the sample volume at field conditions is shown on the data reduction form. This volume may be converted from cubic feet to cubic meters by multiplying by 0.02832 m^3/ft^3. Filter weight gain in micrograms is divided by the sample volume in cubic meters at field conditions to obtain the respective concentration in $\mu g/m^3$. Upwind concentration is subtracted from downwind concentration for each pair of samplers to obtain the net downwind concentration for each pair of samplers.

CHAPTER 9

GROUND LEVEL SAMPLING EQUIPMENT

General

Ground level sampling is the procedure used to determine net ground level pollutant concentration. This concentration is determined by subtracting the upwind pollutant concentration from the downwind pollutant concentration.

Particulate Matter Sampling Equipment

High volume air sampling is the method used to determine ground level concentrations of particulate matter.

The following equipment is needed to obtain a high volume air sample:

1) 110 volt power source
2) Calibrated high volume air samplers with air flow measuring devices
3) Appropriate preweighed filters
4) Protective cards and envelopes to transport filters
5) Anemometer and compass to indicate wind speed and direction
6) Temperature and barometric pressure measuring capability
7) Data sheets (see Appendix D)

High Volume Air Sampler (Hi-Vol)

Hi-vols consist of a faceplate and gasket, a filter adapter assembly, and a blower motor unit in a suitable shelter as shown in Figure 9-1. The sampler must be capable of passing air through a clean 8 by 10 inch filter at a rate of at least 60 ft^3/min. The sampler should have a proper shelter; a hood hinged to the filter adapter assembly will usually suffice.

Air is drawn into the covered housing and through the filter by means of a high flow rate air mover. Particulate matter larger than a specified size (depending upon the type of filter) is retained upon the filter. Preweighed glass fiber filters capable of collecting particles 0.3 micrometer (micron) and larger are normally used. Air flow through the sampler is measured by a rotameter, manometer, or equivalent flow measuring device. Hi-vol calibration is discussed in Appendix C. Manometers are preferred over rotameters for flow rate measurement due to the measurement of differential pressure rather than a portion of the flow.

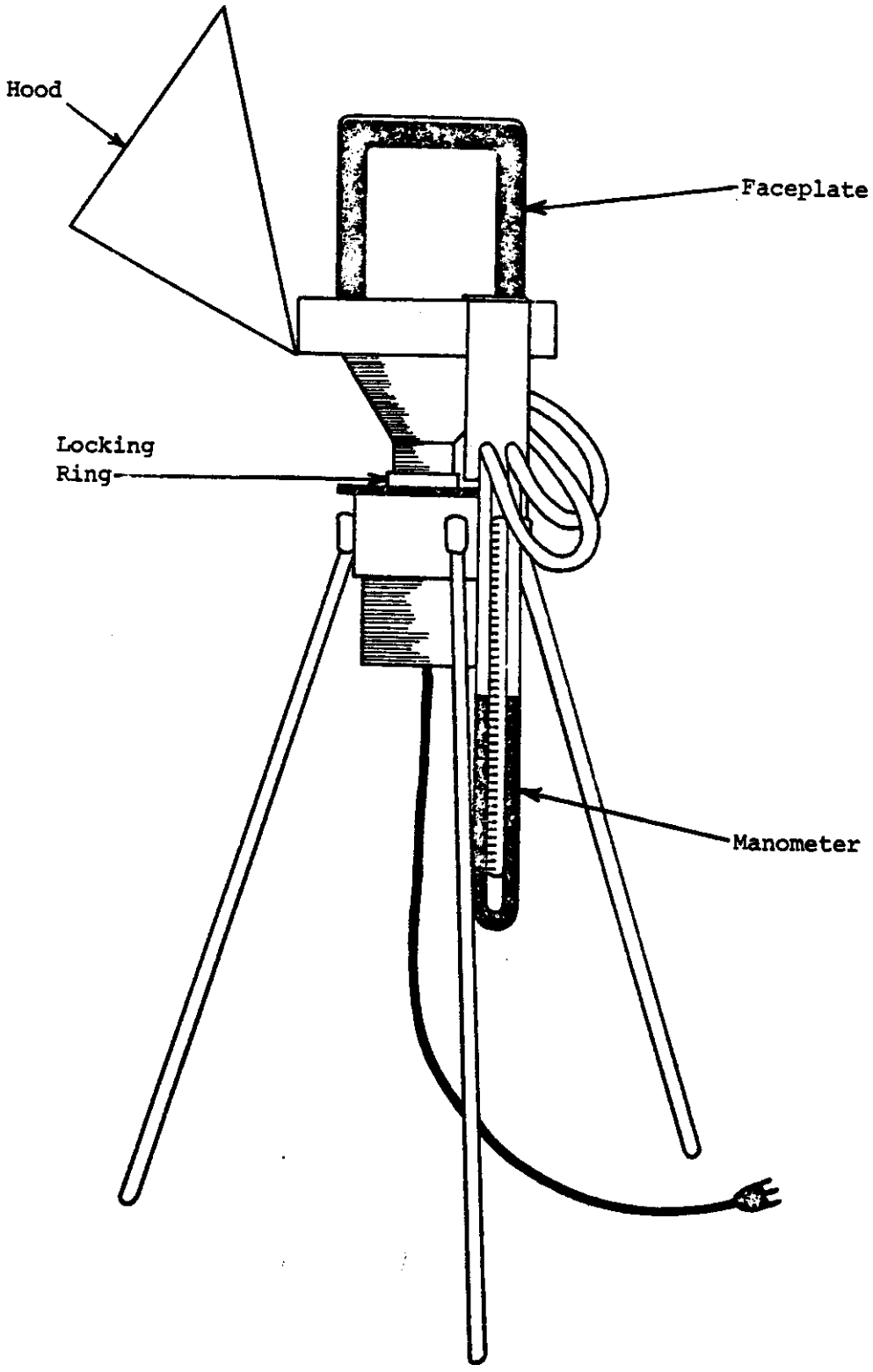

Figure 9-1
Hi-Vol With Hood and Faceplate Raised

Filters

Glass fiber filters capable of a collection efficiency of 99% for particles 0.3 micron in diameter and larger are suitable for the quantitative measurement of concentrations of particulate matter. These filters are selected because of low concentrations of nitrates, sulfates, ammoniates, fluorides, and benzene soluble materials in the filter material.

Oily particulates may block the filter and cause a rapid drop in air flow at an irregular rate. High humidity can cause the filter to become wet and may severely reduce the air flow through the filter. The strong hygroscopic properties of some compounds such as ammonium sulfate can affect weight measurements. In order to minimize the weight effects of humidity, filters are equilibrated before weighing as discussed in the laboratory manual.

Filters other than glass fiber may be used for certain samples where specialized analyses are desired. Cellulose filters should be used for the determination of low concentrations of trace metals by X-ray fluorescence (XRF) analysis because standard glass fiber filters contain percentages of heavy elements, e.g. barium and strontium, high enough to interfere with this analysis. A problem associated with the use of cellulose filters results from the hygroscopic nature of the cellulose fibers which causes swelling of the fibers and increased pressure drop. Another problem with cellulose filters is the high percent weight change per percent relative humidity change. This problem requires special equilibration which is discussed in the laboratory manual.

Prior to use in the field, filters should be inspected for flaws, pinholes, etc. A light table is normally used to detect pinholes. Filters found to be acceptable are numbered for identification. The filters are then equilibrated and weighed to the nearest milligram.

Gaseous Sampling Equipment

The majority of gaseous pollutants are sampled for net ground level concentrations by bubbling a measured volume of ambient air through an impinger containing an absorbing reagent which will react with or absorb the suspected pollutant. Treated filters are also used in some cases. The standard gaseous sampling train is as follows: pre-filter to filter out any particulate matter which may interfere with the analysis (0.8 μm pore size membrane filters in plastic filter holders are commonly used), impinger and/or treated filter, flow meter, and pump. Specific sampling trains are described in the chapter on ground level sampling for gases. Portable hand-held battery powered pumps with built-in rotameters are normally used. A typical gaseous sampling train is shown in Figure 9-2. Calibration of gas samplers is discussed in Appendix C.

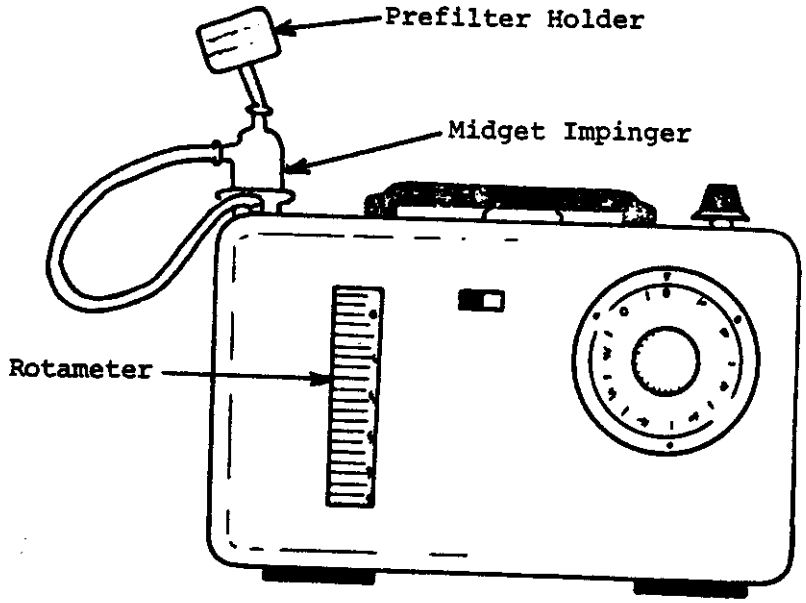

Figure 9-2
Typical Gaseous Sampling Instrument

CHAPTER 10

GROUND LEVEL SAMPLING PRELIMINARY PROCEDURES

General

Atmospheric conditions are an integral part of ground level sampling. Proper weather conditions are necessary for representative ground level sampling. Since the atmosphere is the vehicle that transports the pollutants, necessary conditions may not be present at any one particular time. Specific sampling situations may necessitate specific atmospheric conditions and/or site locations. These situations include property line layout, topography, or individual sampling requirements such as permit provisions, etc.

Site Selection

Selection of the sampling sites is a critical phase of the sampling since the sampling equipment should not be moved during sampling. The property lines of the property must be determined. The upwind sampler is located at a position representative of air contaminants flowing onto the property. The downwind sampler must be representative of the maximum level of emissions at or beyond the property line; however, samplers must not be located such that any significant source other than that being sampled may affect the sample. More than one downwind sampler may be used to demonstrate that the maximum downwind concentration is determined. Limits on net ground level concentration (NGLC) normally state that the NGLC shall not exceed a specified concentration. The sampler indicating the highest downwind concentration must therefore be used in obtaining the maximum NGLC.

The samplers should be free from any local effects due to trees, ground dust, grass, buildings, etc. unless such effects are the purpose of the sampling. The primary consideration is the representativeness of the sample. The samplers should be placed at a height that is representative of the ground level concentration, normally up to 15 feet. No rigorous treatment of boundary layers which may exist between surfaces and moving particles is attempted here, but in light of such considerations, samplers should not normally be located below a height of three feet.

Individual sampling requirements may preclude the use of some of these standard procedures. Necessary justification must be provided in such cases.

Air contaminants flowing onto the property are included in the upwind sample only to the extent that they are reflected in the downwind sampler. Exact amounts may not be quantifiable, but judicious placement

of the samplers in such instances must be attempted. If upwind samplers are located on the property, placement must be such that plant emissions are avoided.

Weather

Weather conditions should be observed for a while before sampling is begun to determine whether a representative sample is possible with existing conditions. Sampling during or shortly after rain may not be representative due to lower than normal pollutant concentrations. Sampling during abnormally high winds may not be representative due to higher than normal pollutant concentrations. Sampling during calm conditions may not be representative due to emissions not being blown from the property as during normal conditions. Again, the primary consideration is the representativeness of the sample compared with the specific purposes of the sampling.

Sampling should not be started if fluctuations in wind direction prevent one location from being continuously downwind. Likewise a sample should normally be terminated if a wind shift occurs which leaves the downwind sampler no longer downwind. Windshifts normally introduce a low bias to the downwind sampler and may or may not affect the upwind sampler. Such biasing effects are evaluated in the field and a sample need not be terminated if the purpose of the sampling is satisfied considering all biasing effects. Detailed documentation of events and possible effects is necessary in such cases.

Plant Operation

The operational status of the source during sampling should be recorded. This information may be used in documenting the conditions of which the samples are representative.

CHAPTER 11

GROUND LEVEL SAMPLING FOR PARTICULATE MATTER

General

The net ground level concentration of particulate matter from a property is measured by simultaneous upwind and downwind sampling using calibrated high volume air samplers (hi-vols). Ground level sampling equipment and sampling site location are discussed in previous chapters. Calibration of ground level sampling equipment is discussed in Appendix C. Contents of ground level sampling reports are detailed in Chapter 14.

Preparation

The inside of the hi-vols should be inspected and cleaned as necessary. Portable generators are usually necessary and must be set up so as not to affect the sample. The samplers are placed so that the collection surface is not over 15 feet above ground level but high enough to avoid contamination or ground effects and insure a representative sample. The generators must always be downwind of the samplers. If ground dust or other material is present around the sampling sites such that the downdraft from the hi-vols or other local disturbance may create interferences, the hi-vols should be placed on ground covers (cardboard, plastic, etc.) to eliminate the interferences. The locking ring around the throat of the hi-vols should be checked and tightened if necessary.

Manometers must be zeroed and the tubing checked for leaks. Leak checks are made by applying a positive pressure of approximately 10 inches of water to the tubing on the side of the manometer to be exposed to positive pressure. The manometer level must remain steady for five seconds with the tubing pinched. The procedure is repeated with approximately 10 inches of vacuum on the side of the manometer to be exposed to negative pressure.

Generators should be started about five minutes before the beginning of the sample to allow for warm-up. A clean filter is placed with its collection surface up on the filter support screen and secured with the faceplate. The faceplate should be snug enough to prevent leakage, but not so tight that the filter is damaged.

Sampling Procedure

Upwind and downwind samplers are started simultaneously and the initial flow rate is set. The flow rate should normally be maintained between 40 cfm and 60 cfm. In certain cases, other flow rates may be necessary

for a specific application. The flow rate may either be kept constant throughout the sampling period or be allowed to decrease as the filter is loaded.

Flow rate readings during ground level sampling are recorded at uniform time intervals throughout the sampling period. Emission peaks or flow rate adjustments may occur which can produce non-uniform loading of the filter and/or non-uniform changes in flow rate with respect to time. Therefore, time weighting of flow rate during data reduction may be necessary for representative results. Flow rates recorded at uniform time intervals will provide the necessary time weighting. Other means of hi-vol flow rate control and/or recording such as flow rate controllers and/or chart recorders are encouraged since constant flow rate and/or continuous recording may facilitate more accurate averaging.

Field data and data reduction forms for ground level sampling are provided in Appendix D. Space is provided on the field data sheet for a sketch to indicate the location of the sampler and the surroundings. Any conditions during the sample that may affect the sample should be noted. All data blanks on the field data form should be completed including recording of flow rate at uniform time intervals and associated data such as wind direction. Items to be included in ground level sampling reports are discussed in Chapter 14.

Flow rate readings should not be taken until the sampler has run for at least 5 minutes to allow for warm-up. Flow rate readings are made at intervals not longer than 30 minutes. A suggested pattern of flow rate readings is at 15, 45, 75, etc. minutes into the sample so that each flow rate reading is representative of a 30 minute period of the sample. Shorter intervals may be necessary for one-hour samples.

More than one downwind sampler may be used to further document levels of downwind concentrations from a property. The existence of lower levels will serve as verification that the maximum downwind concentration was obtained for comparison with the applicable regulation. Site selection is discussed in Chapter 10.

The hi-vol should not be moved or adjusted during the sample except for necessary flow rate adjustments. The sampler must be attended throughout the sample to insure there are no occurrences to invalidate the sample; however, in some cases special consideration may be given to the use of automated sampling stations. Any situations or occurrences that may affect the sample should be documented in the field notes. Movements in the vicinity of the sampler should be minimized, particularly if the area around the sampling site is dusty.

Samples should be continuous but coordinated shut-down of both the upwind and downwind samplers may be made in cases of malfunction, refueling, or other unavoidable instances. The primary consideration is the representativeness of the sample.

Proper weather conditions are an integral part of ground level sampling and samples should be terminated and voided in cases of precipitation during the sample or wind shifts which leave the downwind sampler no longer downwind. Windshifts normally introduce a low bias to the downwind sampler and may or may not affect the upwind sampler. Such biasing effects are evaluated in the field and a sample need not be terminated if the purpose of the sampling is satisfied considering all biasing effects. Detailed documentation of events and possible effects is necessary in such cases.

Indications of the representativeness of the sample should never be ignored. One such indication can be the outline of particulate matter around the edge of the filter at the end of the sample. If the outline is not straight and clear, leakage around the gasket may have occurred and biased the sample. Results may be biased high, low, or indeterminately depending on whether the bias is on the upwind or downwind sampler or both.

Documentation of the suitability of the sampler locations by photograph is desirable. Each photograph should be identified with date, time, name of facility, location of the sampler, and directions in photograph (north, west, etc.).

Sample Completion

At the end of the sampling period, the samplers are disconnected from their power supplies and the faceplates are removed. Insects on the filters should be removed without damaging the filters or disturbing the particulate matter on the filters. This may be done with tweezers or by allowing them to fly away. The filters are then folded lengthwise with the collection surface inward, placed in protective cards, and then placed inside sample envelope, which are then sealed and signed. Whenever the filters change hands, signatures, dates, and times should be recorded.

Procedures for equilibrating and weighing filters are discussed in the laboratory manual. Data reduction is discussed in Chapter 8.

Other Analyses

Standard high volume air sampling may also be used to collect other pollutants. Among these are benzene solubles, beryllium, arsenic, and particulate chlorides. The sampling procedure is the same as has been described in this chapter and analysis procedures are discussed in the laboratory manual.

CHAPTER 12

GROUND LEVEL SAMPLING FOR GASES

General

Gaseous pollutant concentrations are normally determined by bubbling ambient air through an absorbing solution. In gaseous ground level sampling, as in ground level sampling for particulate matter, the downwind sampler should be located off the property of the source being sampled, sampling sites should not be moved during sampling, and upwind and downwind samples are collected simultaneously. Upwind samples are not necessary in certain cases in which there is no possibility of interference from other sources. All sampler components which come in contact with the sample must be clean. Samples should be delivered to the laboratory for analysis as soon after collection as possible. Blanks of each solution of unused absorbing reagent (two to three times the reagent volume used in the sample) should be collected at the same time the sample is taken and delivered to the laboratory with each set of samples.

Certain types of monitoring instruments may be suitable for determining net ground level concentrations of specific gasses. Instrumental field sampling techniques are discussed in Chapter 7.

Field data sheets for ground level sampling are provided in Appendix D. Each sample should either have unique identification or be labeled with complete sample information including date, time period, etc. Calibration of ground level sampling equipment is discussed in Appendix C. The remainder of this chapter is devoted to descriptions of specific methods for specific pollutants. The laboratory manual discusses preparation of reagents and analysis of samples. Other absorbing solutions or alternate methods may be used with advance approval.

Determination of Sulfur Dioxide (SO_2)

Sodium Carbonate Method
Modification of West-Gaeke Method

A midget impinger sampling train with a pre-filter is used to collect samples. The absorbing solution is 20 ml of sodium carbonate solution or potassium tetrachloromercurate solution (West-Gaeke). The sodium carbonate method provides improved stability after sampling and is preferred.

The sampling train consists of a particulate matter pre-filter, midget impinger, flow meter, and pump. Sampling time is normally 30 minutes and sampling rate is 2.0 - 2.5 liters per minute (lpm). Sampling rate

must remain constant throughout the sample. A 50 ml blank of absorbing solution is collected for each set of samples taken. Other sampling rates and times may be dictated by applicable regulation.

The SO_2-tetrachloromercurate complex formed with use of the West-Gaeke solution is thermally unstable and may lose 25% of the SO_2 per day at temperatures around 40°C. Below 20°C the loss is less than 20% per day, so refrigerated storage and immediate analysis will increase the representativeness of the sample. The sodium carbonate solution is preferred for SO_2 sampling because of its improved stability. The tetrachloromercurate solution is toxic; care should be taken in its handling.

Determination of Hydrogen Sulfide (H_2S)

Molybdenum Blue Method

The sampling train consists of a particulate matter pre-filter, midget impinger, flow meter, and pump. The absorbing solution is 20 ml of alkaline cadmium sulfate. Sampling time is normally 30 minutes and sampling rate is 2.0 - 2.5 lpm. Sampling rate must remain constant throughout the sample. A 50 ml blank of absorbing solution is collected for each set of samples taken. Other sampling rates and times may be dictated by applicable regulations.

As in SO_2 sampling, the collected sample should be protected from excessive heat and sunlight. Clean impingers and sample bottles are essential for good results. If the glassware has been previously used for SO_2 sampling with West-Gaeke solution (in which case residual mercury ions may be present), it should be rinsed several times with nitric acid, followed by a DI water rinse. The cadmium sulfate solution is toxic; care should be taken in its handling.

Determination of Nitrogen Dioxide (NO_2)

Modified Christie Method

The NO_2 sampling train consists of a particulate matter pre-filter, a midget impinger, a flow meter, and a pump. The impinger contains 20 ml of sodium arsenite solution. Sample time is normally 30 minutes and sampling rate is 1.0 - 1.5 lpm. Sampling rate must remain constant throughout the sample. A 50 ml blank of absorbing solution is collected for each set of samples taken. Other sampling rates and times may be dictated by applicable regulations. The sodium arsenite solution is toxic; arsenic has been shown to be a carcinogen. Care should be taken in handling this solution.

Interferences

Nitric oxide (NO) does not appear to interfere to any significant extent. SO_2 interferes slightly to the extent that 100 g/m^3 SO_2 gives a negative response equivalent to 2-3 g/m^3 NO_2.

Determination of Ammonia (NH_3)

Phenol-Nitroprusside Method

The sampling train consists of a particulate matter pre-filter, midget impinger, flow meter, and pump. The impinger contains 20 ml of dilute sulfuric acid. Sample time is normally 30 minutes, and flow rate is 1.5 - 2.0 lpm. Flow rate must remain constant throughout the sample. A 50 ml blank of absorbing solution is collected for each set of samples taken. Other sampling rates and times may be dictated by applicable regulations.

Interferences

It has been found that urea monoalkylamines interfere positively. Formaldehyde interferes negatively when present in amounts equal to or greater than 20% of the NH_3.

Determination of Chlorine and/or Chlorides

Turbidimetric Method

The standard sampling train is used: particulate matter pre-filter, midget impingers, flow meter, and pump. The impinger contents are 20 ml of solution as described below. Sample time is normally 30 minutes and sampling flow rate is 1.5 - 2.0 lpm. Sampling flow rate must remain constant throughout sampling. A 50 ml blank of each absorbing solution is collected for each set of samples taken. Other sampling rates and times may be dictated by applicable regulations.

Gaseous Chloride (HCl)

The gaseous chloride impinger solution is DI water.

Free Chlorine (Cl_2)

Since free chlorine (Cl_2) is not trapped by DI water, two impingers in series must be used. The first impinger contains DI water to trap gaseous chlorides, and the second impinger contains alkaline arsenite solution ($NaAsO_2$) to trap free chlorine. Arsenic compounds are toxic;

care should be taken in their handling.

Interferences

Possible interferences in chlorine analysis include the formation of insoluble silver salts.such as those of iodine, bromine, and phosphate.

Determination of Fluorides

General

A treated filter method and an impinger method are two techniques which may be used for ground level fluoride sampling. The treated filter method utilizes a filter holder containing treated membrane filters stacked in series. The impinger method utilizes a pre-filter and Greenburg-Smith or perforated bulb impingers containing absorbing solution. Procedures used in the collection of vegetation samples for analysis of fluoride content are also mentioned in this section.

Treated Filter Method

The treated filter fluoride sampling train consists of a plastic filter holder containing three treated membrane filters arranged in series. Each of the filters is located in a separate stage of the filter holder and does not contact other filters. The first filter has a pore size of 0.8 micron and is treated with citric acid for collection of particulate fluorides. The second and third filters have pore sizes of 0.8 or 5.0 microns and are treated with sodium formate for collection of gaseous fluorides. Filter treating is discussed in the laboratory manual.

Filter pore size of 5.0 microns for the second and third filters should be adequate for most sampling situations; however, high fluoride concentrations may necessitate the smaller (0.8 micron) pore size for one or both of the filters. Collection efficiency may be indicated by separate analysis of the two filters. If the first sodium formate filter catch is considerably larger (approximately ten times) than that of the second sodium formate filter, then adequate collection efficiency has been obtained. If not, more efficient collection is needed; e.g., smaller pore size, slower sampling rate, larger sampling time.

The first filter (treated with citric acid) collects particulate fluorides while allowing gaseous fluorides to pass to the sodium formate filters. The citric acid prevents reaction between HF and the filter material. If separate determination of particulate fluorides and gaseous fluorides is not desired, the initial citric acid treated filter is eliminated or replaced with an additional sodium formate filter, producing a total fluoride sample.

The filter holder is followed in the sampling train by a pump and a flow meter. The sampling rate must remain constant throughout the sample. Sample volume must be at least 1000 liters. Sampling time is normally three hours; if a shorter sampling time is used, sampling time and sampling rate must be such that the total sample collected is sufficient for analysis. Low concentrations of fluorides may necessitate larger sample volumes than mentioned above to collect a sample sufficient for accurate analysis. Other sampling times and flow rates may be dictated by the applicable regulations.

Impinger Method

The impinger fluoride sampling train consists of a 0.8 micron pore size membrane pre-filter treated with citric acid (as mentioned above) followed by two Greenburg-Smith or perforated bulb impingers in series, a pump, and a flow meter. The impingers each contain 150 ml of 0.01 N sodium hydroxide (NaOH). The sampling rate must remain constant throughout the sample. The sample time is normally three hours, and sample volume must be at least 1000 liters. Other sampling times and flow rates may be dictated by the applicable regulation. Two impingers, each containing 150 ml of 0.01 N NaOH are use as blanks. Impingers should be prepared in the laboratory and sealed with rubber stoppers or other suitable means. Solutions should be resealed in the impingers after sampling to reduce the possibility of sample loss or contamination from handling and transfer.

Vegetation Sampling

Vegetation may also be collected for analysis of fluoride content. The sample should be collected by cutting plants several inches above the ground. Any obvious particles of soil should be removed from the sample. At least 20-30 grams (several large handfuls) of vegetation should be collected. Samples are placed in airtight plastic bags and identified. Field data sheets for vegetation sampling are provided in Appendix D.

CHAPTER 13

VISIBLE EMISSIONS EVALUATION

General

Visible emissions from sources such as stacks, vents, windows, stockpiles, etc. may be evaluated using the opacity concept. Accurate evaluation of opacity may be made by trained observers. This chapter describes the procedures for visible emissions evaluation and provides an overview of the Visible Emissions Evaluators Course (VEEC) through which visible emissions evaluators are trained and certified. The evaluation of visible emissions and the training and certification of observers are done in accordance with the Federal Register, 40 CFR 60, Method 9.

Procedures for Visible Emissions Evaluation

The field evaluation of visible emissions is done by repeated observation of a plume over a specified period of time. The duration of the observation must be in accordance with applicable regulations and standards which should be determined in advance. Some specific details for accurate visible emissions evaluation are as follows:

- Opacity is observed from a distance sufficient for the observer to have a clear view of the emissions with the sun oriented within a 140° sector behind the observer; i.e., within 70° either side of center.

- The observer's line of sight should be approximately perpendicular to the plume and to the longer axis of the outlet in the case of rectangular or non-circular stacks or outlets. The observation should not include more than one plume at a time; i.e., line of sight perpendicular to the axis of a set of multiple stacks or outlets.

- The background should be of sufficient contrast to the color of the emissions such that accurate readings can be obtained. High contrast backgrounds have been shown to result in the most accurate readings.

- Readings must be made in the densest portion of the plume where condensed water vapor is not present. If uncombined water is present in the plume, readings should be made immediately downstream of the dissipation of the condensed water vapor. If the condensed water vapor plume is sufficiently detached from the stack, readings should be made between the stack outlet and the formation of water droplets.

- Condensibles other than uncombined water may form downstream of the outlet and should be read in the densest portion of the plume.

- Requirements of applicable regulations should be determined in advance. A 5 minute average opacity necessitates a set of 20 consecutive readings at 15 second intervals, while a 6 minute average necessitates a set of 24 such readings. A portion of a 6 minute average may, however, be used as a 5 minute average.

- Each reading is made to the nearest 5% opacity and the average of the readings is recorded to the nearest 1% opacity.

The Visible Emissions Observation Form (Appendix D) may be used for documentation of field observations. The form has been designed to be applicable to all situations which may be encountered. The entries on the form should be self-explanatory, but a few basic rules and explanations follow:

- Entries should be made in all blanks so that the completed form is acceptable documentation of the conditions at the time of observation. If a particular item is not available or not necessary, such indication should be entered. For example, if relative humidity is a factor contributing to the size and shape of a steam plume, it should be measured and recorded. If not, measurement of relative humidity is not necessary and should be so indicated.

- The layout sketch should have a north arrow indication, wind direction and/or plume direction indication, and sun shadow indication. The sun shadow indication may be a line drawn from the observer's position in the direction that the observer's shadow falls. This indicates whether the sun is within the required 140° sector behind the observer.

- The blanks for opacity readings provide for continuous observation for up to 1 hour. Different sets of consecutive readings may be extracted to satisfy an applicable averaging time. The sets need not be consecutive but must not overlap.

Optical Transmissometers for Visible Emission Evaluation

Optical transmissometers may be suitable for opacity evaluation if proper maintenance and calibration is performed. In many cases, an in-stack transmissometer will provide a valid indication of the opacity of emissions from a source; however, situations may arise in which a transmissometer cannot be used to evaluate opacity. For example, if

water droplets are present in the stack gas, transmissometer readings may be incorrect since uncombined water is not included in the determination of opacity. The presence of condensibles or reactive emissions in a stack can also affect the validity of in-stack transmissometer readings; the stack gas may change in character downstream of the transmissometer such that the transmissometer measurement is not representative of the opacity of the emissions in the densest portion of the plume.

Lidar

Lidar (Light Detection and Ranging) is an alternate method for evaluating visible emissions. The method may be used to measure plume opacity during either day or night because the lidar contains its own pulsed light source or transmitter. Field procedures and calibration are described in the Federal Register, 40 CFR 60, Method 9, Alternate Method 1.

Visible Emissions Training and Certification

Training and certification for visible emissions evaluation is accomplished with a smoke generator capable of producing black or white smoke plumes of varying opacities. The generator is equipped with a calibrated transmissometer to indicate the opacity of the plume produced by the generator.

Training and certification is done by observing plumes produced by the smoke generator and comparing the readings to the transmissometer record. Plumes are observed using the field opacity evaluation procedures described earlier in this chapter, with minor exceptions. Plumes are read at times indicated by the smoke generator operator; setting and maintaining stable opacities from the smoke generator precludes making readings at 15-second intervals. The number of readings made during a training or certification run is specified on the plume evaluation form and may not be the same as that required for field evaluations.

The Visible Emissions Evaluators Course (VEEC) is conducted by the TACB in various locations throughout Texas. Letters of notification for the VEEC are sent to the attendees of the previous session. Course information may also be obtained from the Austin or Regional offices.

The conduct of the VEEC follows strict quality assurance guidelines and procedures. Detailed rules and procedures for the VEEC accompany letters of notification. Forms for training and certification are provided at each course site.

CHAPTER 14

CONTENTS OF SAMPLING REPORTS

GENERAL

This chapter outlines the requirements for the contents of sampling reports. Coverage includes stack sampling, ground level sampling, instrumental sampling, and continuous monitor certification. Special sampling situations may arise that do not fit these categories; however, this chapter has been broadly designed to serve as a guide to the standardization and quality assurance practices that will be checked upon review.

Reports are reviewed for acceptability for the particular intent of the report; e.g., to satisfy permit or exemption requirements, state or federal regulation requirements, etc. A report review may be cursory or detailed and is the basis upon which sampling results are accepted or rejected. The acceptability of a report is more easily determined if contents are presented in a logical, organized manner as illustrated in this chapter. Use of TACB field data and calibration forms is encouraged to expedite report evaluation and permit processing. Copies of these forms are in Appendix D of this manual. Two copies of each report shall be sent to the TACB, one copy to the Austin office and one copy to the appropriate TACB Regional office.

STACK SAMPLING

Stack test reports shall contain the following minimum information:

Table of Contents - or equivalent means of locating sections of the report

Introduction - background information pertinent to the test and testing requirements (title page may be sufficient)

- Name and location of source sampled and date(s) of sampling

- Identification of the process and name and number of the unit sampled

- List of applicable testing requirements:

  TACB Regulation numbers
  TACB Permit numbers
  TACB Permit exemption requests
  EPA NSPS/NESHAP Subparts

Court or Board Order numbers
Other

- List of pollutants sampled

Summary - a summary of test results and comparison with all applicable standards

- Summary of all measured pollutant emissions both including and excluding the impinger catch portion of the sample - the impinger portion of the sample may be excluded only in certain cases, and emission rates must be reported both including and excluding the impinger catch. Condensibles are discussed in Chapter 1.

- Comparison of all measured pollutant emissions with all applicable standards such as:

  EPA New Source Performance Standards
  EPA National Emission Standards for Hazardous Air Pollutants
  TACB Regulations
  TACB Permit Provisions and/or
    Maximum Allowable Emission Rate Table
  TACB Permit Application Representations
  TACB Exemption Requirements

- Percent isokinetic for each isokinetic sample

- Schedule of intermittent periods such as soot blowing during sampling and the normal schedule of such events

- Operating level of the process during each sample plus the normal (usual), design maximum, and maximum achievable operating levels

- Statement of operating condition of all abatement equipment during sampling

Procedure - description of equipment and procedures used during sampling and analysis

- If equipment, procedures, and analysis methods were those described in the applicable sections of the TACB Sampling Procedures Manual, the TACB laboratory manual, and/or the Federal Register, a statement to that effect should be included along with a list of specific methods and procedures used.

- If equipment, procedures, and analysis methods were not as described above, a detailed description of such methods, procedures, and equipment shall appear in this section

along with written approval for any deviations from standard procedures.

Appendices - raw data, calibrations, quality assurance

- Schematic drawing of stack (elevation and plan views) showing all dimensions, sampling port locations, inlets, outlets, and nearest upstream and downstream flow disturbances with sampling point locations shown on plan view
- Copies of all raw data taken during sampling
- Dated calibration records with dates and worksheets for all equipment used during sampling
- Laboratory analysis worksheets and results sufficient for an independent evaluation of the procedure including tare weights, blank results, etc.
- A record of the chain of custody of the samples from sampling site through final analysis
- Visible emission determination as required
- Calculations - example calculations of all applicable stack gas parameters, emission rates, and analytical results including:

  Emission rates
  Allowable emission rates (TACB, EPA, etc.)
  Excess air in stack
  Cyclonic flow
  F factor
  Soot blowing
  Stack gas parameters
    Velocity, moisture content, ACFM, SCFM, etc.
  Intermediate steps during analysis
    Titrations, aliquots, blanks, etc.

- Logs of process parameters as may be necessary to document levels of operation
- Brief resume of test personnel including source test training and experience
- Personnel information

  Name, address, and telephone number of company and name of company contact for additional information
  Name, address, and telephone number of testing organization

Names and affiliations of personnel present during testing

GROUND LEVEL SAMPLING

Ground level sampling reports shall contain the following minimum information:

Introduction - background information pertinent to the test and testing requirements (title page may be sufficient)

- Name and location of source sampled and date(s) of sampling
- Identification of the process and area sampled
- List of applicable testing requirements:

  TACB Regulation numbers
  TACB Permit numbers
  Court or Board Order numbers
  Other

- List of pollutants sampled

Summary - a summary of test results and comparison with all applicable standards such as:

TACB Regulations
TACB Permit Provisions
TACB Permit Application Representations

Sampling Conditions - description of any special conditions during sampling affecting sampling and sampling procedure such as:

- Wind variations
- Precipitation
- Terrain features
- Conditions affecting individual samplers such as nearby activity
- Other sources which may affect the sample

Procedure - description of equipment and procedures used during sampling and analysis

- If equipment, procedures, and analysis methods were those described in the applicable sections of the TACB Sampling Procedures Manual, the TACB laboratory manual, and/or the Federal Register, a statement to that effect should be

included along with a list of specific methods and procedures used.

- If equipment, procedures, and analysis methods were not exactly as described above, a detailed description of such methods, procedures, and equipment shall appear in this section along with written approval for any deviations from standard procedures.

Appendices - raw data, calibrations, quality assurance

- Copies of raw field data including:

  Name and location of source
  Dates and times of sampling
  Sampler numbers for identification
  Sample start and stop times
  Records of sampler flow rates
  Wind speed and direction
  Temperature
  Barometric pressure
  Schematic scale drawing of site showing:

    Locations of samplers
    Locations of sources
    Property lines
    Terrain features
    Wind direction

- Photographs of sampler locations are helpful to document suitability but are optional.

- Example calculations of results including any conversion calculations necessary for temperature and barometric pressure differences between sampling and calibration conditions

- Copies of sampler calibrations

- Laboratory analysis worksheets and results sufficient for an independent evaluation of the procedure including tare weights, blank results, etc.

- A record of the chain of custody of the samples from sampling site through final analysis

- Visible emissions determination as required

- Logs of process parameters as may be necessary to document levels of operation

- Personnel information

  Name, address, and telephone number of company and name of company contact for additional information
  Name, address and telephone number of testing organization
  Names and affiliation of personnel present during testing

CONTINUOUS MONITORING

THIS SECTION IS IN PREPARATION AND UPON COMPLETION WILL BE ISSUED TO ALL SPM RECIPIENTS OF RECORD. IN GENERAL, CONTINUOUS MONITORING PERFORMANCE TEST REPORTS SHOULD FOLLOW THE BASIC FORMAT OUTLINED IN THE PREVIOUS SECTIONS AND CONTAIN SUFFICIENT INFORMATION TO ALLOW AN INDEPENDENT EVALUATION OF THE TEST RESULTS.

INSTRUMENTAL FIELD SAMPLING

THIS SECTION IS IN PREPARATION AND UPON COMPLETION WILL BE ISSUED TO ALL SPM RECIPIENTS OF RECORD. IN GENERAL, INSTRUMENTAL FIELD SAMPLING REPORTS SHOULD FOLLOW THE BASIC FORMAT OUTLINED IN THE PREVIOUS SECTIONS AND CONTAIN SUFFICIENT INFORMATION TO ALLOW AN INDEPENDENT EVALUATION OF THE TEST RESULTS.

CHAPTER 15

CONTINUOUS MONITORING

THIS CHAPTER IS IN PREPARATION AND UPON COMPLETION WILL BE ISSUED TO ALL SPM RECIPIENTS OF RECORD. THE TACB DOES NOT RECOMMEND OR ENDORSE SPECIFIC BRANDS OR TYPES OF CONTINUOUS MONITORS. THE ACCEPTABILITY OF CONTINUOUS MONITORING SYSTEMS INSTALLED TO MEET TACB AND/OR EPA RULES AND REGULATIONS IS DETERMINED BY PERFORMANCE TESTING USING THE PROCEDURES SPECIFIED IN 40 CFR 60, APPENDIX B.

APPENDIX A

RESERVED

Appendix B

CALIBRATION OF STACK SAMPLING EQUIPMENT

General

This appendix describes methods for calibration of specific stack sampling equipment. Other methods may be used with advance approval if equivalent to the methods described and yield identical results. Data forms used in calibration may be found in Appendix D.

Frequency of Calibration

Due to the varied applications of calibrated stack sampling equipment, the frequency of calibration requirements are detailed in each separate section on specific calibration procedures. Normally, stack sampling equipment receives an initial detailed calibration which is subsequently checked before and after each field use. The initial detailed calibration is repeated if calibration checks are unacceptable. A posttest calibration check may also serve as the following pretest check if no possibility of change exists between field uses.

Calibration of Dry Gas Meters (DGM)

General

The gas volume measuring device used in stack sampling operations is the dry gas meter. Dry gas meters are calibrated to avoid the difficulty of adjusting the meter to read actual volume.

The primary laboratory standard for determining the calibration factor is the spirometer. Due to the need for portability, a standardized dry gas meter is used as a secondary standard but should not be subjected to sampling or field conditions. Initial calibration and calibration after any repair and/or maintenance to the dry gas meter is done with the spirometer. Otherwise, calibration is checked before and after each field use with a standardized dry gas meter. The same procedure is used for calibration of standardized dry gas meters and for calibration of console dry gas meters with the spirometer. The console DGM calibration factors obtained with the spirometer are called the console reference calibration factors.

Calibration of Dry Gas Meters with the Spirometer

The spirometer is a primary standard in which a volume of gas is displaced by a liquid. It is used for calibration of field dry gas

meters (initially and after repair and/or maintenance) and standardized dry gas meters.

Calibration is performed over the range of flow rates normally encountered in sampling. At least five flow rates (nominally 0.20, 0.40, 0.60, 0.80, and 1.0 cfm) are used. The reference calibration factors for all flow rates and the average reference calibration factor should be posted on the meter. One calibration run of five cubic feet is made at each flow rate. The calibration factor at each flow rate must be within ±2% of the average calibration factor; if not, readjustment or repair of the meter is necessary. The calibration flow rates shown above are nominal and need not be exact to perform the calibration over the range of flow rates. If the 1.0 cfm calibration flow rate is not possible with the existing equipment, calibration for that run should be done at the highest attainable flow rate.

If the dry gas meter and spirometer are not in thermal equilibrium at the same constant temperature throughout the calibration runs, corrections must be made for temperature and/or pressure differences; otherwise:

$$\text{Calibration Factor} = \frac{\text{volume displaced by spirometer}}{\text{volume displaced by dry gas meter}}$$

Procedure

1) Allow all components to come to thermal equilibrium at the same constant temperature. Operate dry gas meter for approximately 5 minutes to warm up and condition diaphragms.

2) Connect outlet of spirometer to inlet of dry gas meter with a suitable flow control valve or clamp between spirometer and dry gas meter.

3) Turn flow on and set nominal flow rate with flow control valve. Flow rates may be indicated by a mass flowmeter downstream of the dry gas meter or by other means such as timing meter readings with a stopwatch.

4) Record initial readings on appropriate data form and start run.

5) Stop flow after spirometer has displaced five cubic feet and record final readings.

6) Repeat steps 3-5 for remaining flow rates.

7) Calculate the average calibration factor. If the calibration factor for any one flow rate varies from the average calibration factor by more than ±2%, the meter must be adjusted or repaired.

8) Verify questionable data points by repeating steps 4-7 in case errors were made in raw data or procedure.

The average calibration factor must be within 1.00 ± 0.01; adjustment of the meter may be necessary to achieve these limits.

All meters used as secondary standards must be calibrated with the spirometer yearly. Dry gas meters must be calibrated with the spirometer before installation in a console, when calibration checks show unacceptable deviation from previous calibration, and after any repair, adjustment, or damage which could alter the calibration. A record must be kept of the calibration dates and factors. Calibration factors and date should be posted on the meter or console. A curve of calibration factor versus flow rate may be helpful for determination of calibration factors at intermediate flow rates.

After a meter is installed in a console, the assembly should be pressure checked at approximately 0.25 psig or 7 inches H_2O and then vacuum checked with the maximum vacuum the pump will pull. The positive pressure leak check may be performed by plugging the outlet of the console, disconnecting the negative orifice manometer line, and applying pressure through the tap until the desired pressure is indicated by the orifice manometer. The 7 inches of water positive pressure must hold steady for 10 minutes. Vacuum leak check procedures are described in Chapters 4 and 5.

Dry Gas Meter Calibration Check with Standardized Dry Gas Meter

The calibration of the console dry gas meter must be checked after each field use. This check is made with the spirometer or with a standardized dry gas meter which has been calibrated with the spirometer. Three runs of at least 5 ft^3 each are made at a flow rate within $\pm 10\%$ of the average flow rate during the field sample. Leak checks as described in the previous section should be performed at each calibration check.

Posttest calibration checks of a temperature compensating dry gas meter must be done with meter temperature within $\pm 10°F$ of the average meter temperature during sampling. Adequate means of meter temperature measurement must be provided, such as inlet and outlet temperature indicators. Other means of verification of correct operation of the temperature compensating mechanism may be used, but advance approval should be obtained.

Procedure

1) Set up equipment with outlet of standard dry gas meter connected to inlet of console through a suitable throttling valve. Make

sure all connections are leak free. Use the same pump that was used during sampling.

2) Determine the average flow rate for each set of samples on an individual source by dividing total sample volume by total sample time (include all valid samples). Calculate the average line vacuum during the field sample.

3) Determine the standardized dry gas meter calibration factor (CF_{std}) corresponding to the average flow rate from step two. A curve of calibration factor versus flow rate may be used if desired.

4) Determine a ΔH corresponding to the flow rate from step two using the equation $\Delta H = a\ (\text{flow rate})^b$ where a and b are orifice constants for the console. The average sample flow rate should be converted to laboratory conditions if field conditions are significantly different from laboratory conditions. Other acceptable means of setting flow rate may be used such as timing meter readings with a stopwatch.

5) Turn flow on and set console flow rate with console flow control valve. Set vacuum to average vacuum during sampling using the throttling valve. Operate meters for approximately 5 minutes to warm up and condition diaphragms.

6) Record initial volumes and meter inlet and outlet temperature readings at the start of the test run.

7) Shut off pump, record final volumes and temperatures, and calculate the calibration factor, CF (see form in Appendix D).

$$\text{CF Console} = \frac{(\text{std meter volume})(\text{CF std})(t\ °R,\text{console avg})}{(T\ °R,\ \text{std meter avg})(\text{console meter volume})}$$

8) Repeat steps 6-8 twice and average the three calibration factors.

9) Using the reference calibration factors for the console, determine a calibration factor for the flow rate from step 2. A curve of reference calibration factor versus flow rate may be helpful.

The calibration factor which is determined by the calibration check (step 8) is used in data reduction of the sample if it is within ±2% of the reference calibration factor of the console dry gas meter (step 9). If the calibration check is not within ±2% of the reference calibration factor, either the field meter or the standardized meter is out of calibration, and one or both may need recalibration with the spirometer and adjustment or repair as described later in this section. Calibration against the spirometer must always follow adjustment or repair of

the meter. To avoid voiding a sample, a console dry gas meter should be serviced if the calibration factor is not within ±1.5% of the reference calibration factor.

If the ±2% criterion is not met and the console dry gas meter is determined to be out of calibration, the sample set must be voided for purposes requiring accurate determinations. In any other consideration of the results, the limits on the accuracy of the sample due to the console dry gas meter must be included. If the ±2% criterion is not met and the standardized dry gas meter is suspected to be out of calibration, the sample set may be valid if the ±2% criterion is met by a calibration check with another standardized dry gas meter or the spirometer.

Calibration of Orifice Meter

The orifice meter is an essential tool for the maintenance of isokinetic sampling rates and should remain properly calibrated. Since the orifice meter parameters are not used in data reduction calculations, documentation of orifice meter calibration is not necessary. If difficulty is encountered in maintaining isokinetic sampling rates, recalibration of the orifice meter may be needed.

Separate runs of sufficient size to measure volume and flow rate accurately (approximately 1 minute) are made over the expected range of sampling flow rate. Elapsed time, initial and final dry gas meter readings, ΔH, and initial and final inlet and outlet dry gas meter temperatures are recorded for each run. The runs should cover the expected range of ΔH (0.05 to 3.0), and the number of runs should be sufficient to adequately define the curve (10 to 15). A quick one or two point calibration at the sampling site after the sampling flow rate is determined may be preferred. Each calculated dry gas meter flow rate is multiplied by the dry gas meter calibration factor to obtain actual flow rate and then can be corrected to standard conditions using the average dry gas meter temperature.

Procedure

1) Set up console to be calibrated. Run console for approximately 5 minutes to warm up and condition diaphragms. Level and zero console manometer.

2) Turn on pump and adjust flow rate to desired ΔH on manometer. Record time and dry gas meter readings, at beginning and end of run, and representative meter temperatures during run.

3) Determine flow rate at standard or meter conditions by making volume corrections for temperature, pressure, and dry gas meter calibration and then divide by run time.

4) Repeat steps 2 and 3 for all ΔH values.

5) Fit the data to a curve of the form $\Delta H = a(scfm)^b$ and calculate the a and b factors for the orifice meter. If a curve fit procedure is not available, the data may be plotted or tabulated.

Orifice meters may also be calibrated using a mass flowmeter. Mass flowmeter readout is normally volume at standard conditions so calibration data is read directly with no correction necessary. Calibration of mass flowmeters is discussed in Appendix C.

Statistical checks may be made on the accuracy of the curve fit if desired. If the isokinetic percentage obtained with the calibration data is acceptable, the accuracy is sufficient.

Calibration of Barometers

Field barometers should be calibrated to ±0.1" Hg with a laboratory-type mercury-in-glass barometer or by comparison with the station pressure at a weather service office with appropriate corrections made for differences in elevation (one-tenth inch of mercury per hundred feet elevation).

Small errors are inherent in mercury barometers due to temperature and latitude variations. If the temperature of the barometer is above 32°F (0°C), a temperature correction of approximately 0.0026 in. Hg/°F (0.12 mm Hg/°C) should be subtracted from the barometer reading. Barometers are normally accompanied by a tabulation of corrections for various temperatures. The correction for latitude is normally on the order of -0.03 in. Hg and is less than the accuracy to which the field barometer is calibrated and usually need not be considered.

Calibration of Temperature Indicators

Dial thermometers should be checked against a mercury-in-glass thermometer of known accuracy over temperature ranges encountered in sampling. Digital temperature indicators should be calibrated against known temperatures such as an ice bath, ambient air, boiling water, or other medium in which temperature is measured by a mercury thermometer of known accuracy.

Temperature indicator calibration is checked at each dry gas meter calibration check. Necessary temperature measurement accuracy is ±5°R up to 1000°R and ±15°R above 1000°R.

A prewired arrangement of necessary connections and short circuits which can be plugged into the electrical connection on the console is useful in checking temperature indicator calibration. Such an arrangement has the necessary connections to read all temperatures required during calibration on different channels of the digital temperature indicator.

These temperatures include standard dry gas meter temperatures, ambient temperatures, and a thermocouple for other temperature sources such as an ice bath.

Pitot Tube Calibration or Measurement

General

Type S pitot tubes are assigned a baseline coefficient of 0.84 if certain dimensional criteria are met. Pitot tubes may also be calibrated in a wind tunnel. This section details calibration and inspection procedures and frequency. A Pitot Tube Inspection Data Sheet is shown in Appendix D.

Frequency of Inspection or Calibration

Pitot tubes must be inspected before and after each field use. A posttest check may be used as the following pretest check if no possibility of calibration factor change exists between uses. A visual check before and after each sample is made to detect any damage to the pitot tube that may have altered the calibration factor. If a pitot tube is calibrated in a wind tunnel as standard practice instead of being assigned the baseline coefficient, it must be recalibrated at least once a year or after any damage or other change that may alter the calibration factor.

Assignment of Baseline Coefficient

If the dimensions of the pitot tube assembly satisfy certain requirements, the pitot tube is assigned a baseline coefficient of 0.84. These requirements are detailed on the Pitot Tube Inspection Data Sheet (Appendix D).

If a posttest pitot tube measurement check or postsample visual check fails to meet the requirements, the sample or test must be voided. The sample may be salvaged if the pitot tube is calibrated in a wind tunnel before being reshaped. This procedure is intended to provide a valid pitot tube calibration factor for samples taken with a pitot tube of unknown calibration factor.

Calibration in Wind Tunnel

If a pitot tube assembly is not measured and not assigned the baseline coefficient, it must be calibrated in a suitable wind tunnel or equivalent source of steady undisturbed flow. In wind tunnel calibration, differential pressure readings are made with the Type S pitot tube and compared with differential pressure readings made at the same velocity

with a standard pitot tube whose calibration factor is normally 0.99.

Procedure

1) The pitot lines between the pitot tubes and the manometers must be leak free during calibration. Pitot tube leak check procedures are discussed in Chapters 4 and 5. Pitot tubes and lines must also be free of obstructions.

2) Manometers are connected to both the standard pitot tube and the Type S pitot tube, and the pitot tubes are arranged so that each pitot tube can be returned to the same position in the wind tunnel after each manometer reading. The standard pitot tube points into the flow and the legs of the Type S pitot tube are parallel to the flow.

3) With the standard pitot tube in place, the flow is set at 0.1 inches of water on the manometer and the manometer reading is recorded.

4) With the flow unchanged, the standard pitot tube is removed and the Type S pitot tube is positioned in the same place and the manometer reading is recorded.

5) The calibration factor C_{p_i} is:

$$C_{p_i} = C_{p_{std}} \sqrt{\frac{\Delta P_{std_i}}{\Delta P_{Type\ S_i}}}$$

where $C_{p_{std}}$ is the standard pitot tube calibration factor at velocity i, and C_{p_i} is the Type S pitot tube calibration factor at velocity i, and ΔP_i is the respective manometer reading at velocity i.

6) Steps 2-5 are repeated for standard pitot tube readings of 0.2, 0.3, 0.4, 0.5, 0.6, 0.7, 0.8, 0.9, 1.0, 1.5, and 2.0 inches of water. The above manometer readings for the standard pitot tube are nominal values and need not be exact.

7) The calibration factor of the Type S pitot tube is calculated by averaging the individual calibration factors:

$$C_{p_{avg}} = \frac{\sum C_{p_i}}{n}$$

where n is the number of ΔP readings and C_{p_i} is each individual calibration factor.

Measurement of Nozzles

Nozzle areas must be determined before initial use and nozzles inspected for damage and irregularities in diameter before each use. If the nozzle is nicked, dented, or corroded it must be reshaped, sharpened, and remeasured before being used. A Nozzle Inspection and Measurement Data Sheet is shown in Appendix D.

A postsample measurement is made after each use according to the measurement procedures in Appendix D, and this area is used in data reduction. The diameter of the nozzle is measured with a micrometer to the nearest 0.001 inch on three different diameters. If any two of the three diameter measurements differ by more than 0.004 inches, the validity of the sample may be questionable and the nozzle must be reshaped and remeasured after the post sample measurement is made. The three diameters are averaged and the nozzle area is calculated as shown on the Nozzle Inspection and Measurement Data Sheet (Appendix D).

APPENDIX C

CALIBRATION OF GROUND LEVEL SAMPLING EQUIPMENT

General

The calibration of ground level sampling equipment involves up to three levels of standard meters due to the necessity for calibration mobility and traceability to primary standards. This appendix contains calibration procedures for high volume (hi-vol) samplers (particualte matter) and low volume samplers (gases) such as those used with midget impingers or treated filters.

Stack sampling dry gas meters are also suitable for use in certain ground level sampling operations. These meters and any other stack sampling equipment which may be used for ground level sampling are calibrated according to the procedures for calibration of stack sampling equipment (Appendix B).

Frequency of Calibration

Ground level sampling equipment should be calibrated before initial use and after any maintenance or repair to the sampler or the flow measuring device and should be recalibrated or checked according to A, B, or C below:

A) Recalibrate every six months

B) Recalibrate within one week before or after use

C) Check calibration within one week before or after use at one flow rate within ±10% of the flow rate during sampling. If the one-point calibration check is not within ±5% of initial calibration, proceed as in B above.

High Volume Air Sampler Calibration

Equipment

1) Orifice calibration unit (OCU)

2) Water manometer with connecting tubing

3) Calibration curve for OCU (OCU calibration is discussed later in this appendix)

4) Adapter plate: An adapter plate may be used to join the 4" dia-

meter orifice to the 8" x 10" hi-vol filter surface. In the absence of an adapter the calibration orifice can be connected directly to the hi-vol motor housing by removing the filter holder. This procedure is not possible with the manometer type hi-vol, so in this case an adapter plate is necessary.

5) Data recording sheet and blank hi-vol calibration curve form (Appendix D)

Orifice Calibration Units (OCU)

An OCU incorporates an orifice which is open to the atmosphere on the upstream side and has a single pressure tap downstream. The unit presents a variable resistance to air flow, which causes a variation in flow rate through the hi-vol. This variation in resistance is intended to simulate the resistance caused by a clean filter and the increasing resistance as the filter becomes loaded with particulate matter.

The variable resistance is produced on a manometer-type hi-vol by installing different resistance plates in the joint between the OCU and the adapter plate upstream of the hi-vol orifice. There are typically five or six of these plates having different numbers of holes simulating the resistance of various stages of filter loading. An adjustable OCU which has a continuously variable resistance may also be used. The number of readings taken (resistance plates or dial settings) must be sufficient to adequately define a calibration curve over the range of flow rates to be used. A curve can be generated by varying the input voltage to the hi-vol, but this procedure produces a different curve than is produced by the resistance method and must not be used since the resistance method more closely simulates sampling conditions. Calibration of rotameter-type hi-vols is discussed in the Federal Register, 40 CFR 50.

Types of Flow Measurement

Manometers, rotameters, and chart recorders are the devices normally used for measurement of hi-vol flow rate. With a rotameter, a tap is provided on the exhaust side of the motor. A portion of the exhaust air flows through this tap and through a rotameter, with divisions at approximately 5 cfm intervals. The meter is read to the nearest cfm, at the center of the ball, with the rotameter vertical.

Calibration Procedures - Hi-Vol

Calibration is performed by comparing the hi-vol flow rate indication (chart recorder, manometer, rotameter) to the flow rate indicated by the calibration curve for the OCU. Calibration of the OCU is discussed later in this appendix.

1) The equipment is assembled as shown in Figure C-1. A manometer- type hi-vol is shown with the OCU attached.

2) The manometers or other flow rate indicators should be zeroed or properly set. If a rotameter is used to indicate hi-vol flow rate, adjustment may be necessary so that the rotameter scale spans the range of operation of the hi-vol. Manometer readings are made by measuring the total vertical distance between the menisci in each leg of the manometer.

3) The hi-vol is turned on and allowed to warm up for at least 5 minutes using the least restrictive resistance plate or setting. Necessary rotameter adjustment is accomplished by turning the screw on top of the rotameter, after which it is locked so that the adjustment will not change. The rotameter, tubing, and hi-vol must be calibrated together and used together.

4) A data sheet such as shown in Appendix D is used to record OCU pressure drop (M_2).

5) The corresponding reading of the hi-vol field meter is recorded as M_3 for manometer, R_2 for rotameter.

6) The hi-vol is turned off and steps 4 and 5 are repeated for the other resistance plates or settings.

7) The Q_1 column on the data sheet is used to record flow rate indicated by the OCU calibration curve. The Q_1 readings must be corrected for barometric pressure and temperature differences between hi-vol calibration conditions and OCU calibration conditions and recorded as Q_2. This correction is often insignificant; however, the conditions must be documented since sampling results can be affected. Pressures referred to are true barometric pressure, not "station pressure corrected to sea level." If a suitable barometer is not available, barometric pressure can be obtained from the local weather service. This pressure must be corrected for elevation difference between the weather service office and the calibration location (0.1" Hg per 100' elevation).

Pressure and/or temperature corrections are made as follows:

$$Q_2 = Q_1 \sqrt{\frac{T_2 \times P_1}{T_1 \times P_2}}$$

where Q_2 = true flow rate (cfm)
Q_1 = flow rate from OCU calibration curve (cfm)
T_1 = absolute temperature during OCU calibration (°K or °R)*
T_2 = absolute temperature during hi-vol calibration (°K or °R)

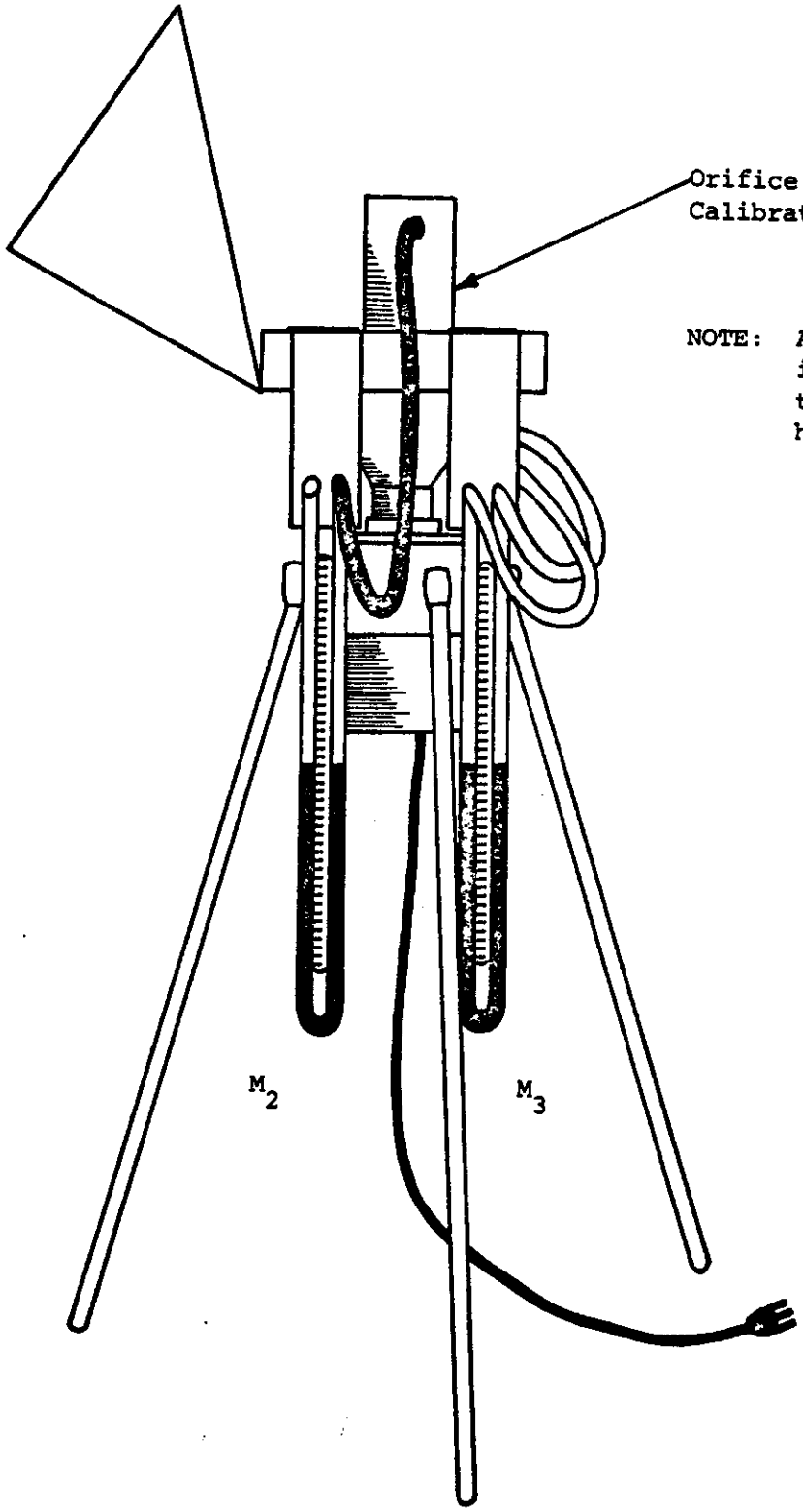

Figure C-1
Hi-Vol With Orifice Calibration Unit

P_1 = atmospheric pressure during OCU calibration (mm Hg)*
P_2 = atmospheric pressure during hi-vol calibration (mm Hg)

*Caution: If OCU calibration curve has been corrected to standard conditions, use those conditions for P_1 and T_1 (TACB Cal Lab uses 25°C and 760 mmHg). Do not mix °K or °R in the same equation.

Conversion factors: °R = °F + 460
°K = °C + 273
°C = 5/9 (°F-32)
mm Hg = inches Hg x 25.4

298

8) After pressure and temperature corrections are made to the Q_1 values and the corrected flow rate is recorded in the Q_2 column, a calibration curve of Q_2 versus R_2 or M_3 is plotted as in Appendix D. The atmospheric pressure and temperature during hi-vol calibration are recorded on the hi-vol calibration curve.

Calibration Procedures - Orifice Calibration Unit (OCU)

A Roots meter is used to calibrate the OCU used in hi-vol calibration described above. The same resistance plates are used as during hi-vol calibration. If a continuously adjustable orifice is used, sufficient readings must be taken to adequately define a calibration curve over the range of flow rates to be used.

The OCU is calibrated by attaching it (Figure C-2) to the Roots meter in such a way that all air passing through the meter will flow through the OCU. A water manometer is attached to the OCU (Figure C-2) and the pressure drop across the OCU is related to the flow rate. In order to develop a calibration curve of flow rate vs. manometer reading, it is necessary to vary the flow over a relatively wide range. This is accomplished by placing resistance plates or a variable orifice between the OCU and the meter. A curve is developed by plotting flow rate vs. pressure drop across the OCU for each of the plates or settings.

1) Assemble the calibration equipment as shown in Figure C-2, placing a resistance plate between the OCU and the Roots meter.

2) Turn the hi-vol motor on and begin timing with a stopwatch at the moment a new number appears in the trip meter; record the initial trip meter reading.

3) With the motor running, record the reading from the water manometer attached to the OCU (M_1) in inches of water and the mercury manometer attached to the Roots meter (P_m) in millimeters of mercury (see form in Appendix D). Manometer readings are made by measuring the total vertical distance between the menisci in each leg of the manometer.

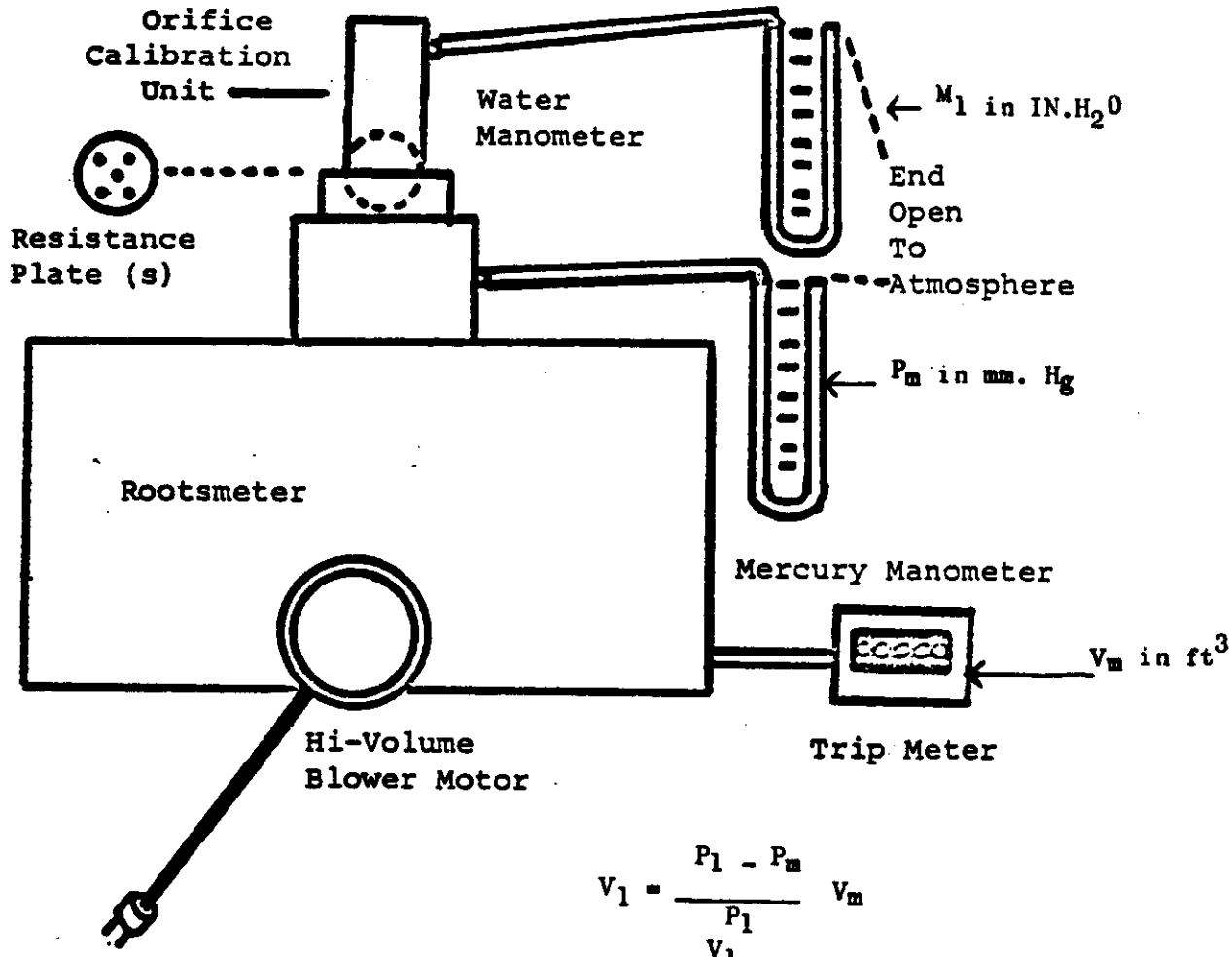

$$V_1 = \frac{P_1 - P_m}{P_1} V_m$$

$$Q_1 = \frac{V_1}{t}$$

V_1 = ACTUAL VOLUME
P_1 = ATMOSPHERIC PRESSURE
t = TIME IN MINUTES
Q_1 = ACTUAL FLOW IN ft^3/MIN.

Figure C-2
Orifice Calibration

4) After running the motor for approximately 5 minutes, turn off the stopwatch at the moment a new number appears in the trip meter; then record the elapsed time and final trip meter reading (Appendix D).

5) Repeat 1 through 4 for the other OCU resistance plates or other settings on the variable OCU.

6) Record date, temperature (°F or °C), and atmospheric pressure (P_1 in mm of mercury) at time of calibration. Record as in Appendix D.

7) Determine the indicated volume (V_m) which passed through the Roots meter for each resistance plate or setting by subtracting the initial trip meter reading (ft^3) from the final trip meter reading (ft^3). Record as in Appendix D.

8) Since the OCU is located before the inlet of the Roots meter, the pressure at the inlet of the Roots meter is below atmospheric. Therefore, a correction must be applied to the indicated volume in order to determine actual volume. Calculate actual volume:

$$V_1 = \frac{P_1 - P_m}{P_1} V_m$$

where V_1 = actual volume at atmospheric presssure (ft^3)
P_m = reading from mercury manometer (mm Hg)
V_m = volume measured by Roots meter (ft^3)
P_1 = atmospheric pressure (mm Hg)

9) Calculate the actual flow rate as follows:

$$Q_1 = \frac{V_1}{t}$$

where V_1 = actual volume at atmospheric pressure (ft^3)
t = time of run in minutes (from stopwatch)
Q_1 = actual flow rate (cfm)

10) Plot a curve using the values obtained for flow rate (Q_1) vs. pressure reading (from water manometer M_1) as shown in Appendix D. This curve is valid only for the atmospheric pressure and temperature at the time of calibration. Record atmospheric pressure and temperature at the time of calibration on the calibration form in Appendix D.

Gaseous Sampler Calibration

The frequency of gaseous sampling equipment calibration is discussed earlier in this appendix. Calibration should be performed under simulated field conditions; i.e., the instrument should be calibrated while drawing air through a normal sampling train. Portable battery powered samplers using midget impingers are normally supplied with a built-in rotameter. This field rotameter should be calibrated with a standard meter to determine true air flow. The recommended arrangement is as follows:

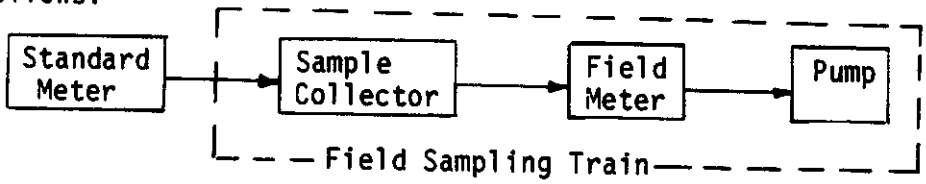

The standard meter is usually a mass flowmeter or precision rotameter. Variations in the sampling train, e.g. different impinger tips, have been shown to yield similar calibration curves. The recommended procedure is calibration of the sampler with the same type sample collector that will be used in the field.

Calibration Procedure

1) The equipment is assembled as shown in Figure C-3. The instrument to be calibrated should have a fully charged battery if so equipped. A worksheet such as shown in Appendix D is used for recording data.

2) The pump is turned on and a series of flow rates is set with the flow control knob.

3) The flow rates should cover the intended sampling range (1.5 to 3.0 lpm). Five flow rates should be sufficient to adequately define the calibration over the full range of sampling rates. The ease and speed of calibration with a mass flowmeter enables calibration to be done at all possible flow rates throughout the intended sampling range. This option results in a tabular calibration which can be used without plotting a curve.

4) Field meter and standard meter readings are recorded for each flow rate. Rotameter readings are made at the center of the ball.

5) A calibration curve or tabulation is constructed by plotting or tabulating field meter readings versus actual flow rates as in Appendix D. If necessary, a calibration curve can be supplied with the standard meter to convert standard meter readings to actual flow rates in lpm.

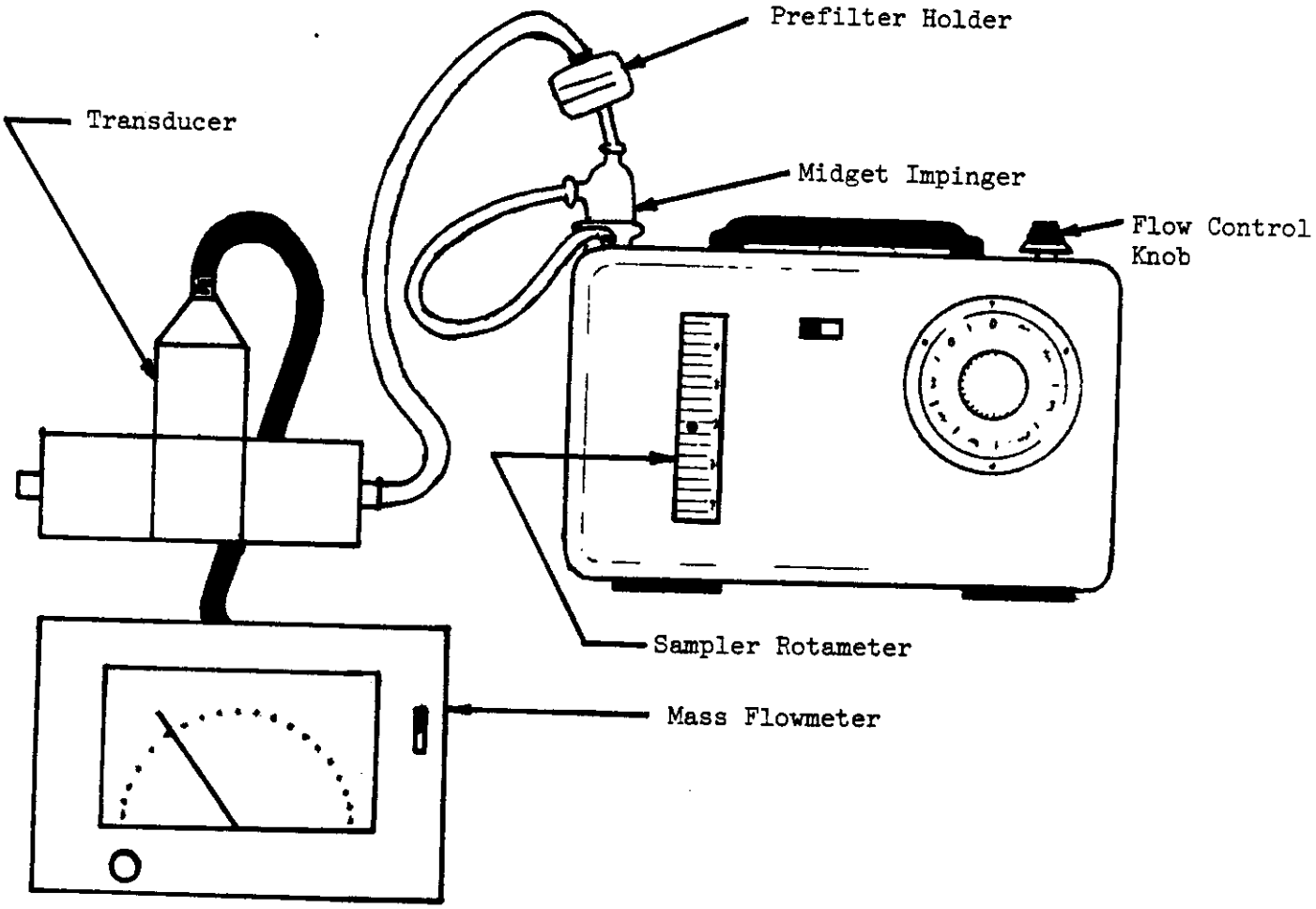

Figure C-3

Gaseous Sampler Calibration Configuration

6) Temperature and barometric pressure at the time of calibration are recorded so necessary corrections can be made at the time of sampling and data reduction.

Calibration of Mass Flowmeter with Spirometer

Mass flowmeters are designed to measure mass flow at a specific pressure and temperature condition without corrections for measurement conditions. Normally, mass flowmeters are set to indicate volume flow rate at standard conditions (standard liters per minute-slm) and will indicate slm at other conditions since mass flow rate is being measured. Mass flowmeters are calibrated by passing dry air from the spirometer through the mass flowmeter and adjusting or calibrating the mass flowmeter to indicate the spirometer flow rate corrected to standard (or other) conditions.

Circuitry in a mass flowmeter normally provides a linear readout for varying flow rates. Calibration of the mass flowmeter may be described by a straight line (slope and intercept) or the internal potentiometers may be adjusted so that the mass flowmeter indicates flow rate at a specific pressure and temperature condition (normally standard conditions). The manufacturer's instructions should be consulted in making adjustments to mass flowmeters.

Procedure

1) The inlet of the mass flowmeter is connected to the outlet of the spirometer through a valve or other means of adjusting flow rate. All connections must be leak free.

2) The flow is turned on and the desired nomimal flow rate is set by adjusting the valve between the spirometer and the mass flowmeter.

3) The spirometer is repositioned if necessary and the flow is timed with a stopwatch between spirometer increments after a steady flow rate is obtained. The duration of the run should be 5 to 10 minutes to obtain accurate time and volume readings.

4) The following parameters are recorded for each run:

   Spirometer volume displaced
   Mass flowmeter reading
   Time duration of run
   Spirometer temperature
   Barometric pressure

5) The volume displaced by the spirometer is converted to slm as follows:

$$SLM = \left(\frac{VSP}{T}\right)\left(28.32\right)\left(\frac{Pb}{760}\right)\left(\frac{528}{TSP}\right)$$

where SLM = Flow rate (standard liters per minute)
VSP = Volume displaced by spirometer (ft^3)
T = Stopwatch time to pass VSP (min)
Pb = Barometric pressure (mm Hg)
TSP = Spirometer temperature (°R)

6) The mass flowmeter reading is compared to SLM and the internal potentiometers of the mass flowmeter are adjusted if necessary. Manufacturer's instructions should be consulted. The mass flowmeter reading must be equal to the flow rate at standard conditions ±2% unless a calibration curve is constructed. Greater accuracy is often possible and should be maintained where practicable.

7) Steps 2 through 6 are repeated for other nominal flow rates. Sufficient runs at different nominal flow rates are made to adequately define the calibration over the range of use of the mass flowmeter. For instance, runs at nominal flow rates of 1, 2, 3, and 4 lpm are sufficient for a 0-5 lpm mass flowmeter used to calibrate gaseous samplers whose operation is between 1.5 and 3.0 lpm.

The maximum flow rate possible with the spirometer and mass flowmeter alone may not be sufficient to calibrate higher capacity mass flowmeters (above 5 lpm). In such cases an adjustable source of vacuum, such as a stack sampling console may be connected to the outlet of the mass flowmeter to facilitate the higher flow rates. Caution should be exercised since only a slight vacuum (which will not show up on gauge) is necessary to obtain desired flow rates.

If the mass flowmeter is set to indicate flow rate at standard conditions, a calibration curve or tabulation is not necessary. Documentation of the fact that the mass flowmeter was set or checked to read standard conditions must be recorded and also indicated on the mass flowmeter.

APPENDIX D

FORMS

DETERMINATION OF MINIMUM
NUMBER OF TRAVERSE POINTS

By using the top figure on the following page determine the number of traverse points recommended by both distance A and distance B, which have as units of distance "stack duct diameters". (This figure must be read vertically from either the top down, for distance A, or from the bottom up, for distance B) The greater number of traverse points, as determined by each of the two distances will be the number of traverse points recommended for use. Sketch a drawing of the stack below with both distances A and B and duct diameter shown. Show both elevation and plan view.

How Distances
Are Determined _____

Distance A (in feet) _____ (in duct diameters) _____
Recommended Number of Traverse Points as determined by Distance A _____

Distance B (in feet) _____ (in duct diameters) _____
Recommended Number of Traverse Points as determined by Distance B _____

Stack Diameter Port (in feet) _____

Date _____

Signature _____

New, 1972 Draper

TRAVERSE POINTS LAYOUT FOR CIRCULAR STACKS

Minimum number of traverse points per sample obtained from "Distances to Disturbances", Upstream and Downstream.

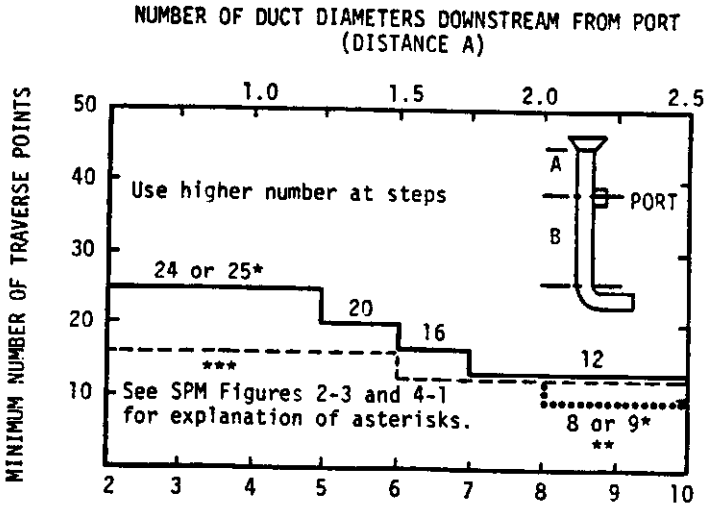

For non-circular stacks the hydraulic diameter D_H is used where:

$$D_H = \frac{4(\text{Area duct at port})}{(\text{Perimeter duct at port})}$$

Traverse Point Number	LENGTH FACTORS (Fraction of stk. diam. from inside wall to traverse pt.) NUMBER OF TRAVERSE POINTS ON A DIAMETER											
	2	4	6	8	10	12	14	16	18	20	22	24
1	.146	.067	.044	.033	.025	.021	.018	.016	.014	.013	.011	.011
2	.854	.250	.147	.105	.082	.067	.057	.049	.044	.039	.035	.032
3		.750	.295	.194	.146	.118	.099	.085	.075	.067	.060	.055
4		.933	.705	.323	.226	.177	.146	.125	.109	.097	.087	.079
5			.853	.677	.342	.250	.201	.169	.146	.129	.116	.105
6			.956	.806	.658	.355	.269	.220	.188	.165	.146	.132
7				.895	.774	.645	.366	.283	.236	.204	.180	.161
8				.967	.854	.750	.634	.375	.296	.250	.218	.194
9					.918	.823	.731	.625	.382	.306	.261	.230
10					.975	.882	.799	.717	.618	.388	.315	.272
11						.933	.854	.780	.704	.612	.393	.323
12						.979	.901	.831	.764	.694	.607	.398
13							.943	.875	.812	.750	.685	.602
14							.982	.915	.854	.796	.739	.677
15								.951	.891	.835	.782	.728
16								.984	.925	.871	.820	.770
17									.956	.903	.854	.806
18									.986	.933	.884	.839
19										.961	.913	.868
20										.987	.940	.895
21											.965	.921
22											.989	.945
23												.968
24												.989

TRAVERSE POINTS LAYOUT FOR CIRCULAR STACKS - cont'd

Stack I.D. at Port _____ feet Port Extension _____ feet

Traverse Point Number	Column A Length Factor from Previous Page, K_L	Column B K_L x (stack ID)
1		
2		
3		
4		
5		
6		
7		
8		
9		
10		
11		
12		
13		
14		
15		
16		
17		
18		
19		
20		
21		
22		
23		
24		

The port extension distance is the distance from the nozzle to the reference point.

Column B contains the distances from the reference point to the sample points.

For non-circular stacks the traverse point layout must be recorded and identified on this form.

Measure from the nozzle, a distance equal to the port extension and mark this point as a reference point from which all subsequent distances (from Column B) are measured.

Date _____

Signature _____

RECORD OF PRELIMINARY INFORMATION

This page is to be used in place of the three pages showing preliminary moisture determination, preliminary orsat analysis results, preliminary molecular weight calculation and preliminary velocity determination when this information is obtained from a previous sample or other source.

PREVIOUS SAMPLE INFORMATION

Date of Previous Sample: _____

Name of Sampling Group: _____

Preliminary Moisture Fraction: _____

Preliminary Velocity: _____

Preliminary Stack Pressure: _____

Preliminary Stack Temperature: _____

Notes and explanations if a source of information other than a previous sample was used: _____

_____

_____

_____

PRELIMINARY MOISTURE DETERMINATION

If preliminary moisture is not determined by the following procedure please state how preliminary moisture was determined:

_____

_____

CONDENSER METHOD

Initial Meter Temp. Inlet _____ Outlet _____

Final Meter Temp. Inlet _____ Outlet _____

Average Tmp. _____ °F TM = Average temp. + 460 = _____ °R

FIRST IMPINGER
Final Wt. _____
Initial Wt. _____

SILICA GEL IMPINGER
Final Wt. _____
Initial Wt. _____

Total Gain, MWC _____ grams H_2O

(Add the gains from both impingers to obtain total gain)

Pressure at Meter, PM, _____ inches Hg. (For purposes of this test, PM is equal to atmospheric pressure since ΔH is very small.)

Dry Gas Meter Reading, Final _____
Initial _____
Net Volume _____ ft^3

Corrected Volume (V)
Dry Gas Meter Calibration Factor, DGMCF _____

V = (Net Vol) (DGMCF) = ( ) ( ) = _____ ft^3

$$\text{Moisture Fraction} = \frac{(\text{MWC})\ (1.335)\ \frac{\text{liters}}{\text{gm } H_2O}}{\left[(\text{MWC})\ (1.335)\ \frac{\text{liters}}{\text{gm } H_2O}\right] + \left[\frac{(V)\ (PM)}{(TM)}\ (499.4)\ \frac{\text{liters } °R}{ft^3 \text{ in. Hg}}\right]}$$

$$\text{Moisture Fraction} = \frac{(\quad)\ (1.335)}{\left[(\quad)\ (1.335)\right] + \left[\frac{(\quad)(\quad)}{\quad}\ (499.4)\right]}$$

= _____

Dry Gas Fraction = 1 - (moisture fraction) = 1 - ( ) = _____

When the moisture determination experiment is repeated, use copies of this page for collecting data and recording results. If this is done, calculate the averages:

Average Moisture Fraction _____

Average Dry Gas Fraction _____

Date _____

Signature _____

PRELIMINARY
ORSAT ANALYSIS RESULTS

Date _____

Time _____

Signature _____

Gas Fractional Part

CO_2 _____

O_2 _____

CO _____

N_2 _____

Orsat fractional parts must sum to 1.00.

At least one preliminary Orsat analysis must be taken unless reliable preliminary information is available from other sources. If a preliminary Orsat is not taken, state how this preliminary information was obtained: _____

_____.

PRELIMINARY
MOLECULAR WEIGHT CALCULATIONS

This calculation of molecular weight is not required for gaseous sampling.

	Molecular Weights	Moisture Fraction (Dry)	Partial Mol. Wt.
H_2O	(18)	[_____ =	_____

	Molecular Weights	Orsat Fraction	Gas Fraction	
CO_2	(44)	(_____)	[_____ =	_____
O_2	(32)	(_____)		_____
CO	(28)	(_____)		_____
N_2	(28)	(_____)		_____

Molecular Weight of Stack Gas . . . . . _____
(Sum of partial molecular weights)

Date _____

Signature _____

PRELIMINARY VELOCITY DETERMINATION

If preliminary velocity is not determined by the following procedure please state how preliminary velocity was determined. ↘

_____

Traverse Pt.	Δp (inches H_2O) I	II	III
Date			
Time			
1			
2			
3			
4			
5			
6			
7			
8			
9			
10			
11			
12			
13			
14			
15			
16			
17			
18			
19			
20			
21			
22			
23			
24			

For Preliminary Velocity Calculation, Isokinetic Sampling:

1. Use calculator to sum the square roots of all Δp's and divide this by N, the number of Δp's.

   Aver. $\sqrt{\Delta p}$ = $\dfrac{\Sigma\sqrt{\Delta p}}{N}$

   Aver. $\sqrt{\Delta p}$ = $\dfrac{(\quad)}{(\quad)}$ = _____

   (units are inches H_2O to the one half power)

2. Obtain the pitot tube calibration factor for the probe used. Probe No. _____ Pitot Tube Calibration Factor _____ (Shown in the equation below as PTCF)

3. Calculate Absolute Stack Pressure:
   Measured Stk. Press. (gauge) _____ "H_2O
   (Measured stack press. may be (+) or (-))
   Preliminary Atmo. Press. _____"Hg
   Stack pressure in inches of water (gage), times 0.07355, plus the barometric pressure in inches mercury equal to the absolute stack pressure in inches of mercury:

   ( ) in.H_2O (.07355) + ( )in. Hg
   = Stack Press. _____in. Hg

4. Calculate average preliminary velocity, V, in feet per second as shown below.

$$V = (85.48)\ (PTCF)\ \sqrt{\frac{(\text{Stack Temp. }^\circ R)}{[\text{Mole. Wt.}]\ [\text{Stk. Press. inches Hg}]}}\ (\text{Average}\sqrt{\Delta p})$$

$$V = (85.48)\ (\quad)\ \sqrt{\frac{(\quad)}{(\quad)(\quad)}}\ (\quad) = \_\_\_\_\_\ \text{ft/sec}$$

Date _____

Time _____

Signature _____

NOZZLE AND K DETERMINATION

This page is not necessary if nomograph is used.

Step 1. Calculate the following nozzle determination constant:

$$C = \left[\begin{matrix}\text{Preliminary}\\ \text{Velocity}\\ \text{ft/sec}\end{matrix}\right] \times \left[\frac{60 \text{ sec}}{\text{min}}\right] \times \left[\frac{\text{Dry Gas}}{\text{Fraction}}\right] \times \left[\frac{\text{Stk. Press. "Hg}}{29.92 \text{ "Hg}}\right] \times \left[\frac{528 \ ^\circ\text{R}}{\text{Stk.Temp.}^\circ\text{R}}\right]$$

$$C = \left[\quad\right] \times 60 \times \left[\quad\right] \times \left[\frac{\quad}{29.92}\right] \times \left[\frac{528}{\quad}\right]$$

$$= \underline{\qquad\qquad} \text{ ft/min}$$

Step 2. Calculate the desired Nozzle Area from the desired flow rate: (See sampling manual for guidelines on desired flow rate.)

$$\text{Desired Nozzle Area} = \frac{\text{Desired flow rate at STP, ft}^3\text{/min}}{\text{C, from above, ft/min}} = \left[\qquad\qquad\right] = \underline{\qquad\qquad} \text{ ft}^2$$

Step 3. Choose appropriate nozzle from those available.

Noz. No. selected _____, Area of nozzle selected _____ ft^2

This nozzle may be changed for subsequent samples. Always indicate the area used on each field data sheet. Each sample point is sampled for an equal amount of time. Total sample time is the product of the number of points and the time per point.

Step 4. Calculate the flow rate at standard conditions for this nozzle.

$$\text{Flow Rate for Nozzle Selected} = \left[\text{Area of Nozzle Selected}\right] \times \left[\text{Constant C, above}\right] = \left[\quad\right] \times \left[\quad\right] = \underline{\qquad} \text{ SCFM}$$

Check the total sample volume. Max. & min. sample volume is discussed in the Sampling Manual.

$$\text{Total Vol.} = (\text{SCFM}) \times \left[\begin{matrix}\text{Total}\\ \text{time}\\ \text{min.}\end{matrix}\right] = \left[\quad\right] \times \left[\quad\right] = \underline{\qquad} \text{ ft}^3 \text{ at STP Dry}$$

Step 5. Calculate ΔH: $\Delta H = a\,(\text{SCFM})^b = (\quad)\,(\quad)^{\left[\quad\right]} = \underline{\qquad}$ "H_2O

The orifice curve constants, a and b, are posted on the front of each console.

Step 6. Calculate ΔP: $\Delta P = (\text{Aver.}\sqrt{\Delta p})^2 = (\quad)^2 = \underline{\qquad}$ "H_2O

Average $\sqrt{\Delta p}$ is from the preliminary velocity calculations.

Step 7. Calculate K: $K = \left[\frac{\Delta H}{\Delta P}\right] = \left[\text{———}\right] = \underline{\qquad}$.

K will be used to determine ΔH, $\Delta H = \Delta P \times K \times \left[\frac{Tm_o \ ^\circ R}{528}\right]$

Tm_o is the outlet temperature of the dry gas meter. K may be changed for subsequent samples. Indicate the K factor used on each data sheet.

Date _____

Signature _____

STACK SAMPLING FIELD DATA

PLANT NAME ____________________ STACK NAME ____________________

DATE __________ OPERATOR ____________ SAMPLE NUMBER ________ STACK HEIGHT ________

STACK DIAM. (exit) ______ STACK DIAM. (port) ______ STACK PRESS. (In. H_2O) ______ BARO. PRESS. (In. H_2O) ______

PROBE NUMBER __________ PTCF __________ DGMCF __________ PUMP NUMBER __________

NOZZLE NUMBER ______ NOZZLE AREA __________ FILTER NUMBER ______ OUT WEIGHT GRAMS ______

METER NUMBER ________ K FACTOR ________ ORIFICE CONSTANTS a ________ b ________

Point	Clock Time	Dry Gas Meter Reading	ΔP Inches H_2O	ΔH Inches H_2O		DRY GAS METER TEMPERATURE		L. VAC. Inches Hg Gauge	Box Temperature °F	Stack Temperature °F
						Inlet	Outlet			
	Sample Time	Net Volume								

IMPINGER CATCH

Sample Number _____ Stock Name _____ Company Name _____

Impinger Number	Solution Used	Amount of Solution (milliliters)	Impinger Tip Configuration	Weight (grams)
1				Final Initial Weight gain
2				Final Initial Weight gain
3				Final Initial Weight gain
4				Final Initial Weight gain
5				Final Initial Weight gain
6				Final Initial Weight gain
Flask				Final Initial Weight Gain

TOTAL WEIGHT GAIN OF IMPINGERS (grams) _____

Date _____

Signature _____

Independent Verification of Calculations Shown Above

Explanation: Someone other than the person who performed the original work and associated calculations must verify that these calculations have been performed correctly.

Signature _____

Date _____

ORSAT ANALYSIS RESULTS

Gas Fractional Part

CO_2 _____

O_2 _____

CO _____

N_2 _____

Date _____

Time _____

Signature _____

Sample No._____ Stack Name_____ Company Name_____

FIELD CHECK OF MOLECULAR WEIGHT

(To be used when substantial changes have occurred in the moisture fraction)

	Molecular Weights	Orsat Fraction	Moisture Fraction / Dry Gas Fraction		Partial Mol. Wt.
H_2O	(18)	. . . . .	[_____]	=	_____
CO_2	(44)	(_____)	[_____ (see above)]	=	_____
O_2	(32)	(_____)		=	_____
CO	(28)	(_____)		=	_____
N_2	(28)	(_____)		=	_____

Molecular Weight of Stack Gas . . . . . _____
(Sum of partial molecular weights)

FIELD CHECK ON MOISTURE FRACTION

Corrected sample Vol. (DGV)

(net vol) x (DGMCF) = _____ ft^3

Avg. meter temp., TM = Avg. meter temp. °F + 460 = _____ °R

Total imp. wt. gain, MWC _____ grams H_2O

Pressure at meter, PM _____ inches Hg

$$\text{Moisture Fraction} = \frac{(MWC)\ (1.335)\ \frac{\text{liters}}{\text{gm } H_2O}}{\left[(MWC)\ (1.335)\ \frac{\text{liters}}{\text{gm } H_2O}\right] + \left[\frac{(DGV)\ (PM)}{(TM)}\ (499.4)\ \frac{\text{liters °R}}{ft^3\ \text{in.Hg}}\right]}$$

$$\text{Moisture Fraction} = \frac{(\quad)\ (1.335)}{\left[(\quad)(1.335)\right] + \left[\frac{(\quad)\ (\quad)}{(\quad)}\ (499.4)\right]} = \_\_\_\_$$

Dry Gas Fraction = 1 - (moisture fraction) = 1 - ( ) = _____

Date _____

Signature _____

Sample No._____ Stack Name_____ Company Name_____

FIELD CHECK OF PERCENT ISOKINETIC

The following field check should be performed after the first sample and may be performed after subsequent samples if changes were made. None of the results from this page are used as input into the final data reduction.

1. Calculate nozzle volume at stack conditions (NVSC) given the following items obtained during the sample:

   a. Corrected dry gas volume, DGV _____ ft^3
   b. Aver. Stack Temp., TS _____ °R
   c. Aver. Meter Temp., TM _____ °R
   d. Dry Gas Fraction, BDG _____

$$NVSC = \frac{(DGV)\ \frac{(TS)}{(TM)}}{(BDG)} = \frac{(\quad)\ \frac{(\quad)}{(\quad)}}{(\quad)} = \underline{\quad} \ ft^3$$

2. Calculate the average corrected stack velocity (V). First, sum the square roots of the Δp's obtained during the sample and divide by N, the number of Δp's, to obtain the average square root of Δp:

$$\text{Aver. } \sqrt{\Delta p} = \frac{\Sigma\sqrt{\Delta p}}{N} = \frac{(\quad)}{(\quad)} = \underline{\quad} \ in.^{1/2}$$

$$V = (85.48)\ (PTCF)\ \sqrt{\frac{TS}{\text{Mole Wt.} \times \text{Stack Press}}}\ \text{Aver. } \sqrt{\Delta p}$$

$$V = (85.48)\ (\quad)\ \sqrt{\frac{(\quad)}{(\quad)(\quad)}}\ (\quad) = \underline{\quad} \ ft/sec$$

Preliminary molecular weight may be used unless significant changes occurred in moisture fraction. Preliminary stack pressure may be used.

3. Calculate percent isokinetic given:

   a. Nozzle volume, NVSC _____ ft^3
   b. Nozzle area, AN _____ ft^2
   c. Sample time, TIM _____ seconds
   d. Aver. Corrected Velocity, V _____ ft/sec

$$\%\ Iso. = \frac{(NVSC)\,(100\%)}{(AN)\,(TIM)\,(V)} = \frac{(\quad)\ (100\%)}{(\quad)(\quad)(\quad)} = \underline{\quad}\%$$

Date _____

Signature _____

TEXAS AIR CONTROL BOARD
6330 HWY. 290 EAST
Austin, Texas 78723

PLANT OPERATIONAL STATUS FORM

Applicable TACB Permit Number _____

Date _____ Account Number _____

Plant Name _____ Location _____

Stack Name _____

Proportional or Isokinetic Sampling _____

Sample Number	Duration of Sample (Show Start time and Stop time)	Date of Sample
1.	From _____ To _____	_____
2.	From _____ To _____	_____
3.	From _____ To _____	_____
4.	From _____ To _____	_____

Special Conditions _____

_____

Signature _____

Title _____

The above portion is to be completed by the Air Control Board representative.
The following portion is to be completed by the plant representative.

Plant Status During Sampling Periods Shown Above

Type of Process _____

Abatement Controls _____

Stack Height _____ ft Stack Exit Diameter _____ ft

Production Rate Units _____ Emission Point Number _____

Sample Number	Actual Production Rate
1.	_____
2.	_____
3.	_____
4.	_____

Design Production Rate _____

Normal Production Rate _____

Maximum Achievable Prod. Rate _____

Additional Information _____

_____

I certify that the above statements are true to the best of my knowledge and belief:

Signature _____

Title _____

RECORD OF DELTA P'S
WHEN PROPORTIONAL SAMPLING
IS PERFORMED

The Δp's listed here are used as input for final data reduction.

Trav. Pt. No.	Δp (inches H_2O) Sample One Date: _____ Time: _____ Signature: _____	Sample Two Date: _____ Time: _____ Signature: _____	Sample Three Date: _____ Time: _____ Signature: _____	Sample Four Date: _____ Time: _____ Signature: _____
1				
2				
3				
4				
5				
6				
7				
8				
9				
10				
11				
12				
13				
14				
15				
16				
17				
18				
19				
20				
21				
22				
23				
24				

One set of Δp's should be obtained before or after each sample.

STACK SAMPLING ANALYSIS REQUEST
(please print)

COMPANY _____ LOCATION _____

STACK _____ DATE SAMPLED _____

TEAM LEADER OR SAMPLE CUSTODIAN _____

DATE/TIME FIRST SAMPLE RECOVERED _____ / _____ ACL No. _____
(lab use only)

SAMPLE NUMBER						BLANKS
FILTER NUMBER						
ANALYZE FOR						
FILTER						
IMP 1						
IMP 2						
IMP 3						
IMP 4						
PROBE WASH						

TOTAL NUMBER OF: SAMPLE BOTTLES _____ BLANKS _____
FILTERS _____ BLANKS _____

COMMENTS, REMARKS, INSTRUCTIONS, ETC. _____

SAMPLE CUSTODY RECORD

DELIVERED TO/RECEIVED BY			
SIGNATURE			
DATE/TIME			
SAMPLE INTEGRITY/APPEARANCE (if other, see comments)	OK _____ OTHER	OK _____ OTHER	OK _____ OTHER

FIELD DATA SHEET FOR
SRU TAIL GAS SAMPLE

PLANT NAME _____ STACK NAME _____

SAMPLING FOR _____ DATE _____

OPERATOR _____ TIME _____

SAMPLE NUMBER _____ METER NUMBER _____ DGMCF _____

BAROMETRIC PRESSURE (In.) Hg _____ AMBIENT TEMPERATURE _____ H_2S/SO_2 _____

DRY GAS METER READINGS, ft^3

FINAL _____

INITIAL _____

NET VOLUME _____

DRY GAS METER TEMPERATURE, °F

Inlet	Outlet

Aver. Meter Temperature _____

IMPINGER WEIGHT GAIN, GRAMS

			Solution Used
1	Final	_____	
	Initial	_____	_____
	Increase	_____	
2	Final	_____	
	Initial	_____	_____
	Increase	_____	
3	Final	_____	
	Initial	_____	_____
	Increase	_____	
4	Final	_____	
	Initial	_____	_____
	Increase	_____	
5	Final	_____	
	Initial	_____	_____
	Increase	_____	
6	Final	_____	
	Initial	_____	_____
	Increase	_____	

Total Impinger Gain _____

ORSAT DATA

	Fractional Part
CO_2	
O_2	
CO	
N_2	

Independent Verification of Calculations Shown Above

Explanation: Someone other than the person who performed the original work and associated calculations must verify that these calculations have been performed correctly.

_____

Signature

_____

Date

_____

Signature

Revised Feb. '83

DATA REQUIRED FOR EXCESS AIR CALCULATIONS OF SRU's

Company Name _____

Date	_____	_____	_____
Time	_____	_____	_____
Run #	_____	_____	_____
Fuel Gas Flow Rate SCFM	_____	_____	_____

Fuel Gas Analysis (mole %)

Nitrogen	_____	_____	_____
Oxygen	_____	_____	_____
Carbon dioxide	_____	_____	_____
Carbon monoxide	_____	_____	_____
Methane	_____	_____	_____
Ethane	_____	_____	_____
Propane	_____	_____	_____
Butane	_____	_____	_____
Pentane	_____	_____	_____
Water	_____	_____	_____
Hydrogen	_____	_____	_____
Sulfur dioxide	_____	_____	_____
Hydrogen sulfide	_____	_____	_____
Carbon disulfide	_____	_____	_____
_____	_____	_____	_____
_____	_____	_____	_____
_____	_____	_____	_____

Fuel Gas Analysis must be done on a wet basis and must include all of the above components plus any other combustibles that may be present.

_____
Plant Representative Signature

_____
Title

New 1976 Draper

Cyclonic Flow
Computer Input Δp Values
For Vertical Velocity Component

Point Number	Flow Angle α	Sample One		Sample Two		Sample Three		Sample Four	
		Field Δp	"Δp" Value Vertical $(\cos \alpha)^2$ (Δp)	Field Δp	"Δp" Value Vertical $(\cos \alpha)^2$ (Δp)	Field Δp	"Δp" Value Vertical $(\cos \alpha)^2$ (Δp)	Field Δp	"Δp" Value Vertical $(\cos \alpha)^2$ (Δp)

CYCLONIC FLOW

RECORD OF ANGLES AND SAMPLE TIMES

Sample Time per point if not Cyclonic ________________minutes (Base Time)

Sample Point Number	Preliminary Δp	α (Alpha)	Cosine of Angle, α	Time at each point, minutes	Time at each point minutes, seconds

QUALITY ASSURANCE

CHECK LIST

COMPANY NAME _____

DATE SAMPLED _____

	QA ITEM	TEAM LEADER SIGNATURE	CHECKED BY BY
1)	Raw data is complete and readable.		
2)	Report was checked for internal consistency; i.e., no conflicting input data, results, sample dates, or times		
3)	All data and signature blanks completed (except on continuation pages)		
4)	Computer input agrees with raw data		
5)	Proper TACB Rules were selected		
6)	TACB permit allowable emission rate has been calculated if applicable		
7)	NSPS allowable emission rate and reduced PMR have been calculated if applicable		
8)	If hand calculations were used for data reduction, the procedure and calculations have been verified to be correct		
9)	Apparatus such as nozzles, pitot tubes, thermocouples, barometers, and dry gas meters used in obtaining these field data and physical samples were in calibration (where applicable) and in good working order at the time these samples were taken		
10)	For non-particulate sampling, review of the raw data does not indicate any impinger back-ups in the samples used for the conclusion of this report		
11)	For isokinetic sampling, all samples used for the conclusion of this report were within 90% to 110% isokinetic		

CHECK LIST FOR STACK SAMPLING

Place initials in appropriate blank after completing checks listed at right. Complete all checks on list for each sample. See the Sampling Procedures Manual for details.

SAMPLE 1	SAMPLE 2	SAMPLE 3	SAMPLE 4	PRESAMPLING CHECKS
____	____	____	____	1) Turn on console and check for normal operation. Allow the dry gas meter to reach normal operating temperature by running the meter as necessary.
____	____	____	____	2) Level and zero manometers.
____	____	____	____	3) Leak check pitot lines. Pressurize each pitot line to about 5 inches of water and plug--manometer must hold steady or leak must be repaired--repeat with 5 inches vacuum per Sampling Procedures Manual (SPM).
____	____	____	____	4) Measure stack pressure at null position and record angle from axial centerline of duct.
____°	____°	____°	____°	
____	____	____	____	5) Leak check sampling train, including nozzle, prior to start of sample as per the SPM. Be sure to record the initial dry gas meter volume.
____	____	____	____	6) Clock time must be actual time at all times.
____	____	____	____	7) Leak check orsat prior to use.
				POSTSAMPLING CHECKS
____	____	____	____	1) Purge sampling train with ambient air if required, i.e., isopropanol impinger.
____	____	____	____	2) Leak test sample train from nozzle tip to at least highest vacuum encountered during sampling. Make note of any leak greater than 0.02 ft^3/min.
____	____	____	____	3) Mark sheet on orsat box when used.
____	____	____	____	4) Perform postsample leak-check of pitot lines, follow procedures in item three above. Make note of any postsample pitot line leakage.

Calibration of Dry Gas Meter by Spirometer

Meter No. _____ Date of this Calib. _____ Expires _____

Calib. performed by _____ Last Calib. Date _____

Reason for Calib. _____

Spirometer Volume for all calibrations is 5.000 ft^3.

Warm up the dry gas meter as necessary by operating it before calib. is performed.

Nominal CFM	Dry Gas Meter Volume, ft3			Elapsed Time		Actual CFM	**Calib. Factor
	Final	Initial	Net	Min. & Sec	Dec. Min		
0.2							
0.4							
0.6							
0.8							
1.0							
*							
*							
*							
*							
*							

*Repeated Runs. Obtain at least 5 valid Calib. Factors. Lineout runs that are not valid. Use only valid runs for calculation of the average calibration factor.

Was spirometer and DGM at thermal equilibrium? (If not at thermal equilibrium, temp. corrections must be made)

Answer [ ]

Actual Flow Rate = $\frac{5.000\ ft^3}{\text{time, dec. min}}$ Calibration Factor = $\frac{5.000\ ft^3}{\text{Net DGV } ft^3}$

Average Calib. Factor = $\frac{\text{Sum of 5 factors}}{5}$ = Av. Calib. Factor [ ]

**These factors are referred to as "DGMCF". The factors shown above, with the associated flow rates, are the "reference factors" for dry gas meters installed in consoles. This same form is used to establish the calibration factors for the standard dry gas meters. These factors and associated flow rates are posted on the console or on the dry gas meter.

Console Check And
Console Dry Gas Meter Calibration Check

Console No. _____ Date _____ Person performing this check _____

Last Field Use: Company _____ Sample Dates _____

Average flow rate at which this meter was used during samples: _____ cfm

Warm up the dry gas meters by operating them as necessary before beginning the calibration. Initial meter temperature should be read during initial portion of the calibration.

Calibration Number One

	Volume in ft^3		Temperature °F			
			Std. DGM		Console DGM	
	Std. DGV	Console DGV	T_{in}	T_{out}	t_{in}	t_{out}
Final -						
Initial						
Net ft^3			T Aver. + 460 °R _____		t Aver. + 460 °R _____	

Min. Vol. is 5 ft^3

Calib. Factor _____

Elapsed Time: Min. & Sec. _____ Dec. Min. _____

Calibration Number Two

	Volume in ft^3		Temperature °F			
			Std. DGM		Console DGM	
	Std. DGV	Console DGV	T_{in}	T_{out}	t_{in}	t_{out}
Final -						
Initial						
Net ft^3			T Aver. + 460 °R _____		t Aver. + 460 °R _____	

Min. Vol. is 5 ft^3

Calib. Factor _____

Elapsed Time: Min. & Sec. _____ Dec. Min. _____

Calibration Number Three

	Volume in ft^3		Temperature °F			
			Std. DGM		Console DGM	
	Std. DGV	Console DGV	T_{in}	T_{out}	t_{in}	t_{out}
Final -						
Initial						
Net ft^3			T Aver. + 460 °R _____		t Aver. + 460 °R _____	

Min. Vol. is 5 ft^3

Calib. Factor _____

Elapsed Time: Min. & Sec. _____ Dec. Min. _____

Information on Standard Dry Gas Meter Used for This Check

Std. DGM No. _____ Expiration Date _____

Std. DGMCF	Flow Rate CFM

Record CFM's and DGMCF's for the two points that bracket the average flow rate shown above. Interpolate to find the Standard Calibration Factor at the average flow rate.

Standard Calib. Factor, CF_{std} = _____

LEAK CHECK AND TEMPERATURE CALIBRATION

Leak check procedures and calibration of the temperature measurement system is described in Appendix B of the Sampling Procedures Manual. I certify that I have verified that this console is free from leakage and that the temperature measurement system is in calibration.

_____
Signature

_____
Date

Calibration Factor is calculated by the equation shown below:

$$\frac{(\text{Std. Vol.}) \times (\text{CF std.}) \times (\text{tavg.})}{(\text{Tavg.}) \times (\text{Console DGMV})} = \text{Calibration Factor}$$

Average Calibration Factor: _____

To be used on all three samples if within ± 2% of the reference calibration factor.

CONSOLE CHECK AND
CONSOLE DRY GAS METER CALIBRATION CHECK (continued)

Flow rate versus Calibration Factor from Spirometer Calibration of Console Dry Gas meter.

Record CFM's and Console DGMCF's that bracket the average flow rate at which this meter was used during the sample.

Interpolate to find the calibration factor corresponding to the average flow rate during the samples. This factor is the reference calibration factor.

Flow Rate CFM	Console DGMCF
_____	_____
_____	_____

Reference Calibration Factor: _____

Calculate the ratio between the average calibration factor from the previous page and the reference calibration factor:

$$\frac{\text{Aver. Calib. Factor}}{\text{Reference Calib. Factor}} = \frac{\qquad}{\qquad} = \frac{\qquad}{\qquad}$$

This ratio must lie between 0.98 and 1.02, if it does, the average calibration factor is used for all valid samples taken during this field use. If the ratio does not lie between these limits, both the console dry gas meter and the standard dry gas meter may need to be recalibrated with the spirometer (see Appendix B).

INDEPENDENT VERIFICATION OF CALCULATIONS
SHOWN ABOVE

Explanation: Someone other than the person who performed the original work and associated calculations must verify that these calculations have been performed correctly.

_____
Signature

_____
Date

DETAILED PROCEDURES FOR INSPECTING AND MAINTAINING PITOT TUBES

These procedures should be read and followed before modifying pitot tubes and assigning 0.84 as the PTCF. Corrections and adjustments such as bending or filing of the pitot tubes can only be performed before the presample check and/or after the postsample check, never after the sample and before the postsample check. Study the drawings of the pitot tubes and become familiar with the angles and distances involved before proceeding further.

Both tubes must lie in the same plane. Obvious offset or bent tubes should first be straightened so that the tubes lie in one plane. Two 12-inch long aluminum angles or other suitable straight edges can be held along the sides of the pitot tube perpendicular to the openings to verfiy that one of the tubes is not twisted out of the plane through the pitot tubes or bent flat.

Misaligned, bent or out of tolerance pitot tubes can be corrected by filing and bending where necessary but $P_a = P_b \pm 0.063$ inches must be maintained; also, filing will eventually cause P_a or P_b to become less than 1.05 D_t. When this happens the tubes will need a major overhaul; therefore, do not file off more material than is absolutely necessary to meet the tolerances required.

Set the probe assembly in a vise so that the plane through the pitot tubes is vertical and the probe is horizontal. Check the vertical condition on both sides of the pitot tubes with the plumb level. Check the probe at several places with the plumb level. During the remainder of the angle measurements the probe must remain level and the pitot tubes must remain vertical. This makes angle θ equal to zero. Measure and record α, β, and γ angles in degrees, and the A distance in inches. Calculate A tan γ to get the Z distance. If this is greater than 0.125 correct this dimension first because this dimension is the most difficult one to adjust. Bending or straightening may be required.

Measure P_a, P_b, and D_t, perform the calculations and complete the data sheet if all items are within the acceptable limits. Since θ was set to zero, A tan θ, which is W, is also zero. P_a and P_b measurement can be accomplished with a steel scale and a sharp round pencil. Lay the pencil between the tubes to project the center line of the pitot tubes out to the scale held against the pitot tube tips. Make several measurements to demonstrate that you can reproduce the dimensions you obtain. Tube outside diameter, D_t, is nominally 3/8 inch on most probe assemblies. A dial caliper is helpful in measuring the A distance and D_t. It is also possible to use the caliper for P_a and P_b. Improved measuring techniques will develop with experience. Review the data sheet and verify that all of the measured items are within the acceptable limits. If any of the measurements indicate that an adjustment is required, make the adjustment before entering the data, or complete a new data sheet after the pitot tube is adjusted.

The following information may be useful:

1) If A is one inch, maximum γ is 7.125 degrees.
2) Maximum A is 1.125 inches and minimum A is 0.7875 inches for a 3/8 inch tube.
3) At maximum A, maximum γ is 6.33 degrees.
4) Minimum P_a, P_b is 0.39375 inches for a 3/8 inch tube.

PITOT TUBE INSPECTION DATA SHEET

Company Name: _____ Pre-sample Post Sample

Date _____ Date _____

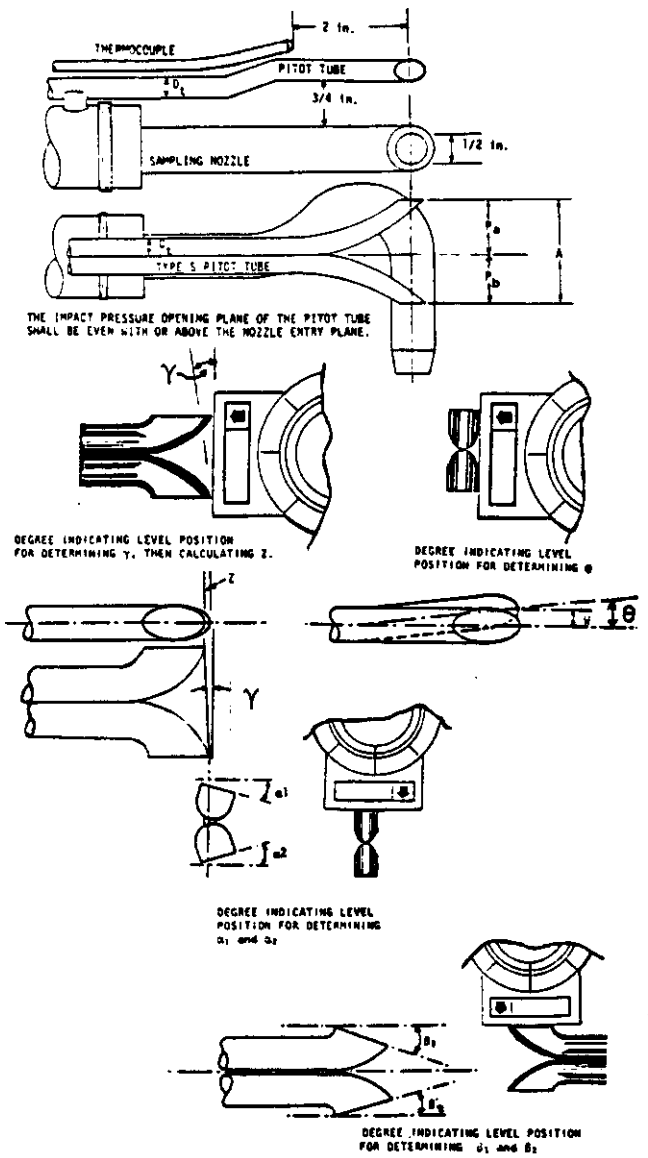

	level?	
	obstructions?	
	damaged?	
	$-10° < \alpha_1 < +10°$	
	$-10° < \alpha_2 < +10°$	
	$-5° < \beta_1 < +5°$	
	$-5° < \beta_2 < +5°$	
	γ	
	θ	
	A	
	$1.05\ D_t < P_a < 1.5\ D_t$	
	$1.05\ D_t < P_b < 1.5\ D_t$	
	$3/16" \leq D_t \leq 3/8"$	
	$A \tan \gamma < 0.125"$	
	$A \tan \theta < 0.03125"$	
	$P_a = P_b \pm 0.063"$	

Comments: _____

_____

Pitot tube/probe number _____ meets or exceeds all specifications criteria and/or applicable design features* and is hereby assigned a pitot tube calibration factor of 0.84.

Signature _____

Date _____

*See 40 CFR 60, Vol. 42, No. 160, Method 2. Verify the minimum 2 inch setback of the thermocouple and the minimum 3/4 inch separation between the pitot tube and the nozzle as shown at the top of this page.

INSTRUCTIONS FOR PITOT TUBE INSPECTION DATA SHEET

The following instructions for the Pitot Tube Inspection Data Sheet explains the sixteen items that are inspected or measured before and after each sample trip. Before beginning the pitot tube inspection read the detailed instructions. Mount the probe assembly in the vise so that θ is zero; this occurs when the plane through the pitot tubes is vertical. Distances are measured in inches and fractions of inches.

Level? Answer "yes" if the probe assembly was level during the angle measurement.

Obstruction? Answer "no" if the pitot tube is not obstructed.

Damaged? Answer "no" if the pitot tube is not apparently damaged. If you find that the pitot tube has been damaged when you attempt the presample check you must correct the damage before attempting to measure the angles, P_a, P_b, and A. If the damage occurred during the sample, the postsample check answer would be "yes". If the measured items are still within tolerances, the assigned PTCF of 0.84 still applies. If the damage during use places one or more of the measured items outside of the tolerances, the sampling results are questionable. Damage can only be repaired after the postsample check and before the presample check.

$-10° < \alpha < +10°$ Measure α_1 and α_2 and record the values in the appropriate space. α is the angle between the pitot tube opening plane and the horizontal plane when viewed from the end. Verify that α_1 and α_2 are within 10° of the horizontal plane.

$-5° < \beta < 5°$ Measure β_1 and β_2, record the values in the appropriate space. β is the angle between the pitot tube opening plane and the horizontal plane when viewed from the side. Verify that the β angles are within 5° of the horizontal.

γ Measure γ and record the value. γ is used to calculate Z; Z is the difference in the length between the two pitot tubes.

θ θ is the angle that the pitot tubes are rotated; initial conditions call for the pitot tubes to be rotated until the plane through the pitot tubes is vertical (θ is then zero).

A A is the vertical distance between the pitot tube opening planes. Measure A and record this distance.

P_a, P_b Measure and record P_a and P_b. These are the vertical distances between each of the pitot tube opening planes and the center line of the pitot tubes. Measure and record D_t, the tube external diameter, and calculate the minimum and maximum values of P_a and P_b. Verify that P_a and P_b are within these values. Verify that D_t is within the tolerances shown.

$A \tan \gamma < 0.125$ Calculate (A tan γ) and record. This is the "Z" distance mentioned above. Verify that (A tan γ) is less than 0.125.

$A \tan \theta < 0.3125$ Since θ was set to zero, (A tan θ) will also be zero. This is the "W" distance mentioned in the accompanying procedures.

$P_a = P_b \pm 0.063"$ Verify that P_a and P_b are equal within this tolerance (approximately 1/16 inch). Answer "yes" if $P_a = P_b$ within approximately 1/16 inch.

NOZZLE INSPECTION AND MEASUREMENT DATA SHEET

Company Name _____ Date Sampled _____ Nozzle Number _____

Presample Inspection

I hereby certify that the above referenced nozzle appears to be round, sharp-edged, free of nicks and dents and is judged acceptable for use at this time.

Last Previously Measured Nozzle Area _____ ft^2

_____
signature

Date Measured _____

date _____

Postsample Measurement

Measure three diameters as shown; measurement is in inches; record below; perform calculations. *

1. _____ 2. _____ 3. _____

Average Diameter _____

Area = $\frac{\pi D^2}{4 \times 144}$ = _____ ft^2

This area shall be used in data reduction.

_____
signature

date _____

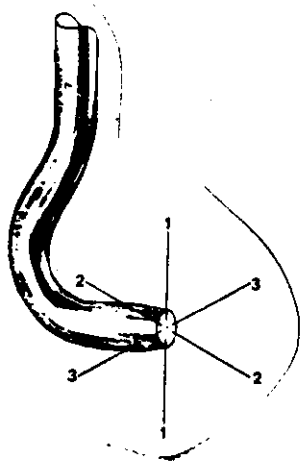

* Maximum allowable difference between largest diameter and smallest diameter is 0.004 inches

Portable Barometer Calibration Form

Company Name _____ Dates Sampled _____

Presample Calibration

Uncorrected local laboratory barometer reading _____ mm Hg
Temperature reading at barometer site _____ °C
Correction to be subtracted _____ mm
Corrected local laboratory barometer reading _____ mm Hg
Corrected local laboratory barometer reading _____ Inches Hg

I certify that I have adjusted portable barometer number _____ to the corrected local barometric pressure shown above.

_____
signature

date _____

Post Sample Calibration Check

I certify that I have checked portable barometer number _____ and that it agrees with the laboratory barometer within one tenth of an inch of mercury.

_____
signature

date _____

FIELD DATA FOR GROUND LEVEL SAMPLING

Clock Time	Elapsed Time in Minutes	Manometer Reading Inches H_2O (Rotameter)	Ambient Temperature °F (Field Conditions)	Barometric Pressure Inches Hg	Wind Direction	Wind Speed Miles/hr

To laboratory:

Analyze the filter for TSP and the following elements: _____, _____, _____,

_____, _____, _____,

FIELD DATA FOR GROUND LEVEL SAMPLING

Upwind _____ or Downwind _____ Sample Date _____

Company Name _____ Account Number _____

Nearest City or Community _____ County _____

Type of Facility _____ TACB Region _____

Filter No. _____ Sampler Number _____

Start Time _____ Stop Time _____ Total Time Minutes _____

Remarks: _____

_____

_____

_____

_____

Sketch Showing This Sampler Location

_____

Signature of Operator

DATA REDUCTION FOR GROUND LEVEL SAMPLING

Company Name _____ Sample Data _____ TACB Region _____

Type of Facility _____ County _____ City _____ Account No. _____

Downwind sample, Information and Data

Upwind sample, Information and Data

DOWNWIND

Manometer Reading Inches H_2O (Rotameter)	Flow Rate at Calibrated cond. in cu. ft/min.

DOWNWIND

	Sampler Number	
	Filter Number	
	Sample Time in Minutes	
	Aver. Temp. at Field Cond. °F	
	Aver. Bar. Press Field Cond. In. Hg.	
	Calib. Temp. °F	
	Calib. Press. In. Hg.	
	Clean Filter Weight in grams*	
	Exposed Filter Weight in grams*	
	Filter Wt. Gain in micrograms	
	Aver. Flow Rate in cu. ft./min.	
	Uncorrected Vol. in cu. ft.	
	Vol. at Field Conditions, in cu. ft.	
	and in cu. meters	
	Concentration in $\mu g/m^3$	

NET GROUND LEVEL CONCENTRATION OF TSP

_____

$\mu g/m^3$

UPWIND

Manometer Reading Inches H_2O (Rotameter)	Flow Rate at Calibrated cond. in cu. ft/min.

UPWIND

Reference Information:

*Clean Filter Weight and Exposed Filter Weight will be provided by the laboratory when not available in the regional office.

Sample Time, Average Temperature at Field Conditions, Manometer Reading, (or Rotometer Reading) and Average Barometric Pressure are obtained from Field Data for Ground Level Sampling. Flow rate, calibration temperature and calibration pressure are obtained from the calibration curve. Weight Gain of the Filter is provided by the laboratory. Average flow rates (Upwind and Downwind) are the averages of the tabular values listed above. Uncorrected Volume is the product of "Aver. Flow Rate" times "Time". This volume is corrected to field conditions as follows:

$$\text{Vol. at Field Conditions, ft}^3 = \left(\begin{matrix}\text{Uncorrected} \\ \text{Volume, ft}^3\end{matrix}\right) \sqrt{\frac{T_{field} \times P_{calib.}}{T_{calib.} \times P_{field}}}$$

(Absolute pressure and temperature are required)

This volume in cubic feet is multiplied by 0.02832 m^3/ft^3 to obtain the volume in cubic meters. Filter weight gain in micrograms is divided by the volume in cubic meters to obtain concentration. Upwind concentration is subtracted from downwind concentration to obtain "Net Ground Level Concentration".

ACL No. _____

Analytical Results in $\mu g/m^3$

This page is to be completed by the laboratory.

	$\mu g/m^3$	Pollutant	$\mu g/m^3$	
D				
O				
W				U
N				P
W				W
I				I
N				N
D				D

Remarks _____

_____

Analyzed By _____

Date Received _____ Date Reported _____

Field Data Sheet for NO_x Concentration
(Flow-Through Bomb Method)

Company Name _____ Date _____

Location _____ Person Responsible for these

Stack/Source _____ Samples _____

Use this data sheet when bomb moisture, BW_B, is saturated. If pollutant mass rate is also required, stack (duct) velocity, cross sectional area, moisture fraction and temperature are required.

Sample Number	Sample Point Location	Sample Time	Inject Absorber Time	Bomb Identification	Baro Press In. Hg	Bomb (ambient) Temp °R	Purge Rate	Purge Time	Condenser Observation (saturated or not saturated)

ORIFICE CALIBRATION SHEET

ORIFICE # _____ LOCATION _____ DATE _____

PLATE	INITIAL TRIP METER	FINAL TRIP METER	MEASURED VOLUME Vm	M_1	Pm	TIME t	BAROMETRIC PRESSURE P_1	TEMPERTURE T_1	ACTUAL VOLUME V_1	ACTUAL FLOW Q_1
18										
13										
10										
7										
5										

NOTES AND CALCULATIONS

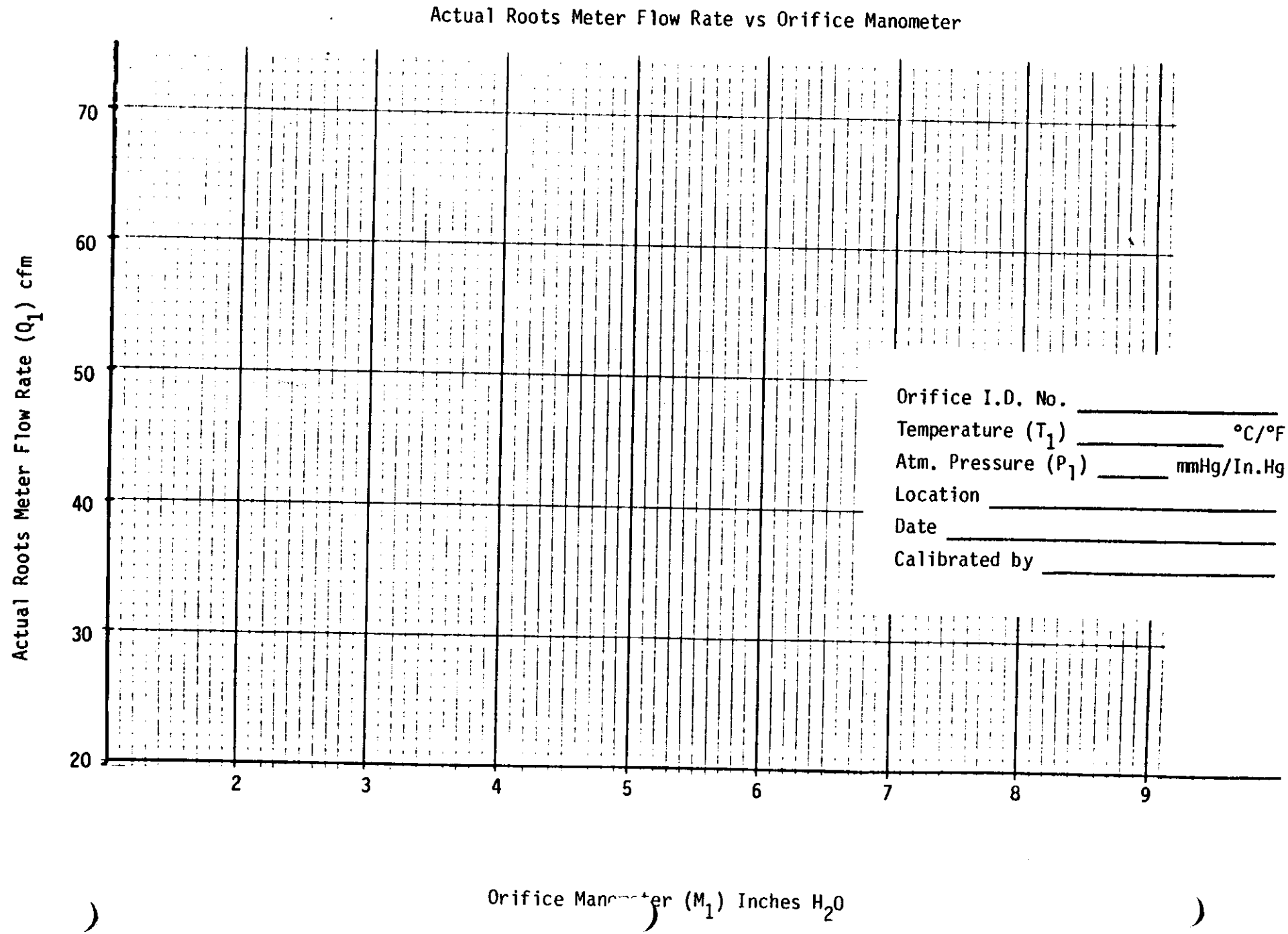
Actual Roots Meter Flow Rate vs Orifice Manometer
Actual Roots Meter Flow Rate (Q_1) cfm
70
60
50
40
30
20
2
3
4
5
6
7
8
9
Orifice Manometer (M_1) Inches H_2O
Orifice I.D. No. _____
Temperature (T_1) _____ °C/°F
Atm. Pressure (P_1) _____ mmHg/In.Hg
Location _____
Date _____
Calibrated by _____

HI-VOL CALIBRATION WORKSHEET

TECHNICIAN _____

HI-VOL # _____
MOTOR HOUSING # _____
ORIFICE # _____

P_1 ____ mmHg
T_1 ____

DATE _____
LOCATION _____

PLATE	M_2	CHART	M_3	R_2	Q_1	BAROMETRIC PRESSURE P_2	TEMP T_2	Q_2	REMARKS
18									
13									
10									
7									
5									

NOTES AND CALCULATIONS:

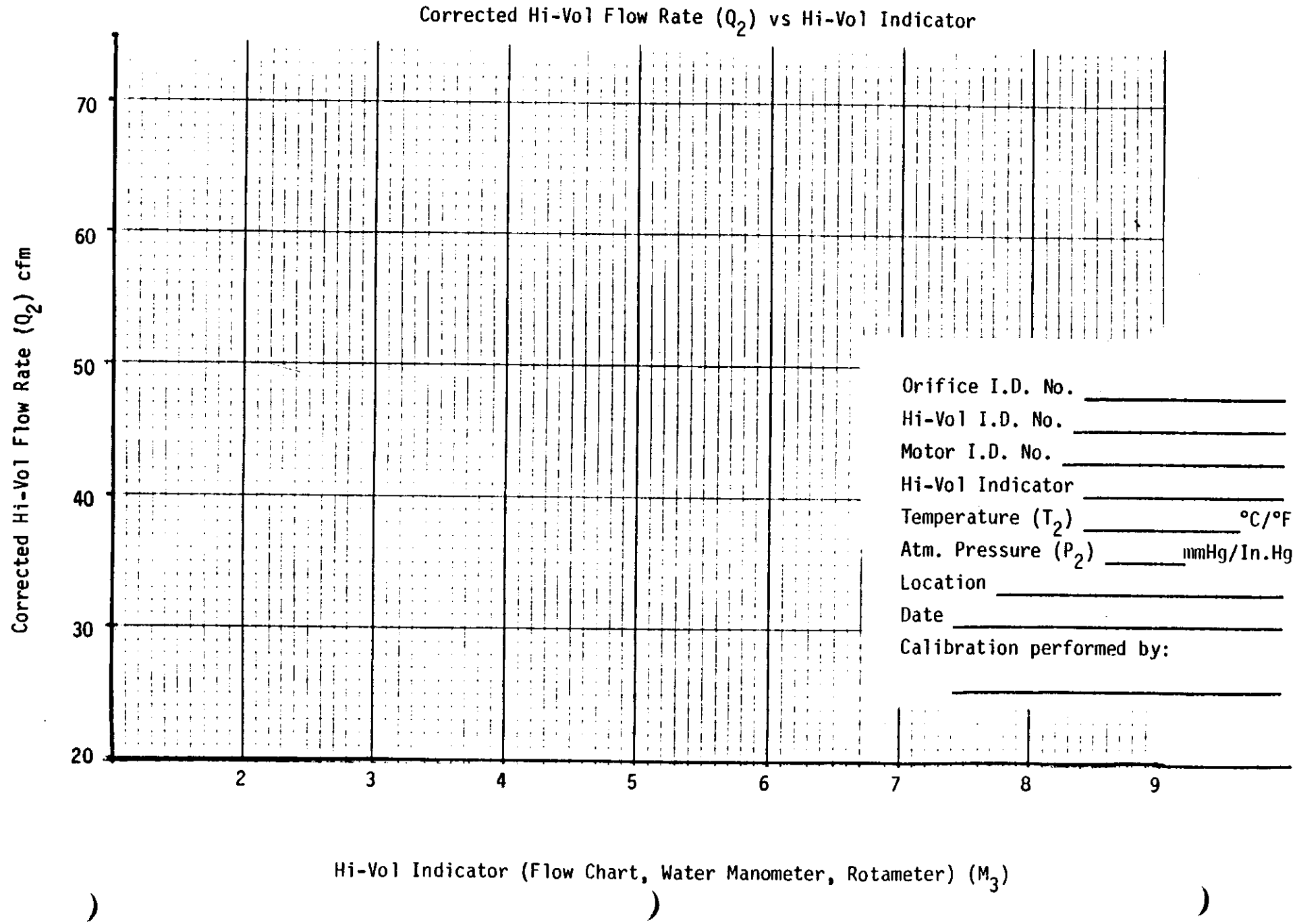
Corrected Hi-Vol Flow Rate (Q_2) vs Hi-Vol Indicator
Corrected Hi-Vol Flow Rate (Q_2) cfm
70
60
50
40
30
20
2
3
4
5
6
7
8
9
Hi-Vol Indicator (Flow Chart, Water Manometer, Rotameter) (M_3)
Orifice I.D. No. _____
Hi-Vol I.D. No. _____
Motor I.D. No. _____
Hi-Vol Indicator _____
Temperature (T_2) _____ °C/°F
Atm. Pressure (P_2) _____ mmHg/In.Hg
Location _____
Date _____
Calibration performed by:
_____

Calibration of a Telmatic Rotameter

Date _____ Telmatic I.D. Number _____

Calibrator _____ Mass Flowmeter Number _____

Mass Flowmeter Cal. Date _____ Voltage Correction Factor _____

Telmatic Rotameter Setting (Center of Ball)	Voltage Reading or Mass Flowmeter Reading (lpm)	Actual Flow Rate (lpm)
1.5		
1.6		
1.7		
1.8		
1.9		
2.0		
2.1		
2.2		
2.3		
2.4		
2.5		
2.6		
2.7		
2.8		
2.9		
3.0		

Calculations:

VEGETATION SAMPLING FIELD
INFORMATION FORM

Date _____ Approximate Time of Day _____

County _____ TACB Region _____

Location of Sample Site _____

_____

Type of Vegetation Collected _____

_____

Remarks: _____

_____

Note that samples must be accompanied by the appropriate sample analysis request forms when submitted to the laboratory for analysis. Sketch a map of the sample site in the space below.

_____

Person Responsible for
Samples

SOURCE NAME

ADDRESS

CITY | STATE | ZIP

PHONE | SOURCE ID NUMBER

PROCESS EQUIPMENT | OPERATING MODE

CONTROL EQUIPMENT | OPERATING MODE

DESCRIBE EMISSION POINT

HEIGHT ABOVE GROUND LEVEL | HEIGHT RELATIVE TO OBSERVER

DISTANCE FROM OBSERVER | DIRECTION FROM OBSERVER

DESCRIBE EMISSIONS

EMISSION COLOR | PLUME TYPE: CONTINUOUS ☐ FUGITIVE ☐ INTERMITTENT ☐

WATER DROPLETS PRESENT NO ☐ YES ☐ | IS WATER DROPLET PLUME ATTACHED ☐ DETACHED ☐

AT WHAT POINT IN THE PLUME WAS OPACITY DETERMINED

DESCRIBE BACKGROUND

BACKGROUND COLOR | SKY CONDITIONS

WIND SPEED | WIND DIRECTION

AMBIENT TEMPERATURE | RELATIVE HUMIDITY

SOURCE LAYOUT SKETCH — DRAW NORTH ARROW

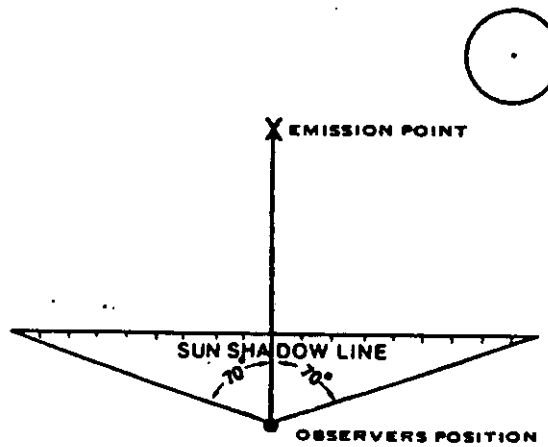

OBSERVATION DATE | START TIME | STOP TIME

Min \ Sec	0	15	30	45	Min \ Sec	0	15	30	45
1					31				
2					32				
3					33				
4					34				
5					35				
6					36				
7					37				
8					38				
9					39				
10					40				
11					41				
12					42				
13					43				
14					44				
15					45				
16					46				
17					47				
18					48				
19					49				
20					50				
21					51				
22					52				
23					53				
24					54				
25					55				
26					56				
27					57				
28					58				
29					59				
30					60				

AVERAGE OPACITY FOR HIGHEST PERIOD | NUMBER OF READINGS ABOVE ____ % WERE

COMMENTS

RANGE OF OPACITY READINGS — MINIMUM — MAXIMUM

OBSERVER'S NAME (PRINT)

OBSERVER'S SIGNATURE | DATE

ORGANIZATION

I HAVE RECEIVED A COPY OF THESE OPACITY OBSERVATIONS

SIGNATURE

TITLE | DATE

CERTIFIED BY | DATE

VERIFIED BY | DATE

EPA TH 0101

APPENDIX E

RESERVED

APPENDIX F

ORSAT ANALYSIS

General

One of the best known and simplest gas-analysis apparatus is an Orsat analyzer. It is used to determine the composition and molecular weight of gases. This is a volumetric method involving selective absorption or oxidation. It is usually used to detect carbon dioxide, oxygen, and carbon monoxide.

Absorptions are carried out in either contact pipettes or in bubbler pipettes, and the decrease in gas volume as the absorptions are successively made is a direct measure of the volume of the particular component being absorbed. Oxidation is accomplished by means of a catalyst and copper oxide tubes. There are many kinds of Orsat analyzers commercially available. The one discussed here is a cabinet model flue-gas analyzer from the Burrell Corporation.

This Orsat analyzer determines the compositions of CO_2, O_2, and CO present in a gas on a dry volume basis by passing the gas through a series of scrubbing solutions in contact pipettes where each constituent gas is selectively removed. The residual gas is normally considered to be nitrogen. In converting gas concentration levels from a dry to a wet basis, corrections for moisture content are made. EPA Reference Method 3 describes collection and analysis of a gas sample.

Reagents and Auxiliary Solutions

General requirements for reagent solutions are:

1) High solubility for a specific component and stability of the compound formed in the solution

2) Short absorption time

3) Low vapor pressure (less hazardous)

4) No corrosive action on rubber tubing

5) Will not cause the stopcocks in the manifold to stick

The following commercially available chemical reagents are recommended for stack gas analysis:

CO_2: Potassium or sodium hydroxide solution (KOH or NaOH) or "Disorbent" (this solution also absorbs H_2S, SO_2 and SO_3

slowly).

O_2: Alkaline pyrogallol solution (a mixture of pyrogallic acid and KOH solution) or "Oxsorbent" (a stabilized chromous chloride solution), both of which also absorb CO_2 in very small amounts.

CO: Cuprous chloride solution, which will also absorb O_2, forms $Cu_2Cl_2 \cdot 2CO$ when brought into contact with CO. This is a relatively unstable compound and when this absorbent is used, copper wire or gauze should be placed inside the pipette to prevent oxidation.

WARNING: This solution should be kept out of contact with air.

Cosorbent powder, which is mixed with sulfuric acid and DI water, may also be used. This solution forms the stable compound $Cu_2SO_4 \cdot 2CO$ (cuprous sulfate and carbon monoxide) on contact with CO, but will also absorb ethylene, propylene, acetylene and oxygen slowly.

Burette Solution: Saturated, acidified solution containing 20% Na_2SO_4 by weight, 5% H_2SO_4 by volume, and a few drops of methyl orange for color. This solution is used as a confining liquid in gas burettes and reservoirs.

Maintenance, Pitfalls, and Replenishment

Lubrication of stopcocks: Proper lubrication with an acid-and-alkali-resistant grease will prevent the stopcock from leaking, sticking, and wearing. To lubricate a stopcock, first the plug and shell are cleaned; then a small amount of stopcock grease is applied on the opposite sides of the plug between the bore openings. The plug is then inserted so that the bore openings coincide. The bore is then pressed into place and turned until a grease film covers the entire surface. An excessive amount of grease should not be used. The stopcocks should be cleaned and regreased every three months, or at the first indication of thinning or contamination.

Use of confining liquid (burette solution): Aqueous salt solution is used to fill the burette and leveling bulb. Water alone is not adequate as a confining liquid since some of the gas sample may be absorbed into the water. A few drops of methyl orange will facilitate the observation of the solution in the burette, and will also indicate any change from an acid to an alkaline condition. The solution should be replaced when the pink color disappears.

NOTE: Exposure to cold may cause crystallization of the solution. This can be remedied by dilution with tap or distilled water until no further crystallization occurs.

Filling the pipettes: The pipettes should be opened to the atmosphere through the manifold and the rubber stopper and gas bag removed from each pipette. The pipettes should be washed with warm water and rinsed with DI water. Care should be taken not to splash reagents on skin or clothes.

WARNING: When the cosorbent pipette is washed, the pipette should not be shaken because the resulting heat of reaction may cause excessive heating of the pipette.

The first pipette is half-filled with disorbent solution. For the oxygen-absorption pipette, alkaline pyrogallol solutions 1 and 2 are mixed in an 8 to 1 volume ratio, and the second pipette is filled approximately half-full. For preparation of the cosorbent solution, 200 ml of concentrated H_2SO_4 is added to 10 ml of water and mixed on a magnetic stirrer. While the solution is warm, the cosorbent powder is added in small increments while the solution is stirred to prevent coagulation. Approximately half of the powder pack (~120 grams) is used. When complete mixing is achieved, the third pipette is filled approximately half-full with this solution. Alternately, acid cuprous chloride solution may be used as the CO absorbent solution. If two pipettes are used for CO, the first pipette is filled with acid cuprous chloride and the second filled with cosorbent or acid cuprous chloride. All of the pipettes are then reconnected to the manifold and the liquid in each pipette is raised to the reference mark on its capillary stem.

Rubber connections: At all junction points where rubber tubing is used, e.g. pipettes to manifold, glass-to-glass contact should be maintained to avoid excessive space.

Leak checking the appartus: The liquids in all of the pipettes should be leveled at the proper points, and then all pipette stopcocks closed. The burette leveling bulb is then lowered and approximately 100 ml of air is drawn into the system. The inlet stopcock of the manifold is then closed. The leveling bulb is raised to the top of the Orsat while the liquid level in the burette is checked. If leakage exists in any of the stopcock or rubber connections, the liquid level in the burette will rise.

Cleaning the manifold: When using the apparatus it is possible for solution to be drawn from a pipette past the manifold stopcock and into the manifold. If this happens, the manifold should be flushed with acidulated water and the analysis repeated; otherwise, the small amount of solution remaining in the manifold will have an absorption action on the gas sample and may cause errors in the analysis.

Replenishment: Absorbent solutions should be changed every three months or when coagulations or color changes appear. Frequent use of the Orsat may necessitate more frequent replenishment.

General Remarks on Operation

1) Before the start of analysis, every pipette solution should be checked for mobility through the capillary tubes inside the pipette by using air to move the liquid up and down through these tubes. The liquid level is then brought to the reference mark on the capillary stem of the pipette.

2) The Orsat bag containing the gas sample is then connected to the inlet of the manifold and the manifold line is purged three or four times with sample gas.

3) Approximately 100 ml of sample gas is drawn into the burette and then the burette solution and reservoir bottles are held at the same level in the burette; i.e., the 0 ml mark. The manifold stopcock is then closed.

4) The stopcock of the first pipette is opened and the sample gas is passed through the solution several times before the solution level in the pipette is brought back to the reference mark. The volume decrease in the burette is then read. This procedure is repeated until two consecutive readings show no change. This total volume decrease (ml) is the volume % of CO_2 in the sample gas.

5) Procedure (4) is then repeated for the second and third pipettes respectively.

6) Volume measurements in gas analysis are commonly made at constant pressure (usually atmospheric), eliminating the necessity for corrections. Atmospheric pressure is established in the burette by holding the leveling bottle alongside the burette at such a height that the solution in the burette and leveling bottle are at the same level. This balancing of the pressure must be performed before each reading of gas volume in the burette in procedures (3), (4), and (5).

7) The burette is surrounded by a water jacket which serves to maintain the gas sample at constant temperature so that temperature corrections are unnecessary. Usually the temperature of the water in the jacket will not change significantly during the course of an analysis. The temperature of the gas sample should be as close as possible to that of the water before the sample is brought into the burette.

8) Because the gas in the burette is kept saturated with water by the burette solution, the results obtained are on a dry basis.

9) After the analysis is finished it is good practice to drain the burette solution into the leveling bottle to reduce the possibility of burette breakage during transit.

APPENDIX G

EMISSION PEAKS IN STACK SAMPLES

General

Intermittent periods of stack emissions that are higher than normal emissions and are not periods of upset are normally included in sampling operations. This appendix describes procedures for averaging such emission peaks over the daily operating cycle. As discussed in Chapter 5, emission averaging is not applicable to cyclic processes, and is also not meant to imply that all situations of emission peaks will be allowed averaging. Results should always be reported with and without averaging if averaging is used. Peaks of emissions may be due to various events such as soot blowing, grate cleaning, or similar occurrence, or a combination of occurrences. Peaks from single type occurrences and peaks from multiple type occurrences are discussed. The schedule and duration of all occurrences must be known since the averaging calculations depend on the time ratios.

Single Type Occurrences

Averaging of a single type of intermittent occurrence such as soot blowing (SB) over the daily operating cycle on a time weighted basis is done as follows:

$$PMR_{AVG} = PMR_{SBR} \frac{(A+B)S}{AR} + PMR_{NOSB} \left(\frac{R-S}{R} - \frac{BS}{AR} \right)$$

where PMR = Pollutant mass rate (lb/hr)

PMR_{AVG} = Average PMR over daily operating time

PMR_{SBR} = Average PMR of sample(s) containing SB

PMR_{NOSB} = Average PMR of sample(s) with no SB

A = Hours of SB during sample(s)

B = Hours not SB during sample(s) containing SB

R = Average hours of operation per 24 hours

S = Average hours of SB per 24 hours

At least one sample must contain soot blowing and at least one sample must contain no soot blowing. The PMR while soot blowing may be derived from the above information, but should be considered for informational

purposes only unless sufficient sampling time contained soot blowing for an accurate determination.

If the duration of the sampled soot blowing occurrence is longer than the duration of the sample and if the PMR during soot blowing varies such that a representative PMR_{SBR} cannot be obtained with one sample, then two representative portions of the soot blowing cycle should be sampled and treated as multiple type occurrences. Multiple type occurrences are discussed in the following section.

Multiple Type Occurrences

If more than one type of intermittent operation occurs, averaging is accomplished by including each type of occurrence in separate samples. Examples of multiple occurrences are: separate periods of different types of soot blowing, both soot blowing and grate cleaning, extended periods of soot blowing or grate cleaning during which the PMR changes but which cannot be represented by a single sample, and multiple sources with soot blowing that exhaust into a common stack.

Multiple type occurrences may be any combination of intermittent operations. The following equation is written for soot blowing (SB) and grate cleaning (GC):

$$PMR_{AVG} = PMR_{SBR}\frac{(A+B)S}{AR} + PMR_{GCR}\frac{(C+D)G}{CR} + PMR_{NO}\left(\frac{R-S-G}{R} - \frac{BS}{AR} - \frac{DG}{CR}\right)$$

where PMR = Pollutant mass rate (lb/hr)

PMR_{AVG} = Average PMR over daily operating time

PMR_{SBR} = Average PMR of sample(s) containing SB

PMR_{GCR} = Average PMR of sample(s) containing GC

PMR_{NO} = Average PMR of sample(s) with no SB or GC

A = Hours of SB during samples

B = Hours not SB during samples containing SB

C = Hours of GC during samples

D = Hours not GC during samples containing GC

S = Average hours of SB per 24 hours

G = Average hours of GC per 24 hours

R = Average hours of operation per 24 hours

At least one sample must contain some of each type occurrence, and at least one sample must contain no occurrence of any type. The samples

containing an occurrence must contain only one type occurrence; i.e., if a sample contains soot blowing, it must not contain grate cleaning.

The above equation was derived considering two different type occurrences. The principle can be applied to any number of occurrence types and a similar equation can be derived. The pattern which can be seen between the equations for single type occurrences and multiple type occurrences should perpetuate.

APPENDIX H

STACK SAMPLING CYCLONIC FLOW

General

Conventional sampling procedures are not applicable to stacks with cyclonic flow due to the presence of non-axial flow components. This appendix describes a method for sampling stacks with cyclonic flow; i.e. flow with tangential velocity components. Cyclonic flow may exist after cyclones, tangential inlets, or other configurations that may tend to induce swirling.

Several different approaches have been devised to minimize the biasing effects of non-axial flow. The method discussed in this appendix utilizes the alignment approach to reduce or eliminate the bias produced by misalignment of the sampling nozzle and pitot tubes with the path of the particles. Sampling results obtained with this method must be reviewed for possible inherent bias (see section entitled Accuracy Considerations) to determine acceptability for any purpose.

Accuracy Considerations

As discussed in Chapter 5, small (light) particles tend to follow the flow stream while large (heavy) particles tend to be affected more by their own inertia than by the flow stream. Due to the effects of the cyclonic condition and centrifugal action, components of radial velocity should be imparted to large particles, while small particles continue to follow the flow stream. If the sampling ports are sufficiently downstream of the onset of cyclonic flow (at least two stack diameters), large particles should have moved to the vicinity of the stack wall and no longer have radial velocity components. For this reason, this method does not consider components of radial velocity, and the term "total velocity vector" refers to the resultant of the vertical (parallel to the stack axis) velocity vector and the tangential velocity vector.

Although sampling by the alignment approach is done in the direction of flow of the stack gas at each sample point, bias may still be produced if the path of the particles is not in the direction of flow. Small particles follow the flow stream and large particles at the stack wall have no radial velocity components so the only source of bias should be large particles near the stack wall that may not be moving in the direction of flow, i.e. unequal tangential velocity components. An indication of the distribution of large and small particles may be obtained by comparing the probe wash and cyclone catch to the filter and impinger catch. Large particles that do not follow the flow stream should be caught in the probe and cyclone, while small particles should be caught on the filter and in the impingers. Such comparison may yield

information on possible bias in the sample since bias is produced by large particles, but should not be considered to be an accurate determination of particle size distribution. If the large particles were not moving in the direction of flow in the stack, the large/small particle proportion in the sampling train may not be the same as in the stack. If all particles are moving parallel to the direction of flow, no bias should be produced.

If the pollutant is or behaves as a gas, no bias is produced by particles moving in directions other than parallel to the flow stream. This method provides an accurate determination of velocity and flow rate, which are requirements of gaseous sampling (Chapter 6). The larger the proportion of the total catch that behaves as a gas (filter and impingers), the greater the confidence in the sample being without bias.

Determining Cyclonic Flow

The existence of cylconic flow is determined by measuring the flow angle at each sample point. The flow angle is the angle between the direction of flow and the axis of the stack. If the average of the absolute values of the flow angles is greater than 20°, cyclonic flow exists to such an extent that special sampling procedures are necessary.

The direction of flow is determined by locating the pitot tube null position at each sample point. The pitot tube null position at a sample point is determined by rotating the pitot tubes around the axis of the probe until a zero manometer reading is obtained. Advance knowledge of the direction of the tangential flow component is helpful for the initial rotation of the pitot tubes since the plane through the pitot tubes must be perpendicular to the total velocity vector to obtain a null reading on the manometer. The angle between the plane through the pitot tubes in the null position and the stack cross-sectional plane is equal in magnitude to the flow angle; the magnitude of the angle may be measured with the pitot tubes in the null position or after the pitot tubes have been rotated 90° into the flow stream for velocity measurement. A magnetic protractor-level is a convenient angle measuring device; scribe marks on the sample box with a pointer on the probe (or vice-versa) may be satisfactory if proper alignment with the axis of the stack and the plane of the pitot tubes is maintained.

In some cases of cyclonic flow, the flow angle may be greater than 90° at some sample points, indicating flow back into the stack at those particular sample points. If the flow angle is greater than 90°, it is recorded as 90° so that sample points with negative velocity are considered to have no vertical velocity (cos 90° = 0). The existence of sample points with negative velocity may be determined with the pitot tubes aligned with the flow stream; the manometer deflection will indicate the direction of flow.

Sampling Procedure

Standard isokinetic sampling procedures (Chapters 4 and 5) are followed except for adjustment of the sampling time and pitot tube and nozzle orientation at each sample point.

Preliminary Velocity Traverse and Calculations

Knowledge of the flow angles at all sampling points is necessary to insure that the total sample time and total sample volume is adequate; therefore, flow angles are normally measured during the preliminary velocity traverse. The complete set of angles should be measured in as short a duration of time as possible in case the position of the flow cyclone in the stack is changing with time. After the measurement of flow angles is complete, a base sampling time for each sampling point is selected. The actual sampling time at each sample point is the base sampling time multiplied by the cosine of the flow angle at that sample point.

All preliminary procedures and calculations are performed with preliminary data as measured in the direction of flow similar to standard isokinetic sampling procedures. The actual sampling time at each sample point (base time x $\cos\alpha$) is used in preliminary calculations. As discussed earlier, if zero or negative flow exists at any sample point, the flow angle is recorded as 90° and the actual sampling time at that sample point is zero ($\cos 90° = 0$). The base time should be large enough so that the total sample volume is adequate and that the sampling time at the sample point with the shortest actual sampling time is long enough to record data. Appendix D contains data forms for recording angles and sampling times along with forms for standard stack sampling.

Sampling

Sampling is performed with the nozzle and pitot tubes oriented in the direction of flow at each sampling point with isokinetic conditions maintained according to the ΔP measured in the flow stream. As discussed in the section on Accuracy Considerations, radial velocity components are not considered since large particles should have no radial velocity components. Since large particles should be concentrated near the stack wall, the accuracy of sampling at the outer points is of particular importance. The precalculated sampling time at each sampling point is the base time multiplied by the cosine of the flow angle. For instance, if the base sampling time is four minutes and the flow angle is 60° at one sample point, the actual sampling time at that sample point is two minutes ($\cos 60° = 0.5$). It is suggested that sampling at each sample point be started at some increment of a minute or that a timer be used for each sample point to avoid confusion with various odd minutes and seconds. The flow may be stopped for short

periods between sample points, but the off-time must not be so long that the sample could be contaminated by particles entering the sampling train while the flow is stopped.

In some cases of cyclonic flow, some sample points may have negative flow or flow back into the stack (flow angle > 90°) rather than out the stack. These sampling points are treated as points with zero flow and zero actual sampling time. This situation may cause the results to be biased high if some of the pollutant sampled at the sample points with positive flow is also present at the sample points with negative flow. Two separate samples may produce more accurate results in such a case - one sample for positive flow and one sample for negative flow with the numerical difference being the emission rate.

The field check of percent isokinetic is made using actual parameters measured during sampling; velocity is used as measured in the flow stream and time is the sum of the adjusted (actual) sampling times for the separate sample points. The isokinetic check could also be performed by calculating the vertical velocity component at each sample point and using the total base time as explained in the section on Data Reduction, but this approach is considered too cumbersome for field use.

Data Reduction

Data reduction procedures must account for the differences between the total velocity vectors (defined by α and ΔP) and the exiting components of these vectors. Since the average exiting velocity must be used to calculate stack flow rate (ACFM or SCFM), effective stack height, and, in turn, allowable emission rate and standard effective stack height, data reduction procedures must average only the vertical components of the total velocity vectors. Different data reduction approaches may yield correct results; the data reduction procedures discussed in this section are based on adjustment of individual ΔP readings to correspond to vertical velocity components. Standard data reduction procedures are discussed in Chapter 8 and only the adjustments to the input data necessary to apply the standard procedures are discussed here.

Each field ΔP reading (as measured in the flow stream) is multiplied by the square of the cosine of the flow angle (α) corresponding to each ΔP reading. Data reduction input ΔP is $(\cos^2 \alpha)$ (field ΔP). Input sample time per sample point is the total base sampling time per sample point and the total sampling time input is the total base time (base time) (number of sample points). All other parameters are input as measured. The data sheets in Appendix D should be helpful in organizing cyclonic flow data.

APPENDIX I

CORRECTIONS FOR EXCESS AIR AND EXCESS O_2

General

When a combustion process receives more air than the amount required to supply the stoichiometrically correct amount of oxygen (O_2), it is defined to be operating with "excess air." The amount of excess air is expressed as a percentage of stoichiometric air, thus "zero percent excess air" means stoichiometric conditions, and "50% excess air" means that the supply of air is 1.5 times the amount of air necessary to supply the necessary O_2 for combustion.

An excess air correction factor (EACF) is a number between zero and one such that when it is multiplied by a flow rate or a volume of effluent from a combustion process, it "corrects" the flow rate, volume, or concentration to some specified amount of excess air. The correction is normally applied only if the process is operating at greater than a specified amount of excess air (50%, 0%, etc.).

In the general case, the correction of a stack effluent flow rate or a nozzle volume (see Chapter 8) for excess air utilizes a knowledge of the composition and flow rate of the streams entering and exiting the combustion process. With this information, the combustion equations for all combustible components can be written and the amount of oxygen required for stoichiometric combustion can be calculated. This amount of oxygen can be used to calculate the amount of air required and the volume of combustion components obtained. The effluent volume at the specified fraction of excess air can be calculated. The amount of air entering the process is not normally available; therefore, sampling data on the composition of the effluent is required to complete the balances. Separate balances can usually be written around the combustion chamber; typically, an oxygen balance and a nitrogen balance. For certain processes, additional balances can be written; for example, a sulfur balance can be written for a tail gas incinerator. Portions of the input information, such as flow rate of one of the streams, may be unknown but can usually be obtained from simultaneous solutions of the combustion equations. Usually the excess air correction factors can be determined in two ways from each balance if stack sampling data is available. It is important to note that incinerators and other combustion processes may have nitrogen (N_2) and/or oxygen (O_2) contained in the fuel or waste streams. Therefore, the amount of N_2 or O_2 in the stack effluent may not result solely from the introduction of air having a fixed ratio of 21% O_2/79% N_2.

Special Cases

In certain special cases where the only N_2 and O_2 that enter the combustion process do so through atmospheric air and no carbon monoxide (CO) is added to the process, the EACF for any particular amount of excess air can be calculated as follows:

$$EACF_X = 1 - \frac{(1+x)O_2 - (1+x)(0.5)\ CO - (x)\left(\frac{0.21}{0.79}\right) N_2}{0.21}$$

where x is the fractional amount of excess air and O_2, CO, and N_2 are the orsat fractions (dry basis) in the stack effluent

For x = 0.4 (40% excess air) the above equation reduces to:

$$EACF_{0.4} = 1 - \left[\frac{O_2}{0.15} - \frac{CO}{0.3} - \frac{N_2}{2.0}\right]$$

For x = 0.5 (50% excess air) the above equation reduces to:

$$EACF_{0.5} = 1 - \left[\frac{O_2}{0.14} - \frac{CO}{0.28} - \frac{N_2}{1.58}\right]$$

Corrections to zero precent excess air and zero percent excess oxygen are of special interest for processes where O_2 and N_2 enter with the fuel or waste stream. If the applicable regulation or standard requires correction to zero percent excess air or oxygen, then the O_2 and the associated N_2 is subtracted from the measured effluent (or nozzle volume) to give the corrected volume.

Use of Reduced Nozzle Volume and Reduced Effluent Flow Rate

When an applicable emission standard is expressed in units of concentration, the EACF is applied to the nozzle volume to calculate a corrected emission concentration. When an applicable emission standard is based on flow rate, the stack effluent flow rate is reduced by the EACF before the allowable emission rate is calculated. The EACF does not affect the PMR.

Excess Air Estimations

Determining the stoichiometric amount of oxygen needed for combustion is usually the most involved part of excess air calculations and requires knowledge of the chemical composition of the fuel and other combustibles. Detailed analysis of the fuel and other combustibles for purposes

of determining stoichiometric oxygen demand may be avoided in cases where estimations will provide adequate excess air data.

If the fuel and other combustibles are hydrocarbons, the stoichiometric oxygen demand should be between one and two times (volumetrically) the amount of carbon dioxide in the exhaust. Burning methane requires two moles of oxygen for each mole of carbon dioxide produced, and on the other end of the scale, burning carbon requires one mole of oxygen for each mole of carbon dioxide produced. Fuel oils require oxygen in the range of 1.5 moles per mole of carbon dioxide produced. With knowledge of this range of oxygen required for combustion and the flow rate of carbon dioxide in the exhaust, a range of the molar volume of air required for combustion can be determined. The narrower the range of possible chemical composition of the fuel and combustibles, the narrower the range of stoichiometric air required for combustion.

Knowledge of a minimum and maximum amount of air required for combustion and the amount of excess air present enables a minimum and maximum percentage of excess air to be calculated. Comparison of the minimum and maximum percentages to the allowable amount of excess air can serve as a ballpark estimate of whether a formal excess air correction is necessary.

APPENDIX J

VOC SAMPLING REFERENCES AND METHODS

VOC Sampling References

Reference is made in this section to some EPA documents describing specific hydrocarbon sampling methods. Suggested sources for EPA documents are:

U.S. Department of Commerce
National Technical Information Service
5285 Port Royal Road
Springfield, Virginia 22161
(703)487-4650

U.S. Environmental Protection Agency
Office of Air and Waste Management
Office of Air Quality Planning and Standards
Research Triangle Park, North Carolina 27711

EPA Library Service (MD-35)
U.S. Environmental Protection Agency
Research Triangle Park, North Carolina 27711
(919)541-2777 FTS: 629-2777

EPA-450/2-77-008 Appendix A
Determination of Volatile Content of Paint, Varnish or Related Products

EPA-450/2-77-026 Appendix A
Emission Test Procedure for Tank Truck Gasoline Loading Terminals

EPA-450/2-78-051 Appendix A-C
Pressure-Vacuum Test Procedures for Leak Tightness of Truck Tanks
Gasoline Vapor Leak Detection Procedure by Combustible Gas Detector
Leak Detection Procedure for Bottom-Loaded Truck Tanks by Bag Capture Method

ANSI Paper
"Standard Method of Test for Dilution of Gasoline Crankcase Oils"
(testing procedure for compliance with rules on dry cleaning filters and stills)

EPA-450/2-78-036 Appendix B
Detection of VOC Leaks from Petroleum Refining Equipment

EPA-450/2-78-041 Attachment 1, 2, 3
Reference Method for Determination of Total Gaseous Nonmethane Organic Emissions as Carbon -- Automated Analyzer Version
Determination of Total Gaseous Non-Methane Organic Emissions as Carbon: Manual Sampling and Analysis Procedure
Alternate Test Method for Direct Measurement of Total Gaseous Organic Compounds Using a Flame Ionization Analyzer

VOC Sampling Methods

THIS SECTION IS IN PREPARATION AND UPON COMPLETION WILL BE ISSUED TO ALL SPM RECIPIENTS OF RECORD. ALTERNATIVE VOC METHODS SHOULD BE SUBMITTED TO THE TACB FOR REVIEW AND APPROVAL ON A CASE-BY-CASE BASIS PRIOR TO USE (SEE CHAPTER 1, SAMPLING OVERVIEW).

APPENDIX K

RESERVED

APPENDIX L

F FACTORS

General

When emission limits are expressed in units of pounds per million BTU or equivalent units, considerable sampling and analysis effort may be saved with the use of F factors. An F factor represents the ratio of the volume of combustion products generated by combustion to the calorific value of the fuel combusted. The use of F factors may be preferred in some instances to avoid the difficulty and possible errors associated with measurement of heat input rate.

Sampling and monitoring results expressed in units of concentration may be converted to units of pounds per million BTU (or equivalent) by use of F factors. Each fuel has unique F factors which may be obtained from the table in this appendix or may be calculated from analysis of the particular fuel as discussed in the section entitled Calculation of F Factors.

If alteration of the flue gas occurs between combustion and the measurement of emissions, the applicability of F factors may be affected. Any such possibility must be considered and is briefly discussed in the section entitled Special Considerations.

Use of F Factors

Sampling results measured in units of pounds per hour or pounds per dry standard cubic foot must be converted to pounds per million BTU heat input when the applicable allowable emission rate is expressed in such units. This conversion normally necessitates measurement of the stack gas flow rate, the fuel input rate, and the fuel calorific value. The need for measurement of these three items may be avoided with knowledge of the fuel F factors, resulting in a considerable savings of sampling time and effort. An F factor is a measure of the flue gas volume generated by combustion of a particular fuel per million BTU heat input and is applied to sampling results measured in units of concentration as follows:

$$E = CF_d \left(\frac{20.9}{20.9-\%O_2}\right) \qquad \text{OR} \qquad E = CF_c \left(\frac{100}{\%CO_2}\right)$$

where: E = emission rate ($lb/10^6$ BTU)
C = pollutant concentration (lb/dscf)
F_d, F_c = F factor ($ft^3/10^6$ BTU)
$\%O_2$, $\%CO_2$ = volume percent of O_2, CO_2 in stack gas

The first equation uses the dry F factor (F_d) to convert the pollutant concentration (C) measured on a dry standard basis to units of pounds per million BTU. The term (20.9) ÷ (20.9 - $\%O_2$) removes the oxygen in excess of stoichiometric and its associated nitrogen from the stack gas since excess air is not a product of combustion, but the nitrogen associated with the combustion oxygen remains part of the stack gas and affects the pollutant concentration (C).

The second equation uses a factor (F_c) based on the amount of CO_2 generated by combustion to convert the pollutant concentration in the stack gas (lb/ft^3) to units of pounds per million BTU. The term (100) ÷ ($\%CO_2$) is used to convert the pollutant concentration to pounds of pollutant per cubic foot of CO_2, since F_c has units of cubic feet of CO_2 per million BTU. The measurement of pollutant concentration may be made on either a wet or dry basis but must be consistent with the basis for $\%\ CO_2$. If the pollutant concentration is measured on a dry basis, the $\%\ CO_2$ must be measured on a dry basis.

Special Considerations

The applicability of one or more types of F factors may be affected by occurrences such as incomplete combustion or alteration of the flue gas between combustion and measurement of emissions. It may be possible to quantitate such effects from knowledge of any alterations, but no such quantitation will be discussed here. Some possible occurrences affecting F factor applicability are discussed in the following paragraphs.

The derivation of all F factor methods is based on complete combustion of the fuel. If the flue gas contains products of incomplete combustion such as carbon monoxide, the flue gas volume and carbon dioxide volume per pound of fuel combusted will differ from the values used in the derivation of the F factors. Adjustments to the F factor are possible to minimize the error caused by incomplete combustion.

Unburned combustible matter in the ash will cause the volume of flue gas and the volume of carbon dioxide to differ from the calculated F factor values if the heat input is considered to be the fuel input rate multiplied by its calorific value. Many allowable emission rates are expressed in terms of BTU heat input, and if heat input is considered to be the calorific value derived from the combusted matter, the F factor methods are only slightly affected. That is, if any portion of the fuel goes through the combustion process unburned, the F factor methods will not include the calorific value of the uncombusted matter as heat input.

Alteration of the flue gas may occur with the use of wet scrubbers. A portion of the carbon dioxide in a flue gas may be absorbed by the scrubbing solution. Loss of carbon dioxide from the flue gas will affect the F_c factor to a greater extent than the F_d factor.

If the scrubbing solution in a scrubber is a lime or limestone slurry, the absorption of carbon dioxide may be minimized while other flue gas components such as sulfur dioxide are absorbed. The F_c factor should be applicable in such cases, but carbon dioxide may be added to the flue gas by reaction of sulfur dioxide with limestone.

As stated earlier, no attempt has been made to discuss quantitation of the effects of these various occurrences on F factors. If such effects exist and can be quantitated, F factors can be used at least as a comparison to the accuracy of other methods.

Values of F Factors

Anthracite Coal
F_d = 10,140 dscf/10^6 BTU = 2.723×10^{-7} dscm/J
F_c = 1980 scf CO_2/10^6 BTU = 0.532×10^{-7} scm CO_2/J

Subbituminous and Bituminous Coal
F_d = 9820 dscf/10^6 BTU = 2.637×10^{-7} dscm/J
F_c = 1810 scf CO_2/10^6 BTU = 0.486×10^{-7} scm CO_2/J

Liquid Fossil Fuels
F_d = 9220 dscf/10^6 BTU = 2.476×10^{-7} dscm/J
F_c = 1430 scf CO_2/10^6 BTU = 0.384×10^{-7} scm CO_2/J

Gaseous Fossil Fuels
F_d = 8740 dscf/10^6 BTU = 2.347×10^{-7} dscm/J
Natural Gas
F_c = 1040 scf CO_2/10^6 BTU = 0.279×10^{-7} scm CO_2/J
Propane
F_c = 1200 scf CO_2/10^6 BTU = 0.322×10^{-7} scm CO_2/J
Butane
F_c = 1260 scf CO_2/10^6 BTU = 0.338×10^{-7} scm CO_2/J

Bark
F_d = 9640 dscf/10^6 BTU = 2.589×10^{-7} dscm/J
F_c = 1860 scf CO_2/10^6 BTU = 0.500×10^{-7} scm CO_2/J

Wood Residue Other than Bark
F_d = 9280 dscf/10^6 BTU = 2.492×10^{-7} dscm/J
F_c = 1840 scf CO_2/10^6 BTU = 0.494×10^{-7} scm CO_2/J

Lignite Coal
F_d = 9900 dscf/10^6 BTU = 2.659×10^{-7} dscm/J
F_c = 1920 scf CO_2/10^6 BTU = 0.516×10^{-7} scm CO_2/J

Calculation of F Factors

In lieu of the values from the previous section, F factors may be calculated from ultimate analysis of the fuel on a dry basis to obtain the F_d and F_c factors.

$$F_d = \frac{3.64(\%H) + 1.53(\%C) + 0.57(\%S) + 0.14(\%N) - 0.46(\%O)}{10^{-6}\ (GCV)}$$

$$F_d' = \frac{227.2(\%H) + 95.5(\%C) + 35.6(\%S) + 8.7(\%N) - 28.7(\%O)}{10^{-6}\ (GCV')}$$

$$F_c = \frac{20.0(\%C)}{10^{-6}(GCV)}$$

$$F_c' = \frac{321(\%C)}{10^{-3}(GCV')}$$

where %H, %C, %S, %N, and %O are percent by weight of hydrogen, carbon, sulfur, nitrogen, and oxygen, respectively in the fuel and GCV is the gross calorific value (higher heating value) of the fuel in BTU/lb for English units and J/g for metric units (prime marks).

APPENDIX M

SAMPLING FLUID CATALYTIC CRACKING UNITS FOR PARTICULATE MATTER

General

Special considerations are necessary for sampling fluid catalytic cracking units (FCCU) stacks. Modified procedures for sampling, analysis, and/or reporting will be necessary depending on the applicable emission rate standard. Analysis procedures are discussed in this appendix only to the extent necessary to define necessary modifications to normal sampling and/or analysis procedures; detailed analytical procedures are described in the laboratory manual.

Standards applying to FCCU particulate matter emissions are contained in TACB Regulation I, New Source Performance Standards (NSPS), and/or TACB Permits. All of these requirements will often be applicable to FCCU particulate matter emissions, sometimes only TACB Regulation I and a TACB Permit are applicable, but TACB Regulation I is always applicable.

Applicable Regulations

TACB Regulation I and TACB Permits

For regulations which consider total release of air contaminants (e.g., TACB Regulation I and TACB permits), the portion of the sample caught in the impinger section (particulate matter and condensibles) must be included in emission rate calculations (see Chapter 1, Sampling Overview). Particulate matter emission rate calculations for FCCUs must include particulate matter collected in the probe, cyclone, filter, and first impinger. Sulfuric acid mist captured in the sampling train and sulfur trioxide captured in the first impinger calculated as sulfuric acid will be included in particulate matter determination.

New Source performance Standards (NSPS)

The Federal NSPS for FCCUs does not consider condensible matter caught in the impinger section of the sampling train as particulate matter. Furthermore, the intent of NSPS for FCCUs excludes sulfate particulate matter which is generated from ammonia and sulfuric acid present in the stack. The NSPS particulate matter allowable emission rate is directed toward catalyst fines or mineral particulate matter only. Only mineral particulate matter collected in the probe, cyclone, and on the filter is used to quantify particulate matter emissions to which the NSPS standard is applicable.

Other Regulations or Standards

The above references are not meant to imply that these are the only types of regulations that are applicable to FCCUs. Special cases of the above applications may occur and will be handled on a case-by-case basis.

Sampling

Standard isokinetic sampling procedures using the particulate matter-SO_3-SO_2 sampling train (see Chapter 5) are followed. The probe and cyclone wash, filter, and first impinger contents should be stored in separate containers so the analysis can determine the amounts of particulate matter, sulfates, etc. captured in each component of the sampling train.

Analysis

Particulate matter analysis is normally done by first determining the total amount of particulate matter including ammonium sulfate, ammonia, and sulfuric acid in each component of the sampling train. The amount of ammonium sulfate generated in the stack and the amount generated in the analysis is then determined separately from the amounts of ammonia and sulfuric acid that were present in the stack.

Separate amounts of particulate matter, ammonium sulfate, ammonia, and sulfuric acid in the stack emissions that were captured in each component of the sampling train should then be determined. Details of the required analytical procedures are described in the laboratory manual.