TEXAS COMMISSION ON ENVIRONMENTAL QUALITY
NORTH CONCHO RIVER
CONTINUOUS WATER QUALITY MONITORING
PROJECT PLAN

A1 APPROVAL PAGE

Texas Commission on Environmental Quality, Central Office

Charles Dvorsky — Date: 8/13/07
CWQMN Network Coordinator, TCEQ

Patrick Roques — Date: 8/13/07
Section Manager, TCEQ WQM&A Program

Brenda Archer — Date: 8/13/07
Team Leader, TCEQ SWQM Program

Robin Cypher — Date: 08/13/07
Project Lead, TCEQ SWQM Program

Edward Ragsdale — Date: 8/13/07
CWQMN Quality Control Officer, TCEQ SWQM Program

Sharon Coleman — Date: 9/20/2007 (rec'd last signature)
CWQMN Quality Assurance Officer

David Manis — Date: 8/28/07
Section Manager, TCEQ Data Management and Quality Assurance Section

A1 APPROVAL PAGE

Texas Commission on Environmental Quality, Region 8 Office

Mark Newman

Mark Newman
Manager Water Program, Region 8

8/13/07
Date

A1 APPROVAL PAGE

Upper Colorado River Authority

Fred Teagarden
Fred Teagarden
Senior Hydrologist, Upper Colorado River Authority

8-13-07
Date

A1 APPROVAL PAGE

City of San Angelo

Harold Dominguez
City Manager, City of San Angelo

9/19/07
Date

The North Concho River Continuous Water Quality Monitoring Network (CWQMN) Project Plan documents project specific details for new continuous water quality projects. Critical project specific details for new CWQMN stations are not covered in the CWQMN Quality Assurance Project Plan (QAPP). Please see the CWQMN QAPP for other network details.

A2 TABLE OF CONTENTS

A1 Approval Page
A2 Table of Contents
A3 Distribution List
A3 List of Acronyms
A4 Project/Task Organization
A5 Problem Definition/Background
A6 Project/Task Description
A7 Quality Objectives and Criteria
A8 Special Training/Certification
A9 Documents and Records
B1 Sampling Process Design
B2 Sampling Methods
B3 Sample Handling and Custody
B4 Analytical Methods
B5 Quality Control
B6 Instrument/Equipment Testing, Inspection, and Maintenance
B7 Instrument Calibration and Frequency
B8 Inspection/Acceptance of Supplies and Consumables
B9 Non-Direct Measurements
B10 Data Management
C1 Assessment and Response Actions
C2 Reports to Management
D1 Data Review, Verification and Validation
D2 Verification and Validation Methods
D3 Reconciliation with User Requirements

Tables:

Table A7.1 – Greenspan CS4-1200 Sonde (Multi-Probe) Data Quality Objectives
Table A7.2 - In-Situ TROLL 500 Performance Specifications
Table A7.3 – Met One Instruments 8” Rain/Snow Guage, Model 375C Performance Specifications

Figures:

Figure 1: North Concho Watershed and Downtown Sub-watershed
Figure 2: Map of Monitoring Locations
Figure 3: Planned Site Setup for North Concho River at South Oakes Street Bridge
Figure 4: Planned Site Setup for North Concho River at Pedestrian Bridge

Appendices:

Appendix A	Standard Operating Procedure for Met One Instruments 8” Rain/Snow Gauge, Model 375C Operation and Maintenance
Appendix B	Standard Operating Procedure for Validation of Continuous Water Quality Monitoring Data Collected by Multiparameter Sonde

LIST OF ACRONYMS

BMP	**Best Management Practices**
CAMS	**Continuous Ambient Monitoring Station**
CFS	**Cubic Feet per Second**
CWQMN	**Continuous Water Quality Monitoring Network**
CoSA	**City of San Angelo**
DM&QA	**Data Management and Quality Assurance**
EPA	**Environmental Protection Agency**
FOD	**Field Operation Division**
Ft.	**Feet**
FY	**Fiscal Year**
LEADS	**Leading Environmental Analysis and Display System**
MDL	**Method Detection Limit**
mg/L	**Milligram per Liter**
MOPS	**TCEQ Monitoring Operations Division**
NA	**Not Applicable**
NPS	**Non-point Source**
QA	**Quality Assurance**
QAO	**Quality Assurance Officer**
QAPP	**Quality Assurance Project Plan**
QC	**Quality Control**
RPD	**Relative Percent Difference**
RPE	**Relative Percent Error**
SOP	**Standard Operating Procedure**
SWQM	**Surface Water Quality Monitoring Team**
TCEQ	**Texas Commission on Environmental Quality**
UCRA	**Upper Colorado River Authority**
µS/cm	**micro Siemens per centimeter**
WQM&A	**Water Quality Monitoring & Assessment Section**
ºC	**Degrees Centigrade**

A3 DISTRIBUTION LIST

CITY OF SAN ANGELO
72 W. College Avenue
San Angelo, TX 76903

Mr. Harold Dominguez, City Manager, City of San Angelo
Ms. Mindy Ward, City Attorney, City of San Angelo
Mr. Carl White, Parks and Recreation Service Area Director, City of San Angelo

UPPER COLORADO RIVER AUTHORITY
512 Orient
San Angelo, TX 76903

Mr. Fred Teagarden, UCRA, Senior Hydrologist
Mr. Chuck Brown, UCRA, Staff Hydrologist

TEXAS COMMISSION ON ENVIRONMENTAL QUALITY,
REGION 8, SAN ANGELO
622 S. Oakes, Ste. K
San Angelo, TX 76903-7035

Mark Newman, Section Manager
Boyd Guthrie, Surface Water Quality Monitoring

TEXAS COMMISSION ON ENVIRONMENTAL QUALITY CENTRAL OFFICE
P.O. Box 13087
Austin, TX 78711-3087

Mr. Patrick Roques, Section Manager, Water Quality Monitoring & Assessment Section, Monitoring Operations Division
Ms. Brenda Archer, Surface Water Quality Monitoring Team Leader, Monitoring Operations Division
Mr. Edward Ragsdale, Surface Water Quality Monitoring Team, Water Quality Monitoring & Assessment Section
Ms. Robin Cypher, Surface Water Quality Monitoring Team, Water Quality Monitoring & Assessment Section
Mr. Scott Mgebroff, Section Manager, Ambient Monitoring Section, Monitoring Operations Division
Mr. Charles Dvorsky, Network Coordinator, Ambient Monitoring Section, Monitoring Operations Division
Mr. Larry Lehmann, Systems Planning and Implementation Team, Ambient Monitoring Section, Monitoring Operations Division
Mr. Lynn Robbins, Systems Planning and Implementation Team, Ambient Monitoring Section, Monitoring Operations Division
Mr. Terry Grona, Systems Planning and Implementation Team, Ambient Monitoring Section, Monitoring Operations Division

Mr. Keith Talley, Systems Planning and Implementation Team, Ambient Monitoring Section, Monitoring Operations Division
Mr. Robert Hernandez, Systems Planning and Implementation Team, Ambient Monitoring Section, Monitoring Operations Division
Mr. David Manis, Section Manager, Data Management & Quality Assurance Section, Monitoring Operations Division
Ms. Elizabeth Fawcett, Data Management Technology Team, Data Management & Quality Assurance Section, Monitoring Operations Division
Ms. Sharon Coleman, CWQMN Quality Assurance Officer, Compliance Support Division
Ms. Laurie Curra, Watershed Management Team Leader, Water Quality Monitoring & Assessment Section
Ms. Carol Whittington, Watershed Management Team, Water Quality Monitoring & Assessment Section
Ms. Anne Panko, Quality Assurance & Audit Team, Data Management & Quality Assurance Section, Monitoring Operations Division
Ms. Gail Rothe, Categorical 106 Grant Project Manager

A4 PROJECT/TASK ORGANIZATION

This section is intended to identify individuals and organizations that will be responsible for developing and/or supporting this project. For a list of additional project/task and responsibilities please refer to section A4 of the CWQMN QAPP.

A4.1 TCEQ CWQMN Network Coordinator (Charles Dvorsky)

- Provides overall support for coordination, development, and installation of new Continuous Ambient Monitoring Station (CAMS)

A4.2 TCEQ SWQM Project Lead (Robin Cypher)

- Develop Project Plan
- Responsible for coordination of the overall project
- Plan and participate in site reconnaissance; coordinate with appropriate internal and external parties to accomplish objectives of site visits
- Participate in deployment of station as appropriate

A4.3 TCEQ Systems Planning and Implementation Team (Larry Lehmann)

- Provides overall support and logistics for deployment of monitoring stations
- Provides training to operate and maintain station infrastructure

A4.4 TCEQ Region 8 (Boyd Guthrie)

- Site Operation and Maintenance
- Participate in station development

A4.5 TCEQ Data Validation (Elizabeth Fawcett)

- Provides data validation for two field parameter sites
- Train operators on data validation software and procedures when applicable including Manual Validation
- Provide training for Site Operator on the data display system
- Contacts Site Operator and Project Lead to when potential data issues arise

A4.6 Upper Colorado River Authority (Chuck Brown)

- Provide critical updates on non-point source control structure installations
- Participates in coordination of activities with stakeholders

A4.7 City of San Angelo (Carl White)

- Participate in site reconnaissance; coordinate with appropriate internal and external parties to accomplish objectives of site visits

A5 PROBLEM DEFINITION/BACKGROUND

The north fork of the Concho River (Segment 1421) below O.C. Fisher Lake is located entirely within the city limits of San Angelo, TX. From the outlet works of San Angelo Dam on O.C. Fisher Lake, it flows through various residential, recreational, industrial, and commercial use areas until it confluences with the South Concho River arm near the Bell Street dam on the eastern side of San Angelo.

Since the completion of O.C. Fisher Lake in the early 1950's, flow below the reservoir has been greatly reduced. Years of drought coupled with an increase of brush in the watershed have kept the reservoir at levels that preclude substantial downstream releases to the North Concho. Because stream flow below the dam is generally limited to dam seepage and spring flows, stormwater runoff exerts significant influence on water quality. Historically, this water body has been plagued by numerous algae blooms and fish kills which have been linked to non-point source pollutants entering the river during storm events.

In 1994, the Environmental Protection Agency (EPA) awarded a grant to the Upper Colorado River Authority (UCRA) to conduct a non-point source (NPS)/urban runoff abatement study in the North Concho watershed. As a result of the study UCRA, in cooperation with a citizen advisory group and the City of San Angelo (CoSA) constructed several Best Management Practice (BMP) structures in an effort to reduce the amount of pollutants entering the river as a result of urban runoff. Public outreach and public education have been key components in the overall NPS abatement program. Over the last five years, extensive periodic fish kills have ceased.

The Downtown NPS Project currently underway will capture stormwater runoff from the approximately 1260 acres that comprise the downtown sub-watershed (See Figure1). Almost half the landuse in this area is equal parts residential and industrial use with a significant park and recreation system along and adjacent to the river. The Irving Street phase of the project will capture a portion of the urban runoff from this area and remove pollutants utilizing a gravity separation device and retentive filtration system (Aqua Swirl). This system utilizes state of the art technology and is unlike any other BMP constructed in the San Angelo NPS program. High quality effluent from the system will be discharged into the North Concho River or pumped into nearby "living laboratory" demonstration ponds as a part of the expanded public education effort. Future plans for stormwater abatement in the Irving Street area include the installation of large-scale French drains to slow and filter stormwater before it enters the river.

This CWQM project will provide data to UCRA for evaluating the effectiveness of BMPs at reducing the impact of stormwater runoff to the North Concho River. Multi-parameter water quality sondes will be installed above and below the Irving Street phase BMPs to monitor potential differences in temperature, dissolved oxygen, pH, and specific conductance between the two areas. Water level sensors and a precipitation monitor will also be installed to correlate sonde data with rain events.

The CWQM data will also provide UCRA with a mechanism to assist with mitigating fish kills on the North Concho River during periods of normal and/or low flow. By monitoring diurnal dissolved oxygen and pH levels, UCRA may request downstream releases from O.C. Fisher Lake when water quality conditions indicate the potential for a fish kill.

Figure 1: North Concho Watershed and Downtown Sub-watershed

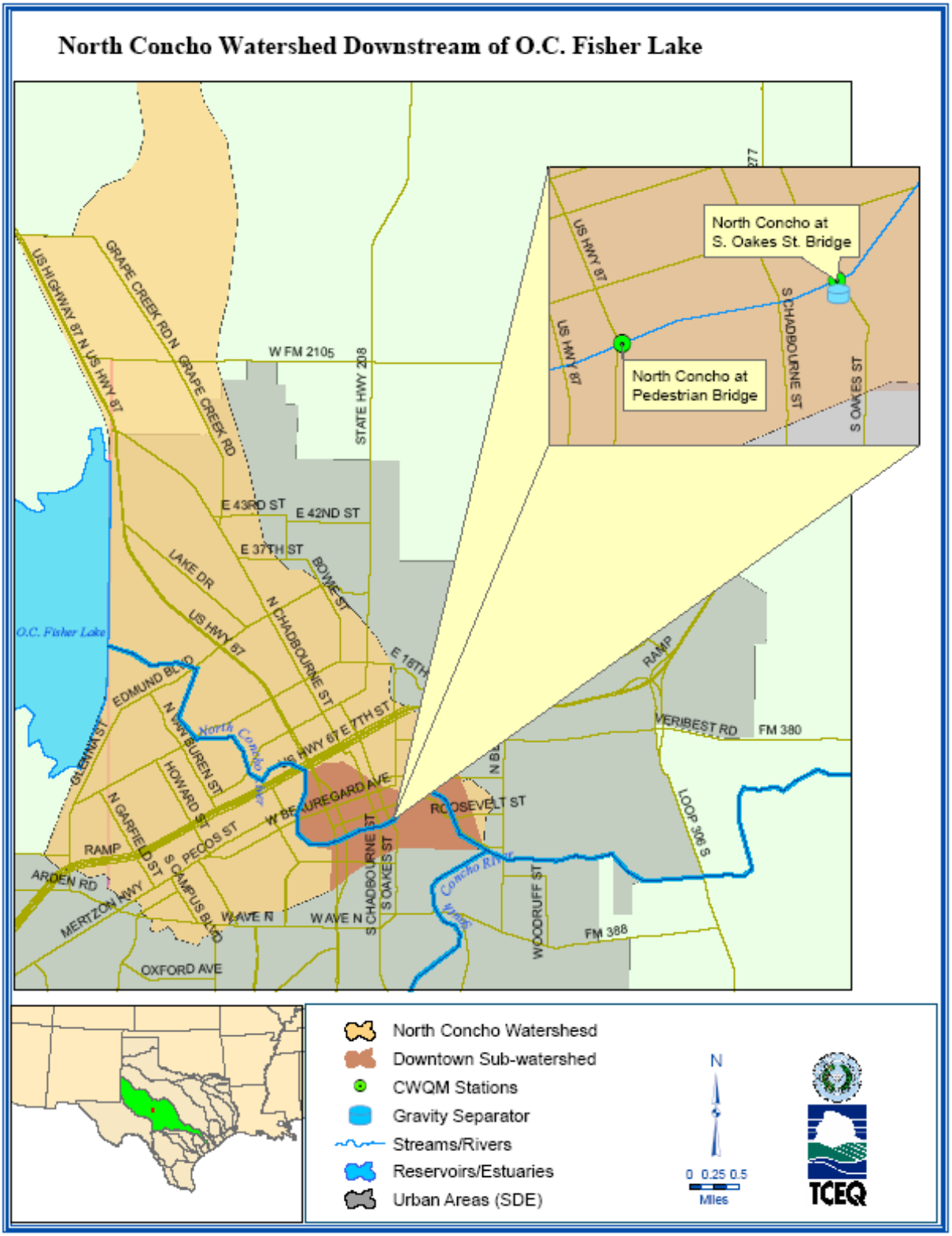

A secondary objective of this project is to provide water quality data near real time as a public education/outreach tool. At the time of this writing, the data will be available on the TCEQ website: http://www.tceq.state.tx.us/compliance/monitoring/water/quality/data/wqm/swqm_realtime_swf.html. Future plan development by UCRA and CoSA may allow for data to be displayed real time at a local kiosk-type display.

In-situ water quality monitoring will begin September 2007. Water quality measurements will be logged every 15 minutes during all months and environmental conditions for a period of at least 2 years.

A6 PROJECT/TASK DESCRIPTION

With the cooperation of CoSA and UCRA, TCEQ will establish two continuous water quality monitoring (CWQM) sites on the North Concho River in San Angelo, Texas. A downstream station will be located immediately below the discharge of the Irving Street Phase BMP structures near the South Oakes Street bridge. A second upstream station acting as a control site (outside the zone of effect of the downtown BMPs) will be located at the pedestrian bridge near South Koenigheim Street.

Monitoring equipment for both sites will include In-situ water levels and Greenspan multi-parameter water quality sondes. A precipitation monitor (tipping bucket) to measure rainfall in the immediate sub-watershed will be installed at the most downstream site.

Site installation is expected to be completed September 2007 with in-situ water quality sampling beginning immediately upon installation and continuing for a period of at least (but not limited to) 2 years. All water quality, water level, and precipitation data will be transmitted and stored in the Leading Environmental Analysis and Display System (LEADS) database. All data will be available to the public via the internet.

A7 QUALITY OBJECTIVES AND CRITERIA

The measurement performance specifications to support the project objectives are specified in Table*(s) A7.1 – A7.3.*

Methods for the Greenspan CS4-1200 are based on *Standard Methods for the Examination of Water and Wastewater*, 20th Edition, 1998 unless otherwise noted.

Table A7.1 – Greenspan CS4-1200 Sonde (Multi-Probe) Data Quality Objectives

Parameter	Parameter Code	Units	Method	Calibration Verification Sample (CVS) **
pH	00400	pH / units	Glass electrode, Standard Method 4500-H+B	±0.50 pH unit
Dissolved Oxygen	00300	mg/L	Galvanic membrane electrode, Standard Method 4500-O-G	±0.50 mg/L

Parameter	Parameter Code	Units	Method	Calibration Verification Sample (CVS) **
Specific Conductance	00094	µS/cm	Toroidal*	≤5.0% RPE
Temperature	00010	°C	Standard Method 2550 B	NA

*Method not based on *Standard Methods for the Examination of Water and Wastewater*, 20th Edition, 1998
** CVS criteria for use in the 305(b) and 303(d) Lists per SWQM DQOs.
NA = Not Applicable

Table A7.2 - In-Situ TROLL 500 Performance Specifications*

Range	Accuracy	Resolution
0 -11 meters	0.05 % Full Scale (-5 to 50 ºC)	0.005 % Full Scale

*Specifications from TROLL 500 Operation Manual

Table A7.3 – Met One Instruments 8" Rain/Snow Gauge, Model 375C Performance Specifications*

Funnel Diameter	Accuracy	Resolution
8 in. (20.3cm)	+/- 0.5% at 0.5in/ hour	0.01 inch rain per switch closure

*Specifications from Met One Instruments, Model 375C Operation Manual

Ambient Water Reporting Limits (AWRLs)

NA

Precision

NA.

Bias

As described in Section A7.1 of the CWQMN QAPP.

Representativeness

As described in Section A7.2 of the CWQMN QAPP.

Comparability

As described in Section A7.3 of the CWQMN QAPP.

Completeness

A general requirement of 75 percent data completeness goal has been set for the CWQM network. Periods of no flow or other conditions that necessitate the shutdown of any or all instrumentation during these times are not considered in the calculation for data completeness. See Section A7.5 CWQM QAPP.

A8 SPECIAL TRAINING/CERTIFICATION

TCEQ Region 8 staff will be the lead for site operation and maintenance for both CWQM stations. Region staff received initial training for sonde setup and calibration of the Greenspan CS4-1200 multi-parameter sonde in November of 2006 by SWQM Central Office (SWQM CO) staff and a Greenspan Representative. A follow-up training including the sonde, In-situ level, and precipitation monitor will be conducted by SWQM CO staff upon instrument installation at the stations.

Region 8 staff completed LEADS Data Management training in February 2007. Since that training, LEADS has been subject to a redesign/upgrade. Region 8 staff will have the opportunity to attend a second LEADS Data Management training on the updated system if necessary.

A9 DOCUMENTS AND RECORDS

As described in sections A9 of the CWQMN QAPP.

B1 SAMPLING PROCESS DESIGN

Site Selection Criteria

Site selection is based on geographic location within the downtown sub-watershed, proximity to the BMP discharge point, and landowner access. The upstream station will monitor water quality entering the Irving Street area. The downstream station will monitor for potential effects the Irving Street area BMP structures contribute to the North Concho as a part of the Downtown NPS Program. See Figure 2.

Monitoring Station Design

<u>Downstream Station</u>:

<u>Monitoring and Support Equipment</u>

North Concho River at South Oakes Street bridge (Station ID 15889, CAMS 0744)
Located on the right bank of the North Concho River between South Oakes Street bridge and Celebration Bridge. Water quality monitoring and meteorological equipment at this site will include:

- One In-Situ TROLL 500 Level Sensor, communications cables and support structure
- Two Greenspan CS4-1200 multi-parameter water quality sondes with communication cables and support structure
- Zeno data logger.
- Met One Instruments, 8” Rain/Snow Gauge, Model 375C

Figure 2: Map of Monitoring Locations

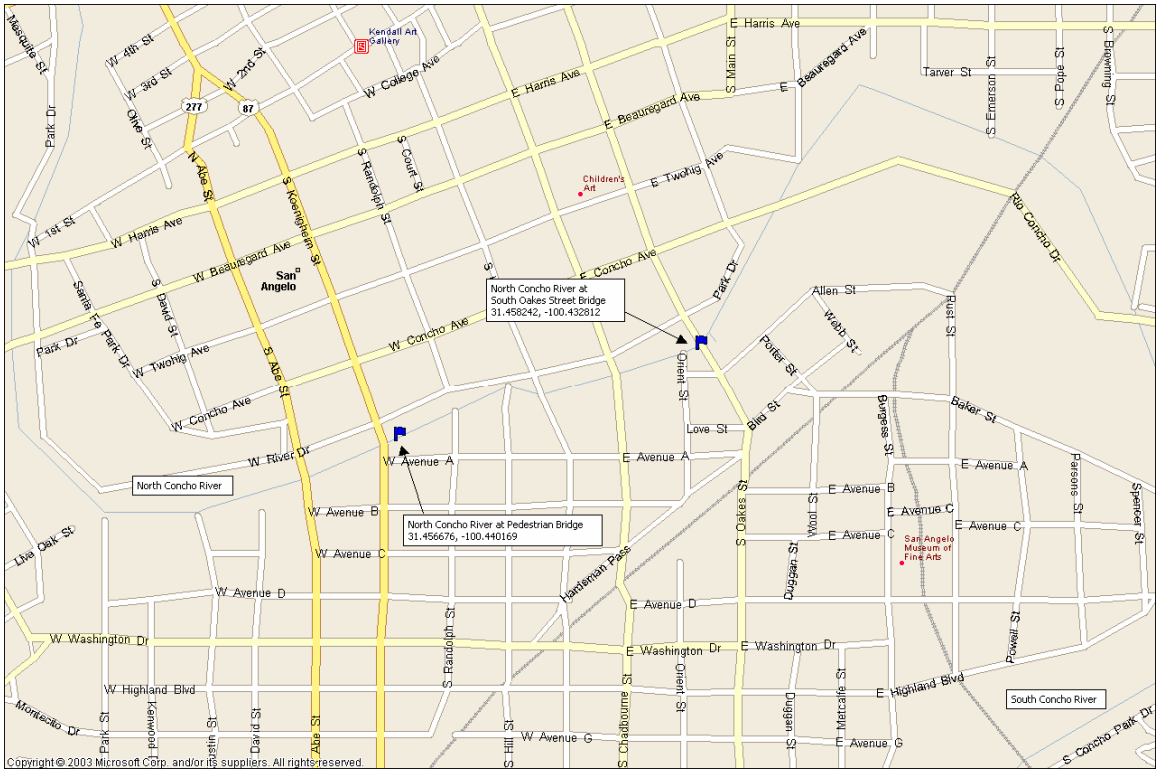

Monitoring Equipment Configurations and Measurement Frequencies

The Greenspan multi-parameter sonde will monitor water temperature, dissolved oxygen, pH, and specific conductance. The In-Situ level sensor will monitor water level. Water quality measurements and water level will be logged once every 15-minutes by the data logger.

Precipitation will be measured on an hourly basis and reported as inches per hour.

Site Development

The sonde will be housed in a length of 4 in. diameter pvc pipe installed on the river bank. The lower 3 feet of pipe will perforated to allow water flow across the sensors. The pipe will be secured to the bank and the river bed with extruded aluminum channel. The water level sensor will be secured to the aluminum channel.

Approximately 60 ft. up the bank from the sonde installation, a traffic box containing a Zeno data logger and telemetry equipment will be mounted on a pole secured by anchor bolts, and installed adjacent to a CoSA distribution panel. CoSA will supply power to the traffic box from the distribution panel. The tipping bucket will be secured to the pole. Conduit containing power and data cables connecting the sonde to the traffic box will be buried in a shallow trench (<1.0 ft.) See Figure 3.

Upstream Station:

Monitoring and Support Equipment

North Concho River at pedestrian bridge (Station ID 20105, CAMS 0743)
Located on the right bank of the North Concho River downstream of South Koenigheim Street at the pedestrian bridge. Water quality monitoring equipment at this site will include:

- One In-Situ TROLL 500 Level Sensor, communications cables and support structure
- Two Greenspan CS4-1200 multi-parameter water quality sondes with communication cables and support structure
- Zeno data logger.

Monitoring Equipment Configurations and Measurement Frequencies

The Greenspan multi-parameter sonde will monitor water temperature, dissolved oxygen, pH, and specific conductance. The In-Situ level sensor will monitor water level. Water quality measurements and water level will be logged once every 15-minutes by the data logger.

Site Development

The sonde will be housed in a length of 4 in. diameter pvc pipe installed on the river bank. The lower 3 feet of pipe will perforated to allow water flow across the sensors. The pipe will be secured to the bank and the river bed with extruded aluminum channel. The water level sensor will be secured to the aluminum channel.

A traffic box containing a Zeno data logger and telemetry equipment will be mounted underneath the pedestrian bridge with clamp-type mounting brackets. Conduit with power and data cables connecting the sonde to traffic box will be buried in a shallow trench (<1.0 ft.). CoSA will provide power and access to a junction box mounted to a telephone pole approximately 60 ft. southeast of the pedestrian bridge. A power cable will be run through conduit and buried in a shallow trench (<1.0 ft.) from the traffic box to the junction box. See Figure 4.

CoSA will supply power to the traffic box from the junction box.

B2 SAMPLING METHODS

In-situ water quality and water level measurements are logged once every 15-minutes by the data logger. The data are then transmitted to the MeteoStar/LEADS system in Austin, Texas where the data are ingested, archived, and posted to the appropriate TCEQ internet site.

Sampling/Measurement System Corrective Action

Corrective action measures in the CWQMN will be taken to ensure the Data Quality Objectives are attained. The site operator is responsible for monitoring the performance of the measurement and support equipment and identifying problems or potential problems. When problems are identified that can not be resolved by the site operator, the site operator notifies the project lead responsible for coordination with appropriate personnel to resolve the problem.

The site operator is responsible for documenting problems and corrective actions in the appropriate instrument logbook(s). When problems could affect data quality the site operator is also responsible for making entries in the MeteoStar/LEADS Operator Log to provide information to the data validators for data assessment purposes.

The project lead is responsible for coordinating the necessary supply and parts shipments to the site operator. When necessary, personnel from the Ambient Monitoring Team will travel to a particular site to repair or replace support equipment that can not be repaired or replaced by the site operators. Monitoring equipment that can not be repaired by TCEQ staff is sent to the manufacturer for repair.

Figure 3: Planned Site Setup for North Concho River at South Oakes Street Bridge

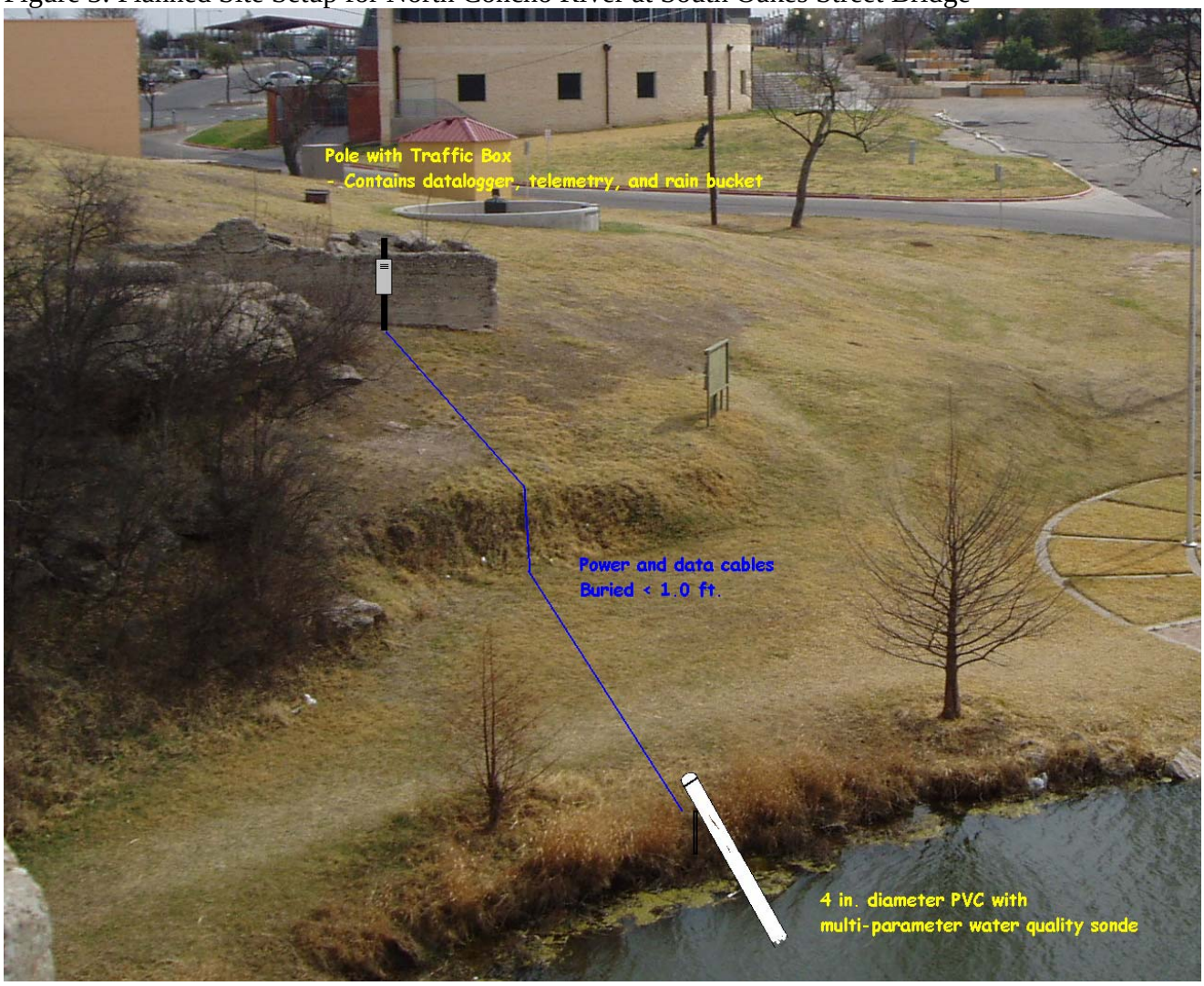

Figure 4: Planned Site Setup for North Concho River at Pedestrian Bridge

CWQMN sites in or near flood plains have the potential to be damaged by flood waters during severe floods. Potential flooding is a consideration in the site development process. In-situ components are secured to the stream banks and have proved capable of surviving a given flood. However, it is accepted that the support systems and components will need periodic replacement and repair.

B3 SAMPLING HANDLING AND CUSTODY

As described in Section B3 of the CWQMN QAPP.

B4 ANALYTICAL METHODS

Analytical methods are listed in Section A.7.

B5 QUALITY CONTROL

As described in Section B5 of the CWQMN QAPP.

Greenspan CS4-1200 Sonde

Please see Table A7.1 for QC criteria

Analytical SOPs are under development for sonde and water level sensor operation and quality control procedures.

Sonde DO, pH, and conductivity parameters are calibrated at a minimum once monthly. DO, SC, and pH Calibration Verification Samples (CVSs) are analyzed monthly.

Corrective Action Related to Quality Control

As described in Section B5 of the CWQMN QAPP.

B6 INSTRUMENT/EQUIPMENT TESTING, INSPECTION AND MAINTENANCE

Greenspan Sonde
Greenspan Sonde maintenance SOP is under development. TCEQ Austin Staff will provide sonde maintenance support.

Water Level Sensor
Please see In-Situ TROLL level sensor instruction manual.

Precipitation Monitor
Please see Field Operations Division SOP FOSTAT-009 Met One Instruments 8inch Rain/Snow Gauge, Model 375C Operation and Maintenance (Appendix A).

B7 INSTRUMENT CALIBRATION AND FREQUENCY

Greenspan Sonde
The site operator will calibrate sonde parameters once monthly at a minimum.

Water Level Sensor
Water level sensor calibration frequency will be performed per the In-Situ TROLL level sensor instruction manual.

Precipitation Monitor
Please see Field Operations Division SOP FOSTAT-009 Met One Instruments 8 inch Rain/Snow Gauge, Model 375C Operation and Maintenance (Appendix A).

B8 INSPECTION/ACCEPTANCE OF SUPPLIES AND CONSUMABLES

MOPs ambient monitoring section keeps an inventory of common spare parts. Parts can be mailed via United Parcels Service and will usually arrive the next day (if mailed before noon on the mailing day). The Project lead will be responsible for the coordination of parts replacement.

Greenspan Sonde
Common Greenspan sonde spare parts are stocked by MOPs.

The site operator will contact the Project lead to obtain pH calibration standards. Greenspan specific conductance is calibrated by a calibration loop that will be supplied with the unit.

Water level Sensor
Water level sensors and communication cables are stocked by MOPs.

Precipitation Monitor

Precipitation monitors and communication cables are stocked by MOPs

B9 NON-DIRECT MEASUREMENTS

There are no non-direct measurements used in this project.

B10 DATA MANAGEMENT

As described in CWQMN QAPP.

Data validation will be performed by TCEQ DM&QA staff as noted in section A4.4.

Project water temperature, pH, dissolved oxygen, specific conductance, water level, and precipitation data will be stored in TCEQ's Leading Environmental Analysis and Display System (LEADS).

C1 ASSESSMENTS AND RESPONSE ACTIONS

As described in CWQMN QAPP.

Corrective Action

As described in Section C1 of the CWQMN QAPP.

C2 REPORTS TO MANAGEMENT

As described in Section C2 of the CWQMN QAPP.

Reports to TCEQ Project Management

As described in Section C2 of the CWQMN QAPP.

D1 DATA REVIEW, VERIFICATION, AND VALIDATION

As described in Section D1 of the CWQMN QAPP.

Data validation will be conducted by Data Management Technology staff at TCEQ Central Office in Austin, Texas.

Sonde data validation is described in Section D1 of the CWQMN QAPP. Please see SOP DQRP-015, *Validation of Continuous Water Quality Monitoring Data Collected by Multi-parameter Sonde* (Appendix B).

D2 VERIFICATION AND VALIDATION METHODS

As described in Section D2 of the CWQMN QAPP.

D3 RECONCILIATION WITH USER REQUIREMENTS

As described in Section D3 of the CWQMN QAPP.

Appendix A

STANDARD OPERATING PROCEDURE

Met One Instruments 8" Rain/Snow Gauge, Model 375C Operation and Maintenance

Regional Office:		**Date:**	
FOD Central Office:		**Date:**	
Quality Assurance:		**Date:**	
Effective Date:			

1.0 PURPOSE

The 1990 Clean Air Act Amendments (CAAA) required the Environmental Protection Agency (EPA) to promulgate rules for the enhanced ambient air monitoring to obtain more comprehensive and representative data on ozone air pollution. The Texas Commission on Environmental Quality (TCEQ) was required to establish Photochemical Assessment Monitoring Stations (PAMS) as part of the State Implementation Plan (SIP) monitoring network. Precipitation is one of the target parameters that affect ozone concentrations. This document describes procedures for measuring precipitation using Met One Instruments 8" Rain/Snow Gauge, Model 375C.

2.0 SCOPE AND APPLICABILITY

Field Operations Division uses the Met One Instrument Rain/Snow Gauge to continuously measure precipitation throughout the state of Texas. The Model 375C Electric Heated Tipping Bucket Rain/Snow Gauge is an accurate, sensitive and low maintenance senor designed to measure rainfall on a continuous basis. The heated funnel will melt any frozen precipitation and measure that too. This document describes procedures for measuring precipitation using Met One Instruments 8" Rain/Snow Gauge, Model 375C. The unit has an 8 inch diameter orifice and is calibrated to 0.01 inch rain per switch closure. It has an accuracy of +/- 1% at 1 to 3 inches per hour at 70 degrees Fahrenheit

3.0 PERSONNEL QUALIFICATIONS AND TRAINING

Field Operators need to meet the qualifications for TCEQ Engineering Technicians or Engineering Specialists and complete all on-the-job training. The operator must have a working knowledge of Electronics, Physics, Mathematics and Chemistry. The operator must able to read and interpret schematics, equations and formulas. Also, the operator must be familiar with various hand tools and

electronic test equipment, like Digital Multi Meters. The operator must possess basic computer skills and be able to comprehend and use the various Leading Environmental Analysis and Display System (LEADS) web pages and programs, and should continue to improve knowledge and skills by reviewing the Training Material listing on the Daily Status Report (DSR) Web Pages.

4.0 DEFINITIONS

Electric Heated Tipping Bucket Rain/Snow Gauge - Measures rainfall continuous basis. Water does not collect in the sensor, but is drained each time a internal "tipping bucket" fills with 0.01 inch of rainfall. The heated funnel melts the snow/ice then measure the liquid water. The internal parts are also heated to protect them from freezing. The weight of the water will close a switch to complete a circuit, and a pulse is sent to the ZENO for counting. The sensor is calibrated prior to shipment and requires no field adjustments after installation.

Acronyms and Abbreviations

AIRS	Areometric Information Retrieval System
CAA	Clean Air Act
CAAA	Clean Air Act Amendment
CO	Carbon Monoxide
CAMS	Continuous Air Monitoring Station
C	Centigrade; Celsius
DSR	Daily Status Reports
EPA	U. S. Environmental Protection Agency
F	Fahrenheit
LEADS	Leading Environmental Analysis and Display System
LCC	Laboratory Control Checks
Meteostar	Meteo Star Data Management and Analysis
MONOPS	Monitoring Operations
MSDS	Material Safety Data Sheet
O3	Ozone
OTS	Ozone Transfer Standard
PAMS	Photochemical Assessment Monitoring Station
ppm	parts per million
ppmv	parts per million per volt
ppb	parts per billion
PMI	Preventative Maintenance Instruction
SIP	State Implementation Plan
SOP	Standard Operating Procedure
TCEQ	Texas Commission on Environmental Quality
TNRCC	Texas Natural Resource Conservation Commission

UV	Ultraviolet
VAC	Voltage of Alternating Current
VDC	Voltage of Direct Current
ZENO	Station operating computer

5.0 PROCEDURE

The initial set up is done by Monitoring Operations (MONOPS) personnel. The instrument will be installed outside a Continuous Air Monitoring Station (CAMS) but inside the security fence. The CAMS will be climate controlled and provide all the necessary requirements to insure that the instrument will function properly, see section 2.0. They will connect the instrument to the data acquisition system and the electrical power source. The field operator will be responsible for the operation and maintenance of the instrument.

Materials: A computer with access to the DSR web pages, access to the CAMS computer, phillips screwdriver, small paint brush and a bottle with some plain water

Personnel: Field Operator with the skills outlined in section 3.0.

5.1 DAILY OPERATIONS FROM THE OFFICE

Review data from DSR web pages (http://dsr.trncc.state.tx.us/) especially after a rain/snow event. Look for CAMS Hourly Averages By Site. Open this web page and fill in the date of the rain/snow event and site location of the rain gauge. The data is reported in inches of precipitation per hour. If data looks unreasonable, compare it with the local weather service. If the data looks questionable, see sections 5.3 and 5.4 below.

5.2 DAILY OPERATIONS FROM THE CAMS

Check rain/snow gauge and remove any debris from it. Check all connecting cables; make sure wiring is not damaged, repair if necessary. (See Section 6.0 for safety concerns)

5.3 PREVENTATIVE MAINTENANCE

Unplug the unit before working on it (see Section 6). Change the status code on the precipitation channel (channel 36) from K to P (ambient data to maintenance). Log on to the CAMS computer and from the main menu choose item G, type in "c36/p". Remove the cover by removing the two phillips screws from the base. Use the paint brush to clean the senor funnel and buckets every six months. Do not lubricate the pivots, as any lubricant may attract dust and cause wear on the jewel bearings. Verify that the buckets move freely and the translator card or data logger resisters 0.01 inch as each bucket tips; slowly pour water from the bottle into the funnel, see Figure 1 (Section 9.0).

Record the procedure in the Station's Computer Log and the Instrument's Logbook. Reassemble the unit, plug the unit back in to it's power outlet. Don't forget change the status of channel 36 back to K code; c36/k.

5.4 QUALITY ASSURANCE

The sensor is factory calibrated and re-calibration is not necessary unless the unit is damaged. The unit should be replaced if damaged. For more detailed information, see section 4.2 of instrument's manual. The weight of the water will tip the bucket. A switch will close and the ZENO will count each closure. The ZENO will track each switch closure over a period of one hour. The ZENO will report results in inches per hour. The ZENO will store these one hour counts as data. Always, record any adjustments/maintenance in the Station's Computer Log and in the Instrument's Logbook.

5.5 TROUBLE SHOOTING

MONOPS provide technical support. Their technicians in some cases are factory trained and know the instruments and support equipment inside out. If the instrument cannot be quickly repaired in the field, a replacement will be shipped out the next day. If you encounter a complicated problem contact the regional senior technician or a MONOPS technician, see the contact list available in the DSR web pages. In most cases this contact list is posted in each CAMS. Assistance is just a telephone call away.

5.6 DATA ACQUISITION

All data is collected and stored in the ZENO Model 3200 data logger in the CAMS, the data is stored the ZENO solid state memory. The HUB computer in the regional office calls the ZENO by telephone every 15 minutes and the data is transferred by modems. The HUB computer is a Hewlett Packard Model 712 with a Unix operating system. The HUB collects and temporary stores the data. Every hour this data is transmitted by the internet connections to the main computer in the central office. The main computer is a Hewlett Packard Model 735, also, with a Unix operating system. The data is sorted and displayed on the various DSR web pages. Meteo Star developed the LEADS programs that run the DSR web pages. There is about a two-hour delay between real time data and displayed data on the DSR web pages.

6.0 SAFETY

- Beware of electrical shock hazards both from electrical power and Lightning. Never attempt to repair/clean unit during a thunderstorm and always unplug the unit.
- The Rain Gauge is attractive home for warps, bees, spiders, ants and snakes. Be careful and eliminate the pest if necessary before working on the unit.
- Be sure to reinstall all screening material before reassembling the unit; this will keep most

of the pest out of the unit.

7.0 RECORDS

Record all troubleshooting, adjustments, preventative maintenance and repairs in the Instrument's Logbook and the Station's Computer Log. Make detailed log entries in the Instrument's Logbook especially after resolving a difficult problem. These records will make troubleshooting easier in future. Plus, instrument down time will be minimized.

All records are kept for a minium of 5 years and should be written with a non-erasable permanent ink.

8.0 REFERENCES

Met One Instruments. 1994. *Model 375C 8" Rain Gauge Operation Manual.* P/N 375-9801. Met One Instruments. Grants Pass, OR.

IPS Meteo Star. 1997. *DSR Web Pages.* http://dsr.tnrcc.state.tx.us. TCEQ. Austin, TX

9.0 TABLES, DIAGRAMS, FLOW CHARTS AND FORMS

Figure 1 is a description of the basic assembly of the rain gauge. The following is a key to diagram parts.

Met One Instruments 8" Rain/Snow Gauge, Model 375C Basic Assembly Key

1) Tipping Bucket
2) Jewel Bearing
3) Signal Connector
4) Bucket Adjustment Nuts
5) Base Screen
6) Funnel
7) Output Cable Grommet
8) Reed Switch Cartridge
9) Adjustable Magnet Bracket
10) Lightning Protection Diode
11) Output Cable
14) Mounting Bracket

Figure 1 Met One Instruments 8" Rain/Snow Gauge, Model 375C Basic Assembly

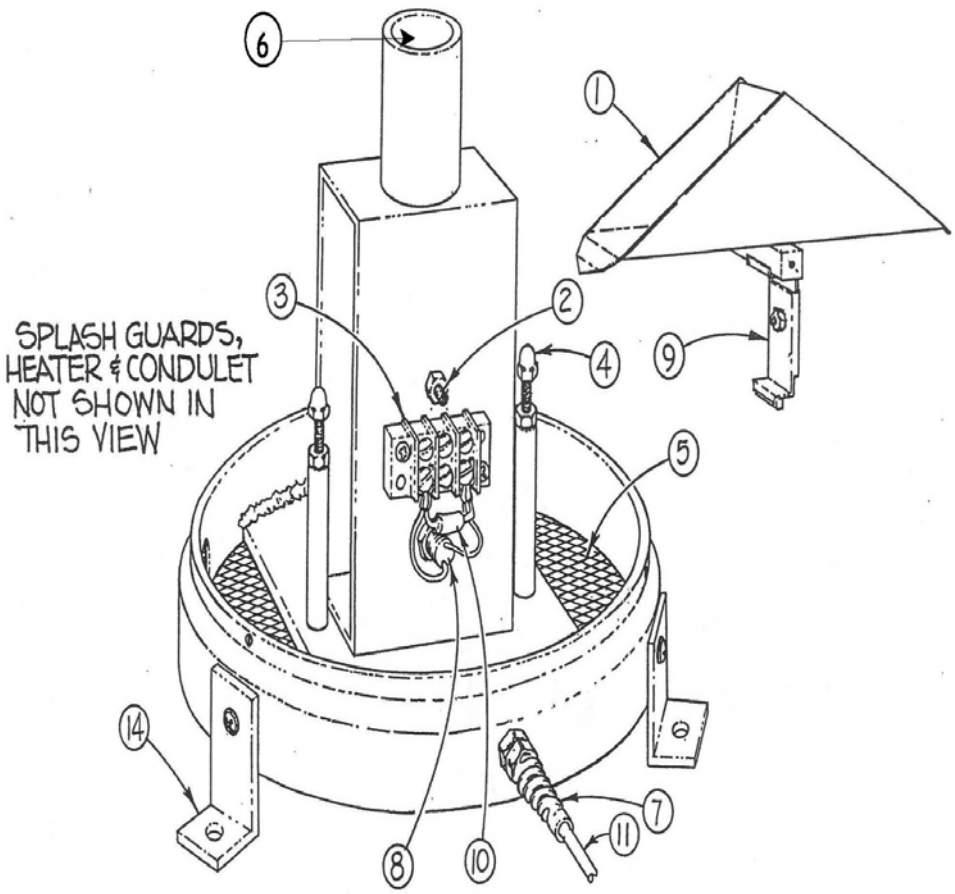

BASE ASSEMBLY

FIGURE 4-1

Appendix B

copy

STANDARD OPERATING PROCEDURE (SOP)

Title: Validation of Continuous Water Quality Monitoring Data Collected by Multiparameter Sonde

Team Leader: _____ Date: _____

Quality Control Review: _____ Date: _____

Section Manager: _____ Date: _____

Effective Date: 8/1/07 _____

1.0 PURPOSE

This SOP describes the procedure for Level I validation of ambient water quality data acquired from continuous water quality monitoring stations located within selected river basins of the State of Texas utilizing existing infrastructure and Leading Environmental Analysis and Display System (MeteoStar/LEADS) data processing software.

2.0 SCOPE AND APPLICABILITY

Continuous water quality monitoring data for validation may include, but are not limited to: temperature, pH, dissolved oxygen, specific conductivity, turbidity, nitrate, ortho-phosphorus, and ammonia. Automated validation procedures are performed by the LEADS computer system, and manual validation procedures are performed by the Water Data Validator.

3.0 METHOD OR PROCEDURAL SUMMARY

Data is examined for record completeness and reporting accuracy. Operator logs are reviewed for calibration and post-calibration records and unusual events. Data losses are investigated and data values exceeding established critical limits (Appendix A) are flagged or invalidated.

4.0 LIMITATIONS

4.1 Data validation is dependent upon the quality of field observations and reported calibration information in the Operator Log.

4.2 If data is reloaded or reprocessed after validation, previously flagged and/or recovered data defaults to the original status. Data must be validated again by referring to the Validator's Log and operator logs.

4.3 LEADS is a developing system. The software tools used to validate data may contain defects that may or may not be identified. This may necessitate checking one tool against another.

4.4 This procedure does not include Level II data validation with the SAS Program.

Copy

5.0 SAFETY

Usual office and computer safety practices apply. For additional information about the TCEQ safety program, see: http://home.tceq.state.tx.us/internal/admin/support/riskmgt/healthsafety/.

6.0 EQUIPMENT

Computer Hardware:

- 486 PC, 8MB RAM, 80 MB hard-drive or 68040 Macintosh, 8MB RAM 80 MB hard-drive
- Data logger, data communication hardware
- SCO UNIX computer system, 16 MB RAM, 500 MB hard-drive
- Modems (118)
- Central office HP Computer K460
- Ethernet Connection
- Seaspace Satellite System (images)

LEADS Hardware:

Processor	Name	Type
Central Processor	tnrcc3	HP K460
Validation	tnrcc1	HP D380
Web Server/Validation	dsr	HP J280
Validation/Weather	tnrcc5	HP 715
Validation/Weather	tnrcc6	HP 715
Satellite	tnrcc4	HP 735
Satellite	tnrccs	HP D390
Comms Front End	cfep	HP C110
Test Bed	tnrcc9	HP 735
Sys Admin	tiros	HP 712
Weather	wx	HP 712

Processor	Name	Type
Amarillo Hub	reg1	HP 712
Arlington Hub	reg4	HP 712
Tyler Hub	reg5	HP 712
El Paso Hub	reg6	HP 712
Midland Hub	reg7	HP 712
Beaumont Hub	reg10	HP 712
Austin Hub	reg11	HP 712
Houston Hub	reg12	HP 712
San Antonio Hub	reg13	HP 712
Corpus Christi Hub	reg14	HP 712
Harlingen Hub	reg15	HP 712

Data logger, data communication hardware:

- SCO UNIX computer system, 16 MB RAM, 500 MB hard-drive
- Modems (118)
- Central office HP Computer K460
- Ethernet Connection
- Seaspace Satellite System (images)

Computer Software (Validation Tools):

- HP UNIX
- SCO UNIX
- HP View Light, View, CDE (Common Desktop Environment)
- Exceed for PC
- Exodus for Macintosh
- LEADS pollution user interface
- LEADS user interface
- Microsoft Excel
- Microsoft Word
- Netscape
- Labview/Zeno datalogger application
- WXPlot
- AQPlot
- Power Point
- Fetch
- WXBase
- Fox Pro

COPY

7.0 PROCEDURES

7.1 Daily procedure

7.1.1 Verify the operation of the *in-situ* multi-parameter data sonde, the ZENO data logger, and completed data transmission in the morning and at close of business, at a minimum.

- Using an internet browser, access the Texas Commission on Environmental Quality (TCEQ) internal server at **http://rhone.tceq.state.tx.us/**. Within the **Water Data** section, view the *Daily Report*. Select the monitoring site, date, number of days to report, parameters of interest, and generate a report. Confirm the data retrieval for all parameters.
- If data is missing, access *Comms Report* within the Status Pages section to confirm communication between the remote sites and the central computer site.
- Access the *Operator Logs* to check for unscheduled maintenance or unusual events.
- Contact the site operators and the project lead for possible site investigation/repairs, if necessary.
- Contact the LEADS administrator for possible data recovery and/or to resolve communications problems.

7.2 Weekly Procedure

7.2.1 Using an internet browser, access the TCEQ internal server at http://rhone.tceq.state.tx.us/. Within the Status Pages Section, review the *Operator Logs* for each site to be validated. Confirm reporting of preventative maintenance information and calibration/post-calibration data for the previous seven days.

7.2.2 Access the LEADS Interface via an x-terminal emulation package (Exceed). Contact the LEADS Administrator for access rights, validation rights, and passwords.

7.2.3 Access the Manual Validation Retrieve window via Manual Validation Login.

- Select the beginning month, day, and time of the data validation interval.
- Select the end month, day, and time of the data validation interval.
- Select the appropriate time zone.
- Select the “Water Data” Database.
- Select the Region.
- Select sort by “CAMS.”
- Select “Show Sites.”
- Highlight the CAMS site for validation from the site list.
- Select “Show Available Parameters.”
- Highlight the validation parameters. Hold down the CTRL key to select up to four validation parameters at one time.
- Select “Display Data.”

copy

- Compare the automatically generated LEADS data flags with the Operator Logs. Edit any data flagged incorrectly by selecting the data interval in the Manual Validation window and selecting the appropriate data flag from the EDIT drop-down menu. Document any changes in the Validator's Log. See Appendices A and B for data flags and flag priorities.
- If the Operator Log indicates that a parameter failed post calibration, flag the data associated with that parameter for the corresponding time period as invalid with an Ambient Quality Invalid (AQI) flag. If Preventive Maintenance Action (PMA) flags have been automatically generated, the data for the subsequent hour is flagged AQI.
- Investigate irregular data patterns by referring to the Operator Log, contacting the site operator for further information, using Best Professional Judgment (BPJ), and/or notifying the Surface Water Quality Monitoring (SWQM) project lead.
- After all data flagging is complete, choose "Validate Data" from the FILE drop-down menu. Note any changes made to the data during manual validation in the Manual Validation Notes window. Include detailed explanation for any changes. Initial all entries. Ensure all changes are documented in the hard copy Validator's Log.
- Select the "Validate" button on the Manual Validation Notes Page to complete the validation procedure.

8.0 CALCULATIONS

Not applicable.

9.0 QUALITY CONTROL

9.1 Each experienced data validator is responsible for review, validation, and verification of data from assigned ambient stations.

9.2 Maintain detailed records in the form of a hardcopy Validator's Log that includes all activities and follow-up actions relating to ambient data. The records should be sufficient to reconstruct the data validation event.

9.3 The data validator reviews and questions any part of the measurement process and initiates data reviews and corrective actions to bring the process back into compliance.

9.4 The data validator uses a supplemental tool to examine water quality data. The data is reviewed using a SAS Program that can graph more of the data record than LEADS, and allows easy manipulation of scale. This Level II data validation ensures that data anomalies that are not apparent in LEADS are discovered and data is qualified accordingly.

10.0 DEFINITIONS

Not applicable.

copy

11.0 REFERENCES

- LEADS Operator's Manual
- LEADS Web pages
- *Monitoring Operations Hazardous Waste Disposal Pla*n
- *TCEQ Operating Policies and Procedures*, Chapter 6.13
- Training Material: Manual Validation

12.0 POLLUTION PREVENTION AND WASTE MANAGEMENT

Supervisors, sampling personnel, and laboratory analysts should identify and implement innovative and cost-saving waste reduction procedures as part of the method development, and review and revision of standard operating procedures. Wastes that do result from these procedures are managed and disposed in accordance with appropriate state and federal regulations.

Refer to Chapter 6.13 of the *TCEQ Operating Policies and Procedures* for guidelines on general recycling, waste reduction, and water and energy conservation. Review these procedures for specific employee responsibilities and mechanisms for office related waste prevention and management. Consult the *Monitoring Operations Hazardous Waste Disposal Plan* for laboratory specific waste minimization recommendations and requirements for proper handling of hazardous waste that result from laboratory procedures.

13.0 SHORTHAND PROCEDURE

13.1 Daily

- Confirm the collection and transmission of data.
- Contact the LEADS administrator for recovery of lost data, if necessary.
- Contact area operators and the project lead for site investigations, if necessary.

13.2 Weekly

- Investigate any irregular data patterns.
- Confirm all data flags.
- Edit any incorrect data flags.
- Document any data changes in the Validator's Log.
- Validate data.

copy

Appendix A

Flags used by MeteoStar/LEADS

If there are less than nine valid five-minute samples within an hour, consult the priorities to determine which flag to assign to the hourly average. Flags with higher priorities overwrite flags of lower priority.

Flag	Description	Manually Set	Automatic	Priority
LST	Lost or missing data - indicates that data for this sample period is not stored in the MeteoStar database		X	1
LIM	Data failed one or more automatic quality checks		X	5
PMA	Instrument in preventative maintenance mode	X (set by field operators)		6
AQI	Data invalid	X		12
FEW	Not enough samples to create an hourly average		X	4
NEG	Data failed NEG test indicates data values are too negative; normally low negative values are set to zero by the MeteoStar software		X	3
VAL	Data valid	X	X	0

copy

Appendix B

Validator Alert Limits

These limits are established to alert the water data validator to values exceeding the water quality standard and/or the expected normal range as determined by historical data for each site.

Green Creek at CR 266 and Resley Creek at CR 394		
Parameter	**Lower Limit**	**Upper Limit**
Temperature (°C)	< 1.00	> 33.00
pH	< 5.00	> 9.00
Dissolved Oxygen (mg/l)	0.00 to -0.50** < -0.51	> 16.00
Specific Conductivity (μmhos/cm)	< 163	> 1260
Turbidity (NTU)*	0	1000

North Bosque River on Riverside Road in Clifton and Leon River at Fauntleroy Park in Gatesville		
Parameter	**Lower Limit**	**Upper Limit**
Temperature (°C)	< 1.00	> 33.00
pH	< 5.00	> 9.00
Dissolved Oxygen (mg/l)	0.00 to -0.50** < -0.51	> 16.00
Specific Conductivity (μmhos/cm)	N. Bosque River < 146 Leon River < 181	> 938 > 1428
Turbidity (NTU)*	0	1000

* Limits based upon instrument range rather than actual historical data due to short term environmental effects.
**Generates an automatic NEG flag.
°C - degrees Centigrade
mg/l - milligrams per liter
μmhos/cm - microμmhos/centimeter

COPY