# APPENDIX A

# Overall Plan View of Flare Operation Facility Area

The drawing in this appendix is provided by the John Zink Company LLC as a tool to help project reviewers understand the locations of several items of interest to this project. Some items in the drawings are not part of the Comprehensive Flare Study Project but are not excluded from this standard ZINK drawing.

Of interest are the two small circles in the lower middle that depict the steam and air flare locations (labeled on drawing). In addition, the facility control room (labeled on drawing) location is depicted as a square box in the middle left side of this drawing.

Each of the in situ and remote sensing measurement technologies will have a clear view of the steam and air flare tips to allow for quality measurements.

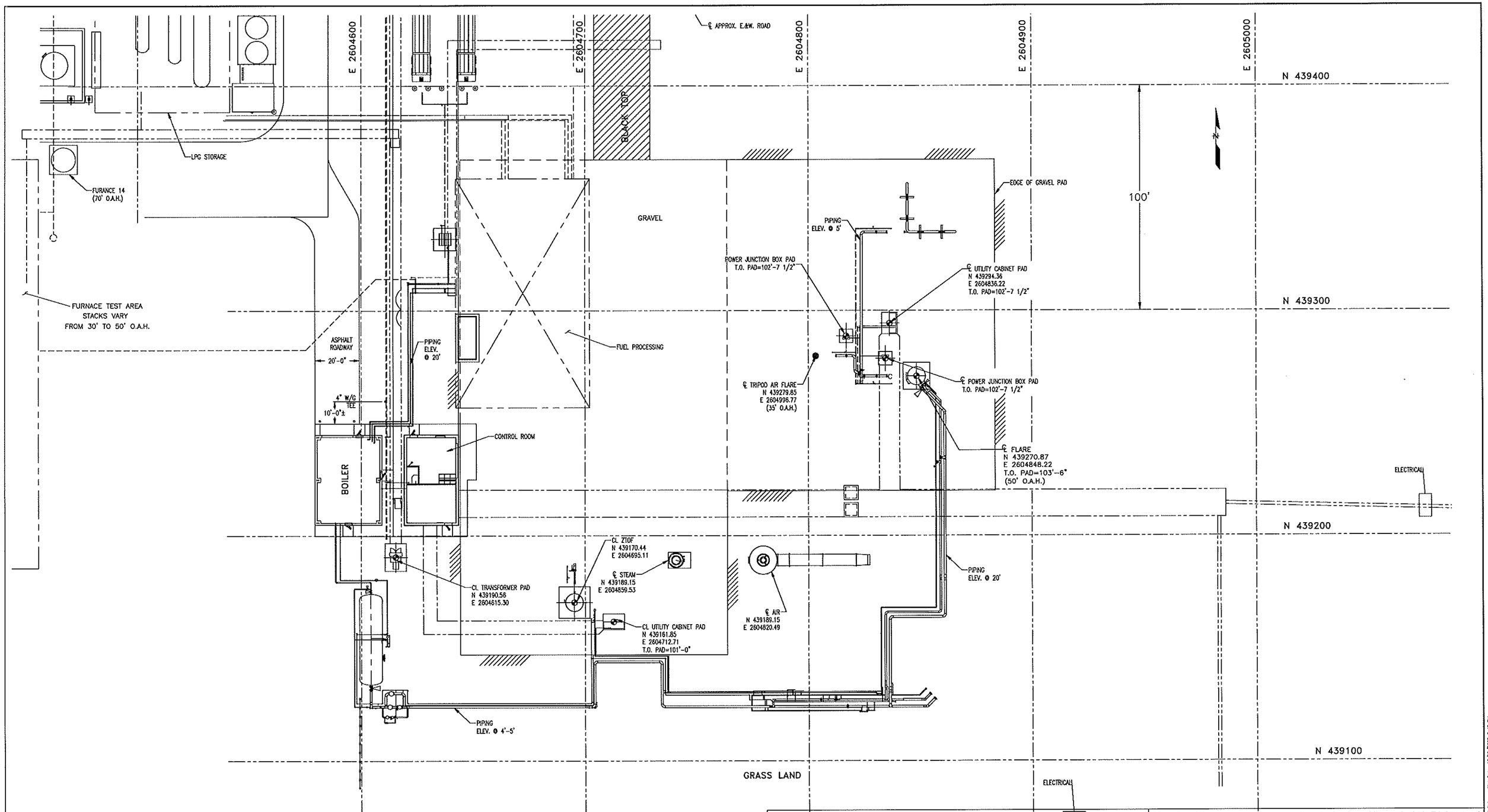


OVERALL PLAN VIEW

| BASE NUMBER | APPROVAL |
|---|---|
| | |

| NO. | REVISION DESCRIPTION | BY | CK. | APP. | DATE |
|---|---|---|---|---|---|
| | | | | | |

This drawing and the information contained herein is of a confidential nature and the property of John Zink Company and shall not be copied, traced, photographed, or reproduced in any manner nor used for any purpose whatsoever, except by written permission of John Zink Company. This drawing shall be returned to John Zink Company upon request. Copyright 2000, John Zink Company, LLC. All rights reserved.

FOR: JOHN ZINK COMPANY LLC
USER: JOHN ZINK COMPANY LLC
JOBSITE: TULSA, OK
R&D TEST FACILITY

JOHN ZINK®
JOHN ZINK COMPANY LLC
R&D TEST FACILITY, CALL 1-918-234-5800 FAX (918) 234-5895

FLARE TEST FACILITY
OVERALL
PLAN VIEW

S.O. NO. –
P.O. NO. –
DR. DG DATE: 10/9/09
CK. DATE:
APP. DATE:
CERTIFIED
DATE:
DRAWING NUMBER D-0-9098059-201
REV. 0
SCALE AS NOTED
SHEET 1 of 1

File Name: n:\cad\wp-form\D098059\drawings\D098059.dwg Plot Date: 10/19/2009 3:49 PM

# APPENDIX A1

# Satellite Photo of Flare Operation Facility Area, Subcontractor Location

The photo in this appendix is provided by Google Earth, it is presented as a tool to help project reviewers understand the approximate locations of the major items of the Comprehensive Flare Study Project.

The facility control room, identified on the center left of the photo, is where the steam and air flare (lower center of photo) operations are controlled. In the center of the photo is a depiction of the location of the crane that will move and support the flare flue gas sampling device. The other icons that are shown are representative of the approximate location of where the subcontractors will be making measurements during the flare tests.

As can be seen in the photo, the Aerodyne and TRC companies are very close to the flare stacks since they will be making the in situ measurements for this project. The LSI, Telops and IMACC companies are at a greater distance from the flare stacks, since these companies will be making the remote sensing measurements for the project.

Control Room
IMACC
LSI
Telops
Crane
Air Flare
Steam Flare
Aerodyne
TRC
100 ft
© 2010 Google
©2009 Google
Imagery Date: Mar 29, 2010
15 S 244263.09 m E 4008463.20 m N elev 639 ft
Eye alt 980 ft

# APPENDIX A2

# Satellite Photo of Flare Operation Facility Area, Observer Room Propylene Storage Location

The photo in this appendix is provided by Google Earth, it is presented as a tool to help project reviewers understand the approximate locations of the major items of the Comprehensive Flare Study Project.

The facility control room, identified on the center left of the photo, is where the steam and air flare (lower center of photo) operations are controlled. In the top center is the location of the observers when outside. The far left center shows the location of the observers' room. The location center top left shows the propylene storage area.

As can be seen in the photo, the Aerodyne and TRC companies are very close to the flare stacks since they will be making the in situ measurements for this project. The LSI, Telops and IMACC companies are at a greater distance from the flare stacks, since these companies will be making the remote sensing measurements for the project.

Observation Road Location
Propylene Storage Location
Nitrogen Location
Observation Room Building
Boiler Location
Control Room
Steam Flare
Air Flare
Steam Accumulator
312 ft
© 2010 Google
© 2010 Europa Technologies
©2009 Google
Imagery Date: Mar 29, 2010
15 S 244193.32 m E 4008458.59 m N elev 636 ft
Eye alt 1696 ft

# APPENDIX B

# TRC Modified EPA Method 3A

# $O_2$ and $CO_2$

The method presented in this appendix is the documentation provided by the TRC Company, which will be making the flare flue gas in situ post-combustion oxygen and carbon dioxide concentration measurements, for the Comprehensive Flare Study Project.

The difference between the EPA Method 3A and the TRC Modified Method 3A is that the TRC Modified Method 3A is applicable to all TRC measurement programs using Method 3A.

| Title: **Determination of Oxygen and Carbon Dioxide Emissions From Stationary Sources - Instrumental Analyzer Procedure (40 CFR Part 60, Appendix A, Method 3A)** | Procedure Number: **AM-203A** |
|---|---|
| Supersedes: None | Revision Number: 00 |
| Reason for Revision: Not Applicable | Effective Date: 05/19/06 |

| Authorization Signatures | | |
|---|---|---|
| 05/15/06 | 6/21/06 | 6/26/06 |
| Author — Date | Functional Area Manager — Date | Quality Assurance — Date |

## 1.0 PURPOSE, SCOPE, AND APPLICABILITY

This procedure establishes standardized test conditions and sample handling procedures for the determination of oxygen ($O_2$) and carbon dioxide ($CO_2$) using a continuous analyzer system. This procedure will discuss all equipment and gases needed to collect and analyze gas samples for $O_2$ and $CO_2$, routine types and frequencies of quality control (QC) samples (e.g., analyzer calibration), and forms and spreadsheets used to document and process collected data.

This procedure details the implementation of the measurement method. This SOP does not instruct the user to operate the specific instrumentation required to implement this method. The user is instructed to refer to each instrument's user manual for proper operation of the instrument.

The project-specific test plan must be consulted to verify test protocol details, the number of samples to collect, length of sampling periods, and QC samples required by the applicable state regulatory agency.

This SOP is applicable to all TRC air measurements programs using Method 3A for the collection and analysis of stack gas for $O_2$ and $CO_2$ concentrations.

## 2.0 REFERENCES

US EPA Method 3A – Determination of Oxygen and Carbon Dioxide Concentrations in Emissions from Stationary Sources (Instrumental Analyzer Procedure), 40 CFR Part 60, *New Source Performance Standards*, Appendix A, *Test Methods and Procedures*, Revised 5/15/06.

US EPA Method 7E – Determination of Nitrogen Oxides Emissions from Stationary Sources (Instrumental Analyzer Procedure), 40 CFR Part 60, *New Source Performance Standards*, Appendix A, *Test Methods and Procedures*, Revised 5/15/06.

$O_2$ and $CO_2$, Analyzer Operating Manuals

TRC SOP AM-005: *Air Measurements Business Unit Software Control*

TRC SOP AM-207E: *Determination of Nitrogen Oxides Emission from Stationary Sources—Instrumental Analyzer Procedure*

## 3.0 DEFINITIONS

**Calibration Drift** – The difference in concentration of the mid level calibration gas measured before and after the testing period. Calibration drift values are typically presented as a percentage (%).

**Calibration Error** – The difference in concentration between the certified concentration and the measured concentration of the calibration gas. Calibration error values are typically presented as a percentage (%).

**Calibration Gas** – A gas with known concentration(s) of the chemical components.

**Calibration Span Value** – Certified value of the upper calibration gas concentration; the upper limit of the measurement range.

**CEM** – Continuous Emissions Monitoring

**Direct Calibration** – When the calibration gases are introduced directly to the analyzer.

**MSDS** – Material Safety Data Sheet

**Response Time** – The elapsed time interval from the entry of the pollutant gas into the sampling system to when it is detected on the analyzer.

**Shall/Must/Will** – Words used to indicate mandatory requirements that must be met.

**Should/May** – Words used to denote a recommended practice.

**System Bias** – The difference in concentration of the calibration gas measured during the rack calibration and the system calibration. System bias values are typically presented as a percentage (%).

**System Calibration** – When the calibration gases go through the entire measurement system, including valve assembly, sample line(s), moisture removal system, etc.

**Zero Drift** – The difference in concentration of the zero calibration gas measured before and after the testing period. Zero drift values are typically presented as a percentage (%).

## 4.0 SUMMARY OF RESPONSIBILITIES

Functional Area Managers (e.g., Sector Manager, Office or Operations Manager, Project Manager) are responsible for ensuring implementation of the SOP.

Quality Assurance personnel are responsible for:

- Review and approval of this SOP.
- Auditing, at the direction of a Functional Area Manager, to verify implementation of SOP.

TRC Air Measurements staff members are responsible for performing tasks in accordance to this SOP.

TRC field staff members are responsible for:

- Sampling/Analyzing – The CEM Technician

## 5.0 SAFETY CONSIDERATIONS

The field team leader, project manager, or the corporate health and safety officer can address any questions or safety concerns. The following must be considered by all staff performing instrumental analysis of oxygen or carbon dioxide emissions:

- When working with or around chemicals, proper personal protection equipment (PPE) should be worn.
- Always read the MSDS for the chemicals that you are working with or may encounter while implementing these procedures.
- Sampling can be conducted at heights and fall protection may be required to access the sample location.
- The probe, filter box, and heated sample lines are extremely hot and can cause severe burns. Leather work gloves should be worn when moving the probe or filter box.

## 6.0 PROCEDURE

A sample of gas is withdrawn from the source through a heated probe, heated sample line, through a heated filter, and then analyzed on site.

> ***Note:***
> A heated sample line in not required to transport dry gas (dry at the point of generation or source) or for systems that measure the $O_2$ or $CO_2$ concentration on a dry basis. Or, the effluent can be transported in non-heated lines after the moisture removal module.
>
> If the $O_2$ and $CO_2$ sampling is conducted in conjunction with $NO_x$ and $SO_2$ sampling, the probe, sample line, and filter must be heated.

This SOP does not instruct the user to operate the specific instrumentation required to implement this method. The user is instructed to refer to each instrument's user manual for proper operation of the instrument.

No sample fractions are generated for this method.

## 6.1 Equipment List

The following list of equipment and supplies needed to assemble and operate the sampling system:

- 1 - Heated CEM sample probe with built in filter (heated not required if transporting dry gases and not also sampling for $NO_x$ and $SO_2$).
- Heated sample line (long enough to connect the sample location to the sample conditioner) (heated not required if transporting dry gases and not also sampling for $NO_x$ and $SO_2$).
- Sample conditioner (moisture removal system).
- Sample pump.
- $O_2$ analyzer (Servomex, CAI, or equivalent).
- $CO_2$ analyzer (Servomex, CAI, or equivalent).
- Data recorder (Strata, Yokagowa, National Instruments, chart recorder, or equivalent).

## 6.2 Reagents, Chemicals, and Gases

The following chemicals and gases are needed to assemble and operate the sampling system:

- Nitrogen for zero calibration.
- Mid range calibration gas 40-60 % of the span range.
- High range calibration gas 80-100 % of the span range.

Calibration gases may be individual or blended with other components, in a nitrogen balance. Gases must be certified per EPA G-1 procedure (i.e., Protocol 1 gases).

## 6.3 Pre-test Preparation

Prior to going in the field, ensure that all equipment is in working order and the internal filters on each analyzer are clean. Ensure that all heated equipment properly heat and that no calibration gases have expired.

Select the proper analyzer range for the expected concentrations. Ensure that calibration gases meeting the criteria established in Section 6.2 of this SOP are available.

## 6.4 Sampling Points

For molecular weight determinations, install the sampling probe so that the probe is located in the centroid of the stack. Refer to Section 8.1 of Method 7E (or TRC SOP AM-207E) to determine the required sampling points by conducting a stratification test to determine the sampling traverse points to be used, unless otherwise specified in the applicable regulation or Agency(ies).

Certain EPA test methods require other locations be measured or traversed; follow the procedures specified in those methods and/or other pertinent SOP to make certain all regulatory requirements have been met.

## 6.5 Sampling System Setup

The sampling system is set up as follows:

1. Connect the line to the sampling probe (heated or not heated – see Section 6.1). There are two connections. One is the sample line and the other is the calibration line.
2. Run the line to the sample conditioner (heated or not heated – see Section 6.1) and connect the sample line to the inlet of the sample conditioner.
3. Connect the outlet of the sample conditioner to the inlet of the sample pump located in a climate-controlled area (i.e., a TRC trailer or place supplied by facility).

   > ***Note***: Some TRC testing trailers have the sample pump located upstream of the sample conditioner to facilitate the delivery of a hot, wet sample to THC analyzers. If this is the case, steps two and three above are reversed.

4. Connect the outlet of the sample pump to the inlet of the sample manifold located in a climate-controlled area (i.e., a TRC trailer or place supplied by facility). This manifold enables the sample to be delivered to various analyzers with rotameters inline for flow control of the sample. From the manifold, the sample is partitioned to the $O_2$ and $CO_2$ analyzers.
5. Connect the analyzers to the data recorder.
6. Turn on the analyzer, sample pump, and heated sampling line. Follow manufacturer's criteria for warm up and temperature stabilization prior to calibration.

## 6.6 Sampling System Leak Check

A leak check for this sampling system must be performed by capping the end of the CEM probe while the sample pump is pulling on the system.

- Some sample systems are configured such that the rotometer ball will stop moving and read zero.
- Other sample systems enable the system to be isolated with a knife valve at the pump. Close the knife valve, and note the sample system vacuum. The vacuum must not decrease by more than 1" over sixty seconds.

## 6.7 *Pre-Test Calibration and Response Time Determination*

Once the analyzers are stable (Per manufacturer stability documentation, or approximately 1-hour after the analyzer is turned on if stability documentation is not available) the calibration procedure can begin. There are two types of calibrations:

- Direct Calibration - Direct calibration is when the calibration gases are introduced directly to the analyzer.
- System Calibration - System calibration is when the calibration gases go through the entire measurement system.

The response time for the sampling system must also be determined.

### 6.7.1 Direct Calibration and Calibration Error Test

Direct calibration is when the calibration gases are introduced directly to the analyzer with out going through the heated lines.

1. Connect the zero gas to the calibration line. Turn on the zero calibration gas.
2. Wait until the analyzer stabilizes (approximately 1 to 2 minutes).
3. Adjust the zero on the analyzer so the recorder reads zero. (See analyzer operating manual for details on how to adjust the zero.)
4. Connect the high-level (span) calibration gas to the calibration line. Turn on the calibration gas.
5. Wait until the analyzer stabilizes (approximately 1 to 2 minutes).
6. Adjust the span value on the analyzer so the recorder reads the span gas value. (See analyzer operating manual for details on how to adjust the span value.)
7. Connect the mid level calibration gas and record the measured value.
8. Calculate the calibration error (see section 6.10.1) for these three calibration points. The calibration error must be less than 2% of the respective calibration span or 0.5% $O_2$ or $CO_2$.
9. If the system passes the calibration error test, proceed with the calibration. If the system fails the calibration error test, determine the cause of the failure and repeat the calibration error test.

### 6.7.2 System Calibration or System Bias Check

The system calibration is when the calibration gases go through the whole system. Make no changes to the analyzer during this sequence.

> ***Important:*** Make no changes to the analyzer during this sequence.

1. Connect the zero gas to the calibration (bias) line. Turn on the zero calibration gas.
2. Wait until the analyzer stabilizes (approximately 1 to 2 minutes). Record the value.

3. Connect the high level or the mid level calibration gas to the calibration (bias) line. Use the calibration gas that most closely resembles the concentration expected in the stack exhaust. Turn on the calibration gas.
4. Wait until the analyzer stabilizes (approximately 1 to 2 minutes). Record the reading.
5. Calculate the system bias (see section 6.10.2) for these two calibration points. The system bias must be less than 5% of the calibration span value or ≤0.5% $O_2$ or $CO_2$.
6. If the system bias test is passed, proceed with sampling. If the system fails the system bias test, determine the cause of the failure and correct it. Repeat both the direct calibration and system calibration.

### 6.7.3 Response Time Test

Prior to testing, the response time for the system must be determined.

1. Connect the zero gas to the calibration line. Turn on the zero calibration gas.
2. Wait until the analyzer stabilizes (approximately 1 to 2 minutes).
3. Introduce the calibration gas utilized for the system calibration above.
4. Record the time from the calibration gas switch until the analyzer reads 95% of the expected value.
5. Introduce the zero gas.
6. Record the time from the calibration gas switch until the analyzer reads 95% of the expected value.
7. Record the upscale (zero to calibration gas) and downscale (calibration gas to zero) times. The longer of these two times shall be utilized as the response time. When sampling, an interval equal to or greater than twice the calculated response time shall be allowed prior to the beginning a test run.

## *6.8 Sampling*

The length of a sample run is defined in the test protocol. Typically, three test periods of equal length are required.

Sampling begins upon the completion of all quality assurance and calibration procedures. Ensure that the source being sampled is at the proper load based on the test protocol and/or criteria established by the pertinent regulatory agency(ies) or published regulation.

1. Place the sample probe at the appropriate point in the source's exhaust stream.
2. With the sample pump operating, open the sample valve to enable the source's exhaust to be pulled into the sample system.
3. Adjust sample system pressure to make certain that the same flow rate of stack exhaust is being delivered to the analyzer as was delivered to the analyzer during calibration.

4. After 2x response time determined in Section 6.7.3 has elapsed, start the data recorder and begin the sampling period.
5. All data will be reported in percent by volume.
6. At the conclusion of testing all data will be corrected for analyzer drift and system bias using the equation in Section 6.10.4.

## 6.9 Post-test Calibration

The post-test calibration is the calibration drift test.

> ***Important:*** Make no changes to the analyzer prior to or during this sequence.

1. Connect the zero gas to the calibration line. Turn on the zero calibration gas.
2. Wait until the analyzer stabilizes (approximately 1 to 2 minutes).
3. Record the measured zero value.
4. Connect the calibration gas used for the system calibration and response time tests to the calibration line. Turn on the calibration gas.
5. Wait until the analyzer stabilizes (approximately 1 to 2 minutes).
6. Record the measured gas value.
7. Calculate the calibration drift (see Section 6.10.3) for these two calibration points. The calibration drift must be less than 3% of the span range or ±0.5% $O_2$ or $CO_2$.
8. If the system passes the calibration drift test, the data recorded during the sampling period is valid and the next test period may begin.
9. If the system fails the calibration drift test, the data is invalid and the sampling period must be repeated. Repeat both the direct calibration and system calibration test. When both meet the criteria established above, repeat the sampling period.
10. If the post-run low- and upscale-bias (or calibration error) checks pass, but he low-or upscale-drift exceed the specification, the run data are valid, but a 3-point calibration error test and a system bias check must be performed and passed before any additional test runs are done.
11. For dilution systems, data from a 3-point system calibration error test may be used to meet the pre-run 2-point system calibration error requirement for the first run in a test sequence. Also, the post-run bias (or 2-point calibration error) check data may be used as the pre-run data for the next run in the test sequence.

## 6.10 Calculations

Use the following equations to correct measured concentrations for system bias and/or drift.

### 6.10.1 Calibration Error

$$Error = \frac{Cr - Ca}{span} \times 100$$

*Error* = Calibration error (%)

*Ca* = Actual calibration gas concentration (ppm)

*Cr* = Analyzer response to calibration gas (ppm)

*span* = The calibration range, (ppm)

### 6.10.2 System Bias

$$Bias = \frac{Csc - Crc}{span} \times 100$$

*Bias* = System bias, (%)

*Csc* = System calibration value for a given gas, (ppm)

*Crc* = Rack calibration value for a given gas, (ppm)

*span* = The calibration range, (ppm)

### 6.10.3 Calibration Drift

$$Drift = \frac{Cf - Ci}{span} \times 100$$

*Drift* = Calibration or Zero drift, (%)

*Cf* = Final system calibration response, (ppm)

*Ci* = Intial system calibration response, (ppm)

*span* = The calibration range, (ppm)

### 6.10.4 Adjust Results for System Bias

$$Cgas = (Cavg - Co) \times \frac{Cma}{Cm - Co}$$

*Cgas* = Corrected gas concentration, (%)

*Cavg* = Average gas concentration as measured, (%)

*Co* = Average of the initial and final system bias checks for the zero gas, (%)

*Cm* = Average of the initial and final system bias checks for the mid or high gas, (%)

*Cma* = Actual gas concentration of the calibration gas (mid or high) used, (%)

### 6.11 Method Options

The placement of the sample conditioner can be based on site-specific conditions. The sample line prior to the conditioner must be heated if measuring $O_2$ and $CO_2$ in conjunction with $SO_2$ or $NO_x$. As the $O_2$ and $CO_2$ analyzers operate on a dry measurement basis, once moisture is removed no heat is required for the sample line ("dry line.") This dry line can be used to connect the sample conditioner to the sample pump.

## 7.0 QUALITY CONTROL PROCEDURES

The following list is a summary of the quality control procedures used to ensure sample integrity:

- If sampling in conjunction with $SO_2$ or $NO_x$, the probe and filter must stay at 250°F (± 25°F) to ensure that the sample stays dry.
- Zero Drift must be less than 3% of the calibration span value or ±0.5% $O_2$ or $CO_2$.
- Calibration Drift must be less than 3% of the calibration span value or ±0.5% $O_2$ or $CO_2$.
- Calibration Error must be less than 2% of the calibration span value or ±0.5% $O_2$ or $CO_2$.
- System Bias must be less than 5% of the calibration span value

There are no additional QC samples to be collected for this method.

All calculations and field entered data will be peer reviewed (i.e., reviewed by another member of the field team) to ensure accuracy and completeness. A peer or supervisor should review all spreadsheet, worksheet, and/or lab notebook entries. In each case, the reviewer will sign (or initial) and date each page to indicate completion of the review and concurrence with the content.

The accuracy and completeness of spreadsheets used for the activities described in this SOP will be verified, approved for use by the Project Manager, and revisions controlled according to the procedures described in TRC SOP AM-005.

A backup copy of all electronic data files (e.g., spreadsheets containing project data) should be made prior to leaving the on-site testing location.

## 8.0 TRAINING AND/OR QUALIFICATIONS

All persons performing Method 3A must have read this SOP, Method 3A, and Method 7E and have an understanding of the contents. An understanding of how the analyzer and data recording

system operates is also needed. It is required that a person operating the CEM system for the first time does so with supervision from an experienced CEM operator.

## 9.0 FORMS, RECORDS, AND DOCUMENTATION

The required forms for this SOP are:

- A log of start and stop times should be created during the testing program.
- Calibration sheets for the equipment used during the operation of the sampling system.

For this SOP, all records and data are electronically generated. As described in SOP AM-005, a copy of the approved data file should be placed in TRC office files prior to leaving for the field. The required spreadsheets for this SOP are:

- Excel spreadsheet (or equivalent spreadsheet which includes pertinent system calibration, sampling, and calculation records).

A copy of the facility data showing that the equipment being tested is in operation during the testing periods is also required.

All the facility data records, data sheets, forms, spreadsheets, and other data files (once completely filled out) must be given to the field team leader for insertion into the TRC project files.

# APPENDIX B1

# TRC Modified EPA Method 18

# GC Analysis

The method presented in this appendix is the documentation provided by the TRC Company, which will be making the in situ flare flue gas pre-combustion and post-combustion gas chromatography (GC) analysis of the methane, ethane and propylene concentrations, for the Comprehensive Flare Study Project.

The difference between the EPA Method 18 and the TRC Modified Method 18 is that the TRC Modified Method 18 is applicable to all TRC measurement programs using Method 18.

| Title: **Measurement of Gaseous Organic Compound Emissions by Gas Chromatography – Direct Interface Method (40 CFR 60, Appendix A, Method 18)** | Procedure Number: **AM-218** |
|---|---|
| Supersedes: None | Revision Number: 00 |
| Reason for Revision: Not Applicable | Effective Date: 12/28/07 |

Authorization Signatures

| Author | Date | Functional Area Manager | Date | Quality Assurance | Date |
|---|---|---|---|---|---|
| John Sloan | 12/28/07 | [illegible] | 12/28/07 | Robin Nelson | 12/28/07 |

## 1.0 PURPOSE, SCOPE, AND APPLICABILITY

This procedure establishes standardized test conditions and sample handling procedures for samples collected from a stationary emission source and analyzed for project-specified hydrocarbons using gas chromatograph (GC) and an appropriate detector. This procedure will discuss all equipment and reagents needed to analyze a sample collected using the direct interface procedure of Method 18, routine types and frequencies of quality control (QC) samples (e.g., analyzer calibration), and forms and spreadsheets used to document and process collected data.

The project-specific test plan must be consulted to verify test protocol details, the number of samples to collect, length of sampling periods, and QC samples required by the applicable state regulatory agency.

This procedure details the implementation of the measurement method. This SOP does not instruct the user to operate the specific instrumentation required to implement this method. The user is instructed to refer to each instrument's user manual for proper operation of the instrument.

This SOP is applicable to all TRC measurements programs using the Method 18 Direct Interface method for the collection and field analysis of hydrocarbons.

## 2.0 REFERENCES

US EPA Method 18, *Measurement of Gaseous Organic Compound Emissions by Gas Chromatography*, Test Methods and Procedures, Appendix A, *New Source Performance Standards*, 40 CFR Part 60, revised July 1, 2002.

TRC SOP AM-005: *Air Measurements Practice Software Control*

## 3.0 DEFINITIONS

**GC** – Gas Chromatograph

**Detector** – A detector that can detect the hydrocarbon species required by the testing within the quality control limits of this method

**FID** – Flame Ionization Detector

**TCD** – Thermal Conductivity Detector

**ECD** - Electron Capture Detector

**PID** - Photo Ionization Detector

**Shall / Must / Will** – Words used to indicate mandatory requirements that must be met.

**Should / May** – Words used to denote a recommended practice.

**MSDS** – Material Safety Data Sheet

## 4.0 SUMMARY OF RESPONSIBILITIES

Functional Area Managers (e.g., Practice Leader, Operations Manager, Project Manager) are responsible for implementation of the SOP.

Quality Assurance personnel are responsible for:

- Review and approval of SOP.
- Auditing, when directed by a Functional Area Manager, to verify implementation of SOP.

TRC Air Measurements employees are responsible for performing tasks in accordance to this SOP.

TRC field staff members are responsible for:

- Analysis and all associated calculations – GC Operator

## 5.0 SAFETY CONSIDERATIONS

The field team leader, project manager, or the corporate health and safety officer can address any questions or safety concerns.

- When working with or around chemicals proper personal protection equipment (PPE) should be worn. Always read the MSDS for the chemicals that you are working with or may encounter while implementing these procedures.
- Avoid breathing the dust when transferring contents of silica gel impinger.
- When glassware breaks use work gloves to remove the pieces and place them in a safe place for later disposal.

- Several parts of the GC are heated to over 200°C and should not be touched.
- The syringes used are extremely sharp and could have unknown chemicals in the needles. Caution should be used whenever handling syringes.
- The cylinders contain high-pressure gases and should be handled with caution and stored according to proper facility guidelines.
- Many hydrocarbon species are toxic and flammable. Care should be taken in determining the safety procedures for each compound of interest that is required for the project.

## 6.0 PROCEDURE

This analytical method is for the analysis of source gas samples collected using Method 18. The sample gas collected is analyzed in the field by a GC equipped with an appropriate detector. Most TRC GCs are set up with a column and conditions appropriate for the analysis of C1-C7 n-alkanes. These are often appropriate for many of the compounds of interest typically sought by industrial clients. Retention times are determined and calibration is performed with certified gaseous standards of the compounds of interest in air or nitrogen. Compounds of interest are identified by retention times or retention time ranges and a quantitative analysis is performed.

***NOTE:*** Although other hydrocarbon species are easily detected using TRC GCs, appropriate time must still be spent in the TRC laboratory to perform analyses for verification of the GCs performance on unfamiliar compounds prior to embarking on any field testing.

### *6.1 Equipment List*

The following list of equipment is needed to assemble and operate the sampling system:

- Gas Chromatograph with an appropriate detector to be used.
  - The GC will include all other pieces of equipment to perform the analyses, which include but are not limited to heated sample loops, ovens, flow regulators for support gases, and connections for columns.
- 1 Chromatography column. Numerous options are available depending on the analytes of interest. Consult column manufacturers for more info. Suggested columns for light hydrocarbons ($C_1$-$C_7$) are:
  - 60 meter GS-Alumina capillary column; or
  - 8-ft 1% SP-1000 packed column.
- An integrator system that produces a gas chromatogram from the signal output of the GC
- Printer with paper and cable.
- Gas regulators designed for the specific compressed gas cylinders to be used. (CGA 350, 580, 590, 330, or others).
- Low flow measuring devise (i.e., bubble meter, Buck, etc.).

- Heated sample line (110°C) with calibration line.
- Heated probe (110°C).
- Two diaphragm pumps.

## 6.2 Reagents, Chemicals, and Gases

The following chemicals and gases are needed to assemble and operate the sampling system. Calibration gases must have their concentrations certified ±2% by their manufacturer:

- High Purity Support Gases for the GC system. (examples include nitrogen, helium, hydrogen, air, oxygen)
- Certified (±2% or better) compressed gas calibrations standards blended as follows:
  - Contain all components of interest (not necessarily in the same bottle).
  - Three concentrations for each component covering the expected source levels.
  - Balance air or nitrogen.
- With the appropriate approval from the state and federal agencies, supplies required to develop Tedlar Bag Standards for certain compounds where commercially available certified compressed gas calibrations standards can not be provided to TRC.

## 6.3 Sampling System Setup

Locate an area to set up the GC where there is a place to secure the gas cylinders and enough counter space to hold all the equipment.

- Install the column into the GC.
- Place the appropriate regulators on the support gas cylinders.
- Connect the gas lines from the GC to the appropriate gas cylinders.
- Turn on the cylinders and regulators. Check for leaks by applying a liquid (detergent in water, for example) at each joint. There should now be flow to the GC.

Connect the integrator to the GC with the communication cable.

- Plug in and turn on the GC and integrator.
- The GC should go thru a self test procedure.
- Ensure that there is communication between the GC and the integrator.
- Follow the manufacture directions if there is a failure of the GC or the integrator to ensure proper conditions before beginning any testing activities.

Next set the support gas flow rates.

- Insert the bubble meter into the detector outlet.
- The only flow through the detector is the flow thru the column.

- Adjust the flow rate with the column pressure valve until a rate the appropriate flow is achieved through the column.
- Next set the auxiliary flow rate (some of the GC do not have an auxiliary flow rate). Turn the auxiliary valve on and set the flow rate by changing the regulator for the auxiliary compressed gas.
- The fuel gas flow rates shall be adjusted in the same manner as stated above. Adjust any other flow rates for other support gases following the manufactures suggested flow settings.
- Adjustment to optimize the analyses of compounds will be completed during the initial calibrations of the instrument.
- Once flow rates are optimized they will be recorded and not to be changed until the testing is completed.
- In the event that the flow rates of a support gas must be changed due to unforeseen predicaments, a check of the calibration of the analyzer will be conducted immediately.

Ensure the detector is operational using the manufactures instructions.

- Once the GC is running it will take several hours for the GC to stabilize.
- It is recommended to cycle the oven temperature (heat and cool) to help purge and condition the column.
- It is recommended that the GC be setup and operating for a 12 hour period before commencing with any calibrations or testing.

Set up the sample probe, filter and line as shown in Figure 1.

- Run the heated sample line to the valve inlet tee.
- Ensure there is minimal distance between the tee and the heated valve.
- Insulate the tee and any exposed tubing between the tee and valve oven.
- Set the heaters to 110°C.
- The vent lines should be vented to a safe location away from people.

## 6.4 GC Method

The column flow rate and oven temperature program should be set to allow baseline separation of all components of interest from themselves and any other compounds present in the sample gas. This is often a trial and error process that can be helped along greatly by a selecting the proper column before starting.

- Prior to arriving at the job site, the GC system should be setup in a TRC laboratory to be optimized for the required analyses.
- It is recommended that the calibration standards arrive in enough time to allow analyses of them by the GC system to ensure there accuracy for the project.

Once the GC system has been optimized for the project all parameters that will be needed to duplicated the optimized conditions in the field will be recorded. If a computer-based integrator software is being used for the analyses, a project specific method will be created and used during the testing series.

## *6.5 Calibration*

Prior to testing, the GC is calibrated with three standards to generate a three-point curve for each compound of interest. Each standard is analyzed in triplicate or until three sequential injections agree to within 5% of their average. After completing a series of runs, the mid-level standard is analyzed again to assess changes in response factors.

### 6.5.1 Injecting Standards – Pre-Test Initial Calibration Curve

Once the GC has stabilized the standards can be injected into the GC and chromatograms generated. Connect the standard to the sample in line on top of the GC and purge the loop. Wait approximately one minute or till the sample loop is significantly purged to inject the sample on to the column. Once the sample is injected onto the column wait till the GC finishes the cycle. Continue injecting the standard until the area counts of three consecutive injections are with in 5% relative percent difference (RPD) of each other. Use the equation shown in Section 6.8.1 to calculate RPD. Attach the next standard and continue the injection procedure. Ensure that the standards and sample gas are treated and analyzed in the same manner.

### 6.5.2 Concentration vs. Area Count Calibration Curve

The calibration curve is a plot of concentration vs. area counts. For each compound a least-squares equation line is calculated from the three different calibration points generated in Section 6.5.1. This curve is calculated by the data acquisition program the GC computer. This curve is used to quantitize the peaks found in the samples.

Average the area counts for each compound of the three calibration standards analyzed in Section 6.5.1. Enter these averages and the corresponding concentrations into the appropriate section of the data acquisition program. Print the concentration vs. response graph and corresponding calibration information for each compound.

### 6.5.3 Recovery Study

Prior to sampling, perform the recovery study for at least one of the components of interest. Attach the mid-level calibration gas to the calibration line and flood the probe with the gas while running the sampling system in a normal manner. Using the procedures described in Section 6.6 below, analyze this standard until three consecutive injections are with in 5% RPD of each other. Compare the response of the standard to that obtained during the initial calibration using the equation shown in Section 6.8.2. The results are acceptable if the recovery is within ±10%.

## *6.6 Sample Analysis*

A daily calibration check must be completed in the morning prior to the first sample analysis of the day. For the calibration check specifications and criteria see Section 7.4 of this SOP. Start the sample bypass pump and allow the system to purge with sample for 5-10 minutes. With a vacuum source (sample loop pump or large syringe) connected to the sample out line, allow the sample loop to purge. After a significant purge time (approximately 1 minute) of the sample loop, inject the sample onto the GC in the same manner as the calibration standard, (under the same vacuum or pressure). It is required to inject all samples (calibrations and emission samples) using the same techniques to ensure that the emissions are calculated under identical conditions.

Following the injection of the sample gas, ensure that the sampling system is placed in purge mode to purge the sample loop with sample gas for the next injection. Once the GC cycle has completed its run, obtain the average area count for the emission gas reduced sulfur compounds and determine the concentrations using the calibration curves. Start the loop purge again (if not already running) and inject another sample onto the column. Continue this until at least five analyses per run have been completed. Document the area counts and injection file names in the spreadsheet.

The report will contain each individual chromatogram for the testing series. Each chromatogram will contain at a minimum the test run number, the area counts of the individual compounds, a pictorial of the analysis, name of client, date of analysis, technician's initials, identifications of sample gas (i.e. source name or standard name), and name of the compound of interest.

## 6.7 *Post-Test Calibration*

At the end of the test series (three runs), the mid-level calibration check is repeated again to bracket the data. Inject the standard until the area counts of three consecutive injections are with in 5% RPD of each other. For each compound, compare the averaged area counts with the averaged response obtained during the initial calibration. Using the equation shown in Section 6.8.3, calculate the post-test difference for the calibration. The post-test response for each component should agree with the initial calibration data to within ±5% of their mean value.

## 6.8 *Calculations*

### 6.8.1 Relative Percent Difference

$$RPD(\%) = \left(1 - \frac{AC_i}{AC_{avg}}\right) \times 100\%$$

Where:

| | | |
|---|---|---|
| RPD | = | Relative Percent Difference, (%). |
| $AC_i$ | = | Area Counts for individual injection. |
| $AC_{avg}$ | = | Average of area counts for all three injections. |

### 6.8.2 Percent Recovery

$$Recovery(\%) = -\left(1 - \frac{AC_{Recov}}{AC_{Direct}}\right) \times 100\%$$

Where:

| | | |
|---|---|---|
| *Recovery (%)* | = | Recovery study result for target compound, (%). |
| $AC_{Recov}$ | = | Average of area counts for target compound through entire system. |
| $AC_{Direct}$ | = | Average of area counts for target compound injected directly to GC. |

### 6.8.3 Post-Test Calibration Difference

$$Post\ Test\ (\%) = -\left(1 - \left(\frac{AC_{Post}}{\left(AC_{Pre} + AC_{Post}\right)/2}\right)\right) \times 100$$

Where:

| | | |
|---|---|---|
| *Post Test (%)* | = | Post-test calibration difference, (%). |
| $AC_{Post}$ | = | Average of area counts for target compound post-test response. |
| $AC_{Pre}$ | = | Average of area counts for target compound pre-test response. |

### 6.8.4 Minimum Detection Limit

$$MDL = 3.143 \times Std\ Dev\left(Inj_1, Inj_2 \ldots\ldots Inj_7\right)$$

Where:

| | | |
|---|---|---|
| *MDL* | = | Minimum detection limit, (ppmv). |
| *Std Dev* | = | Standard deviation, (ppmv). |
| $Inj_i$ | = | Calculated result of low-range calibration gas injection, (ppmv). |

## 6.9 *Method Options*

The sample loop pump can be replaced by a 100-ml gas-tight syringe provided that the operator can coordinate the loop purge and pre-injection sample pump shutoff properly.

# 7.0 QUALITY CONTROL PROCEDURES

All equipment used in the collection of samples and the analyzing of samples must have a current calibration. The actual number of quality control samples varies between sampling sites. The test protocol will have the actual number of samples required for the individual test sites.

The accuracy and completeness of spreadsheet IsoCalc.xls must be verified, approved for use by the Project Manager, and revisions controlled according to the procedures described in TRC SOP AM-005.

## 7.1 *Blanks*

Sources with very low levels of hydrocarbons may pose analysis problems if some part of the Method 18 system is contaminated. The following types of blanks may be useful in troubleshooting the GC analytical system:

- Loop injections of zero gas at the instrument.
- Analytical blanks (temperature ramp with no injection).
- Loop injection of zero gas run through entire sampling system.

Blanks are not required but may be necessary to monitor the performance of the sampling method and to provide the required information to take corrective action if contamination problems are observed in the laboratory operations or in the field sampling activities.

### 7.2 Minimum Detection Limit

The minimum detection limit (MDL), if applicable to the project data requirements, is determined by analyzing the low-level standard a minimum of 7 times on the GC. The MDL is estimated as 3.143 times the standard deviation of the seven replicate injections. A spreadsheet has been developed to calculate this value. Document the area counts and injection file names on the spreadsheet. The spreadsheet will calculate the actual MDL.

### 7.3 Post-Test Calibration Check

At the ending of each sample condition or run series, a calibration check must be conducted. This is done by injecting the mid calibration standard into the GC. The response factors for each component must agree with the initial calibration data to within ±5% of their mean value. Equation 6.8.3 is used to calculate this difference. If the daily calibration check meets this specification (≤ 5%), then the full calibration need not be repeated and the pre-test calibration curves may be used to calculate concentrations.

If the daily calibration check does not meet this specification, the full three-point calibration must be repeated and the average of the pre and post-test calibration curves are used to calculate concentrations. Reprint the sample chromatograms using the averaged calibration data and indicate in the sample description header that these are reprocessed using averaged calibration results.

### 7.4 Repeatable Results

All bag samples (audits, blanks, samples, etc.) will be injected at a minimum of three times or until the area counts of three consecutive injections are with in 5% RPD of each other. Document the area counts and injection file names on the spreadsheet. The spreadsheet will calculate the percent difference between the injections.

To ensure accuracy and appropriateness of use, the procedures described in TRC SOP AM-005 must be implemented (e.g., verification, Project Manager approval) with respect to all software and spreadsheets used in conjunction with this SOP.

## 8.0 TRAINING AND/OR QUALIFICATIONS

All persons performing this SOP must have an understanding of how a GC operates. TRC staff performing analyses described in this SOP should be knowledgeable of operating a GC and be able to troubleshoot items concerning the analyses of the hydrocarbon compounds. An understanding of the Chem Station software is also important. All persons working around hazardous chemical (including compressed gas cylinders) must have had training on handling these chemicals. The GC operator is recommended to have experience performing other GC analytical methods prior to performing this SOP. It is required that a person following this SOP for the first time to perform Method 18 analyses do so with supervision from an experienced Method 18 analyst.

## 9.0 FORMS, RECORDS, AND DOCUMENTATION

The required forms and spreadsheets for this SOP are:

- GC Sample Injection Log (Figure 2).
- Certification Sheets for all Standards.

- Method 18 GC Data Reduction spreadsheets.
- All data generated from this analytical method will be recorded and documented on spreadsheets.

The GC will print out chromatograms for each injection. These will be kept with the GC chemist during the testing. Once the testing is complete the data package and spreadsheets will be given to the field team leader for inclusion into the TRC project file. A copy of the data will be kept with the GC Chemist.

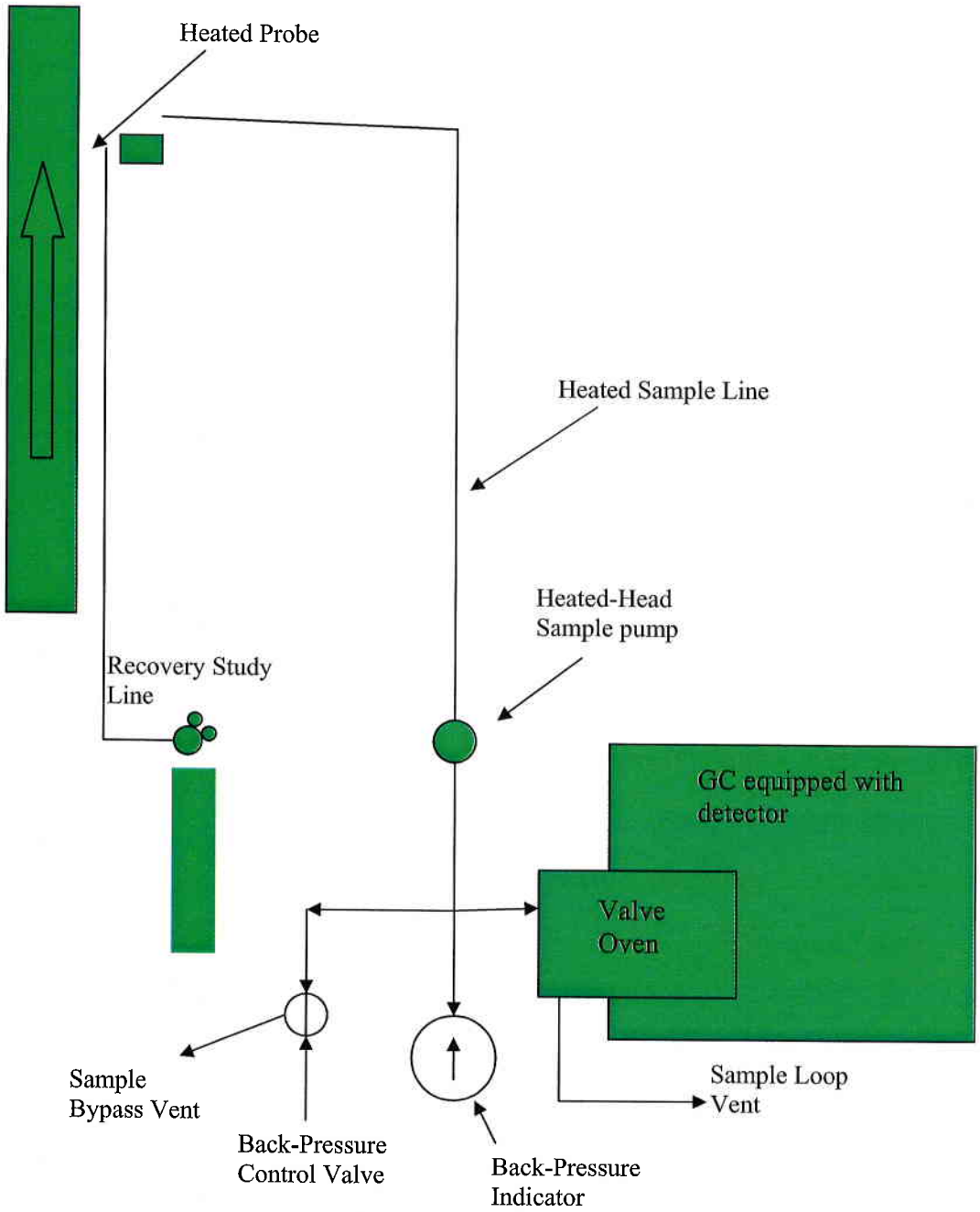


**Figure 1. Schematic of Method 18 Direct Interface Sampling**

TRC

SHEET ____ OF ____

| PROJECT: | | | |
|---|---|---|---|
| DATE: | OPERATOR: | | |
| NOTES: | | | |
| TIME | RUN NO. | DESCRIPTION | COMMENT |
| | | | |
| | | | |
| | | | |
| | | | |
| | | | |
| | | | |
| | | | |
| | | | |
| | | | |
| | | | |
| | | | |
| | | | |
| | | | |
| | | | |
| | | | |

Reviewed by (signature/date): _____

**Figure 2. Example GC Sample Injection Log**

# APPENDIX B2

# TRC Modified EPA Method 19

# Mass Emissions Calculations

The method presented in this appendix is the documentation provided by the TRC Company, which will be making the in situ flare flue gas pre-combustion and post-combustion methane, ethane and propane mass emissions calculations for the Comprehensive Flare Study Project.

The difference between the EPA Method 19 and the TRC Modified Method 19 is that the TRC Modified Method 19 is applicable to all TRC measurement programs using Method 19.

| Title: **Determination of Mass Flow and Mass Emission Rates Based on Fuel Flow and Fuel Analysis (40 CFR Part 60, Appendix A, Method 19)** | Procedure Number: **AM-219** |
|---|---|
| Supersedes: None | Revision Number: 00 |
| Reason for Revision: Not Applicable | Effective Date: 06/16/06 |

Authorization Signatures

| Author | Functional Area Manager | Quality Assurance |
|---|---|---|
| 20 Jun 06 | 6/21/06 | 6/26/06 |
| Date | Date | Date |

## 1.0 PURPOSE, SCOPE, AND APPLICABILITY

This procedure establishes standardized calculation procedures for the determination of mass flow and mass emission rates using fuel analyses and fuel flow to sources fired with natural gas and/or other fuels. This procedure will discuss calculation techniques and forms and spreadsheets used to document and process collected data.

This procedure details the implementation of the calculation method. This SOP does not instruct the user in measurement and/or sample collection procedures, or in the operation of the specific instrumentation used to collect the stack gas concentrations. The user is instructed to refer to each instrument's user manual for proper operation of the instrument and the applicable TRC SOPs for guidance on the collection and analysis of gaseous emissions.

This SOP is applicable to all TRC air measurements programs using 40 CFR Part 60, Appendix A, Methods 6C (TRC SOP AM-206C), 7E (AM-207E), 10 (AM-210C), 25A (AM-225A), and/or 25B (AM-225B) for the collection and analysis of stack gas for concentrations of gaseous pollutants. Pollutant emission rates are determined from the measured concentrations of $SO_2$, $NO_x$, CO, or THC, the diluent concentration ($O_2$ and/or $CO_2$) and with the ratios of combustion gas volumes to heat inputs.

The project-specific test plan must be consulted to verify test protocol details, the number of samples to collect, length of sampling periods, and QC samples required by the applicable state regulatory agency.

## 2.0 REFERENCES

US EPA Method 19 – Determination of Sulfur Dioxide Removal Efficiency and Particulate Matter, Sulfur Dioxide, and Nitrogen Oxide Emission Rates, *Standards of Performance for New Stationary Sources*, 40 CFR Part 60, Appendix A, Revised October 17, 2000.

TRC SOP AM-005: *Air Measurements Business Unit Software Control*

TRC SOP AM-006: *Air Measurements Data Review and Validation*

TRC SOP AM-008: *Air Measurements Technical Review and Deliverable Approval*

TRC SOP AM-203A: *Determination of Oxygen and Carbon Dioxide Emissions from Stationary Sources - Instrumental Analyzer Procedure*

TRC SOP AM AM-206C: *Determination of Sulfur Dioxide Emission from Stationary Sources – Instrumental Analyzer Procedure*

TRC SOP AM-207E: *Determination of Nitrogen Oxides Emission from Stationary Sources – Instrumental Analyzer Procedure*

TRC SOP AM-210C: *Determination of Carbon Monoxide Concentrations in Emissions from Stationary Sources – Continuous Sampling*

TRC SOP AM-225A: *Determination of Total Gaseous Organic Concentration Using a Flame Ionization Analyzer*

## 3.0 DEFINITIONS

**CEM** – Continuous Emissions Monitoring

**F-Factor** – The ratio of the gas volume of the products of combustion to the heat content of the fuel.

- The dry F-Factor ($F_D$) includes all components of combustion less water.
- The wet F-factor ($F_W$) includes all components of combustion.
- The carbon F-factor ($F_C$) includes only carbon dioxide.

**Heat Input** – Quantity of heat delivered to the combustion source. The heat input is expressed as MMBtu/SCF or J/scm.

**Heating Value** – Value assigned to the fuel from component analyses.

**Shall/Must/Will** – Words used to indicate mandatory requirements that must be met.

**Should/May** – Words used to denote a recommended practice.

## 4.0 SUMMARY OF RESPONSIBILITIES

Functional Area Managers (e.g., National Practice Director, Operations Manager, Project Manager) are responsible for ensuring implementation of the SOP.

Quality Assurance personnel are responsible for:

- Review and approval of the SOP.
- Auditing, at the direction of a Functional Area Manager, to verify implementation of the SOP.

TRC Air Measurements staff members are responsible for performing assigned tasks in accordance to this SOP.

TRC field staff members are responsible for:

- Sampling/Analyses – The CEM Technician (per the applicable test method SOP).
- Calculation of mass flow and mass emission rates are completed on site by the field team leader. These calculations are verified in the office after results of analyses of all fuel samples collected for a specific project are completed (i.e., at a minimum, during peer review). The field team leader shall include an example of calculations in the appendices of any report in which a value based on this SOP is presented.
- Peer review of results generated using this SOP shall be completed in a manner consistent with the standard practices of TRC Air Measurements (TRC SOPs AM-006 and AM-008).

## 5.0 SAFETY CONSIDERATIONS

Safety considerations are not typically associated with calculating emission rates. However, with respect to the collection of generating the measured concentrations or other field data, the field team leader, project manager, or the National Health and Safety Director can address any questions or safety concerns. The following must be considered by all staff performing emissions testing:

- When working with or around chemicals proper personal protection equipment (PPE) should be worn. Always read the MSDS for the chemicals that you are working with or may encounter while implementing these procedures.
- Sampling can be conducted at heights and fall protection may be required to access the sample location.

## 6.0 PROCEDURE

Concentrations of gaseous pollutants are determined using TRC Air Measurements SOPs as referenced in Section 2.0. A sample of the fuel is collected and analyzed to determine the heating value. Data from a verified process control parameter that can be identified as a direct measure of heat input to the source being tested is obtained with the assistance of the source owner/operator. Mass emission rates of a pollutant are then calculated based on the measured concentration, the heat input to the combustion source, and the appropriate F-Factor. Note that a table of average F-Factors is provided in EPA Reference Method 19; these values may be used when a fuel analysis is not available, or in cases where dictated by regulation (e.g., $NO_x$-diluent monitor certification detailed in 40 CFR Part 75).

## 6.1 Pre-test Preparation

Calculation spreadsheets should be verified and validated per TRC SOP AM-005. An example printout from a calculation spreadsheet is shown in Figure 1.

## 6.2 Calculations

The SOP is for the calculation of mass emissions. Use the following conversion factors and tables to determine the appropriate equation for the source being tested.

### 6.2.1 Conversion Factors for Pollutant Concentration

Conversion from units of volume (e.g., parts per million) must be made to units of weight (e.g., pounds per hour). This conversion is made on a molar equivalency basis. The following equation is utilized to determine a conversion factor:

$$K3 = \frac{MWc}{K} \times K1$$

| | | |
|---|---|---|
| *MWc* | = | Mole weight of pollutant |
| *K* | = | Ideal gas constant, English units = 385.3 lbs/lb-mole |
| *K1* | = | Conversion from parts per million = 1E-06 (can be expressed as 0.000001) |
| *K3* | = | Conversion factor, pollutant |

***$NO_x$ Conversion Factor (ppm to lb/scf)***

$$K3_{NOx} = \frac{46.01}{385.3} \times 0.000001 = 1.194E-07$$

$$K3_{NOx} = 1.194E-07$$

***$SO_2$ Conversion Factor (ppm to lb/scf)***

$$K3_{SO2} = \frac{64.06}{385.3} \times 0.000001 = 1.661E-07$$

$$K3_{SO2} = 1.661E-07$$

***CO Conversion Factor (ppm to lb/scf)***

$$K3_{CO} = \frac{28.01}{385.3} \times 0.000001 = 7.269E-08$$

$$K3_{CO} = 7.269E-08$$

***THC (as methane) Conversion Factor (ppm to lb/scf)***

$$K3_{THC} = \frac{16.04}{385.3} \times 0.000001 = 4.165E-08$$

$$K3_{THC} = 4.165E-08$$

### 6.2.2 F-Factor Calculation (Dry Basis)

Published F-factors for various fuels are listed in Table 1 of this SOP. These values may also be found in 40 CFR Part 60, Appendix A, Method 19, Table 19-1. Custom F-factors may be calculated using the following equation (also found in 40 CFR Part 60, Appendix A, Method 19, Equation 19-13). This equation calculates $F_d$, the dry basis F-Factor.

$$F_d = \frac{K \times \left[(K_{hd} \times \%H) + (K_c \times \%C) + (K_n \times \%N) + (K_s \times \%S) - (K_o \times \%O)\right]}{GHV}$$

| | | |
|---|---|---|
| $F_d$ | = | F-Factor, dry basis |
| $K$ | = | Conversion factor, 10E+06 |
| $K_{hd}$ | = | 3.64 scf/lb Hydrogen |
| $K_c$ | = | 1.53 scf/lb Carbon |
| $K_n$ | = | 0.14 scf/lb Nitrogen |
| $K_s$ | = | 0.57 scf/lb Sulfur |
| $K_o$ | = | 0.46 scf/lb Oxygen |
| *%H, %C, %N, %S, %O* | = | Concentration in fuel sample from ultimate analysis, weight percent |
| *GHV* | = | Gross Heating Value of fuel from ultimate analysis |

### 6.2.3 F-Factor Calculation for Multiple Fuels

Certain sources may utilize more than one type of fuel as a normal operating scenario. In this case, calculate an F-Factor (or utilize the published F-Factor found in Table 1) for each fuel type. Use the heat input ratio for each fuel to the unit as the ratio for these F-Factors.

## Table 1. F-Factors for Various Fuels

| Fuel Type | $F_d$ | | $F_w$ | | $F_c$ | |
|---|---|---|---|---|---|---|
| | dscm/J | dscf/MMBtu | wscm/J | wscf/MMBtu | scm/J | scf/MMBtu |
| Coal | | | | | | |
| Anthracite | $2.71 \times 10^{-7}$ | 10,100 | $2.83 \times 10^{-7}$ | 10,540 | $0.530 \times 10^{-7}$ | 1,970 |
| Bituminous | $2.63 \times 10^{-7}$ | 9,780 | $2.86 \times 10^{-7}$ | 10,640 | $0.484 \times 10^{-7}$ | 1,800 |
| Lignite | 2.65x10-7 | 9,860 | 3.21x10-7 | 11,950 | $0.513 \times 10^{-7}$ | 1,910 |
| Oil | $2.47 \times 10^{-7}$ | 9,190 | $2.77 \times 10^{-7}$ | 10,320 | $0.383 \times 10^{-7}$ | 1,420 |
| Gas | | | | | | |
| Natural | $2.43 \times 10^{-7}$ | 8,710 | $2.85 \times 10^{-7}$ | 10,610 | $0.287 \times 10^{-7}$ | 1,040 |
| Propane | $2.34 \times 10^{-7}$ | 8,710 | $2.74 \times 10^{-7}$ | 10,200 | $0.321 \times 10^{-7}$ | 1,190 |
| Butane | $2.34 \times 10^{-7}$ | 8,710 | $2.79 \times 10^{-7}$ | 10,390 | $0.3370 \times 10^{-7}$ | 1,250 |
| Wood | $2.48 \times 10^{-7}$ | 9,240 | --- | --- | $0.492 \times 10^{-7}$ | 1,830 |
| Wood Bark | $2.58 \times 10^{-7}$ | 9,600 | --- | --- | $0.516 \times 10^{-7}$ | 1,920 |
| Municipal Solid Waste | $2.57 \times 10^{-7}$ | 9,570 | --- | --- | $0.488 \times 10^{-7}$ | 1,820 |

### 6.2.4 Calculation of Mass Flow

Mass flow is calculated using data from process data instrumentation that provides verified documentation of heat input to a source, measured exhaust oxygen content, and the F-Factor as described in Section 6.2. A typical process parameter is fuel flow, expressed as a unit of weight OR a unit of volume per unit of time (i.e., pounds per second OR standard cubic feet per hour). Gross heating value (GHV) must be expressed in the same units and on the same moisture basis as the process parameter.

***Calculation of Heat Input***

$$HI = \left[ (\sum Q_f) \times GHV \right]$$

| | | |
|---|---|---|
| $HI$ | = | Heat input (MMBtu/hr) |
| $\Sigma Q_f$ | = | Sum of all fuel flow (SCFH, lbs/hr) |
| $GHV$ | = | Gross (high) heating value (Btu/scf, Btu/lb) |

***Calculation of Mass Flow***

$$Q_s = I_h \times F_d \times \frac{20.9}{20.9 - C_{O2}}$$

| | | |
|---|---|---|
| Qs | = | Dry stack flow rate, standard conditions (DSCF/hr) |
| $F_d$ | = | F-Factor, dry basis (oxygen-based) (DSCF/MMBtu) |
| $C_{O2}$ | = | Concentration of oxygen, exhaust (%) |
| 20.9 | = | concentration of oxygen in ambient air (%) |

### 6.2.5 Calculation of Mass Emissions (lbs/MMBtu) using Dry Basis $O_2$ F-Factor

$$E = (C_p \times K3) \times F_d \times \frac{20.9}{20.9 - C_{O2}}$$

| | | |
|---|---|---|
| $C_{O2}$ | = | Measured concentration of oxygen in stack exhaust (%) |
| $C_p$ | = | Concentration of pollutant (ppm) |
| $E$ | = | Mass emission of component, (lbs/MMBtu) |
| $F_d$ | = | F-Factor, dry basis |
| $K3$ | = | Conversion factor, pollutant |
| 20.9 | = | Concentration of oxygen in ambient air (%, percent) |

### 6.2.6 Calculation of Mass Emissions (lbs/hr)

$$E = C_p \times K1 \times \frac{MWc}{K} \times Q_s$$

or

$$E = C_p \times K3 \times Q_s$$

| | | |
|---|---|---|
| $C_p$ | = | Concentration of pollutant (ppm) |
| $E$ | = | Mass emission of component (lbs/hr) |
| $K$ | = | Ideal gas constant, English units = 385.3 lbs/lb-mole |
| $K1$ | = | Conversion from parts per million= 1E-06 (can be expressed as 0.000001) |
| $K3$ | = | Conversion Factor, pollutant (see Section 6.2.1) |
| $MWc$ | = | Mole weight of pollutant |
| $Q_s$ | = | Dry stack flow rate, standard conditions, (DSCF/hr) |

## 7.0 QUALITY CONTROL PROCEDURES

All calculations, data entered into spreadsheets, field data sheets, and/or lab notebook entries will be reviewed peer or supervisor (e.g., reviewed by another member of the project team, reviewed by peer or supervisor not working on the project) to ensure accuracy and completeness. In each case, the reviewer must be qualified to perform the task that is reviewed and will sign (or initial) and date each page to indicate completion of the review and concurrence with the content.

The accuracy and completeness of spreadsheets used for the activities described in this SOP will be verified, approved for use by the Project Manager, and revisions controlled according to the procedures described in TRC SOP AM-005.

A backup copy of all electronic data files (e.g., spreadsheets containing project data) should be made prior to leaving the on-site testing location.

## 8.0 TRAINING AND/OR QUALIFICATIONS

All persons performing Method 19 mass flow and mass emission rate calculations must have read this SOP and have an understanding of the contents. It is required that a person performing Method 19 calculations for the first time does so with supervision from an individual with previous experience in mass flow and mass emission rate calculations based on fuel flow and fuel analyses. Appendix A includes training materials on the use of EPA Method 19 dimensional equations.

## 9.0 FORMS, RECORDS, AND DOCUMENTATION

The required forms for this SOP are:

- A log of start and stop times should be created during the testing program; and
- Calibration sheets for the equipment used during the operation of the sampling system.

For this SOP, all records and data are electronically generated. As described in SOP AM-005, a copy of the approved data file should be placed in TRC office files prior to leaving for the field. The required spreadsheets for this SOP are:

- Excel spreadsheet (or equivalent spreadsheet which includes calculation records).

A copy of the facility data showing that the equipment being tested is in operation during the testing periods is also required.

All the facility data records, data sheets, forms, spreadsheets, and other data files (once completely filled out) must be given to the field team leader for insertion into the TRC project files.

**Gas Fuel F Factor & Heating Value Calculation**

**Client** (Example)
**Sample ID**
**Time**
**Date**

***CALCULATION OF DENSITY AND HEATING VALUE @ 68°F and 29.92 in Hg***

| Component | | Molecular Wt. | Density (lb/ft3) | % volume x Density | weight % | Component Gross Btu/lb | Weight Fract. Btu | Gross Heating Value (Btu/SCF) | Volume Fract. Btu |
|---|---|---|---|---|---|---|---|---|---|
| Hydrogen | | 2.016 | 0.0052 | 0.00000 | 0.0000 | 61100 | 0.00 | 319.2 | 0 |
| Oxygen | | 32.000 | 0.0831 | 0.00000 | 0.0000 | 0 | 0.00 | 0.0 | 0 |
| Nitrogen | 0.6061 | 28.016 | 0.0731 | 0.00044 | 0.9993 | 0 | 0.00 | 0.0 | 0 |
| CO2 | 0.9967 | 44.010 | 0.1149 | 0.00115 | 2.5840 | 0 | 0.00 | 0.0 | 0 |
| CO | | 28.010 | 0.0727 | 0.00000 | 0.0000 | 4347 | 0.00 | 316.3 | 0 |
| Methane | 94.9437 | 16.041 | 0.0417 | 0.03954 | 89.2107 | 23879 | 21302.63 | 995.0 | 944.689815 |
| Ethane | 2.6325 | 30.067 | 0.0789 | 0.00208 | 4.6840 | 22320 | 1045.47 | 1760.0 | 46.332 |
| Ethylene | | 28.051 | 0.0733 | 0.00000 | 0.0000 | 21644 | 0.00 | 1585.3 | 0 |
| Propane | 0.5094 | 44.092 | 0.1175 | 0.00060 | 1.3500 | 21661 | 292.42 | 2544.0 | 12.959136 |
| propylene | | 42.077 | 0.1090 | 0.00000 | 0.0000 | 21041 | 0.00 | 2294.5 | 0 |
| Isobutane | 0.1042 | 58.118 | 0.1554 | 0.00016 | 0.3653 | 21308 | 77.83 | 3303.2 | 3.4419344 |
| n-butane | 0.1157 | 58.118 | 0.1554 | 0.00018 | 0.4056 | 21257 | 86.22 | 3310.1 | 3.8297857 |
| Isobutene | | 56.102 | 0.1454 | 0.00000 | 0.0000 | 20840 | 0.00 | 3013.5 | 0 |
| Isopentane | 0.0404 | 72.144 | 0.1870 | 0.00008 | 0.1705 | 21091 | 35.95 | 3936.7 | 1.5904268 |
| n-pentane | 0.0265 | 72.144 | 0.1870 | 0.00005 | 0.1118 | 21052 | 23.54 | 3944.6 | 1.045319 |
| hexanes+ | 0.0236 | 86.169 | 0.2234 | 0.00005 | 0.1189 | 20940 | 24.90 | 4677.3 | 1.1038428 |
| H2S | | 34.076 | 0.0895 | 0.00000 | 0.0000 | 7100 | 0.00 | 635.5 | 0 |
| Average Molecular Wt: | | 17.051 | | | | | | | |
| total | 100.00 | Average Density | | 0.04433 | 100.0000 | Gross Heating Value | | Gross Heating Value | |
| | | Specific Gravity | | 0.57943 | | Btu/lb | 22889 | Btu/SCF | 1015 |

***CALCULATION OF F FACTORS***

| Component | Mol. Wt. | C Factor | H Factor | % volume | Fract. Wt. | Weight Percents Carbon | Hydrogen | Nitrogen | Oxygen |
|---|---|---|---|---|---|---|---|---|---|
| Hydrogen | 2.016 | 0 | 1 | 0.00 | 0.0000 | | 0 | | |
| Oxygen | 32.000 | 0 | 0 | 0.00 | 0.0000 | | | | 0 |
| Nitrogen | 28.016 | 0 | 0 | 0.61 | 16.9805 | | | 0.99587153 | |
| CO2 | 44.010 | 0.272273 | 0 | 1.00 | 43.8648 | 0.70044382 | | | 1.87026498 |
| CO | 28.010 | 0.42587 | 0 | 0.00 | 0.0000 | 0 | | | 0 |
| Methane | 16.041 | 0.75 | 0.25 | 94.94 | 1522.9919 | 66.9902747 | 22.3300916 | | |
| Ethane | 30.067 | 0.8 | 0.2 | 2.63 | 79.1514 | 3.71365341 | 0.92841335 | | |
| Ethylene | 28.051 | 0.85714 | 0.14286 | 0.00 | 0.0000 | 0 | 0 | | |
| Propane | 44.092 | 0.81818 | 0.181818 | 0.51 | 22.4605 | 1.07775613 | 0.23950166 | | |
| Propene | 42.077 | 0.85714 | 0.14286 | 0.00 | 0.0000 | 0 | 0 | | |
| Isobutane | 58.118 | 0.82759 | 0.17247 | 0.10 | 6.0559 | 0.29393176 | 0.06125547 | | |
| n-butane | 58.118 | 0.82759 | 0.17247 | 0.12 | 6.7243 | 0.32637145 | 0.06801591 | | |
| Isobutene | 56.102 | 0.85714 | 0.14286 | 0.00 | 0.0000 | 0 | 0 | | |
| Isopentane | 72.144 | 0.83333 | 0.16667 | 0.04 | 2.9146 | 0.14244641 | 0.02848997 | | |
| n-pentane | 72.144 | 0.83333 | 0.16667 | 0.03 | 1.9118 | 0.09343638 | 0.01868772 | | |
| n-hexane | 86.169 | 0.83721 | 0.16279 | 0.02 | 2.0336 | 0.09985053 | 0.01941528 | | |
| H2S | 34.076 | 0 | 0.05869233 | 0.00 | 0.0000 | 0 | 0 | | |
| Totals | | | | 99.99880 | 1705.0892 | 73.4381646 | 23.69 | 0.99587153 | 1.87026498 |

| *CALCULATED VALUES* | | |
|---|---|---|
| O2 F Factor (dry) | 8645 | DSCF of Exhaust/MM Btu of Fuel Burned @ 0% excess air |
| O2 F Factor (wet) | 10643 | SCF of Exhaust/MM Btu of Fuel Burned @ 0% excess air |
| Moisture F Factor | 1998 | SCF of Water/MM Btu of Fuel Burned @ 0% excess air |
| Combust. Moisture | 18.8 | volume % water in flue gas @ 0% excess air |
| CO2 F Factor | 1030 | DSCF of CO2/MM Btu of Fuel Burned @ 0% excess air |
| Fuel VOC % (non-C1) | 7.42% | |
| Fuel VOC % (non-C1,C2) | 2.61% | |

**Figure 1. Example Calculation Spreadsheet Printout**

# APPENDIX A

## The Use of Dimensional Equations from EPA Method 19

# *USE OF DIMENSIONAL EQUATIONS DERIVED FROM EPA METHOD 19*

*Permit Limits and Emission Standards*

Let's say you have a soda straw that contains lots of water and a little bit of whiskey…to make it easy on me, 90% water and 10% whiskey. And…you have a railroad tank car. It contains 90,000 gallons of water, and 10,000 gallons of whiskey. The concentrations are the same; but the effects of drinking the contents of both will be significantly different. That's the same logic that drives the limits expressed for the sources we test; if the exhaust NOx concentration from a 4" diameter stack on a small process contains 25 ppm NOx and the exhaust from a power turbine that has a 240" diameter stack with the exhaust heading to the sky at 6.5E+08 standard cubic feet per hour contains 25 ppm NOx, establishing a permit limit for NOx as a concentration doesn't do much good. So, limits are most often expressed in terms of a rate: lbs of NOx per MMBtu, or pounds per hour, tons per year, even grams per horsepower-hour on reciprocating engines. Even permits that do have limits expressed as concentrations have done so by back-calculating it based on a total weight of NOx put into our breathing air. It's the RATE of NOx, not the VOLUME of NOx that is the concern.

*Pardon the Digression...*

Concentrations of pollutants are typically expressed in fractional volume units; that is, when we say that the exhaust NOx concentration from a source is 25 ppm, we are saying that of the total volume of exhaust (100% of the exhaust) 0.0025% of that whole is NOx. We could also express it as a fraction: 25/1000000 or "twenty-five one millionths". Both of those are valid, but are difficult to work with. Parts per million is much more convenient. Now, if we wanted to get rid of that percent thing, we could use **adimensional equation** to cancel out some units...If 1% of 1 is equivalent to 1 in 100%, we can express that as:

$$\frac{1\% \quad 1}{1 \quad 100\%}$$

Top of the equation is considered positive (+)

Bottom of the equation is considered negative (-)

NOW…lets cancel out matching units and multiply opposite signs...

$$\frac{1}{100}$$

**OR**

**1 x 1.00E-02**

**Of course, the result of the equation is 0.01. Same as one percent, where we started. Genius, eh?**

*French Physics peaked in 1850 and more digression...*

We're expressing NOx as parts per million, but the permit limit is expressed in pounds per hour. So…we've got to translate our unit of volume measurement into a weight per unit of time. That's where the beauty of Method 19 becomes apparent: it is the Rosetta Stone for dimensional equations in air measurement. The dimensional equation is the foundation of 99% of all tests we do. That ideal gas constant number-385.15 - is wonderful. But 385.15 whats??? Well...in 1787 French physicist Jacques Charles derived from experiments that the volume of gas under constant pressure increases or decreases with temperature. He was right, and that became known as Charles' Law. About 30 years later, Joseph Gay-Lussac refined the law by experimentally proving that thermal expansion of a gas was about 1/267th of its original volume per degree Celsius. Then in 1847 another French physicist, Henri Regnault, refined this value to 1/273, and discovered that most gases don't obey Charles' Law. In principle, only IDEAL gases comply with the law. From there, this ideal gas constant is the "R" in Boyle's Law, which is expressed as PV=nRT, with P=pressure, V=volume, n=number of moles of the gas, and T= temperature. The constant is a function of Avogadro's number, and I'm already in over my head. For me, the ideal gas constant, 385.15 for English units, could also be called the universal molar equivalency constant: it works as moles per pound mole; moles per standard cubic foot; moles per Btu; even moles per hackberry bush, I suppose. But let's focus on moles of ideal gas per pound mole of ideal gas. And that top number in the conversion fraction...46.06...that's the *molecular weight* of NOx! That means we can cancel out some units and get closer to that rate we want!

**Using the same colors and +/- scenario as above, let's look at…**

$$\frac{\text{a single ppm}}{1} \;\Big|\; \frac{\text{MW, lbs / lb-mole}}{\text{Ideal gas constant (lbs-mole / lb)}} \;\Big|\; \frac{1}{1E+06}$$

1 cancels 1, lbs /lb mole cancels lbs-mole/lb (remember, opposite signs) and we are left with:

$$\frac{\text{lbs}}{\text{lb}} \times 1E\text{-}06 \quad \text{OR} \quad \frac{\text{MW}}{\text{Ideal gas constant}} \times 1E\text{-}06$$

A WEIGHT OF POLLUTANT!
FOR NOx,

$$\frac{46}{385.15} \times 1E\text{-}06 = \textit{1.194E-07}$$

*MOVING FORWARD…FINALLY…*

***WHAT WE HAVE:*** NOx in PPMV

***WHAT WE WANT:*** NOx in lbs/MMBtu

| | | | | |
|---|---|---|---|---|
| $C_{NOx}$ | = | exhaust NOx concentration, ppmvd | 25.00 | |
| $C_{O2}$ | = | exhaust O2 concentration, % | 13.50 | |
| $F_{O2}$ | = | $O_2$ F-Factor, DSCF exhaust/MMBtu | 8710 | **published value** |
| K1 | = | NOx conversion factor from Meth. 19 | 1.194E-07 | (40CFR60, Method 19) |

$$E''X''MMBtu = C''X'' \times K''X'' \times F_{O2} \times \frac{20.9}{20.9 - C_{O2}}$$

$$E_{NOx}MMBtu = 25.00 \times 1.194E\text{-}07 \times 8710 \times \frac{20.9}{20.9 - 13.50}$$

F-factors are **ALWAYS** expressed at 0% excess oxygen, the last term in the equation corrects what we measured to the same basis.

$$\mathbf{E_{NOx}MMBtu} = \mathbf{0.0275} \quad \mathbf{lbs/MMBtu}$$

***MASS EMISSIONS ARE A FUNCTION OF CONCENTRATION AND FLOW***
***LOW CONCENTRATION X HIGH FLOW = HIGH CONCENTRATION X LOW FLOW***

***WHAT WE HAVE:*** NOx in PPMV

***WHAT WE WANT:*** NOx in lbs/hr

***WHAT WE NEED:*** A way to calculate mass flow in units of weight or volume per hour

*How Much Exhaust is Travelling out the Stack?*

That's the bottom line: how much NOx is emitted to the atmosphere? We know the concentration, but to calculate the RATE we must know stack gas velocity. EPA Methods 1-4 provide a methodology to measure this physically; it can be calculated stoichiometrically as well. A process parameter is required from the client: almost every unit has a measure of fue flow in. If we know what the fuel is composed of, and how much of it goes to the unit over a period of time, we can calculate the exhaust flow using a dimensional equation.

**EXAMPLE:**

What are the NOx mass emissions from a power plant turbine and duct burners?

1. What is the fuel composed of, and what is it's heating value?
   This is a published equation (19-13) from EPA Method 19:

| | | | |
|---|---|---|---|
| K | = | Conversion Factor = | 10^6 or $10^6$ |
| KHD | = | 3.64 | SCF/lb of Hydrogen |
| % H | = | 23.58 | (from analyses) |
| KC | = | 1.53 | SCF/lb of Carbon |
| %C | = | 71.84 | (from analyses) |
| Ks | = | 0.57 | SCF/lb of Sulfur |
| %S | = | 0 | (from analyses) |
| KN | = | 0.14 | SCF/lb of Nitrogen |
| %N | = | 3.34 | (from analyses) |
| KO | = | 0.46 | SCF/lb of Oxygen |
| %O | = | 1.24 | (from analyses) |
| GHV | = | 22619 | Gross heating value (Btu/lb) of fuel |

$O_2$ F-Factor = dry standard cubic feet (DSCF) of exhaust products produced per million Btu (MMBtu) of fuel burned at 0% excess air

$$O_2 \text{ F-Factor} = \frac{K \times \{[KHD \times \%H] + [KC \times \%C] + [KN \times \%N] - [KO \times \%O]\}}{GHV}$$

$$O_2 \text{ F-Factor} = 8649 \quad \frac{\text{DSCF Exhaust}}{\text{MMBtu Fuel Combusted}}$$

*****$O_2$ F-FACTORS ARE ALWAYS EXPRESSED AT 0% EXCESS $O_2$ IN THE EXHAUST!!**

Based on this composition, the heating value of this fuel using the standard calculation template is 982 Btu/scf.

***WHAT WE HAVE:*** A unit that will enable us to translate how much fuel is used to how much exhaust the unit produces!

2. The turbine and duct burner use 2648.9 standard cubic feet per hour of fuel. Calculate the net heat input to the turbine and duct burner

   Make the basis the same: get fuel flow and heating value in the same units

   2648.9 X 1000= 2648900 cubic feet of fuel per hour

   Mutliply by the heating value: 982

   **Net Heat Input:** 2601219800 Btu/hr

   That's too big a number to be workable; so, let's go to million Btu/hr (ABBREVIATED MMBtu)

   **Net Heat Input (HI):** 2601.2198 MMBtu/hr

3. Calculate the exhaust flow:

| | | | | |
|---|---|---|---|---|
| HI | = | total heat input, MMBtu/hr | = | 2601.22 |
| Fd | = | $O_2$ F-Factor, DSCF exhaust/MMBtu | = | 8649 |
| CO2 | = | exhaust $O_2$ concentration, % | = | 11.22 |
| QS | = | dry stack flow rate, standard conditions, DSCF/hr | | |

$$= IH \times Fd \times \frac{20.9}{20.9 - CO2}$$

QS = 4.86E+07 DSCF/hr

This expression corrects the stack to 0% $O_2$

***WHAT WE HAVE:*** NOx in ppm
Stack flow in DSCF/hr

***WHAT WE WANT:*** NOx in lbs/hr

| | | | | |
|---|---|---|---|---|
| CNOx | = | exhaust NOx concentration, ppmvd | = | 25 |
| QS | = | stack flow rate, DSCF/hr | = | 4.86E+07 |
| K | = | NOx factor from above | = | 1.194E-07 |

Emission rates are expressed as "Esub" as concentrations are expressed as "Csub"
ENOx is a NOx emission rate; clarify with units

$E_{NOXlbs/hr}$ = CNOx x K x QS

= 25 x 1.194E-07 x 4.86E+07

$\mathbf{E_{NOXlbs/hr}}$ = **145.06 lbs/hr**

# APPENDIX B3

# Heating Value Calculations

The spreadsheet presented in this appendix is the documentation provided by the TRC Company, which will be making the in situ flare flue gas pre-combustion and post-combustion methane, ethane and propylene lower heating value calculations for the Comprehensive Flare Study Project.

# Gas Fuel "F Factor" & Heating Value Calculation

**Company:** _____
**Sample ID:** _____
**Time:** _____
**Date:** _____
**Cylinder #** _____

***CALCULATION OF DENSITY AND HEATING VALUE @ 60°F and 30 in Hg***

| Component | % Volume | Molecular Wt. | Density (lb/ft3) | % volume x Density | weight % | Component Gross Btu/lb | Weight Fract. Btu | Gross Heating Value (Btu/SCF) | Volume Fract. Btu |
|---|---|---|---|---|---|---|---|---|---|
| Hydrogen | | 2.016 | 0.0053 | 0.00000 | #DIV/0! | 61100 | #DIV/0! | 325.0 | 0 |
| Oxygen | | 32.000 | 0.0846 | 0.00000 | #DIV/0! | 0 | #DIV/0! | 0.0 | 0 |
| Nitrogen | | 28.016 | 0.0744 | 0.00000 | #DIV/0! | 0 | #DIV/0! | 0.0 | 0 |
| CO2 | | 44.010 | 0.1170 | 0.00000 | #DIV/0! | 0 | #DIV/0! | 0.0 | 0 |
| CO | | 28.010 | 0.0740 | 0.00000 | #DIV/0! | 4347 | #DIV/0! | 322.0 | 0 |
| Methane | | 16.041 | 0.0424 | 0.00000 | #DIV/0! | 23879 | #DIV/0! | 1013.0 | 0 |
| Ethane | | 30.067 | 0.0803 | 0.00000 | #DIV/0! | 22320 | #DIV/0! | 1792.0 | 0 |
| Ethylene | | 28.051 | 0.0746 | 0.00000 | #DIV/0! | 21644 | #DIV/0! | 1614.0 | 0 |
| Propane | | 44.092 | 0.1196 | 0.00000 | #DIV/0! | 21661 | #DIV/0! | 2590.0 | 0 |
| propylene | | 42.077 | 0.1110 | 0.00000 | #DIV/0! | 21041 | #DIV/0! | 2336.0 | 0 |
| Isobutane | | 58.118 | 0.1582 | 0.00000 | #DIV/0! | 21308 | #DIV/0! | 3363.0 | 0 |
| n-butane | | 58.118 | 0.1582 | 0.00000 | #DIV/0! | 21257 | #DIV/0! | 3370.0 | 0 |
| Isobutene | | 56.102 | 0.1480 | 0.00000 | #DIV/0! | 20840 | #DIV/0! | 3068.0 | 0 |
| Isopentane | | 72.144 | 0.1904 | 0.00000 | #DIV/0! | 21091 | #DIV/0! | 4008.0 | 0 |
| n-pentane | | 72.144 | 0.1904 | 0.00000 | #DIV/0! | 21052 | #DIV/0! | 4016.0 | 0 |
| n-hexane | | 86.169 | 0.2274 | 0.00000 | #DIV/0! | 20940 | #DIV/0! | 4762.0 | 0 |
| H2S | | 34.076 | 0.0911 | 0.00000 | #DIV/0! | 7100 | #DIV/0! | 647.0 | 0 |
| **Total** | 0.00 | Average Density = | | 0.00000 | #DIV/0! | **Gross Heating Value** | | **Gross Heating Value** | |
| | | Specific Gravity = | | 0.00000 | | **Btu/lb =** | **#DIV/0!** | **Btu/SCF =** | **0** |

***CALCULATION OF F FACTORS***

| Component | Mol. Wt. | C Factor | H Factor | % volume | Fract. Wt. | Weight Percents: Carbon | Hydrogen | Nitrogen | Oxygen |
|---|---|---|---|---|---|---|---|---|---|
| Hydrogen | 2.016 | 0 | 1 | 0.00 | 0.0000 | | #DIV/0! | | |
| Oxygen | 32.000 | 0 | 0 | 0.00 | 0.0000 | | | | #DIV/0! |
| Nitrogen | 28.016 | 0 | 0 | 0.00 | 0.0000 | | | #DIV/0! | |
| CO2 | 44.010 | 0.2723 | 0 | 0.00 | 0.0000 | #DIV/0! | | | #DIV/0! |
| CO | 28.010 | 0.4259 | 0 | 0.00 | 0.0000 | #DIV/0! | | | #DIV/0! |
| Methane | 16.041 | 0.7500 | 0.2500 | 0.00 | 0.0000 | #DIV/0! | #DIV/0! | | |
| Ethane | 30.067 | 0.8000 | 0.2000 | 0.00 | 0.0000 | #DIV/0! | #DIV/0! | | |
| Ethylene | 28.051 | 0.8571 | 0.1429 | 0.00 | 0.0000 | #DIV/0! | #DIV/0! | | |
| Propane | 44.092 | 0.8182 | 0.1818 | 0.00 | 0.0000 | #DIV/0! | #DIV/0! | | |
| Propene | 42.077 | 0.8571 | 0.1429 | 0.00 | 0.0000 | #DIV/0! | #DIV/0! | | |
| Isobutane | 58.118 | 0.8276 | 0.1725 | 0.00 | 0.0000 | #DIV/0! | #DIV/0! | | |
| n-butane | 58.118 | 0.8276 | 0.1725 | 0.00 | 0.0000 | #DIV/0! | #DIV/0! | | |
| Isobutene | 56.102 | 0.8571 | 0.1429 | 0.00 | 0.0000 | #DIV/0! | #DIV/0! | | |
| Isopentane | 72.144 | 0.8333 | 0.1667 | 0.00 | 0.0000 | #DIV/0! | #DIV/0! | | |
| n-pentane | 72.144 | 0.8333 | 0.1667 | 0.00 | 0.0000 | #DIV/0! | #DIV/0! | | |
| n-hexane | 86.169 | 0.8372 | 0.1628 | 0.00 | 0.0000 | #DIV/0! | #DIV/0! | | |
| H2S | 34.076 | 0 | 0.0586923 | 0.00 | 0.0000 | #DIV/0! | #DIV/0! | | |
| Totals | | | | 0.00000 | 0.0000 | #DIV/0! | #DIV/0! | #DIV/0! | #DIV/0! |

***CALCULATED VALUES***

| | | |
|---|---|---|
| **O2 F Factor (dry) =** | **#DIV/0!** | **DSCF of Exhaust/MM Btu of Fuel Burned @ 0% excess air** |
| **O2 F Factor (wet) =** | **#DIV/0!** | **SCF of Exhaust/MM Btu of Fuel Burned @ 0% excess air** |
| **Moisture F Factor =** | **#DIV/0!** | **SCF of Water/MM Btu of Fuel Burned @ 0% excess air** |
| **Combust. Moisture =** | **#DIV/0!** | **volume % water in flue gas @ 0% excess air** |
| **CO2 F Factor =** | **#DIV/0!** | **DSCF of CO2/MM Btu of Fuel Burned @ 0% excess air** |
| **Fuel VOC % (non-C1) =** | **#DIV/0!** | |
| **Fuel VOC % (non-C1,C2) =** | **#DIV/0!** | |

# APPENDIX B4

# Aerodyne Methods

The descriptions presented in this appendix are the analytical methods documentation provided by Aerodyne Research, Inc., which will be making the in situ flare flue gas measurements for the Comprehensive Flare Study Project.

Aerodyne Specific Instrumentation Methods:

*1) Quantum Cascade Tunable IR Laser Differential Absorption Spectrometer (QC-TILDAS)*

Quantum cascade, tunable infrared laser differential absorption spectroscopy (QC-TILDAS) has been used in numerous research contexts for the absolute, unambiguous detection of small molecules with rotationally resolved infrared vibration spectra. The wavelength region is known as the 'fingerprint' region for its ability to be highly specific.

QC-TILDAS will be used to measure methane ($CH_4$), $NO_2$ formaldehyde (HCHO), and CO with 1 s time resolution to fingerprint combustion sources. The Limit of Detection (LOD) at 1 s is typically 0.5-0.7 ppb, except for methane, for which it is 3 ppb. The LOD is much smaller at 1 min time resolution.

Although the QC-TILDAS method is fundamentally an absolute Beers-law absorption technique that does not require calibration, Aerodyne has found that the use of calibration procedures, either in the field or in the laboratory prior to deployment is a mandatory practice. The analysis software records all direct absorption spectra, which can facilitate archival re-analysis that retains substantial value if there are any future discoveries about the spectroscopy.

There are some fundamental sources of systematic error though that have to be checked and monitored that can foil this method. Typically the calibration is used to fix the source of the problem. The analytical method is a number-density detection scheme, that is to say it counts the molecules along the beam path in the absorption cell. In order to convert this measurement to a mixing ratio, the cell pressure and temperature need to be accurately measured. The temperature measurement is known to be good to +/- 1K which is less than 1%. The pre-measurement checks for pressure are to compare the three manometers in the truck during stopped or very shallow flow to ensure they agree. Periodically the pressure heads are calibrated by the factory. They do require as much warm up time as the instrument itself for true readings.

In previous measurement campaigns, the calibration of the HCHO measurement is preformed using a calibrated permeation source diluted into zero air. The instrument has been seen to hold its calibration within the current uncertainty in the absorption line strengths (7%). Because the calibration source in this case, the permeation tube, requires substantial time to achieve its steady state delivery, it will not be practical as an on-site calibrant. This will be done prior to the campaign.

We will calibrate the carbon monoxide and nitrogen dioxide compounds during the pre-mission set up period on-site and prior to packing up the mission at departure. We use a certified source of CO, NO and $SO_2$ together with a dynamic dilution system. The NO in this certified source is converted to $NO_2$ using an ozonizer in the Chemiluminescence analyzer described later. Plots such as that depicted in the inset for the AAFEX campaign are generated during the calibration procedures. This analysis will be in the preliminary report to the UT/TCEQ on the results of this campaign.

We acquired a new laser device that operates at a more favorable wavelength for the detection of $C_2H_4$. The old laser was calibrated against gas chromatography during an eight week campaign and found to be within 3% of those measurements once the laser linewidth was properly measured. The ethene measurement that will be done under this work has not been calibrated yet, but similar to the formaldehyde measurement, we will perform a laboratory calibration prior to the mission deployment. The preliminary results from the new laser at AAFEX (January 2009) were quite favorable, however the calibration will be needed to verify the retrieved concentrations.

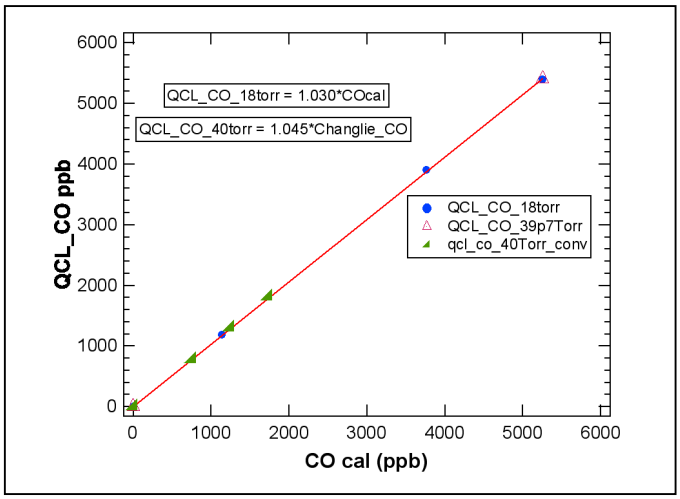


*2) LiCor $CO_2$ Analyzer*

A fast (1 s time resolution) $CO_2$ analyzer will enable the use of above background concentrations of $CO_2$ + CO to identify combustion sources and calculate fuel-based emission indices for NOx, CO, HCHO, other trace gases and particulate matter (PM) from these sources.

We use several instruments for monitoring $CO_2$. When the concentration range is in excess of 2500 ppmv, we use the Licor model 820 instrument equipped with the short absorption cell. When the concentration range is less than 2500 ppmv, we rely on two Licor model 6262 instruments. Occasionally, Licor model 840 are also used when the Licor 6262 is not available on a particular sampling line. The on-site calibration procedures are similar in principal for all of the units. The Licor 6262 have additional sorbent chemicals that are changed in the laboratory prior to deployment.

In the field, the $CO_2$ instruments are calibrated semi-daily with the use of a $CO_2$ free zero air (also used to zero other instruments in the suite) and a certified calibration span gas. Typically we calibrate all of the instruments with a span gas less than 2000 ppmv. The reference tank is checked several times during the campaign, while awaiting engine-on or during the end of day data archival. When available, the 8x0 units are checked at a higher concentration tank.

Experience has taught us that the instruments typically hold their calibration very well when they are not subjected to caustic pressure changes and when particulate matter is filtered from the sample gas. The sample gas is moved through the instrument in two

ways depending on the experiment. In the dedicated engine testing on the 1 meter probe, there is little hope of having the manifold pressure be constant. To prevent the instrument from experiencing the pressure fluctuations in the manifold, we use a sealed diaphragm pump to compress sample and 'push' it through the instrument. The flow through the instrument is monitored with a venturi flow meter on the outlet to ensure that the instrument is always sampling continuously.

In the mode when sampling from atmosphere, such as is the case in a 30 meter probe or when sampling from the front of the truck, we use the vacuum pump and a critical orifice to draw sample through the instrument. Generally, in this mode the QC-TILDAS instrument, described earlier, control valving which periodically floods the inlet with zero air. This serves several functions. The licors are zeroed by this process, the time response is evaluated and any sample line temporal offset (1-2 seconds) is measured.

*3) Proton Transfer Mass Spectrometer (PTR-MS)*

A PTR-MS will measure various VOCs, including the HAPs: benzene, toluene, the sum of ethylbenzene and the xylenes (BTEX), as well as additional HAPs such as acetaldehyde, acetone, acetonitrile and methanol. All measurements have 2 s time resolution. The LOD for benzene and other HAPS is typically ~2 ppb at 1s and ~0.3 ppb at 1 min.

The PTR-MS (Ionicon Analytic GMBH) is a chemical ionization based mass spectrometry method that utilizes $H_3O^+$ as a reagent ion. A schematic of the PTR-MS is provided in inset. The instrument consists of an ion source, a drift tube reaction region and a quadrupole mass spectrometer. $H_3O^+$ reagent ions formed in the hollow cathode discharge ion source are electrostatically injected into the drift tube through which the sampled air stream is continuously passed at reduced pressure, 2.0 mbar. These $H_3O^+$ reagent ions are pulled through the air sample by an electric field where they can react via proton transfer reactions, depicted in the equation below, with those components (R) in the sample having proton affinities greater than that of water. The reagent ions and the resulting proton transfer reaction products are mass selected and detected using the mass spectrometer.

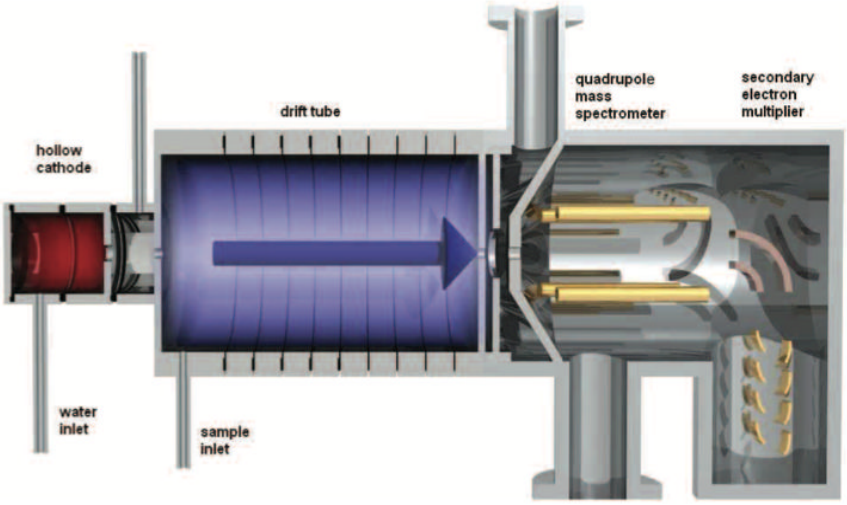

$$H_3O^+ + R \longrightarrow RH^+ + H_2O$$

Aircraft turbine engine exhaust contains a complex mixture of hydrocarbons. . In a 1994 study there were identified 57 different organic compounds in the exhaust of a CFM-56 engine of which 45 are expected to be ionized and detected by the PTR-MS. Many of these components do not provide unique ion signatures in the PTR-MS and thus are not distinguishable or identifiable on the basis of ion mass alone. Interpretation of the PTR-MS analysis of aircraft turbine engine exhaust is aided considerably and shaped heavily by detailed chemical composition information taken from former studies. By knowing what compounds are present along with the ionization dynamics for those compounds, it is possible to interpret the mass spectrum and reasonable decisions can be made regarding which exhaust compounds can be accurately quantified using the PTR-MS. A compilation of the compounds and their emission data that were examined by the PTR-MS technique is summarized below. The data in the comparison table has been normalized to formaldehyde (measured independently by tunable infrared laser differential spectroscopy) because it has been found to remove the effects of ambient temperature and variations in power (4% - 7% rated thrust) and allows for the examination of the relative distribution of the different VOC emission products present in the exhaust. In the section that follows, each of the compounds is critically evaluated in terms of which neutral components contribute to the intensity of that ion signal. Where possible, an estimate of the fraction of the signal attributable to the different components is also provided. Proton transfer reaction product branching fractions are taken primarily from independent laboratory studies performed under experimental conditions. Similar results have been observed in all of the subsequent aircraft exhaust emission measurement campaigns. In some cases the branching fractions and ionization efficiencies are taken from other studies determined under different experimental conditions and are not necessarily totally reflective of the measurements reported within.

**Comparison of PTR-MS measurements with that of a 1994 campaign for CFM-56 engine at idle.**

| Neutrals | $ER_x/ER_{HCHO}$ PTR-MS Slope ($r^2$) | $ER_x/ER_{HCHO}$ Spicer et al. | % Deviation | $EI_x$[(a)] g/kg | LD[(b)] g/kg |
|---|---|---|---|---|---|
| Methanol | 0.17 (0.97) | Na[(c)] | Na | 0.22 | 0.003 |
| Propene (estimated – see text) | 0.31 (0.97) | 0.26 | 19 | 0.53 | 0.01 |
| Acetaldehyde | 0.18 (0.97) | 0.24 | -22 | 0.33 | 0.01 |

| | | | | | |
|---|---|---|---|---|---|
| Butenes + acrolein | 0.18 (0.98) | 0.19 | -7 | 0.41 | 0.002 |
| Acetone + propanal + glyoxal | 0.076 (0.94) | 0.122 | -26 | 0.18 | 0.004 |
| Acetic acid | 0.038 (0.64) | Na | Na | 0.09 | 0.01 |
| Pentenes | 0.28 (0.98) | 0.056 | 401 | NR[(d)] | - |
| Butanal + methylglyoxal | 0.032 (0.95) | 0.065 | -51 | 0.093 | 0.004 |
| Benzene | 0.060 (0.94) | 0.053 | 15 | 0.19 | 0.004 |
| Hexenes | 0.13 (0.98) | 0.021 | 527 | NR | - |
| Toluene | 0.023 (0.93) | 0.017 | 34 | 0.086 | 0.002 |
| Phenol | 0.024 (0.88) | 0.005 | 374 | 0.093 | 0.003 |
| Heptenes | 0.62 (0.89) | 0.011 | 5540 | NR | - |
| Styrene | 0.0070 (0.95) | 0.0073 | -3 | 0.030 | 0.001 |
| C2-benzenes + benzaldehyde | 0.027 (0.95) | 0.025 | 7 | 0.12 | 0.002 |
| C3-benzenes | 0.022 (0.92) | Na | Na | 0.11 | 0.002 |
| Naphthalene | 0.0038 (0.92) | 0.01 | -63 | 0.020 | 0.001 |
| C4-benzenes | 0.010 (0.95) | 0.0038 | 162 | 0.055 | 0.001 |
| Methylnaphthalenes | 0.0019 (0.88) | 0.0078 | -76 | 0.011 | 0.001 |
| C5-benzenes | 0.0041 (0.86) | 0.0035 | 17 | 0.025 | 0.002 |
| Dimethylnaphthalenes | 0.0007 (0.81) | Na | Na | 0.004 | 0.001 |

(a) based on ER of formaldehyde of $5.72 \times 10^{-4}$ (mole HCHO/mole $CO_2$) from Spicer et al.
(b) calculated based on the PTR-MS detection limit and a $DCO_2$ = 2000 ppmv.
(c) Na – no data available
(d) NR – not reported

*4)Nitric Oxide (NO) Chemiluminescence*

A commercial, high performance instrument will measure NO. The LOD is 0.5 ppb at 1 s, and 0.06 ppb at 1 min. This instrument is calibrated using the instrument manufacturer's protocol. An onboard dynamic dilution system is used with zero and span gasses that are certified prior to use. The calibration of NO (CL) is coupled with the calibration of $NO_2$ and CO in the QCL instruments.

*(5) Ozone ($O_3$) Ultraviolet Absorbance Photometer*

A commercial dual-beam absorbance instrument (2B Tech model 205) operating at 254 nm will measure ambient ozone with an accuracy of 2% and a time response of 2

seconds. This instrument will be used to monitor ONLY the ambient $O_3$. It is not suited to measuring $O_3$ in the concentrated exhaust. If samples are collected in the highly diluted plume (dilutions of 10,000 fold) this instrument will be used to assess the conservation of odd oxygen ($O_3$ + $NO_2$) in order to evaluate the effective chain length in the near-field flare. Direct $NO_2$ can be considered as an emission of $O_3$, but this can be determined directly from the concentrated exhaust. The measurement of effective $O_3$ downwind allows for an investigation into other radical cycles that may produce $O_3$ very quickly.

*6) Automatic Gas Chromatograph (Auto-GC)*

An auto-GC coupled with a flame ionization detector (FID) will measure about 60 hydrocarbons with a 5 minute sampling cycle and 25 minute analysis time (LOD of typically a few ppb) to characterize both emission plume and ambient background VOC concentrations. Although slower than other instruments, the auto-GC will be used for more detailed fingerprinting of sources. Emission plume fluxes for the VOCs measured in GC whole air samples can be estimated from the VOCs fluxes deduced from real-time TILDAS ($CH_4$) and PTR-MS measurements and the plume excess VOC concentration ratios provided by the GC whole air concentration measurements.

No real-time instrument will be configured for organic sulfur species detection, but some light mercaptans and dimethylsulfide may be quantified in the GC-FID samples. Lastly, two types of Aerosol Mass Spectrometer (AMS) will be used to measure organic, sulfate, nitrate, and chloride components of particulate matter (PM) at 1 min time resolution (LOD down to a few ng $m^{-3}$), while a Multi-angle Aerosol Absorption Photometer (MAAP) will be used to measure black carbon at 2 s time resolution (LOD of 5 µg $m^{-3}$ ).

Besides the meteorological instrumentation on-board the mobile laboratory, ARI also has two free standing monitors that record atmospheric pressure, temperature, humidity, GPS position, unit orientation and wind speed/direction. These units output data to a USB memory stick, are powered by automotive batteries, and are easily portable. They will be used to augment meteorological parameters upwind and downwind from the flare.

During the John Zink flare tests Aerodyne Research, Inc (ARI) will be using the Davis Anemometer #7911 for wind speed and direction measurements. Wind speed is derived using the following formula:

$V = P(2.25/T)$ , where

V = Wind Speed in mph

T = Sample speed in seconds

P = Number of pulses in the sample period

ARI will be using a sample speed of 1 second; therefore the simplified formula is,

$V = P(2.25)$

Every rotation of the anemometer generates one pulse, and the number of pulses is recorded digitally, ARI will then take that number and multiply it by 2.25 to obtain the wind speed. In conjunction with that, Davis provides a wind speed look up table, which ARI will refer to once ARI calculates a wind speed. This table provides the true wind speed and accounts for any offset error which may be present.

Wind direction is calibrated by manually. An operator will adjust the anemometer so that the dead-band of the sweep is pointing directly at the flare. ARI then will find true north and record that digital output. The #7911 anemometer has a 10 bit digital output. A full-scale output would equal 1024 bits. Therefore,

$(360^{o})/(1024 \text{ bits}) = 0.3516 \text{ degrees/bit}$

ARI will then take the given output from the anemometer and multiply it by 0.3516 to obtain the direction in degrees.

Furthermore, ARI has designed the electronics associated with the anemometer to record Relative Humidity (RH) as well as ambient Temperature (T). This is done using the Sensirion SHT1x RH and T sensor. ARI will use the high resolution mode of this device; therefore, ARI will use the following RH formula:

$RH_{Linear}\ (\%) = -2.0468 + (0.0367 * SO_{RH}) + (-1.5955e\text{-}6 * SO_{RH})^2$

Where, $SO_{RH}$ is the RH output from the Sensirion SHT1x.

For temperatures much different than 25$^{o}$C the RH sensor requires temperature compensation. This is done with the following formula:

$RH_{True} = (T_{\circ C} – 25) * (0.01008 * SO_{RH}) + RH_{Linear}$

The output for temperature from the SHT1x is much more linear. To calculate the true temperature from this device we will use the following formula:

$T = -39.69 * SO_T$

Where $SO_T$ is the digital output from the SHT1x.

# APPENDIX B5

# John Zink Company LLC QC

The quality control methods presented in this appendix are the documentation provided by the John Zink Company LLC which will be controlling all the pressure, temperature, and mass flow conditions for the Comprehensive Flare Study Project.

John Zink Company LLC Process Instrumentation Assessment Methods

A. The instruments to be used by the John Zink Company LLC to gather data for the Comprehensive Flare Study fall into 5 general groupings:

    1. Pressure transmitter or multivariable mass flow transmitter for an orifice
    2. Temperature Elements with or without transmitter
    3. Flow Element (orifice plate, pitot tube)
    4. Ambient Conditions
    5. Other instruments (Thermal mass flow meter, Ultrasonic flow meter)

The instruments used by ZINK to gather data for the project are to be calibrated or verified prior to the start of testing. The procedure to be used for each group is set forth below. The procedures reflect the fact that these are industrial instruments in an industrial setting. A calibration log will be kept for each instrument.

B. Calibration of instruments in Group 1.

    1. The primary instrument used in calibrating a pressure sensor / transmitter (PT) or a multivariable mass flow transmitter (MVT) is a Wika model 65-2000, digital electro-pneumatic calibrator. This calibrator is certified by a third party lab on an annual basis. The accuracy of the calibrator is ±0.02% of measured value.

    2. Calibration procedure for a PT
        a. Determine the span of the transmitter.
        b. Disconnect the PT from service.
        c. Connect PT to Wika calibrator and verify transmitter is still connected to data acquisition system.
        d. Connect instrument air to Wika calibrator. Utilized precision pressure controllers internal to the calibrator to dial in various pressures.
        e. Pressure the transmitter to 0%, 25%, 50%, 75%, and 100% of transmitter span. Allow each reading to stabilize.
        f. After each point has stabilized, record the value from the calibrator and the value displayed on the data acquisition system.
        g. If the data acquisition system value is ±0.5% of transmitter span of the calibrator value, for all five points, the transmitter passes.
        h. Reconnect the PT to service and attach calibration / date sticker to PT.

    3. Calibration procedure for a MVT
        a. Determine the spans of the transmitter, both gage pressure and differential pressure.
        b. Disconnect the MVT from service.
        c. Connect MVT to Wika calibrator and verify transmitter is still connected to data acquisition system.

d. Connect portable computer to transmitter via HART connection and run Rosemount MVT software.
e. Connect instrument air to Wika calibrator. Utilized precision pressure controllers internal to the calibrator to dial in various pressures.
f. Pressure the transmitter to 0%, 25%, 50%, 75%, and 100% of transmitter spans, both gage and differential. Allow each reading to stabilize.
g. After each point has stabilized, record the value from the calibrator and the value indicated for that parameter on the computer. Also record the mass flow value from the computer and the mass flow value displayed on the data acquisition system.
h. If the parameter value is ±0.5% of transmitter span of the calibrator value, for all five points, for both gage and differential pressure, and the mass flow values displayed on the data acquisition system are ±0.5% of the mass flow value from the computer, then the multivariable transmitter passes the pressure tests.
i. Reconnect the MVT to service.
j. Temperature testing is required since an RTD input is part of the multivariable transmitter. See "Calibration of instruments in Group 2" section for details.

C. Calibration of instruments in Group 2.

1. The primary instrument used in calibrating a temperature elements (TE) and/or transmitters (TT) is a Fluke model 9102S dry well. This device is certified by a third party lab on an annual basis. The accuracy of the calibrator is ±0.45°F.

2. Calibration procedure for a TE.
   a. Insert element into Fluke dry well and verify element is connected to data acquisition system.
   b. Adjust drywell temperature to 100°F and allow sufficient time for temperature reading to stabilize.
   c. Record the value from the calibrator and the value indicated on the data acquisition system.
   d. Adjust drywell temperature to 150°F and allow sufficient time for temperature reading to stabilize.
   e. Record the value from the calibrator and the value indicated on the data acquisition system.
   f. Place element into an ice water bath and allow sufficient time for the temperature reading to stabilize.
   g. Record the value from the data acquisition system.
   h. If all three values from the data acquisition system are ±5°F of the dry well reading and 32°F, the element passes.

3. Calibration procedure for a TT.
    a. Note that the only temperature transmitter utilized for the project is connected to the GE ultrasonic flow meter.
    b. Verify the element is connected to the transmitter and the transmitter is connected to the flow meter.
    c. Insert element into Fluke dry well.
    d. Adjust drywell temperature to 100°F and allow sufficient time for temperature reading to stabilize.
    e. Record the value from the calibrator and the value indicated on the GE flow meter display.
    f. Adjust drywell temperature to 150°F and allow sufficient time for temperature reading to stabilize.
    g. Record the value from the calibrator and the value indicated on the GE flow meter display.
    h. Place element into an ice water bath and allow sufficient time for the temperature reading to stabilize.
    i. Record the value from the GE flow meter display.
    j. If all three values from the GE flow meter display are ±5°F of the dry well reading and 32°F, the element / transmitter passes.

4. Calibration procedure for MVT.
    a. Connect portable computer to MVT via HART connection and run Rosemount MVT software.
    b. Insert element into Fluke dry well
    c. Adjust drywell temperature to 100°F and allow sufficient time for temperature reading to stabilize.
    d. Record the value from the calibrator and the temperature value indicated on the portable computer.
    e. Adjust drywell temperature to 150°F and allow sufficient time for temperature reading to stabilize.
    f. Record the value from the calibrator and the temperature value indicated on the portable computer.
    g. Place element into an ice water bath and allow sufficient time for the temperature reading to stabilize.
    h. Record the temperature value from the portable computer.
    i. If all three values from the portable computer are ±5°F of the dry well reading and 32°F, the element / transmitter passes.
    j. Reconnect the TE to service.
    k. If the transmitter has passed the pressure tests, attach calibration / date sticker to MVT.

D. Calibration of instruments in Group 3.
    1. Orifice meters
        a. For orifice meters, the orifice diameter is measured and verified to match the markings on the orifice plate.

b. The orifice is inspected for damage to the inlet or outlet edges. If damage is found, the orifice is replaced.
c. The diameter of the orifice run is measured and recorded.
d. Utilizing Rosemount MVT software, verify the orifice size, line size, tap type, and gas are correctly input into the transmitter.

2. Pitot tubes
    a. The pitot tube is inspected for damage or blockage.
    b. Orientation of the pitot in the sample collector is verified.

E. Comparison of ambient meteorological readings to those at the Tulsa International Airport.
    1. Ambient temperature, humidity, barometric pressure, wind velocity, and wind direction at the test site will be recorded using existing site instruments.
    2. The site data will be compared to the data recorded by the National Weather Service at the Tulsa International Airport. (Note: The Tulsa airport is approximately 3 miles west of the John Zink site.

F. Calibration of ultrasonic flow meter and thermal mass flow meter.
    1. Ultrasonic flow meter
        a. The ultrasonic flow meter is assembled by the manufacturer and sent to a 3rd party laboratory for flow testing.
        b. With ultrasonic flow meters, the only parameter that affects accuracy that can be adjusted in the field is the distance between transducers. Consequently, once the transducers are set and the accuracy is determined by the flow lab, there is no drift.
        c. The flow testing for the ultrasonic meter will occur in July 2010 and a calibration certificate will then be available.

    2. Thermal mass flow meter
        a. The thermal mass flow meter is calibrated in the manufacturer's flow lab. N.I.S.T. traceable calibration certificate is supplied.
        b. Adjustment of calibration in the field is not possible.
        c. The flow testing for the thermal mass flow meter occurred in May / June 2010.
        d. The internal diameter of the air flow duct into which the flow meter will be installed will be verified to match with the 59.5" the transmitter was calibrated to.

# APPENDIX B6

# Zephyr Calculations

The calculations presented in this appendix are the documentation provided by Zephyr Environmental Company, which will be providing the emission estimates using conventional methods for the Comprehensive Flare Study Project.

# Zephyr Environmental
# Description of Calculations

Hourly Emission Rate:

VOC
VOC (lb/hr) = mass flared (lb/hr) * (100 - %DRE) / 100

Other Compounds (THC, NOx, CO)

THC (lb/hr) = flow rate (scf/hr) * Heat Content (BTU/scf) * Emission Factor (lb/MMBTU)

NOx (lb/hr) = flow rate (scf/hr) * Heat Content (BTU/scf) * Emission Factor (lb/MMBTU)

CO (lb/hr) = flow rate (scf/hr) * Heat Content (BTU/scf) * Emission Factor (lb/MMBTU)

# APPENDIX B7

# John Zink Company LLC Calculations

The calculations presented in this appendix are the documentation provided by the John Zink Company LLC which will be providing the average exit velocity and lower heating value of the fuel being combusted for the Comprehensive Flare Study Project.

# Description of Calculations

John Zink Company LLC

20 Aug. 2010

## Nomenclature

SCF = standard cubic foot
SCFS = standard cubic foot per second
SCFH = standard cubic foot per hour
TNG = Tulsa natural gas

## Calculation of Tip Exit Velocity

Assume that no steam condenses when mixed with the fuel.
Assume the fuel constituents and steam all behave as an ideal gas.

Measured Variables:

- C3H6 = Mass flow of propylene lb/hr
- N2 = Mass flow of nitrogen lb/hr
- STM = Mass flow of center steam lb/hr
- TNG = Mass flow of TNG lb/hr

Constants and Conversion Factors

- Exit area of steam flare tip = 5.957 $ft^2$
- Fuel exit area of air flare tip = 1.68 $ft^2$
- Molecular weight of propylene = 42.080
- Molecular weight of steam = 18.015
- Molecular weight of nitrogen = 28.013
- Molecular weight of TNG = 17.156
- 385.26 SCF = 1 lb-mole
- 3600 seconds = 1 hr
- Standard pressure = 14.696 psia
- Standard temperature = 68°F

Calculated Values

- F_SCFS = Fuel mixture flow in standard cubic feet per second $ft^3$/sec
- Flow = Total mass flow rate of steam / fuel mixture lb/hr
- M_SCFS = Steam / fuel mixture flow in standard cubic feet per second $ft^3$/sec

Steam Flare

Step 1: Convert steam / fuel mass flows to standard cubic foot per second units.

$$\left(\frac{C3H6}{42.080}+\frac{N2}{28.013}+\frac{TNG}{17.156}+\frac{STM}{18.015}\right)x\frac{385.26}{3600}=M_SCFS$$

Step 2: Divide the volumetric flow of steam / fuel at standard conditions by the area of the steam flare tip.

| Exit velocity of the steam assisted tip (ft/sec) = M_SCFS / 5.957 $ft^2$ |
|---|

Air Flare

Step 1: Convert fuel mass flows to standard cubic foot per second units.

$$\left(\frac{C3H6}{42.080}+\frac{N2}{28.013}+\frac{TNG}{17.156}\right)x\frac{385.26}{3600}=F_SCFS$$

Step 2: Divide the total fuel volumetric flow by the area of the air assisted flare tip

| Exit velocity of the air assisted tip (ft/sec) = F_SCFS / 1.68 $ft^2$ |
|---|

Calculation of LHV of Fuel Mixture

Assume the material is mixed homogeneously.

Known Parameters

- Mass flow of propylene lbs/hr, (C3H6)
- Mass flow of nitrogen lbs/hr, (N2)
- Mass flow of TNG lbs/hr, (TNG)

Constants and Conversion Factors

- Molecular weight of propylene = 42.080
- Molecular weight of nitrogen = 28.013
- Molecular weight of TNG = 17.156
- 385.26 SCF = 1 lb-mole
- LHV of propylene = 2152 BTU/SCF
- LHV of nitrogen = 0 BTU/SCF
- LHV of TNG = 899 BTU/SCF
- Standard pressure = 14.696 psia
- Standard temperature = 68°F

Step 1: Convert the mass flow of each component to SCFH

$$\frac{C3H6}{42.080} x385.26 = C3H6(SCFH)$$

$$\frac{N2}{28.013} x385.26 = N2(SCFH)$$

$$\frac{TNG}{17.156} x385.26 = TNG(SCFH)$$

Step 2: Calculate the total energy content of the mixture. Note that nitrogen has zero contribution.

$$C3H6(SCFH)x2152 + TNG(SCFH)x899 = TotalBTU / Hr$$

Step 3: Divide the total BTU content by total volume of mixture

$$\boxed{\frac{TotalBTU / Hr}{C3H6(SCFH) + N2(SCFH) + TNG(SCFH)} = BTU / SCF(mixture)}$$

# APPENDIX B8

# Aerodyne DRE

The description presented in this appendix are the destruction removal efficiency calculation documentation provided by Aerodyne Research, Inc., which will be making the in situ flare flue gas measurements for the Comprehensive Flare Study Project.

**Aerodyne Approach using Carbon Fraction to compute DRE**

Using the carbon fraction metric to characterize emissions allows for varying dilution of the emissions. The essential tenant in this methodology is to measure all possible routes for carbon. In a highly efficient combustion process, carbon dioxide and carbon monoxide tend to account for the majority of the fuel or process gas burned. As the combustion becomes increasingly inefficient the un-burned and partially burned compounds become important to measure.

The 'carbon fraction' CF for a specific compound *Q* is defined as:

$$CF(Q) = \frac{q \bullet moles(Q)}{\sum \text{all carbon atoms}} \qquad (1).$$

Where *q* is the number of carbon atoms present in species *Q*. For example propane and propylene (propene) each have three carbon atoms which implies *q* = 3. The normalizing quantity depicted as the sum of all carbon atoms need only carry the same units as the numerator.

Alone, the carbon fraction isn't useful, but for mixtures it is essentially the carbon weighted fractional content associated with species *Q*. Consider a fuel stock mixture that consists of 25% methane and 75% propylene by volume. If this mixture is being prepared by measured flow rates the carbon fractions are represented as:

$$CF(methane) = \frac{1 \bullet 0.25}{1 \bullet 0.25 + 3 \bullet 0.75} = 0.1$$

and

$$CF(propene) = \frac{3 \bullet 0.75}{1 \bullet 0.25 + 3 \bullet 0.75} = 0.9.$$

This example shows that 90% of the carbon atoms in the mixture are present in propene and 10% are from methane.

The destruction and removal efficiency (DRE) can also be defined for species *Q* as:

$$\text{DRE} = 1 - \frac{CF_{flare_exhaust}(Q)}{CF_{initial_fuel}(Q)} \qquad (2).$$

The definition of CF is unitless and the $CF_{initial\ exhaust}$ can be computed using metered flow rates *and verified* by measurements of the pre-combustion sample stream. The $CF_{flare_exhaust}$ must be measured with a robust characterization of all fuel species, partial and complete products of combustion. Assuming the same fuel mixture of 25% methane and 75% propene as above, the $CF_{flare_exhaust}$ could be represented by the following expression.

$$CF_{\text{post combustion}}(propene) = \frac{3 \bullet \text{propene}}{1 \bullet \text{methane} + 3 \bullet \text{propene} + 1 \bullet CO_2 + 1 \bullet CO + \sum q \bullet \text{trace intermediates}}$$

The expression for the post combustion CF for propene depicted above does not account for any possible entrainment of ambient air into the pre and post combustion air mass. A flare is designed to use atmospheric oxygen to mix into the fuel and provide the needed oxidant for combustion. The ideal combustion equation in a general form is,

$$\sim CH_2 \text{ (fuel or process gas)} + 3/2\ O_2 \text{ (ambient)} \rightarrow H_2O + CO_2.$$

The background mixing ratio of $CO_2$ is typically 370 to 390 parts per million by volume (ppmv). In the absence of any combustion, sampling the *unburned* fuel+process gas following emission from the stack will contain a fraction of ambient $CO_2$. Once combustion is initiated, however, the mixing ratios of $CO_2$ (and likely CO) will be completely dominated by carbon from the fuel and process gas combustion. The mixing ratio of the fuel+process gas is initially 100%. As this is mixed with ambient air in order to be combusted the fuel+process gas mixing ratios necessarily drop. They do, however continue to exceed background $CO_2$ by a large margin. For example if in an extreme case, the fuel+process gas is diluted by 90 parts of ambient air as combustion is initiated. Assume that combustion efficiency is very high and the 1% fuel+process gas is converted to $CO_2$. In this highly diluted combustion example, the $CO_2$ mixing ratio would be

$$0.9 * 380 \text{ ppmv} + 0.1 * 10\% = 342 + 10{,}000 = 10{,}342 \text{ ppmv } CO_2$$

If a calculation merely approximated the $CO_2$ from combustion by subtracting the entire measured background $CO_2$ from the measurement, in this case it would only result in a minor error.

$$(10{,}342 - 380)/10{,}000 = 99.6\% \text{ , as opposed to } 100\%.$$

A very straightforward method can be used, however that does not approximate the $CO_2$ due to combustion but requires a simple rearrangement of the *CF* definition.

To simplify the expression, let the "prime" notation denote the measurement of a particular species multiplied by the carbon number, *eg.* 3 * propylene (ppbv) = propylene' (ppbC).

$$CF_{\text{post combustion}}(propene) = \frac{\text{propene}'/CO_2}{\text{methane}'/CO_2 + \text{propene}'/CO_2 \ + \ 1 \ + \ CO/CO_2 \ + \sum \text{intermediates}'/CO_2}$$

Dividing the numerator and denominator by measured $CO_2$ rephrases the post combustion CF in 'emission ratios'. This is extremely useful when variable dilution is taking place.

In the schematic, the figure depicts the concomitant rise in compound Q that is associated with the increase in $CO_2$. This schematic depicts how the ratio in the formulation of CF above can be determined exactly using the slope of this line.

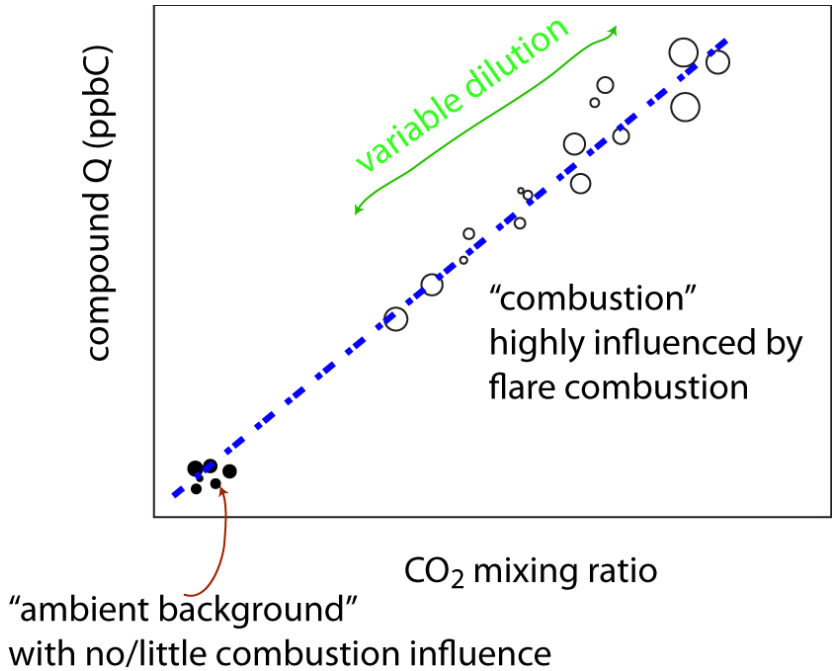


The choice of $CO_2$ in this illustration is appropriate for efficient combustion (high DRE). The post combustion CF expression can be rewritten as emission ratios with respect the fuel for very inefficient combustion (low DRE).

The schematic emission ratio figure assumes that the DRE was "constant" at the various sampled points (different dilutions). The strength of this assumption for flare combustion is not known. One method of "smoothing" the variance in the combustion process will be to sub-sample a large volume of the flare and let it mix for ~1.5 seconds prior to measurement.

In order to ensure that the sampling device does not induce a perturbation to the combustion process, only a small portion of the flare combustion exhaust will be sampled. In order to desensitize the time response in the sampling apparatus to the conditions on the flare, a large over-pull is depicted in the sample hood schematic depicted below.

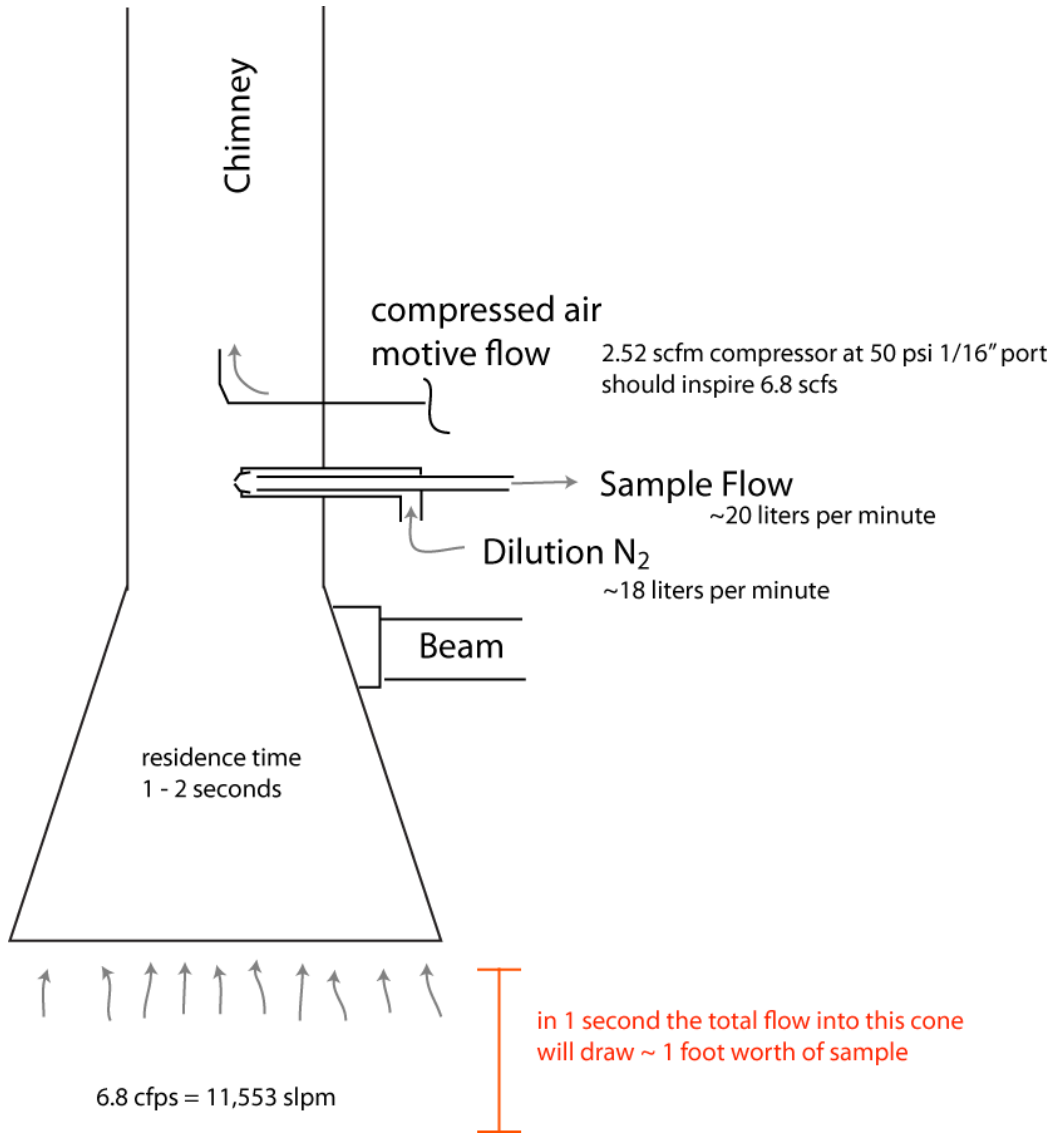


The schematic figure depicts a "cone and chimney" sampler. Compressed air induces an over pull which effectively extends the sample 'footprint' of the cone. The beam will be positioned using feedback from the monitors and chemical sensors throughout the plume depending on ambient wind conditions.

# APPENDIX B9

# IMACC CE

The mathematical equation presented in this appendix are the combustion efficiency calculation documentation provided by IMACC, which will be making a remote measurement of the flare flue gas to determine the efficiency of combustion for the Comprehensive Flare Study Project.

# Appendix B.9
# IMACC Combustion Efficiency Calculation

Combustion efficiency is defined as:

$$Combustion\ Efficiency = \frac{[CO2]}{[CO]+[CO2]+[THC]} \qquad (1)$$

Where [X] is the concentration of compound X. The fundamental output of a PFTIR is gas concentration times the path length of the gas or ppm*m. If the actual path length of the PFTIR beam through the plume is known, the ppm*m value can be divided by the path to provide gas concentration in ppm. Fortunately, the path length of all gases in the plume is the same. This means the path length cancels in the ratio given by equation (1). Consequently, for combustion efficiency, the actual path length does not need to be known.

A more subtle issue is that of gas temperature. To first order, the temperature affects the gas density and does so linearly with absolute temperature. However, the densities of all gases in the plume are influenced in the same way; so this factor also cancels in equation (1). A less significant effect of temperature is the variation it causes in spectral band shapes. This does not cancel and it must be corrected for independently.

The PFTIR was developed to provide Combustion Efficiencies not actual gas concentrations. To get actual gas concentration, accurate knowledge of both path length and temperature is required. Consequently, evaluation of gas concentrations is much more difficult than evaluation of combustion efficiency.

# APPENDIX B10

# IMACC Procedures

The descriptions presented in this appendix are the measurement procedures for the active and passive Fourier Transform Infrared (FTIR) technologies. Also included is the policy for safeguarding that the algorithm for post processing all spectral data is not altered in any way once the data results are provided to UT Austin. IMACC will be making remote measurements of the flare flue gas to determine the concentration of the compounds emitted and their respective combustion efficiencies for the Comprehensive Flare Study Project.

**IMACC Active and Passive FTIR Measurement Procedures**

FTIR monitors can be operated in “active” or “passive” mode. In active mode, as shown in Figure 1, the FTIR has an internal infrared light source and its energy is propagated through the region to be analyzed. This energy is then captured and analyzed to determine what wavelengths of the IR have been absorbed. Absorption patterns are unique to each molecule, so the presence of a particular pattern is proof of the presence of a particular compound. In addition, the strength of the absorption is proportional to the concentration of the gas producing it. Consequently, in active monitoring, the absorption patterns are used to both identify the compounds present and to quantify their concentrations. In passive mode, as in Figure 2, there is no light source in the instrument. In this case hot gases (□ 150C) external to the instrument emit their own infrared light and this light is simply captured by the instrument. It turns out; the patterns with which gases emit when they are heated are identical to those they absorb. Consequently, the same patterns observed in active or passive monitoring provides identification of the gases present. The difference in passive monitoring is that the strength of the pattern depends on gas concentration, as in active monitoring, but also on the gases temperature. This makes passive monitoring a little more difficult because there are two unknowns: concentration and temperature. However, where active absorption measurements are impractical, passive monitoring frequently allows for measurements to be made. A prime example is an elevated flare. In this case, it is all but impossible to get an IR beam through the plume and receive it afterwards. Passive monitoring only has to have a view of the plume to measure it.

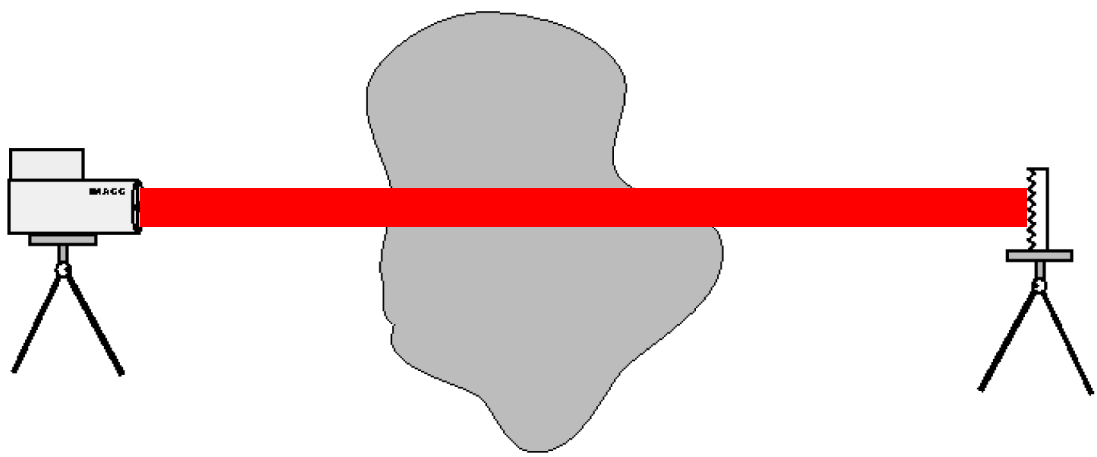

Figure 1 Active FTIR monitoring: propagating a beam through a gas cloud for detection.

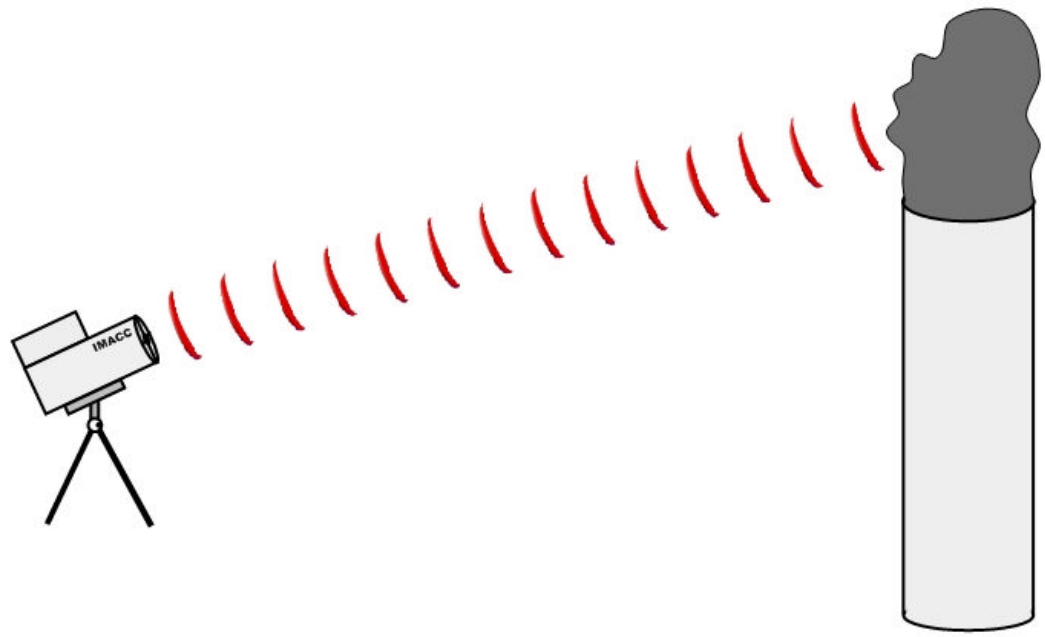


Figure 2 Passive FTIR monitoring: receiving infrared light from an elevated temperature source for gas detection.

Radiance Calculations

Radiance measurements are difficult because the signal received is a compound one. Figure 3 shows the sources of radiation which comprise the complete FTIR signal. The first arises from the sky behind the flare. Because most flares are elevated, radiation from the sky is transmitted through the flare plume, through the intervening atmospheric path and then detected by the FTIR. The hot gases in the flare itself emit radiation. This is the signal of most interest and it is propagated through the intervening atmosphere before being detected by the FTIR. The atmospheric path between the flare and the FTIR also emits as does the FTIR instrument itself. Although these emissions are small they must be accounted for. The sum of all these individual signals comprise the spectrum seen by the FTIR. The flare radiance is the component needed because it contains information about the gases present in the flare exhaust and their concentrations. Extracting this signal from the total compound spectrum of the FTIR is the analytical problem.

Several individual measurements are made to deduce the flare radiance. These are shown in Table 1. The first two are measured by aiming the FTIR at the flare and then at the sky to the side of the flare. The remaining measurements use a collimating telescope with various radiation sources. This telescope is shown in figure 4, without its enclosure which protects it from the elements. The platform on the back of the collimator accepts various types of sources. For measuring $M_{bb}$ a black body emission source is used; for $M_{ir}$ a standard infrared source is used; and for $M_n$ a liquid nitrogen cooled source is used.

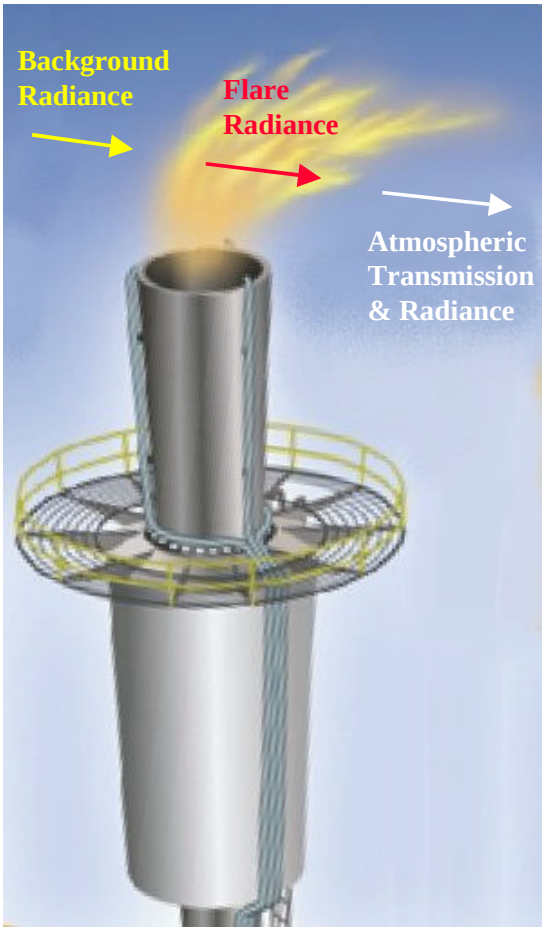


Figure 3 Sources of the passive FTIR signal when monitoring an elevated flare.

**Table 1**
**Individual measurements Required to Deduce plume transmittance**

| Measurement | Description |
|---|---|
| $M_{obs}$ | The observed flare radiance measured as a single beam spectrum with the FTIR |
| $M_b$ | The measured sky background radiance collected by looking to the upwind side of the flare |
| $M_{bb}$ | The measured radiation from a "black body" calibration source in the collimator. |
| $M_{ir}$ | The measured radiation from an infrared source in the collimator. This term allows for computation of atmospheric transmission. |
| $M_n$ | The measured collimator and air radiance obtained using a liquid nitrogen source in the collimator |

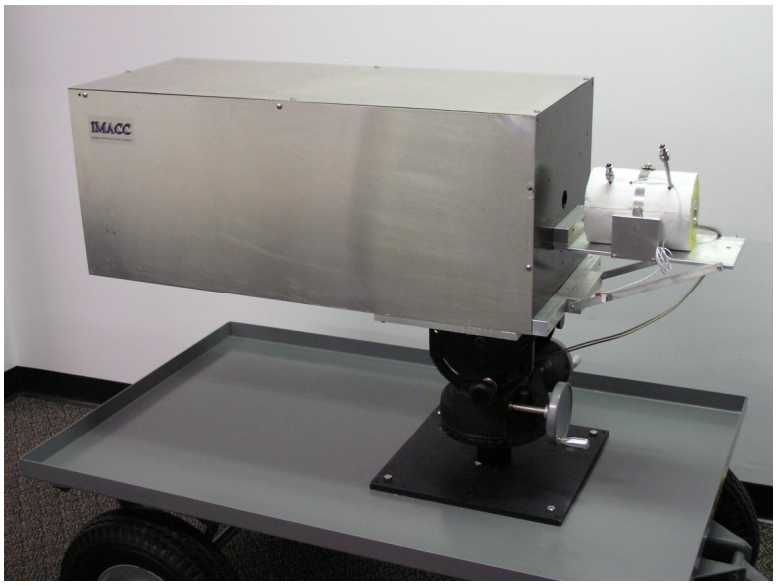


Figure 4 Calibration telescope on portable cart with hot cell. Environmental enclosure is removed.

Mathematically, the total Radiance seen by the PFTIR, denoted $M_{obs}$, is given by:

$$M_{obs} = R_{bkg} * \tau_{air} * \tau_{flr} + R_{flr} * \tau_{air} + R_{air} + R_{FTIR} \qquad (1)$$

Here R is the radiance from the various sources. The term, $\tau_{air}$, is given by the measured infrared source spectrum $M_{ir}$ divided by a smoothed version of this spectrum tracing the baseline but skipping over all molecular absorption features. This is called a synthetic $I_o$ and software to generate it is included in the standard Imacc FTIR software. $\tau_{air}$ is given by:

$$\tau_{air} = \frac{M_{ir}}{SYN_{Io}} \qquad (2)$$

The "measured" sky background $M_b$ is measured adjacent to the flare plume so it is given by:

$$M_b = R_{bkg} * \tau_{air} + R_{air} + R_{FTIR} \qquad (3)$$

The radiance produced by an object is its absorbance or (1 – transmittance) times a function called the Planck function. This function describes the radiance emitted by a totally absorbing object as a function of temperature and wavenumber. This function is given by:

$$R_{bb} = 2hc^2 \nu^3 \frac{1}{e^{hc\nu/kT} - 1} \qquad (4)$$

Where: h is Plancks constant, c the speed of light, n the wavenumber position in the infrared, k Boltzmann's constant, and T the absolute temperature. Because this represents the radiation produced by a totally absorbing object, it is multiplied by (1-transmittance) to give the emissions of partially absorbing gases.

Passive radiance measurements depend on the absolute radiant intensity of the gases observed. As a result, the instrument must be calibrated in radiance units. These units are watts of power per square centimeter of source area, per solid angle (steradians) of observation, per wavenumber of spectral resolution or (watts/cm$^2$/steradian/cm$^{-1}$). This calibration is done by measuring the radiation from an infrared source called a black body which is placed in the collimator. The black body source consists of a totally absorbing surface (or one whose absorption is known) which is heated to a known temperature. This produces radiation given by equation 4. When the FTIR measures the energy from this source, the measured spectrum is ratioed to the predicted radiation spectrum of equation 4. This then provides a calibration curve for the instrument which converts measured spectra from volts to radiance units. It is given by:

$$C = \frac{R_{bb}}{M_{bb}} \qquad (5)$$

As for the atmospheric transmission measurements discussed above, the measured spectrum $M_{bb}$ is smoothed to remove all molecular absorption, since only the baseline shaped is needed.

Given the measurements of Table 1 combined with equation 1, the transmittance of the plume itself can be deduced. This is given by:

$$\tau_p = \frac{(M_{obs} - M_n) - R_{bb}^p * \tau_{air}}{(M_b - M_n) - R_{bb}^p * \tau_{air}} \qquad (6)$$

In this equation $R_{bb}^p$ is the Planck function of equation 4 evaluated at the temperature of the flare plume. Obviously to get this term, the temperature of the plume must be known. One way of getting this temperature is by looking at the rotational envelope of emission lines from CO or $CO_2$. For CO, the spectrum looks like that shown in Figure 5. Here the individual emission lines vary in intensity through out the band. The intensity distribution is related to temperature because each line is a transition from an upper vibrational-rotational energy level of the molecule to a lower one. The number of molecules in the initial or upper state is the result of collisions which increase with

temperature. By plotting the log of intensity for each line against the energy of the upper state (E'), the slope of the resulting curve is hc/kT. This is shown in Figure 6.

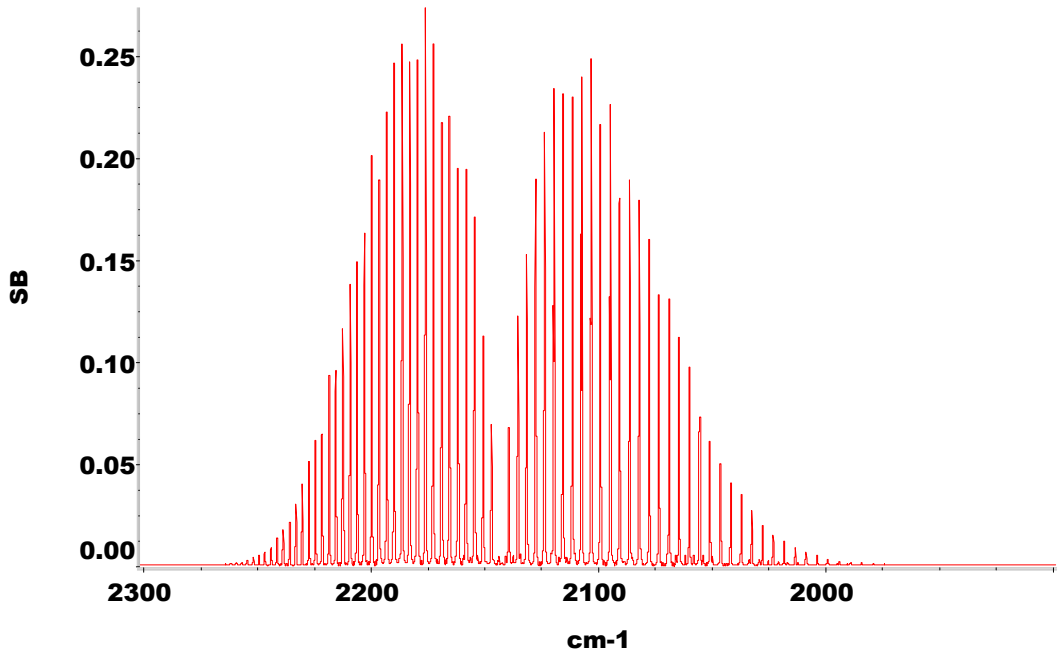


Figure 5 CO band at 2100 $cm^{-1}$ showing the distribution of the lines produced by temperature.

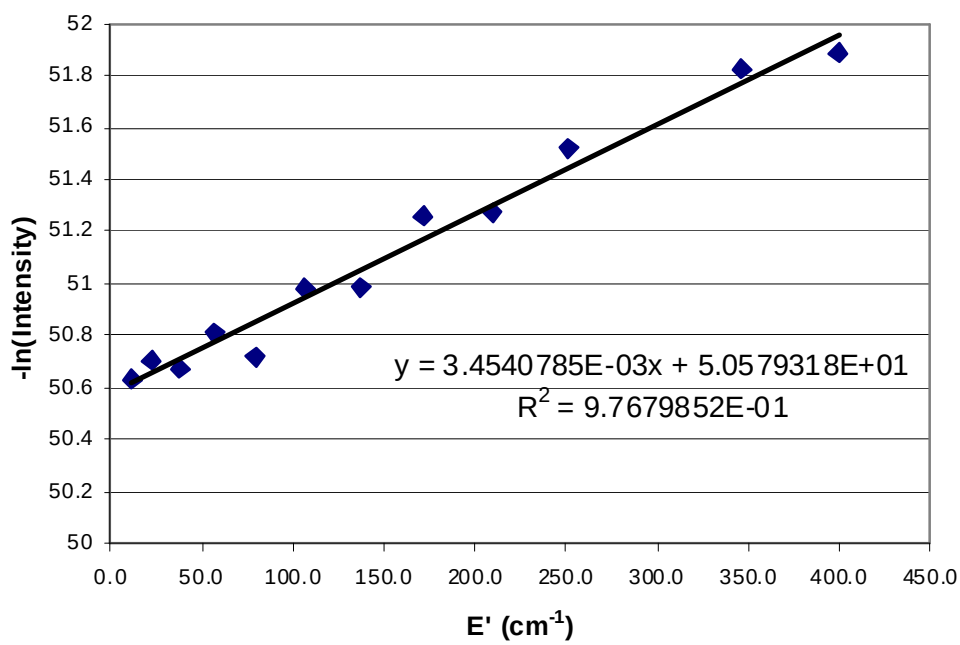


Figure 6 Plot of the intensity of CO lines in the observed flare spectrum for determination of gas temperature. In this case, the temperature was 143.5 C.

The transmittance of the flare plume is given by:

$$\tau(\nu) = e^{-\kappa(\nu)C'L} \qquad (7)$$

Where $\kappa(\nu)$ is the absorption coefficient of the gas, C' the gas concentration, and L the path length through the plume. Because this is exponential in gas concentration, $-\log_{10}$ is usually taken and this is defined as absorbance. Absorbance is then given by:

$$\text{Absorbance } (\nu) = \kappa(\nu)\, C\, L \qquad (8)$$

Absorbance spectra are the resulting spectra in active FTIR measurements. Consequently, reducing the radiance spectra to absorbance allows for all the conventional analyses done in active FTIR. Typically active FTIR analysis is done using Classical Least Squares (CLS) to deduce concentrations. CLS works well if a couple of assumptions are true. One, the plume observed must not have severe temperature or concentration gradients. This is because the CLS approach assumes a single isothermal/isobaric path. Secondly, the features emitting in the plume and those absorbing in the ambient air should not be correlated. The first assumption is usually true when observations are made several meters above the active flame zone. At that height, the exhaust gases are heavily mixed with the air yielding a randomly structured plume. The second assumption, lack of correlation, is true for most species in the plume because the concentrations of these gases in the air are very small. One possible exception to this is $CO_2$ because of the relatively high atmospheric concentrations of $CO_2$. This correlation is obvious in the strong $CO_2$ bands at 2350 $cm^{-1}$ where the atmosphere totally absorbs the center of the emitted CO2 radiation. Fortunately the CO2 bands used for passive radiance are weaker bands that have little absorption in the atmosphere. Ignoring the correlation for these bands seems to be valid.

Once the gas concentrations in the plume are measured, the combustion efficiency can be computed from:

$$Eff = \frac{[CO_2]}{[CO] + [CO_2] + THC} \qquad (9)$$

Here the square brackets represent concentration and THC is total hydrocarbon. Lighter organic species (< C5) can normally be monitored directly. Above C5 the C-H stretch region at 3000 $cm^{-1}$ is used to deduce a total hydrocarbon (C5+). Unfortunately, the lower temperature of the flare plume does not emit much energy at shorter wavelengths (larger wavenumbers). This makes the measurement of C5+ difficult unless a high sensitivity short wavelength detector can be used. Ideally a “two color” detector should be used which combines a HgCdTe detector with an InSb detector. The InSb has 10 to 100 times the sensitivity of the HgCdTe at 3000 $cm^{-1}$ so it can pull out C5+ data if the concentrations are not too low.

IMACC Algorithm Policy

1) Imacc will provide TCEQ a copy of its "FTIR Software Suite" (IFSS) that they can install on a computer at TCEQ.

2) Imacc will provide an executable copy of the analysis software to be used during testing.

3) Imacc will provide the necessary training to operate the software.

Given this, all spectra gathered on site can be reduced to gas concentrations and combustion efficiencies by TCEQ independently. If after testing we find there are still some issues with the software, we will discuss with TCEQ the changes we think should be made and if they are made provide them a copy of the new software for their use.

This will allow TCEQ to verify that the software is not being altered and they can verify the results reported.

# APPENDIX B11

# IMACC Calibrations

The descriptions presented in this appendix are the calibration procedures for the active and passive Fourier Transform Infrared (FTIR) technologies provided by IMACC, which will be making remote measurements of the flare flue gas to determine the concentration of the compounds emitted and their respective combustion efficiencies for the Comprehensive Flare Study Project.

**IMACC Hot Cell Calibration of Active and Passive FTIR Systems**

To calibrate a passive FTIR system a radiance source for each critical compound is required. Imacc has produced a "hot cell" calibration system using a heated gas cell collimated by a 12" telescope. This system is shown in Figure 1. The cell has a 15 cm path length and is heated to 250 C. It is placed at the focal point of the telescope so all radiation emitted by the cell is collimated and transmitted as a 12" diameter infrared beam to the PFTIR radiometer. Calibration gases are flowed through the cell at different concentration ratios to provide a set of radiance spectra that can be used to calibrate the AFTIR and PFTIR and to check linearity.

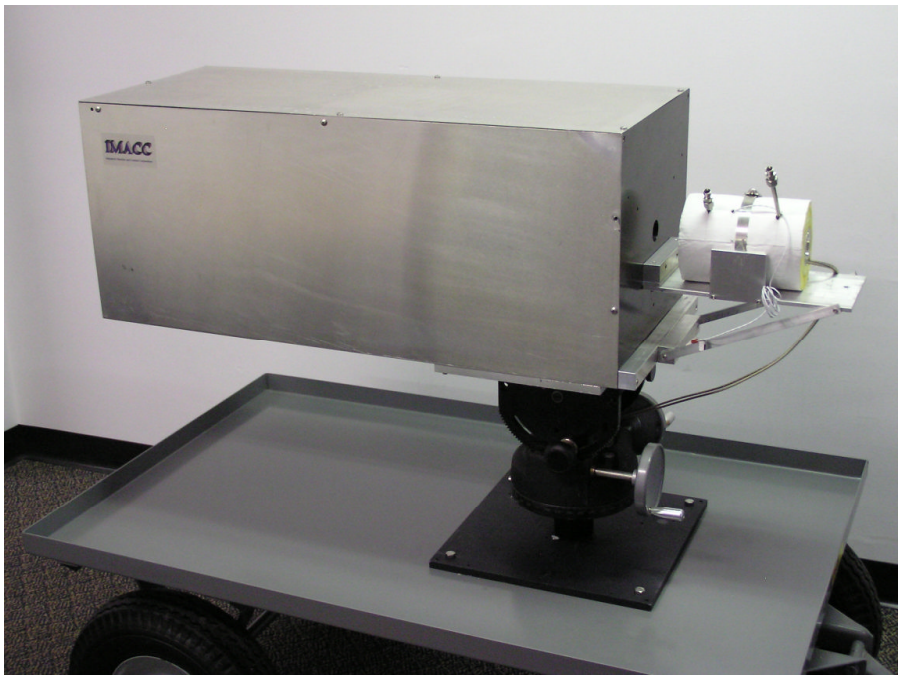


Figure 1 Heated cell attached to the 12" collimating telescope as used for calibration of the AFTIR and PFTIR.

Table 1 shows a typical set of gas concentrations used in the cell. In this case, the cal gas had CO, CO2, and CH4 at concentrations of 1000ppm, 1000pmm and 998000 ppm respectively. The first column of the table shows the percentage of the calibration gas used while the subsequent columns show the gas concentrations. An example of a radiance spectrum produced during this calibration run is shown in Figure 2. This spectrum is converted to absorbance using the standard Imacc procedures. The overall absorbance spectrum appears as shown in Figure 3. To see the CO, $CO_2$, and $CH_4$ features in this spectrum, Figures 4, 5,and 6 expand the plot around the appropriate regions for each compound. The $CO_2$ plot shows two possible analysis regions one around 765 $cm^{-1}$ and second the bands flanking 1000 $cm^{-1}$.

Table 1 Gas Mixtures Used in
Calibration of the AFTIR andPFTIR

| Mix #1 % Mixture | $CH_4$ (ppm) | Mix #2 $CO/CO_2$ flows | CO (ppm) | $CO_2$ (ppm) |
|---|---|---|---|---|
| 10 | 100 | 1 / 0.2 | 841.66 | 26500 |
| 20 | 200 | 1 / 0.4 | 721.43 | 45428 |
| 40 | 400 | 1 / 0.5 | 673.33 | 53000 |
| 50 | 500 | 1 / 0.99 | 507.54 | 79100 |
| 66.7 | 667 | 2 / 0.1 | 961.90 | 7571 |
| 100 | 1000 | 2 / 0.4 | 841.67 | 26500 |
| | | 2 / 0.8 | 721.43 | 45428 |
| | | 2 / 1.0 | 673.33 | 53000 |

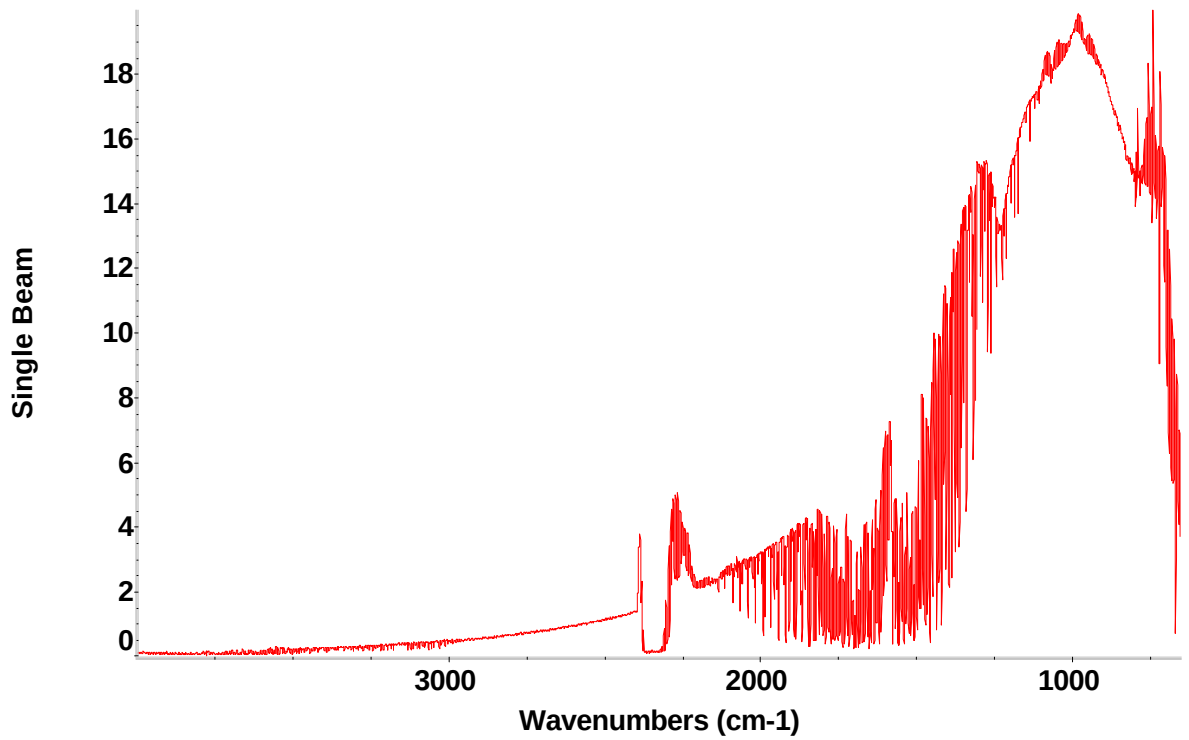


Figure 2 Radiance spectrum of 40% mixture shown in Table 1. Spectrum contains features of CO, CO2, CH4, and ambient water vapor.

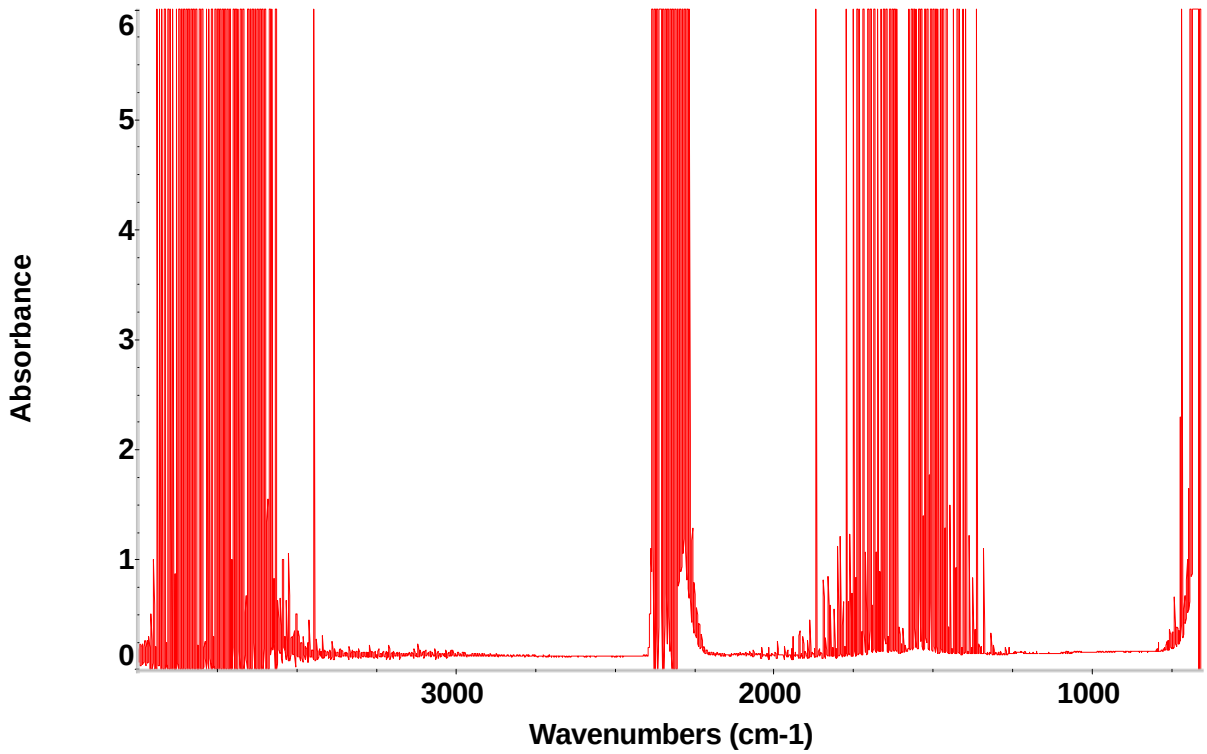


Figure 3 Absorbance spectrum of 40% gas mixture produced from the radiance spectrum of Figure 2.

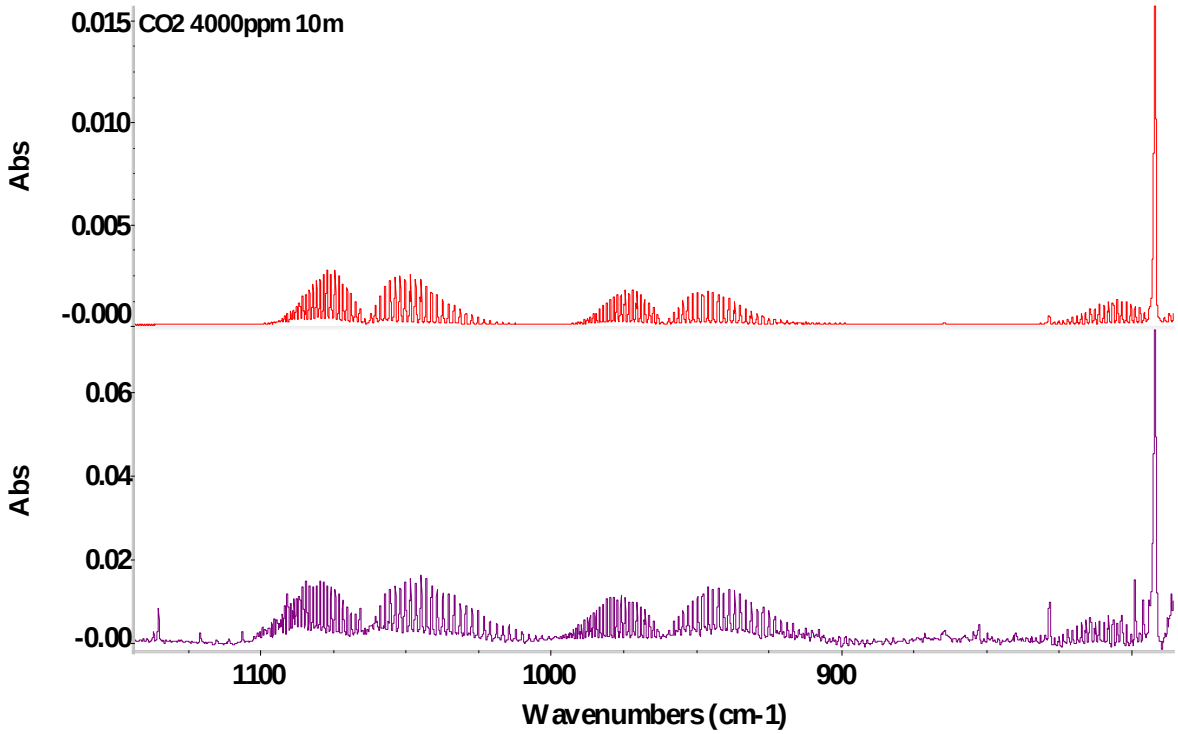


Figure 4 Absorbance spectrum of Figure 3 expanded around two $CO_2$ analysis regions. A reference spectrum for $CO_2$ is shown on top.

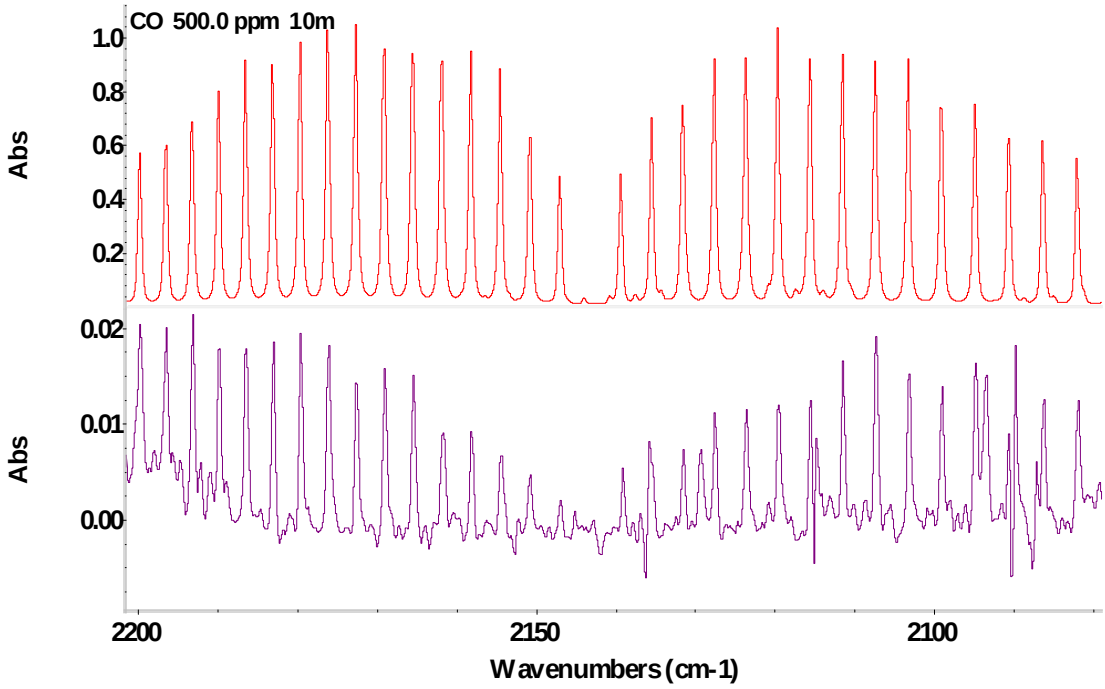


Figure 5 Absorbance spectrum of Figure 3 expanded around the CO analysis region. A CO reference spectrum is shown on top.

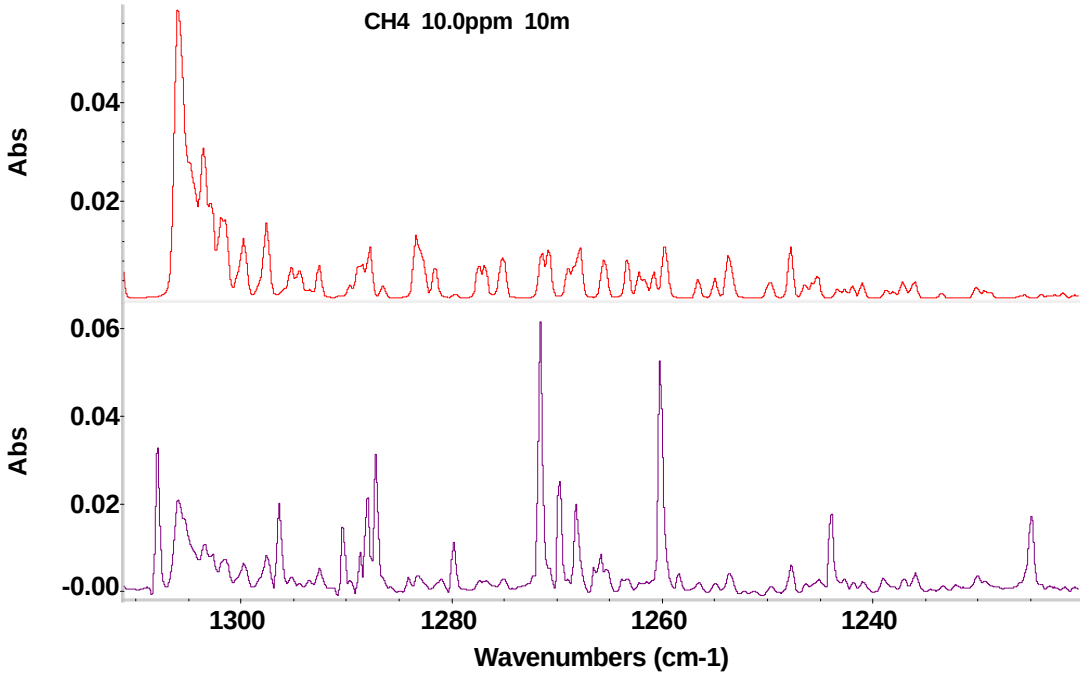


Figure 6 Absorbance spectrum of Figure 3 expanded around the long wavelength $CH_4$ analysis region. A $CH_4$ reference spectrum is shown on top. Some $H_2O$ interference is obvious.

Using the radiance spectra produced by the hot cell calibrator, the system response over the full concentration range of the calibration mixtures can be determined. These then become calibration functions for the analysis method. Examples are shown in Figures 7, 8, 9, and 10. Figures 8 and 9 show the two analysis regions for $CO_2$ in the long wavelength region. For CO and $CO_2$ the red points in the plots are for the highest spikes using the 2 l/m CO and 1 l/m $CO_2$ mass flow controllers These points appear to be in error , so they were not included in the fits.

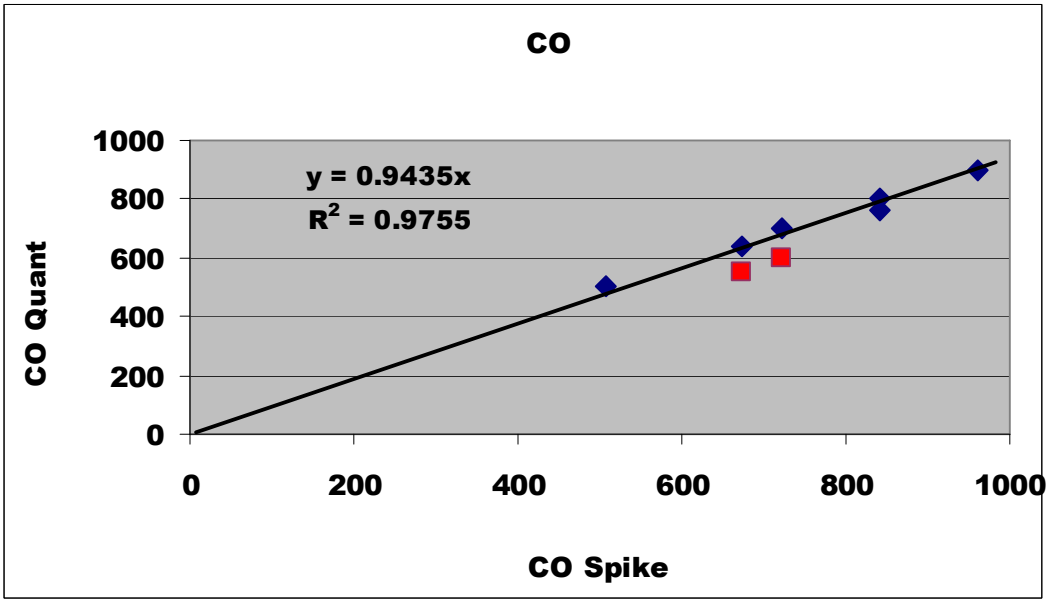


Figure 7 calibration curve from hot cell radiance data for CO. Units are ppms

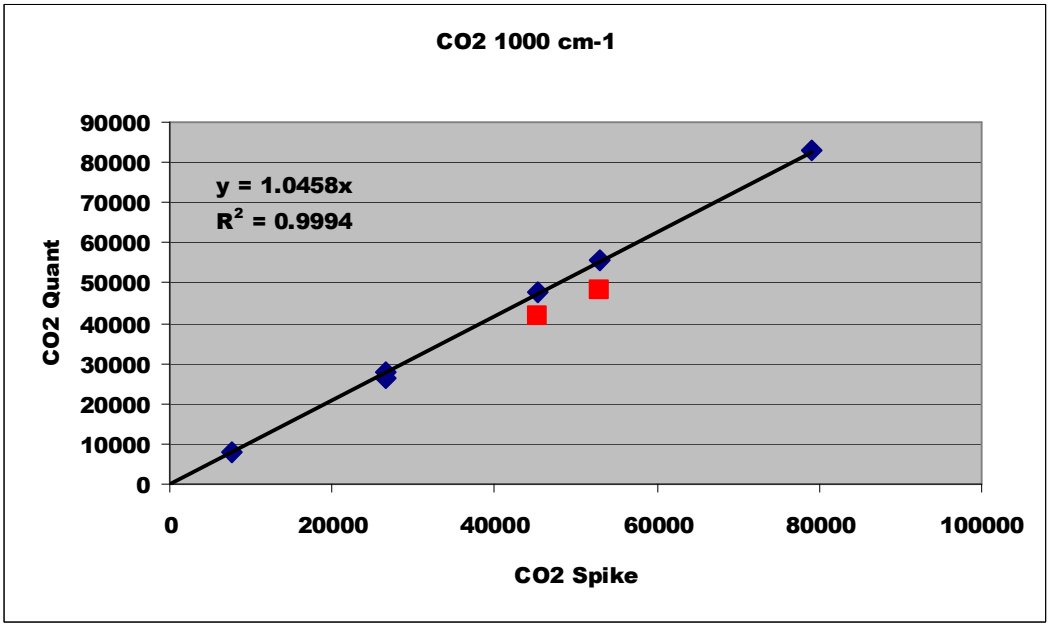


Figure 8 calibration curve from hot cell radiance data for $CO_2$. at 1000 $cm^{-1}$. Units are ppms

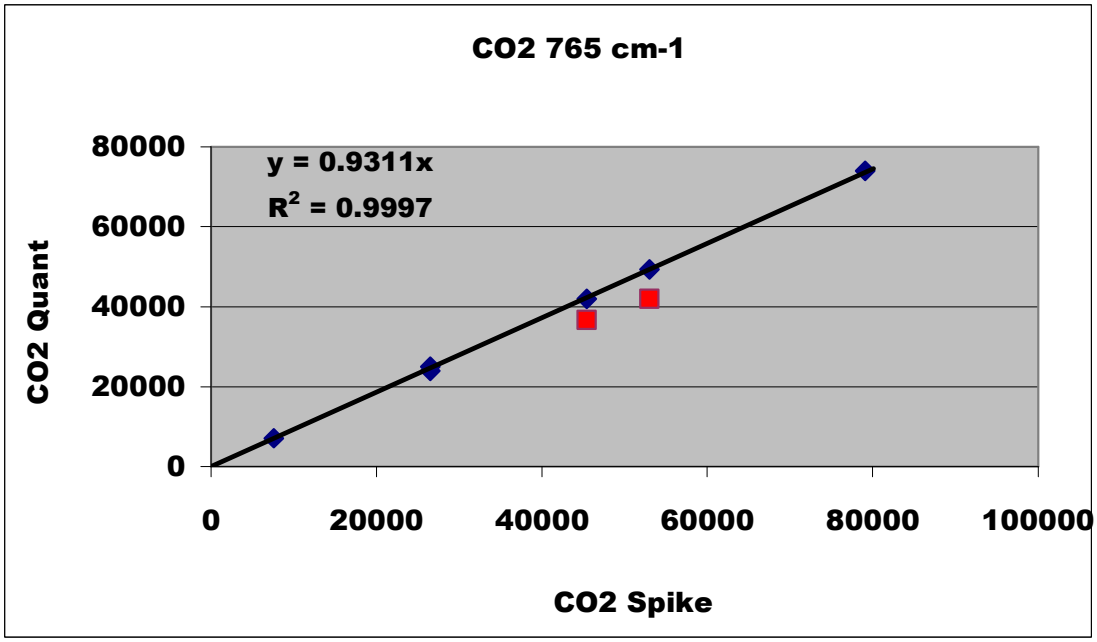


Figure 9 calibration curve from hot cell radiance data for $CO_2$. at 765 $cm^{-1}$. Units are ppms.

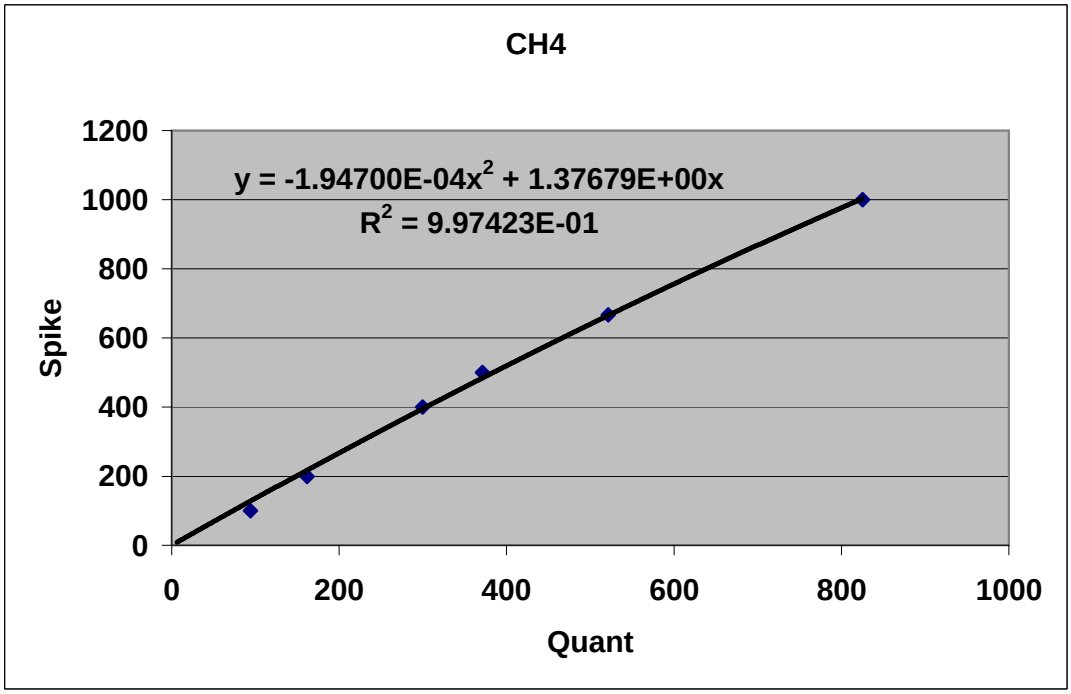


Figure 10 calibration curve from hot cell radiance data for $CH_4$. Units are ppms

# APPENDIX B12

# Telops Methods

The descriptions presented in this appendix are the analytical, data collection and quality control methods provided by Telops, Inc., which will be making a remote measurement of the flare flue gas to determine the concentration of the compounds emitted for the Comprehensive Flare Study Project.

Telops Methods

1) Methods Telops will use to collect data for the technology Telops will be using Data Acquisition: The experimental method is fairly straightforward. The Hyper-Cam is set-up and oriented to point at the flare, so as to see the upper part of the chimney and the area around the flare fire. The only other measurement that is required is the distance between the sensor and the target using a laser rangefinder or GPS coordinates or the sensor and that of the chimney. The viewed scene is measured by the Hyper-Cam for 2-15 min. Radiometric calibration data is also acquired before and/or after the scene data using the built-in automated calibration hardware. This operation takes approximately 2min.
Data Processing: The acquired scene data (~hundred of datacubes) is first analysed statistically and reduced this data to a few representative datacubes. Next these reduced datacubes are calibrated radiometrically using the acquired calibration data. Next the datacubes are analysed to look for the required information. Pixels are classified manually according to background, plume and chimney target reference. The chimney target is used to obtain the atmospheric transmittance (foreground). The plume pixels are analysed sequentially using a physical forward model that simulates the signal at the sensor based on the background radiance, plume transmittance and radiance and foreground transmittance and radiance. The plume composition (list of gases and concentrations) and temperature is varied in order to minimize the residual between the model and the experimental measurements. This process is repeated for all pixels selected in the plume. The results of this step are column densities in PPM*m.
To derive mass flow, we need gas velocity information. We use the interferograms as sequences of high speed images and “track” the “puffs of hot gases” as they move in the sequences. This allows us to derive average gas velocities in m/s at all point in the plume where such “puffs” are visible. Using this velocity field, we can derive total mass flow in kg/hour using the plume dimension information and some assumptions about plume symmetry.
The data processing steps take approximately 2h for a 10 min measurement set, but we are working on improving this time.
Please consult paper " Tremblay, P., Savary, S., Rolland, M., et al., "Standoff gas identification and quantification from turbulent stack plumes with an imaging Fourier-transform spectrometer," Proceedings of SPIE Vol. 7673, 76730H (2010)." for more details.

2) The Quality Control checks for the technology Since the measurement of chemical species is performed from first principles, the quality control checks consists in validating that the instrument is operating nominally in terms of radiometric sensitivity and spectral/spatial integrity. These

tests are performed after setup and require about one hour. In the unlikely event of a sensor malfunction, section 2.5 of the Hyper-Cam user manual will be followed for troubleshooting. The most likely action required if a problem occurs will be to tighten loose connections and restart the sensor.

# APPENDIX C1

# Schematic of Flare Measurements; Wake-Dominated Flare Flue Gas

The diagram presented in this appendix shows the in situ measurements that will be made by each company for the Comprehensive Flare Study Project during a wake-dominated flare flue gas condition.

# Schematic of Flare Measurements; Wake-Dominated Flame

| Species/Parameter Measurements |
|---|
| CO, $NO_2$ |
| HCHO, HCOOH, $CH_3CHO$,$HC_2H$ |
| $C_2H_4$ (ethene), $C_3H_6$ (propene) |
| NO |
| $CO_2$ |
| $O_3$ |
| Auto GC |
| Oxygenated, aromatic and selected olefinic VOCs |
| size-resolved chemical composition and mass loadings of PM1 |
| $CH_4$ (methane), $C_3H_6$ (propene) |
| black carbon |
| PM size distribution |
| Particle number ($D_p$>7 nm) |
| Particle mass (80 nm < Dp < 2.5 µm) |
| GPS location of sample probe |
| wind speed, wind direction, ambient temperature, relative humidity |

**Legend**

| | | |
|---|---|---|
| Gray Background | = | Discrete Measurements |
| White Background | = | Continuous Measurements |
| - - - - - - - - - | = | Sample Lines |
| Flare Diameter | = | Steam - 36", Air - 24" |
| Air Flare Height | = | 33' |
| Steam Flare Height | = | 13' |

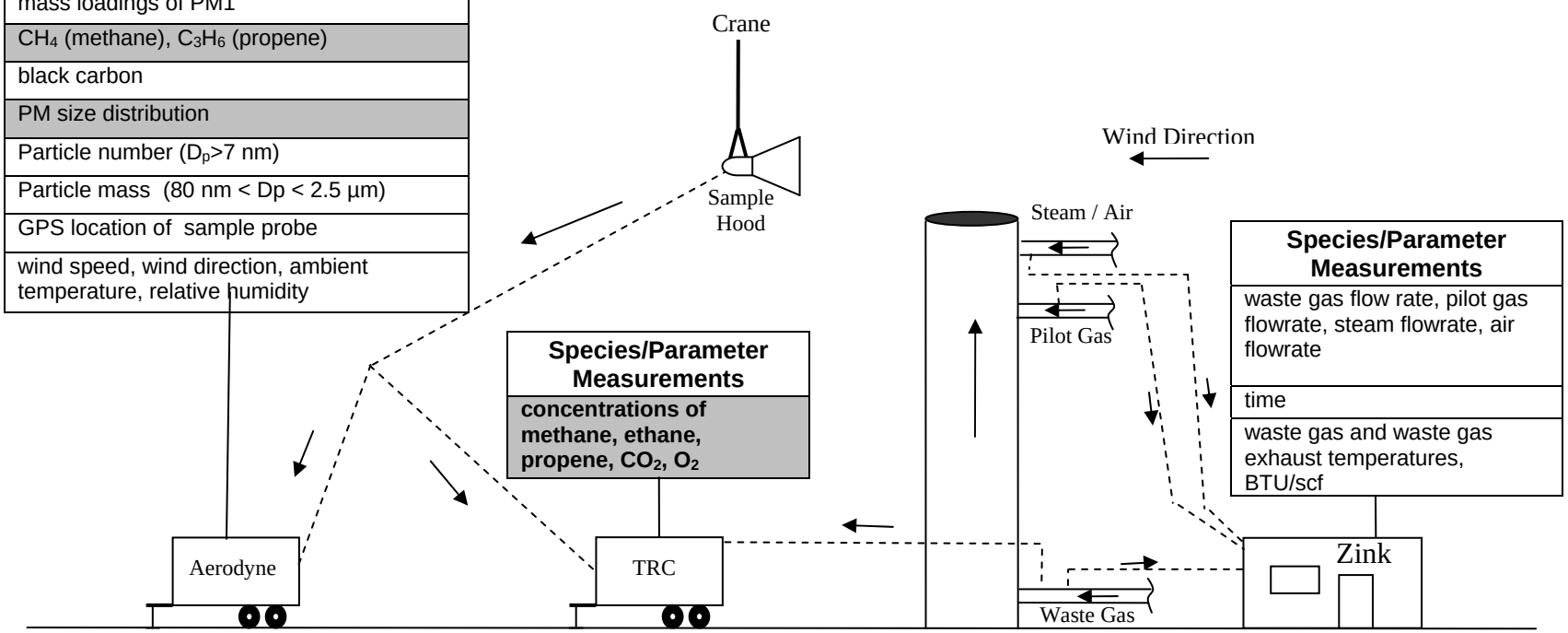


| Species/Parameter Measurements |
|---|
| **concentrations of methane, ethane, propene, $CO_2$, $O_2$** |

| Species/Parameter Measurements |
|---|
| waste gas flow rate, pilot gas flowrate, steam flowrate, air flowrate |
| time |
| waste gas and waste gas exhaust temperatures, BTU/scf |

7/7/10

# APPENDIX C2

# Schematic of Flare Measurements; Buoyancy-Dominated Flare Flue Gas

The diagram presented in this appendix shows the in situ measurements that will be made by each company for the Comprehensive Flare Study Project during a buoyancy-dominated flare flue gas condition.

# Schematic of Flare Operation Plan Measurements; Bouyancy-Dominated Flare Flue Gas

| Species/Parameter Measurements |
|---|
| CO, $NO_2$ |
| HCHO, HCOOH, $CH_3CHO$,$HC_2H$ |
| $C_2H_4$ (ethene), $C_3H_6$ (propene) |
| NO |
| $CO_2$ |
| $O_3$ |
| Auto GC |
| Oxygenated, aromatic and selected olefinic VOCs |
| size-resolved chemical composition and mass loadings of PM1 |
| $CH_4$ (methane), $C_3H_6$ (propene) |
| black carbon |
| PM size distribution |
| Particle number ($D_p$>7 nm) |
| Particle mass (80 nm < Dp < 2.5 µm) |
| GPS location of sample probe |
| wind speed, wind direction, ambient temperature, relative humidity |

**Legend**

| | | |
|---|---|---|
| Gray Background | = | Discrete Measurements |
| White Background | = | Continuous Measurements |
| - - - - - - - - - | = | Sample Lines |
| Flare Diameter | = | Steam - 36", Air - 24" |
| Air Flare Height | = | 33' |
| Steam Flare Height | = | 13' |

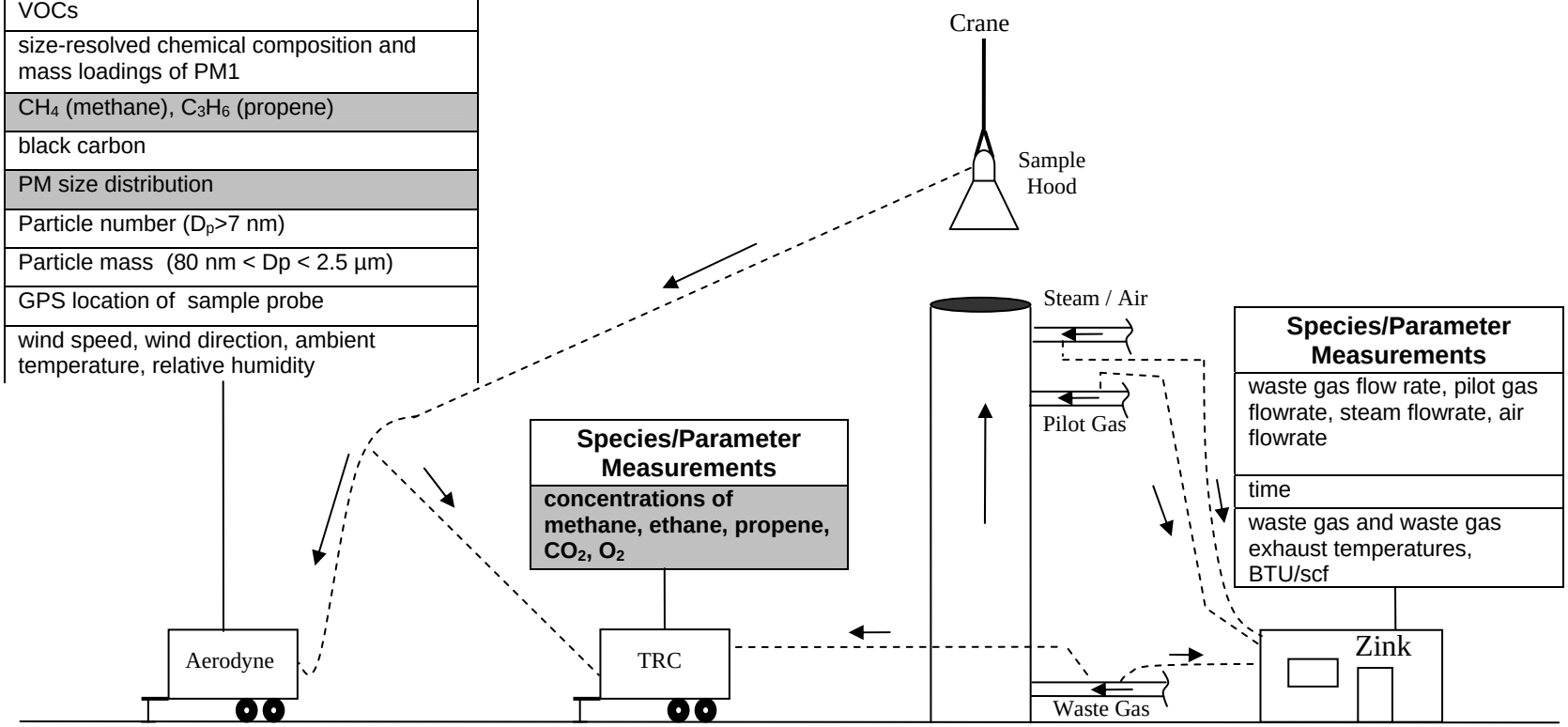


**Species/Parameter Measurements**

| |
|---|
| **concentrations of methane, ethane, propene, $CO_2$, $O_2$** |

**Species/Parameter Measurements**

| |
|---|
| waste gas flow rate, pilot gas flowrate, steam flowrate, air flowrate |
| time |
| waste gas and waste gas exhaust temperatures, BTU/scf |

7/7/10

# APPENDIX C3

# Schematic of Flare Measurements; Remotely Sensing of Flare Flue Gas

The diagram presented in this appendix shows the remote sensing measurements that will be made by each company during the Comprehensive Flare Study Project.

The specific measurements and/or video images that will be made by IMACC, LSI, and Telops are presented in Appendix G and H.

# Schematic of Flare Measurements; Remotely Sensing of Flare Flue Gas

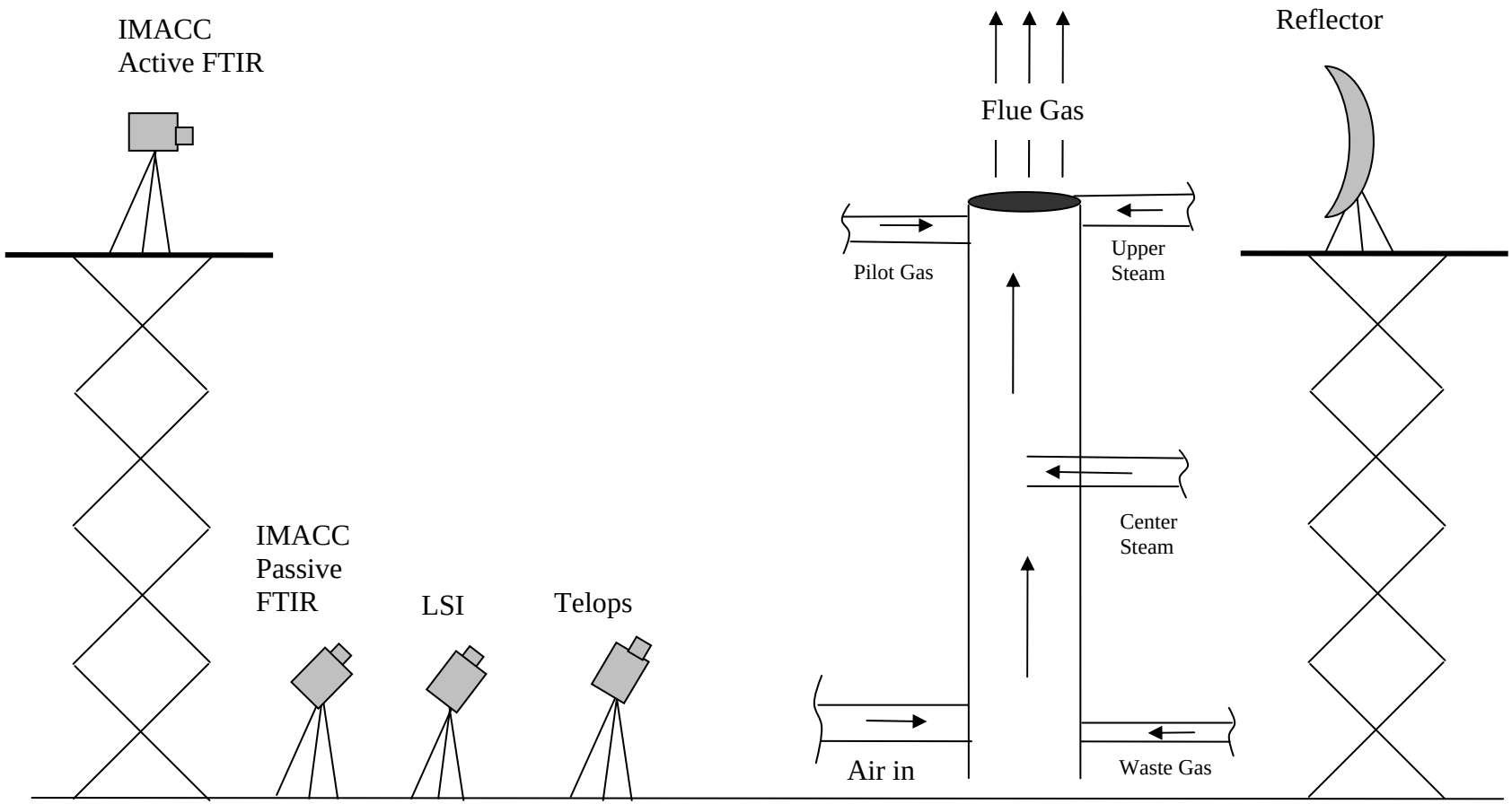

# APPENDIX D

# Comprehensive Flare Study

# Draft ZINK Flare Test Plan

The information provided in this appendix is the proposed flare test series for the air-assisted and steam-assisted flares that the John Zink Company LLC will be using for the Comprehensive Flare Study Project.

Waste gas flow rate, composition and lower heating value (LHV) will be maintained constant for each test series. Only the air-assist rate on the air flare and the steam-assist rate on the steam flare will be varied during a test series.

# Comprehensive Flare Study
# Proposed Flare Test Plan

**Test Series No. S1: Varying Steam Assist, 2,342 lb/hr Waste Gas Flow, LHV = 2,183 Btu/scf**

| Test Point No. | Waste Gas Flow | Waste Gas Composition | Steam/Waste Gas Ratio | Time (minutes) | Actual Exit Velocity (*) per 40 CFR 60.18 (fps) | Notes |
|---|---|---|---|---|---|---|
| S1.1 | 1 | 1 | Incipient SP | 20 | 1.00 | |
| S1.1 to S1.2 | 1 | 1 | Increase steam from value in Test Pt. S1.1 to value for Test Pt. S1.2 | * | 1.00 | *As Needed |
| S1.2 | 1 | 1 | < Snuff | 20 | 1.00 | |

**Test Series No. S2: Varying Steam Assist, 937 lb/hr Waste Gas Flow, LHV = 2,183 Btu/scf**

| Test Point No. | Waste Gas Flow | Waste Gas Composition | Steam/Waste Gas Ratio | Time (minutes) | Actual Exit Velocity (*) per 40 CFR 60.18 (fps) | Notes |
|---|---|---|---|---|---|---|
| S2.1 | 2 | 1 | Incipient SP | 20 | 0.40 | |
| S2.1 to S2.2 | 2 | 1 | Increase steam from value in Test Pt. S2.1 to value for Test Pt. S2.2 | * | 0.40 | *As Needed |
| S2.2 | 2 | 1 | < Snuff | 20 | 0.40 | |

Test Series 1 and 2 would be repeated up to 2 more times.

(* )Exclusive of center steam

Waste Gas Flow Legend
1 – 0.25% (nominally) of flare design capacity or 2,342 lb/hr for 36 inch steam-assisted flare burner
2 – 0.1% (nominally) of flare design capacity or 937 lb/hr for 36 inch steam-assisted flare burner

Waste Gas Composition & Lower Heating Value (LHV) Legend
1 – 100% Propylene, LHV = 2,183 Btu/scf
2 – 20/80 ratio Tulsa natural gas to propylene diluted with nitrogen to a LHV = 350 Btu/scf
3 – 20/80 ratio Tulsa natural gas to propylene diluted with nitrogen to LHV = 600 Btu/scf

**Test Series No. S3: Varying Steam Assist, 937 lb/hr Waste Gas Flow, LHV = 350 Btu/scf**

| Test Point No. | Waste Gas Flow | Waste Gas Composition | Steam/Waste Gas Ratio | Time (minutes) | Actual Exit Velocity (*) per 40 CFR 60.18 (fps) | Notes |
|---|---|---|---|---|---|---|
| S3.1 | 2 | 2 | 0 | 1 to 5 | 0.57 | |
| S3.1 to S3.2 | 2 | 2 | Incipient SP | 30* | 0.57 | *1st cycle only, less for 2nd & 3rd |
| S3.2 | 2 | 2 | < Snuff | 30* | 0.57 | |
| S3.2 to S3.3 | 2 | 2 | Linearly decrease steam from value in Test Pt. S3.2 to value in Test Pt. S3.3 | 10 | 0.57 | |
| S3.3 | 2 | 2 | 2/3 between ISP and snuff ratios | 16 | 0.57 | |
| S3.3 to S3.4 | 2 | 2 | Linearly decrease steam from value in Test Pt. S3.3 to value in Test Pt. S3.4 | 10 | 0.57 | |
| S3.4 | 2 | 2 | 1/3 between ISP and snuff ratios | 16 | 0.57 | |
| S3.4 to S3.2 | 2 | 2 | Linearly decrease steam from value in Test Pt. S3.4 to value in Test Pt. S3.2 | 10 | 0.57 | |

Test Series S3 would be repeated up 2 more times, first in reverse sequence to the above order, i.e., Test Pts. 3.2, 3.4, and 3.3, then Test Pts. 3.2, 3.3 and 3.4

(*) Exclusive of center steam

Waste Gas Flow Legend
1 – 0.25% (nominally) of flare design capacity or 2,342 lb/hr for 36 inch steam-assisted flare burner
2 – 0.1% (nominally) of flare design capacity or 937 lb/hr for 36 inch steam-assisted flare burner

Waste Gas Composition & Lower Heating Value (LHV) Legend
1 – 100% Propylene, LHV = 2,183 Btu/scf
2 – 20/80 ratio Tulsa natural gas to propylene diluted with nitrogen to a LHV = 350 Btu/scf
3 – 20/80 ratio Tulsa natural gas to propylene diluted with nitrogen to LHV = 600 Btu/scf

**Test Series No. S4: Varying Steam Assist, 2,342 lb/hr Waste Gas Flow, LHV = 350 Btu/scf**

| Test Point No. | Waste Gas Flow | Waste Gas Composition | Steam/Waste Gas Ratio | Time (minutes) | Actual Exit Velocity (*) per 40 CFR 60.18 (fps) | Notes |
|---|---|---|---|---|---|---|
| S4.1 | 1 | 2 | 0 | 1 to 5 | 1.42 | |
| S4.1 to S4.2 | 1 | 2 | Incipient SP | 30* | 1.42 | *1st cycle only, less for 2nd & 3rd |
| S4.2 | 1 | 2 | < Snuff | 30* | 1.42 | |
| S4.2 to S4.3 | 1 | 2 | Linearly decrease steam from value in Test Pt. S4.2 to value in Test Pt. S4.3 | 10 | 1.42 | |
| S4.3 | 1 | 2 | 2/3 between ISP and snuff ratios | 16 | 1.42 | |
| S4.3 to S4.4 | 1 | 2 | Linearly decrease steam from value in Test Pt. S4.3 to value in Test Pt. S4.4 | 10 | 1.42 | |
| S4.4 | 1 | 2 | 1/3 between ISP and snuff ratios | 16 | 1.42 | |
| S4.4 to S4.2 | 1 | 2 | Linearly decrease steam from value in Test Pt. S4.4 to value in Test Pt. S4.2 | 10 | 1.42 | |

Test Series S4 would be repeated 2 more times, first in reverse sequence to the above order, i.e., Test Pts. S4.2, S4.4, and S4.3, then Test Pts. S4.2, S4.3 and S4.4

(*) Exclusive of center steam

Waste Gas Flow Legend
1 – 0.25% (nominally) of flare design capacity or 2,342 lb/hr for 36 inch steam-assisted flare burner
2 – 0.1% (nominally) of flare design capacity or 937 lb/hr for 36 inch steam-assisted flare burner

Waste Gas Composition & Lower Heating Value (LHV) Legend
1 – 100% Propylene, LHV = 2,183 Btu/scf
2 – 20/80 ratio Tulsa natural gas to propylene diluted with nitrogen to a LHV = 350 Btu/scf
3 – 20/80 ratio Tulsa natural gas to propylene diluted with nitrogen to LHV = 600 Btu/scf

**Test Series No. S5: Varying Steam Assist, 937 lb/hr Waste Gas Flow, LHV = 600 Btu/scf**

| Test Point No. | Waste Gas Flow | Waste Gas Composition | Steam/Waste Gas Ratio | Time (minutes) | Actual Exit Velocity (*) per 40 CFR 60.18 (fps) | Notes |
|---|---|---|---|---|---|---|
| S5.1 | 2 | 3 | 0 | 1 to 5 | 0.55 | |
| S5.1 to S5.2 | 2 | 3 | Incipient SP | 30* | 0.55 | *1st cycle only, less for 2nd & 3rd |
| S5.2 | 2 | 3 | < Snuff | 15 | 0.55 | |
| S5.2 to S5.3 | 2 | 3 | Linearly decrease steam from value in Test Pt. S5.2 to value in Test Pt. S5.3 | 10 | 0.55 | |
| S5.3 | 2 | 3 | 2/3 between ISP and snuff ratios | 16 | 0.55 | |
| S5.3 to S5.4 | 2 | 3 | Linearly decrease steam from value in Test Pt. S5.3 to value in Test Pt. S5.4 | 10 | 0.55 | |
| S5.4 | 2 | 3 | 1/3 between ISP and snuff ratios | 16 | 0.55 | |
| S5.4 to S5.2 | 2 | 3 | Linearly decrease steam from value in Test Pt. S5.4 to value in Test Pt. S5.2 | 10 | 0.55 | |

Test Series S5 would be repeated up to 2 more times, first in reverse sequence to the above order, i.e., Test Pts. S5.2, S5.4, and S5.3, then Test Pts. S5.2, S5.3 and S5.4 (*) Exclusive of center steam

Waste Gas Flow Legend
1 – 0.25% (nominally) of flare design capacity or 2,342 lb/hr for 36 inch steam-assisted flare burner
2 – 0.1% (nominally) of flare design capacity or 937 lb/hr for 36 inch steam-assisted flare burner

Waste Gas Composition & Lower Heating Value (LHV) Legend
1 – 100% Propylene, LHV = 2,183 Btu/scf
2 – 20/80 ratio Tulsa natural gas to propylene diluted with nitrogen to a LHV = 350 Btu/scf
3 – 20/80 ratio Tulsa natural gas to propylene diluted with nitrogen to LHV = 600 Btu/scf

**Test Series No. S6: Varying Steam Assist, 2,342 lb/hr Waste Gas Flow, LHV = 600 Btu/scf**

| Test Point No. | Waste Gas Flow | Waste Gas Composition | Steam/Waste Gas Ratio | Time (minutes) | Actual Exit Velocity (*) per 40 CFR 60.18 (fps) | Notes |
|---|---|---|---|---|---|---|
| S6.1 | 1 | 3 | 0 | 1 to 5 | 1.36 | |
| S6.1 to S6.2 | 1 | 3 | Incipient SP | 30* | 1.36 | *1st cycle only, less for 2nd & 3rd |
| S6.2 | 1 | 3 | < Snuff | 15 | 1.36 | |
| S6.2 to S6.3 | 1 | 3 | Linearly decrease steam from value in Test Pt. S6.2 to value in Test Pt. S6.3 | 10 | 1.36 | |
| S6.3 | 1 | 3 | 2/3 between ISP and snuff ratios | 16 | 1.36 | |
| S6.3 to S6.4 | 1 | 3 | Linearly decrease steam from value in Test Pt. S6.3 to value in Test Pt. S6.4 | 10 | 1.36 | |
| S6.4 | 1 | 3 | 1/3 between ISP and snuff ratios | 16 | 1.36 | |
| S6.4 to S6.2 | 1 | 3 | Linearly decrease steam from value in Test Pt. S6.4 to value in Test Pt. S6.2 | 10 | 1.36 | |

Test Series S6 would be repeated up to 2 more times, first in reverse sequence to the above order, i.e., Test Pts. S6.2, S6.4, and S6.3, then Test Pts. S6.2, S6.3 and S6.4

(*) Exclusive of center steam

Waste Gas Flow Legend
1 – 0.25% (nominally) of flare design capacity or 2,342 lb/hr for 36 inch steam-assisted flare burner
2 – 0.1% (nominally) of flare design capacity or 937 lb/hr for 36 inch steam-assisted flare burner

Waste Gas Composition & Lower Heating Value (LHV) Legend
1 – 100% Propylene, LHV = 2,183 Btu/scf
2 – 20/80 ratio Tulsa natural gas to propylene diluted with nitrogen to a LHV = 350 Btu/scf
3 – 20/80 ratio Tulsa natural gas to propylene diluted with nitrogen to LHV = 600 Btu/scf

**Test Series No. A1: Varying Air Assist, 144 lb/hr Waste Gas Flow, LHV = 2,183 Btu/scf**

| Test Point No. | Waste Gas Flow | Waste Gas Composition | Air/Waste Gas Ratio | Time (minutes) | Actual Exit Velocity (*) per 40 CFR 60.18 (fps) | Notes |
|---|---|---|---|---|---|---|
| A1.1 | 2 | 1 | Incipient SP | 20 | 0.22 | |
| A1.1 to A1.2 | 2 | 1 | Increase air from value in Test Pt. A1.1 to value for Test Pt. A1.2 | * | 0.22 | *As Needed |
| A1.2 | 2 | 1 | < Snuff | 20 | 0.22 | |

**Test Series No. A2: Varying Air Assist, 359 lb/hr Waste Gas Flow, LHV = 2,183 Btu/scf**

| Test Point No. | Waste Gas Flow | Waste Gas Composition | Air/Waste Gas Ratio | Time (minutes) | Actual Exit Velocity (*) per 40 CFR 60.18 (fps) | Notes |
|---|---|---|---|---|---|---|
| A2.1 | 1 | 1 | Incipient SP | 20 | 0.54 | |
| A2.1 to A2.2 | 1 | 1 | Increase air from value in Test Pt. A2.1 to value for Test Pt. A2.2 | * | 0.54 | *As Needed |
| A2.2 | 1 | 1 | < Snuff | 20 | 0.54 | |

Test Series A1 and A2 would be repeated up to 2 more times.

(*) Exclusive of air assist

Waste Gas Flow Legend
1 – 0.25% (nominally) of flare design capacity or 359 lb/hr for 24 inch steam-assisted flare burner
2 – 0.1% (nominally) of flare design capacity or 144 lb/hr for 24 inch steam-assisted flare burner

Waste Gas Composition & Lower Heating Value (LHV) Legend
1 – 100% Propylene, LHV = 2,183 Btu/scf
2 – 20/80 ratio Tulsa natural gas to propylene diluted with nitrogen to a LHV = 350 Btu/scf
3 – 20/80 ratio Tulsa natural gas to propylene diluted with nitrogen to LHV = 600 Btu/scf

# If Time & Budget Permit

**Test Series No. A3: Varying Air Assist, 359 lb/hr Waste Gas Flow, LHV = 350 Btu/scf**

| Test Point No. | Waste Gas Flow | Waste Gas Composition | Air/Waste Gas Ratio | Time (minutes) | Actual Exit Velocity (*) per 40 CFR 60.18 (fps | Notes |
|---|---|---|---|---|---|---|
| A3.1 | 1 | 2 | 0 | 1 to 5 | 0.77 | |
| A3.1 to A3.2 | 1 | 2 | Incipient SP | 30* | 0.77 | *1st cycle only, less for 2nd & 3rd |
| A3.2 | 1 | 2 | < Snuff | 15 | 0.77 | |
| A3.2 to A3.3 | 1 | 2 | Linearly decrease air from value in Test Pt. A3.2 to value in Test Pt. A3.3 | 10 | 0.77 | |
| A3.3 | 1 | 2 | 2/3 between ISP and snuff ratios | 16 | 0.77 | |
| A3.3 to A3.4 | 1 | 2 | Linearly decrease air from value in Test Pt. A3.3 to value in Test Pt. A3.4 | 10 | 0.77 | |
| A3.4 | 1 | 2 | 1/3 between ISP and snuff ratios | 16 | 0.77 | |
| A3.4 to A3.2 | 1 | 2 | Linearly decrease air from value in Test Pt. A3.4 to value in Test Pt. A3.2 | 10 | 0.77 | |

Test Series A3 would be repeated up to 2 more times, first in reverse sequence to the above order, i.e., Test Pts. A3.2, A3.4, and A3.3, then Test Pts. A3.2, A3.3 and A3.4 (*) Exclusive of air assist

Waste Gas Flow Legend
1 – 0.25% (nominally) of flare design capacity or 359 lb/hr for 24 inch air-assisted flare burner
2 – 0.1% (nominally) of flare design capacity or 144 lb/hr for 24 inch air-assisted flare burner

Waste Gas Composition & Lower Heating Value (LHV) Legend
1 – 100% Propylene, LHV = 2,183 Btu/scf
2 – 20/80 ratio Tulsa natural gas to propylene diluted with nitrogen to a LHV = 350 Btu/scf
3 – 20/80 ratio Tulsa natural gas to propylene diluted with nitrogen to LHV = 600 Btu/scf

# If Time & Budget Permit

**Test Series No. A4: Varying Air Assist, 359 lb/hr Waste Gas Flow, LHV = 600 Btu/scf**

| Test Point No. | Waste Gas Flow | Waste Gas Composition | Air/Waste Gas Ratio | Time (minutes) | Actual Exit Velocity (*) per 40 CFR 60.18 (fps) | Notes |
|---|---|---|---|---|---|---|
| A4.1 | 1 | 3 | 0 | 1 to 5 | 0.74 | |
| A4.1 to A4.2 | 1 | 3 | Incipient SP | 30* | 0.74 | *1st cycle only, less for 2nd & 3rd |
| A4.2 | 1 | 3 | < Snuff | 15 | 0.74 | |
| A4.2 to A4.3 | 1 | 3 | Linearly decrease air from value in Test Pt. A4.2 to value in Test Pt. A4.3 | 10 | 0.74 | |
| A4.3 | 1 | 3 | 2/3 between ISP and snuff ratios | 16 | 0.74 | |
| A4.3 to A4.4 | 1 | 3 | Linearly decrease air from value in Test Pt. A4.3 to value in Test Pt. A4.4 | 10 | 0.74 | |
| A4.4 | 1 | 3 | 1/3 between ISP and snuff ratios | 16 | 0.74 | |
| A4.4 to A4.2 | 1 | 3 | Linearly decrease air from value in Test Pt. A4.4 to value in Test Pt. A4.2 | 10 | 0.74 | |

Test Series A4 would be repeated up to 2 more times, first in reverse sequence to the above order, i.e., Test Pts. A4.2, A4.4, and A4.3, then Test Pts. A4.2, A4.3 and A4.4 (*) Exclusive of air assist

Waste Gas Flow Legend
1 – 0.25% (nominally) of flare design capacity or 359 lb/hr for 24 inch air-assisted flare burner
2 – 0.1% (nominally) of flare design capacity or 144 lb/hr for 24 inch air-assisted flare burner

Waste Gas Composition & Lower Heating Value (LHV) Legend
1 – 100% Propylene, LHV = 2,183 Btu/scf
2 – 20/80 ratio Tulsa natural gas to propylene diluted with nitrogen to a LHV = 350 Btu/scf
3 – 20/80 ratio Tulsa natural gas to propylene diluted with nitrogen to LHV = 600 Btu/scf

# If Time & Budget Permit

**Test Series No. A5: Varying Air Assist, 144 lb/hr Waste Gas Flow, LHV = 350 Btu/scf**

| Test Point No. | Waste Gas Flow | Waste Gas Composition | Air/Waste Gas Ratio | Time (minutes) | Actual Exit Velocity (*) per 40 CFR 60.18 (fps) | Notes |
|---|---|---|---|---|---|---|
| A5.1 | 2 | 2 | 0 | 1 to 5 | 0.31 | |
| A5.1 to A5.2 | 2 | 2 | Incipient SP | 30* | 0.31 | *1st cycle only, less for 2nd & 3rd |
| A5.2 | 2 | 2 | < Snuff | 15 | 0.31 | |
| A5.2 to A5.3 | 2 | 2 | Linearly decrease air from value in Test Pt. A5.2 to value in Test Pt. A5.3 | 10 | 0.31 | |
| A5.3 | 2 | 2 | 2/3 between ISP and snuff ratios | 16 | 0.31 | |
| A5.3 to A5.4 | 2 | 2 | Linearly decrease air from value in Test Pt. A5.3 to value in Test Pt. A5.4 | 10 | 0.31 | |
| A5.4 | 2 | 2 | 1/3 between ISP and snuff ratios | 16 | 0.31 | |
| A5.4 to A5.2 | 2 | 2 | Linearly decrease air from value in Test Pt. A5.4 to value in Test Pt. A5.2 | 10 | 0.31 | |

Test Series A5 would be repeated up to 2 more times, first in reverse sequence to the above order, i.e., Test Pts. A5.2, A5.4, and A5.3, then Test Pts. A5.2, A5.3 and A5.4 (*) Exclusive of air assist

Waste Gas Flow Legend
1 – 0.25% (nominally) of flare design capacity or 359 lb/hr for 24 inch air-assisted flare burner
2 – 0.1% (nominally) of flare design capacity or 144 lb/hr for 24 inch air-assisted flare burner

Waste Gas Composition & Lower Heating Value (LHV) Legend
1 – 100% Propylene, LHV = 2,183 Btu/scf
2 – 20/80 ratio Tulsa natural gas to propylene diluted with nitrogen to a LHV = 350 Btu/scf
3 – 20/80 ratio Tulsa natural gas to propylene diluted with nitrogen to LHV = 600 Btu/scf

# If Time & Budget Permit

**Test Series No. A6: Varying Air Assist, 144 lb/hr Waste Gas Flow, LHV = 600 Btu/scf**

| Test Point No. | Waste Gas Flow | Waste Gas Composition | Air/Waste Gas Ratio | Time (minutes) | Actual Exit Velocity per 40 CFR (*) 60.18 (fps | Notes |
|---|---|---|---|---|---|---|
| A6.1 | 2 | 3 | 0 | 1 to 5 | 0.30 | |
| A6.1 to A6.2 | 2 | 3 | Incipient SP | 30* | 0.30 | *1st cycle only, less for 2nd & 3rd |
| A6.2 | 2 | 3 | < Snuff | 15 | 0.30 | |
| A6.2 to A6.3 | 2 | 3 | Linearly decrease air from value in Test Pt. A6.2 to value in Test Pt. A6.3 | 10 | 0.30 | |
| A6.3 | 2 | 3 | 2/3 between ISP and snuff ratios | 16 | 0.30 | |
| A6.3 to A6.4 | 2 | 3 | Linearly decrease air from value in Test Pt. A6.3 to value in Test Pt. A6.4 | 10 | 0.30 | |
| A6.4 | 2 | 3 | 1/3 between ISP and snuff ratios | 16 | 0.30 | |
| A6.4 to A6.2 | 2 | 3 | Linearly decrease air from value in Test Pt. A6.4 to value in Test Pt. A6.2 | 10 | 0.30 | |

Test Series A6 would be repeated up to 2 more times, first in reverse sequence to the above order, i.e., Test Pts. A6.2, A6.4, and A6.3, then Test Pts. A6.2, A6.3 and A6.4 (*) Exclusive of air assist

Waste Gas Flow Legend
1 – 0.25% (nominally) of flare design capacity or 359 lb/hr for 24 inch air-assisted flare burner
2 – 0.1% (nominally) of flare design capacity or 144 lb/hr for 24 inch air-assisted flare burner

Waste Gas Composition & Lower Heating Value (LHV) Legend
1 – 100% Propylene, LHV = 2,183 Btu/scf
2 – 20/80 ratio Tulsa natural gas to propylene diluted with nitrogen to a LHV = 350 Btu/scf
3 – 20/80 ratio Tulsa natural gas to propylene diluted with nitrogen to LHV = 600 Btu/scf

# APPENDIX E

# Flare Test Plan Modification Process

The process presented in this appendix describes how the flare test plan activities at the Zink facility will be addressed if there is any issue that may necessitate a change in the flare tests series in-process or in a future flare test that will be conducted for the Comprehensive Flare Study Project.

# APPENDIX E

Test Plan Modification Process

This process is to be used any time a change in the flare test plan is to be considered. When the UT Project Manager (Vincent Torres) determines a change to the flare test plan should be considered, the Lead TCEQ project sponsor (Russ Nettles) will be informed of the change being considered. The final decision to modify the flare test plan will ultimately rest with the lead TCEQ project sponsor or his designee.

Step 1: The lead TCEQ project sponsor will inform UT project manager of the decision that the topic/change has merit and what immediate action should be taken if it affects a test series in progress.

Step 2: The UT Project Manager shall call a meeting of the Project Lead Team. The members of this team will include at least one representative from each entity participating in the project, including at least one representative from the TCEQ Technical Review Panel, if present.

Step 3: The University of Texas Project Manager will inform all participants of the suggested flare test plan change. The impact of the proposed change will then be discussed amongst the members of the Project Lead Team to determine the next step. Once the lead TCEQ project sponsor (or his designee) has made a decision, the UT Project Manager will inform all project participants of the decision to revise the flare test plan and when the change will be implemented.

All of the above referenced steps will be documented for inclusion in the final project report.

# APPENDIX F

# Quality Assurance Steps for the Aerodyne Measurements

The description presented in this appendix is the analytical method quality assurance documentation provided by Aerodyne Research, Inc., which will be making the in situ flare flue gas measurements for the Comprehensive Flare Study Project.

***Aerodyne Mobile Laboratory Analysis, Quality Assurance and Quality Control***

ARI has extensive experience with quality assurance (QA) and quality control (QC) plans and procedures to ensure that real-time trace gas and fine particulate data taken to characterize and quantify industrial emission plumes are adequately recorded, quality assured, and archived for final analysis. ARI's QA/QC procedures have been utilized in dozens of ARI's peer reviewed scientific articles reporting data from the real-time instruments and have been adopted by laboratories using these instruments worldwide, including research teams in government laboratories run by the USEPA, NSF, NOAA, DOE, and NASA. The researchers named below have had experience with reviewing and approving the plans and data generated on several campaigns in the last decade.

***References:*** Dr. Kenneth L. Demerjian, (Director, Atmospheric Research Center, University of Albany, 518-437-8705, kld@asrc.cestm.albany.edu); Dr. Bruce E.Anderson, NASA Langley Research Center, 757-864-5850, b.e.anderson@larc.nasa.gov)

***Quality Assurance and Quality Control (QA/QC)***

With the exception of whole air samples taken to assess emission plume VOC concentrations, the mobile lab will utilize only real time methods, and there will be no other traditional grab sample collections and analyses. QA procedures for real time instrumentation involve inspection of the fundamental measurement data (infrared spectra, mass spectra, etc.) to assure detection of target species and computation of the average and statistical variance for each species measurement. Data will be evaluated based on computed statistical significance and flagged as robust and reliable, questionable, and/or unreliable. QA assessments will be made by doctoral level scientists with extensive experience in real time instrumentation. The initial raw data sources will be available to anyone working on the project and will be used to compute the DRE, however analysis of the detailed VOC profile and other parameters will be used to refine those calculations after the campaign. It will be a high priority of the research team to assess (in near real time) the approximate DRE being measured in order to ensure that overall goals of the test are being met.

Analysis of absolute species concentration requires calibration of instruments during the field campaign. Each real-time instrument operates on different physical principles; however, they all require established baselines for quantitative measurement. True "no signal" baselines are established periodically by introducing air with no pollution ("zero air") into the mobile lab sampling manifold. Background ambient air and plume pollutant levels are measured from the zero air baseline. Each instrument can then be calibrated by introducing known levels of gaseous or particulate matter species into the sampling manifold. In the case of the major trace gases (NO, CO and $CO_2$), calibration gas cylinders with known trace gas levels, traceable to National Institute of Standards and Technology (NIST) standards, are used for absolute calibration. Calibrations are periodically performed using calibration gas cylinders carried onboard the mobile lab. Some commercial instruments have standard calibration procedures prescribed by their manufacturers that will be implemented during the field campaign. The calibration schedule will vary according to the instrument. For example, the

commercial trace gas instrument calibrations have proven to be very stable in previous field measurements, and will be made at the beginning of the measurement campaign and then checked every two to three days.

Data from real-time instruments is collected in real-time by their control computers and stored on hard drives that are interfaced to the mobile lab's computer network. The data stored on the mobile laboratory hard drives are periodically backed up to removable hard drives and can also be downloaded to ARI's servers if a robust internet connection is available.

# APPENDIX G

# Measurement Data Quality Objectives

The spreadsheet in this appendix presents all the Comprehensive Flare Study Project measurements data quality objectives by the measurement location at the ZINK facility.

# APPENDIX G
# Measurement Data Quality Objectives

| Measurement Location | Parameter/Instrument | Species Measured/Units | Detection Limit | Precision | Accuracy | Company |
|---|---|---|---|---|---|---|
| Flare Flue Gas | Pulsed Quantum Cascade Tunable Infrared Laser Differential Absorption Spectrometer (QC-TILDAS) | CO (Carbon Monoxide)/ ppt | 600 ppt (1-second) | 300 ppt (1-s rms) | 4% | Aerodyne |
| Flare Flue Gas | QC-TILDAS | $NO_2$ (Nitrogen Dioxide)/ ppt | 700 ppt (1 second) | 350 ppt (1-s rms) | 5% | Aerodyne |
| Flare Flue Gas | QC-TILDAS | HCHO (Formaldehyde),$CH_3CHO$( acetaldehyde) $HC_2H$(Acetylene)/ ppt | 700 ppt (1 second) | 350 ppt (1-s rms) | 6% | Aerodyne |
| Flare Flue Gas | QC-TILDAS | HCOOH (Formic Acid)/ ppb | 1 ppb (1 second) | 500 ppt (1-s rms) | 8% | Aerodyne |
| Flare Flue Gas | QC-TILDAS | $CH_4$(Methane),$C_2H_4$ (Ethylene),$C_3H_6$ (Propylene)/ ppb | 7 ppb (1 second) | 3.5 ppb (1-s rms) | 4% | Aerodyne |
| Flare Flue Gas | ThermoElectron 42i | NO (Niitrogen Oxide)/ ppb | 0.4 ppb (1 second) | 0.2 ppb (1-s rms) | 5% | Aerodyne |
| Flare Flue Gas | LiCor | $CO_2$ (Carbon Dioxide)/ ppb | 0.7 ppm (1 second) | 350 ppb (1-s rms) | 5% | Aerodyne |
| Flare Flue Gas | 2B Tech 205 | $O_3$ (Ozone)/ ppb | 1 ppb (2 second) | 0.5 ppb (2-s rms) | 2% | Aerodyne |
| Flare Flue Gas | Auto GC | EPA TO-14 Analytes | 3 ppb | 0.5 ppb | 1% | Aerodyne |
| Flare Flue Gas | PTR-MS | Oxygenated/Aromatic and selected olefinic VOC/ ppb | 0.2 - 6 ppb (1 second) | 0.1 - 3 ppb (1-s rms) | 20% | Aerodyne |
| Flare Flue Gas | Aerosol Mass Spectrometer | Size-resolved chemical composition and mass loadings of PM1/ $ng/m_3$ | 100 ng/m3, 30 - 800 nm (10 s) | N/A | 12% | Aerodyne |
| Flare Flue Gas | Multi-Angle Absorption Photometer (MAAP) | Black Carbon/ $\mu g/m^3$ | 5 µg/m3 (1.5 s) | 5 µg/m3 (1.5 s) | 15% | Aerodyne |
| Flare Flue Gas | Scanning Mobility Particle Sizer (SMPS) | PM Size Distribution nm | 15 - 600 nm ( 1 min) | N/A | mode uncertainty depends on distribution | Aerodyne |
| Flare Flue Gas | Condensate Particle Counter (CPC) | Particle Number ($D_p$>7nm)/ nm | 7 nm - 2.5 µm | N/A | 2% reading | Aerodyne |

# APPENDIX G
# Measurement Data Quality Objectives

| Measurement Location | Parameter/Instrument | Species Measured/Units | Detection Limit | Precision | Accuracy | Company |
|---|---|---|---|---|---|---|
| Flare Flue Gas | Dustrak | Particle Mass (80 nm < $D_p$ < 2.5 µm)/ ng/$m^3$ | 50 ng/m3 (60 s) | Zero Stability 2 ng/m3 | 15% | Aerodyne |
| Flare Test Facility | Meteorology | Wind Speed/ mph | 0.2 m/s | 0.1 m/s | 5% | Aerodyne |
| Flare Test Facility | Meteorology | Wind Direction/ ° azimuth | 1º | 0.5 º | 5% | Aerodyne |
| Flare Test Facility | Meteorology | Ambient Temperature/ °F | NA | 0.2 degree (1 sec) | 5% | Aerodyne |
| Flare Test Facility | Meteorology | Relative Humidity/ % | NA | 1% RH | 5% | Aerodyne |
| Flare Test Facility | Meteorology | Barametric Pressure/ mmHg | NA | 0.5 Torr | 3% | Aerodyne |
| Flare Flue Gas | TECO 55C | TNMHC | 3 ppb | ± 15% | ± 20 %, monitor | Aerodyne |
| Flare Stack | Gas Chromatograph (GC) | concentrations of methane in flare gas/ ppmV | 0.01 % (100 ppmv) | 5% | ±200 ppmv | TRC |
| Flare Flue Gas | Gas Chromatograph (GC) | concentrations of methane in flare plume/ ppmV | 0.01 % (100 ppmv) | 5% | ±200 ppmv | TRC |
| Flare Stack | Gas Chromatograph (GC) | concentrations of ethane in flare gas/ ppmV | 0.01 % (100 ppmv) | 5% | ±200 ppmv | TRC |
| Flare Flue Gas | Gas Chromatograph (GC) | concentrations of ethane in flare plume/ ppmV | 0.01 % (100 ppmv) | 5% | ±200 ppmv | TRC |
| Flare Stack | Gas Chromatograph (GC) | concentrations of propylene in flare gas/ ppm | 0.01 % (100 ppmv) | 5% | ±200 ppmv | TRC |
| Flare Flue Gas | Gas Chromatograph (GC) | concentrations of propylene in flare plume/ ppm | 0.01 % (100 ppmv) | 5% | ±200 ppmv | TRC |
| | Calculation | mass emission rates/ lb/hr | N/A | 5% | 5% | TRC |
| Flare Test Facility | Meteorology | Wind Speed/ mph | 2.2 mph | 0.5 mph | ± 0.6 mph | John Zink Co. LLC |
| Flare Test Facility | Meteorology | Wind Direction/ ° Azimuth | 1° | 0.5° | ± 3° | John Zink Co. LLC |
| Flare Test Facility | Meteorology | Ambient Temperature/ ° F | N/A | N/A | ± 0.54°F | John Zink Co. LLC |

# APPENDIX G
# Measurement Data Quality Objectives

| Measurement Location | Parameter/Instrument | Species Measured/Units | Detection Limit | Precision | Accuracy | Company |
|---|---|---|---|---|---|---|
| Flare Test Facility | Meteorology | Relative Humidity/ % | 1% | 1% per year | ± 2% | John Zink Co. LLC |
| Flare Test Facility | Meteorology | Barametric Pressure/ psia | ± 0.005 psi | ± 0.001 psi | ± 0.008 psia | John Zink Co. LLC |
| Flare System | Orifice Plate | Propylene Flow/ lb/hr | N/A | N/A | ± 27 Lb/hr | John Zink Co. LLC |
| Flare System | Orifice Plate | Natural Gas Flow/ lb/hr | N/A | N/A | ± 1 Lb/hr | John Zink Co. LLC |
| Flare System | Orifice Plate | $N_2$ (Nitrogen) Flow/ lb/hr | N/A | N/A | ± 19 Lb/hr | John Zink Co. LLC |
| Flare System | Pressure Transmitter | Pilot Gas Pressure/ Psig | N/A | N/A | ± 0.158 Psig | John Zink Co. LLC |
| Flare System | Ultrasonic Flow Meter | Total Steam Flow/ lb/hr | 0.1 Ft/sec | ± 0.2% of reading | ± 0.2% of reading * | John Zink Co. LLC |
| Flare System | Thermocouple | Center Steam Temperature/ °F | N/A | ± 0.18 °F | ± 2.7 °F | John Zink Co. LLC |
| Flare System | Pressure Transmitter | Center Steam Pressure/ Psig | N/A | | ± 0.158 Psig | John Zink Co. LLC |
| Flare System | Thermocouple | Upper Ring Steam Temperature/ °F | N/A | ± 0.18 °F | ± 2.7 °F | John Zink Co. LLC |
| Flare System | Pressure Transmitter | Upper ring pressure/ Psia | N/A | N/A | ± 0.158 Psig | John Zink Co. LLC |
| Flare System | Thermal Mass Flow Meter | Air Flow/ lb/hr | N/A | ± 184 Lb/hr | ± (1.3% of reading + 459) Lb/hr | John Zink Co. LLC |
| Flare System | Thermocouple | Mixed Fuel Temperature/ °F | N/A | ± 0.18 °F | ± 2.7 °F | John Zink Co. LLC |
| Flare System | Thermocouple | Flare Flue Gas Temperature/ °F | N/A | ± 0.18 °F | ± 2.7 °F | John Zink Co. LLC |
| Flare Flue Gas | I-FTIR | Butane | 20 ppm*m | 7 ppm*m | 7 ppm*m | Telops |
| Flare Flue Gas | I-FTIR | Ethylene | 0.5 ppm*m | 0.2 ppm*m | 0.2 ppm*m | Telops |
| Flare Flue Gas | I-FTIR | Propylene | 2 ppm*m | 0.7 ppm*m | 0.7 ppm*m | Telops |
| Flare Flue Gas | I-FTIR | Formaldehyde | 20 ppm*m | 7 ppm*m | 7 ppm*m | Telops |
| Flare Flue Gas | I-FTIR | Formic Acid | 0.4 ppm*m | 0.1 ppm*m | 0.1 ppm*m | Telops |
| Flare Flue Gas | I-FTIR | $CO_2$ (Carbon Dioxide) | 4000 ppm*m | 1000 ppm*m | 1000 ppm*m | Telops |
| Flare Flue Gas | I-FTIR | $H_20$ | 3000 ppm*m | 1000 ppm*m | 1000 ppm*m | Telops |
| Flare Flue Gas | I-FTIR | $O_3$ (Ozone) | 2 ppm*m | 0.7 ppm*m | 0.7 ppm*m | Telops |
| Flare Flue Gas | I-FTIR | $SO_2$ (Sulfur Dioxide) | 20 ppm*m | 7 ppm*m | 7 ppm*m | Telops |
| Flare Flue Gas | A-FTIR | $CO_2$(Carbon Dioxide) | 1 ppm | ~5% | ±15% | IMACC |

# APPENDIX G
# Measurement Data Quality Objectives

| Measurement Location | Parameter/Instrument | Species Measured/Units | Detection Limit | Precision | Accuracy | Company |
|---|---|---|---|---|---|---|
| Flare Flue Gas | A-FTIR | Acetylene | 1 ppm | ~5% | ±15% | IMACC |
| Flare Flue Gas | A-FTIR | CO (Carbon Monoxide) | 0.1 ppm | ~5% | ±15% | IMACC |
| Flare Flue Gas | A-FTIR | Plume Temperature | 100° C | ± 10° C | ± 50°C | IMACC |
| Flare Flue Gas | A-FTIR | Hydrocarbon Continuum | 1 ppm | ~5% | ±15% | IMACC |
| Flare Flue Gas | A-FTIR | Isobutane | 0.2 ppm | ~5% | ±15% | IMACC |
| Flare Flue Gas | A-FTIR | Methane | 1 ppm | ~5% | ±15% | IMACC |
| Flare Flue Gas | A-FTIR | Ethane | 1 ppm | ~5% | ±15% | IMACC |
| Flare Flue Gas | A-FTIR | Propane | 1 ppm | ~5% | ±15% | IMACC |
| Flare Flue Gas | A-FTIR | Butane | 0.5 ppm | ~5% | ±15% | IMACC |
| Flare Flue Gas | A-FTIR | $H_2O$ (Water ) | ambient | ~5% | ±15% | IMACC |
| Flare Flue Gas | A-FTIR | Propylene | 0.4 ppm | ~5% | ±15% | IMACC |
| Flare Flue Gas | P-FTIR | Acetylene | 5 ppm | Not Available | Not Available | IMACC |
| Flare Flue Gas | P-FTIR | Plume Temperature | 100° C | ± 10° C | ± 50°C | IMACC |
| Flare Flue Gas | P-FTIR | CO (Carbon Monoxide) | 0.5 ppm | Not Available | Not Available | IMACC |
| Flare Flue Gas | P-FTIR | $CO_2$ (Carbon Dioxide | 0.5 ppm | Not Available | Not Available | IMACC |
| Flare Flue Gas | P-FTIR | Ethane | 2 ppm | Not Available | Not Available | IMACC |
| Flare Flue Gas | P-FTIR | Hydrocarbon Continuum | 2 ppm | Not Available | Not Available | IMACC |
| Flare Flue Gas | P-FTIR | Isobutane | 0.45 ppm | Not Available | Not Available | IMACC |
| Flare Flue Gas | P-FTIR | Methane | 2 ppm | Not Available | Not Available | IMACC |
| Flare Flue Gas | P-FTIR | Ethane | 2 ppm | Not Available | Not Available | IMACC |
| Flare Flue Gas | P-FTIR | Propane | 2 ppm | Not Available | Not Available | IMACC |
| Flare Flue Gas | P-FTIR | $H_2O$ (Water ) | ambient | Not Available | Not Available | IMACC |
| Flare Flue Gas | P-FTIR | Propylene | 0.9 ppm | Not Available | Not Available | IMACC |

# APPENDIX H

# Measurement Data Quality Control Activities

The spreadsheet in this appendix presents all the Comprehensive Flare Study Project measurement data quality activities by the company that will be making the measurement at the ZINK facility.

# APPENDIX H
# Measurement Data Quality Control Activities

| Company | Parameter/Instrument | Species Measured/Units | Calibration Frequency | Acceptance Criteria | Corrective Action |
|---|---|---|---|---|---|
| Aerodyne | Pulsed Quantum Cascade Tunable Infrared Laser Differential Absorption Spectrometer (QC-TILDAS) | CO (Carbon Monoxide)/ ppt | 3 days | Retrievals from reference cell within 10% of prior calibration values | Realign optical table and recalibrate until performance is met |
| Aerodyne | QC-TILDAS | $NO_2$ (Nitrogen Dioxide)/ ppt | 3 days | Retrievals from reference cell for NO2 not always reliable, systematic problems in measurement show in CO channel first | NO2 requires a calibration from the NOx box ozonizer and dynamic dilution system (2 hrs) |
| Aerodyne | QC-TILDAS | HCHO (Formaldehyde),$CH_3CHO$( acetaldehyde)/ ppt | 3 days | If 1 s rms is less than 1.5 ppb | alignment for fringe reduction |
| Aerodyne | QC-TILDAS | HCOOH (Formic Acid)/ ppb | 3 days | HCOOH is 'chained' to HCHO criteria | |
| Aerodyne | QC-TILDAS | $CH_4$(Methane),$C_2H_4$ (Ethylene),$C_3H_6$ (Propylene)/ ppb | before and after campaign | Retrievals from reference cell within 10% of prior calibration values | Realign optical table and recalibrate until performance is met |
| Aerodyne | ThermoElectron 42i | NO (Nitric Oxide)/ ppb | 3 days | 1 s RMS of 0.5 ppbv | pull unit off main sample line and calibrate and diagnose problem |
| Aerodyne | LiCor | $CO_2$ (Carbon Dioxide)/ ppb | twice daily | If zero air overblow is within 2 ppm of 'zero' | purge unit with zero air, map pressure dependance, reset the zero level and recalibrate |
| Aerodyne | 2B Tech 205 | $O_3$ (Ozone)/ ppb | annual | 1 s RMS of 2 ppb | analyze both optical legs to ensure proper instrument function |
| Aerodyne | Auto GC | ~60 Hydrocarbons | daily | ±2 ppb | Recalibrate GC at more frequent intervals |

# APPENDIX H
# Measurement Data Quality Control Activities

| Company | Parameter/Instrument | Species Measured/Units | Calibration Frequency | Acceptance Criteria | Corrective Action |
|---|---|---|---|---|---|
| Aerodyne | PTR-MS | Oxygenated/Aromatic and selected olefinic VOC/ ppb | daily | Ratio of O2+/H3O+ less than 1e5 and consistency of efficiency factors between calibrations | diagnose and correct problem in the ion source, recalibrate and verify efficiency factors |
| Aerodyne | Aerosol Mass Spectrometer | Size-resolved chemical composition and mass loadings of PM1/ ng/$m_3$ | nitrate equivalent ionization efficiency determined 3 days) | instrument flow; ionization efficiency > 1e6 | flow: clean pinhole; EI: installe new MCP |
| Aerodyne | Multi-Angle Absorption Photometer (MAAP) | Black Carbon/ µg/$m^3$ | accuracy depends on cross section assumption | filter tape advancing properly; dynamically calculated values match front face readout | reassemble the filter stage; clean detectors |
| Aerodyne | Scanning Mobility Particle Sizer (SMPS) | PM Size Distribution nm | calibrated polystyrene spheres before and after test | integrated signal counts within 20% of total CPC measurement | determine whether line/plumbing is causing discrepancy and fix |
| Aerodyne | Condensate Particle Counter (CPC) | Particle Number ($D_p$>7nm)/ nm | particle filter (zero checks) 30 mins | < 10 counts at zero | disassemble the housing and purge dry air through the condensation chamber to clean excess butanol from the optics |
| Aerodyne | Dustrak | Particle Mass (80 nm < $D_p$ < 2.5 µm)/ ng/$m^3$ | factory | NA | |
| Aerodyne | Meteorology | Wind Speed/ mph | Arrive on site | ± 5% | Repair and/or replace device |
| Aerodyne | Meteorology | Wind Direction/ ° azimuth | Arrive on site | ± 3° | Repair and/or replace device |
| Aerodyne | Meteorology | Ambient Temperature/ °F | Arrive on site | ± 0.5° | Repair and/or replace device |
| Aerodyne | Meteorology | Relative Humidity/ % | Arrive on site | ± 3% | Repair and/or replace device |

# APPENDIX H
# Measurement Data Quality Control Activities

| Company | Parameter/Instrument | Species Measured/Units | Calibration Frequency | Acceptance Criteria | Corrective Action |
|---|---|---|---|---|---|
| Aerodyne | Meteorology | Barametric Pressure/ mmHg | | verify zero and weather service barometric pressure to 1 Torr | return unit for calibration at factory |
| Aerodyne | TECO 55C | TNMHC | Daily | ± 15% difference | Recalibrate GC at more frequent intervals |
| TRC | Gas Chromatograph (GC) | concentrations of methane in flare gas/ ppmV | Daily | Calibration curves must match within 5% | Recalibrate GC at more frequent intervals |
| TRC | Gas Chromatograph (GC) | concentrations of ethane in flare gas/ ppmV | Daily | Calibration curves must match within 5% | Recalibrate GC at more frequent intervals |
| TRC | Gas Chromatograph (GC) | concentrations of propylene in flare gas/ ppm | Daily | Calibration curves must match within 5% | Recalibrate GC at more frequent intervals |
| John Zink Co. LLC | Meteorology | Wind Speed/ mph | Once per year | ± 5% of target | Repair and/or replace device |
| John Zink Co. LLC | Meteorology | Wind Direction/ ° Azimuth | Once per year | ± 3° of target | Repair and/or replace device |
| John Zink Co. LLC | Meteorology | Ambient Temperature/ ° F | Once per year | ± 0.5° of target | Repair and/or replace device |
| John Zink Co. LLC | Meteorology | Relative Humidity/ % | Once per year | ± 3% of target | Repair and/or replace device |
| John Zink Co. LLC | Meteorology | Barametric Pressure/ mmHg | Once per year | ± 3mb of target | Repair and/or replace device |
| John Zink Co. LLC | Orifice Plate | Propylene Flow/ lb/hr | Once 1 month prior to test | LHVGC should equal LHVflow meters ± 10%. | Replace device |
| John Zink Co. LLC | Orifice Plate | Natural Gas Flow/ lb/hr | Once 1 month prior to test | LHVGC should equal LHVflow meters ± 10%. | Replace device |
| John Zink Co. LLC | Orifice Plate | $N_2$ (Nitrogen) Flow/ lb/hr | Once 1 month prior to test | LHVGC should equal LHVflow meters ± 10%. | Replace device |
| John Zink Co. LLC | Pressure Transmitter | Pilot Gas Pressure/ Psig | Once 1 month prior to test | ± 2 Psig of target | Replace device |
| John Zink Co. LLC | Ultrasonic Flow Meter | Steam Flow/ lb/hr | 3rd Party Calibration prior to test | 10% of target | Replace device |
| John Zink Co. LLC | Thermocouple | Center Steam Temperature/ °F | Once 1 month prior to test | 10% of target | Replace device |
| John Zink Co. LLC | Pressure Transmitter | Center Steam Pressure/ Psig | Once 1 month prior to test | 10% of target | Replace device |

# APPENDIX H
# Measurement Data Quality Control Activities

| Company | Parameter/Instrument | Species Measured/Units | Calibration Frequency | Acceptance Criteria | Corrective Action |
|---|---|---|---|---|---|
| John Zink Co. LLC | Thermocouple | Upper Ring Steam Temperature/ °F | Once 1 month prior to test | ± 5°F of target | Replace device |
| John Zink Co. LLC | Pressure Transmitter | Upper ring pressure/ Psig | Once 1 month prior to test | ± 2 Psig of target | Replace device |
| John Zink Co. LLC | Thermal Mass Flow Meter | Air Flow/ lb/hr | Calibration by manufacturer prior to test | 10% of target | Replace device |
| John Zink Co. LLC | World Clock | Time/ DST (local watch) | Daily | ± 2 sec | Replace device |
| John Zink Co. LLC | Thermocouple | Mixed Fuel Temperature/ °F | Once 1 month prior to test | ± 5°F of target | Replace device |
| John Zink Co. LLC | Thermocouple | Flare Plume Temperature/ °F | Once 1 month prior to test | > 200°F of target | Replace device |
| IMACC | A-FTIR | Acetylene | Min. once/day | C/E>2 | Recalibrate |
| IMACC | A-FTIR | CO (Carbon Monoxide) | Min. once/day | C/E>2 | Recalibrate |
| IMACC | A-FTIR | Ethane | Min. once/day | C/E>2 | Recalibrate |
| IMACC | A-FTIR | Hydrocarbon Continuum | Min. once/day | C/E>2 | Recalibrate |
| IMACC | A-FTIR | $CO_2$ (Carbon Dioxide) | Min. once/day | C/E>2 | Recalibrate |
| IMACC | A-FTIR | Isobutane | Min. once/day | C/E>2 | Recalibrate |
| IMACC | A-FTIR | Methane | Min. once/day | C/E>2 | Recalibrate |
| IMACC | A-FTIR | Plume Temperature | Min. once/day | C/E>2 | Recalibrate |
| IMACC | A-FTIR | Butane | Min. once/day | C/E>2 | Recalibrate |
| IMACC | A-FTIR | $H_2O$ (Water) | Min. once/day | C/E>2 | Recalibrate |
| IMACC | A-FTIR | Propane | Min. once/day | C/E>2 | Recalibrate |
| IMACC | A-FTIR | Propylene | Min. once/day | C/E>2 | Recalibrate |
| IMACC | P-FTIR | Acetylene | Min. once/day | C/E>2 | Recalibrate |
| IMACC | P-FTIR | CO (Carbon Monoxide) | Min. once/day | C/E>2 | Recalibrate |
| IMACC | P-FTIR | Ethane | Min. once/day | C/E>2 | Recalibrate |
| IMACC | P-FTIR | Hydrocarbon Continuum | Min. once/day | C/E>2 | Recalibrate |
| IMACC | P-FTIR | $CO_2$ (Carbon Dioxide) | Min. once/day | C/E>2 | Recalibrate |
| IMACC | P-FTIR | Isobutane | Min. once/day | C/E>2 | Recalibrate |
| IMACC | P-FTIR | Methane | Min. once/day | C/E>2 | Recalibrate |
| IMACC | P-FTIR | Plume Temperature | Min. once/day | C/E>2 | Recalibrate |

# APPENDIX H
# Measurement Data Quality Control Activities

| Company | Parameter/Instrument | Species Measured/Units | Calibration Frequency | Acceptance Criteria | Corrective Action |
|---|---|---|---|---|---|
| IMACC | P-FTIR | Butane | Min. once/day | C/E>2 | Recalibrate |
| IMACC | P-FTIR | $H_2O$ (Water) | Min. once/day | C/E>2 | Recalibrate |
| IMACC | P-FTIR | Propane | Min. once/day | C/E>2 | Recalibrate |
| IMACC | P-FTIR | Propylene | Min. once/day | C/E>2 | Recalibrate |
| Telops | I-FTIR | Butane | Min. once/day | Verify normal radiometric sensitivity and spectral integrity | Repair and/or replace device |
| Telops | I-FTIR | Ethylene | Min. once/day | Verify normal radiometric sensitivity and spectral integrity | Repair and/or replace device |
| Telops | I-FTIR | Propylene | Min. once/day | Verify normal radiometric sensitivity and spectral integrity | Repair and/or replace device |
| Telops | I-FTIR | Formaldehyde | Min. once/day | Verify normal radiometric sensitivity and spectral integrity | Repair and/or replace device |
| Telops | I-FTIR | Formic Acid | Min. once/day | Verify normal radiometric sensitivity and spectral integrity | Repair and/or replace device |
| Telops | I-FTIR | $CO_2$ (Carbon Dioxide) | Min. once/day | Verify normal radiometric sensitivity and spectral integrity | Repair and/or replace device |
| Telops | I-FTIR | $H_20$ | Min. once/day | Verify normal radiometric sensitivity and spectral integrity | Repair and/or replace device |
| Telops | I-FTIR | $O_3$ (Ozone) | Min. once/day | Verify normal radiometric sensitivity and spectral integrity | Repair and/or replace device |
| Telops | I-FTIR | $SO_2$ (Sulfur Dioxide) | Min. once/day | Verify normal radiometric sensitivity and spectral integrity | Repair and/or replace device |

# APPENDIX I

# Field Inspection Report

The spreadsheet in this appendix represents the Comprehensive Flare Study Project document that will be used daily by the UT Austin flare tests coordinator to verify that all project participants are fully operational at the beginning of each test day or document why the participant is not operational at the ZINK facility.

# APPENDIX I
# Field Inspection Report

| Company | Instrument | Species/Parameter Measurements | Condition | Operational | Observer Initials | Date/Time |
|---|---|---|---|---|---|---|
| Zink | Meteorology | wind speed, wind direction, ambient temperature, relative humidity, barametric pressure | | | | |
| | Flow Measurement | flare gas flow rate, steam assist flow rate, air assist flow rate | | | | |
| | Clock | time | | | | |
| | Thermocouple | flare gas temperature, flue gas exhaust temperature | | | | |
| | Calculation | exhaust gas velocity, pilot gas flow rate | | | | |
| TRC | Gas Chromatograph (GC) | concentrations of methane, ethane, propane in flare gas and plume | | | | |
| | Calculation | mass emission rates | | | | |
| Aerodyne | Quantum cascade,tunable infrared laser | CO, $NO_2$ | | | | |
| | | HCHO, HCOOH, $CH_3CHO$ | | | | |
| | | $C_2H_4$ (ethene), $C_3H_6$ (propene) | | | | |
| | ThermoElectron 42i | NO | | | | |
| | LI-COR | $CO_2$ | | | | |
| | Thermoelectron | $SO_2$ | | | | |
| | 2B Tech 205 | $O_3$ | | | | |
| | Proton Transfer Reaction Mass Spectrometer (PTR-MS) | Oxygenated, aromatic and selected olefinic VOCs | | | | |
| | Aerosol Mass Spectrometer AMS | size-resolved chemical composition and mass loadings of PM1 | | | | |
| | Gas Chromatograph (GC) | $CH_4$ (methane), $C_3H_6$ (propene) | | | | |
| | Multiangle Absorption Photometer (MAAP) | carbon black | | | | |
| | Scanning Mobility Particle Sizer (SMPS) | PM size distribution | | | | |
| | Condensate Particle Counter (CPC) | Particle number ($D_p$>7 nm) | | | | |
| | Dustrak | Particle mass (80 nm < Dp < 2.5 µm) | | | | |
| | Calculated from Measurements | CE and DRE | | | | |
| | Garmin | GPS location | | | | |
| | Met One | wind speed, wind direction, ambient temperature, relative humidity | | | | |
| Telops | HYPER CAM | Butane | | | | |
| | | Ethylene | | | | |
| | | Propylene | | | | |
| | | Formic Acid | | | | |
| | | $CO_2$ (Carbon Dioxide) | | | | |
| | | $H_2O$ (Water) | | | | |
| | | $O_3$ (Ozone) | | | | |
| | | $SO_2$ (Sulfur Dioxide) | | | | |
| IMACC | PFTIR | real time combustion efficiency | | | | |
| | PFTIR | $CO_2$ (Carbon Dioxide) | | | | |
| | PFTIR | Acetylene | | | | |

# APPENDIX I
# Field Inspection Report

| Company | Instrument | Species/Parameter Measurements | Condition | Operational | Observer Initials | Date/Time |
|---|---|---|---|---|---|---|
| | PFTIR | CO (Carbon Monoxide) | | | | |
| | PFTIR | Plume Temperature | | | | |
| | PFTIR | Hydrocarbon Continuum | | | | |
| | PFTIR | Isobutane | | | | |
| | PFTIR | Methane | | | | |
| | PFTIR | Ethane | | | | |
| | PFTIR | Propane | | | | |
| | PFTIR | Butane | | | | |
| | PFTIR | $H_2O$ (Water) | | | | |
| | PFTIR | Propylene | | | | |
| | AFTIR | real time combustion efficiency | | | | |
| | AFTIR | $CO_2$ (Carbon Dioxide) | | | | |
| | AFTIR | Acetylene | | | | |
| | AFTIR | CO (Carbon Monoxide) | | | | |
| | AFTIR | Plume Temperature | | | | |
| | AFTIR | Hydrocarbon Continuum | | | | |
| | AFTIR | Isobutane | | | | |
| | AFTIR | Methane | | | | |
| | AFTIR | Ethane | | | | |
| | AFTIR | Propane | | | | |
| | AFTIR | Butane | | | | |
| | AFTIR | $H_2O$ (Water) | | | | |
| | AFTIR | Propylene | | | | |
| Leak Surveys Inc. | Forward Looking Infrared Spectrometer (FLIR) | video, still pictures, written data | | | | |

# APPENDIX J

# Flare Flue Gas Sampling Device Diagram

The diagram in this appendix presents a general arrangement drawing, prepared by the John Zink Company LLC showing the plain and elevation views of the device that will extract a flare flue gas sample for analysis by Aerodyne Research, Inc., and TRC companies.

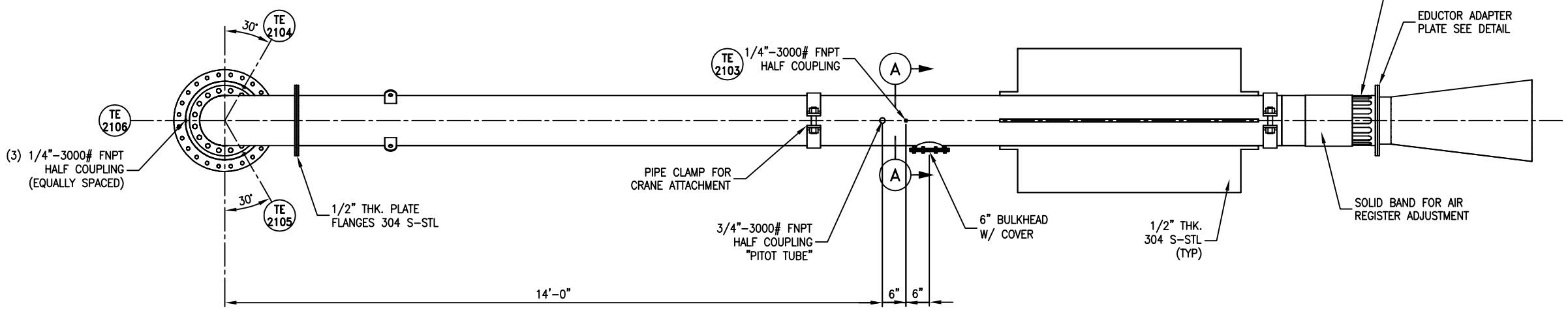


PLAN VIEW

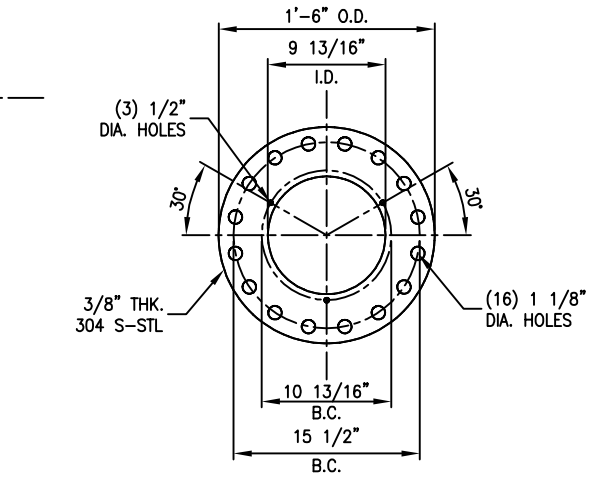


EDUCTOR ADAPTER PLATE DETAILS

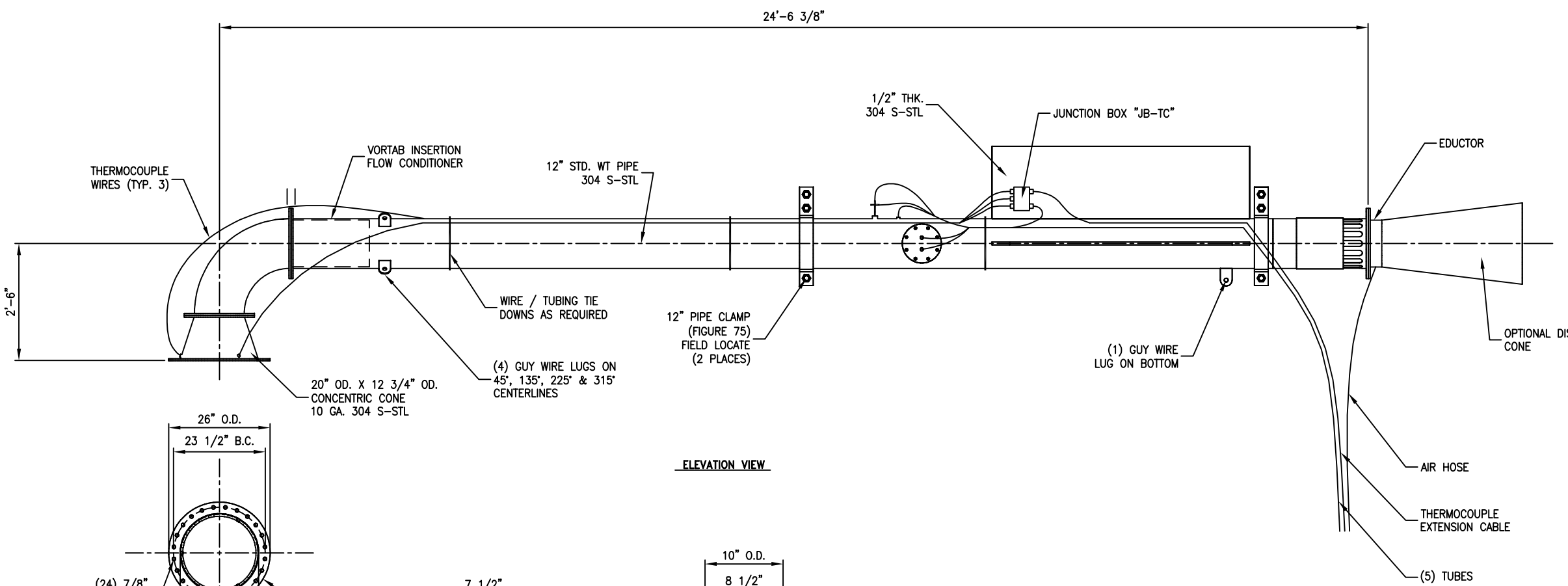


ELEVATION VIEW

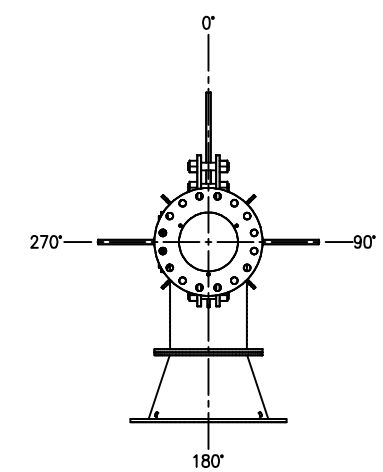


END VIEW

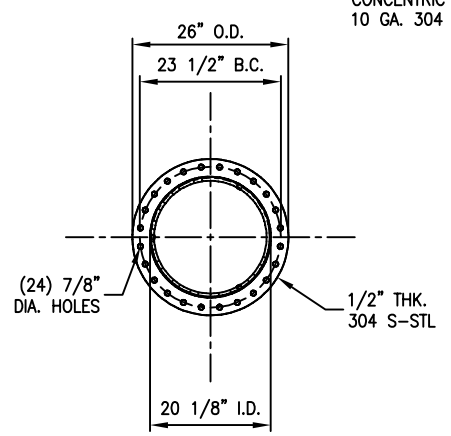


FLANGE DETAIL

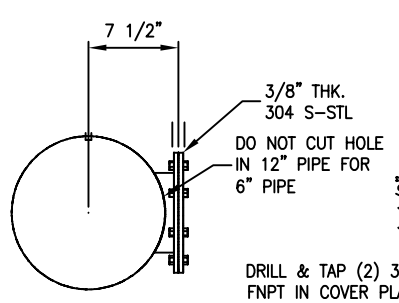


SECTION "A-A"

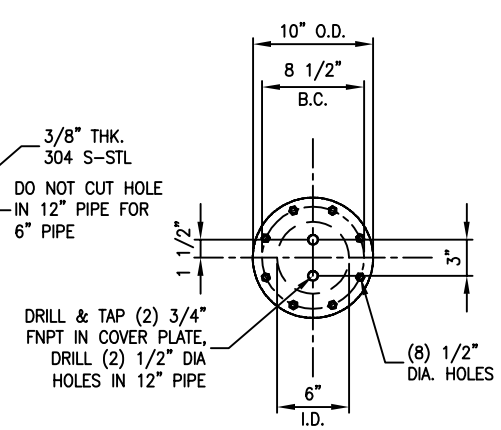


END VIEW

6" BULKHEAD DETAILS

This drawing and the information contained herein is of a confidential nature and the property of John Zink Company, LLC and shall not be copied, traced, photographed, or reproduced in any manner nor used for any purpose whatsoever, except by written permission of John Zink Company, LLC. This drawing shall be returned to John Zink Company, LLC upon request. Copyright 2010, John Zink Company, LLC. All rights reserved.

| NO. | REVISION DESCRIPTION | BY | CK. | APP. | DATE |
|---|---|---|---|---|---|
| 0 | | | | | |

FOR: CENTER FOR ENERGY & ENV RES
USER:
JOBSITE:
S.O. NO: 9105175
P.O. NO:
DR: C. DWYER DATE: JUNE 11,10
CK: DATE:
APP: DATE:

JOHN ZINK
JOHN ZINK COMPANY LLC
PARTS AND SERVICE, PHONE 1-800-755-4252, FAX (918) 234-5705

GENERAL ARRANGEMENT
SPECIALIZED SAMPLE HOOD

CERTIFIED
DATE:

DRAWING NUMBER B-F-9105175-201
REV. 0
SCALE NONE
1 OF 4

# APPENDIX J1

# Flare Flue Gas Sampling Device Drawings

The drawings in the appendix present the 3-dementional view of the vertical orientation of flare flue gas sampling device. This device will be positioned by the crane at the John Zink Company LLC to extract the sample for the Aerodyne Research, Inc., and TRC companies to make it situ measurements of the flare flue gas.

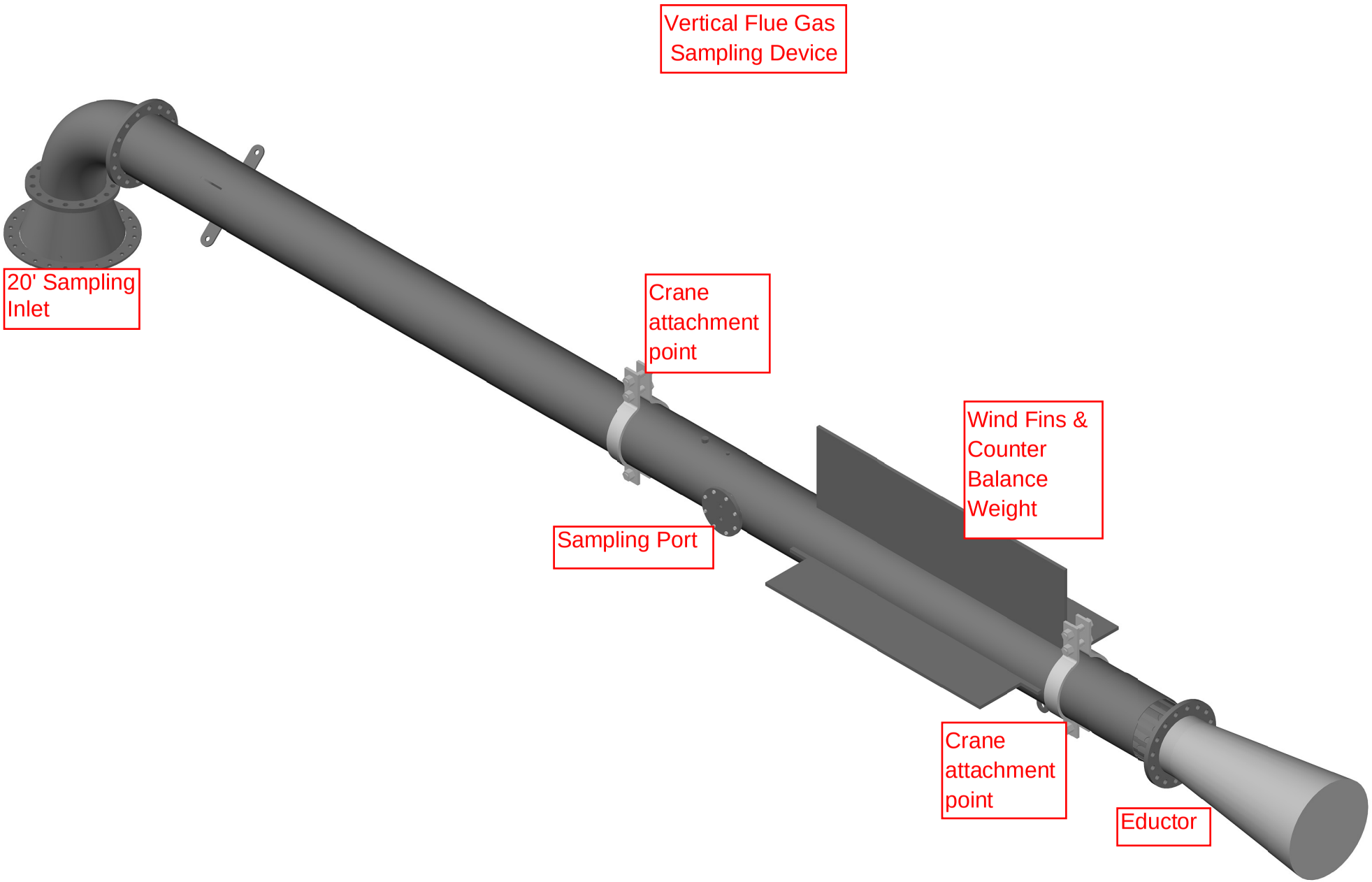
Vertical Flue Gas Sampling Device
20' Sampling Inlet
Crane attachment point
Wind Fins & Counter Balance Weight
Sampling Port
Crane attachment point
Eductor

# APPENDIX J2

# Flare Flue Gas Sampling Device Drawings

The drawings in the appendix present the 3-dementional view of the horizontal orientation of flare flue gas sampling device. This device will be positioned by the crane at the John Zink Company LLC to extract the sample for the Aerodyne Research, Inc., and TRC companies to make it situ measurements of the flare flue gas.

Horizontal Flue Gas Sampling Device

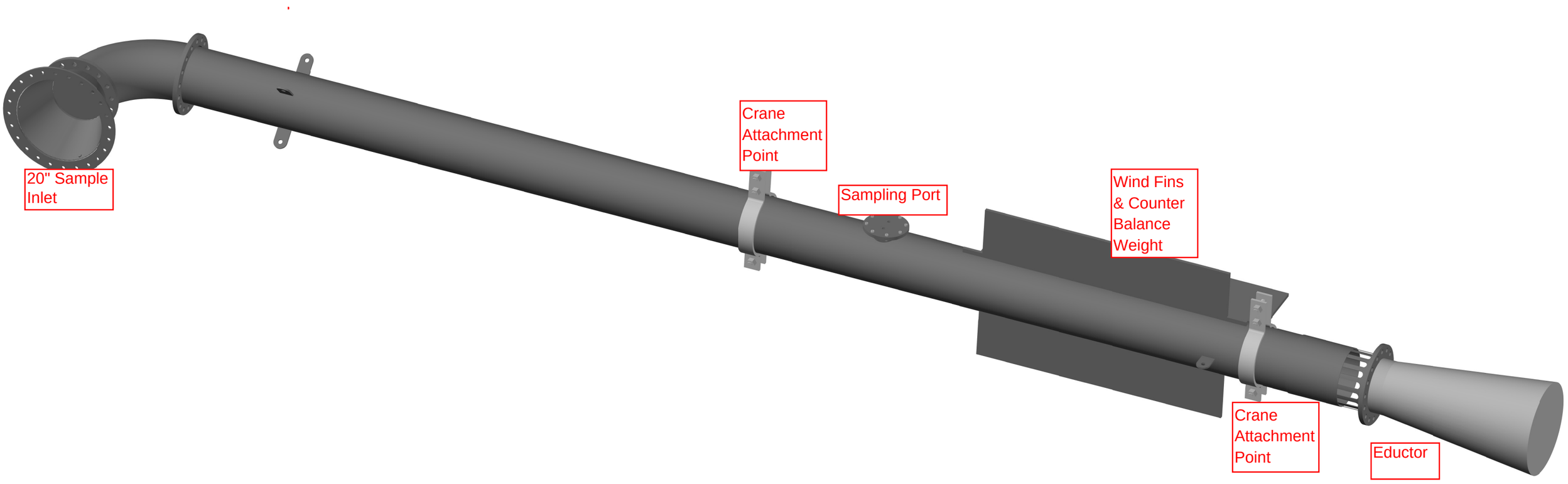

# APPENDIX K

# Comprehensive Flare Study Project Schedule of Major Activities for Field Measurements

The table in this appendix presents the schedule of major activities that will be conducted at the ZINK test facility between August and September 2010. This table is not intended as an all inclusive, detailed presentation of the procedures and processes that will be occurring during the Comprehensive Flare Study Project.

# Comprehensive Flare Study Project
# Schedule of Major Activities for Field Measurements

## August through September 2010

| Activity No. | Activity Date | Activity Name | Purpose/ Objective | Steam Flare | Air Flare | Conditions/ Protocol | Estimated Activity Duration |
|---|---|---|---|---|---|---|---|
| 1.0 | September 7-8 | Contract Compliance and Readiness Pretest Site Visit | Verify ZINK Facility Operational | Yes | Yes | Contract Compliance Document | 10 Hours |
| 2.0 | September 13 | Aerodyne Arrives & Sets Up 8 a.m. | Flare Emission Monitoring Equipment Installation | Yes | Yes | QAPP App. B: Aerodyne QC Procedures | 4 Hours |
| 3.0 | September 13 | All ZINK Systems QC Checks | Verification System Components meets Performance criteria | Yes | Yes | QAPP App. B: ZINK QC Procedures | 4 Hours |
| 4.0 | September 13, 14 & 15 | Data Acquisition and Reporting | QC Checks | Yes | Yes | UT Austin QC Display of Test Plan Condition | 1 Hour |
| | | | | | | Redundant Display of Control Room PC screen on big screen | 1 Hour |
| | | | | | | Aerodyne data live in the control room | 1 Hour |
| | | | | | | TRC data live in the control room | 1 Hour |
| | | | | | | IR &Visible camera data live in the control room | 1 Hour |
| | | | | | | Analysis of live and historical data in the control room | 1 Hour |

# Comprehensive Flare Study Project
# Schedule of Major Activities for Field Measurements

## August through September 2010

| Activity No. | Activity Date | Activity Name | Purpose/ Objective | Steam Flare | Air Flare | Conditions/ Protocol | Estimated Activity Duration |
|---|---|---|---|---|---|---|---|
| 5.0 | September 14, 2010 | Extractive Sample Capture System with Flare Running, LSI Arrives, Sets Up & Surveys | Operational and Functional Verification, LSI Survey | Yes | Yes | Crane Operation Protocol, Flare Test Protocol, Spike/Blank Protocol 4.0 | 8 Hours |
| 6.0 | September 14 & 15 | Post Test Comparison of Field vs Control Room Data | Operational and Functional Verification of Equipment | Yes | Yes | Daily Procedure | 4 Hours |
| 7.0 | September 15 | TRC/IMACC/Telops Arrive & Set Up 8 a.m. | Flare Emission Monitoring Equipment Installation | Yes | Yes | Method 3A Method 18 Method 19 | 4 Hours |
| 8.0 | September 15 | Test Plan Dry Run | **A.** Operational and Functional Verification **B.** Operational and Functional QC checks | Yes | Yes | Flare Test Matrix | 4 Hours |
| 9.0 | September 16 - 24 | Flare Testing | **Conduct Steam- and Air-Assisted Flare Tests** | Yes | Yes | Typical Daily Schedule for Flare Testing September 16 - 24 | 8 hours |

# APPENDIX L

# Steam Flare Tip Drawing

The drawing in this appendix presents the plain view and elevation drawing by the John Zink Company LLC of the steam flare tip for the Comprehensive Flare Study Project.

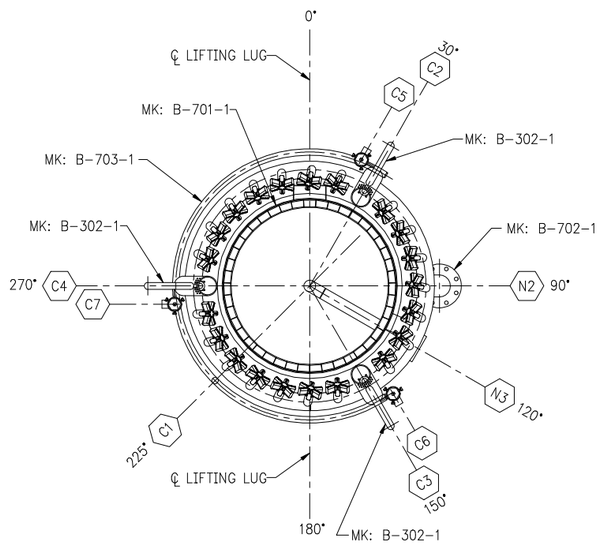


PLAN VIEW

(TRUE ORIENTATION)

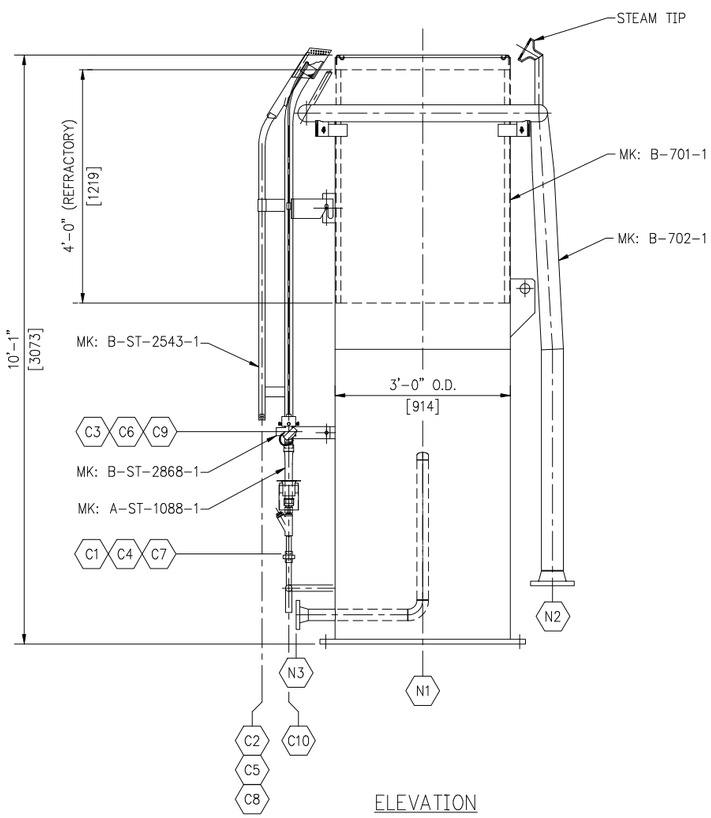


ELEVATION

(NOT TRUE ORIENTATION)

## PARTS LIST

| MARK NO. | QTY | DESCRIPTION | PART NO. |
|---|---|---|---|
| B-ST-2073-1 | 1 | EEF-QSC-36" FLARE TIP ASSEMBLY CONSISTING OF: | 1061928 |
| | 1 | B-ST-2074-1: EEF-QSC-36" FLARE TIP BODY | 1061914 |
| | 1 | B-ST-2075-1: UPPER STEAM MANIFOLD | 1061955 |
| | 1 | ST10578-1: PILOT GAS MANIFOLD | 1061971 |
| | | | |
| B-ST-2865 | 3 | EEP-503 PILOT ASSEMBLY CONSISTING OF: | 1098623 |
| | 3 | B-ST-2543-1: EEP-503 PILOT BODY | 1092920 |
| | 3 | A-ST-1088-1: PILOT MIXER ASSEMBLY | 0008127 |
| | 3 | B-ST-2868-1: THERMOCOUPLE & MOUNTING BRACKETS | 0034308 |
| | | | |

## NOZZLE LEGEND

| CONNECTION | QTY | DESCRIPTION |
|---|---|---|
| N1 | 1 | 36" TIP INLET CONNECTION: |
| N2 | 1 | UPPER STEAM MANIFOLD CONNECTION: 4" 150# RFWN |
| N3 | 1 | CENTER STEAM CONNECTION: 2" 150# RFWN |
| | | |
| C1, C4, C7 | 3 | 3/4" PILOT GAS CONNECTION |
| C2, C5, C8 | 3 | 1" PILOT IGNITION GAS CONNECTION |
| C3, C6, C9 | 3 | 3/4" THERMOCOUPLE CONNECTION |
| C10 | 1 | 1" PILOT GAS MANIFOLD INLET CONNECTION |
| | | |

## GENERAL NOTES

1. DIMENSIONS SHOWN IN [ ] ARE MILLIMETERS.
2. PILOT MIXER ORIFICE DRILLED FOR NATURAL GAS 75 SCFH [2.1 Nm3/HR] AT 15 PSIG [0.7 Kg/cm3]
3. PREFIX ALL TAG NO'S WITH S.O.
4. FLANGE BOLT HOLES TO STRADDLE RADIAL CENTERLINES.

| NO. | REVISION DESCRIPTION | BY | CK. | APP. | DATE |
|---|---|---|---|---|---|

This drawing and the information contained herein is of a confidential nature and the property of John Zink Company, LLC and shall not be copied, traced, photographed, or reproduced in any manner nor used for any purpose whatsoever, except by written permission of John Zink Company, LLC. This drawing shall be returned to John Zink Company, LLC upon request. Copyright 2010, John Zink Company, LLC. All rights reserved.

FOR: TCEQ

USER:

JOBSITE:

S.O. NO:

P.O. NO:

DR: BK DATE: 02-17-10

CK: WS DATE:

APP: DATE:

CERTIFIED

DATE:

JOHN ZINK®
JOHN ZINK COMPANY LLC
PARTS AND SERVICE, PHONE 1-800-755-4252, FAX (918) 234-5705

EEF-QSC-36" FLARE TIP ASSEMBLY
WITH (3) EEP-503 PILOTS

DRAWING NUMBER TCEQ QS-36

REV. 0

SCALE NONE

1 OF 1

# APPENDIX L1

# Air Flare Tip Drawing

The drawing in this appendix presents the plain view and elevation drawing by the John Zink Company LLC of the air flare tip for the Comprehensive Flare Study Project.

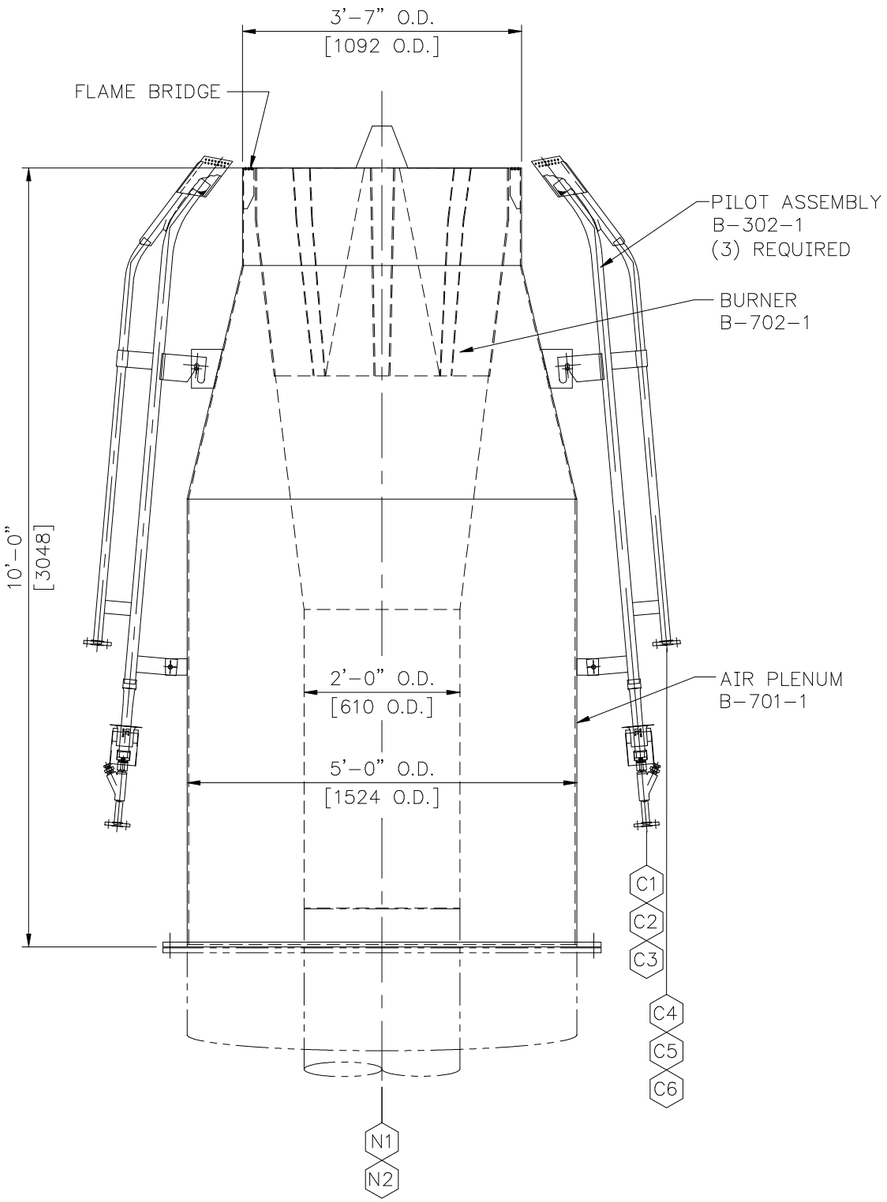


ELEVATION

(NOT TRUE ORIENTATION)

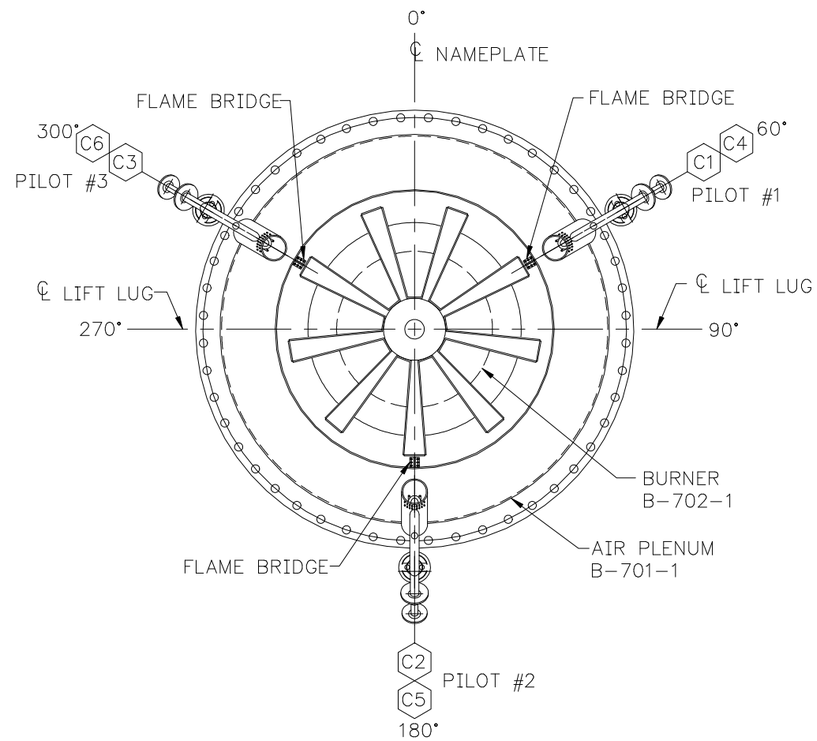


PLAN VIEW

(TRUE ORIENTATION)

## PARTS LIST

| MARK | QTY | DESCRIPTION |
|---|---|---|
| B-701-1 | 1 | AIR PLENUM |
| B-702-1 | 1 | BURNER SECTION W/(9) ARMS |
| | | |
| B-302-1 | 3 | EEP-503 PILOT ASSEMBLY |
| | | |
| | | |
| | | |

## NOZZLE LEGEND

| | | |
|---|---|---|
| N1 | 1 | 60" PLENUM INLET |
| N2 | 1 | 24" BURNER INLET |
| C1,C2,C3 | 1 EA. | 3/4" PILOT GAS CONNECTION |
| C4,C5,C6 | 1 EA. | 1" PILOT IGNITION GAS CONNECTION |
| | | |
| | | |

## GENERAL NOTES

1. DIMENSIONS SHOWN IN [ ] ARE MILLIMETERS.
2. PILOT MIXER ORIFICE DRILLED FOR NATURAL GAS 75 SCFH [2.1 Nm3/HR] AT 15 PSIG [0.7 Kg/cm3].
3. PREFIX ALL TAG NO'S WITH S.O.
4. FLANGE BOLT HOLES TO STRADDLE RADIAL CENTERLINES.

This drawing and the information contained herein is of a confidential nature and the property of John Zink Company, LLC and shall not be copied, traced, photographed, or reproduced in any manner nor used for any purpose whatsoever, except by written permission of John Zink Company, LLC. This drawing shall be returned to John Zink Company, LLC upon request. Copyright 2010, John Zink Company, LLC. All rights reserved.

| NO. | REVISION DESCRIPTION | BY | CK. | APP. | DATE |
|---|---|---|---|---|---|

FOR: TCEQ
USER:
JOBSITE:
S.O. NO:
P.O. NO:
DR: DATE:
CK: DATE:
APP: DATE:

JOHN ZINK®
JOHN ZINK COMPANY LLC
PARTS AND SERVICE, PHONE 1-800-755-4252, FAX (918) 234-5705

AIR FLARE TIP LHTS-24/60
W/(3) PILOTS

CERTIFIED
DATE:

DRAWING NUMBER
TCEQ LHTS-24

REV. 0

SCALE NONE

1 OF 1

# APPENDIX M

# ZINK facility Waste Gas and Steam Flow Diagram

The diagram in this appendix presents all the valves, pipes, tanks and flare tips that will be used by the John Zink Company LLC to conduct the Comprehensive Flare Study Project. This diagram is included for informational purposes only.

Due to the fact that all of the components necessary to conduct this project had to be built or that existing equipment had to be modified, a computer aided drawing will be developed to be included in the final project report.

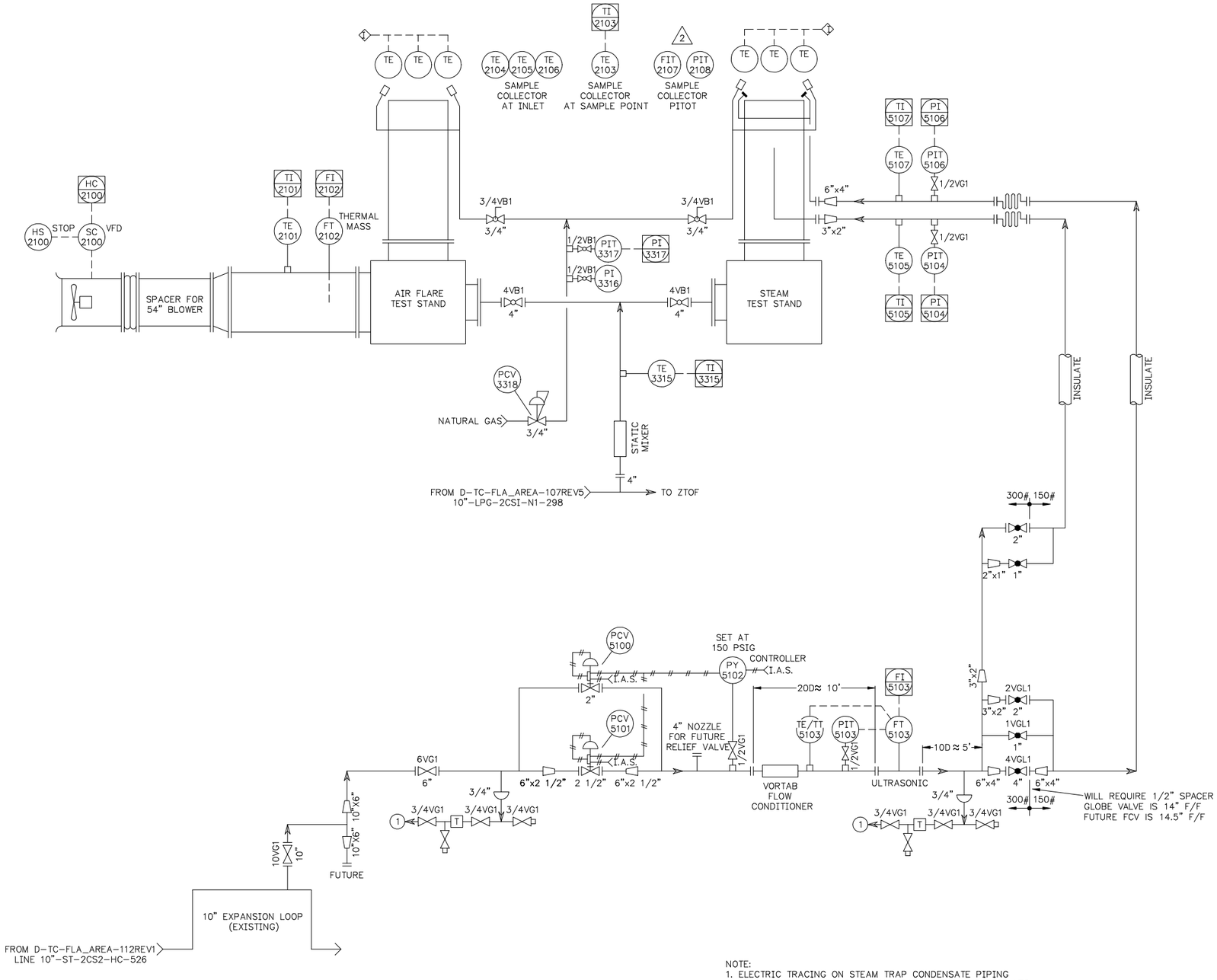


NOTE:
1. ELECTRIC TRACING ON STEAM TRAP CONDENSATE PIPING SHALL EXTEND THROUGH STEAM TRAP PIPING AND DRIP LEG TO CONNECTION POINT ON MAIN STEAM HEADER.

This drawing and the information contained herein is of a confidential nature and the property of John Zink Company and shall not be copied, traced, photographed, or reproduced in any manner nor used for any purpose whatsoever, except by written permission of John Zink Company. This drawing shall be returned to John Zink Company upon request. Copyright 2010, John Zink Company, LLC. All rights reserved.

| NO. | REVISION DESCRIPTION | BY | CK. | APP. | DATE |
|---|---|---|---|---|---|
| 2 | REVISED PER ENGINEERING | BN | | ZK | 8-9-10 |
| 1 | REVISED PER ENGINEERING | BN | | ZK | 6-8-10 |

FOR: JOHN ZINK COMPANY LLC
USER: JOHN ZINK COMPANY LLC
JOBSITE: TULSA, OK
R & D TEST FACILITY
S.O. NO. 9105010
P.O. NO.
DR. Beth DATE: 3-25-10
CK. DATE:
APP. ZK DATE:
CERTIFIED DATE:

JOHN ZINK®
JOHN ZINK COMPANY LLC
PARTS AND SERVICE, CALL 1-800-755-4252 FAX (918) 234-5705

FLARE TEST FACILITY UPGRADE
FUEL METERING AND CONTROL STATIONS
PIPING AND INSTRUMENT DIAGRAM

DRAWING NUMBER D-TC-FLA_AREA-120 REV 2
SCALE NONE

| BASE NUMBER | APPROVAL |
|---|---|
| | |

# APPENDIX M1

# ZINK facility Waste Gas and Steam Flow Diagram

The diagram in this appendix presents all the valves, pipes, tanks and flare tips that will be used by the John Zink Company LLC to conduct the Comprehensive Flare Study Project. This diagram is included for informational purposes only.

Due to the fact that all of the components necessary to conduct this project had to be built or that existing equipment had to be modified, a computer aided drawing will be developed to be included in the final project report.

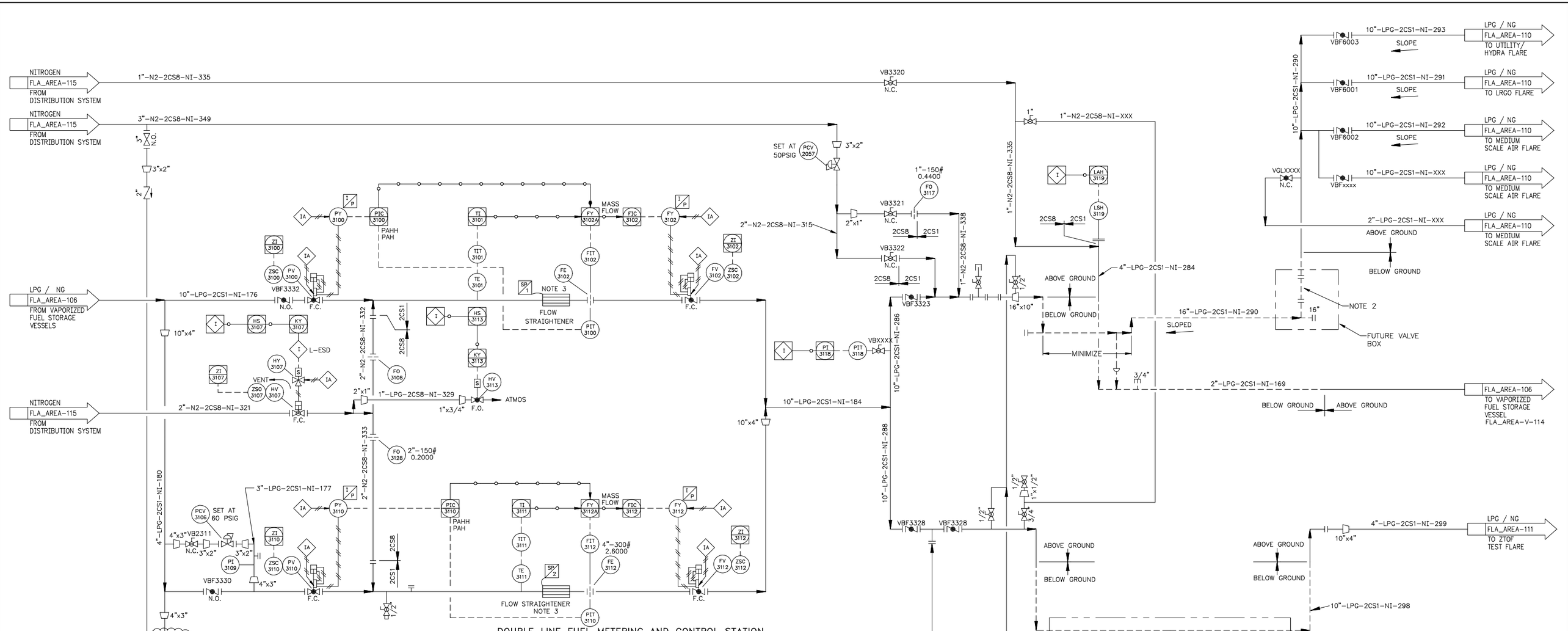


## NOTES:

1. FIELD VERIFY TIE-IN LOCATION, ELEVATION AND TIE-IN REQUIREMENTS.
2. SPOOL PIECE FOR FUTURE 10" BUTTERFLY VALVE.
3. FOR FLOW ORIFICE AND FLOW STRAIGHTENER LOCATIONS AND CRITICAL DIMENSIONS, SEE DWG NO D-TC-FLA_AREA-627, SHEET 2

This drawing and the information contained herein is of a confidential nature and the property of John Zink Company and shall not be copied, traced, photographed, or reproduced in any manner nor used for any purpose whatsoever, except by written permission of John Zink Company. This drawing shall be returned to John Zink Company upon request. Copyright 2000, John Zink Company, LLC. All rights reserved.

FOR: JOHN ZINK COMPANY LLC
USER: JOHN ZINK COMPANY LLC

| NO. | REVISION DESCRIPTION | BY | CK. | APP. | DATE |
|---|---|---|---|---|---|
| 6 | REVISED | BN | ZK | ZK | 6-8-10 |
| 5 | REVISED PIPING | BN | ZK | ZK | 3/25/10 |
| 4 | REVISED PER TEST CENTER MODIFICATION | DHC | | | 2/11/09 |
| 3 | GENERAL REVISIONS (JOHN ZINK) | KH | | | 8/23/02 |
| 2 | ADDED FLOW STRAIGHTENERS & RELOCATED PRESSURE TRANSMITTERS | JHK | HS | HS | 5/13/02 |
| 1 | ISSUED FOR DESIGN "SAVED UNDER PROJECT 01-153" | CTT | HS | HS | 11/30/01 |
| 0 | PHASE I - ISSUED FOR DESIGN | CTT | KAG | HS | 5/25/01 |

JOB NO: 01-832
ACAD FILE: D-TC-FLA_AREA-107
PLOT DATE: 5/13/2002 07:17:40

UNIFIELD ENGINEERING™

JOHN ZINK®
JOHN ZINK COMPANY LLC
R&D TEST FACILITY, CALL 1-918-234-5800 FAX (918) 234-5895

JOBSITE: TULSA, OK
R&D TEST FACILITY
S.O. NO. -
P.O. NO. -
DR. JHZ DATE: 10/15/99
CK. KAG DATE: 12/14/00
APP. HS DATE: 12/14/00

FLARE TEST FACILITY UPGRADE
FUEL METERING AND CONTROL STATIONS
PIPING AND INSTRUMENTATION DIAGRAM

CERTIFIED
DATE:

DRAWING NUMBER D-TC-FLA_AREA-107
REV. 6
SCALE NONE
SHEET 1 of 1

| BASE NUMBER | APPROVAL |
|---|---|
| | |

# APPENDIX N

# Flare Project Activity and Protocol Documents

The activity and protocol descriptions contained in this appendix describe activities that the UT Austin flare project personnel will use to coordinate the Comprehensive Flare Study Project. The descriptions have been developed to allow for additions and/or deletions of tasks or actions for optimum project use of the John Zink Company LLC flare operations facility.

# Contract Compliance Review

Activity Number 1.0
August 9-10, 2010

| Task No. | Task Start Time (Approx.) | Task Description | Purpose/ Objective | Task Responsible Party | Reference Document |
|---|---|---|---|---|---|
| 1.1 | 3:00 | Zink Safety Training for VT&EM (.5 hr) | Safety Instruction for Visitors | UT/Zink | Summary of EH&S Guidelines for Contractors |
| 1.2 | 3:30 | Tour Zink Facility, Flare Pad (.25 hr), Flare plumbing ( .5 hr), RD1 (1 hr), Observers Area (.5 hr), Control room (.5 hr), Access gates (.75 hr) Total 3.5 hr | Verify Compliance with Contract Requirements | UT/Zink | Daily QC Checklist, Protocol 3.0 |
| 1.3 | 8:00 | Visually inspect flare exhaust collector system, eductor working/attached/readings(.5 hr), pitot tube attached/moveable/ΔP instrument/ΔP transfer line(.5 hr), temperature probe attached/ working/ reading correctly(.5 hr), | Verify Compliance with Contract Requirements | UT/Zink | Appendix J |
| 1.4 | 9:00 | Verify air flow of flare exhaust collector system(2.5 hr) | Verify Compliance with Contract Requirements | UT/Zink | Airflow Measurement Procedure 7_21_10.doc |
| 1.5 | 1:00 | Verify homogeneity of flare exhaust collector system(2.5 hr) | Verify Compliance with Contract Requirements | UT/Zink | Homogeneity Measurement Procedure 7_21_10.doc |

# Aerodyne Arrives & Sets Up

Activity Number 2.0
September 13, 2010

| Task No. | Task Start Time (Approx.) | Task Description | Purpose/Objective | Task Responsible Party | Reference Document |
|---|---|---|---|---|---|
| 2.1 | 7:30 | Zink Safety Training (.5 hr) | Safety Instruction for Visitors | Zink/Aerodyne | Summary of EH&S Guidelines for Contractors |
| 2.2 | 8:00 | Flare Emission Monitoring Equipment Installation (8 hr) | Set up Equipment | Zink/Aerodyne | Aerodyne QC Procedures |

# All ZINK Flare Systems QC Checks

Activity Number 3.0
September 13, 2010

| Task No. | Task Start Time (Approx.) | Task Description | Purpose & Objective | Task Responsible Party | Reference Document |
|---|---|---|---|---|---|
| 3.1 | 8:00 | Flare Systems QC Check | Verification of pipe/valve/tank/transducer/gauge operation within performance criteria (4 hr) | UT/ZINK | QAPP Appendix B: ZINK QC Procedures |
| 3.2 | 1:00 | Flare Exhaust Collector System Checks | Verification of eductor/ pitot tube/ΔP gauge/static pressure/temperature gauge operation within performance criteria (2.5 hr) | UT/ZINK/ Aerodyne | Crane Operation Protocol 2, Flare Tests Protocol 4 |
| 3.3 | 1:00 | Set Up Control Room/Training Room | Install visual display/ video & voice communication cables (2.5 hr) | UT/ZINK/ Aerodyne | |
| 3.4 | 3:30 | ZINK Facility Walk Through | Verify safety devices/ doors/ gates/ lights/ etc. are all functioning (1.5 hr) | UT/ZINK | Daily QC Check list |

# Data Acquisition and Reporting

Activity No. 4.0
September 13, 14, 15, 2010

| Task No. | Task Start Time/Date(Approx.) | Task Description | Purpose & Objective | Task Responsible Party | Reference Document |
|---|---|---|---|---|---|
| 4.1 | 8:00 | Remote Display of Test Condition in control room, RD 1, Observers area | Verify visual display Operational | UT/Zink | |
| 4.2 | 9:00 | Redundant Display of Control Room PC in RD 1 | Verify visual display Operational | Zink | |
| 4.3 | 10:00 | Aerodyne data live in Control Room | Verify visual display Operational | Aerodyne/Zink | |
| 4.4 | 10:00 | IR & Visible camera data live in the control room | Verify visual display Operational | LSI/Zink | |
| 4.5 | 11:00 | TRC data live in the Control Room | Verify visual display Operational | TRC/Zink | |
| 4.6 | 2:00 | Analysis of live and historical data live in Control Room | Verify visual display Operational | Aerodyne/Zink | |

# Extractive Sample Capture System
# With the Flare Running, LSI Arrives, Sets Up & Surveys

Activity Number 5.0
September 14, 2010

| Task No. | Task Start Time (Approx.) | Task Description | Purposes & Objective | Task Responsible Party | Reference Document |
|---|---|---|---|---|---|
| 5.1 | 8:00 | Verify Crane Operational | Operation within performance criteria | UT/ZINK/Crane Operator | Crane Operation Protocol 2.0 |
| 5.2 | 10:30 | LSI Arrives & Sets Up, IR & Video Survey pipes, valves, fittings, tanks, gauges, etc. for leaks | Operation within performance criteria | ZINK/LSI/UT | Summary of EH&S Guidelines for Contractors |
| 5.3 | 11:00 | Verify Aerodyne has Sample Flow | Operation within performance criteria | UT/ZINK/Aerodyne | Aerodyne QC Procedures |
| 5.4 | 11:30 | Verify Aerodyne GPS Operational | Operation within performance criteria | UT/ZINK/Aerodyne | Aerodyne QC Procedures |
| 5.5 | 1:00 | Verify Project Communications Operational | Operation within performance criteria | UT/ZINK/Aerodyne | Zink QC Procedures |
| 5.6 | 2:00 | Verify Beacon/Horn System Operational | Operation within performance criteria | UT/ZINK/Aerodyne | John Zink Beacon/Horn Protocol |
| 5.7 | 2:45 | Verify Met Gear Operational | Operation within performance criteria | UT/ZINK/Aerodyne | Zink QC Procedures |
| 5.8 | 3:00 | Operate Crane with Beacon/Horn System | Operation within performance criteria | UT/ZINK/Aerodyne/Crane Operator | Crane Operation Protocol, John Zink Beacon/Horn Protocol 1.0 |
| 5.9 | 3:00 | Spike/Blank Tests | Operation within performance criteria | UT/ZINK/Aerodyne/Crane Operator/LSI | Spike/Blank Protocol 4.0 |
| 5.9 | 3:30 | Wrap Up-Review | Operation within performance criteria | UT/ZINK/Aerodyne/Crane Operator/LSI | |

# Extractive Sample Capture System
# With the Flare Running, LSI Arrives, Sets Up & Surveys

Activity No. 5.0 (Continued)
September 14, 2010

| Task No. | Task Start Time (Approx.) | Task Description | Purposes & Objective | Task Responsible Party | Reference Document |
|---|---|---|---|---|---|
| 5.10 | 3:45 | Repeat Today's Activities | Operation within performance criteria | UT/ZINK/Aerodyne/Crane Operator/LSI | |
| 5.11 | 5:00 | Wrap Up-Review Repeated Activities | Operation within performance criteria | UT/ZIK/Aerodyne/Crane Operator/LSI | |

# Post Test Comparison of
# Field vs Control Room Data

Activity 6.0
September 14-15, 2010

| Task No. | Task Start Time (Approx.) | Task Description | Purpose & Objective | Task Responsibility | Reference Document |
|---|---|---|---|---|---|
| 6.1 | 1:00 | Verification Zink Field information match control room information | Operation within performance criteria | UT/Zink | Appendix G & H of QAPP |
| 6.2 | 2:00 | Verify Aerodyne Field information match control room display information | Operation within performance criteria | UT/Aerodyne | Appendix G & H of QAPP |
| 6.3 | 4:00 | Verify LSI Field information match control room display information | Operation within performance criteria | UT/LSI | Appendix G & H of QAPP |
| 6.4 | 3:00 (9/15 only) | Verify TRC Field information match control room display information | Operation within performance criteria | UT/TRC | Appendix G & H of QAPP |

# TRC/IMACC/Telops Arrive & Set Up

Activity Number 7.0
September 15, 2010

| Task No. | Task Start Time (Approx.) | Task Description | Purpose/ Objective | Task Responsible Party | Reference Document |
|---|---|---|---|---|---|
| 7.1 | 7:30 | Safety Course (0.5 hr) | Safety Instruction For Visitors | Zink/TRC/IMACC/Telops | Summary of EH&S Guidelines for Contractors |
| 7.2 | 8:00 | Flare Emission Monitoring Equipment Installation (6 hr) | Set Up Equipment | Zink/TRC/IMACC/Telops | TRC/IMACC/ Telops QC Procedures |
| 7.3 | 3:00 | Set Up, Validation | Verify Systems Operational | Zink/TRC/IMACC/Telops | TRC/IMACC/ Telops QC Procedures |

# Test Plan Dry Run

Activity Number 8.0
September 15, 2010

| Task No. | Task Start Time (Approx.) | Task Description | Purpose/ Objective | Task Responsible Party | Reference Document |
|---|---|---|---|---|---|
| 8.1 | 8:00 | Test Plan Dry Run | Verify Present Participants Are Operational | UT/Zink/Aerodyne/LSI/ Crane Operator | Comprehensive flare study proposed test plan Series S1, S2, S3 |
| 8.2 | 11:00 | Wrap Up & Review | Discuss Successes and Failures for Next Run | UT/Zink/Aerodyne/LSI/ Crane Operator | |
| 8.3 | 3:00 | Re-do Activity 8.1, Task 8.1 | Verify Present Participants Are Operational | UT/Zink/Aerodyne/TRC/LSI/Crane Operator/ IMACC/Telops | Comprehensive flare study proposed test plan Series S1, S2, S3 |
| 8.4 | 5:00 | Wrap Up & Review | Discuss Successes and Failures for Next Run | UT/Zink/Aerodyne/TRC/LSI/Crane Operator/ IMACC/Telops | |

# Daily Schedule for Comprehensive Flare Project

Activity Number 9.0
September 16, 2010 through October 1, 2010

| Task No. | Task Start Time (Approx.) | Description | Purpose/ Objective | Task Responsible Party | Reference Document |
|---|---|---|---|---|---|
| 9.1 | 7:00 | Check in, Building RD 1 | Comply With Zink Requirements | Project Participants | |
| 9.2 | 7:30 | Daily Activity Briefing | Coordinate Today's Activities | UT | |
| 9.3 | 8:00 | Walk through Zink Facility | Verify Contract Compliance | ELM | Daily QC Check List |
| 9.4 | 9:00 | Start Flare Test, First Point | Testing | UT/Zink | Flare Test Matrix |
| 9.5 | 11:45 | Testing Stopped/Lunch in RD 1 | Lunch | Project Participants | |
| 9.6 | 12:45 | Start Flare | Testing | UT/Zink | Flare Test Matrix |
| 9.7 | 6:00 | Testing Stopped | End day's Activities | Project Participants | |
| 9.8 | 6:30 | Post Daily Activity Briefing | Review Today's Activities | UT | |
| 9.9 | 7:00 | All Participants Leave Zink Facility | Comply With Zink Requirements | UT | |

**Procedure for Verification and Calibration of the Air Flow Measurement of the Captured Flare Exhaust at the Pitot Tube Measurement Point**

**Purpose of this Procedure**
To calibrate the measurement of the flare exhaust flow at the pitot tube measurement point.

**References**
ASHRAE Handbook of Fundamentals, 1997

**Procedure**
The inlet (20" diameter) face of the flare exhaust collector should be oriented perpendicular to the ground. The centerline axis should be no closer than 40" from the ground and surrounding objects that might affect the flow of ambient air into the cone of the collector.

A standard pitot tube capable of traversing the entire diameter of the 12 inch diameter tube, i.e., wall-to-wall traverse, shall be inserted into pitot tube measurement port 1 and connected to a calibrated digital manometer or inclined manometer so as to read the difference between the static and total pressure, i.e., the dynamic pressure.

Step 1: The ambient temperature shall be measured and recorded.

Step 2: The eductor should then be started and set to its maximum draw capacity. This setting shall be recorded.

Step 3: The pitot tube shall be used to measure the velocity (pressure readings converted to velocity) at the following nine locations beginning at one wall of the 12 inch diameter tube and progressing to the opposite wall: 0.25", 1.40", 2.21", 4.14", 6.00", 7.86", 9.79", 10.60", and 11.75". These measurement locations are for the centerline of the of the pitot tube inlet. If at the near and far walls it is not possible to position the pitot tube at the specified location, it shall be placed one pitot tube inlet diameter from the wall and the exact locations recorded. These measurements (pressures and calculated velocity) shall be repeated two more times and recorded. The pitot tube shall then be inserted into pitot tube measurement port 2 (at a location 90 degrees around the circumference of the tube) and this process repeated at this location also.

Step 4: Calculate the airflow rate using the average velocity and the area of the tube (0.79 $ft^2$). Do not use the centerline (6") velocity when calculating the average velocity. (Note: Do not use average dynamic pressure to calculate the average velocity.) Record the average velocity (fpm) and the calculated air flow rate (cfm). Calculate and record the ratio of the average velocity to the centerline velocity.

Step 5: Repeat Steps 1 through 4 with the eductor set to deliver approximately 20% of the maximum airflow used in Steps 2 and 3 and calculated in Step 4.

Step 6: Repeat Steps 1 through 4 with the eductor set to deliver approximately 40% of the maximum airflow achieved and calculated in Step 4.

Step 7: Compare the ratio of the average velocity to the centerline velocity for the maximum airflow determined in Step 4 to the ratio of the average velocity to the centerline velocity for the 40% airflow measurements in Step 6. If the 40% airflow ratio agrees within 2% of the maximum airflow case, then no further measurements are required. If not, then proceed to Step 8.

Step 8: Repeat Steps 1 through 4 with the eductor set to deliver approximately 60% of the maximum airflow used in Steps 2 and 3 and calculated in Step 4.

Step 9: Compare the ratio of the average velocity to the centerline velocity for the maximum airflow determined in Step 4 to the ratio of the average velocity to the centerline velocity for the 60% airflow measurements in Step 8. If the 60% airflow ratio agrees within 2% of the maximum airflow case, then no further measurements are required. If not then proceed to Step 10.

Step 10: Repeat Steps 1 through 4 with the eductor set to deliver approximately 80% of the maximum airflow used in Steps 2 and 3 and calculated in Step 4.

**Procedure for Measurement of Homogeneity of Chemical Species**
**in**
**Apparatus for Capturing Flare Exhaust at Sampling Point**

## Purpose of this Procedure

To measure the degree of homogeneity of the chemical species in the stream of flare exhaust at the sampling point.

## Reference

CFR Chapter 40 Part 60, Appendix A, Method 1

## Procedure

The inlet (20" diameter) face of the flare exhaust collector should be oriented perpendicular to the ground. The centerline axis should be no closer than 40" from the ground and surrounding objects that might affect the flow of ambient air into the cone of the collector.

A pitot tube capable of traversing the entire diameter of the 12 inch diameter tube, i.e., wall-to-wall traverse, shall be inserted into pitot tube measurement port 1 and connected to the carbon dioxide ($CO_2$) analyzer.

Step 1: The ambient temperature and altitude of the test location shall recorded.

Step 2: The eductor should then be started and set to approximately 20% of its maximum draw capacity as determined through the velocity verification and calibration procedure. This setting shall be recorded.

Step 3: The pitot tube shall be used to extract an air sample at the following nine locations beginning at one wall of the 12 inch diameter tube and progressing to the opposite wall: 0.38", 1.26", 2.33", 3.88", 6.00", 8.12", 9.67", 10.74", and 11.62". These sampling locations are for the centerline of the of the pitot tube inlet. If at the near and far walls it is not possible to position the pitot tube at the specified location, it shall be placed 0.5" from the wall and the exact location recorded.

Step 4: Measure and record the $CO_2$ concentrations at the nine locations specified in Step 3. These measurements shall be repeated two more times and recorded. The pitot tube shall then be inserted into pitot tube measurement port 2 (at a location 90 degrees around the circumference of the tube) and this process repeated at this location also.

Step 5: Calculate the average of the 18 $CO_2$ concentrations. Identify the reading that deviates the most from the average concentrations. Calculate this maximum percent deviation and record the value.

Step 6: Steps 1 through 5 shall be repeated with the $CO_2$ source, capable of delivering a stream of $CO_2$ at a concentration of 100% $CO_2$ and a rate of 2 +/- 0.25 cfm, positioned first at the center

of the inlet as shown in Figure 1 and then Steps 1 through 4 repeated for the other four locations. Positions 2 through 5 are 90 degrees apart and located a radial distance 2.5” from the wall.

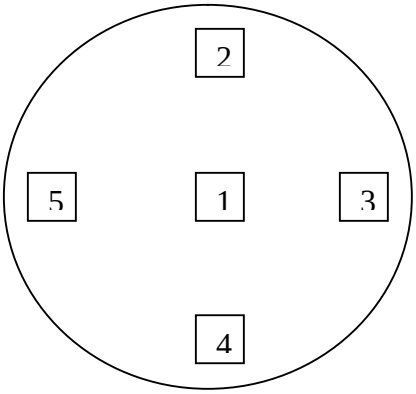


Figure 1. $CO_2$ Source Release Locations – View Looking at Entrance to Collector

Step 7: The ambient air temperature shall be measured and recorded.

Step 8: The eductor should then be started and set to 60% of its maximum draw capacity as determined through the velocity verification and calibration procedure. This setting shall be recorded.

Step 9: Steps 1 through 4 shall be repeated with the $CO_2$ source, capable of delivering a stream of $CO_2$ at a concentration of 100% $CO_2$ and a rate of 2 +/- 0.25 cfm, positioned first at the center of the inlet as shown in Figure 1 and then Steps 1 through 4 repeated for the other four locations. Positions 2 through 5 are 90 degrees apart and located a radial distance 2.5” from the wall..

Step 10: Calculate the average of the 18 $CO_2$ concentrations. Identify the reading that deviates the most from the average concentration. Calculate this maximum percent deviation and record the value. If the concentration varies by more than the % deviation calculated in Step 5 or 2% from the average, then proceed with Step 11. If not, this test is complete.

Step 11: The ambient air temperature shall be measured and recorded.

Step 12: The eductor should then be started and set to 100% of its maximum draw capacity as determined through the velocity verification and calibration procedure. This setting and the centerline velocity shall be recorded.

Step 13: Repeat Step 9.

Step 14: Calculate the average of the 18 $CO_2$ concentrations. Identify the reading that deviates the most from the average velocity. Calculate this maximum percent deviation and record the value.

# ZINK Flare Test Facility
# Beacon/Horn Protocol

Protocol Number 1.0
August, September, October, 2010

| | |
|---|---|
| SOLID Red Color | No fuel flowing to the flare or stop test command |
| SOLID Yellow Color | Start fuel command or fuel flowing to the flare, no data being logged |
| FLASHING Yellow Color | 5 Seconds prior to data log go signal |
| FLASHING Green Color | Data log, go signal during entire test |

Each change in beacon status is accompanied by a horn blast to alert everyone to the change.

# Crane Process for Sample Collection and Positioning

Protocol Number 2.0
September 14, 2010

| Task No. | Task Start Time (Approx.) | Task Description | Task Responsible Party | Reference Document |
|---|---|---|---|---|
| 2.0 | 8:00 | Grid Use Practice | Crane Operator | |
| 2.1 | 8:30 | Communication | UT/Crane Operator/Zink/ | |
| 2.2 | 10:00 | Safety Verification | UT/Crane Operator/Zink | |
| 2.3 | 10:00 | Field of View Documented | UT/Crane Operator/Zink | |
| 2.4 | 10:15 | Operational Area Roped Off | UT/Crane Operator/Zink | |
| 2.5 | 10:45 | Beacon/Horn System Check | UT/Crane Operator/Zink | Protocol 1.0 |

# Daily QC "Walk About" Check List

Protocol 3.0
September 13 through September 24, 2010

| Item No. | Item Description | Item Present | Item Absent | Other Condition | Observer Initials | Date/Time |
|---|---|---|---|---|---|---|
| 1.0 | Walkways Clear, Bld.RD1 | | | | | |
| 2.0 | Doors Not Locked | | | | | |
| 3.0 | Phones work control room | | | | | |
| 4.0 | Phones work observer area | | | | | |
| 5.0 | Bathrooms operational Bldg. RD1 | | | | | |
| 6.0 | Bathrooms operational observer area | | | | | |
| 7.0 | Lights work training room RD1 | | | | | |
| 8.0 | Lights work control room | | | | | |
| 9.0 | Lights work observers area | | | | | |
| 10.0 | Internet works training room RD1 | | | | | |
| 11.0 | Internet works control room | | | | | |
| 12.0 | Internet works observers area | | | | | |
| 13.0 | Displays work training room RD1 | | | | | |
| 14.0 | Displays work control room | | | | | |
| 15.0 | Displays work observers area | | | | | |
| 16.0 | Emergency evacuation plan posted training room RD1 | | | | | |
| 17.0 | Emergency evacuation plan posted control +room | | | | | |
| 18.0 | Emergency evacuation plan posted observers area | | | | | |
| 19.0 | Location of fire extinguisher and fire alarm pull stations training room RD1 | | | | | |
| 20.0 | Location of fire extinguisher and fire alarm pull stations control room | | | | | |
| 21.0 | Location of fire extinguisher and fire alarm pull stations observers area | | | | | |
| 22.0 | Emergency evacuation plan posted training room RD1 | | | | | |

# Daily QC "Walk About" Check List

Protocol 3.0 (Continued)
September 13 through October 1, 2010

| Item No. | Item Description | Item Present | Item Absent | Other Condition | Observer Initials | Date/Time |
|---|---|---|---|---|---|---|
| 23.0 | Vehicular traffic | | | | | |
| 24.0 | Emergency evacuation plan posted control room | | | | | |
| 25.0 | Emergency evacuation plan posted observers area | | | | | |
| 26.0 | Emergency lighting training room RD 1 | | | | | |
| 27.0 | Emergency lighting control room | | | | | |
| 28.0 | Emergency lighting observers area | | | | | |
| 29.0 | Manned gates/doors | | | | | |

# Steam/Air Flare Matrix
# Spike & Blank Tests

Protocol No. 4
September 14, 2010

| Task No. | Task Start Time (Approx.) | Flare Type/Waste Gas Flow | Task Description | Task Responsible Party | Reference Condition |
|---|---|---|---|---|---|
| 4.1 | 4:15 | Air<br><br>@ 359 lb/hr | 100% Nitrogen, No pilot | UT/Zink/Aerodyne/Crane Operator/LSI | Blank |
| 4.2 | 4:30 | Air<br>@ 359 lb/hr | 99% Nitrogen, 1% TNG, No pilot | UT/Zink/Aerodyne/Crane Operator/LSI | Spike |
| 4.3 | 4:45 | Air<br>@ 359 lb/hr | 100% Nitrogen, No pilot | UT/Zink/Aerodyne/Crane Operator/LSI | Blank |
| 4.4 | 3:00 | Steam<br>@ 937 lb/hr | 100% Center/Upper Steam, No pilot | UT/Zink/Aerodyne/Crane Operator/LSI | Blank |
| 4.5 | 3:15 | Steam<br>@ 937 lb/hr | 100% Nitrogen, No pilot | UT/Zink/Aerodyne/Crane Operator/LSI | Blank |
| 4.6 | 3:30 | Steam<br>@ 937 lb/hr | 99% Nitrogen, 1% TNG, No pilot | UT/Zink/Aerodyne/Crane Operator/LSI | Spike |
| 4.7 | 3:45 | Steam<br>@ 937 lb/hr | 100% Nitrogen, No pilot | UT/Zink/Aerodyne/Crane Operator/LSI | Blank |

# Incipient Smoke Point, Visible Emission Definition Decision Protocol

Protocol Number 5.0
September, October, 2010

1. During any test, the decision on when the flare is at the Incipient Smoke Point (ISP) will be made by a three person observation committee composed of one UT Austin representative (Vincent Torres), one John Zink Company LLC representative (Bob Schwartz) and a 3rd person designated by UT Austin and ZINK. UT Austin and ZINK will appoint alternates for this committee, as needed, to relieve these primary designees.

2. The definition of the incipient smoke point for this project is defined to be when there are no visible emissions observed two flame lengths away from the flare tip.

3. The definition for visible emissions for this project is defined to be the appearance of a group of black color particles observed in the portion of the flue gas where condensate water vapor is not present.

4. As part of the information collected during each test point, a qualified assessment as the stability of the flame shall be made by the three observers and recorded.

5. The observation committee shall be located approximately perpendicular to the flue gas when making observations of the flue gas to determine the ISP. Three 15 second observations shall be made of the flue gas. Observers shall not look at the flue gas in between observations. A data set consists of three consecutive 15-second observations. When all three observations in a data set satisfy the definition in Item 2, the committee will state that the ISP has been achieved.

6. The committee will communicate their decision on the condition of the flue gas to the UT Flare Tests Coordinator (Edward Michel) to initiate the time stamping of the measurements being made by the project participants.

* This process was created by using the EPA Method 9 operator training requirements.

# APPENDIX O

# Acronyms

# ACRONYMS

**A**

| | |
|---|---|
| ADQ | Audit Data Quality |
| AF | Air Flow |
| AMS | Aerosol Mass Spectrometer |
| ARI | Aerodyne Research, Inc. |
| ASME | American Society of Mechanical Engineers |
| AVE | Average |

**C**

| | |
|---|---|
| CD | Compact Disk |
| CE | Combustion Efficiency |
| CEER | Center for Energy and Environmental Resources |
| CFR | Code of Federal Regulations |
| $CH_3CHO$ | Acetaldehyde |
| $C_2H_4$ | Ethylene, Ethene |
| $C_3H_6$ | Propylene, propene |
| CO | Carbon Monoxide |
| $CO_2$ | Carbon Dioxide |
| CPC | Condensate Particle Counter |

**D**

| | |
|---|---|
| D | Mean |
| DAS | Data Acquisition System |
| DST | Daylight Savings Time |
| ° | Degree of Temperature |
| °F | Degree Fahrenheit |
| DIAL | Differential Absorption Lidar |
| Dp | Particle diameter |
| DPI | Differential Pressure Transmitter |
| DQO | Data Quality Objective |
| DRE | Destruction and Removal Efficiency |

**E**

| | |
|---|---|
| EPA | U.S. Environmental Protection Agency |

**F**

| | |
|---|---|
| FF | Fuel Flow |
| FLIR | Forward Looking Infrared |
| FPV | flare plume velocity |
| FT | Flue gas Temperature |
| FTIR | Fourier Transforms Infra Red |
| FID | Flame Ionization Detector |

**G**

| | |
|---|---|
| GC | Gas Chromatograph |
| GPS | Global Positioning System |

**H**

| | |
|---|---|
| HC | Hydrocarbon |

| | |
|---|---|
| HCHO | Formaldehyde |
| HCOOH | Formic Acid |

**I**

| | |
|---|---|
| IMACC | Industrial Monitor and Control Corporation |
| IR | Infrared |
| ISP | Incipient Smoke Point |

**J**

| | |
|---|---|
| JZ | John Zink Company, LLC |

**L**

| | |
|---|---|
| Lb/hr | Pound per Hour |
| LL | Lower Limits |
| LSI | Leak Specialties, Inc. |

**M**

| | |
|---|---|
| MAPP | Muli-Angle Absorption Photometer |
| M/S | Meters per second |
| $CH_4$ | Methane |
| $\mu g/m^3$ | Microgram per meter cubed |
| µm | Micrometer |
| MPH | Miles Per Hour |
| mm/Hg | Millimeters Mercury |
| Min | Minutes |

**N**

| | |
|---|---|
| NA | Not Applicable |
| NAMS | National Air Monitoring Station |
| $ng/m^3$ | Nanograms per Meter Cubed |
| nm | Nanometers |
| NIST | National Institute of Standards and Technology |
| NO | Nitric Oxide |
| $NO_2$ | Nitrogen dioxide |
| No. | Number |
| NPL | National Physical Laboratory |

**O**

| | |
|---|---|
| $O_3$ | Ozone |

**P**

| | |
|---|---|
| PAMS | Photochemical Air Monitoring System |
| PDF | Portable Document Format |
| % | Per cent |
| PFTIR | Passive Fourier Transforms Infrared Technology |
| PGA | Proposal for Grant Activities |
| PL | Probability Limits |
| ± | Plus or Minus |
| PM1 | Particulate Matter 1 micron or smaller in diameter |
| ppb | Parts per billion |

| | |
|---|---|
| ppm | Parts per million |
| ppmV | Parts per million by volume |
| ppt | Parts per trillion |
| PSIg | Pounds per square inch, gauge |
| PT | Pressure Transducer |
| PTR-MS | Proton Transfer Mass Spectrometer |

**Q**

| | |
|---|---|
| QA | Quality Assurance |
| QAPP | Quality Assurance Project Plan |
| QC | Quality Control |
| QC-TILDAS | Quantum Cascade Tunable Infrared Laser Differential Absorption Spectrometer |
| QMP | Quality Management Plan |

**R**

| | |
|---|---|
| REMPI | Resonance-Enhanced Multiphoton Ionization Mass Spectrometer |

**S**

| | |
|---|---|
| Sec | Second |
| SF | Steam Flow |
| SLAMS | State and Local Air Monitoring Station |
| SMPS | Scanning Mobility Particle Sizer |
| Scft/sec | Standard Cubic Foot per Second |
| SRM | Standard Reference Material |
| SOP | Standard Operating Procedure |
| $SO_2$ | Sulfur dioxide |

**T**

| | |
|---|---|
| TCEQ | Texas Commission on Environmental Quality |
| THC | Total Hydrocarbons |
| TRC | TRC company |
| TNG | Tulsa Natural Gas |

**U**

| | |
|---|---|
| UL | Upper Limits |
| UT | The University of Texas at Austin |

**V**

| | |
|---|---|
| VOC | Volatile Organic Compound |

**W**

| | |
|---|---|
| WD | Wind Direction |
| WS | Wind Speed |

**Z**

| | |
|---|---|
| ZINK | John Zink Company, LLC |