PBS&J

An employee-owned company

Document No. 030003
PBS&J Job No. 460105

DRAFT
GENERAL CONFORMITY DETERMINATION
BRAYS BAYOU FEDERAL FLOOD CONTROL PROJECT
HARRIS COUNTY, TEXAS

Prepared for:

Harris County Flood Control District
9900 Northwest Freeway
Houston, TX 77092

Prepared by:

PBS&J
206 Wild Basin Road
Suite 300
Austin, Texas 78746-3343

March 28, 2003

Printed on recycled paper

PROFESSIONAL ENGINEER STATEMENT

This Draft General Conformity Determination and attached estimate of air contaminant emissions is released on March 28, 2003, under the authority of Ruben I. Velasquez, P.E., Registration No. 69126, for the purpose of evaluation and discussion. This preliminary document is not to be used for construction, bidding, or permitting purposes.

TABLE OF CONTENTS

Section		Page
	List of Figures	iii
	Acronyms and Abbreviations	iv
1.0	INTRODUCTION	1-1
2.0	REGULATORY BACKGROUND – GENERAL CONFORMITY	2-1
3.0	APPLICABILITY	3-1
4.0	AIR EMISSIONS INVENTORY	4-1
5.0	PRELIMINARY GENERAL CONFORMITY DETERMINATION	5-1
6.0	REFERENCES	6-1

APPENDICES:

A Estimate of NO_x and VOC Emissions From Project Construction Equipment

B Letter From Texas Natural Resource Conservation Commission Discussing SIP Construction Emissions Summary

LIST OF TABLES

Table		Page
1	Summary of NO_x Construction Emissions	4-2
2	Summary of VOC Construction Emissions	4-3

ACRONYMS AND ABBREVIATIONS

CAA	Federal Clean Air Act
CFR	Code of Federal Regulations
CO	carbon monoxide
DOT	U.S. Department of Transportation
EIS	Environmental Impact Statement
EPA	U.S. Environmental Protection Agency
FHWA	Federal Highway Administration
HGA	Houston-Galveston Area
MPO	Metropolitan Planning Organization
NAAQS	National Ambient Air Quality Standards
NEPA	National Environmental Policy Act
NO_2, NO, NO_3, NO_x	nitrogen dioxide (NO_2), nitric oxide (NO), and nitrate radical (NO_3) are collectively called nitrogen oxides (NO_x)
$PM_{[n]}$	particulate matter with an aerodynamic diameter of [*n*]
SIP	Texas State Implementation Plan
SO_2	sulfur oxides
TERP	Texas Emissions Reduction Plan
TCEQ	Texas Commission on Environmental Quality (formerly named the Texas Natural Resource Conservation Commission)
tpy	tons per year
U.S.	United States
USACE	U.S. Army Corps of Engineers
VOC	Volatile Organic Compound

1.0 INTRODUCTION

A Draft Environmental Assessment (EA) has been prepared on behalf of the Harris County Flood Control District (HCFCD) for submittal to the U.S. Army Corps of Engineers (USACE), Galveston District, the lead agency for the Brays Bayou Federal Flood Control Project. A feasibility report and Environmental Impact Statement were previously prepared in May 1988; Congress authorized the project in 1990. Section 211(f) of the Water Resources Development Act of 1996 has given the HCFCD, as the local sponsor representing Harris County, the authority to conduct the General Reevaluation of the Diversion Element.

Brays Bayou is located in the southwestern part of the City of Houston, Harris County, Texas. The Brays Bayou watershed drains an area of approximately 128 square miles containing areas in both Harris and Fort Bend Counties. A Recommended Plan has been identified for reducing flooding along Brays Bayou based on optimization of the net economic benefit and refined based on environmental impacts. The Recommended Plan or proposed project would include a combination of channel modifications and bridge modifications/replacements along Brays Bayou and stormwater detention basins located adjacent to Willow Waterhole Bayou (a tributary of Brays Bayou), as follows:

- Downstream channel modifications (Houston Ship Channel to Calhoun Street)
- Middle reach channel modifications (Calhoun Street to Fondren)
- 1,865 acre-feet (237 acres) of stormwater detention on Willow Waterhole Bayou
- 12 bridge replacements to raise/widen bridges, including the removal of abandoned railroad piers
- 18 bridge modifications to widen existing roadway bridges and pedestrian crossings

The purpose of the project is to provide an alternative to the Diversion Element that would reduce flooding along the middle and lower reaches of Brays Bayou, while being consistent with the following objectives and constraints:

OBJECTIVES

- Reduction in residential and business flooding caused by large flows in Brays Bayou from its mouth to the Sam Houston Tollway
- Minimization of the total project cost
- Maximization of the economic benefits to the community
- Development of a project that satisfies federal criteria for financial participation
- Minimization of adverse impacts on existing fish and wildlife habitat
- Enhancement or improvement of the aesthetics, environmental quality, and existing recreational amenities where possible

CONSTRAINTS

- The project should have the general support of the affected citizens and businesses in the watershed
- The project must conform with the mission of the HCFCD and be implementable by the HCFCD under existing laws, ordinances, and policies
- The project must be developed following the applicable policies and guidelines of the USACE
- No adverse flood impacts may be created by the implementation of the project
- No diversion outside of the watershed will be considered

In addition, Federal guidelines for plan formulation and economic analysis required that the Recommended Plan generally seek to maximize the net economic benefit while being consistent with protecting the nation's environment.

The project is needed to reduce residential and business flooding caused by large flows in Brays Bayou from its mouth to the Sam Houston Tollway. The first Federal Flood Control Project for Brays Bayou was authorized by the Flood Control Act of 1954 and designated by the USACE in 1953 and 1954. Since the completion of channel modifications in 1971, numerous flood events have occurred along Brays Bayou that caused significant property damage to residences and businesses in the watershed including the following events:

- June 15, 1976 – Over 13 inches of rainfall in the Brays Bayou watershed caused approximately $35 million in flood damage to property. This storm event severely impacted the Texas Medical Center, which experienced power outages and damage to medical equipment and buildings. Hospitals in the Medical Center had to evacuate patients and at least one death was attributed to the inability to access the area for medical attention. Damage in the Medical Center was estimated at $20 million.
- September 19, 1983 – Flooding caused property damage of approximately $38 million to over 1,000 residential structures along a three-mile reach of Brays Bayou from Buffalo Speedway to Hillcroft.
- More recent flood events along Brays Bayou have occurred in March 1992, October 1994, and September 1998, which caused property damage and disrupted traffic for extended periods of time.
- June 2001 – Devastating flooding events occurred when Tropical Storm Allison produced over 30 inches of rainfall in Houston, Texas. Damages to the Houston Area, including the Medical Center, were estimated at $5 billion and President George W. Bush declared the region a disaster area. Residents were forced from their homes as entire neighborhoods were inundated by the rising floodwaters. Emergency services were interrupted. There were a total of 23 deaths in southeast Texas as a result of the storm.

The project is intended to alleviate flood conditions such as these and is described in more detail in the Environmental Assessment document (HCFCD, 2002).

The proposed Brays Bayou Federal Flood Control Project will be located within Harris County, a county included in the Houston-Galveston Area (HGA), which has been designated as "Severe-17" nonattainment for ozone. This area is in attainment with all other criteria pollutants. The General Conformity Rule applies to all nonattainment and maintenance areas. For a nonattainment area such as Harris County, a general conformity determination is required for each pollutant where the total of direct or indirect emissions caused by the project would equal or exceed a specific threshold for nitrogen oxides (NO_x) or volatile organic compounds (VOC). Based on an evaluation of air contaminant emissions from the construction activities associated with this project, it has been determined that a General Conformity Determination for NO_x emissions would be required. Emissions of VOC for the construction activities are exempt from a General Conformity Determination because they are below the emissions threshold requiring such an analysis.

2.0 REGULATORY BACKGROUND – GENERAL CONFORMITY

The U.S. Environmental Protection Agency (EPA), in conjunction with the U.S. Department of Transportation (DOT), established the General Conformity Rule on 30 November 1993. The rule implements the Federal Clean Air Act (CAA) conformity provision in Title I, Section 176(c)(1), "Limitation on Certain Federal Assistance," which mandates that the Federal government not engage, support, or provide financial assistance for licensing or permitting, or approving any activity not conforming to an approved CAA implementation plan. In Texas, the applicable plan is the Texas State Implementation Plan (SIP), an EPA-approved plan for the regulation and enforcement of the National Ambient Air Quality Standards in each air quality region within the state.

The General Conformity Rule is codified at Title 40 Code of Federal Regulations (CFR) Part 51, Subpart W, and Title 40 CFR Part 93, "Determining Conformity of Federal Actions to State or Federal Implementation Plans." The Texas Commission on Environmental Quality (TCEQ), formerly the Texas Natural Resource Conservation Commission (TNRCC), has promulgated its own corresponding regulations in 30 TAC 101.30, "Conformity of General Federal Actions to State Implementation Plans." This rule applies to all Federal actions except programs and projects requiring funding or approval from the DOT, the Federal Highway Administration, the Federal Transit Administration, or the Metropolitan Planning Organization. These types of programs and projects must instead comply with the conformity provisions implemented in the Transportation Conformity Rule issued by the DOT on 24 November 1993.

Title I, Section 176(c)(1), of the CAA defines conformity as the upholding of "an implementation plan's purpose of eliminating or reducing the severity and number of violations of the National Ambient Air Quality Standards (NAAQS) and achieving attainment of such standards." Conforming activities or actions should not, through additional air pollutant emissions, result in the following:

- Cause or contribute to new violations of any NAAQS in any area;
- Increase the frequency or severity of existing violations of any existing violation of any NAAQS; or
- Delay timely attainment of any NAAQS or interim emission reductions.

The General Conformity Rule establishes conformity in coordination with and as part of the National Environmental Policy Act (NEPA) process. The rule takes into account air pollution emissions associated with actions that are Federally funded, licensed, permitted, or approved, and ensures emissions do not contribute to air quality degradation, thus preventing the achievement of State and Federal air quality goals. In short, general conformity refers to the process of evaluating plans, programs, and projects to determine and demonstrate they meet the requirements of the CAA and the SIP. The purpose of this General Conformity requirement is to assure Federal agencies consult with state and local

air quality districts to assure these regulatory entities know about the expected impacts of the Federal action and can include expected emissions in their SIP emissions budget.

Pursuant to the General Conformity Rule, a Federal agency must make a General Conformity Determination for all Federal actions in nonattainment or maintenance areas where the total of direct and indirect emissions of a nonattainment pollutant or its precursors exceeds levels established by the regulations.

This Draft General Conformity Determination has been prepared pursuant to the CAA, Section 176(c)(1), to assess whether the emissions that would result from the USACE action in approving the Brays Bayou Federal Flood Control Project are in conformity with the Texas SIP for the HGA. The following discussion focuses on the project proposed by the HCFCD as described in the EA prepared on behalf of the HCFCD for submittal to the USACE (HCFCD, 2003) for the Brays Bayou Federal Flood Control Project. EPA's conformity guidance (EPA, 1994) recommends that when needed, a conformity determination is required for "only the one alternative that the Federal agency ultimately approves, permits or funds." This proposed alternative has been identified in the EA as the "Recommended Plan."

3.0 APPLICABILITY

The General Conformity Rule applies to all nonattainment and maintenance areas. The proposed Brays Bayou Federal Flood Control Project would be located within Harris County, a county included in the HGA, which has been designated as "Severe-17" nonattainment for ozone. This area is in attainment with all other criteria pollutants. Therefore, a conformity determination is required for each pollutant where the total of direct or indirect emissions caused by the Federal action would equal or exceed 25 tons per year (tpy) of NO_x or 25 tpy of VOC (40 CFR 51.853). The rule does not apply (i.e., a General Conformity Determination is not required) to actions where the total of direct or indirect emissions is below these emissions levels. In addition, even if the total of direct and indirect emissions of VOC or NO_x is below 25 tpy, when the total of direct and indirect emissions of any pollutant from the Federal action represents 10 percent or more of a nonattainment or maintenance area's total emissions of those pollutants, then the action is defined as a regionally significant action and a conformity determination would be applicable.

Consistent with Section 176 (c)(1) of the CAA, a Federal action is generally defined as any activity engaged in or supported in any way by any department, agency, or instrumentality of the Federal government (40 CFR 51.852). Federal actions include providing Federal financial assistance or issuing a Federal license, permit, or approval. Where the Federal Action is a permit, license, or other approval for some aspect of a non-Federal undertaking, the relevant activity is the part, portion, or phase of the non-Federal undertaking that requires the Federal Permit, license, or approval.

The proposed project was authorized by Congress in 1990. As a currently authorized Federal project, the Brays Bayou Federal Flood Control Project only requires an Environmental Assessment. Section 211(f) of the Water Resources Development Act of 1996 has given the HCFCD, as the local sponsor representing Harris County, the authority to conduct the General Reevaluation of the Diversion Element subject to approval by the USACE. As the project is Federally funded, it is considered a Federal action and, therefore, in accordance with Section 176(c)(1) of the CAA and regulations promulgated because of it, it must be assessed as to whether the emissions that would result from the project are in conformity with the applicable SIP for the HGA.

The Recommended Plan was identified based on optimization of the net economic benefit and refined based on environmental constraints, as described in the EA. It consists of the following major components:

- Downstream channel modifications (Houston Ship Channel to Calhoun Street)
- Middle reach channel modifications (Calhoun Street to Fondren)
- 1,865 acre-feet (237 acres) of stormwater detention on Willow Waterhole Bayou

- 12 bridge replacements to raise/widen bridges, including the removal of abandoned railroad piers
- 18 bridge modifications to widen existing roadway bridges and pedestrian crossings

Therefore, the relevant emissions to consider are those related to construction activities associated the channel modifications, the stormwater detention, and the bridge replacements/ modifications. Although the total emissions from the project are considered in the EA, only those air emissions of NO_x and VOC from the construction activities should be considered in the General Conformity Determination.

4.0 AIR EMISSIONS INVENTORY

The evaluation of an air emissions inventory associated with the Recommended Plan is based on the identification of air contaminants and estimated emission rates for the project. For purposes of the EA, air emissions for this alternative were analyzed for only the construction related emission sources, as the project is intended to alleviate flood conditions.

In order to estimate annual NO_x and VOC emissions from construction equipment for the Recommended Plan, preliminary determinations were made identifying the typical types of equipment that would be used during the anticipated construction period and the estimated duration of each equipment's use. Although a specific schedule of equipment activities was not available, certain assumptions of the type of equipment and use were made by the HCFCD based on the projected activity and volume of excavation projected for the duration of the project. It is anticipated that the total construction period will be about 10 years (2003 to 2012) for bridge improvements and 10 years for detention basin and channel excavation (2003 to 2012). Typical equipment to be used, values for horsepower, and load factors were provided by the HCFCD based on the anticipated need. Emission factors were obtained using the US EPA's NONROAD Model, Version 2.2.0, as updated in April 2000 in Support of the 2007 "Heavy-Duty Diesel Engine Rule," May 2000. Construction emissions of NO_x and VOC would be primarily combustion products from burning of diesel fuel in construction equipment including the use of earth-moving equipment, such as bulldozers, loaders, rollers, backhoes, and end-dump trucks and cranes for the bridge modifications. The construction emissions were calculated on an annual basis based on the anticipated type of equipment, activity and volume of excavation anticipated. Emissions for NO_x and VOC were estimated for each year for which construction is projected to occur from the year 2003 to 2012. Credit for expected reductions in NO_x emissions was assumed based on a proposed SIP revision (TNRCC, 2001) for the use of low-emission diesel fuel in non-road diesel equipment in the HGA starting April 2005, and for a proposal by the HCFCD to mandate upgrades of the construction equipment drive trains and engines at a rate of 20 percent of the fleet per year beginning in 2005. The basis, emission factors, and summary of emissions are found in Appendix A of this document.

For comparison with the thresholds defined in the General Conformity Rule, the average emissions of NO_x and VOC are summarized on Tables 1 and 2 for each year of the anticipated construction activities. Emissions of CO, SO_2, and PM_{10} are not considered in the General Conformity evaluation as this area is in attainment with the NAAQS for each of those pollutants.

As shown on Table 1, the NO_x emissions estimates show the project would exceed the conformity threshold (25 tpy) for the years 2004, 2006, 2007, and 2008. Therefore, a General Conformity Determination for NO_x emissions would be required. Emissions of VOC for the construction activities are exempt from a General Conformity Determination because they are below the 25 tpy threshold.

TABLE 1

SUMMARY OF NO_x CONSTRUCTION EMISSIONS (tpy)
RECOMMENDED PLAN

	Year									
Activity	2003	2004	2005	2006	2007	2008	2009	2010	2011	2012
Bridge Modifications	0.55	2.40	1.52	1.19	1.15	1.08	0.75	0.68	0.57	0.11
Brays Bayou Excavation	-	7.40	-	25.21	-	9.90	-	9.14	19.08	15.90
Willow Waterhole Excavation	24.30	31.80	24.80	31.80	29.48	31.80	31.80	25.48	10.22	12.90
Subtotals	24.85	41.60	26.32	58.20	30.63	42.78	32.55	35.30	29.87	28.91
Estimated Emissions Reductions Due to Use of Low Emissions Diesel Fuel			(0.92)	(4.07)	(2.14)	(2.99)	(2.28)	(2.47)	(2.09)	(2.02)
Estimated Emissions Reductions Due to Conversion of Fleet – 20% Vehicle Conversion per Year Beginning 2005			(0.53)	(3.28)	(3.27)	(7.28)	(7.94)	(8.62)	(7.29)	(7.05)
Totals	24.85	41.60	24.87	50.85	25.22	32.51	22.33	24.21	20.49	19.84
Percent of SIP Construction Emissions Budget (8827.5 tpy)	0.28	0.47	0.28	0.58	0.29	0.37	0.25	0.27	0.23	0.22

TABLE 2

SUMMARY OF VOC CONSTRUCTION EMISSIONS (tpy)
RECOMMENDED PLAN

	Year									
Activity	2003	2004	2005	2006	2007	2008	2009	2010	2011	2012
Bridge Modifications	0.05	0.21	0.13	0.10	0.10	0.09	0.07	0.06	0.05	0.01
Brays Bayou Excavation	-	0.60	-	2.03	-	0.80	-	0.74	1.53	1.28
Willow Waterhole Excavation	1.96	2.56	2.00	2.56	2.37	2.56	2.56	2.05	0.82	1.04
Subtotals	2.01	3.37	2.13	4.69	2.47	3.45	2.63	2.85	2.40	2.33
Estimated Emissions Reductions Due to Use of Low Emissions Diesel Fuel			(0.11)	(0.47)	(0.25)	(0.34)	(0.26)	(0.28)	(0.24)	(0.23)
Estimated Emissions Reductions Due to Conversion of Fleet – 20% Vehicle Conversion per Year Beginning 2005			(0.02)	(0.17)	(0.18)	(0.43)	(0.49)	(0.53)	(0.45)	(0.44)
Totals	2.01	3.37	2.00	4.05	2.04	2.68	1.88	2.04	1.71	1.66

5.0 PRELIMINARY GENERAL CONFORMITY DETERMINATION

A Federal action required to have a conformity determination for a specific pollutant will be determined to conform to the applicable SIP if, for each pollutant that exceeds the threshold rates (e.g., 25 tpy of NO_x or VOC), the total of direct and indirect emissions from the action is in compliance or consistent with all relevant requirements and milestones contained in the applicable SIP. Under the TCEQ General Air Quality Rules §101.30, "Conformity of General Federal Actions to State Implementation Plan," a Federal action required to have a conformity determination for a specific pollutant will be determined to conform to the SIP if it meets one of several requirements in §101.30(h), "Criteria for Determining Conformity of General Federal Actions."

Based on available information, it is believed that the Federal action can meet the requirements of TCEQ Chapter 101, 101.30(h)(1)(E)(i)(I). This section of the TCEQ's General Conformity Rule applies to ozone or nitrogen dioxide, where the EPA has approved a revision to an area's attainment demonstration after 1990 and the state makes a determination that "the total of direct and indirect emissions from the action, or portion thereof, is determined and documented by the TCEQ to result in a level of emissions which, together with all other emissions in the HGA nonattainment area, would not exceed the emissions budgets specified in the SIP."

The emissions budget for General Conformity purposes is defined in the TCEQ General Air Quality Rules §101.30 (8). In summary, the budget is established by the allowable emissions allocated to a subcategory of the emissions inventory in the applicable SIP revision. The applicable SIP for General Conformity purposes is the most recent revision approved under the CAA. For the HGA, the most recently approved SIP is the Post-1999 Rate of Progress and Attainment Demonstration SIP approved by the EPA in October 2001. Based on information provided by the TCEQ in response to a previous general conformity evaluation for NO_x emissions from another project in the HGA (see letter from the TNRCC in Appendix B), the construction emissions budgets in this SIP are 5.5 tons per day or 1,512.2 tons per year for VOC and 32.1 tons per day or 8,827.5 tons per year for NO_x.

The project sponsors participated in a meeting with the TCEQ to discuss the project emissions and the proposed approach to General Conformity Determination. During this meeting, the TCEQ staff was informed of the project and provided with a preliminary estimate of construction emissions. The TCEQ staff recognized that the Brays Bayou Federal Flood Control Project construction project is not unusual in scope for an area like the HGA. However, as the SIP is intended to demonstrate attainment with the ozone standard during the years 2005, 2006, and 2007, the TCEQ requested that the sponsors investigate the feasibility of using equipment, not currently available on the market, that would reduce emissions of NO_x during these years and thereafter, preferably below the 25 tpy threshold level. This equipment, once available, could be purchased through funding appropriated under Texas Senate

Bill 5, recently passed by the State Legislature to encourage the use of innovative technology to reduce emissions.

In response to this request, the HCFCD will encourage contractors to utilize low-emission mobile construction equipment when feasible. Contract documents will reference the availability of SB 5 grant (or equivalent) to modify or purchase diesel equipment with low NO_x diesel emissions technology. The HCFCD will also encourage contractors to maintain construction equipment engines in proper operating condition. In addition, the HCFCD will mandate upgrades of the construction equipment drive trains and engines at a rate of 20 percent of the fleet per year beginning in 2005.

Based on an evaluation of the proposed project emissions and consideration of the interaction and information exchanged during the meeting with the TCEQ, it is believed that emissions of NO_x resulting from the Federal action subject to conformity review can be accounted for in the SIP construction emissions budget in the SIP as they would represent an average of 0.4 percent of the construction emissions budget for NO_x on an annual basis (see Table 1). As the emissions from each phase of the project will be less than an increase of 10 percent of the VOC and NO_x emissions inventories for the entire HGA nonattainment area, the Federal action is not considered regionally significant for purposes of General Conformity. Because of this, it is expected that emissions from the project construction will not:

- Cause or contribute to any new violation of any of the NAAQS in the project area;
- Increase the frequency or severity of any existing violation of any NAAQS in the project area; or
- Delay timely attainment of the NAAQS or any required interim emission reduction in the project area.

Pursuant to the General Conformity Rule (40 CFR 51.855), this Draft General Conformity Determination is being provided to demonstrate that the applicant's proposed project will comply with the requirements of the General Conformity Rule and will be in conformity with the Texas SIP. As previously noted, it appears that the TCEQ acknowledges that the Brays Bayou Federal Flood Control Project is not unusual in scope for an area like the HGA, and that construction activities such as these are considered in the SIP. However, as specified in the TCEQ General Rules, Chapter 101, 101.30(h)(1)(E)(i)(I), the state must make a determination and document that the total of direct and indirect emissions from the action, or portion thereof, would result in a level of emissions which, together with all other emissions in the HGA nonattainment area, would not exceed the emissions budgets specified in the SIP. Therefore, it is requested that the TCEQ review this draft and provide a formal determination and confirmation. Once written confirmation is received, this information will be relied upon as a basis for making a Final General Conformity Determination for the applicant's proposed project.

6.0 REFERENCES

40 Code of Federal Regulations (CFR) Part 51, Subpart W (58 Federal Register (FR) 63,214). 1993. Preamble to the adoption of the Federal conformity requirements, 30 November.

40 CFR Part 93, Subpart B. (58 Federal Register (FR) 63,253). 1993. Determining Conformity of General Federal Actions to State or Federal Implementation Plans, 30 November.

30 TAC 101.30 (19 Texas Register 9515). 1994. Preamble to the adoption of the TCEQ conformity requirements, 2 December.

Harris County Flood Control District (HCFCD). 2003. Draft Brays Bayou Federal Flood Control Project, Harris County, Texas, Alternative to the Diversion Separable Element, General Reevaluation Report, Appendix 1, Environmental Assessment, August 2003.

Texas Commission on Environmental Quality (TCEQ). 1999. General Air Quality Rules, Chapter 101, §101.30, "Conformity of General Federal Actions to State Implementation Plan." Effective December 23.

Texas Natural Resource Conservation Commission (TNRCC). 2001. Post-1999 Rate-of-Progress and Attainment Demonstration Follow-up SIP for the Houston/Galveston Ozone Nonattainment Area. Texas Natural Resource Conservation Commission, Austin, Texas. September 26.

U.S. Army Corp of Engineers (USACE). 1994. Memorandum regarding the U.S. EPA's Clean Air Act General Conformity Rule. 20 April.

U.S. Environmental Protection Agency (EPA). 1994. "General Conformity Guidance: Questions and Answers," Office of Air Quality Planning and Standards (MD-15), U.S. Environmental Protection Agency, July 13.

APPENDIX A

ESTIMATE OF NO_x AND VOC EMISSIONS FROM PROJECT CONSTRUCTION EQUIPMENT

TABLE 1

PRELIMINARY NOX EMISSIONS SUMMARY - TONS PER YEAR
CONSTRUCTION EQUIPMENT
BRAYS BAYOU FEDERAL FLOOD CONTROL PROJECT
HARRIS COUNTY, TEXAS

	Avg. Equipment Hours Per Year	Avg. Work Days Per Year	Avg Equipment Use Day Per Work Day	HP	2003	2004	2005	2006	2007	2008	2009	2010	2011	2012
Bridge Construction														
Excavator	421	180	0.3	77	0.04	0.19	0.12	0.09	0.09	0.08	0.06	0.05	0.04	0.01
Dozer	337	180	0.2	300	0.11	0.49	0.31	0.24	0.23	0.22	0.15	0.14	0.12	0.02
Dump Truck	337	180	0.2	280	0.11	0.49	0.31	0.24	0.23	0.22	0.15	0.14	0.12	0.02
Transport Truck	76	180	0.1	300	0.03	0.11	0.07	0.05	0.05	0.05	0.03	0.03	0.03	0.01
Cement Truck	351	180	0.2	300	0.12	0.51	0.33	0.25	0.24	0.23	0.16	0.15	0.12	0.02
Crane	76	180	0.1	300	0.03	0.11	0.07	0.05	0.05	0.05	0.03	0.03	0.03	0.01
Concrete Pump	351	180	0.2	300	0.12	0.51	0.33	0.25	0.24	0.23	0.16	0.15	0.12	0.02
SUBTOTALS					0.55	2.40	1.52	1.19	1.15	1.08	0.75	0.68	0.57	0.11
Brays Bayou Excavation														
Backhoe				214		0.18		0.61		0.24		1.05	0.46	0.39
Dozer				300		0.18		0.61		0.24		1.05	0.46	0.39
Tractor				214		0.00		0.00		0.00		0.00	0.00	0.00
Dump Truck				280		7.04		23.98		9.42		7.04	18.15	15.12
SUBTOTALS					0.00	7.40	0.00	25.21	0.00	9.90	0.00	9.14	19.08	15.90
Willow Waterhole Excavation														
Backhoe				214	0.59	0.77	0.60	0.77	0.72	0.77	0.77	0.62	0.25	0.31
Dozer				300	0.39	0.52	0.40	0.52	0.48	0.52	0.52	0.41	0.17	0.21
Tractor				214	0.20	0.26	0.20	0.26	0.24	0.26	0.26	0.21	0.08	0.10
Dump Truck				280	23.12	30.25	23.59	30.25	28.04	30.25	30.25	24.24	9.72	12.27
SUBTOTALS					24.30	31.80	24.80	31.80	29.48	31.80	31.80	25.48	10.22	12.90
PROJECT SUBTOTALS					**24.85**	**41.60**	**26.32**	**58.20**	**30.62**	**42.77**	**32.54**	**35.31**	**29.87**	**28.91**
Emissions Reduction Due to Use of Low Emissions Diesel*							0.92	4.07	2.14	2.99	2.28	2.47	2.09	2.02
Emissions Reduction Due to Conversion of Fleet @ 20% per Year Starting 2005**							0.53	3.28	3.27	7.28	7.94	8.62	7.29	7.05
PROJECT TOTALS					**24.85**	**41.60**	**24.87**	**50.85**	**25.21**	**32.50**	**22.33**	**24.22**	**20.49**	**19.83**
% of SIP NOx Emissions Construction Budget (8827.5 tons/yr)					**0.28%**	**0.47%**	**0.30%**	**0.66%**	**0.35%**	**0.48%**	**0.37%**	**0.40%**	**0.34%**	**0.33%**

* Per TNRCC SIP Revision, "Post-1999 Rate-of-Progress and Attainment Demonstration Follow-up SIP for the Houston/Galveston Ozone Nonattainment Area," September 26, 2001.
7% reduction based on use of Low Emissions Diesel in the HGA starting April 1, 2005 that does not exceed 500 ppm Sulfur, contains less than 10 vol% aromatic hydrocarbons, and a minimum cetane number of 48.

** Reduction estimated by comparison to 2003 emissions using NONROAD Emissions Model.

TABLE 2

PRELIMINARY VOC EMISSIONS SUMMARY - TONS PER YEAR
CONSTRUCTION EQUIPMENT
BRAYS BAYOU FEDERAL FLOOD CONTROL PROJECT
HARRIS COUNTY, TEXAS

	Avg. Equipment Hours Per Year	Avg. Work Days Per Year	Avg Equipment Use Day Per Work Day	HP	2003	2004	2005	2006	2007	2008	2009	2010	2011	2012
Bridge Construction														
Excavator	421	180	0.3	77	0.007	0.032	0.020	0.016	0.015	0.014	0.010	0.009	0.008	0.002
Dozer	337	180	0.2	300	0.009	0.039	0.025	0.019	0.019	0.017	0.012	0.011	0.009	0.002
Dump Truck	337	180	0.2	280	0.009	0.039	0.025	0.019	0.019	0.017	0.012	0.011	0.009	0.002
Transport Truck	76	180	0.1	300	0.002	0.009	0.006	0.004	0.004	0.004	0.003	0.002	0.002	0.000
Cement Truck	351	180	0.2	300	0.009	0.041	0.026	0.020	0.019	0.018	0.013	0.012	0.010	0.002
Crane	76	180	0.1	300	0.002	0.009	0.006	0.004	0.004	0.004	0.003	0.002	0.002	0.000
Concrete Pump	351	180	0.2	300	0.009	0.041	0.026	0.020	0.019	0.018	0.013	0.012	0.010	0.002
SUBTOTALS					0.05	0.21	0.13	0.10	0.10	0.09	0.07	0.06	0.05	0.01
Brays Bayou Excavation														
Backhoe				214		0.01		0.05		0.02		0.08	0.04	0.03
Dozer				300		0.01		0.05		0.02		0.08	0.04	0.03
Tractor				214		0.00		0.00		0.00		0.00	0.00	0.00
Dump Truck				280		0.57		1.93		0.76		0.57	1.46	1.22
SUBTOTALS					0.00	0.60	0.00	2.03	0.00	0.80	0.00	0.74	1.53	1.28
Willow Waterhole Excavation														
Backhoe				214	0.05	0.06	0.05	0.06	0.06	0.06	0.06	0.05	0.02	0.03
Dozer				300	0.03	0.04	0.03	0.04	0.04	0.04	0.04	0.03	0.01	0.02
Tractor				214	0.02	0.02	0.02	0.02	0.02	0.02	0.02	0.02	0.01	0.01
Dump Truck				280	1.86	2.43	1.90	2.43	2.26	2.43	2.43	1.95	0.78	0.99
SUBTOTALS					1.96	2.56	2.00	2.56	2.37	2.56	2.56	2.05	0.82	1.04
PROJECT SUBTOTALS					**2.00**	**3.36**	**2.13**	**4.69**	**2.47**	**3.45**	**2.62**	**2.85**	**2.41**	**2.33**
Emissions Reduction Due to Use of Low Emissions Diesel*							0.11	0.47	0.25	0.34	0.26	0.28	0.24	0.23
Emissions Reduction Due to Conversion of Fleet @ 20% per Year Starting 2005**							0.02	0.17	0.18	0.43	0.49	0.53	0.45	0.44
PROJECT TOTALS					**2.00**	**3.36**	**2.00**	**4.06**	**2.04**	**2.67**	**1.87**	**2.03**	**1.71**	**1.66**
% of SIP VOC Emissions Construction Budget (1512.2 tons/yr)					**0.13%**	**0.22%**	**0.14%**	**0.31%**	**0.16%**	**0.23%**	**0.17%**	**0.19%**	**0.16%**	**0.15%**

* Per TNRCC SIP Revision, "Post-1999 Rate-of-Progress and Attainment Demonstration Follow-up SIP for the Houston/Galveston Ozone Nonattainment Area," September 26, 2001.
10% reduction based on use of Low Emissions Diesel in the HGA starting April 1, 2005 that does not exceed 500 ppm Sulfur, contains less than 10 vol% aromatic hydrocarbons, and a minimum cetane number of 48.

** Reduction estimated by comparison to 2003 emissions using NONROAD Emissions Model.

TABLE 3

PRELIMINARY BRIDGE DEMOLITION/CONSTRUCTION SCHEDULE
BRAYS BAYOU FEDERAL FLOOD CONTROL PROJECT
HARRIS COUNTY, TEXAS

Discrete Segment	Bridges	Proposed	Start	Finish	Duration Days	Duration Years	Duration (Estimated Actual Working Days/Year)									
							2003	2004	2005	2006	2007	2008	2009	2010	2011	2012
107	Fannin Bridge	Lengthen	6/2/2003	11/14/2004	531	1.45	105	173								
104	Calhoun Bridge	Lengthen	8/6/2003	12/20/2004	502	1.38	75	187.5								
109	Texas and New Orleans RR Bridge	Lengthen	3/9/2004	5/27/2004	79	0.22		82.5								
106	Holcombe Bridge	Lengthen	3/17/2004	8/1/2005	502	1.38		172.5	105							
107	Braeswood Bridge	Lengthen	4/26/2004	9/8/2005	500	1.37		120	135							
110	Loop 610 D/S Bridge	Lengthen	7/14/2004	11/24/2005	498	1.36		83	173							
111	Pedestrian Crossing @ Atwell	Lengthen	1/18/2005	11/15/2005	301	0.82			150							
106	South Macgregor Bridge	Lengthen	6/21/2005	11/3/2006	500	1.37			97.5	165						
110	Loop 610 U/S Bridge	Lengthen	11/25/2005	4/11/2007	502	1.38			22.5	180	67.5					
108	Braeswood Bridge	Lengthen	3/3/2006	7/18/2007	502	1.38				150	112.5					
111	Chimney Rock Bridge	Lengthen	6/29/2007	11/12/2008	502	1.38					90	172.5				
111	Pedestrian Crossing @ Bobwhite	Lengthen	7/31/2007	5/27/08	301	0.82					75	90				
109	Buffalo Speedway Bridge	Lengthen	12/28/2007	5/13/2009	502	1.38					6	180	82.5			
111	Hillcroft Bridge	Lengthen	11/14/2008	3/31/2010	502	1.38						22.5	180	60		
111	Fondren Bridge	Lengthen	3/27/2009	8/11/2010	502	1.38							135	127.5		
110	South Rice Bridge	Lengthen	3/27/2009	8/11/2010	502	1.38							135	127.5		
109	Stella Link Bridge	Lengthen	5/14/2009	9/28/2010	502	1.38							112.5	150		
111	North Braeswood Bridge	Lengthen	8/12/2010	12/27/2011	502	1.38								67.5	187.5	
105	Abandoned RR Piers	Remove	10/2/2003	12/31/2003	90	0.25	45									
101	Forest Hill Bridge	Replace	4/16/2003	4/13/2004	363	0.99	127.5	67.5								
101	South 75th Street Bridge	Replace	1/14/2004	1/11/2005	363	0.99		173	8							
102	Lawndale Bridge	Replace	1/14/2004	5/30/2005	502	1.38		172.5	90							
105	Ardmore Bridge	Replace	1/21/2004	6/6/2005	502	1.38		172.5	90							
106	Almeda Bridge	Replace	2/4/2004	6/20/2005	502	1.38		165	97.5							
104	Scott Street Bridge	Replace	6/7/2005	10/20/2006	500	1.37			105	157.5						
107	South Braeswood Bridge	Replace	8/2/2005	12/15/2006	500	1.37			75	187.5						
105	SH288 Bridge (TxDOT)	Replace	12/9/2005	5/27/2008	900	2.47				15	180	90				
107	Greenbriar Bridge	Replace	12/18/2006	5/1/2008	500	1.37				7.5	180	75				
108	South Main Bridge	Replace	2/4/2008	6/18/2009	500	1.37						165	97.5			
108	Kirby Drive Bridge	Replace	5/14/2009	9/28/2010	502	1.38							112.5	150		
110	Braeswood Bridge	Replace	9/29/2010	2/13/2012	502	1.38								45	180	37.5
						TOTAL	353	1568	1148	863	711	795	855	728	368	38

TABLE 4

PRELIMINARY SCHEDULE OF CHANNEL EXCAVATION
BRAYS BAYOU FEDERAL FLOOD CONTROL PROJECT
HARRIS COUNTY, TEXAS

Year	Brays Segment	Willow Waterhole Phase	Excavation Volume (cy)	
			Brays Bayou	Willow Waterhole
2003		Phase 1		535,000
2004	Mouth-Lawndale		163,000	700,000
2005		Phase 2		546,000
2006	Lawndale- Spur 5		555,000	700,000
2007		Phase 3		649,000
2008	Spur 5 - Calhoun		218,000	700,000
2009		Phase 4		700,000
2010	Calhoun - Fondren		950,000	561,000
2011	Greenbriar - Loop 610		420,000	225,000
2012	Loop 610 - Fondren		350,000	284,000
Total			2,656,000	5,600,000

TABLE 5

NONROAD EMISSION FACTORS - CONSTRUCTION EQUIPMENT - 2003
BRAYS BAYOU FEDERAL FLOOD CONTROL PROJECT
HARRIS COUNTY, TEXAS

Range	HP	THC exhaust		CO exhaust		NOx exhaust		SOx exhaust		PM exhaust	
		(tons/yr)	(tpd/day/unit)	(tons/yr)	(tpd/day/unit)	(tons/yr)	(tpd/day/unit)	(tons/yr)	(tpd/day/unit)	(tons/yr)	(tpd/day/unit)
3 < HP <= 6	6	0.001797212	6.75134E-06	0.020873556	7.84128E-05	0.013082088	4.91436E-05	0.003574415	1.34275E-05	0.007594418	2.85289E-05
6 < HP <= 11	11	0.004285406	9.6308E-06	0.053129699	0.000119401	0.034327113	7.7145E-05	0.009351238	2.10155E-05	0.014279103	3.20901E-05
11 < HP <= 16	16	0.006401626	1.50213E-05	0.039694302	9.3142E-05	0.050772712	0.000119137	0.021649155	5.07994E-05	0.022241167	5.21885E-05
16 < HP <= 25	25	0.053594389	4.85457E-05	0.218328573	0.000197762	0.196053172	0.000177585	0.078509848	7.11141E-05	0.065651134	5.94667E-05
25 < HP <= 40	40	0.127733974	5.84658E-05	0.706896848	0.000323558	0.658206915	0.000301271	0.265782086	0.000121653	0.167610323	7.67178E-05
40 < HP <= 50	50	0.084682238	7.53256E-05	0.509681699	0.000453366	0.481168615	0.000428004	0.191443628	0.000170291	0.109541438	9.74381E-05
50 < HP <= 100	100	1.565748903	0.000143578	8.176984212	0.000749825	9.294907245	0.000852337	3.296773066	0.000302312	1.562791751	0.000143307
100 < HP <= 175	175	0.981597552	0.000163438	4.97145108	0.000827757	10.08365791	0.001678951	3.022136477	0.000503192	0.836837081	0.000139335
175 < HP <= 300	300	0.832911993	0.000222486	3.8465777	0.001027491	10.35283276	0.002765429	3.135551296	0.000837563	0.680909466	0.000181883
300 < HP <= 600	600	0.333256523	0.000348239	1.968563186	0.002057067	4.877174836	0.005096446	1.429615945	0.001493889	0.268066746	0.000280119
600 < HP <= 750	750	0.105726135	0.000534661	0.913976115	0.004622011	1.951168177	0.00986713	0.574319431	0.002904355	0.097162249	0.000491353
750 < HP <= 1000	1000	0.135145506	0.000792956	0.916644508	0.005378344	2.004198389	0.011759486	0.50997506	0.002992241	0.110038203	0.000645641
1000 < HP <= 1500	1500	0.045065175	0.001568545	0.303142368	0.01055122	0.70034673	0.024376375	0.18225056	0.006343441	0.035901258	0.001249585
1500 < HP <= 2000	2000	0.083441914	0.002571013	0.561562859	0.017302877	1.242358357	0.03827955	0.335328775	0.010332151	0.064195626	0.001977996
2000 < HP <= 3000	3000	0.017516671	0.003086545	0.120725158	0.021272515	0.283590973	0.049970473	0.077450928	0.01364733	0.013827607	0.002436509

TABLE 6

NONROAD EMISSION FACTORS - CONSTRUCTION EQUIPMENT - 2004
BRAYS BAYOU FEDERAL FLOOD CONTROL PROJECT
HARRIS COUNTY, TEXAS

Range	HP	THC exhaust		CO exhaust		NOx exhaust		SOx exhaust		PM exhaust	
		(tons/yr)	(tpd/day/unit)	(tons/yr)	(tpd/day/unit)	(tons/yr)	(tpd/day/unit)	(tons/yr)	(tpd/day/unit)	(tons/yr)	(tpd/day/unit)
3 < HP <= 6	6	0.001722377	6.29753E-06	0.02187644	7.99868E-05	0.013169994	4.81535E-05	0.003695439	1.35116E-05	0.007807043	2.85449E-05
6 < HP <= 11	11	0.004130805	9.03559E-06	0.055626688	0.000121676	0.034537617	7.55465E-05	0.009656758	2.11229E-05	0.014654645	3.20551E-05
11 < HP <= 16	16	0.00597413	1.36441E-05	0.038784879	8.85791E-05	0.050415021	0.000115141	0.022202937	5.07083E-05	0.022623154	5.1668E-05
16 < HP <= 25	25	0.04359429	3.84338E-05	0.195311285	0.000172191	0.190547357	0.000167991	0.080597614	7.10568E-05	0.064705847	5.70462E-05
25 < HP <= 40	40	0.095479562	4.25361E-05	0.638739757	0.000284558	0.638279613	0.000284353	0.271541073	0.000120971	0.160807441	7.16396E-05
40 < HP <= 50	50	0.065420235	5.66388E-05	0.471425107	0.000408145	0.468984701	0.000406032	0.195820201	0.000169535	0.105235662	9.11097E-05
50 < HP <= 100	100	1.421642391	0.000126884	8.004273326	0.000714398	9.05781195	0.000808428	3.369675748	0.00030075	1.485143008	0.000132552
100 < HP <= 175	175	0.944951474	0.000153137	4.884671926	0.000791602	9.739360139	0.001578345	3.097976273	0.000502053	0.81987681	0.000132868
175 < HP <= 300	300	0.827224228	0.000215069	3.783928443	0.00098378	10.03597311	0.002609243	3.219597497	0.00083706	0.65487455	0.00017026
300 < HP <= 600	600	0.312580497	0.000317916	1.879549941	0.001911633	4.740335178	0.004821251	1.468075835	0.001493135	0.253279527	0.000257603
600 < HP <= 750	750	0.097387159	0.000479346	0.902499659	0.004442166	1.888709852	0.009296361	0.588865772	0.002898438	0.091559845	0.000450664
750 < HP <= 1000	1000	0.11952203	0.00068257	0.860012417	0.004911385	1.955108245	0.01116529	0.523067496	0.002987149	0.100161833	0.000572007
1000 < HP <= 1500	1500	0.039788466	0.001347922	0.285085694	0.009657907	0.685901791	0.023236437	0.186999063	0.006335006	0.032717163	0.001108366
1500 < HP <= 2000	2000	0.073521433	0.002204883	0.531132088	0.015928469	1.214465652	0.036421409	0.34390191	0.0103135	0.058418189	0.001751941
2000 < HP <= 3000	3000	0.015337805	0.002630485	0.113443098	0.019455874	0.276965671	0.047500547	0.07948797	0.013632455	0.012524321	0.002147963

TABLE 7

NONROAD EMISSION FACTORS - CONSTRUCTION EQUIPMENT - 2005
BRAYS BAYOU FEDERAL FLOOD CONTROL PROJECT
HARRIS COUNTY, TEXAS

Range	HP	THC exhaust		CO exhaust		NOx exhaust		SOx exhaust		PM exhaust	
		(tons/yr)	(tpd/day/unit)	(tons/yr)	(tpd/day/unit)	(tons/yr)	(tpd/day/unit)	(tons/yr)	(tpd/day/unit)	(tons/yr)	(tpd/day/unit)
3 < HP <= 6	6	0.001679741	5.98198E-06	0.022718679	8.0907E-05	0.012608459	4.49019E-05	0.003823467	1.36163E-05	0.007956974	2.83368E-05
6 < HP <= 11	11	0.004073754	8.67916E-06	0.057773309	0.000123086	0.033061185	7.04371E-05	0.009983581	2.12701E-05	0.014864532	3.1669E-05
11 < HP <= 16	16	0.00597726	1.32963E-05	0.039391679	8.76263E-05	0.05134025	0.000114206	0.022875093	5.08853E-05	0.022230939	4.94524E-05
16 < HP <= 25	25	0.034646894	2.97515E-05	0.174915493	0.000150201	0.186687361	0.000160309	0.083152601	7.14036E-05	0.064317293	5.52296E-05
25 < HP <= 40	40	0.082469815	3.57852E-05	0.61928678	0.00026872	0.634693991	0.000275406	0.279242302	0.000121168	0.159403334	6.91681E-05
40 < HP <= 50	50	0.057710046	4.86647E-05	0.462469266	0.000389983	0.467073905	0.000393866	0.201441705	0.000169868	0.104169219	8.7842E-05
50 < HP <= 100	100	1.31145305	0.000114007	7.982692147	0.000693951	8.946911363	0.000777772	3.462677996	0.000301017	1.430715585	0.000124375
100 < HP <= 175	175	0.93143237	0.000147023	4.887626215	0.000771491	9.503844697	0.00150014	3.192631673	0.000503943	0.814454408	0.000128558
175 < HP <= 300	300	0.834227671	0.000211252	3.790913636	0.000959975	9.814932748	0.00248544	3.319354294	0.000840562	0.637125926	0.00016134
300 < HP <= 600	600	0.297845737	0.000295055	1.821720249	0.001804652	4.650940626	0.004607364	1.51447696	0.001500287	0.24320885	0.00024093
600 < HP <= 750	750	0.091006219	0.000436295	0.901052522	0.004319753	1.844676258	0.008843598	0.606566248	0.002907951	0.087554195	0.000419745
750 < HP <= 1000	1000	0.106308968	0.00059133	0.815272606	0.004534852	1.921266943	0.010686807	0.539111604	0.002998741	0.092043306	0.000511979
1000 < HP <= 1500	1500	0.034953193	0.001153335	0.2690813	0.008878757	0.676016642	0.022306223	0.192779586	0.006361063	0.029876658	0.000985827
1500 < HP <= 2000	2000	0.064189623	0.001874983	0.503290643	0.014701154	1.194362882	0.034887422	0.354362849	0.010350963	0.05311986	0.001551635
2000 < HP <= 3000	3000	0.013277766	0.002217986	0.106688074	0.017821718	0.272096168	0.045452328	0.081959422	0.013690919	0.011318096	0.001890632

TABLE 8

NONROAD EMISSION FACTORS - CONSTRUCTION EQUIPMENT - 2006
BRAYS BAYOU FEDERAL FLOOD CONTROL PROJECT
HARRIS COUNTY, TEXAS

Range	HP	THC exhaust		CO exhaust		NOx exhaust		SOx exhaust		PM exhaust	
		(tons/yr)	(tpd/day/unit)	(tons/yr)	(tpd/day/unit)	(tons/yr)	(tpd/day/unit)	(tons/yr)	(tpd/day/unit)	(tons/yr)	(tpd/day/unit)
3 < HP <= 6	6	0.001683918	5.84196E-06	0.023377136	8.11015E-05	0.012135118	4.21E-05	0.00393217	1.36418E-05	0.008086671	2.80548E-05
6 < HP <= 11	11	0.004107255	8.52451E-06	0.059504077	0.000123499	0.031806695	6.60141E-05	0.010267096	2.13091E-05	0.015047823	3.12314E-05
11 < HP <= 16	16	0.006097349	1.32131E-05	0.040340053	8.74181E-05	0.052464818	0.000113693	0.023491237	5.09062E-05	0.021879624	4.74138E-05
16 < HP <= 25	25	0.031357442	2.62313E-05	0.168897754	0.000141287	0.187525757	0.00015687	0.085467713	7.14959E-05	0.065077788	5.44392E-05
25 < HP <= 40	40	0.066858622	2.82618E-05	0.594770054	0.000251416	0.626769317	0.000264942	0.286294612	0.00012102	0.156763467	6.62656E-05
40 < HP <= 50	50	0.047192061	3.87674E-05	0.44795788	0.000367989	0.46166698	0.000379251	0.20660778	0.000169724	0.102027137	8.38134E-05
50 < HP <= 100	100	1.216375137	0.000103011	7.984968076	0.000676219	8.858178649	0.000750168	3.549897581	0.000300628	1.382132179	0.000117048
100 < HP <= 175	175	0.923320598	0.000141978	4.91721823	0.000756113	9.278531486	0.001426746	3.279305805	0.000504254	0.810970438	0.000124702
175 < HP <= 300	300	0.788615667	0.000194543	3.828080782	0.000944348	9.190529618	0.002267208	3.410424824	0.000841316	0.621317417	0.000153273
300 < HP <= 600	600	0.282536924	0.00027266	1.783189407	0.001720854	4.433502231	0.004278519	1.557405106	0.001502963	0.235966665	0.000227718
600 < HP <= 750	750	0.085732726	0.000400397	0.905919068	0.004230903	1.744741887	0.008148447	0.622848705	0.002908883	0.084792273	0.000396004
750 < HP <= 1000	1000	0.094941361	0.000514459	0.778560079	0.004218784	1.842079985	0.009981679	0.553955958	0.003001721	0.085038217	0.000460797
1000 < HP <= 1500	1500	0.031253931	0.001004635	0.257428287	0.008274843	0.650316545	0.020903947	0.198059203	0.006366467	0.027598052	0.000887119
1500 < HP <= 2000	2000	0.05720495	0.0016278	0.484383523	0.013783413	1.145688926	0.03260124	0.363862133	0.010353907	0.049001486	0.001394366
2000 < HP <= 3000	3000	0.011796866	0.001919708	0.102174333	0.016626864	0.260630421	0.042412478	0.084203709	0.013702498	0.010408141	0.00169372

TABLE 9

NONROAD EMISSION FACTORS - CONSTRUCTION EQUIPMENT - 2007
BRAYS BAYOU FEDERAL FLOOD CONTROL PROJECT
HARRIS COUNTY, TEXAS

Range	HP	THC exhaust		CO exhaust		NOx exhaust		SOx exhaust		PM exhaust	
		(tons/yr)	(tpd/day/unit)	(tons/yr)	(tpd/day/unit)	(tons/yr)	(tpd/day/unit)	(tons/yr)	(tpd/day/unit)	(tons/yr)	(tpd/day/unit)
3 < HP <= 6	6	0.001652986	5.59267E-06	0.024411662	8.25938E-05	0.011473542	3.88193E-05	0.00405998	1.37364E-05	0.008241994	2.78857E-05
6 < HP <= 11	11	0.004017485	8.13176E-06	0.062142528	0.000125782	0.02999408	6.07107E-05	0.010595752	2.14468E-05	0.01525265	3.08728E-05
11 < HP <= 16	16	0.005222853	1.10379E-05	0.038274982	8.08895E-05	0.051179102	0.000108161	0.024093231	5.09181E-05	0.021341513	4.51027E-05
16 < HP <= 25	25	0.027088274	2.2099E-05	0.160750749	0.000131143	0.187439136	0.000152916	0.087711918	7.15566E-05	0.065516543	5.34493E-05
25 < HP <= 40	40	0.054809805	2.25951E-05	0.578201199	0.00023836	0.62217172	0.000256487	0.293289038	0.000120907	0.155119967	6.39474E-05
40 < HP <= 50	50	0.038931435	3.11896E-05	0.43818842	0.000351051	0.458768228	0.000367539	0.211724405	0.000169621	0.100609238	8.06024E-05
50 < HP <= 100	100	1.147845482	9.48003E-05	8.067644561	0.000666305	8.835672587	0.000729736	3.637389311	0.000300411	1.348021847	0.000111333
100 < HP <= 175	175	0.862873596	0.000129398	4.980944957	0.00074695	8.687053498	0.001302723	3.364102697	0.000504486	0.810919669	0.000121607
175 < HP <= 300	300	0.745090391	0.000179255	3.880190906	0.000933504	8.590672217	0.002066761	3.499461233	0.000841907	0.607341562	0.000146115
300 < HP <= 600	600	0.270937237	0.000254993	1.763582376	0.001659795	4.238064616	0.003988653	1.599459707	0.001505331	0.231408431	0.00021779
600 < HP <= 750	750	0.082048531	0.000373703	0.916666339	0.004175102	1.654958626	0.007537771	0.638781698	0.002909432	0.083083704	0.000378418
750 < HP <= 1000	1000	0.087774874	0.00046385	0.759690334	0.004014615	1.77921624	0.009402341	0.568362445	0.003003535	0.080713742	0.000426535
1000 < HP <= 1500	1500	0.028969842	0.000908159	0.251992012	0.007899552	0.629627514	0.019737828	0.203144314	0.006368253	0.026228635	0.000822226
1500 < HP <= 2000	2000	0.053150888	0.001474994	0.478416443	0.013276564	1.108658037	0.030766437	0.372948674	0.010349721	0.04677899	0.001298167
2000 < HP <= 3000	3000	0.0110437	0.00175265	0.100881097	0.01600997	0.252107314	0.040009779	0.086348305	0.013703595	0.009965415	0.001581525

TABLE 10

NONROAD EMISSION FACTORS - CONSTRUCTION EQUIPMENT - 2008
BRAYS BAYOU FEDERAL FLOOD CONTROL PROJECT
HARRIS COUNTY, TEXAS

Range	HP	THC exhaust		CO exhaust		NOx exhaust		SOx exhaust		PM exhaust	
		(tons/yr)	(tpd/day/unit)	(tons/yr)	(tpd/day/unit)	(tons/yr)	(tpd/day/unit)	(tons/yr)	(tpd/day/unit)	(tons/yr)	(tpd/day/unit)
3 < HP <= 6	6	0.00162655	5.37027E-06	0.025351992	8.37029E-05	0.011209864	3.70108E-05	0.004173584	1.37796E-05	0.008416259	2.77874E-05
6 < HP <= 11	11	0.003935805	7.77396E-06	0.064524875	0.000127449	0.029250643	5.77755E-05	0.010887615	2.15051E-05	0.015528444	3.06716E-05
11 < HP <= 16	16	0.004416044	9.10728E-06	0.036187413	7.46299E-05	0.050031407	0.000103181	0.024626742	5.07881E-05	0.021227388	4.37776E-05
16 < HP <= 25	25	0.023675515	1.88482E-05	0.154434267	0.000122946	0.187695968	0.000149426	0.089702371	7.14124E-05	0.065985219	5.25311E-05
25 < HP <= 40	40	0.04515663	1.81658E-05	0.565827086	0.000227624	0.618646327	0.000248872	0.299521879	0.000120493	0.153860084	6.18956E-05
40 < HP <= 50	50	0.03208507	2.50837E-05	0.430449326	0.00033652	0.457355183	0.000357554	0.216274474	0.000169081	0.099619748	7.78814E-05
50 < HP <= 100	100	1.036275435	8.3518E-05	8.164180986	0.000657987	8.442244384	0.000680397	3.716075077	0.000299495	1.318662953	0.000106277
100 < HP <= 175	175	0.8065121	0.000118024	5.05346259	0.000739515	8.135834901	0.001190584	3.439576745	0.000503342	0.812365373	0.00011888
175 < HP <= 300	300	0.703713325	0.00016521	3.941764808	0.000925406	8.049453108	0.001889765	3.578561399	0.000840137	0.59733667	0.000140236
300 < HP <= 600	600	0.262852036	0.000241406	1.757287882	0.001613913	4.020628361	0.00369259	1.637339892	0.001503751	0.228950759	0.000210271
600 < HP <= 750	750	0.080167369	0.000356313	0.929752123	0.004132391	1.574191442	0.006996677	0.653100425	0.002902781	0.082295518	0.000365772
750 < HP <= 1000	1000	0.082920866	0.000427612	0.749463551	0.003864882	1.718903529	0.008864153	0.581245157	0.002997403	0.077672849	0.000400548
1000 < HP <= 1500	1500	0.027150682	0.000830567	0.248119372	0.007590228	0.609413817	0.018642598	0.207653117	0.006352323	0.02512496	0.000768598
1500 < HP <= 2000	2000	0.049955963	0.001352837	0.475161593	0.012867654	1.07295477	0.029056244	0.380971193	0.010316923	0.045053995	0.001220089
2000 < HP <= 3000	3000	0.010483415	0.001623536	0.10023791	0.015523554	0.24390614	0.037773036	0.088243427	0.013666004	0.009631759	0.001491643

TABLE 11

NONROAD EMISSION FACTORS - CONSTRUCTION EQUIPMENT - 2009
BRAYS BAYOU FEDERAL FLOOD CONTROL PROJECT
HARRIS COUNTY, TEXAS

Range	HP	THC exhaust		CO exhaust		NOx exhaust		SOx exhaust		PM exhaust	
		(tons/yr)	(tpd/day/unit)	(tons/yr)	(tpd/day/unit)	(tons/yr)	(tpd/day/unit)	(tons/yr)	(tpd/day/unit)	(tons/yr)	(tpd/day/unit)
3 < HP <= 6	6	0.001615696	5.20859E-06	0.026399437	8.5105E-05	0.011130517	3.58819E-05	0.004307161	1.38852E-05	0.008644492	2.78676E-05
6 < HP <= 11	11	0.003898541	7.5187E-06	0.067149793	0.000129505	0.029027566	5.59824E-05	0.01123104	2.16601E-05	0.015916405	3.06963E-05
11 < HP <= 16	16	0.003937787	7.92939E-06	0.035218556	7.09184E-05	0.049818286	0.000100317	0.025297378	5.09405E-05	0.021454919	4.3203E-05
16 < HP <= 25	25	0.021046971	1.63603E-05	0.150539377	0.000117018	0.189574357	0.000147361	0.092183157	7.16561E-05	0.066967816	5.20557E-05
25 < HP <= 40	40	0.03842211	1.5092E-05	0.562611878	0.000220991	0.621593154	0.000244159	0.307446011	0.000120763	0.154344878	6.06259E-05
40 < HP <= 50	50	0.027296842	2.08369E-05	0.429199283	0.000327627	0.460732061	0.000351697	0.222030413	0.000169486	0.099851109	7.62208E-05
50 < HP <= 100	100	0.944264156	7.43071E-05	8.334322609	0.000655854	8.127088098	0.000639546	3.815978003	0.000300291	1.304183795	0.00010263
100 < HP <= 175	175	0.759462681	0.000108517	5.17185535	0.000738986	7.686224865	0.001098255	3.533935034	0.00050495	0.821450987	0.000117374
175 < HP <= 300	300	0.669205223	0.000153403	4.039592096	0.000926	7.609271615	0.001744282	3.677007209	0.000842884	0.594106557	0.000136188
300 < HP <= 600	600	0.257911426	0.000231281	1.768648077	0.001586027	3.841551548	0.003444894	1.684060544	0.001510174	0.228928646	0.000205291
600 < HP <= 750	750	0.079197072	0.000343697	0.949760182	0.004121737	1.495287752	0.006489199	0.671003411	0.002911998	0.0822822	0.000357085
750 < HP <= 1000	1000	0.079644255	0.000401026	0.74828536	0.003767776	1.666465389	0.008391007	0.597320113	0.003007634	0.075718475	0.000381259
1000 < HP <= 1500	1500	0.025799546	0.000770616	0.246941232	0.007375981	0.594347126	0.017752778	0.213287568	0.006370767	0.02436202	0.000727678
1500 < HP <= 2000	2000	0.047650862	0.001259972	0.477076424	0.012614732	1.047160012	0.027688736	0.391052793	0.010340118	0.043973436	0.001162734
2000 < HP <= 3000	3000	0.010123389	0.001530796	0.100757978	0.01523599	0.238003845	0.035989451	0.090613677	0.013702033	0.009441994	0.001427759

TABLE 12

NONROAD EMISSION FACTORS - CONSTRUCTION EQUIPMENT - 2010
BRAYS BAYOU FEDERAL FLOOD CONTROL PROJECT
HARRIS COUNTY, TEXAS

Range	HP	THC exhaust		CO exhaust		NOx exhaust		SOx exhaust		PM exhaust	
		(tons/yr)	(tpd/day/unit)	(tons/yr)	(tpd/day/unit)	(tons/yr)	(tpd/day/unit)	(tons/yr)	(tpd/day/unit)	(tons/yr)	(tpd/day/unit)
3 < HP <= 6	6	0.001626679	5.12314E-06	0.027149053	8.55045E-05	0.011215855	3.53237E-05	0.004416957	1.3911E-05	0.008842627	2.78494E-05
6 < HP <= 11	11	0.003927085	7.3992E-06	0.069057485	0.000130114	0.029271773	5.51523E-05	0.011515851	2.16975E-05	0.016270336	3.06557E-05
11 < HP <= 16	16	0.003874817	7.62276E-06	0.035547527	6.99311E-05	0.050556426	9.94575E-05	0.025899939	5.09518E-05	0.021870753	4.30254E-05
16 < HP <= 25	25	0.019309918	1.46641E-05	0.148585407	0.000112837	0.191761235	0.000145625	0.094405529	7.16924E-05	0.067987734	5.16305E-05
25 < HP <= 40	40	0.033340553	1.27942E-05	0.561825117	0.000215596	0.628260129	0.00024109	0.314578812	0.000120717	0.155738605	5.97635E-05
40 < HP <= 50	50	0.024167422	1.80229E-05	0.43067559	0.000321177	0.466646564	0.000348002	0.22720981	0.000169442	0.100803465	7.51743E-05
50 < HP <= 100	100	0.864195455	6.64389E-05	8.505771498	0.000653919	7.823002417	0.000601428	3.906092466	0.000300298	1.295411088	9.95905E-05
100 < HP <= 175	175	0.707003163	9.86928E-05	5.28937928	0.000738361	7.206394491	0.001005963	3.618798267	0.000505159	0.830148466	0.000115883
175 < HP <= 300	300	0.629584284	0.000140994	4.133726039	0.00092574	7.144379724	0.00159997	3.765447452	0.000843265	0.590798392	0.000132308
300 < HP <= 600	600	0.253829593	0.000222375	1.783192358	0.001562217	3.668890015	0.003214236	1.725759444	0.001511901	0.229475638	0.000201039
600 < HP <= 750	750	0.07847594	0.000332718	0.968782707	0.004107395	1.417956915	0.006011781	0.687077281	0.002913035	0.082397036	0.000349343
750 < HP <= 1000	1000	0.077196706	0.000379743	0.749499465	0.003686913	1.61007583	0.007920232	0.611793822	0.003009516	0.074206721	0.000365035
1000 < HP <= 1500	1500	0.024721985	0.000721412	0.246523093	0.007193787	0.57988044	0.016921483	0.218335856	0.006371255	0.023759599	0.000693329
1500 < HP <= 2000	2000	0.045794298	0.001182974	0.480117619	0.012402566	1.023382864	0.026436384	0.400059201	0.010334469	0.043172155	0.001115238
2000 < HP <= 3000	3000	0.009871462	0.001458299	0.101593707	0.015008312	0.232637766	0.034367287	0.092732932	0.013699321	0.009318299	0.001376581

TABLE 13

NONROAD EMISSION FACTORS - CONSTRUCTION EQUIPMENT - 2011
BRAYS BAYOU FEDERAL FLOOD CONTROL PROJECT
HARRIS COUNTY, TEXAS

Range	HP	THC exhaust		CO exhaust		NOx exhaust		SOx exhaust		PM exhaust	
		(tons/~~yr~~ day)	(tpd/day/unit)	(tons/~~yr~~ day)	(tpd/day/unit)	(tons/yr)	(tpd/day/unit)	(tons/yr)	(tpd/day/unit)	(tons/yr)	(tpd/day/unit)
3 < HP <= 6	6	0.001646842	5.0656E-06	0.027861644	8.57009E-05	0.011399758	3.5065E-05	0.004527325	1.39258E-05	0.009051241	2.78411E-05
6 < HP <= 11	11	0.003981371	7.32641E-06	0.07087799	0.000130428	0.029760044	5.47636E-05	0.011802799	2.17192E-05	0.016649381	3.06378E-05
11 < HP <= 16	16	0.003895928	7.48543E-06	0.036170913	6.94969E-05	0.051560882	9.90663E-05	0.026523018	5.09599E-05	0.022357812	4.29571E-05
16 < HP <= 25	25	0.018117917	1.34378E-05	0.148015242	0.000109781	0.194692004	0.0001444	0.096701812	7.17224E-05	0.069221015	5.13403E-05
25 < HP <= 40	40	0.029153359	1.09263E-05	0.563100378	0.000211042	0.636969297	0.000238728	0.321989936	0.000120678	0.157648265	5.90845E-05
40 < HP <= 50	50	0.021780862	1.5864E-05	0.433839423	0.000315986	0.47404052	0.000345266	0.232594107	0.000169409	0.102140296	7.43936E-05
50 < HP <= 100	100	0.785676184	5.89927E-05	8.699491358	0.000653204	7.505216326	0.000563531	3.999758851	0.000300323	1.29209746	9.70175E-05
100 < HP <= 175	175	0.659529888	8.99172E-05	5.417422929	0.000738586	6.797440253	0.000926731	3.706573935	0.000505337	0.841923362	0.000114784
175 < HP <= 300	300	0.602275169	0.000131731	4.237565371	0.000926847	6.810127624	0.001489522	3.856889171	0.000843585	0.592785191	0.000129655
300 < HP <= 600	600	0.251106147	0.000214855	1.805479641	0.001544828	3.519683503	0.003011557	1.768336731	0.001513047	0.231200166	0.000197822
600 < HP <= 750	750	0.078114155	0.000323455	0.989692435	0.004098122	1.348193042	0.005582602	0.703669119	0.002913755	0.082850182	0.000343066
750 < HP <= 1000	1000	0.076179966	0.000365996	0.757394118	0.003638798	1.563887033	0.007513485	0.626692304	0.003010859	0.073647183	0.000353828
1000 < HP <= 1500	1500	0.024232176	0.000690616	0.248871022	0.007092818	0.569828215	0.016240089	0.223518563	0.006370273	0.02355864	0.000671421
1500 < HP <= 2000	2000	0.044267096	0.001116836	0.485038366	0.012237268	1.003715912	0.025323236	0.409350537	0.010327703	0.04264405	0.001075887
2000 < HP <= 3000	3000	0.009717188	0.001402007	0.102933673	0.014851385	0.228335875	0.032944555	0.094919876	0.013695146	0.009266481	0.001336978

TABLE 14

NONROAD EMISSION FACTORS - CONSTRUCTION EQUIPMENT - 2012
BRAYS BAYOU FEDERAL FLOOD CONTROL PROJECT
HARRIS COUNTY, TEXAS

Range	HP	THC exhaust		CO exhaust		NOx exhaust		SOx exhaust		PM exhaust	
		(tons/yr)	(tpd/day/unit)	(tons/yr)	(tpd/day/unit)	(tons/yr)	(tpd/day/unit)	(tons/yr)	(tpd/day/unit)	(tons/yr)	(tpd/day/unit)
3 < HP <= 6	6	0.001667101	5.01472E-06	0.028439195	8.55464E-05	0.01157318	3.48127E-05	0.004619455	1.38955E-05	0.009226766	2.77545E-05
6 < HP <= 11	11	0.004035828	7.26269E-06	0.072361156	0.000130218	0.030217414	5.43778E-05	0.012042837	2.16717E-05	0.016969749	3.0538E-05
11 < HP <= 16	16	0.003954376	7.43001E-06	0.036834265	6.92092E-05	0.052518439	9.86787E-05	0.027050867	5.08268E-05	0.022788621	4.28183E-05
16 < HP <= 25	25	0.017139798	1.24317E-05	0.147533867	0.000107008	0.197216368	0.000143044	0.09864414	7.1548E-05	0.07027273	5.09698E-05
25 < HP <= 40	40	0.027918914	1.02327E-05	0.569897597	0.000208875	0.646813062	0.000237066	0.328327367	0.000120336	0.16001747	5.86485E-05
40 < HP <= 50	50	0.021103324	1.50313E-05	0.439822909	0.000313273	0.481800349	0.000343172	0.237176952	0.000168934	0.10371501	7.38731E-05
50 < HP <= 100	100	0.713744125	5.24087E-05	8.871470662	0.000651413	7.192485968	0.000528129	4.079304346	0.000299535	1.289905148	9.4715E-05
100 < HP <= 175	175	0.620303696	8.27025E-05	5.53072779	0.000737389	6.451559547	0.000860159	3.781021771	0.000504108	0.852519066	0.000113663
175 < HP <= 300	300	0.577276113	0.000123476	4.328051417	0.000925742	6.524153612	0.001395474	3.934175343	0.000841495	0.595253955	0.000127321
300 < HP <= 600	600	0.248805938	0.000208187	1.826819344	0.001528583	3.384769103	0.00283219	1.804405698	0.001509828	0.232961095	0.000194929
600 < HP <= 750	750	0.077909726	0.000315487	1.008041685	0.004081962	1.2907421	0.005226728	0.717737928	0.002906406	0.083332169	0.000337445
750 < HP <= 1000	1000	0.075605619	0.000355219	0.765324133	0.003595732	1.520998591	0.007146127	0.639347039	0.003003852	0.073300915	0.000344391
1000 < HP <= 1500	1500	0.024158897	0.000673329	0.251856159	0.007019447	0.563705949	0.015710967	0.22793044	0.006352616	0.023566378	0.000656815
1500 < HP <= 2000	2000	0.044077823	0.001087513	0.492012825	0.012139216	0.993956218	0.024523445	0.417327523	0.010296539	0.042730175	0.001054263
2000 < HP <= 3000	3000	0.009757423	0.001376735	0.104562617	0.014753389	0.226245767	0.03192242	0.096783293	0.013655756	0.009314879	0.001314294

BRAYS BAYOU ESTIMATED ANNUAL CONSTRUCTION SCHEDULE
BRIDGE CONSTRUCTION

The following calculations used information supplied by Glenn Laird on 9th July 2002, as detailed on the typical section.

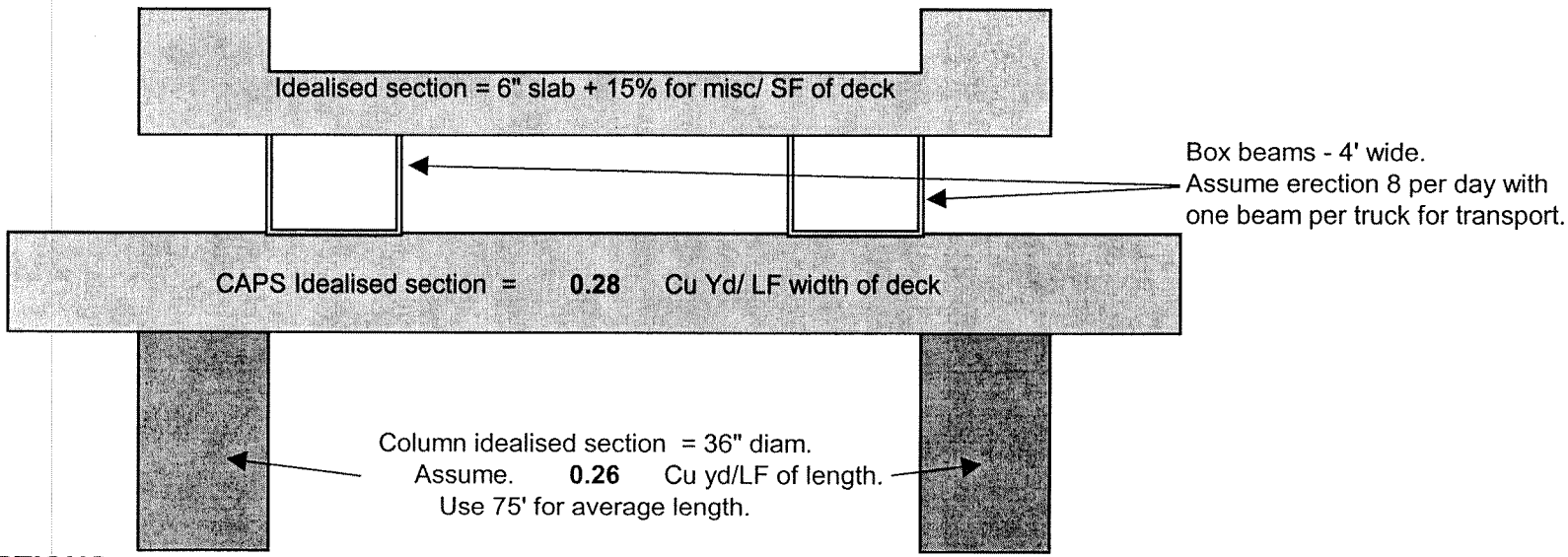

ASSUMPTIONS

QUANTITY CALCULATION

DECK =	Square area* 6" + 15% for misc. works.
COLUMN =	**0.26** Cu Yd per LF of length (Assuming 75' LF Length)
ABUTMENT =	**0.37** Cu Yd per LF of width
ABUTMENT PILES =	**0.2** Cu Yd per LF of length (Assume 7 no. for 40' per abutment)
WING WALLS =	**7.5** Cu Yd per abutment
BENT CAPS =	**0.28** Cu Yd per LF of width

CONSTRUCTION CALCULATION

8 Cu Yds per Cement Truck running 1 trip per hour for an 8 hr day
1 No. box beam per truck
1 No. I beams per truck. (Conservative)
8 No. Beams set per day, 1 crane required for each day.
TBD Year construction period
15 Days per month Construction
180 Days construction assumed per Annum (Based on 15 days worked per month).
1440 Hrs construction per Annum (Based on 8Hr Days).

SELECTION OF TYPICAL STRUCTURE

Replacement Bridge

Selection of typical structure is based on an approximate average deck square area of 20,000SF.
From Spreadsheet A, structures chosen as representative a) Braeswood Bridge, b) Calhoun Bridge, c) Chimney Rock Bridge (NB & SB)

STRUCTURE DETAILS

Structure Name	No. of Bents	No. of Columns per bent	Length of Column LF	Width of Deck LF	Square area of Deck SF	15% of Deck Area SF	No. of Abutments	No. of Abutment Piles	Depth of Pile LF	No. of Spans	No. of Beams per span
Braeswood Bridge	6	2	75	33	20611	3092	2	7	40	7	2
Calhoun Bridge	4	2	75	58	20966	3145	2	7	40	5	2
Chimney Rock (NB & SB)	6	2	75	47.5	23655	3548	4	7	40	8	2

CALCULATED QUANTITIES

Structure Name	Cu Yd Concrete for Columns	Cu Yd Concrete for CAPS	Cu yd Concrete for Deck	Cu Yd Concrete for Abutments	Cu Yd Concrete for Abutment Pile	Cu Yd Concrete for Wing Walls	**TOTAL CONCRETE Cu Yd**	**No. OF BEAMS**	Start Date	Completion Date	Construction Period Calendar Days	**Construction Period Years (CP)**
Braeswood Bridge	234	55	439	24	112	15	**879**	**14**	Sep-10	Feb-12	502	**1.4**
Calhoun Bridge	156	65	446	43	112	15	**837**	**10**	Aug-03	Dec-04	502	**1.4**
Chimney Rock (NB & SB)	234	80	504	70	224	30	**1142**	**16**	Jun-07	Nov-08	502	**1.4**

CONSTRUCTION QUANTITIES FOR A 12 YEAR PERIOD PER CONSTRUCTION PERIOD

Structure Name	Concrete placed per CP Cu Yd	No. of Cement Truck Hours per CP	Beams installed per CP	No. Of Transport Truck Hours per CP	No. of Crane Hours per CP	25% of Cement Truck time for Excavator	Construction Period Years (CP)
Braeswood Bridge	879	110	14	14	14	27	1.4
Calhoun Bridge	837	105	10	10	10	26	1.4
Chimney Rock (NB & SB)	1142	143	16	16	16	36	1.4
AVERAGE	**953**	**119**	**13**	**13**	**13**	**30**	**1.4**

NOTE:
The representative construction quantities used for calculating emission rates, have been based on an average of 3 structures. The 3 were selected to provide a conservative representative average.

The calculations have been taken over the proposed construction period for the individual structure (in years), calculated above.

ANNUAL CONSTRUCTION RATES

Note all rates have been based on interpolated figures calculated on representative structures, over the given construction period.
The following schedule details construction hours (both for demolition and new build) for each of the replacement structures.

From Spreadsheet A there are 24 structures designated as "Replace". (There are several errors on the list, therefore drgs and supporting info used to verify).
Overall Construction Period (OCP) for "Replace" structures runs from 16th April 2003 (earliest start date) to 13th Feb 2012 (Latest completion date).

VEHICLE TYPE	WORK	No. of Vehicles	HRS per CP	No. of "Replace" Structures	Total No. of HRS per OCP	Earliest Start	Latest Finish	Overall Construction Period (OCP) in Years	**TOTAL No. of HRS per YEAR**
Demolition of Existing (Assumed):									
Excavator	Demolition/Loading	1	119	24	2858	16-Apr-03	13-Feb-12	9	**323**
Dozer	Loading	1	119	24	2858	16-Apr-03	13-Feb-12	9	**323**
Dump Truck	Removal of material	1	119	24	2858	16-Apr-03	13-Feb-12	9	**323**
Transport Truck	Removal of ex. Beams	1	13	24	320	16-Apr-03	13-Feb-12	9	**36**
Crane	Removal of ex. Beams	1	13	24	320	16-Apr-03	13-Feb-12	9	**36**
Construction (Calculated above)									
Crane	Beam Erection	1	13	24	320	16-Apr-03	13-Feb-12	9	**36**
Excavator	Formwork etc.	1	30	24	715	16-Apr-03	13-Feb-12	9	**81**
Concrete Pump	Construction	1	119	24	2858	16-Apr-03	13-Feb-12	9	**323**
Cement Truck	Delivery	1	119	24	2858	16-Apr-03	13-Feb-12	9	**323**
Transport Truck	Beam Delivery	1	13	24	320	16-Apr-03	13-Feb-12	9	**36**

NOTE:
A review of the structures to be demolished and replaced show that the span and construction form are relatively similar. Therefore to determine a conservative estimate for demolition quantities, similar quantities required for the new structure have been used.

SELECTION OF TYPICAL STRUCTURE

Lengthen Bridge

Selection of typical structure is based on an approximate average deck square area of 11,000SF.
From Spreadsheet A, structures chosen as representative a) Loop 610 DS Bridge b) Loop 610 U/S Bridge

STRUCTURE DETAILS

Structure Name	No. of Bents	No. of Columns per bent	Length of Column LF	Width of Deck LF	Square are of Deck SF	15% of Deck Area SF	No. of Abutments	No. of Abutment Piles	Depth of Pile LF	No. of Spans	No. of Beams per span
Loop 610 D/S	1	2	75	42.5	2120	318	1	7	40	1	2
Loop 610 U/S	1	2	75	58	2035	305	1	7	40	1	2

CALCULATED QUANTITIES

Structure Name	Cu Yd Concrete for Columns	Cu Yd Concrete for CAPS	Cu yd Concrete for Deck	Cu Yd Concrete for Abutments	Cu Yd Concrete for Abutment Pile	Cu Yd Concrete for Wing Walls	**TOTAL CONCRETE Cu Yd**	**No. OF BEAMS**	Start Date	Completion Date	Construction Period Calendar Days	**Construction Period Years (CP)**
Loop 610 D/S	39	12	45	16	56	7.5	**175.5**	**2**	Jul-04	Nov-05	500	**1.4**
Loop 610 U/S	39	16	43	21	56	7.5	**182.5**	**2**	Nov-05	Apr-07	502	**1.4**

CONSTRUCTION QUANTITIES FOR A 12 YEAR PERIOD PER CONSTRUCTION PERIOD

Structure Name	Concrete placed per CP Cu Yd	No. of Cement Truck Hours per CP	Beams installed per CP	No. Of Transport Truck Hours per CP	No. of Crane Hours per CP	25% of Cement Truck time for Excavator	Construction Period Years (CP)
Braeswood Bridge	176	22	2.0	2.0	2.0	5	1.4
Calhoun Bridge	183	23	2.0	2.0	2.0	6	1.4
AVERAGE	**179**	**22**	**2**	**2**	**2**	**6**	**1**

NOTE:
The representative construction quantities used for calculating emission rates, have been based on an average of 2 structures. The 2 were selected to provide a conservative representative average.

The calculations have been taken over the proposed construction period for the individual structure (in years) calculated above.

ANNUAL CONSTRUCTION RATES

Note all rates have been based on interpolated figures calculated on representative structures, over the given construction period.
The following schedule details construction hours (both for demolition and new build) for each of the replacement structures.

From Spreadsheet A there are 4 structures designated as "Lengthen". POSSIBLE ERROR WITH SOUTH 75TH.
Overall Construction Period (OCP) for "Lengthen" structures runs from 14th Jan 04 (earliest start date) to 11th April 07 (Latest completion date).

VEHICLE TYPE	WORK	No. of Vehicles	HRS per CP	No. of "Replace" Structures	Total No. of HRS per CP	Earliest Start	Latest Finish	Overall Construction Period (OCP) in Years	**TOTAL No. of HRS per YEAR**
Demolition of Existing (Assumed):									
Excavator	Demolition/Loading	1	11	4	45	14-Jan-04	11-Apr-07	3	**14**
Dozer	Loading	1	11	4	45	14-Jan-04	11-Apr-07	3	**14**
Dump Truck	Removal of material	1	11	4	45	14-Jan-04	11-Apr-07	3	**14**
Transport Truck	Removal of ex. Beams	1	1	4	4	14-Jan-04	11-Apr-07	3	**1**
Crane	Removal of ex. Beams	1	1	4	4	14-Jan-04	11-Apr-07	3	**1**
Construction (Calculated above)									
Crane	Beam Erection	1	2	4	8	14-Jan-04	11-Apr-07	3	**2**
Excavator	Formwork etc,	1	2	4	8	14-Jan-04	11-Apr-07	3	**2**
Concrete Pump	Construction	1	22	4	90	14-Jan-04	11-Apr-07	3	**28**
Cement Truck	Delivery	1	22	4	90	14-Jan-04	11-Apr-07	3	**28**
Transport Truck	Beam Delivery	1	2	4	8	14-Jan-04	11-Apr-07	3	**2**

NOTE:
To determine a conservative estimate for demolition quantities for the abutments, 50% of the construction time for the extended section has been used.

PBS&J

SUMMARY SCHEDULE

VEHICLE TYPE	WORK	Earliest Start	Latest Finish	Overall Construction Period (OCP) in Years	TOTAL No. of HRS per YEAR
REPLACEMENT STRUCTURE					
Demolition of Existing (Assumed):					
Excavator	Demolition/Loading				323
Dozer	Loading				323
Dump Truck	Removal of material	16-Apr-03	13-Feb-12	9	323
Transport Truck	Removal of ex. Beams				36
Crane	Removal of ex. Beams				36
Construction (Calculated above)					
Crane	Beam Erection				36
Excavator	Formwork etc,				81
Concrete Pump	Construction	16-Apr-03	13-Feb-12	9	323
Cement Truck	Delivery				323
Transport Truck	Beam Delivery				36
LENGTHEN STRUCTURE					
Demolition of Existing (Assumed):					
Excavator	Demolition/Loading				14
Dozer	Loading				14
Dump Truck	Removal of material	14-Jan-04	11-Apr-07	3	14
Transport Truck	Removal of ex. Beams				1
Crane	Removal of ex. Beams				1
Construction (Calculated above)					
Crane	Beam Erection				2
Excavator	Formwork etc,				2
Concrete Pump	Construction	14-Jan-04	11-Apr-07	3	28
Cement Truck	Delivery				28
Transport Truck	Beam Delivery				2

VEHICLE HOUR SUMMARY

VEHICLE TYPE	MAXIMUM TOTAL No. of HRS per YEAR
Excavator	421
Dozer	337
Dump Truck	337
Transport Truck	76
Cement Truck	351
Crane	76
Concrete Pump	351

NOTES
1. Quantity calculations are based on information provided by Glenn Laird on 9th July 2002, as detailed on the typical section spreadsheet.
2. Vehicle capacities and rate of work are based on information provided by Glenn Laird on 9th July 2002, as detailed on the typical section spreadsheet.
3. Vehicle types and numbers presented are based on information provided by Glenn Laird and construction presumptions.
4. Calculation of the proposed number of bridges, those lengthened and replaced, square deck areas, spans etc. are based on information provided by Glenn Laird and included on Spreadsheet A. Several non. conformities have been found with this spreadsheet.

PBS&J

BRAYS BAYOU ESTIMATED ANNUAL CONSTRUCTION SCHEDULE - 2004

Total Excavation Quantity =	163,000	cu yds	Channel Exacation
Estimated excavation per day =	2,500	cu yds	

Assumed construction period =	1	yrs	at	15	days per month.
Assumed construction day =	8	hrs			

METHOD OF CALCULATING CONSTRUCTION HOURS

A **Based on estimated excavation quantity of 2,656,000 cu yds over an 6 year period.**

Total excavation required per day = 2,500.00 cu yds/day

Based on this calculation, the total number of backhoes required for excavation would be 1.

Calculation for transport of dirt.

Type	Cu yds per load	Load per Hour	Hrs per Day	Total no. of trucks required to move 2,500 cu yds per day
Dump truck	8	1	8	39

Plant used

Type	No.	Capacity	Units	Remarks
Backhoe	1	2500	cu yds / day	Assuming 1 excavating channel and ditches.
Dozer	1	N/A		One working with each excavating backhoe
Tractor	0	N/A		misc.
Dump Truck	39	8	cu yds per load	Transporting excavated material off site
		1	load per hr	

NOTE: This method assumes excavation on one side of channel only.

CONSTRUCTION HOURS

Type	No.	Hrs per day	Total days per Annum	Total Hrs
Backhoe	1	8	65	522
Dozer	1	8	65	522
Tractor	0	0	0	0
Dump Truck	39	8	65	20375

PBS&J

BRAYS BAYOU ESTIMATED ANNUAL CONSTRUCTION SCHEDULE - 2006

Total Excavation Quantity =	555,000	cu yds	Channel Exacation		
Estimated excavation per day =	2,500	cu yds			
Assumed construction period =	1	yrs	at	15	days per month.
Assumed construction day =	8	hrs			

METHOD OF CALCULATING CONSTRUCTION HOURS

A **Based on estimated excavation quantity of 2,656,000 cu yds over an 6 year period.**

Total excavation required per day = 2,500.00 cu yds/day

Based on this calculation, the total number of backhoes required for excavation would be 1.

Calculation for transport of dirt.

Type	Cu yds per load	Load per Hour	Hrs per Day	Total no. of trucks required to move 2,500 cu yds per day
Dump truck	8	1	8	39

Plant used

Type	No.	Capacity	Units	Remarks
Backhoe	1	2500	cu yds / day	Assuming 1 excavating channel and ditches.
Dozer	1	N/A		One working with each excavating backhoe
Tractor	0	N/A		misc.
Dump Truck	39	8	cu yds per load	Transporting excavated material off site
		1	load per hr	

NOTE: This method assumes excavation on one side of channel only.

CONSTRUCTION HOURS

Type	No.	Hrs per day	Total days per Annum	Total Hrs
Backhoe	1	8	222	1776
Dozer	1	8	222	1776
Tractor	0	0	0	0
Dump Truck	39	8	222	69375

PBS&J

BRAYS BAYOU ESTIMATED ANNUAL CONSTRUCTION SCHEDULE - 2008

Total Excavation Quantity =	218,000	cu yds	Channel Exacation		
Estimated excavation per day =	2,500	cu yds			
Assumed construction period =	1	yrs	at	15	days per month.
Assumed construction day =	8	hrs			

METHOD OF CALCULATING CONSTRUCTION HOURS

A **Based on estimated excavation quantity of 2,656,000 cu yds over an 6 year period.**

Total excavation required per day = 2,500.00 cu yds/day

Based on this calculation, the total number of backhoes required for excavation would be 1.

Calculation for transport of dirt.

Type	Cu yds per load	Load per Hour	Hrs per Day	Total no. of trucks required to move 2,500 cu yds per day
Dump truck	8	1	8	39

Plant used

Type	No.	Capacity	Units	Remarks
Backhoe	1	2500	cu yds / day	Assuming 1 excavating channel and ditches.
Dozer	1	N/A		One working with each excavating backhoe
Tractor	0	N/A		misc.
Dump Truck	39	8	cu yds per load	Transporting excavated material off site
		1	load per hr	

NOTE: This method assumes excavation on one side of channel only.

CONSTRUCTION HOURS

Type	No.	Hrs per day	Total days per Annum	Total Hrs
Backhoe	1	8	87	698
Dozer	1	8	87	698
Tractor	0	0	0	0
Dump Truck	39	8	87	27250

PBS&J

BRAYS BAYOU ESTIMATED ANNUAL CONSTRUCTION SCHEDULE - 2010

Total Excavation Quantity =	950,000	cu yds	Channel Exacation
Estimated excavation per day =	2,500	cu yds	

Assumed construction period =	1	yrs	at	15	days per month.
Assumed construction day =	8	hrs			

METHOD OF CALCULATING CONSTRUCTION HOURS

A **Based on estimated excavation quantity of 2,656,000 cu yds over an 6 year period.**

Total excavation required per day = 2,500.00 cu yds/day

Based on this calculation, the total number of backhoes required for excavation would be 1.

Calculation for transport of dirt.

Type	Cu yds per load	Load per Hour	Hrs per Day	Total no. of trucks required to move 2,500 cu yds per day
Dump truck	8	1	8	39

Plant used

Type	No.	Capacity	Units	Remarks
Backhoe	1	2500	cu yds / day	Assuming 1 excavating channel and ditches.
Dozer	1	N/A		One working with each excavating backhoe
Tractor	0	N/A		misc.
Dump Truck	39	8	cu yds per load	Transporting excavated material off site
		1	load per hr	

NOTE: This method assumes excavation on one side of channel only.

CONSTRUCTION HOURS

Type	No.	Hrs per day	Total days per Annum	Total Hrs
Backhoe	1	8	380	3040
Dozer	1	8	380	3040
Tractor	0	0	0	0
Dump Truck	39	8	380	118750

PBS&J

BRAYS BAYOU ESTIMATED ANNUAL CONSTRUCTION SCHEDULE - 2011

Total Excavation Quantity =	420,000	cu yds	Channel Exacation
Estimated excavation per day =	2,500	cu yds	

Assumed construction period =	1	yrs	at	15	days per month.
Assumed construction day =	8	hrs			

METHOD OF CALCULATING CONSTRUCTION HOURS

A **Based on estimated excavation quantity of 2,656,000 cu yds over an 6 year period.**

Total excavation required per day = 2,500.00 cu yds/day

Based on this calculation, the total number of backhoes required for excavation would be 1.

Calculation for transport of dirt.

Type	Cu yds per load	Load per Hour	Hrs per Day	Total no. of trucks required to move 2,500 cu yds per day
Dump truck	8	1	8	39

Plant used

Type	No.	Capacity	Units	Remarks
Backhoe	1	2500	cu yds / day	Assuming 1 excavating channel and ditches.
Dozer	1	N/A		One working with each excavating backhoe
Tractor	0	N/A		misc.
Dump Truck	39	8	cu yds per load	Transporting excavated material off site
		1	load per hr	

NOTE: This method assumes excavation on one side of channel only.

CONSTRUCTION HOURS

Type	No.	Hrs per day	Total days per Annum	Total Hrs
Backhoe	1	8	168	1344
Dozer	1	8	168	1344
Tractor	0	8	0	0
Dump Truck	39	8	168	52500

PBS&J

BRAYS BAYOU ESTIMATED ANNUAL CONSTRUCTION SCHEDULE - 2012

Total Excavation Quantity =	350,000	cu yds	Channel Exacation
Estimated excavation per day =	2,500	cu yds	

Assumed construction period =	1	yrs	at	15	days per month.
Assumed construction day =	8	hrs			

METHOD OF CALCULATING CONSTRUCTION HOURS

A **Based on estimated excavation quantity of 2,656,000 cu yds over an 6 year period.**

Total excavation required per day = 2,500.00 cu yds/day

Based on this calculation, the total number of backhoes required for excavation would be 1.

Calculation for transport of dirt.

Type	Cu yds per load	Load per Hour	Hrs per Day	Total no. of trucks required to move 2,500 cu yds per day
Dump truck	8	1	8	39

Plant used

Type	No.	Capacity	Units	Remarks
Backhoe	1	2500	cu yds / day	Assuming 1 excavating channel and ditches.
Dozer	1	N/A		One working with each excavating backhoe
Tractor	0	N/A		misc.
Dump Truck	39	8	cu yds per load	Transporting excavated material off site
		1	load per hr	

NOTE: This method assumes excavation on one side of channel only.

CONSTRUCTION HOURS

Type	No.	Hrs per day	Total days per Annum	Total Hrs
Backhoe	1	8	140	1120
Dozer	1	8	140	1120
Tractor	0	8	0	0
Dump Truck	39	8	140	43750

PBS&J

WILLOW WATERHOLE ESTIMATED ANNUAL CONSTRUCTION SCHEDULE - 2003

Total Excavation Quantity =	535,000	cu yds	Willow Waterhole		
Estimated excavation per day =	7,500	cu yds			
Assumed construction period =	1	yrs	at	15	days per month.
Assumed construction day =	8	hrs			

METHOD OF CALCULATING CONSTRUCTION HOURS

A **Based on 10 yr Period at 7500 cu yds per day**
Total excavation in 10 years = **5,600,000** cu yds

This calculation will use 3 backhoe excavators (max capacity 7500 cu yd/day)

Calculation for transport of dirt.

Type	Cu yds per load	Load per Hour	Hrs per Day	Total no. of trucks required to move 7,500 cu yds per day
Dump truck	8	1	8	117

PLANT USED

Type	No.	Capacity	Units	Remarks
Backhoe	3	2500	cu yds / day	Assuming 2 excavating in tandem with a 3rd for ditch excavation
Dozer	2	N/A		One working with each excavating backhoe
Tractor	1	N/A		Misc. work
Dump Truck	117	8	cu yds per load	Transporting excavated material off site
		1	Load per hr	

CONSTRUCTION HOURS

Type	No.	Hrs per day	Total days per Annum	Total Hrs Per Annum
Backhoe	3	8	71	1712
Dozer	2	8	71	1141
Tractor	1	8	71	571
Dump Truck	117	8	71	66875

PBS&J

WILLOW WATERHOLE ESTIMATED ANNUAL CONSTRUCTION SCHEDULE - 2004

Total Excavation Quantity =	700,000	cu yds	Willow Waterhole		
Estimated excavation per day =	7,500	cu yds			
Assumed construction period =	1	yrs	at	15	days per month.
Assumed construction day =	8	hrs			

METHOD OF CALCULATING CONSTRUCTION HOURS

A **Based on 10 yr Period at 7500 cu yds per day**
Total excavation in 10 years = **5,600,000** cu yds

This calculation will use 3 backhoe excavators (max capacity 7500 cu yd/day)

Calculation for transport of dirt.

Type	Cu yds per load	Load per Hour	Hrs per Day	Total no. of trucks required to move 7,500 cu yds per day
Dump truck	8	1	8	117

PLANT USED

Type	No.	Capacity	Units	Remarks
Backhoe	3	2500	cu yds / day	Assuming 2 excavating in tandem with a 3rd for ditch excavation
Dozer	2	N/A		One working with each excavating backhoe
Tractor	1	N/A		Misc. work
Dump Truck	117	8	cu yds per load	Transporting excavated material off site
		1	Load per hr	

CONSTRUCTION HOURS

Type	No.	Hrs per day	Total days per Annum	Total Hrs Per Annum
Backhoe	3	8	93	2240
Dozer	2	8	93	1493
Tractor	1	8	93	747
Dump Truck	117	8	93	87500

PBS&J

WILLOW WATERHOLE ESTIMATED ANNUAL CONSTRUCTION SCHEDULE - 2005

Total Excavation Quantity =	**546,000**	cu yds	Willow Waterhole		
Estimated excavation per day =	**7,500**	cu yds			
Assumed construction period =	**1**	yrs	at	**15**	days per month.
Assumed construction day =	**8**	hrs			

METHOD OF CALCULATING CONSTRUCTION HOURS

A **Based on 10 yr Period at 7500 cu yds per day**
Total excavation in 10 years = **5,600,000** cu yds

This calculation will use 3 backhoe excavators (max capacity 7500 cu yd/day)

Calculation for transport of dirt.

Type	Cu yds per load	Load per Hour	Hrs per Day	Total no. of trucks required to move 7,500 cu yds per day
Dump truck	8	1	8	117

PLANT USED

Type	No.	Capacity	Units	Remarks
Backhoe	3	2500	cu yds / day	Assuming 2 excavating in tandem with a 3rd for ditch excavation
Dozer	2	N/A		One working with each excavating backhoe
Tractor	1	N/A		Misc. work
Dump Truck	117	8	cu yds per load	Transporting excavated material off site
		1	Load per hr	

CONSTRUCTION HOURS

Type	No.	Hrs per day	Total days per Annum	Total Hrs Per Annum
Backhoe	3	8	73	1747
Dozer	2	8	73	1165
Tractor	1	8	73	582
Dump Truck	117	8	73	68250

PBS&J

WILLOW WATERHOLE ESTIMATED ANNUAL CONSTRUCTION SCHEDULE - 2006

Total Excavation Quantity =	700,000	cu yds	Willow Waterhole		
Estimated excavation per day =	7,500	cu yds			
Assumed construction period =	1	yrs	at	15	days per month.
Assumed construction day =	8	hrs			

METHOD OF CALCULATING CONSTRUCTION HOURS

A **Based on 10 yr Period at 7500 cu yds per day**
Total excavation in 10 years = **5,600,000** cu yds

This calculation will use 3 backhoe excavators (max capacity 7500 cu yd/day)

Calculation for transport of dirt.

Type	Cu yds per load	Load per Hour	Hrs per Day	Total no. of trucks required to move 7,500 cu yds per day
Dump truck	8	1	8	117

PLANT USED

Type	No.	Capacity	Units	Remarks
Backhoe	3	2500	cu yds / day	Assuming 2 excavating in tandem with a 3rd for ditch excavation
Dozer	2	N/A		One working with each excavating backhoe
Tractor	1	N/A		Misc. work
Dump Truck	117	8	cu yds per load	Transporting excavated material off site
		1	Load per hr	

CONSTRUCTION HOURS

Type	No.	Hrs per day	Total days per Annum	Total Hrs Per Annum
Backhoe	3	8	93	2240
Dozer	2	8	93	1493
Tractor	1	8	93	747
Dump Truck	117	8	93	87500

PBS&J

WILLOW WATERHOLE ESTIMATED ANNUAL CONSTRUCTION SCHEDULE - 2007

Total Excavation Quantity =	649,000	cu yds		Willow Waterhole	
Estimated excavation per day =	7,500	cu yds			
Assumed construction period =	1	yrs	at	15	days per month.
Assumed construction day =	8	hrs			

METHOD OF CALCULATING CONSTRUCTION HOURS

A **Based on 10 yr Period at 7500 cu yds per day**
Total excavation in 10 years = **5,600,000** cu yds

This calculation will use 3 backhoe excavators (max capacity 7500 cu yd/day)

Calculation for transport of dirt.

Type	Cu yds per load	Load per Hour	Hrs per Day	Total no. of trucks required to move 7,500 cu yds per day
Dump truck	8	1	8	117

PLANT USED

Type	No.	Capacity	Units	Remarks
Backhoe	3	2500	cu yds / day	Assuming 2 excavating in tandem with a 3rd for ditch excavation
Dozer	2	N/A		One working with each excavating backhoe
Tractor	1	N/A		Misc. work
Dump Truck	117	8	cu yds per load	Transporting excavated material off site
		1	Load per hr	

CONSTRUCTION HOURS

Type	No.	Hrs per day	Total days per Annum	Total Hrs Per Annum
Backhoe	3	8	87	2077
Dozer	2	8	87	1385
Tractor	1	8	87	692
Dump Truck	117	8	87	81125

WILLOW WATERHOLE ESTIMATED ANNUAL CONSTRUCTION SCHEDULE - 2008

Total Excavation Quantity =	700,000	cu yds	Willow Waterhole		
Estimated excavation per day =	7,500	cu yds			
Assumed construction period =	1	yrs	at	15	days per month.
Assumed construction day =	8	hrs			

METHOD OF CALCULATING CONSTRUCTION HOURS

A **Based on 10 yr Period at 7500 cu yds per day**
Total excavation in 10 years = **5,600,000** cu yds

This calculation will use 3 backhoe excavators (max capacity 7500 cu yd/day)

Calculation for transport of dirt.

Type	Cu yds per load	Load per Hour	Hrs per Day	Total no. of trucks required to move 7,500 cu yds per day
Dump truck	8	1	8	117

PLANT USED

Type	No.	Capacity	Units	Remarks
Backhoe	3	2500	cu yds / day	Assuming 2 excavating in tandem with a 3rd for ditch excavation
Dozer	2	N/A		One working with each excavating backhoe
Tractor	1	N/A		Misc. work
Dump Truck	117	8	cu yds per load	Transporting excavated material off site
		1	Load per hr	

CONSTRUCTION HOURS

Type	No.	Hrs per day	Total days per Annum	Total Hrs Per Annum
Backhoe	3	8	93	2240
Dozer	2	8	93	1493
Tractor	1	8	93	747
Dump Truck	117	8	93	87500

PBS&J

WILLOW WATERHOLE ESTIMATED ANNUAL CONSTRUCTION SCHEDULE - 2009

Total Excavation Quantity =	700,000	cu yds	Willow Waterhole		
Estimated excavation per day =	7,500	cu yds			
Assumed construction period =	1	yrs	at	15	days per month.
Assumed construction day =	8	hrs			

METHOD OF CALCULATING CONSTRUCTION HOURS

A **Based on 10 yr Period at 7500 cu yds per day**
Total excavation in 10 years = **5,600,000** cu yds

This calculation will use 3 backhoe excavators (max capacity 7500 cu yd/day)

Calculation for transport of dirt.

Type	Cu yds per load	Load per Hour	Hrs per Day	Total no. of trucks required to move 7,500 cu yds per day
Dump truck	8	1	8	117

PLANT USED

Type	No.	Capacity	Units	Remarks
Backhoe	3	2500	cu yds / day	Assuming 2 excavating in tandem with a 3rd for ditch excavation
Dozer	2	N/A		One working with each excavating backhoe
Tractor	1	N/A		Misc. work
Dump Truck	117	8	cu yds per load	Transporting excavated material off site
		1	Load per hr	

CONSTRUCTION HOURS

Type	No.	Hrs per day	Total days per Annum	Total Hrs Per Annum
Backhoe	3	8	93	2240
Dozer	2	8	93	1493
Tractor	1	8	93	747
Dump Truck	117	8	93	87500

PBS&J

WILLOW WATERHOLE ESTIMATED ANNUAL CONSTRUCTION SCHEDULE - 2010

Total Excavation Quantity =	561,000	cu yds	Willow Waterhole		
Estimated excavation per day =	7,500	cu yds			
Assumed construction period =	1	yrs	at	15	days per month.
Assumed construction day =	8	hrs			

METHOD OF CALCULATING CONSTRUCTION HOURS

A **Based on 10 yr Period at 7500 cu yds per day**
Total excavation in 10 years = **5,600,000** cu yds

This calculation will use 3 backhoe excavators (max capacity 7500 cu yd/day)

Calculation for transport of dirt.

Type	Cu yds per load	Load per Hour	Hrs per Day	Total no. of trucks required to move 7,500 cu yds per day
Dump truck	8	1	8	117

PLANT USED

Type	No.	Capacity	Units	Remarks
Backhoe	3	2500	cu yds / day	Assuming 2 excavating in tandem with a 3rd for ditch excavation
Dozer	2	N/A		One working with each excavating backhoe
Tractor	1	N/A		Misc. work
Dump Truck	117	8	cu yds per load	Transporting excavated material off site
		1	Load per hr	

CONSTRUCTION HOURS

Type	No.	Hrs per day	Total days per Annum	Total Hrs Per Annum
Backhoe	3	8	75	1795
Dozer	2	8	75	1197
Tractor	1	8	75	598
Dump Truck	117	8	75	70125

PBS&J

WILLOW WATERHOLE ESTIMATED ANNUAL CONSTRUCTION SCHEDULE - 2011

Total Excavation Quantity =	225,000	cu yds		Willow Waterhole	
Estimated excavation per day =	7,500	cu yds			
Assumed construction period =	1	yrs	at	15	days per month.
Assumed construction day =	8	hrs			

METHOD OF CALCULATING CONSTRUCTION HOURS

A **Based on 10 yr Period at 7500 cu yds per day**
Total excavation in 10 years = **5,600,000** cu yds

This calculation will use 3 backhoe excavators (max capacity 7500 cu yd/day)

Calculation for transport of dirt.

Type	Cu yds per load	Load per Hour	Hrs per Day	Total no. of trucks required to move 7,500 cu yds per day
Dump truck	8	1	8	117

PLANT USED

Type	No.	Capacity	Units	Remarks
Backhoe	3	2500	cu yds / day	Assuming 2 excavating in tandem with a 3rd for ditch excavation
Dozer	2	N/A		One working with each excavating backhoe
Tractor	1	N/A		Misc. work
Dump Truck	117	8	cu yds per load	Transporting excavated material off site
		1	Load per hr	

CONSTRUCTION HOURS

Type	No.	Hrs per day	Total days per Annum	Total Hrs Per Annum
Backhoe	3	8	30	720
Dozer	2	8	30	480
Tractor	1	8	30	240
Dump Truck	117	8	30	28125

PBS&J

WILLOW WATERHOLE ESTIMATED ANNUAL CONSTRUCTION SCHEDULE - 2012

Total Excavation Quantity =	**284,000**	cu yds	Willow Waterhole		
Estimated excavation per day =	**7,500**	cu yds			
Assumed construction period =	**1**	yrs	at	**15**	days per month.
Assumed construction day =	**8**	hrs			

METHOD OF CALCULATING CONSTRUCTION HOURS

A **Based on 10 yr Period at 7500 cu yds per day**
Total excavation in 10 years = **5,600,000** cu yds

This calculation will use 3 backhoe excavators (max capacity 7500 cu yd/day)

Calculation for transport of dirt.

Type	Cu yds per load	Load per Hour	Hrs per Day	Total no. of trucks required to move 7,500 cu yds per day
Dump truck	8	1	8	117

PLANT USED

Type	No.	Capacity	Units	Remarks
Backhoe	3	2500	cu yds / day	Assuming 2 excavating in tandem with a 3rd for ditch excavation
Dozer	2	N/A		One working with each excavating backhoe
Tractor	1	N/A		Misc. work
Dump Truck	117	8	cu yds per load	Transporting excavated material off site
		1	Load per hr	

CONSTRUCTION HOURS

Type	No.	Hrs per day	Total days per Annum	Total Hrs Per Annum
Backhoe	3	8	38	909
Dozer	2	8	38	606
Tractor	1	8	38	303
Dump Truck	117	8	38	35500

APPENDIX B

LETTER FROM
TEXAS NATURAL RESOURCE CONSERVATION COMMISSION
DISCUSSING SIP CONSTRUCTION EMISSIONS SUMMARY

Robert J. Huston, *Chairman*
R. B. "Ralph" Marquez, *Commissioner*
Kathleen Hartnett White, *Commissioner*
Jeffrey A. Saitas, *Executive Director*

TEXAS NATURAL RESOURCE CONSERVATION COMMISSION

Protecting Texas by Reducing and Preventing Pollution

December 21, 2001

Colonel Leonard D. Waterworth
Commander and District Engineer
U.S. Army Corps of Engineers
Galveston District
P.O. Box 1229
Galveston, TX 77553-1229

Re: Shoal Point Container Terminal – General Conformity/State Implementation Plan (SIP) Construction Emissions Inventory

Dear Colonel Waterworth:

This letter is in response to a request for emissions inventory information to assist in the analysis of the air quality impacts from the proposed construction of the Shoal Point Container Terminal in Texas City. If, as expected, construction activity at the Shoal Point Container Terminal project generates emissions above the de minimis level of 25 tons per year of nitrogen oxides (NO_x) which is applicable in the Houston area, then a general conformity determination for the project must be performed by the Army Corps of Engineers, as required by the federal Clean Air Act Amendments of 1990.

The construction inventory is a subcategory of the broader category of "area and non road sources" contained in the applicable SIP. Estimates of construction emissions are based on a number of assumptions about population growth, economic activity, the phase in of Tier I and Tier II engines, and cleaner fuels, to name a few, rather than empirically based with the benefit of perfect knowledge about all the possible contributors of nitrogen oxides in the Houston area.

The 2000 SIP for the Houston/Galveston nonattainment, approved in October 2001, includes a construction inventory of 5.5 tons per day or 1,512.2 tons per year for volatile organic compound and 32.1 tons per day or 8,827.5 tons per year for NO_x. This inventory is based in part on the assumption that the most technologically advanced equipment (that is to say the cleanest) available would be in wide spread use. Therefore, any analysis must at least demonstrate it is consistent with this assumption.

Please let Bruce Uphaus of my staff know if you need anything further from us on this matter. He can be reached at (512) 239-4528.

Sincerely,

Jeffrey A. Saitas, P.E., Executive Director
Texas Natural Resource Conservation Commission

cc: Ms. Sharon Tirpak, U.S. Army Corps of Engineers, Galveston District
Mr. Jahanbakhsh Behnam, U.S. Environmental Protection Agency Region 6
Mr. Ruben I. Velasquez, P.E., Post, Buckley, Schun & Jernigan