I. INTRODUCTION

A. A BRIEF HISTORY OF THE TEXAS AIR POLLUTION CONTROL PROGRAM

1. GENERAL

Prior to the passage in 1965 of the Clean Air Act of Texas, V.T.C.S., 4477-4, by the 59th Legislature, Regular Session, the responsibility for investigating and controlling atmospheric pollution was vested in the Texas State Department of Health. The Clean Air Act of Texas changed the basic administration of the Texas Air Pollution Control Program by creating a nine-member Texas Air Control Board which became the legal entity responsible for the control and abatement of air pollution.

The Federal "Clean Air Act" and the amended Federal "Air Quality Act of 1967" provided funds appropriated by the Congress to develop, establish, improve, and maintain air pollution control programs of an interstate, state, county, or local air pollution control agency. The Texas Air Control Board and several cities and counties in the State of Texas, through their health departments, received Federal grants to establish air pollution control programs. In addition, numerous local health departments began cooperating in the maintenance and operation of noncontinuous sampling stations through which the amount or effects of suspended particulate and common gaseous pollutants such as sulfur dioxide, ozone, and nitrogen dioxide were measured.

In 1967, the Clean Air Act of Texas was superseded by the Texas Clean Air Act, Article 4477-5, V.T.C.S., which, as amended, is the basic air pollution statute in Texas.

2. TEXAS AIR CONTROL BOARD

The original Board was appointed by the Governor in March, 1966. The Board is now composed of nine members appointed by the Governor for overlapping terms of six years. Of the appointed members, one must be an engineer, one a licensed practicing physician, one actively engaged in management of private manufacturing or industrial concern, one experienced in the field of municipal government, and one must be an agricultural engineer. The remaining four members are appointed to represent the general public. Prior to Fiscal Year 1973 administrative procedures regarding basic personnel, necessary laboratory assistance and other facilities were provided by the Texas State Department of Health as provided by the Texas Clean Air Act (Article 4477-5, V.T.C.S., as amended 1971, Section 2.09. Acts of the 63rd Legislature Regular Session 1973 passed House Bill 739 amending the Texas Clean Air Act. This amendment in effect relieves the Texas State Department of Health of all administrative procedures regarding basic personnel, necessary laboratory assistance and other facilities, and makes the Texas Air Control Board directly responsible for these

functions. Administrative procedures regarding enforcement were not altered. The Executive Director is selected by the Board and is the chief executive officer of the program.

3. PLAN FOR THE CONTROL OF AIR POLLUTION

After appointment of the original members by the Governor in March, 1966, the Texas Air Control Board held several meetings to study the preexisting air pollution control program of the State Health Department, to study rules, regulations, and laws of other states, to draft its procedural rules for the conduct of business, and to organize its staff to conduct a comprehensive program for the management of air resources of the State.

In order to fulfill the purpose of the Clean Air Act of Texas--"To safeguard the air resources of the state from pollution by controlling or abating air pollution and emissions of air contaminants, consistent with the protection of health, general welfare, and physical property of the people, including the esthetic enjoyment of the air resources by the people and the maintenance of adequate visibility," the Texas Air Control Board set forth the following basic objectives to guide its air pollution control program:

a. The preservation of the health and welfare of man now and in the future.

b. The protection of animal and plant life.

c. The prevention of damage to physical property and interference with its normal use and enjoyment.

d. The provision of visibility required for safe air and ground transportation.

e. The maintenance of an aesthetically acceptable environment.

f. The assurance that a significant reduction in the emissions of all harmful pollutants into the Texas atmosphere is realized, either through voluntary actions or by enforcement of the Texas Clean Air Act and Board Regulations.

These guiding principles remain unchanged.

To provide a sound administrative, scientific, and engineering basis for achieving the objectives, the Board adopted the rules and regulations which it considered necessary. The Regulations provide specific guidelines for industries, municipalities, and the general public in planning corrective or preventive actions where necessary.

These regulations establish ambient air and emission standards. These standards have been changed from time to time to reflect the dynamic "state of the art" and air pollution potential in the State. The most recent are, of course, included in this plan.

4. PROGRAM EVOLUTION

The program has evolved from just a few people at its inception to the current level of over 230 personnel, representing many and various technical and administrative disciplines. Additionally, over 180 personnel are employed by local programs and they are involved either full or part-time in air pollution control. The rapid expansion demonstrates the real concern of the people of Texas for attaining and maintaining clean air. We believe that we have a mandate to move even more rapidly than in the past to confirm their trust.

B. PLAN PURPOSE

The Texas Air Control Board has adopted the National primary and secondary ambient air quality standards for Implementation Plan purposes. The attainment date for the primary standards was set at three years after the approval of the Plan by the EPA Administrator. Compliance dates for the secondary standards will be set at a reasonable time after compliance with the primary standards are achieved. A "reasonable time" will be determined by the Board. Additionally, the Board resolved that the Plan should comply with the minimum requirements of Federal Register dated November 25, 1971. The purpose of the Plan, therefore, is to fulfill the minimum requirements specified in the Federal Register and provide compliance with the National primary standards three years after the plan is approved.

The Board recognized that because of pollutant concentrations, necessary controls in urban and/or industrial areas may be more stringent than those required in predominantly rural areas. For urban areas, comprehensive programs will be required. These will include atmospheric monitoring networks, source measurements, and long-range planning. Activities in rural areas, at the other extreme, usually can be limited to intermittent sampling to determine background levels of pollutants and trends, complaint investigations, and the enforcement of those regulations needed to protect health and welfare and to abate nuisance problems.

TEXAS AIR CONTROL BOARD ORGANIZATION

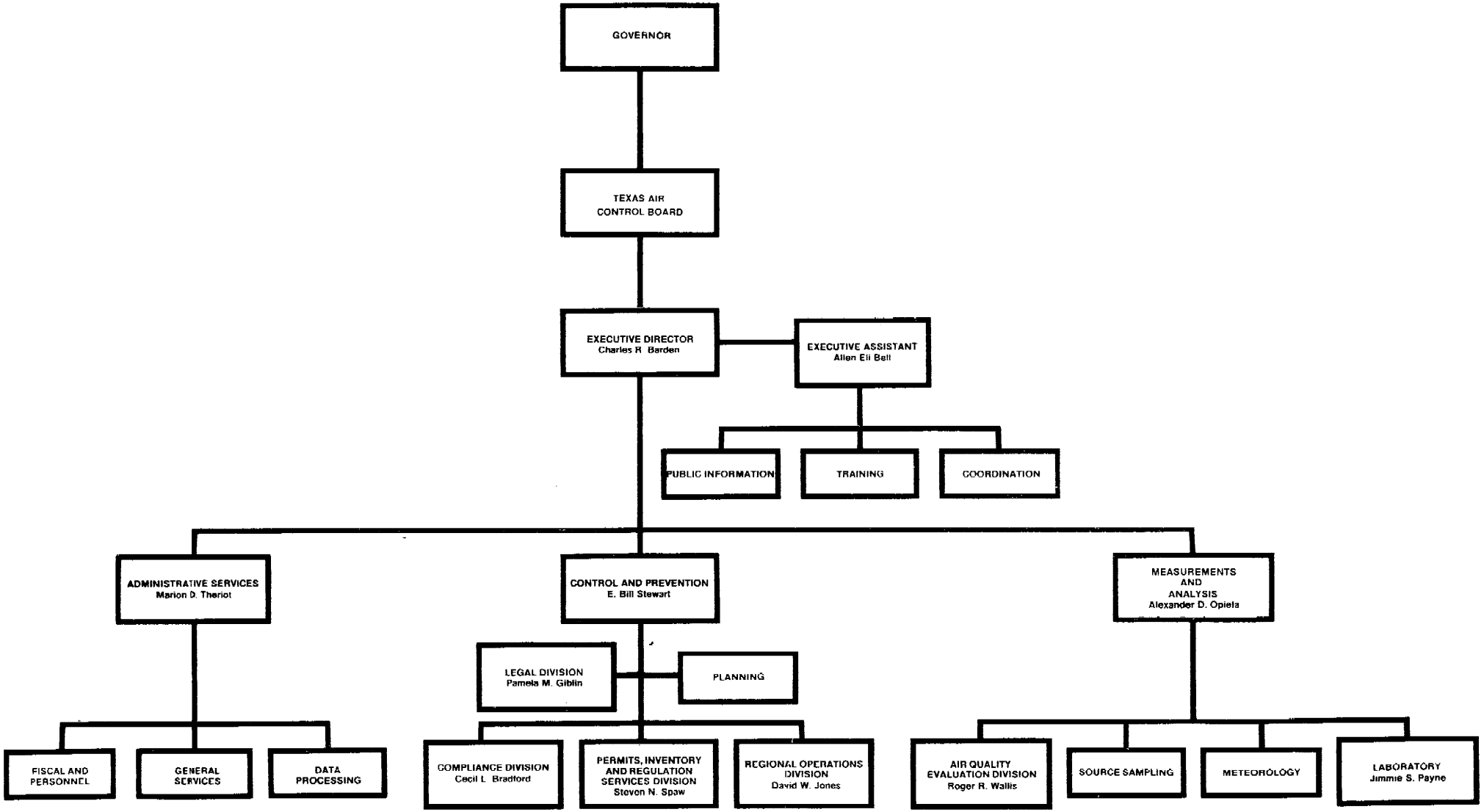

Revised 8-15-74

C. SERVICE ORGANIZATIONS

To accomplish the task outlined by the Clean Air Act of Texas and the Implementation Plan, the staff of the Texas Air Control Board is described below.

1. EXECUTIVE ASSISTANT

The Office of the Executive Assistant coordinates the work, contacts, and relations between the Texas Air Control Board and the external agencies, groups and individuals with which it has business. The office disseminates information and literature relating to air pollution control to the media and the general public. It provides training concerning air pollution control to supplement the previous experience and academic or professional training which personnel bring to the job.

2. ADMINISTRATIVE SERVICES

The Administrative Staff is responsible for all administrative matters relative to the Texas Air Control Board. A technical library and literature storage and retrieval system is maintained. Through data processing, provides timely handling of reports, analyses, studies, listings, mailing, and other projects as requested or desired by the recipient. (To include simulation and modeling capabilities.) Fiscal and personnel functions required in the operation of the organization are administered. Technical grant assistance is given to local air pollution control programs.

3. CONTROL AND PREVENTION

a. LEGAL DIVISION

The Legal Division assists in the enforcement of the Texas Clean Air Act and the Rules and Regulations of the Texas Air Control Board. The Legal Division also advises the Board and the Executive Director on legal matters and the legal implications of all Texas Air Control Board staff operations. The primary functions of the division include conducting public hearings on alleged air pollution violations and other matters. It also serves as the liaison between the Board and the Attorney General's office in the prosecution of air pollution cases. The Legal Division assists in the formulation of new regulations.

b. PERMITS, INVENTORY AND REGULATION DEVELOPMENT DIVISION

Permits and Inventory Division consists of the following Sections: Permits, Emissions Inventory, and Abatement. The Permits Section effects control of point source emissions from new or modified sources within the State. This helps prevent an increase in undesirable emission levels from new sources. The Emissions Inventory Section accumulates statewide emission data concerning type of pollutant, quantities emitted, location of emission source, and patterns of emissions. This data is used to make projections of ambient air conditions in various regions of the State. The data is also made available to all local air pollution control programs, thus preventing duplication of data gathering efforts. The Abatement Section contributes to the attainment of the mission by two methods. One method is dissemination of information on control technology to those in need of technical information. Another method is the development of new regulations for the control of undesirable air contaminants.

c. COMPLIANCE DIVISION

The Compliance Division coordinates all abatement activities throughout the State by close cooperation with the local programs and TACB Divisions to insure that all sources are either in compliance or making satisfactory progress on specific abatement schedules. All complaints received are processed. This Division accumulates and compiles data for public hearings and/ or litigation on compliance matters. Compliance personnel assist in Texas Air Control Board meetings by preparing the agenda, arranging meeting facilities, and presentation of compliance data. When required, they also assist in investigations, including complaints, opacity readings, property line sampling. This group also administers the variance activities.

d. REGIONAL OPERATIONS DIVISION

Regional Operations Division is comprised of staffs of twelve Air Quality Control Regions and a central office headquarters staff. Each regional office, strategically located within each region, is organized and staffed to accomplish the following: surveillance of air pollution sources in the State on a biennial basis or as required and ground level

concentration sampling as necessary; participation in compliance conferences with private and public officials; investigation of air pollution complaints from the public; presentation of educational information to public and private organizations; operation and maintenance of the air quality monitoring network stations; investigation of construction and operating permits; aid in the collection of emissions inventory data; assistance in conducting special studies; and maintenance of good working relationships with local air pollution control programs. Laboratory and stack sampling capabilities are being developed at four regional office locations. The central office staff is responsible for staffing, budgeting, and coordinating the activities of the twelve regional offices. The central office staff also administers the Emergency Episode Plan, operates the Emergency Action Center and coordinates regional field staff activities during air pollution emergencies.

e. PLANNING SECTION

The Planning Section provides the preparatory planning required to define and estimate the tasks for new or evolving pollution control programs. Planning supports the Agency in anticipating activities and resource requirements for efficient and effective management. When required, the Planning Section will integrate planning activities of all Divisions. This section also reviews environmental impact statements and updates the Texas Air Pollution Control Implementation Plan as required by operational changes and the Federal Register.

4. MEASUREMENTS AND ANALYSIS

a. AIR QUALITY EVALUATION DIVISION

This division determines by special surveys, schedules 24-hour sampling, continuous monitoring, and related data reduction facilities, the air quality in Texas. Provides logistic support to other TACB Programs. Installs, operates and maintains a statewide network of automatic continuous as well as mechanical-integrating atmospheric monitoring/sampling equipment. Acts as a central collection point for data pertaining to ambient air collected by all agencies within the State, and furnishes appropriate ambient air summaries to contributing agencies, the Environmental Protection Agency and other concerned agencies.

b. LABORATORY DIVISION

The Laboratory Division supports several TACB Divisions by analysis of samples returned to Austin: Air Quality Evaluation by analysis of TASN samples and special survey samples; Source Sampling by analysis of stack and property line samples; Regional Operations by analysis of property line samples. Samples taken by local air pollution control agencies are also analyzed on request. Laboratory Division chemists test all analytical methods used, and where required, modify or develop new methods. A manual of standard analytical methods is published by the division.

c. SOURCE SAMPLING SECTION

The Source Sampling Section provides timely response to requests originating within the Texas Air Control Board for stack sampling and property line sampling of designated sources. It conducts investigations and special studies of individual sources and industry groups. It evaluates proposed alternate methods for sampling where stack sampling is neither possible nor practical. It effects training of TACB personnel in source sampling techniques and insures standardization of sampling methods throughout the State.

d. METEOROLOGY SECTION

The Meteorology Section supports all aspects of the Texas Air Control Board with weather and climatological information prepared for those projects of the Texas Air Control Board staff in which meteorology is or should be considered in decision making. As consultants to other activities of the Texas Air Control Board, the Meteorology Section personnel gather, collate, analyze, and disseminate weather and climatological data, offer expert advice on weather phenomena as they affect other operations of the staff, and prepare and run computerized diffusion models for requesting sections of TACB. The Austin-based professional and technical personnel in the Meteorology Section use reference materials and computer programs to support, as needed, staff members serving the Austin headquarters, personnel in the field, and those (such as the Emergency Action Center) which act as a liaison between both.

D. REGIONAL DESCRIPTIONS

In order to control air pollution and enforce the regulations of the Texas Air Control Board, the State of Texas has been divided into twelve Air Quality Control Regions. The Regions vary widely in geography, topography, population density and industrialization. Each region has its own unique set of Air Quality Control problems; however, Regional offices have been created under the Texas Air Control Board to stimulate regional cooperation and informational exchange. In this section of the Plan the geography, demography and industrial development of each region is discussed. These narratives are supplemented by maps of the State showing the region location, tables of county population density, and for one city in each region a wind rose diagram and the mean maximum mixing depths. The data for wind roses and the estimates of mean maximum mixing depths are presented only for the purpose of illustration and do not represent an average for the region. Source of the weather data was from George C. Holzworth, "Estimates of Mean Maximum Mixing Depths in the Contiguous United States", Monthly Weather Review, Vol. 92, No. 5, (May 1964), pp. 235-242.

1. Region I

Region I is composed of 31 counties covering 28,029 square miles in the North Central sector of the State. As shown in Figure 1, the region is bounded on the north by the state of Oklahoma, on the east by Region VIII, and on the west and south by Regions II and VI.

a. Geography and Climate

The western two-thirds of the region is in the Rolling Prairies subdivision and consists of rolling prairies with some low hills. The terrain in the hill areas is rough and broken. The eastern third of the region is located in the West Cross Timbers subdivision and is characterized by gently rolling plains. The Cross Timbers and Rolling Prairies rise in altitude from 700 feet on the east to a maximum of 2,600 feet in the west. The region is drained by four major rivers, the Brazos, Colorado, Trinity, and Wichita.

The climate in Region I is usually pleasant with a temperature range of 30°F (mean minimum) in January to 97°F (mean maximum) in July. Usually, for any given day there is a wide range between maximum and minimum temperatures characteristic of the Great Plains of North America. Rapid temperature changes do occur, however, as the result of cold arctic air masses sweeping down the central plains into northern Texas. These periods of cold weather are usually of short duration.

The annual rainfall in Region I averages 25 inches and occurs primarily in the months of April, May, June, September,

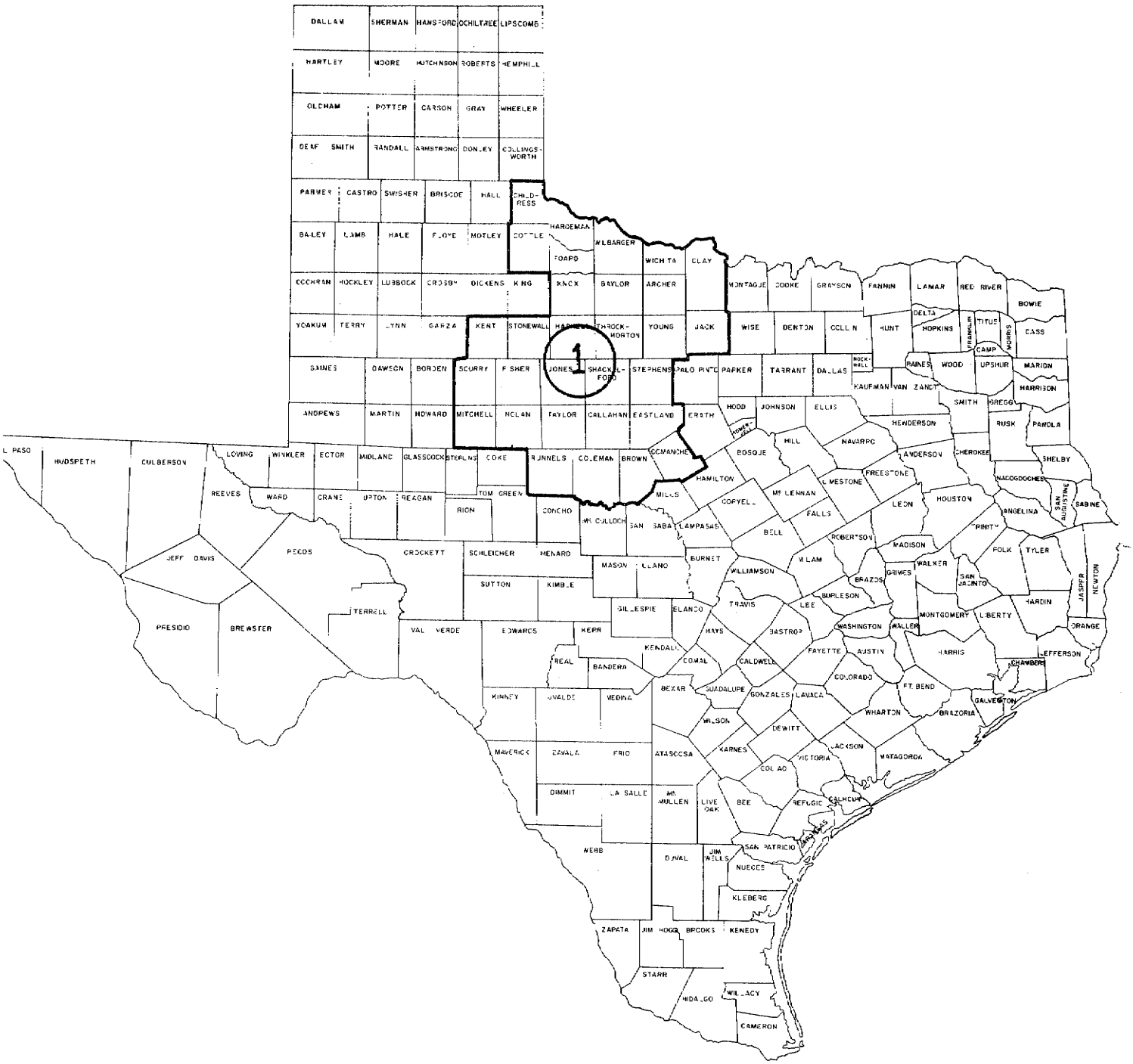

Figure 1 - Region I Location

Figure 2 - Region 1 Wind Rose
Annual Percentages

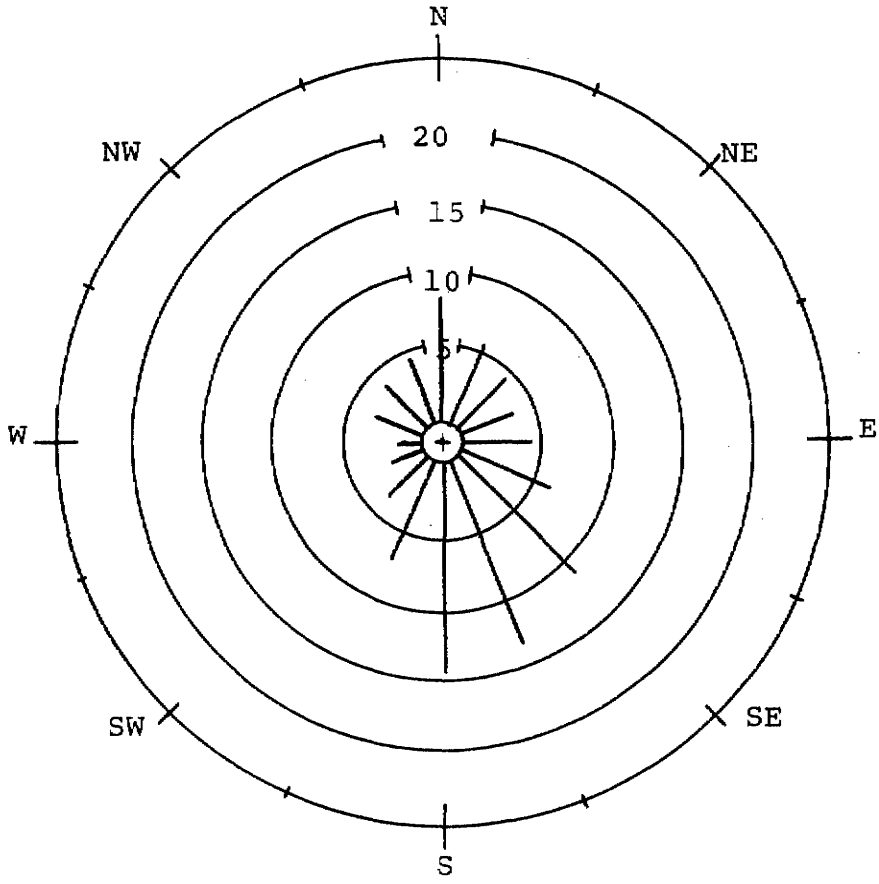

TABLE 1

REGION 1

ESTIMATES OF MEAN MAXIMUM MIXING DEPTHS (FEET ABOVE SURFACE)

Jan.	Feb.	Mar.	Apr.	May	June	July	Aug.	Sep.	Oct.	Nov.	Dec.
1640	2690	3610	4200	4530	5580	6890	7220	4920	3440	2620	1610

and October. There are occasional sand storms which create an adverse effect on air quality. These sand storms are the result of north-westerly winds blowing across the arid regions northwest of Region I. The sand storms are generally minor in nature and have become less frequent in the past several years. A wind rose is shown in Figure 2. The upper air vertical mixing depth is shown in Table 1.

The major natural resources in Region I are the fertile soil and an abundant amount of petroleum and natural gas. In many of the counties sand, gravel, and stone are quarried. Clay and gypsum are also mined; however, cement is produced in only one county. The plains area is half mesquite woodland and half treeless prairie. The eastern timber area has woody oak groves, mesquite and juniper brakes.

The soils in Region I range from coarse sand to tight compact clay with the major portion being sandy or red loam. Approximately two-thirds of the area is range land; however, dry cultivation and irrigation are important in certain localities.

The two major economic activities are agriculture and the petroleum industry. Both are widely distributed throughout Region I. Cotton growing, sheep, cattle and other livestock raising are the primary agricultural activities. The petroleum industry includes crude oil production, natural gas production, pipe line distribution systems, liquification of natural gas, and refining. Concentrations are not in well-defined areas, but location depends primarily on dry land areas, water supply, soil types, and terrain.

Moderate economic growth is predicted for Region I. No great influx of heavy industry is anticipated; however, it is expected that ancillary small businesses to the petroleum industry and agriculture will continue to increase, especially in the more urban areas of Wichita and Taylor counties.

b. Demography

Region I has a total population of 492,609 people. According to the 1970 census the region has a population density of 18 people per square mile. Of this population, approximately 45%, or 219,715, are concentrated in Taylor (Abilene) and Wichita (Wichita Falls) counties. Population and population density by county is given in Table 2.

Population estimates for the region vary, but a comparison of the 1960 census with the 1970 census indicates a decrease

TABLE 2

Region I Demographic Statistics

County	1970 Census	Area in Square Miles	Density
Archer	5,759	907	6
Baylor	5,221	857	6
Brown	25,877	949	27
Callahan	8,205	857	9
Childress	6,605	701	9
Clay	8,079	1,101	7
Coleman	10,288	1,282	8
Comanche	11,898	971	12
Cottle	3,204	901	3
Eastland	18,092	952	19
Fisher	6,344	906	7
Foard	2,211	676	3
Hardeman	6,795	685	10
Haskell	8,512	881	10
Jack	6,711	944	7
Jones	16,106	950	17
Kent	1,434	901	2
Knox	5,972	853	7
Mitchell	9,073	922	10
Montague	15,326	934	16
Nolan	16,220	921	18
Runnels	12,108	1,059	11
Scurry	15,760	904	17
Shackelford	3,323	887	4
Stephens	8,414	925	9
Stonewall	2,397	927	3
Taylor	97,853	913	107
Throckmorton	2,205	913	2
Wichita	121,862	612	199
Wilbarger	15,355	954	16
Young	15,400	884	18
	492,609	28,029	

Average Population Density = $\frac{492,609}{28,029} = 17.6$

in population for most counties in the region. The urban areas, especially the cities of Abilene and Wichita Falls, have grown in area and population. It is anticipated that this trend will continue; however, the rate of increase will not be as rapid. Rural areas are expected to decrease slowly or remain static.

Because of the increase in population in the major urban areas, vehicular traffic, with resultant vehicular emissions, is expected to increase. Problems with vehicular emissions could result if an excessive growth rate in these two metropolitan areas is experienced.

c. Industrial Development

In Region I the major industries are agriculture, petroleum, and natural gas. These industries are widely distributed throughout the region. Mineral processing is a minor industry, with gypsum production in Fisher, Jones, Nolan, and Hardeman counties; magnesium and chlorine in Scurry County; lightweight aggregate (expanded shale) in Brown and Eastland counties; cement in Nolan County; clay products such as brick and tile in Brown, Coleman, Comanche, Eastland, Fisher, and Nolan counties.

It is expected that industrial development of this type will continue to slowly increase; however, no significant trends are apparent.

All new industries are required by present state regulations to be in compliance upon beginning operations. No variances have been granted to new business in the region. Almost every industry has voluntarily complied with the state regulations or the requirements of the Texas Clean Air Act.

2. Region II

Region II is composed of 40 counties covering 38,656 square miles in the northernmost part of the state. As shown in figure 3, the region is bounded on the north by the state of Oklahoma, on the east by the state of Oklahoma and Region I, on the south by Region VI and on the west by the state of New Mexico.

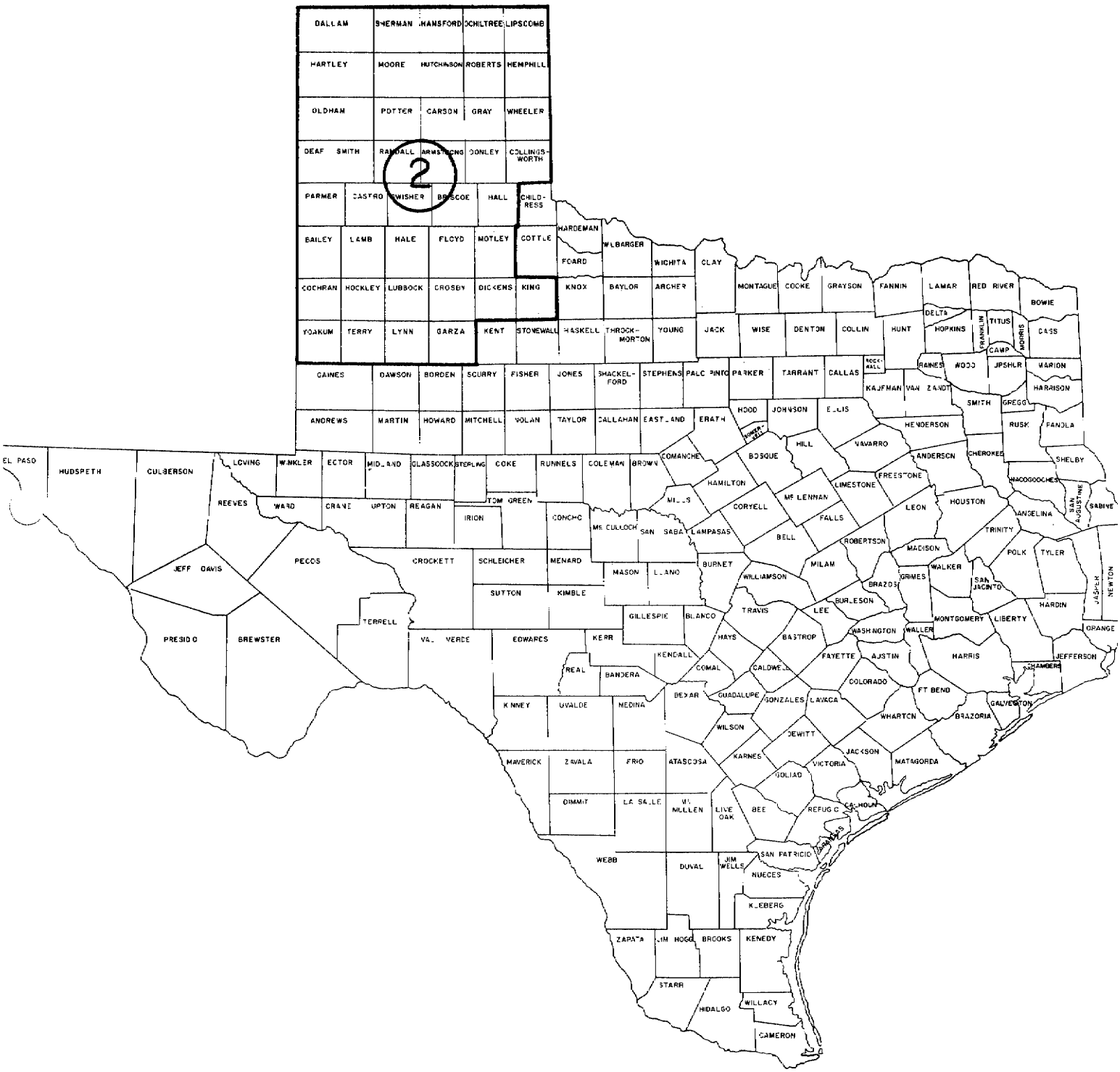
DALLAM
SHERMAN
HANSFORD
OCHILTREE
LIPSCOMB
HARTLEY
MOORE
HUTCHINSON
ROBERTS
HEMPHILL
OLDHAM
POTTER
CARSON
GRAY
WHEELER
DEAF SMITH
RANDALL
ARMSTRONG
DONLEY
COLLINGSWORTH
2
PARMER
CASTRO
SWISHER
BRISCOE
HALL
CHILDRESS
BAILEY
LAMB
HALE
FLOYD
MOTLEY
COTTLE
HARDEMAN
WILBARGER
WICHITA
CLAY
FOARD
COCHRAN
HOCKLEY
LUBBOCK
CROSBY
DICKENS
KING
KNOX
BAYLOR
ARCHER
MONTAGUE
COOKE
GRAYSON
FANNIN
LAMAR
RED RIVER
BOWIE
YOAKUM
TERRY
LYNN
GARZA
KENT
STONEWALL
HASKELL
THROCKMORTON
YOUNG
JACK
WISE
DENTON
COLLIN
HUNT
DELTA
HOPKINS
FRANKLIN
TITUS
MORRIS
CASS
CAMP
GAINES
DAWSON
BORDEN
SCURRY
FISHER
JONES
SHACKELFORD
STEPHENS
PALO PINTO
PARKER
TARRANT
DALLAS
ROCKWALL
RAINES
WOOD
UPSHUR
MARION
KAUFMAN
VAN ZANDT
HARRISON
ANDREWS
MARTIN
HOWARD
MITCHELL
NOLAN
TAYLOR
CALLAHAN
EASTLAND
ERATH
HOOD
JOHNSON
ELLIS
SMITH
GREGG
HENDERSON
RUSK
PANOLA
EL PASO
HUDSPETH
CULBERSON
LOVING
WINKLER
ECTOR
MIDLAND
GLASSCOCK
STERLING
COKE
RUNNELS
COLEMAN
BROWN
COMANCHE
BOSQUE
HILL
NAVARRO
ANDERSON
CHEROKEE
SHELBY
REEVES
WARD
CRANE
UPTON
REAGAN
IRION
TOM GREEN
CONCHO
HAMILTON
MILLS
CORYELL
McLENNAN
LIMESTONE
FREESTONE
LEON
HOUSTON
NACOGDOCHES
ANGELINA
SAN AUGUSTINE
SABINE
McCULLOCH
SAN SABA
LAMPASAS
BELL
FALLS
ROBERTSON
TRINITY
MADISON
POLK
TYLER
JEFF DAVIS
PECOS
CROCKETT
SCHLEICHER
MENARD
MASON
LLANO
BURNET
WILLIAMSON
MILAM
BRAZOS
GRIMES
WALKER
SAN JACINTO
JASPER
NEWTON
SUTTON
KIMBLE
BURLESON
LEE
HARDIN
TERRELL
GILLESPIE
BLANCO
TRAVIS
MONTGOMERY
LIBERTY
ORANGE
PRESIDIO
BREWSTER
VAL VERDE
EDWARDS
KERR
HAYS
BASTROP
WASHINGTON
WALLER
KENDALL
FAYETTE
AUSTIN
HARRIS
JEFFERSON
REAL
BANDERA
COMAL
CALDWELL
CHAMBERS
COLORADO
FT BEND
KINNEY
UVALDE
MEDINA
BEXAR
GUADALUPE
GONZALES
LAVACA
GALVESTON
WHARTON
BRAZORIA
WILSON
DEWITT
JACKSON
MAVERICK
ZAVALA
FRIO
ATASCOSA
KARNES
VICTORIA
MATAGORDA
GOLIAD
DIMMIT
LA SALLE
McMULLEN
LIVE OAK
BEE
REFUGIO
CALHOUN
WEBB
DUVAL
JIM WELLS
SAN PATRICIO
NUECES
KLEBERG
ZAPATA
JIM HOGG
BROOKS
KENEDY
STARR
HIDALGO
WILLACY
CAMERON

Figure 3

Figure 4 - Region 2 Wind Rose
Annual Percentages

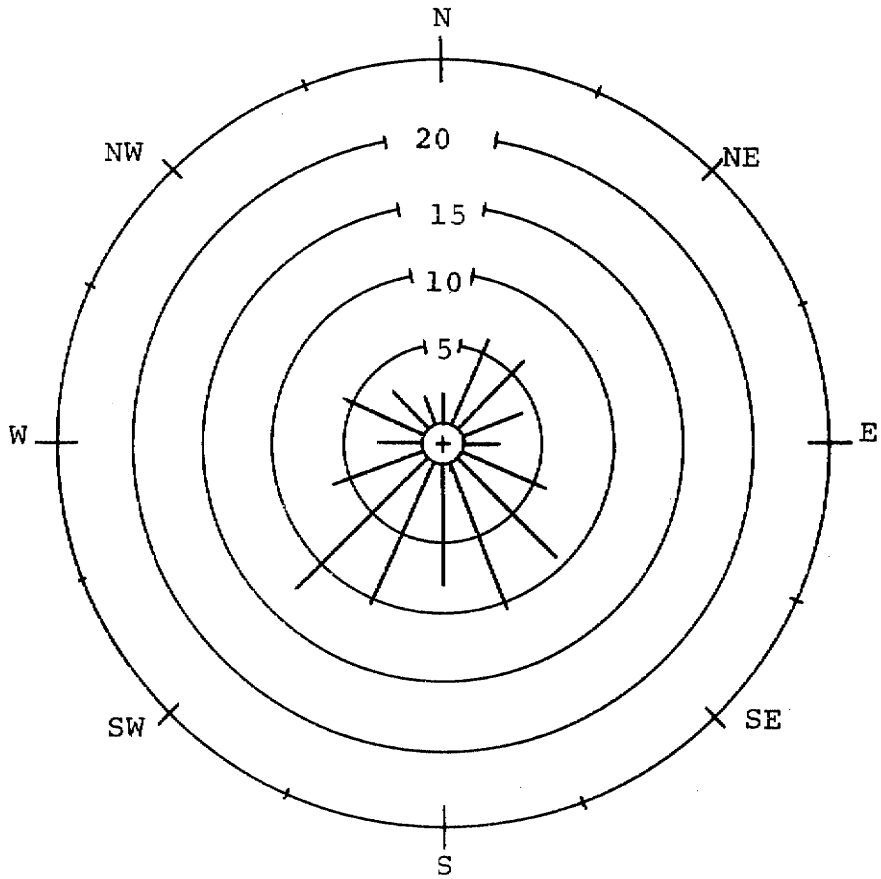

TABLE 3

REGION 2

ESTIMATES OF MEAN MAXIMUM MIXING DEPTHS (FEET ABOVE SURFACE)

Jan.	Feb.	Mar.	Apr.	May	June	July	Aug.	Sep.	Oct.	Nov.	Dec.
1570	2790	4270	4920	5910	6230	7220	7550	4920	3440	2620	1480

a. Geography and Climate

Region II is a composite of the two parts of Texas commonly called the Panhandle and the South Plains. The area is the southern edge of the Great Plains of North America. Geomorphically, the region is virtually featureless with the exception of the Cap Rock Escarpment, 50 to 1,000 feet high traversing the region on a north-south line from the Red River to the southeastern corner of the region in Garza county and the "canyon" country made by the Canadian River as it crosses the region on an east-west line just north of the city of Amarillo.

The terrain in the region is relatively level and free of natural vegetation. The lack of vegetation and terrain roughness result in fairly high surface winds.

The climate in Region II is pleasant with a temperature range of 23°F (mean minimum) in January to 94°F (mean maximum) in July. There is, however, generally a wide range between maximum and minimum temperatures on any given day, which is characteristic of the Great Plains. Temperature changes like those in Region I can occur rapidly, resulting from cold air masses passing through the region.

The annual rainfall in Region II averages 18 inches and occurs primarily in the spring and fall months. Because of the level terrain, high winds, and lack of vegetation, sand storms occur in the region; however, they are of relatively short duration. The airborne dust particles are large in comparison to particles encountered in air pollution control work, and these particles settle quickly, usually within 24 hours. Records from the Lubbock Weather Bureau for the 19 year period from 1949 through 1967 indicate only 3,292 hours of blowing dust (visibility below six miles) for an average of 173.3 hours annually, or approximately 2% of the time.

The prevailing winds in the region are from the southwest in the spring and summer, and from the northwest in the fall and winter. A wind rose showing this condition is shown in Figure 4. The upper air vertical mixing depth is shown in Table 3.

The major natural resources in Region II are the naturally fertile soil, underground water and abundant petroleum and natural gas deposits. Through irrigation the soil and underground water have been combined into an important agricultural asset.

Economic activity in the region falls into one of three

main groups. These groups are agricultural, petroleum and petrochemical, and cattle feedlots. These groups tend to fall into specific geographic areas within the region. The southern portion of the region is predominately agricultural. Lubbock is the center of activity within the region. Grain sorghums are grown throughout the region. Cotton is grown from the southern boundary to as far north as Hale County and wheat is grown from Hale County northward through the Panhandle. Petroleum and petrochemical industries are concentrated in the area to the north and northeast of Amarillo, principally in Moore, Hutchinson and Gray counties. There is some petroleum industry in the southwestern corner and the southeast of the region in Yoakum, Terry, Hockley, and Garza counties. The cattle feedlot industry is concentrated around Amarillo with most of the feedlots being either north or southwest of Amarillo. Considerable cattle feedlot activity exists as far south as Lubbock and is spread throughout the region in Deaf Smith, Bailey, Castro, Parmer, Dallam, Sherman, Hansford, Ochiltree, Moore, Randall, Swisher, Gray, Hale, Lubbock, and Cochran counties. There is one large zinc smelter located in Potter county adjacent to the northwest city limits of Amarillo.

At present, all available factors tend to indicate moderate economic growth in the region with the greatest growth in the Lubbock area. No great influx of heavy industry is anticipated. The cattle feedlot industry is still in the development stage and more of these lots are expected to be built in the next several years.

b. Demography

Region II has a total population of 658,093 people. According to the 1970 census, the region has a population density of 17 people per square mile. Of this population, 323,691 are concentrated in three counties. Potter and Randall counties (Amarillo) to the north contain 144,396 people and Lubbock County (Lubbock) in the south contains 179,295 people. The two metropolitan areas combined contain approximately 49% of the total population within the region. The remainder of the population is fairly evenly distributed, as shown in Table 4.

It can be reasonably expected that a slight population increase will be experienced over the next several years. Population growth in the north of the region should remain static with a slight decrease in rural areas. The two metropolitan areas of Lubbock and Amarillo should increase even though Amarillo showed a slight decrease in the last census.

Because of the increase in these major urban areas, vehicular traffic with resultant vehicular emissions are expected to increase. The problem should become evident in

TABLE 4

REGION 2 DEMOGRAPHIC STATISTICS

County	1970 Census	Area in Square Miles	Density
Armstrong	1,895	909	2.1
Bailey	8,487	832	10.2
Briscoe	2,794	887	3.1
Carson	6,358	899	7.1
Castro	10,394	876	11.9
Cochran	5,326	782	6.8
Collingsworth	4,755	899	5.3
Crosby	9,085	911	10.0
Dallam	6,012	1,494	4.0
Deaf Smith	18,999	1,507	12.6
Dickens	3,737	930	4.0
Donley	3,641	909	4.0
Floyd	11,044	993	11.1
Garza	5,289	914	5.8
Gray	26,949	937	28.8
Hale	34,137	979	34.9
Hall	6,015	896	6.7
Hansford	6,351	907	7.0
Hartley	2,782	1,489	1.9
Hemphill	3,084	909	3.4
Hockley	20,396	903	22.6
Hutchinson	24,443	884	27.7
King	464	944	0.5
Lamb	17,770	1,022	17.4
Lipscomb	3,486	934	3.7
Lubbock	179,295	892	201.0
Lynn	9,107	915	10.0
Moore	14,060	912	15.4
Motley	2,178	1,011	2.2
Ochiltree	9,704	905	10.7
Oldham	2,258	1,466	1.5
Parmer	10,509	859	12.2
Potter	90,511	901	100.5
Randall	53,885	911	59.1
Roberts	967	892	1.1
Sherman	3,657	914	4.0
Swisher	10,373	888	11.7
Terry	14,118	898	15.7
Wheeler	6,434	916	7.0
Yoakum	7,344	830	8.8
Total	658,093	38,656	

$$\text{Average Population Density} = \frac{658,093}{38,656} = 17$$

the city of Lubbock before Amarillo for two reasons:

(1) Lubbock's larger population figure and the larger population density for the Lubbock metropolitan area.

(2) Lubbock has no rapid-transit system for handling automobile traffic while Amarillo has a traffic system that allows a fairly rapid dispersal and flow pattern for traffic in the area. Congestion and traffic delays are presently commonplace in Lubbock.

c. Industrial Development

In Region II the major industries are agriculture, cattle feedlots, petroleum and petroleum by-products and support industries. These industries are widely dispersed throughout the region with agriculture concentrating in the south and petroleum in the north.

There are channel-process carbon black plants in Carson County with widespread asphalt batching plants and smelting facilities. Oil refining and storage facilities are located throughout the region.

Cattle feedlots are located primarily in the northern rangeland; however, this industry is expected to spread southward in increasing numbers. Cotton gins and cotton processing is not expected to expand at any great rate. This industry is primarily located in rural areas and in small communities.

No apparent trends in industrial development or expansion are evident with the exception of the cattle feedlot business. This industry will increase with the attendant complaints of odors associated with this enterprise.

According to the latest information, all major industries within Region II are in compliance with Texas Air Control Board Regulations with the exception of the smelting and refining plant in Amarillo which is under the Texas Air Control Board Order to achieve compliance, and a refinery which is also under a Texas Air Control Board compliance schedule.

All new industries are presently in compliance with Texas Air Control Board Regulations and industries beginning operations are required by law to be in compliance.

The vast majority of industries have voluntarily complied with the Texas Air Control Board Regulations. Due to unique

circumstances some businesses, mostly the smaller in size, have not complied.

3. Region III

Region III is composed of the 29 counties located in the central section of the State. As shown in Figure 5, this 24,633 square mile area is bounded on the north by Region VIII, on the east by Regions XII and X, on the south by Region IX, and on the west by Regions VI and IX. It is the only region in the state completely enclosed by other Texas regions.

a. Geography and Climate

Region III consists of four physiographic areas. These areas are the Post Oak Savannah, covering almost the entire Eastern portion of the region, the Blackland Prairies, covering the central portion of the region and a portion located in the midst of the Post Oak Savannah, the Cross Timbers and Prairies, covering the western portion of the region, and the Edwards Plateau, covering the extreme southern portion of the region.

The Post Oak Savannah consists of sandy soil of a coarse texture. It is generally timbered and is gently rolling to hilly. The soil is not considered highly fertile except in the lowlands where the land is more compact.

The Blackland Prairies sector is a vegetational area of black, fine textured soil. It is generally flat-lying with some rolling and hilly areas in the western portion of the region.

The Cross Timbers and Prairies is seperated from the Blackland Prairies by the Balcones Escarpment. Two distinct soil groups are included in the Cross Timbers and Prairies--the West Cross Timbers and the Grand Prairies; but they are so interspersed that they are treated as a conglomerate. The Cross Timbers and Prairies consists of medium and coarse textured soils, grey or reddish in color and generally supporting Post and Blackjack Oak. The area is rolling to hilly and is particularly hilly along the Escarpment.

The Edwards Plateau is commonly called the "Texas Hill Country". The soil is generally coarse and the terrain hilly.

The climate in this region is one of the more pleasant in the state. The temperatures range from 38°F (mean minimum) in

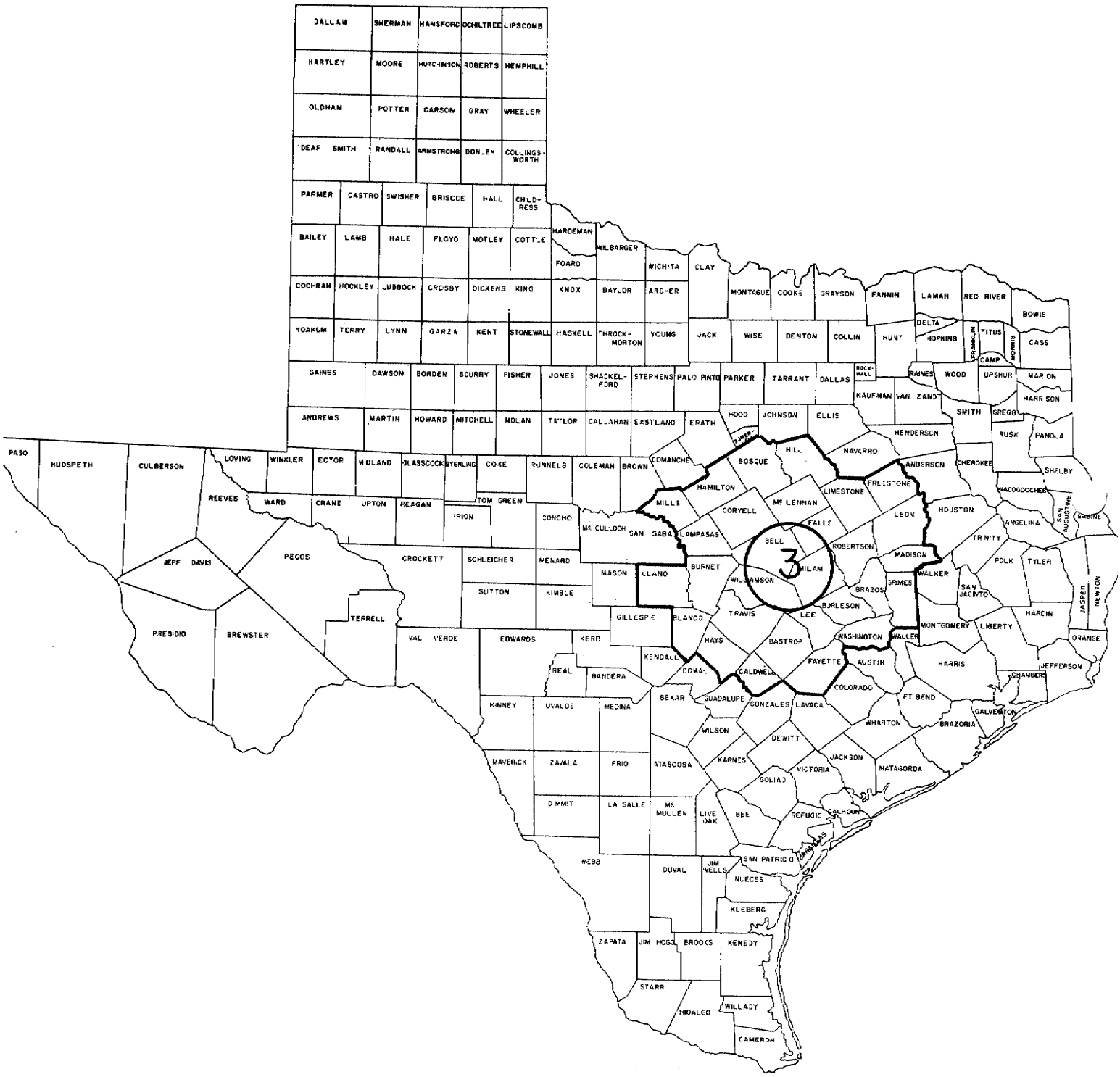
DALLAM
SHERMAN
HANSFORD
OCHILTREE
LIPSCOMB
HARTLEY
MOORE
HUTCHINSON
ROBERTS
HEMPHILL
OLDHAM
POTTER
CARSON
GRAY
WHEELER
DEAF SMITH
RANDALL
ARMSTRONG
DONLEY
COLLINGSWORTH
PARMER
CASTRO
SWISHER
BRISCOE
HALL
CHILDRESS
BAILEY
LAMB
HALE
FLOYD
MOTLEY
COTTLE
HARDEMAN
FOARD
WILBARGER
WICHITA
CLAY
COCHRAN
HOCKLEY
LUBBOCK
CROSBY
DICKENS
KING
KNOX
BAYLOR
ARCHER
MONTAGUE
COOKE
GRAYSON
FANNIN
LAMAR
RED RIVER
BOWIE
YOAKUM
TERRY
LYNN
GARZA
KENT
STONEWALL
HASKELL
THROCKMORTON
YOUNG
JACK
WISE
DENTON
COLLIN
HUNT
DELTA
HOPKINS
FRANKLIN
TITUS
MORRIS
CASS
GAINES
DAWSON
BORDEN
SCURRY
FISHER
JONES
SHACKELFORD
STEPHENS
PALO PINTO
PARKER
TARRANT
DALLAS
ROCKWALL
CAMP
RAINES
WOOD
UPSHUR
MARION
KAUFMAN
VAN ZANDT
HARRISON
ANDREWS
MARTIN
HOWARD
MITCHELL
NOLAN
TAYLOR
CALLAHAN
EASTLAND
ERATH
HOOD
JOHNSON
ELLIS
SMITH
GREGG
HENDERSON
RUSK
PANOLA
PECOS
HUDSPETH
CULBERSON
LOVING
WINKLER
ECTOR
MIDLAND
GLASSCOCK
STERLING
COKE
RUNNELS
COLEMAN
BROWN
COMANCHE
BOSQUE
HILL
NAVARRO
ANDERSON
CHEROKEE
SHELBY
REEVES
WARD
CRANE
UPTON
REAGAN
IRION
TOM GREEN
CONCHO
HAMILTON
MILLS
CORYELL
McLENNAN
LIMESTONE
FREESTONE
NACOGDOCHES
LEON
HOUSTON
ANGELINA
SABINE
AUSTIN
McCULLOCH
SAN SABA
LAMPASAS
FALLS
BELL
ROBERTSON
TRINITY
JEFF DAVIS
CROCKETT
SCHLEICHER
MENARD
MASON
LLANO
BURNET
WILLIAMSON
MADISON
WALKER
POLK
TYLER
SUTTON
KIMBLE
BRAZOS
GRIMES
SAN JACINTO
JASPER
NEWTON
TERRELL
GILLESPIE
BLANCO
TRAVIS
LEE
BURLESON
HARDIN
PRESIDIO
BREWSTER
VAL VERDE
EDWARDS
KERR
HAYS
BASTROP
WASHINGTON
MONTGOMERY
LIBERTY
ORANGE
KENDALL
FAYETTE
AUSTIN
HARRIS
JEFFERSON
REAL
BANDERA
COMAL
CALDWELL
COLORADO
CHAMBERS
KINNEY
UVALDE
MEDINA
BEXAR
GUADALUPE
GONZALES
LAVACA
FT. BEND
GALVESTON
WILSON
DEWITT
WHARTON
BRAZORIA
MAVERICK
ZAVALA
FRIO
ATASCOSA
KARNES
JACKSON
VICTORIA
MATAGORDA
SOLIAD
DIMMIT
LA SALLE
McMULLEN
LIVE OAK
BEE
REFUGIO
CALHOUN
WEBB
DUVAL
JIM WELLS
SAN PATRICIO
NUECES
KLEBERG
ZAPATA
JIM HOGG
BROOKS
KENEDY
STARR
HIDALGO
WILLACY
CAMERON
3

Figure 5

Figure 6 - Region 3 Wind Rose
Annual Percentages

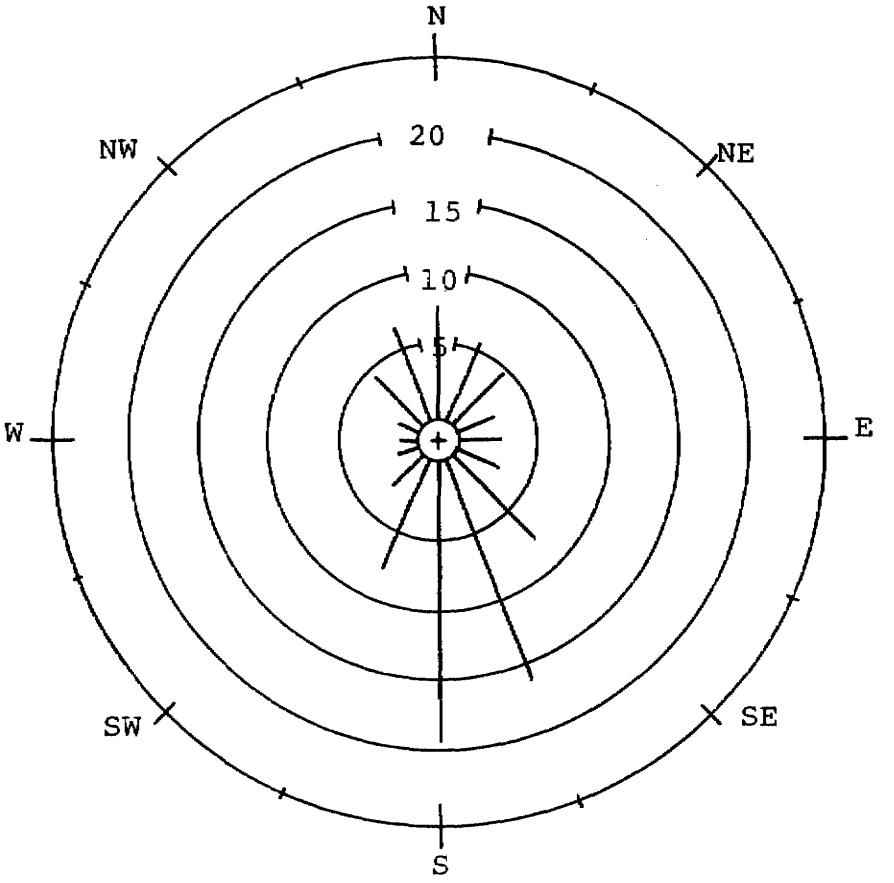

TABLE 5

REGION 3

ESTIMATES OF MEAN MAXIMUM MIXING DEPTHS (FEET ABOVE SURFACE)

Jan.	Feb.	Mar.	Apr.	May	June	July	Aug.	Sep.	Oct.	Nov.	Dec.
1570	2530	3120	3770	4170	4920	5910	5230	4820	3770	2690	1800

January to 96°F (mean maximum) in July. Frontal systems which move into the northern regions of the state are generally subdued upon reaching the hill country. Summer showers and southern breezes cool the region during most of the summer months. Periods of cold or extremely hot weather are usually of short duration.

Rainfall in Region III occurs primarily in the months of April and May with summer showers resulting in an annual rainfall of 33 inches. Sand and dust storms are virtually unknown. A wind rose for the region is shown in Figure 6 and a vertical air mixing depth is given in Table 5.

The major natural resources in Region III are oil and gas deposits, agriculture arising from the fertile soil, and limestone and granite extrusions in south and western portions of the region.

The two major economic activities are agriculture and industry associated with petroleum and petroleum by-products. Agriculture consists of raising cotton, market produce, grain sorghum, and livestock feed. Agriculture is concentrated in the central and northeastern areas of the region. Livestock production (sheep, goats, and cattle) is located in the western range lands, the hill country and the eastern prairies.

The petroleum and petrochemical industry is widely dispersed throughout the region with no particular concentrations. The lighter businesses are concentrated in the major urban area of Waco (McLennan County), Temple (Bell County), and Austin (Travis County).

Moderate economic growth is predicted for Region III with no great influx of heavy industry. The area of greatest economic activity is predicted to be in Austin (Travis County), Waco (McLennan County), and Temple (Bell County).

b. Demography

Region III has a total population of 1,004,282 people. The region has a population density of 41 people per square mile according to the 1970 cencus. As shown in Table 6, approximately 57% of these people are concentrated in Travis, McLennan and Bell counties.

Population predictions for the major counties have been made; however, predictions for the entire region vary widely. It can be expected that population in the urban areas connected by the Interstate Highway 35 will increase at a much higher

TABLE 6

REGION 3 DEMOGRAPHIC STATISTICS

County	1970 Census	Area in Square Miles	Density
Bastrop	17,297	885	20
Bell	124,483	1,044	124
Blanco	3,567	719	5
Bosque	10,966	1,003	11
Brazos	57,978	583	99
Burleson	9,999	679	15
Burnet	11,420	999	11
Caldwell	21,178	544	39
Coryell	35,311	1,043	34
Falls	17,300	761	23
Fayette	17,650	936	19
Freestone	11,116	861	13
Grimes	11,855	801	15
Hamilton	7,198	844	9
Hays	27,642	670	41
Hill	22,596	1,020	22
Lampasas	9,323	726	13
Lee	8,048	644	12
Leon	8,738	1,099	8
Limestone	18,100	932	19
Llano	6,979	942	7
McLennan	147,553	1,034	143
Madison	7,693	478	16
Milam	20,028	1,027	20
Mills	4,212	734	6
Robertson	14,389	873	16
Travis	295,516	1,015	291
Washington	18,842	611	31
Williamson	37,305	1,126	33
Total	1,004,282	24,633	

$$\text{Average Population Density} = \frac{1,004,282}{24,633} = 40.8$$

rate than the smaller cities not on this throughfare. Rural areas and the smaller towns in the region are expected to remain stable in population or suffer minor decreases.

Because of the population increases in the urban areas and especially along IH 35, vehicular emissions are expected to increase. A major problem from vehicular emissions could arise in Austin (Travis County) and Waco (McLennan County) during the next several years, although both of these areas have a favorable inversion frequency.

Overall air quality should not decrease as long as regulations are enforced. Major industries are widely dispersed in the region and problems arising from industrial concentration are not present.

c. Industrial Development

There have been no significant changes in industry in Region III during the last several years, and no major change is anticipated.

Major industries consist of aluminum production, asphalt, cement production, glass container manufacturing, rockwood production, and lime processing.

Minor industry consists of aggregate production, plastic products production, and rendering plants. There is a trend toward development of light industry in the urban areas.

Present regulations require all new industry to be in compliance when they commence operation. Generally, compliance has been voluntary.

4. Region IV

Region IV consists of seven counties covering 9,662 square miles along the southern banks of the Rio Grande River at the extreme southern tip of the state of Texas. As shown in Figure 7, the region is bounded on the north by Region IX, on the east by Region V and the Gulf of Mexico and on the west by the Rio Grande River - the International border between the United States and Mexico.

a. Geography and Climate

Region IV is generally a coastal plain with no unusual or

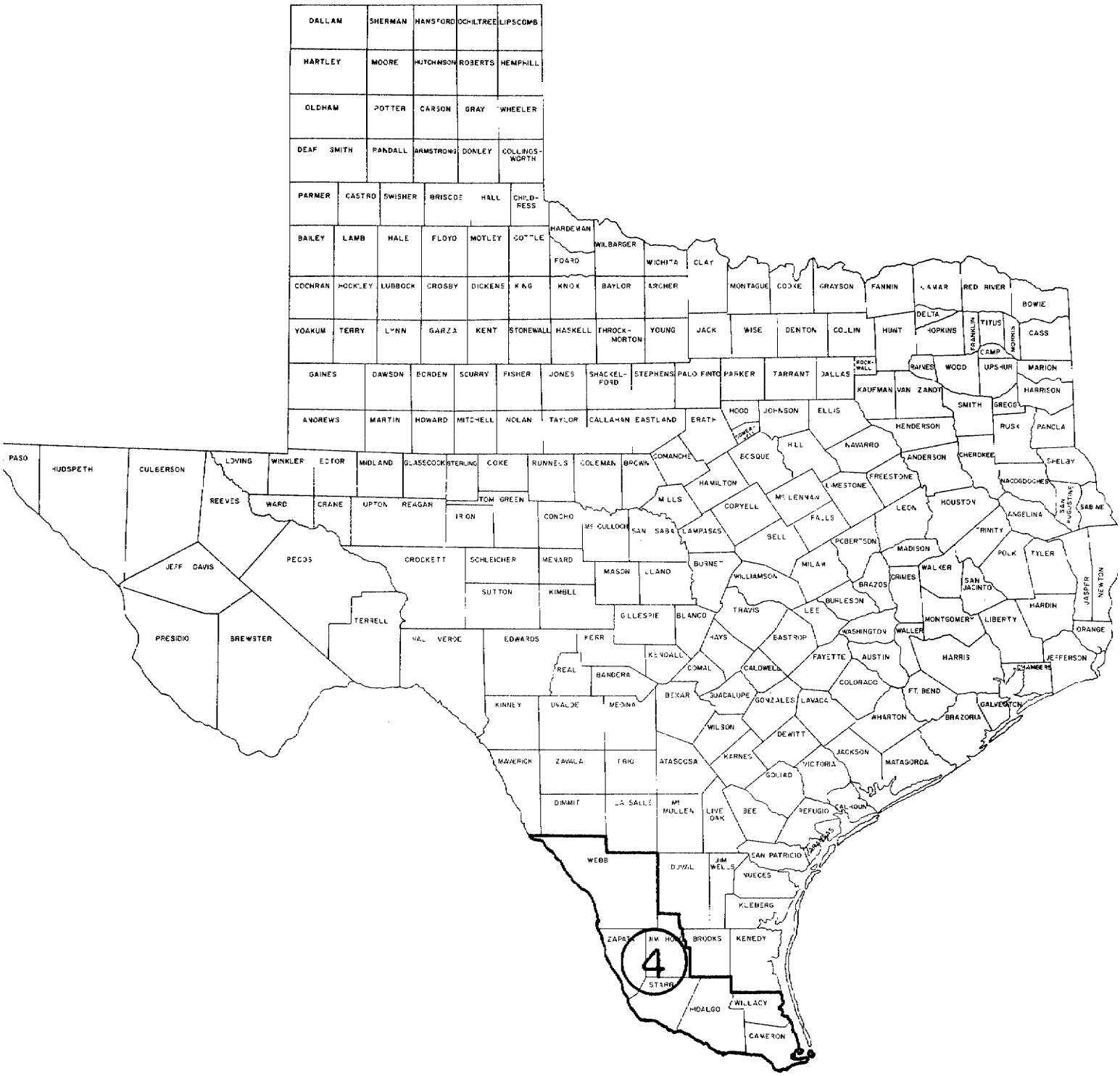
DALLAM
SHERMAN
HANSFORD
OCHILTREE
LIPSCOMB
HARTLEY
MOORE
HUTCHINSON
ROBERTS
HEMPHILL
OLDHAM
POTTER
CARSON
GRAY
WHEELER
DEAF SMITH
RANDALL
ARMSTRONG
DONLEY
COLLINGSWORTH
PARMER
CASTRO
SWISHER
BRISCOE
HALL
CHILDRESS
BAILEY
LAMB
HALE
FLOYD
MOTLEY
COTTLE
HARDEMAN
WILBARGER
FOARD
WICHITA
CLAY
COCHRAN
HOCKLEY
LUBBOCK
CROSBY
DICKENS
KING
KNOX
BAYLOR
ARCHER
MONTAGUE
COOKE
GRAYSON
FANNIN
LAMAR
RED RIVER
BOWIE
YOAKUM
TERRY
LYNN
GARZA
KENT
STONEWALL
HASKELL
THROCKMORTON
YOUNG
JACK
WISE
DENTON
COLLIN
HUNT
DELTA
HOPKINS
FRANKLIN
TITUS
MORRIS
CASS
GAINES
DAWSON
BORDEN
SCURRY
FISHER
JONES
SHACKELFORD
STEPHENS
PALO PINTO
PARKER
TARRANT
DALLAS
ROCKWALL
RAINES
WOOD
UPSHUR
CAMP
MARION
ANDREWS
MARTIN
HOWARD
MITCHELL
NOLAN
TAYLOR
CALLAHAN
EASTLAND
ERATH
HOOD
JOHNSON
ELLIS
KAUFMAN
VAN ZANDT
SMITH
GREGG
HARRISON
HENDERSON
RUSK
PANOLA
EL PASO
HUDSPETH
CULBERSON
LOVING
WINKLER
ECTOR
MIDLAND
GLASSCOCK
STERLING
COKE
RUNNELS
COLEMAN
BROWN
COMANCHE
BOSQUE
HILL
NAVARRO
ANDERSON
CHEROKEE
SHELBY
REEVES
WARD
CRANE
UPTON
REAGAN
TOM GREEN
IRON
CONCHO
MILLS
HAMILTON
CORYELL
McLENNAN
LIMESTONE
FREESTONE
NACOGDOCHES
SAN AUGUSTINE
SABINE
McCULLOCH
SAN SABA
LAMPASAS
FALLS
LEON
HOUSTON
ANGELINA
TRINITY
JEFF DAVIS
PECOS
CROCKETT
SCHLEICHER
MENARD
BELL
ROBERTSON
MADISON
POLK
TYLER
MASON
LLANO
BURNET
MILAM
WILLIAMSON
BRAZOS
GRIMES
WALKER
SAN JACINTO
SUTTON
KIMBLE
BURLESON
TERRELL
GILLESPIE
BLANCO
TRAVIS
LEE
HARDIN
JASPER
NEWTON
PRESIDIO
BREWSTER
VAL VERDE
EDWARDS
KERR
HAYS
BASTROP
WASHINGTON
WALLER
MONTGOMERY
LIBERTY
ORANGE
KENDALL
REAL
BANDERA
COMAL
CALDWELL
FAYETTE
AUSTIN
HARRIS
CHAMBERS
JEFFERSON
COLORADO
FT. BEND
BEXAR
GUADALUPE
GONZALES
LAVACA
KINNEY
UVALDE
MEDINA
WHARTON
GALVESTON
BRAZORIA
WILSON
DEWITT
JACKSON
MAVERICK
ZAVALA
FRIO
ATASCOSA
KERNES
VICTORIA
MATAGORDA
GOLIAD
DIMMIT
LA SALLE
McMULLEN
LIVE OAK
BEE
REFUGIO
CALHOUN
WEBB
DUVAL
JIM WELLS
SAN PATRICIO
NUECES
KLEBERG
ZAPATA
JIM HOGG
BROOKS
KENEDY
4
STARR
HIDALGO
WILLACY
CAMERON

Figure 7

prominent geomorphic features. The northwestern and western part of the region are gently rolling plains of the Nueces Plain. The region is drained primarily by tributaries flowing into the Rio Grande River and the Gulf of Mexico. This coastal plain rises in elevation from the south at sea level, to approximately 500 feet in the northwest corner of Webb County.

The climate in Region IV is warm but usually pleasant. The southeastern area is humid but marked by breezes from the Gulf. The northwestern area is arid with a typical desert climate. The region has a temperature range that varies widely during any particular day. The yearly extremes range from 48°F (mean minimum) in January to 97°F (mean maximum) in July. The record low temperature for Region IV is 5°F and record high of 115°F.

The annual rainfall in the eastern portion of Region IV is approximately 27 inches while the average in the western portion is approximately 19 inches. Rainfall occurs primarily in the spring and fall months. As noted earlier, winds are mostly prevailing sea breezes from the south. A wind rose is shown in Figure 8 and depicts this condition. The upper air vertical mixing depth is shown in Table 7.

The major natural resources are the widespread crude oil and natural gas deposits, fertile soil in the eastern portion of the region, substantial sand and gravel deposits in the central portion and abundant sea food products along the coast. The soil in the western portion of the region is generally poor with a high alkaline content. The soil in the eastern portion consists of a high percentage of silt and clay. Irrigation in the eastern portion has played an important role in developing the agricultural industry.

Agriculture is, of course, of primary importance in the eastern portion of the region with emphasis placed on citrus fruits, vegetables, cotton and sorghums. Sugar cane is expected to become an important product replacing cotton in much of this area. Livestock (chiefly cattle) is the major economic activity in the western portion of the region.

Oil and gas exploration is at a minimum at the present time throughout the region. However, continual slow exploitation of natural gas and crude oil deposits is expected. Commercial fishing and shrimping is a large contribution to the economy of the area adjacent to the Gulf Coast. Tourism in the eastern and central portion has a substantial impact on the economy during the winter months.

Only moderate economic growth is predicted for Region IV,

Figure 8 - Region 4 Wind Rose
Annual Percentages

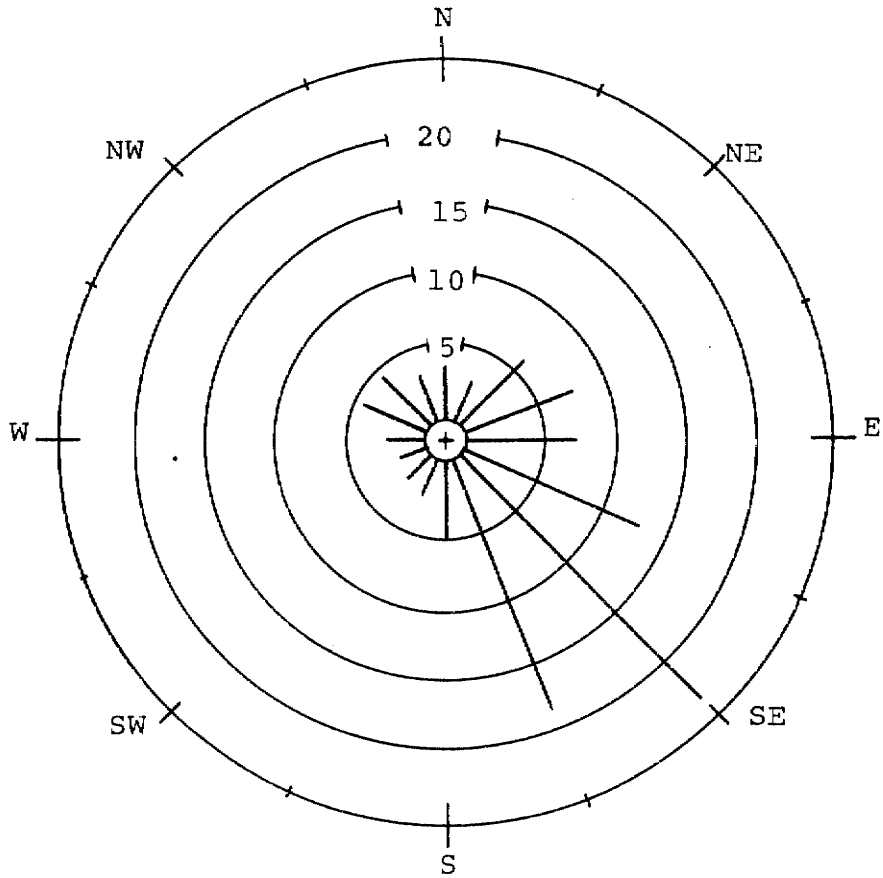

TABLE 7

REGION 4

ESTIMATES OF MEAN MAXIMUM MIXING DEPTHS (FEET ABOVE SURFACE)

Jan.	Feb.	Mar.	Apr.	May	June	July	Aug.	Sep.	Oct.	Nov.	Dec.
2100	2720	2620	2890	3180	3970	4200	4490	4070	3940	2920	1940

with no expectation of an influx of heavy industry. Economic factors indicate a steady increase in light industry in the eastern portion of the region which has access to port facilities. Much of the present industry is - and new industry is expected to be - associated with ore processing.

Commercial fishing is expected to expand during the next several years and tourism, especially in Laredo (Webb County) and Brownsville (Cameron County) is expected to increase. Both of these cities have International border crossings into Mexico.

b. Demography

The 1970 National Census indicates an average population density of 45 persons per square mile for the entire region. The extreme density figures range from 159 in Cameron County to 4 in Jim Hogg and Zapata counties. The total population for the region, as shown in Table 8, is 437,045. Approximately 74% of the population is concentrated in the two counties of Cameron and Hidalgo.

Population predictions for Region IV vary, but all sources agree a slight increase during the next several years can be expected. Population will increase in the urban areas of Cameron, Webb, and Hidalgo counties and decrease or remain stable in the rural areas. No rapid growth in any one area is anticipated.

Because of the population increase in the metropolitan areas, vehicular traffic, with resultant vehicular emissions, is expected to increase; however, there are no single points of concentration within these areas that are expected to cause pollution levels that cannot be controlled by enforcement of state regulations. No photochemical smog is expected in any of the metropolitan areas in the region due to the favorable inversion frequency and duration.

c. Industrial Development

No factors at present indicate significant trends in industrial development. Laredo is expected to be a site for slow development of light industry. The Brownsville port area is developing more rapidly. Industries presently located at or near the port include a large petrochemical plant, five ore processing plants, three boat repair facilities, several seafood processing plants, a major grain handling facility, and a large metals salvage yard. Three new sites are presently being constructed, including two large metal salvaging yards and an offshore drilling rig construction plant. Within the

TABLE 8

REGION 4 DEMOGRAPHIC STATISTICS

County	1970 Census	Area in Square Miles	Density
Cameron	140,368	883	159
Hidalgo	181,535	1,541	118
Jim Hogg	4,654	1,143	4
Starr	17,707	1,207	15
Webb	72,859	3,293	22
Willacy	15,570	595	26
Zapata	4,352	1,000	4
Total	437,045	9,662	

$$\text{Average Population Density} = \frac{437,045}{9,662} = 45$$

vicinity, although on the Mexican side of the Rio Grande River, the construction of at least two new ore processing plants has been announced.

It should be noted that industry on the Mexican side of the Rio Grande is increasing, with this increase to continue. These industries contribute to ambient loading on the Texas side of the border.

The four small brick plants in the region are still in operation; however, these plants find it hard to compete with brick plants on the Mexican side. Total brick production is expected to increase on the Mexican side, with the possibility of contributing to ambient particle loadings on the Texas side.

Cotton processing and cotton ginning operations are expected to decrease in the region over the next several years due to economic factors.

It is believed that all new industries were in compliance when they began operations, with the possible exception of one sand and foundry business. Their flourspar pelletizing plant has occasional periods of emissions that probably exceed the allowable. Some control equipment has been installed pending arrival of new equipment. Except for cotton gins, which have occasional fires, most of the violations occur from sources that are not usual industrial processes. One of the most frequent violations is the open burning of refuse by cities themselves. The frequency of these violations has decreased but still occur with enough frequency to require constant surveillance.

Only six variances have been issued in the entire region. Almost all industries have complied without variances being granted. Regulations affecting agricultural plants and portable hot-mix asphaltic batching plants are expected to reduce particulate emissions in the future. No substantial reduction of particulate emissions is expected in the Laredo area. The majority of the dust particles are borne naturally by winds or are created by automobile traffic on unpaved streets.

5. Region V

Region V is composed of 18 counties covering 16,475 square miles. As shown in Figure 9, the region is bounded on the north by Regions III, VII, and IX, on the east by Region VII and the Gulf of Mexico, on the south by Region IV, and on the west by Regions IV and IX.

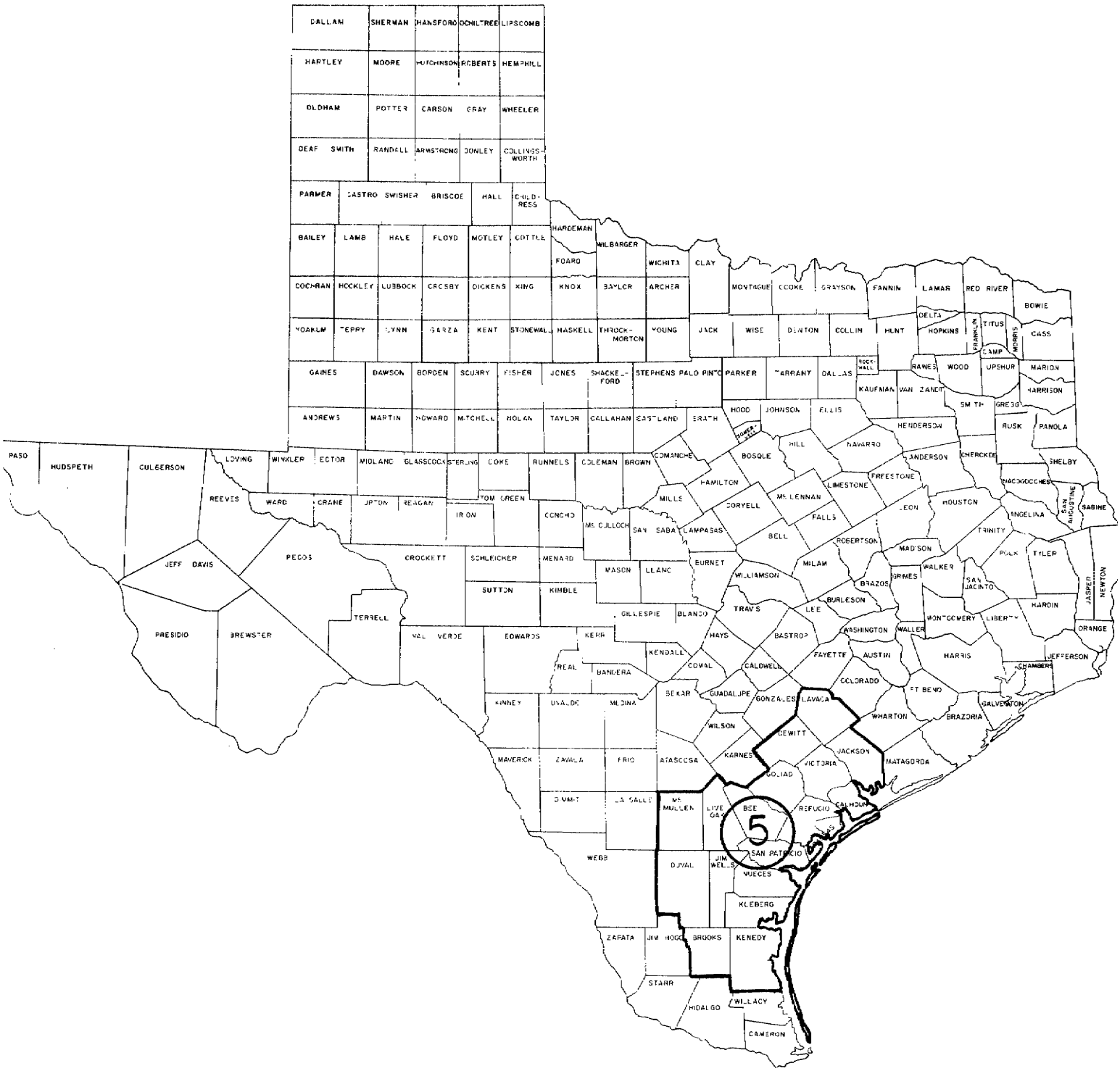
DALLAM
SHERMAN
HANSFORD
OCHILTREE
LIPSCOMB
HARTLEY
MOORE
HUTCHINSON
ROBERTS
HEMPHILL
OLDHAM
POTTER
CARSON
GRAY
WHEELER
DEAF SMITH
RANDALL
ARMSTRONG
DONLEY
COLLINGSWORTH
PARMER
CASTRO
SWISHER
BRISCOE
HALL
CHILDRESS
BAILEY
LAMB
HALE
FLOYD
MOTLEY
COTTLE
HARDEMAN
FOARD
WILBARGER
WICHITA
CLAY
COCHRAN
HOCKLEY
LUBBOCK
CROSBY
DICKENS
KING
KNOX
BAYLOR
ARCHER
MONTAGUE
COOKE
GRAYSON
FANNIN
LAMAR
RED RIVER
BOWIE
YOAKUM
TERRY
LYNN
GARZA
KENT
STONEWALL
HASKELL
THROCKMORTON
YOUNG
JACK
WISE
DENTON
COLLIN
HUNT
DELTA
HOPKINS
FRANKLIN
TITUS
MORRIS
CASS
CAMP
GAINES
DAWSON
BORDEN
SCURRY
FISHER
JONES
SHACKELFORD
STEPHENS
PALO PINTO
PARKER
TARRANT
DALLAS
ROCKWALL
RAINES
WOOD
UPSHUR
MARION
KAUFMAN
VAN ZANDT
HARRISON
ANDREWS
MARTIN
HOWARD
MITCHELL
NOLAN
TAYLOR
CALLAHAN
EASTLAND
ERATH
HOOD
JOHNSON
ELLIS
SMITH
GREGG
HENDERSON
RUSK
PANOLA
PECOS
HUDSPETH
CULBERSON
LOVING
WINKLER
ECTOR
MIDLAND
GLASSCOCK
STERLING
COKE
RUNNELS
COLEMAN
BROWN
COMANCHE
BOSQUE
HILL
NAVARRO
ANDERSON
CHEROKEE
SHELBY
REEVES
WARD
CRANE
UPTON
REAGAN
IRON
TOM GREEN
CONCHO
MILLS
HAMILTON
CORYELL
MCLENNAN
LIMESTONE
FREESTONE
NACOGDOCHES
SAN AUGUSTINE
SABINE
MCCULLOCH
SAN SABA
LAMPASAS
BELL
FALLS
LEON
HOUSTON
ANGELINA
TRINITY
ROBERTSON
MADISON
POLK
TYLER
JEFF DAVIS
CROCKETT
SCHLEICHER
MENARD
MASON
LLANO
BURNET
WILLIAMSON
MILAM
BRAZOS
GRIMES
WALKER
SAN JACINTO
JASPER
NEWTON
SUTTON
KIMBLE
BURLESON
TERRELL
GILLESPIE
BLANCO
TRAVIS
LEE
HARDIN
MONTGOMERY
LIBERTY
PRESIDIO
BREWSTER
VAL VERDE
EDWARDS
KERR
HAYS
BASTROP
WASHINGTON
WALLER
ORANGE
KENDALL
FAYETTE
AUSTIN
HARRIS
JEFFERSON
REAL
BANDERA
COMAL
CALDWELL
CHAMBERS
COLORADO
FT BEND
KINNEY
UVALDE
MEDINA
BEXAR
GUADALUPE
GONZALES
LAVACA
GALVESTON
WILSON
WHARTON
BRAZORIA
DEWITT
MAVERICK
ZAVALA
FRIO
ATASCOSA
KARNES
JACKSON
VICTORIA
MATAGORDA
GOLIAD
DIMMIT
LA SALLE
MCMULLEN
LIVE OAK
BEE
REFUGIO
CALHOUN
5
WEBB
DUVAL
JIM WELLS
SAN PATRICIO
NUECES
KLEBERG
ZAPATA
JIM HOGG
BROOKS
KENEDY
STARR
HIDALGO
WILLACY
CAMERON

Figure 9

a. Geography and Climate

Almost the entire region consists of coastal plains, forming what is known generally as the Gulf Coastal Bend. The northwestern part of the area becomes rolling hills. The southern portion is extremely flat, broken only by the remnants of aging inland sand dunes. A small westernmost area is in the edge of the Nueces Plain separated from the coastal plain by the little known Bordas-Reynosa-Oakville escarpment. The axis of the escarpment is oriented in a northeast- southwest direction.

The region rises in altitude from the coastal plains at sea level to approximately 250 feet in the northern sector.

The climate is mild and humid along the coast becoming somewhat cooler and less humid in the western and northern portion. The temperature ranges from 46°F (mean minimum) in January to 95°F (mean maximum) in July. The record low temperature for the region is 2°F, and the record high temperature is 112°F.

The highest average annual rainfall occurs in Jackson County, which has 37.88 inches, while the lowest occurs in Duval County with 23.15 inches. A wind rose, based on information obtained in Corpus Christi, is shown in Figure 10. During the spring months a great deal of dust created by windy conditions occurs in the central area where a high percentage of the land is utilized for row crops. This is true for the northern portion to a lesser degree. The upper air vertical mixing depth is shown in Table 9.

The major natural resources in Region V consist of crude oil and natural gas deposits throughout the area, rich soil suitable for agricultural pursuits in the central area; substantial sand, gravel and caliche deposits; an unknown amount of uranium deposits, and abundant marine life in shallow, warm bays.

The soil is generally alkaline but is considered rich and productive along the coastal plains. Fertile soil is also found in the southern and northern areas. The western area of the region has poorer soil in addition to insufficient rainfall for abundant agricultural activity.

The major economic activity in the region is the extensive and widespread production of oil and gas. This has been a major part of the economic basis since the 1930's. Because of depletion of known reserves and a decrease in exploration

Figure 10- Region 5 Wind Rose
Annual Percentages

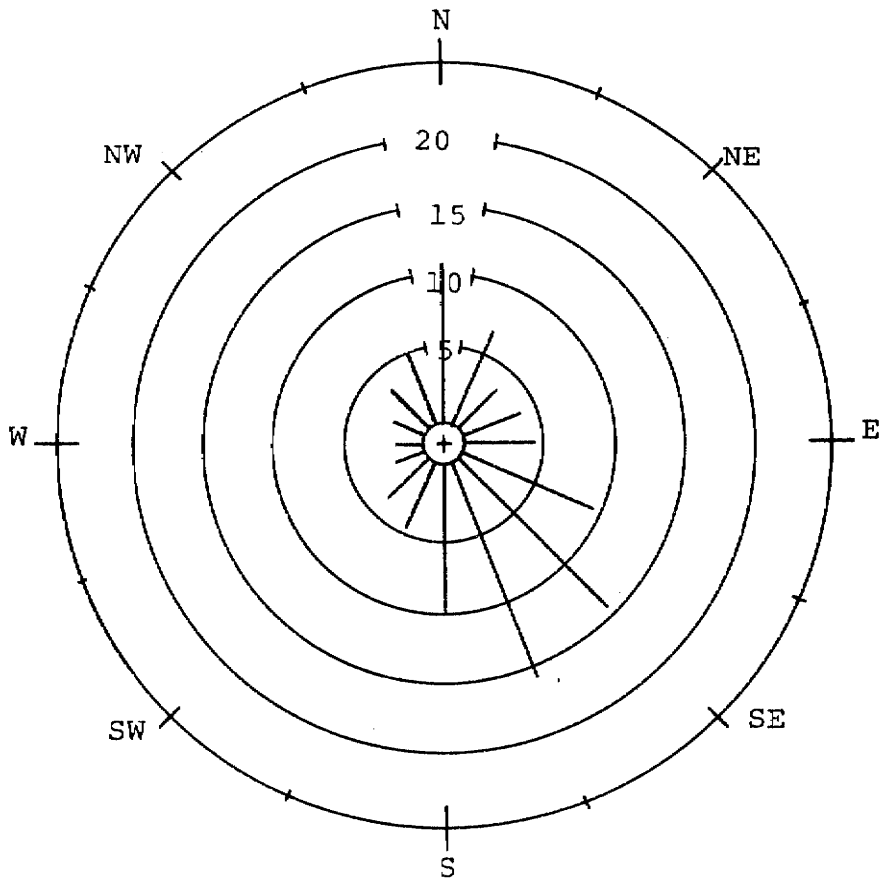

TABLE 9

REGION 5

ESTIMATES OF MEAN MAXIMUM MIXING DEPTHS (FEET ABOVE SURFACE)

Jan.	Feb.	Mar.	Apr.	May	June	July	Aug.	Sep.	Oct.	Nov.	Dec.
1840	2620	2620	3120	3280	3940	4270	4590	4100	3940	2690	1940

in recent years, oil and gas is expected to play a decreasing role in the area's economy.

Agriculture has been and is a major contributor to the economy in the central portion of the region. Chief products of this area are cotton and sorghum grain. Some vegetable farming is done in the western portion of the region. Livestock production is very important in the entire region. Heavy industry in the Corpus Christi area is the major activity in that part of the region. These industries include smelting of non-ferrous ores, inorganic and organic chemicals, oil refining, petrochemicals, and cement. Many support industries, geared to supplying goods and services to the larger industries, are located in the Corpus Christi area. Commercial fishing and shrimping in the Corpus Christi, Aransas Pass, and Port Lavaca areas are gaining importance.

Moderate economic growth is predicted for Region V with the greatest increase in the Corpus Christi (Nueces County) area and along the Gulf Coast.

b. Demography

Region V has a total population of 546,364 people. According to the 1970 census the region has a population density of 33 people per square mile. The extreme density figures range from 283 in Nueces County to 0.5 in Kenedy County. The major concentration is in the Corpus Christi area and adjacent to San Patricio County which has several smaller cities in close proximity. Nueces and San Patricio Counties are the only Standard Metropolitan areas in the region. Victoria and Kingsville are the only cities in the region with populations in the 25,000 to 50,000 bracket. Other cities range downward in population with an average of approximately 4,000. Region V population is shown in Table 10.

Generally, the population in the rural areas and smaller cities is remaining stable or decreasing. The population in the larger cities and their suburbs is increasing, but not at any great rate.

It can be expected that there will be slight increases in hydrocarbons and particulate pollution in the areas of increasing population due to automobile traffic and automobile emissions. This problem is not overly serious because no great rise in population is expected.

TABLE 10

REGION 5 DEMOGRAPHIC STATISTICS

County	1970 Census	Area in Square Miles	Density
Aransas	8,902	276	32
Bee	22,737	842	27
Brooks	8,005	904	9
Calhoun	17,831	536	33
DeWitt	18,660	910	20
Duval	11,722	1,814	6
Goliad	4,869	871	5
Jackson	12,975	854	15
Jim Wells	33,032	846	39
Kenedy	678	1,407	.5
Kleberg	33,166	850	39
Lavaca	17,903	975	18
Live Oak	6,697	1,051	6
McMullen	1,095	1,157	.9
Nueces	237,544	838	283
Refugio	9,494	771	12
San Patricio	47,288	680	69
Victoria	53,766	893	60
Total	546,364	16,475	

$$\text{Average Population Density} = \frac{546,364}{16,475} = 33$$

c. Industrial Development

In Region V the major industries are agriculture, petroleum and natural gas production, ore smelting, ore processing and commercial fishing. There are many light industries in the urban and metropolitan areas supporting these major activities. Tourism is a growing economic factor.

During the 1969-1970 period, the Corpus Christi area experienced a slight loss in industrial processes. This was due partly to a natural disaster and partly to economics of operation. The only suggested trend in the Corpus Christi area is toward an increase in industrial processes. Light industry, which usually constitutes no pollution problem, is increasing in the urban areas.

Only one major industry has begun operation since current regulations became effective without being in compliance with emission standards. This industry includes two processes which involve petroleum coking and sulfur recovery. The two processes are on the same property and in the Corpus Christi area.

The major industries in the Corpus Christi area, as well as those throughout the region, are in compliance with Texas Air Control Board regulations or are under Board order to achieve compliance with the regulations. Two of the largest plants, each of which include alumina and aluminum processes, emit extremely large amounts of pollutants. Because of vast acreage involved and distances to property lines, neither of these plants have been found to be substantially in violation of the regulations. Variances to only 11 companies have been granted in Region V. Obviously, the majority of companies achieved compliance voluntarily without variances or litigation. All Variances that were granted have expired at this time.

6. Region VI

Region VI is composed of 30 counties covering 38,794 square miles in the western plains of Texas. As shown in Figure 11, the region is bounded on the north by Regions I and II, on the south by Region IX and on the west by Region XI and the state of New Mexico.

a. Geography and Climate

The major portion of Region VI is the lower extension of the Great Plains of North America. The area is primarily featureless, with little natural vegetation. Mountainous terrain is found along the western boundary, and the southeastern area is a portion of the Edwards Plateau bordering on the Texas Hill Country. The region rises in elevation from approximately 1200 feet in the southeast to almost 3,000 feet in the northwest.

The climate is usually pleasant, with a temperature range of 31°F (mean minimum) in January to 95° (mean maximum) in July. Temperature can vary greatly during a 24-hour period, which is characteristic of the Great Plains. Rapid temperature changes occur primarily from arctic air masses sweeping down the Great Plains. Temperature drops of 20°F in less than one half hour are not unusual. Periods of intense cold or heat are generally of short duration.

The annual rainfall in Region VI ranges from 10 to 27 inches, with an average of approximately 16 inches per year. Sand storms do occur in the region as the result of high northwesterly winds. These sand storms affect air quality but they are generally of short duration, and the blowing particles are large and settle rapidly. A wind rose is shown in Figure 12. An upper air vertical mixing depth is shown in Table 11.

The major natural resources in Region VI are the fertile soil in the Pecos River Valley to the west, underground water in the southeast on the Edwards Plateau, and extremely large deposits of petroleum throughout the western and central portions of the region. Petroleum is by far the dominant resource in the area.

The soils range from coarse sand and alkaline salt beds in the west to sandy loam in the southeast. Almost three-fourths of the region is range land; however, dry cultivation and irrigation are widespread.

The major economic activities in Region VI are the petroleum industry and sheep and goat production. Minor activities include agriculture, cement manufacturing and the processing of building materials.

There are no significant trends in economic growth for the region. Growth has been moderate, with no expectation of any industrial influx or change. Small businesses providing support for the petroleum industry are expected to increase.

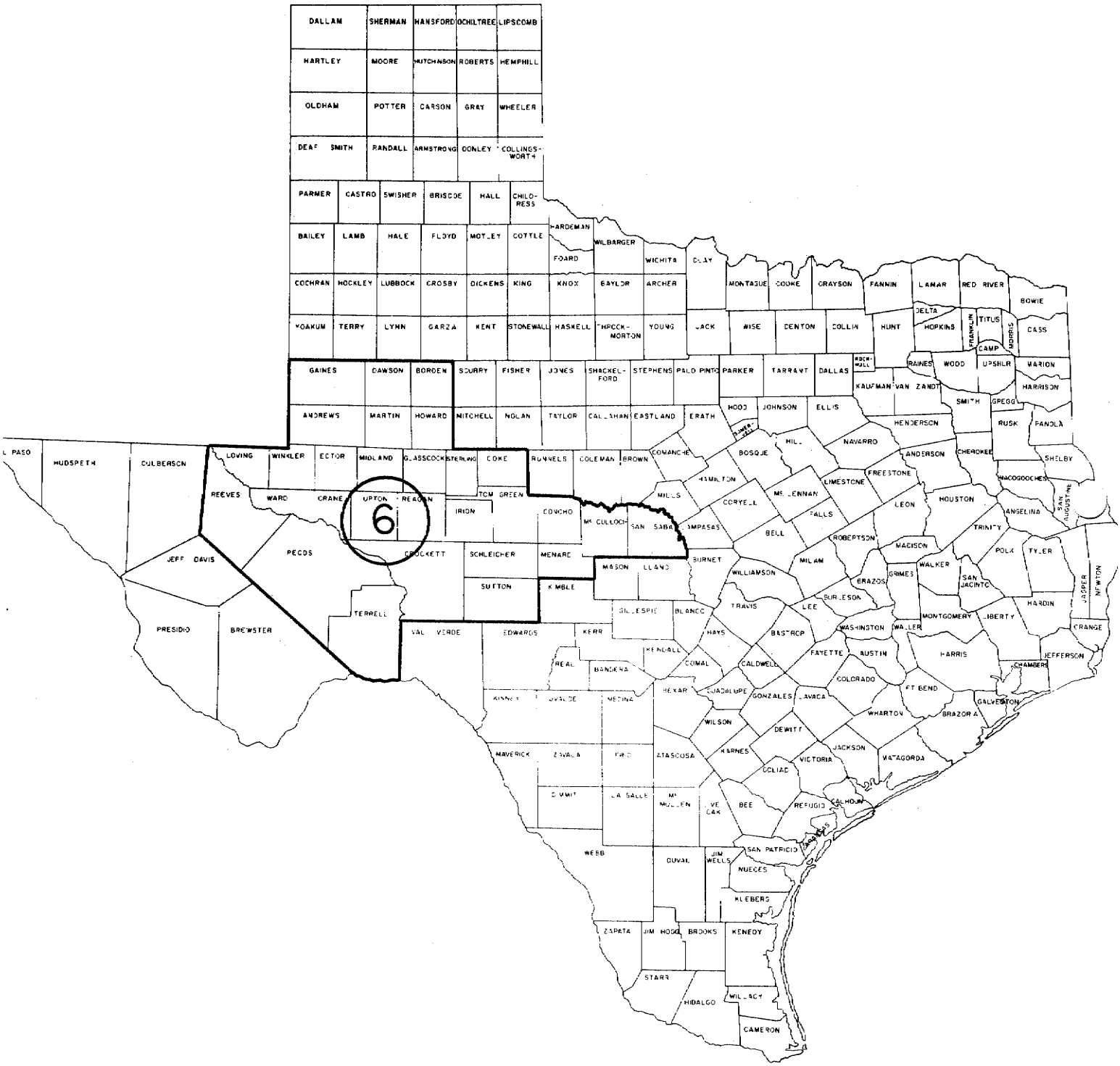
DALLAM
SHERMAN
HANSFORD
OCHILTREE
LIPSCOMB
HARTLEY
MOORE
HUTCHINSON
ROBERTS
HEMPHILL
OLDHAM
POTTER
CARSON
GRAY
WHEELER
DEAF SMITH
RANDALL
ARMSTRONG
DONLEY
COLLINGSWORTH
PARMER
CASTRO
SWISHER
BRISCOE
HALL
CHILDRESS
BAILEY
LAMB
HALE
FLOYD
MOTLEY
COTTLE
HARDEMAN
FOARD
WILBARGER
WICHITA
CLAY
COCHRAN
HOCKLEY
LUBBOCK
CROSBY
DICKENS
KING
KNOX
BAYLOR
ARCHER
MONTAGUE
COOKE
GRAYSON
FANNIN
LAMAR
RED RIVER
BOWIE
YOAKUM
TERRY
LYNN
GARZA
KENT
STONEWALL
HASKELL
THROCKMORTON
YOUNG
JACK
WISE
DENTON
COLLIN
HUNT
DELTA
HOPKINS
FRANKLIN
TITUS
MORRIS
CASS
CAMP
GAINES
DAWSON
BORDEN
SCURRY
FISHER
JONES
SHACKELFORD
STEPHENS
PALO PINTO
PARKER
TARRANT
DALLAS
ROCKWALL
RAINES
WOOD
UPSHUR
MARION
KAUFMAN
VAN ZANDT
HARRISON
ANDREWS
MARTIN
HOWARD
MITCHELL
NOLAN
TAYLOR
CALLAHAN
EASTLAND
ERATH
HOOD
JOHNSON
ELLIS
SMITH
GREGG
HENDERSON
RUSK
PANOLA
EL PASO
HUDSPETH
CULBERSON
LOVING
WINKLER
ECTOR
MIDLAND
GLASSCOCK
STERLING
COKE
RUNNELS
COLEMAN
BROWN
COMANCHE
BOSQUE
HILL
NAVARRO
ANDERSON
CHEROKEE
SHELBY
NACOGDOCHES
REEVES
WARD
CRANE
UPTON
REAGAN
IRION
TOM GREEN
CONCHO
McCULLOCH
SAN SABA
MILLS
HAMILTON
CORYELL
McLENNAN
LIMESTONE
FREESTONE
FALLS
LEON
HOUSTON
ANGELINA
SAN AUGUSTINE
TRINITY
6
JEFF DAVIS
PECOS
CROCKETT
SCHLEICHER
MENARD
MASON
LLANO
BURNET
BELL
ROBERTSON
MADISON
POLK
TYLER
MILAM
WILLIAMSON
BRAZOS
GRIMES
WALKER
SAN JACINTO
JASPER
NEWTON
SUTTON
KIMBLE
BURLESON
LEE
TRAVIS
GILLESPIE
BLANCO
HARDIN
PRESIDIO
BREWSTER
TERRELL
VAL VERDE
EDWARDS
KERR
HAYS
BASTROP
WASHINGTON
WALLER
MONTGOMERY
LIBERTY
ORANGE
KENDALL
FAYETTE
AUSTIN
HARRIS
JEFFERSON
REAL
BANDERA
COMAL
CALDWELL
COLORADO
CHAMBERS
KINNEY
UVALDE
MEDINA
BEXAR
GUADALUPE
GONZALES
LAVACA
FT BEND
GALVESTON
WILSON
DEWITT
WHARTON
BRAZORIA
MAVERICK
ZAVALA
FRIO
ATASCOSA
KARNES
JACKSON
VICTORIA
MATAGORDA
DIMMIT
LA SALLE
McMULLEN
LIVE OAK
BEE
GOLIAD
REFUGIO
CALHOUN
WEBB
DUVAL
JIM WELLS
SAN PATRICIO
NUECES
KLEBERG
ZAPATA
JIM HOGG
BROOKS
KENEDY
STARR
HIDALGO
WILLACY
CAMERON

Figure 11

Figure 12- Region 6 Wind Rose
Annual Percentages

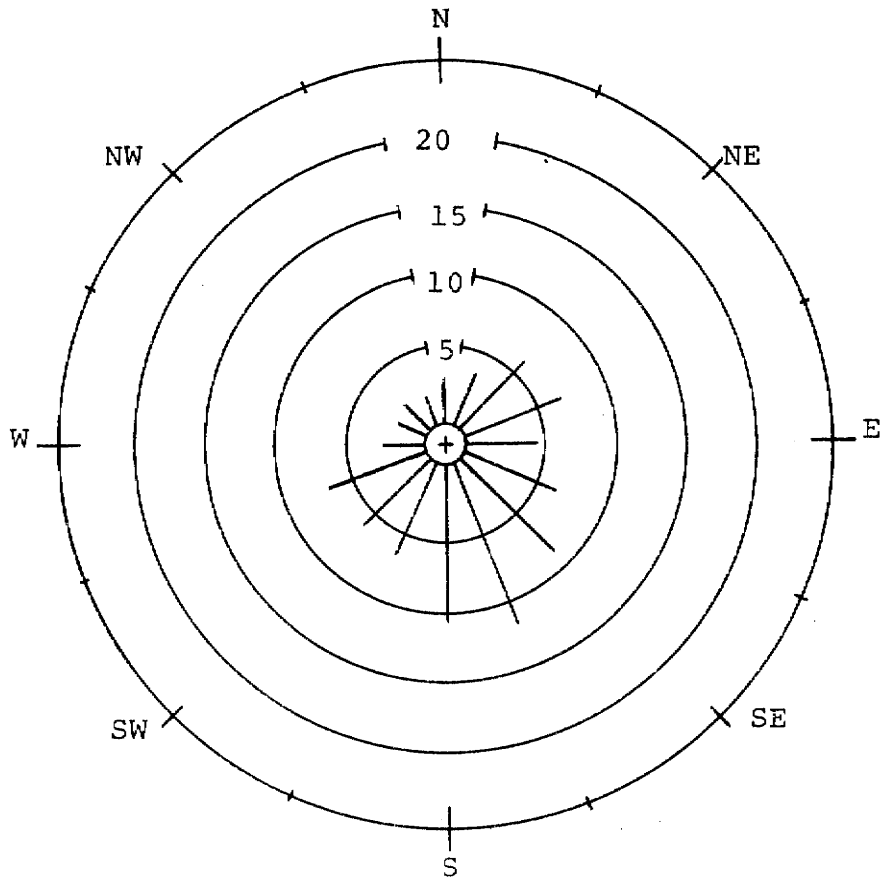

TABLE 11

REGION 6

ESTIMATES OF MEAN MAXIMUM MIXING DEPTHS (FEET ABOVE SURFACE)

Jan.	Feb.	Mar.	Apr.	May	June	July	Aug.	Sep.	Oct.	Nov.	Dec.
1970	2950	3770	4360	4920	6230	7220	7870	5090	3670	2890	1640

b. Demography

According to the 1970 census, the region's overall population density is 11 people per square mile. Of the 412,856 people residing within this region, 262,288 (as shown in Table 12) are concentrated in Ector, Midland, Howard, and Tom Greene counties. This amounts to approximately 64% of the total population. The remainder of the population is evenly distributed throughout the region. Population density in the south is slightly less than the density found in the north. There are very few problems normally associated with high population density areas.

Population estimates for the region vary but it would be reasonable to expect a slight population increase in the region. Most of the region showed a slight decrease in population (1970). This decrease was due to the transferring of personnel by major oil companies in most cases. It appears that this practice has stabilized and a slight growth should be experienced in the future. Regulations should be sufficient to control the problems arising from population concentration in Region VI.

c. Industrial Development

The major industries in Region VI are related to the petroleum industry and the raising of sheep and goats. The Edwards Plateau area has extensive cattle, sheep and goats and leads the nation in angora and mohair production. This area also ranks among the leaders in sheep raising and wool production. Cotton raising and processing is concentrated on the north side of the region.

Minor industries include agriculture, cement manufacture, and processing of building materials. There have been no significant trends in industrial changes within the region. One channel-process carbon black plant (Ector County) did shut down operations during June of 1971, leaving only one other channel-process plant (Gaines County) in the region.

According to the best information available all new plants have been in compliance when operations were started.

TABLE 12

REGION 6 DEMOGRAPHIC STATISTICS

County	1970 Census	Area in Square Miles	Density
Andrews	10,372	1,504	6.8
Borden	888	908	1.0
Coke	3,087	911	3.4
Concho	2,937	1,004	2.9
Crane	4,172	796	5.2
Crockett	3,885	2,794	1.4
Dawson	16,604	899	18.5
Ector	91,805	907	100.4
Gaines	11,593	1,479	7.8
Glasscock	1,155	864	1.3
Howard	37,796	912	41.4
Irion	1,070	1,073	1.0
Loving	164	647	0.3
McCulloch	8,571	1,066	8.0
Martin	4,774	911	5.2
Menard	2,646	914	2.9
Midland	65,433	938	69.8
Pecos	13,748	4,736	2.9
Reagan	3,239	1,133	2.8
Reeves	16,526	2,600	6.4
San Saba	5,540	1,122	4.9
Schleicher	2,277	1,331	1.7
Sterling	1,056	914	1.2
Sutton	3,175	1,493	2.1
Terrell	1,940	2,388	0.8
Tom Green	71,047	1,534	46.3
Upton	4,697	1,312	3.6
Ward	13,019	827	15.7
Winkler	9,640	877	10.8
Total	412,856	38,794	

Average Population Density = $\frac{412,856}{38,794}$ = 10.64

7. Region VII

Region VII is composed of 13 counties with an area of 12,428 square miles. The region is located on the coastal plains in the southeastern part of the state. As shown in Figure 13, the region is bounded on the north by Regions III and X, on the east by Region X, on the south by the Gulf of Mexico, and on the west by Regions III and V.

a. Geography and Climate

The entire land area of Region VII is very flat, with no characteristic geomorphic features. Altitude varies from sea level on the coast to a maximum of 450 feet in Walker County in the north. The region encompasses the San Jacinto coastal basin and is drained by the Trinity, San Jacinto, Colorado, and Brazos Rivers and many minor tributaries.

The climate is typical of the southern coast being hot and humid. Temperatures range from 44°F (mean minimum) in January to 93°F (mean maximum) in July. Rapid temperature changes are rare.

The annual rainfall in Region VII averages 45 inches and occurs primarily in the spring and fall months. A wind rose is shown in Figure 14 and the upper air vertical mixing depth is given in Table 13.

The major natural resources are the fertile soil, abundant oil and natural gas deposits, abundant sea life and excellent access for ocean shipping.

A very strong economic growth is anticipated, with a continued increase in both heavy and light industry, shipping, commercial fishing and tourism. Approximately 2.4 billion dollars have been spent by 186 companies during the past six years to build new industrial plants or expand existing facilities in the Greater Houston Area. This region is one of the leading areas in the United States in economic growth.

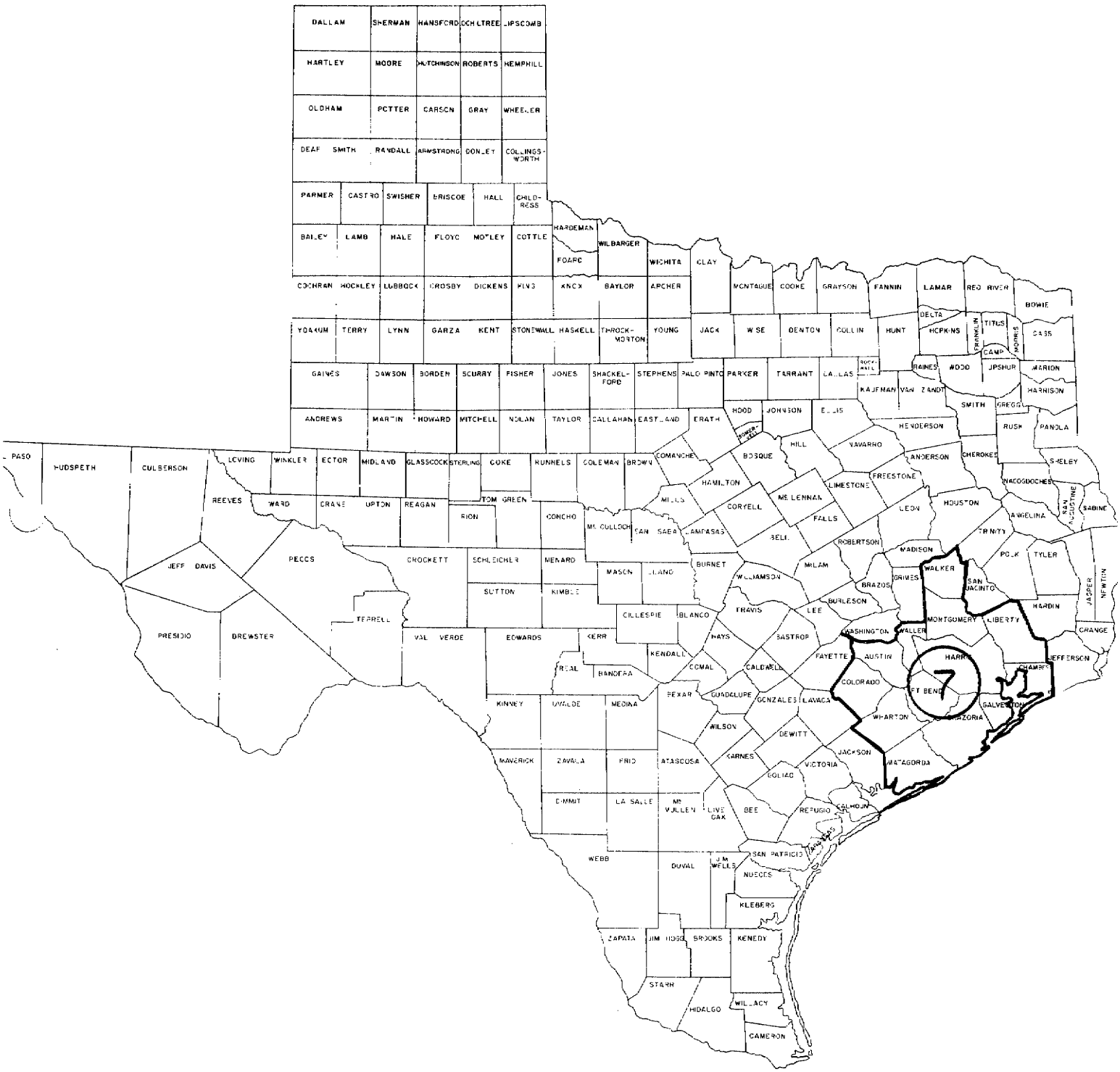
DALLAM
SHERMAN
HANSFORD
OCHILTREE
LIPSCOMB
HARTLEY
MOORE
HUTCHINSON
ROBERTS
HEMPHILL
OLDHAM
POTTER
CARSON
GRAY
WHEELER
DEAF SMITH
RANDALL
ARMSTRONG
DONLEY
COLLINGSWORTH
PARMER
CASTRO
SWISHER
BRISCOE
HALL
CHILDRESS
BAILEY
LAMB
HALE
FLOYD
MOTLEY
COTTLE
HARDEMAN
FOARD
WILBARGER
WICHITA
CLAY
COCHRAN
HOCKLEY
LUBBOCK
CROSBY
DICKENS
KING
KNOX
BAYLOR
ARCHER
MONTAGUE
COOKE
GRAYSON
FANNIN
LAMAR
RED RIVER
BOWIE
YOAKUM
TERRY
LYNN
GARZA
KENT
STONEWALL
HASKELL
THROCKMORTON
YOUNG
JACK
WISE
DENTON
COLLIN
HUNT
DELTA
HOPKINS
FRANKLIN
TITUS
MORRIS
CASS
CAMP
GAINES
DAWSON
BORDEN
SCURRY
FISHER
JONES
SHACKELFORD
STEPHENS
PALO PINTO
PARKER
TARRANT
DALLAS
ROCKWALL
RAINES
WOOD
UPSHUR
MARION
KAUFMAN
VAN ZANDT
HARRISON
ANDREWS
MARTIN
HOWARD
MITCHELL
NOLAN
TAYLOR
CALLAHAN
EASTLAND
ERATH
HOOD
JOHNSON
ELLIS
SMITH
GREGG
HENDERSON
RUSH
PANOLA
EL PASO
HUDSPETH
CULBERSON
LOVING
WINKLER
ECTOR
MIDLAND
GLASSCOCK
STERLING
COKE
RUNNELS
COLEMAN
BROWN
COMANCHE
BOSQUE
HILL
NAVARRO
ANDERSON
CHEROKEE
SHELBY
FREESTONE
LIMESTONE
NACOGDOCHES
REEVES
WARD
CRANE
UPTON
REAGAN
TOM GREEN
MILLS
HAMILTON
CORYELL
McLENNAN
LEON
HOUSTON
ANGELINA
SAN AUGUSTINE
SABINE
IRION
CONCHO
McCULLOCH
SAN SABA
LAMPASAS
BELL
FALLS
ROBERTSON
TRINITY
MADISON
POLK
TYLER
JEFF DAVIS
PECOS
CROCKETT
SCHLEICHER
MENARD
MASON
LLANO
BURNET
WILLIAMSON
MILAM
BRAZOS
GRIMES
WALKER
SAN JACINTO
JASPER
NEWTON
SUTTON
KIMBLE
BURLESON
TERRELL
GILLESPIE
BLANCO
TRAVIS
LEE
MONTGOMERY
LIBERTY
HARDIN
PRESIDIO
BREWSTER
VAL VERDE
EDWARDS
KERR
HAYS
BASTROP
WASHINGTON
WALLER
ORANGE
KENDALL
FAYETTE
AUSTIN
HARRIS
JEFFERSON
REAL
BANDERA
COMAL
CALDWELL
COLORADO
FT BEND
7
CHAMBERS
KINNEY
UVALDE
MEDINA
BEXAR
GUADALUPE
GONZALES
LAVACA
GALVESTON
WHARTON
BRAZORIA
WILSON
DEWITT
MAVERICK
ZAVALA
FRIO
ATASCOSA
KARNES
JACKSON
MATAGORDA
VICTORIA
GOLIAD
DIMMIT
LA SALLE
McMULLEN
LIVE OAK
BEE
REFUGIO
CALHOUN
WEBB
DUVAL
JIM WELLS
SAN PATRICIO
NUECES
KLEBERG
ZAPATA
JIM HOGG
BROOKS
KENEDY
STARR
HIDALGO
WILLACY
CAMERON

Figure 13

Figure 14 - Region 7 Wind Rose
Annual Percentages

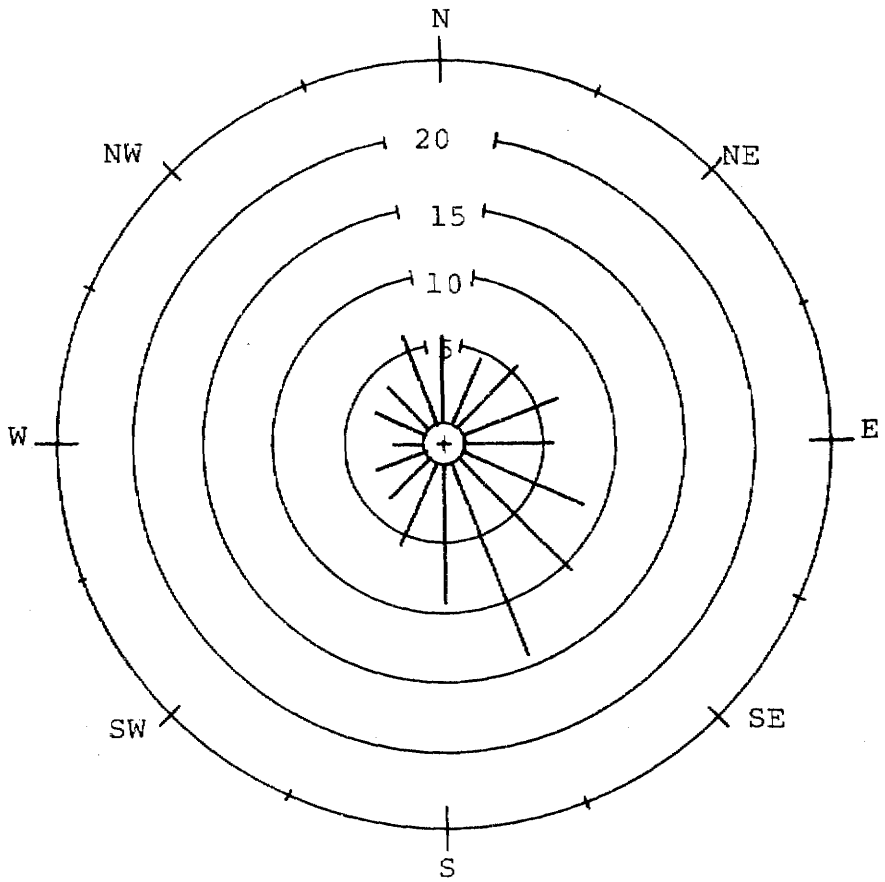

TABLE 13

REGION 7

ESTIMATES OF MEAN MAXIMUM MIXING DEPTHS (FEET ABOVE SURFACE)

Jan.	Feb.	Mar.	Apr.	May	June	July	Aug.	Sep.	Oct.	Nov.	Dec.
1640	2490	2790	3350	3770	4270	4590	4590	4270	4000	2760	1900

b. Demography

According to the 1970 census, Region VII has a population of 2,305,106 people. The population density of 185 people per square mile is the greatest of any region in the State. Population, area and density by county are shown in Table 14. As noted in this table, Harris County has the highest population, accounting for almost 76% of the people. Adjoining Galveston County has a population of 169,812 people, which makes the Houston-Galveston area the most highly populated in the State. Houston's population increased 38% during the 1960's, which was the fastest rate of growth of any of the nation's 10 largest cities. It is estimated that the largest future growth will probably be near the industrial complexes of Harris, Galveston, Chambers, and Brazoria counties. The Greater Houston Area consists of Harris County and the seven counties surrounding it (Brazoria, Chambers, Fort Bend, Galveston, Liberty, Montgomery, and Waller Counties), an area of 7,811 square miles with a population of 2,181,315 and a population density of 279. The Greater Houston population is projected to grow to five million by 1990 and to nine million by 2020. The projected employment in this area is compared with 1968 employment:

1968	1990	2000	2020
785,000	1,576,600	2,026,600	3,156,200

This industrial expansion, with its attendant increase in jobs, will cause an increase in industrial and in vehicular emissions problems. Vehicular registration (passenger automobiles) in 1972 was 1,018,274 for Harris and Galveston Counties, compared to 904,402 in 1970, an increase of over 5½% a year.

c. Industrial Development

The major industries in Region VII are chemical, oil

TABLE 14

REGION 7 DEMOGRAPHIC STATISTICS

County	1970 Census	Area in Square Miles	Density
Austin	13,831	662	20.9
Brazoria	108,312	1,422	76.2
Chambers	12,187	617	19.8
Colorado	17,638	950	18.6
Fort Bend	52,314	862	60.7
Galveston	169,812	429	395.8
Harris	1,741,912	1,711	1,018.1
Liberty	33,014	1,173	28.1
Matagorda	27,913	1,140	24.5
Montgomery	49,479	1,090	45.4
Walker	27,680	786	35.2
Waller	14,285	507	28.2
Wharton	36,729	1,079	34.0
Total	2,305,106	12,428	

$$\text{Average Population Density} = \frac{2,305,106}{12,428} = 185.47$$

refining, primary and fabricated metal, machinery manufacture, aerospace, and food products. The major new plants and expansions were in chemicals, fabricated metals, and machinery. The only significant industrial decrease in the region has been a reduction in the number of sawmills.

Agricultural activities are primarily concerned with cotton, rice, timber, and soybeans. The average growing season is very favorable at 282 days.

Industrial activities are generally centered in Harris County along the important Houston Ship Channel. Additional important centers are in Texas City and Freeport. Plant expansion and new plant facilities in the region cost $425 million in 1969 and $600 million in 1970. In 1969, there were 75 new plants and 157 expansions. In 1970 there were 62 new plants and 94 expansions. The major new plants and expansions were in chemical and related products, fabricated metals, and machinery manufacture.

Because of this tremendous industrial growth and dense population, overall air quality will be greatly affected if Texas Air Control Board Regulations are not enforced. The major air pollution problems will be due largely to vehicular emissions, petrochemical, and the primary and secondary metal industries.

All new industries were generally in compliance with existing state regulations, with some exceptions. Those companies that have expanded operations are also in compliance, with a few limited exceptions. Generally, most industries in Region VII have voluntarily complied with the State Regulations.

8. Region VIII

Region VIII consists of 19 counties covering 15,362 square miles in the north central sector of the State of Texas. As shown in figure 15, the region is bounded on the north by the Red River - the border between Texas and Oklahoma, on the east by Region XII, on the south by Region III, and on the west by Region I.

a. Geography and Climate

The western third of Region VIII is in the West Cross Timbers Subdivision. The terrain in this area is rough and broken consisting of many woody draws, brakes and rolling hills. The area is drained primarily by the Brazos, Paluxy, Trinity, and Red Rivers.

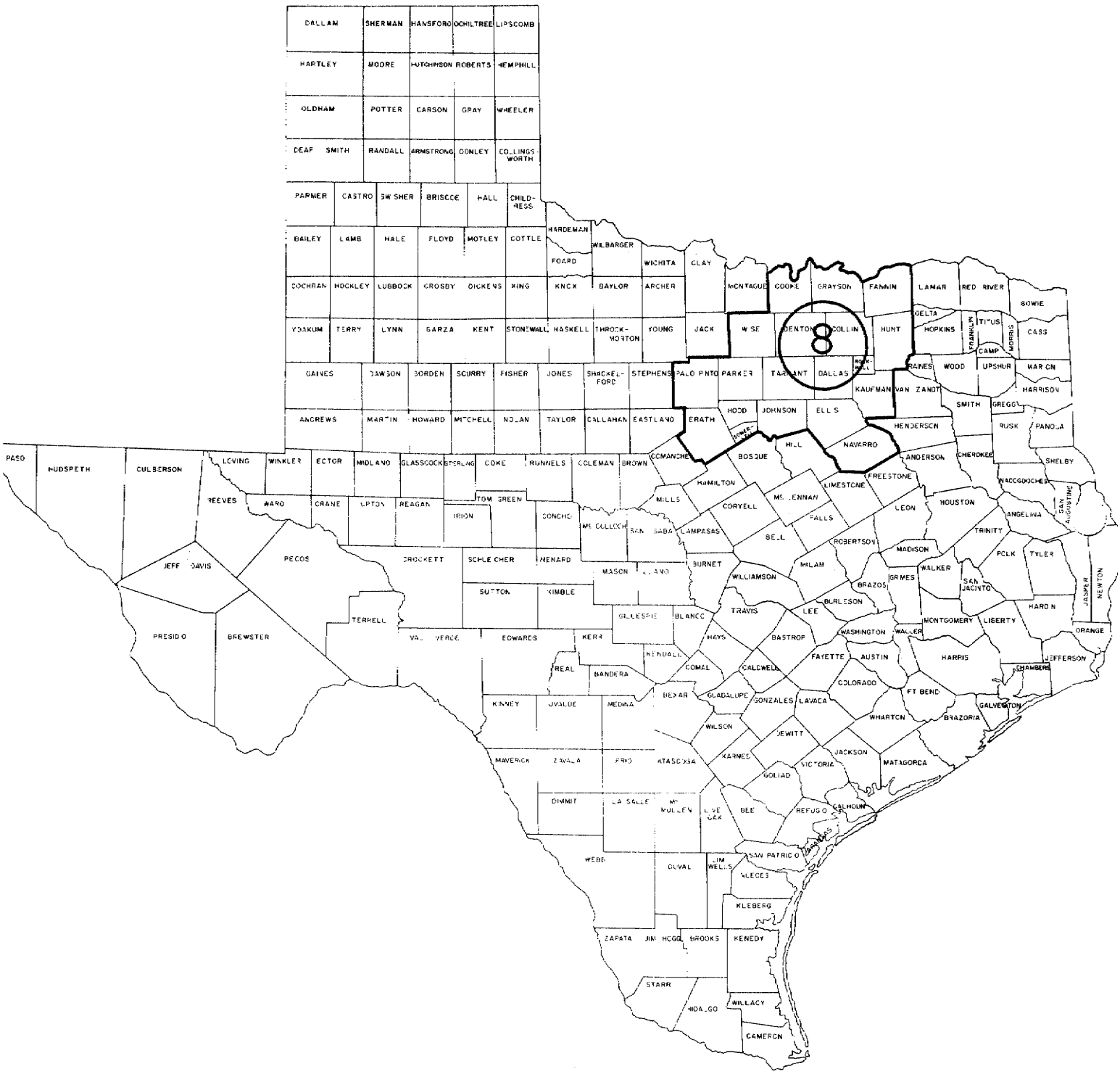
DALLAM
SHERMAN
HANSFORD
OCHILTREE
LIPSCOMB
HARTLEY
MOORE
HUTCHINSON
ROBERTS
HEMPHILL
OLDHAM
POTTER
CARSON
GRAY
WHEELER
DEAF SMITH
RANDALL
ARMSTRONG
DONLEY
COLLINGSWORTH
PARMER
CASTRO
SWISHER
BRISCOE
HALL
CHILDRESS
BAILEY
LAMB
HALE
FLOYD
MOTLEY
COTTLE
HARDEMAN
FOARD
WILBARGER
WICHITA
CLAY
COCHRAN
HOCKLEY
LUBBOCK
CROSBY
DICKENS
KING
KNOX
BAYLOR
ARCHER
MONTAGUE
COOKE
GRAYSON
FANNIN
LAMAR
RED RIVER
BOWIE
YOAKUM
TERRY
LYNN
GARZA
KENT
STONEWALL
HASKELL
THROCKMORTON
YOUNG
JACK
WISE
DENTON
COLLIN
HUNT
DELTA
HOPKINS
FRANKLIN
TITUS
MORRIS
CASS
CAMP
GAINES
DAWSON
BORDEN
SCURRY
FISHER
JONES
SHACKELFORD
STEPHENS
PALO PINTO
PARKER
TARRANT
DALLAS
ROCKWALL
RAINES
WOOD
UPSHUR
MARION
KAUFMAN
VAN ZANDT
HARRISON
ANDREWS
MARTIN
HOWARD
MITCHELL
NOLAN
TAYLOR
CALLAHAN
EASTLAND
ERATH
HOOD
JOHNSON
ELLIS
SMITH
GREGG
HENDERSON
RUSK
PANOLA
PECOS
HUDSPETH
CULBERSON
LOVING
WINKLER
ECTOR
MIDLAND
GLASSCOCK
STERLING
COKE
RUNNELS
COLEMAN
BROWN
COMANCHE
BOSQUE
HILL
NAVARRO
ANDERSON
CHEROKEE
SHELBY
FREESTONE
LIMESTONE
NACOGDOCHES
REEVES
WARD
CRANE
UPTON
REAGAN
IRION
TOM GREEN
CONCHO
MILLS
HAMILTON
CORYELL
McLENNAN
FALLS
LEON
HOUSTON
ANGELINA
SAN AUGUSTINE
McCULLOCH
SAN SABA
LAMPASAS
BELL
ROBERTSON
MADISON
TRINITY
POLK
TYLER
JEFF DAVIS
CROCKETT
SCHLEICHER
MENARD
MASON
BURNET
MILAM
WALKER
SAN JACINTO
WILLIAMSON
BRAZOS
GRIMES
SUTTON
KIMBLE
BURLESON
LEE
HARDIN
JASPER
NEWTON
TERRELL
GILLESPIE
BLANCO
TRAVIS
MONTGOMERY
LIBERTY
PRESIDIO
BREWSTER
VAL VERDE
EDWARDS
KERR
HAYS
BASTROP
WASHINGTON
WALLER
ORANGE
KENDALL
REAL
BANDERA
COMAL
CALDWELL
FAYETTE
AUSTIN
HARRIS
JEFFERSON
CHAMBERS
COLORADO
FT BEND
KINNEY
UVALDE
MEDINA
BEXAR
GUADALUPE
GONZALES
LAVACA
GALVESTON
WHARTON
BRAZORIA
WILSON
DEWITT
JACKSON
MATAGORDA
MAVERICK
ZAVALA
FRIO
ATASCOSA
KARNES
VICTORIA
GOLIAD
DIMMIT
LA SALLE
McMULLEN
LIVE OAK
BEE
REFUGIO
CALHOUN
WEBB
DUVAL
JIM WELLS
SAN PATRICIO
NUECES
KLEBERG
ZAPATA
JIM HOGG
BROOKS
KENEDY
STARR
HIDALGO
WILLACY
CAMERON

Figure 15

The eastern two-thirds of the region is in the Grand Prairie, East Cross Timbers, Blacklands, and Post Oak subdivisions. The terrain is primarily rolling hills and prairies with many wooded streams which drain into the Brazos, Trinity, and Red rivers. Topographically the region rises gently from approximately 400 feet in the south east (Navarro County) to approximately 1,300 feet in the northwest. Minimum height in the region is 270 feet with a maximum of 1,750 feet.

The climate in Region VIII is usually mild and quite suitable for agriculture. The temperature ranges from 35°F (mean minimum) in January to 96°F (mean maximum) in July. The region does experience "cold fronts" as cold artic air moves down the Central Plains across Oklahoma and into North Central Texas. These periods of intense cold weather are usually very short in duration.

The annual rainfall is approximately 32 inches and occurs primarily during the months of April, May, June, September, and October. A wind rose is given in Figure 16 and an upper air vertical mixing depth chart is given in Table 15.

The chief natural resources of Region VIII are the fertile soil, oil and gas reservoirs. Crude oil production occurs within 10 counties in Region VIII, namely, Cooke, Denton, Erath, Grayson, Hunt, Kaufman, Navarro, Palo Pinto, Parker, and Wise. Sand, gravel, and stone are natural resources of economic importance in Collin, Cooke, Dallas, Denton, Ellis, Erath, Grayson, Johnson, Kaufman, Palo Pinto, Parker, Somervell, Tarrant, and Wise Counties. Clay is mined in Ellis, Palo Pinto, Parker, and Wise Counties. Cement is produced in Dallas, Ellis, and Tarrant Counties. Lime is produced in Johnson County.

Soil in the region is varied, with black "waxy" loam in the southeast, hard compact clays in the central area, to sand and red loams in the west. The western and central sectors have considerable range land, and cultivation is widespread in the central and eastern areas.

The major economic activities in Region VIII are many. In rural areas agricultural, petroleum, mineral mining and processing, and related industries are of chief economic importance. Cotton growing and processing, sorghums, wheat, fruits, peanuts, pecans, oats and hay growing, dairying, sheep, hogs, cattle, poultry, and horse raising are the primary agricultural activities and are widely distributed. The petroleum industry includes crude oil and natural gas production and pipeline

Figure 16- Region 8 Wind Rose
Annual Percentages

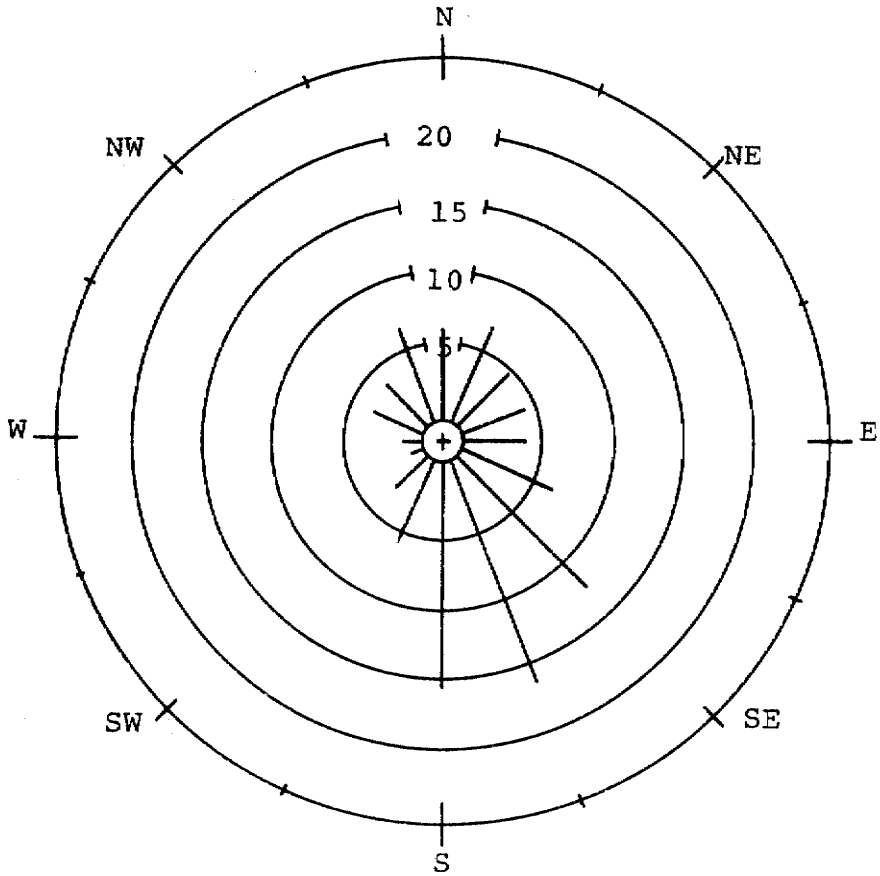

TABLE 15

REGION 8

ESTIMATES OF MEAN MAXIMUM MIXING DEPTHS (FEET ABOVE SURFACE)

Jan.	Feb.	Mar.	Apr.	May	June	July	Aug.	Sep.	Oct.	Nov.	Dec.
1480	2300	3120	3610	3940	4590	6070	6560	4590	3280	2460	1640

distribution systems, all widely distributed throughout the region. Major refineries are located in Cooke and Tarrant counties. Within Region VIII there is a high concentration of business and industrial economic activities in the populous Dallas-Fort Worth Metropolitan area. The varied activities are quite complex. There is extensive manufacturing of aerospace, electronics, apparel, building materials, foods, oil well supplies, and plastics products. In the vicinity are located fertilizer, cement, chemical, soap, detergent, and refining plants. There are boat, trailer, mobile home, and auto assembly works. Numerous other materials and products are manufactured in this metropolitan area. In business it is one of the leading financial, insurance, banking, retailing, marketing, and distributing centers for a multistate region. In transportation it is the hub served by 59 common carriers and has the 7th U.S. ranking airport. It is becoming the leading motion picture, graphic and publishing center in the South.

Factors point to an active economic growth, especially in the Sherman-Denison and Dallas-Fort Worth Metropolitan areas. This growth is mainly located in urban and metropolitan areas for residential, institutional, business, commercial, recreational, and industrial expansion as reflected in the construction permits and population growth. The urban agricultural expansion should be moderate, with livestock production increasing more than agricultural crops.

b. Demography

According to the 1970 census the overall population density of Region VIII was 170 people per square mile. Of the 2,363,374 people residing in this region, 2,043,638 people as shown in Table 16, live in Dallas and Tarrant Counties with population densities of 1,488 and 833 respectively. The Dallas-Fort Worth area is experiencing the problems associated with high population density; solid waste disposal, waste water and sewage treatment, transportation conjestion, and industrial expansion.

Population estimates for the region vary, but the consensus is to expect the population to increase. The trend in the metropolitan areas is showing a significant growth rate. This estimate is confirmed by the 32% (633,250) regional population growth between 1960 and 1970. Only

TABLE 16

REGION 8 DEMOGRAPHIC STATISTICS

County	1970 Census	Area in Square Miles	Density
Collin	66,920	868	77
Cooke	23,471	902	26
Dallas	1,327,321	892	1,488
Denton	75,633	942	80
Ellis	46,638	951	49
Erath	18,141	1,085	17
Fannin	22,705	906	25
Grayson	83,225	927	90
Hood	6,368	426	15
Hunt	47,948	851	56
Johnson	45,769	740	62
Kaufman	32,392	814	40
Navarro	31,150	1,084	29
Palo Pinto	28,962	959	30
Parker	33,888	902	37
Rockwall	7,046	147	48
Somervell	2,793	197	14
Tarrant	716,317	860	833
Wise	19,687	909	22
Total	2,636,374	15,362	

$$\text{Average Population Density} = \frac{2,636,374}{15,362} = 171.6$$

Fannin and Navarro counties had a population decline during this period. Vehicular registration (passenger automobiles) in 1972 was 1,135,606 for Dallas and Tarrant Counties, compared to 1,048,202 in 1970, an increase of about 4% a year. Fortunately, meteorological conditions are normally favorable in this region for dispersion of air pollutants; but, as the industrial activities and population density increase in the metropolitan areas, air quality surveillance and enforcement of the Texas Clean Air Act and State regulations will be essential. Present regulations should be sufficient to control the air quality and to solve the problems presented by the population growth in this region.

The new Regional Airport between Dallas and Fort Worth will become a major national air terminal in future years. The increased air traffic will contribute to the economic growth of the region. The high concentration of population within the Dallas-Fort Worth Metropolitan area, combined with aircraft and vehicular emissions, could become a major problem in ambient air quality control.

c. Industrial Development

The major industries of Region VIII are agriculture, crude oil and natural gas production, extensive manufacturing of aerospace and electronics products, apparel, building and construction materials, foods, oil well supplies, cement, lime, and plastics products. Except for a decline in the manufacture of aerospace related materials and products, there was no significant trend in industrial changes within the region.

All new industries are required by present regulations to be in compliance upon beginning operations.

Most industries have voluntarily complied with current state regulations or the requirements of the Texas Clean Air Act. Two classes of industries in the area that have made considerable progress relative to the control of particulate emissions are the cement and lime industries. There has been a noticeable reduction of outdoor burning throughout Region VIII. Hearings and lawsuits have been necessary in order to bring some companies into compliance.

9. Region IX

Region IX is composed of 24 counties covering a total of 28,954 square miles. As shown in Figure 17, the region is located in central and southwest Texas bounded by Regions III and VI on the north, Regions III and V on the east, Regions IV and V on the south and the International Border between the United States and Mexico on the west.

a. Geography and Climate

Region IX lies largely in the Nueces Plain. The eastern area is located in the "Texas Hill Country" with the northwestern edge protruding onto the Edwards Plateau. The principle geomorphic feature is the east-west oriented Balcones Fault which traverses the region. Of secondary geomorphic importance is the uplifted central mineral area in the northeast part of the region and the northeast by southwest oriented Austin Chalk Cuesta along the eastern edge. The region varies in altitude generally rising from 400 feet in the southeast to over 2000 feet on the Edwards Plateau in the northwest. The region is located in the Nueces, Guadalupe, and San Antonio drainage basins.

The climate is generally warm with the majority of the region being semi-arid. Temperatures range from 39°F (mean minimum) in January to 95°F (mean maximum) in July. The extreme averages are 34°F and 100°F for January and July respectively. Periods of cold weather are of unusually short duration.

The annual rainfall for Region IX varies from east to west with the greatest rain falling in the east. Gonzales County has the highest average with 32.73 inches. Val Verde County has the least rain with 17.83 inches. Average rainfall for the region is slightly over 26 inches. Winds also vary greatly. A wind rose is shown in Figure 18 with an upper air vertical mixing depth chart shown in Table 17.

The major natural resources in Region IX are petroleum and natural gas deposits, fertile soil in some areas, mineral products and ores. Sand, gravel, and gypsum are mined in some counties. The region varies widely in natural vegetation post oaks and grasses in the east to cactus prairies in the west. Much of the western and southern portions are covered by a dense growth of catclaw, mesquite, blackbrush, and other wild shrubs.

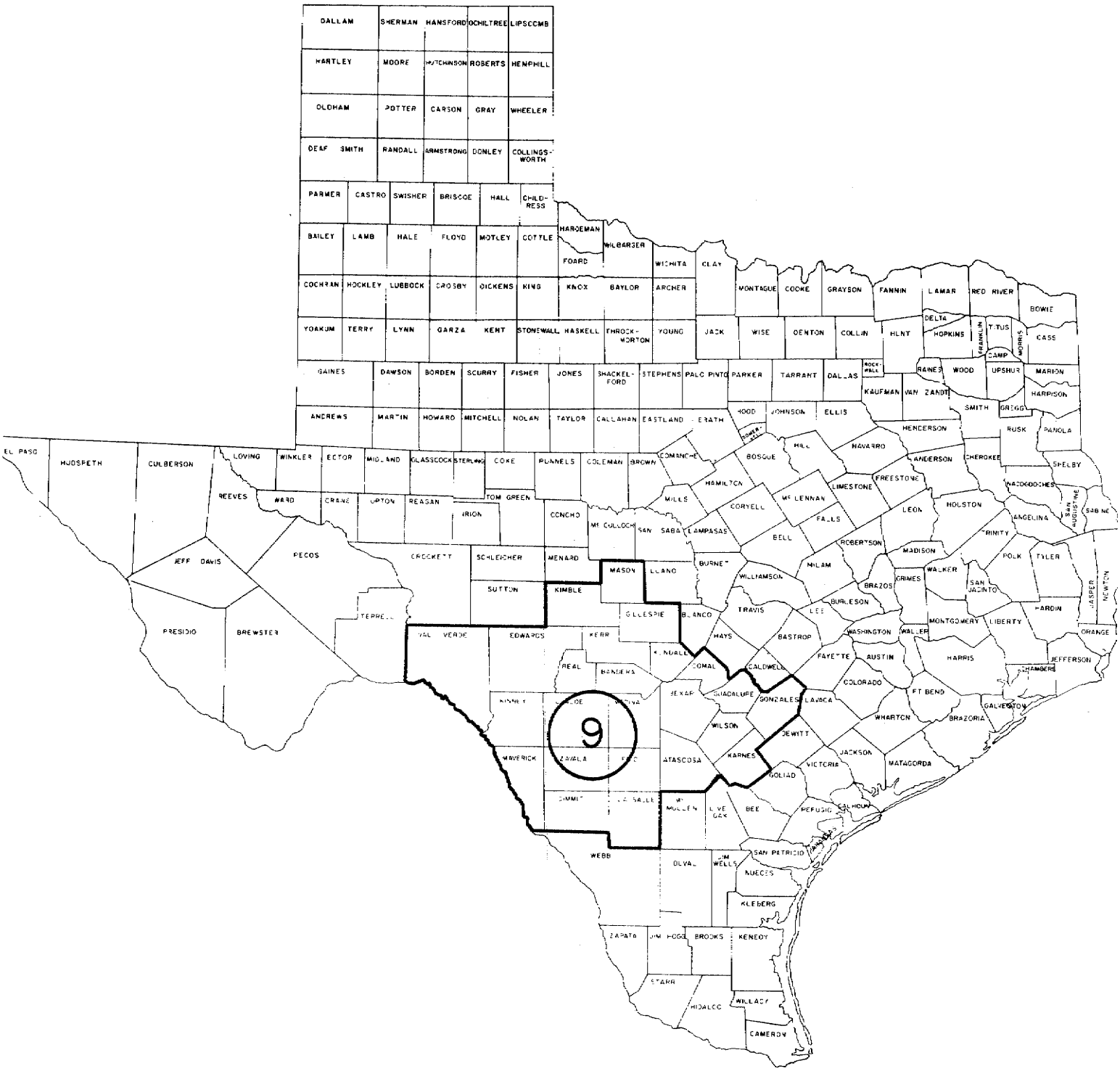
DALLAM
SHERMAN
HANSFORD
OCHILTREE
LIPSCOMB
HARTLEY
MOORE
HUTCHINSON
ROBERTS
HEMPHILL
OLDHAM
POTTER
CARSON
GRAY
WHEELER
DEAF SMITH
RANDALL
ARMSTRONG
DONLEY
COLLINGSWORTH
PARMER
CASTRO
SWISHER
BRISCOE
HALL
CHILDRESS
BAILEY
LAMB
HALE
FLOYD
MOTLEY
COTTLE
HARDEMAN
WILBARGER
FOARD
WICHITA
CLAY
COCHRAN
HOCKLEY
LUBBOCK
CROSBY
DICKENS
KING
KNOX
BAYLOR
ARCHER
MONTAGUE
COOKE
GRAYSON
FANNIN
LAMAR
RED RIVER
BOWIE
YOAKUM
TERRY
LYNN
GARZA
KENT
STONEWALL
HASKELL
THROCKMORTON
YOUNG
JACK
WISE
DENTON
COLLIN
HUNT
DELTA
HOPKINS
FRANKLIN
TITUS
MORRIS
CASS
CAMP
GAINES
DAWSON
BORDEN
SCURRY
FISHER
JONES
SHACKELFORD
STEPHENS
PALO PINTO
PARKER
TARRANT
DALLAS
ROCKWALL
RAINES
WOOD
UPSHUR
MARION
KAUFMAN
VAN ZANDT
HARRISON
ANDREWS
MARTIN
HOWARD
MITCHELL
NOLAN
TAYLOR
CALLAHAN
EASTLAND
ERATH
HOOD
JOHNSON
ELLIS
SMITH
GREGG
HENDERSON
RUSK
PANOLA
EL PASO
HUDSPETH
CULBERSON
LOVING
WINKLER
ECTOR
MIDLAND
GLASSCOCK
STERLING
COKE
RUNNELS
COLEMAN
BROWN
COMANCHE
BOSQUE
HILL
NAVARRO
ANDERSON
CHEROKEE
SHELBY
REEVES
WARD
CRANE
UPTON
REAGAN
TOM GREEN
IRION
CONCHO
McCULLOCH
SAN SABA
MILLS
HAMILTON
CORYELL
McLENNAN
LIMESTONE
FREESTONE
NACOGDOCHES
SAN AUGUSTINE
SABINE
LEON
HOLSTON
ANGELINA
FALLS
LAMPASAS
BELL
TRINITY
ROBERTSON
MADISON
POLK
TYLER
JEFF DAVIS
PECOS
CROCKETT
SCHLEICHER
MENARD
MASON
LLANO
BURNET
WILLIAMSON
MILAM
BRAZOS
GRIMES
WALKER
SAN JACINTO
JASPER
NEWTON
SUTTON
KIMBLE
TERRELL
GILLESPIE
BLANCO
TRAVIS
LEE
BURLESON
HARDIN
PRESIDIO
BREWSTER
VAL VERDE
EDWARDS
KERR
HAYS
BASTROP
WASHINGTON
WALLER
MONTGOMERY
LIBERTY
ORANGE
KENDALL
FAYETTE
AUSTIN
HARRIS
JEFFERSON
REAL
BANDERA
COMAL
CALDWELL
COLORADO
CHAMBERS
KINNEY
UVALDE
MEDINA
BEXAR
GUADALUPE
GONZALES
LAVACA
FT BEND
GALVESTON
BRAZORIA
WILSON
DEWITT
WHARTON
9
MAVERICK
ZAVALA
FRIO
ATASCOSA
KARNES
JACKSON
MATAGORDA
VICTORIA
GOLIAD
DIMMIT
LA SALLE
McMULLEN
LIVE OAK
BEE
REFUGIO
CALHOUN
WEBB
DUVAL
JIM WELLS
SAN PATRICIO
NUECES
KLEBERG
ZAPATA
JIM HOGG
BROOKS
KENEDY
STARR
HIDALGO
WILLACY
CAMERON

Figure 17

Figure 18- Region 9 Wind Rose
Annual Percentages

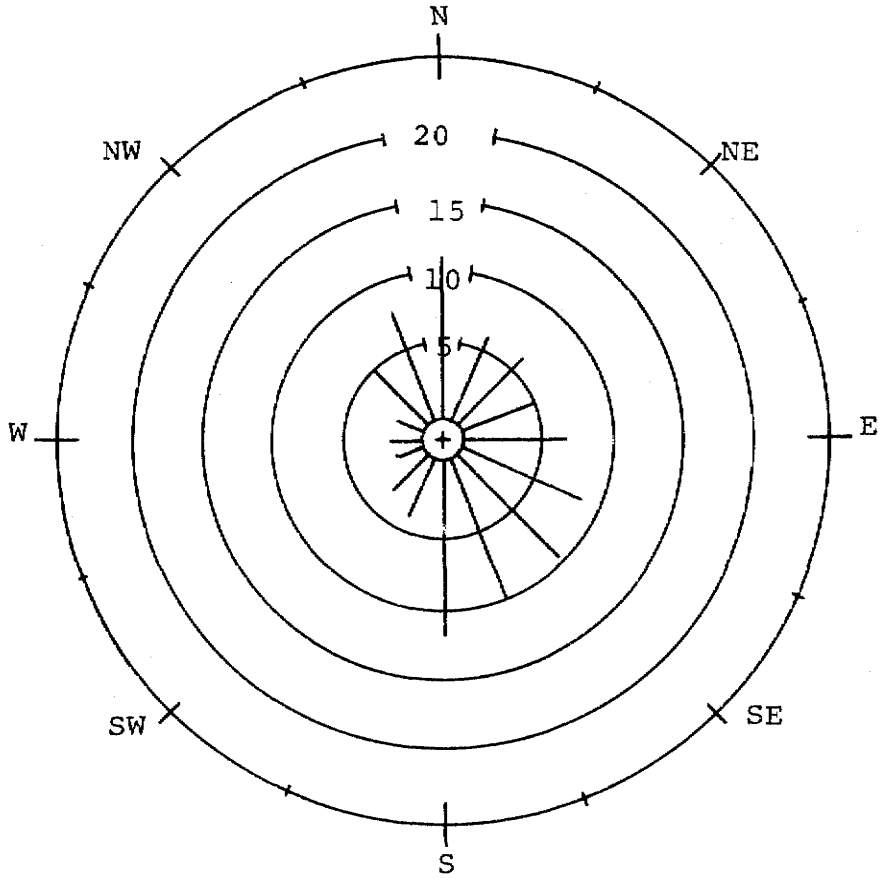

TABLE 17

REGION 9

ESTIMATES OF MEAN MAXIMUM MIXING DEPTHS (FEET ABOVE SURFACE)

Jan.	Feb.	Mar.	Apr.	May	June	July	Aug.	Sep.	Oct.	Nov.	Dec.
1640	2590	3350	3810	4170	5020	6000	6330	4860	3940	2720	1840

The soils in Region IX vary from deep alluvials in the coastal prairies to highly alkaline clays and sands in the Rio Grande Plain. Cultivation and dry farming in the west are difficult due to the hot summers, scant rainfall, and heavy evaporation.

The major economic center for Region IX is San Antonio and its surrounding area. In this area there is a great deal of light industry as well as one or two large iron foundries. Several rock crushing and cement processing plants are found here. The eastern and southeastern areas have a mixture of farming and ranching. Some consideration must also be given to several large military establishments in the area. Oil and gas production is extensive throughout the area south of the Balcones Fault zone. Farming is limited to the eastern and south-central portions, in addition to a narrow strip adjacent to the Rio Grande where water is available for irrigation. Largely, grain sorghums are produced in the eastern and north-central sectors, while vegetables are the chief product of the south-central area. A mixture of crops, including a small quantity of citrus fruit, is produced along the Rio Grande. The western and northern areas are principally pasture lands for cattle, sheep, and goats. There is some mining of granite in the northernmost part of the region.

Moderate economic growth is predicted for the region as a whole, with the San Antonio area outpacing the remainder of the region. Production of oil and gas is expected to slowly decline throughout most of the area where it is currently being produced.

b. Demography

The 1970 census indicates a total population of 1,124,600 for the region as shown in Table 18. Approximately 75 percent of the population (830,460) is located in Bexar County around San Antonio. The average density for the entire region is 39 persons per square mile - ranging from a high of 666 in Bexar County to a low of 1 person per square mile in Edwards and Kinney counties.

Little change is seen in population figures except for the San Antonio area, where most factors point to continued growth. Most of the other areas are expected to remain stable. Some cities, such as Del Rio, may experience slow growth, but

TABLE 18

REGION 9 DEMOGRAPHIC STATISTICS

County	1970 Census	Area in Square Miles	Density
Atascosa	18,696	1,206	15
Bandera	4,747	765	6
Bexar	830,460	1,247	666
Comal	24,165	567	43
Dimmit	9,039	1,340	7
Edwards	2,107	2,075	1
Frio	11,159	1,116	10
Gillespie	10,553	1,055	10
Gonzales	16,375	1,058	15
Guadalupe	33,554	715	47
Karnes	13,462	757	18
Kendall	6,964	670	10
Kerr	19,454	1,101	18
Kimble	3,904	1,274	3
Kinney	2,006	1,391	1
LaSalle	5,014	1,501	3
Mason	3,356	935	4
Maverick	18,093	1,279	14
Medina	20,249	1,353	15
Real	2,013	625	3
Uvalde	17,348	1,588	11
Val Verde	27,471	3,242	8
Wilson	13,041	802	16
Zavala	11,370	1,292	9
Total	1,124,600	28,954	

$$\text{Average Population Density} = \frac{1,124,600}{28,954} = 39$$

the majority of smaller towns may decline slightly. The net change for the region will probably be positive over the next ten years. A favorable inversion frequency and duration means that the development of a photochemical smog condition is unlikely.

c. Industrial Development

No significant change in major industrial development was obvious in Region IX during the 1969-1970 period. There was a slight increase in light industry in the San Antonio and Del Rio areas. Feedlot construction for both cattle and swine did result in an increase of complaints due to the odors arising from this enterprise.

Much of the oil and gas contains sulfur, thereby creating a sulfur dioxide problem. No immediate decline is expected in these areas. Enforcement of current regulations concerning agricultural emissions should result in a decrease in dust emissions since no major changes are expected in agricultural products in the immediate future.

Since the effective date of the 1965 Texas Clean Air Act, 21 variances have been granted to industries in the region. Generally, compliance has been achieved voluntarily.

10. Region X - Interstate Region

The Texas portion of Region X is composed of 15 counties located in the southeastern section of the State of Texas. As shown in Figure 19, the Region in Texas is bounded on the north by Region XII, on the east by the State of Louisiana, on the south by the Gulf of Mexico, and on the west by Regions III and VII. The complete federally designated interstate region includes 39 counties of southern Louisiana. The 39 counties include Vernon, Grant, Rapides, and Avoyelles, and all those south of these counties.

a. Geography and Climate

For Texas, Region X is divided into two primary geographic areas. Jefferson and Orange counties lie in an area termed the Coastal Plains. The remaining 13 counties are located in the East Texas Pine Belt.

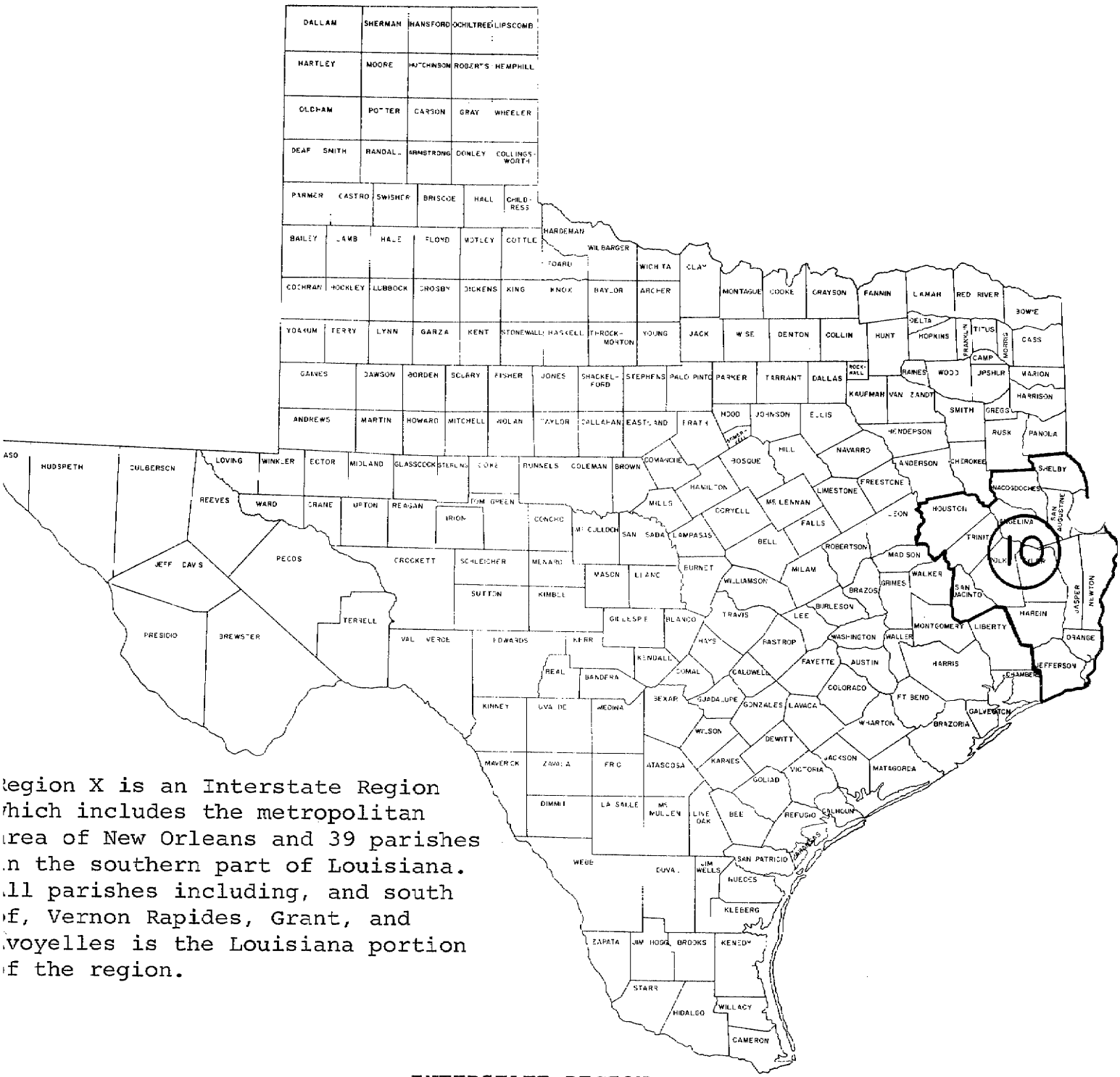

Region X is an Interstate Region which includes the metropolitan area of New Orleans and 39 parishes in the southern part of Louisiana. All parishes including, and south of, Vernon Rapides, Grant, and Avoyelles is the Louisiana portion of the region.

INTERSTATE REGION

Figure 19

The Coastal Plain extends westward from the Sabine River along the coast reaching inland 30 to 60 miles. The plains are generally flat, with an elevation ranging from sea level to 16 feet. No particular geomorphic features are present in this area.

The Pine Belt area extends northward from the Coastal Plains and rises gently from south to north with elevations from 30 to 600 feet above sea level.

The climate in Region X is generally pleasant; however, it is warm and humid. Temperature in the Region varies widely over the area with hot and humid weather prevailing in the south and generally cooler temperatures in the north. The record high temperature in the Jefferson-Orange area was 107°F with a record high for the region being 114°F in Houston County. Temperatures for the region range from 40°F (mean minimum) in January to 93°F (mean maximum) in July.

Region X receives more rainfall than any other region in the State. Rainfall averages over 50 inches per year and combined with the fertile soil makes this region very productive agriculturally.

Wind also varies widely in the region with sea breezes experienced along the coast and northeasterly winds prevailing in the northern area during the winter months. A wind rose characteristic for the entire region is shown in Figure 20. An upper air vertical mixing depth chart is shown in Table 19.

The climate in Region X presents no unfavorable conditions for air pollution. Topography, prevailing winds, and a high inversion frequency are favorable factors.

The major natural resources in Region X are petroleum and natural gas deposits; fertile soil, sulfur deposits, extensive waterways, timber, and abundant rainfall. Approximately two-thirds of the region is covered by forest.

Soil in the region varies from north to south. Sand and red loams are found in the south, with clays and deep alluvials found in the north. The redlands in the north are of the Nacogdoches and Magnolia type with Caddo and Segno bordering the coastal plains.

For Texas, the major economic activity in the south of the region is petroleum refining and the petrochemical industry.

Figure 20- Region 10 Wind Rose
Annual Percentages

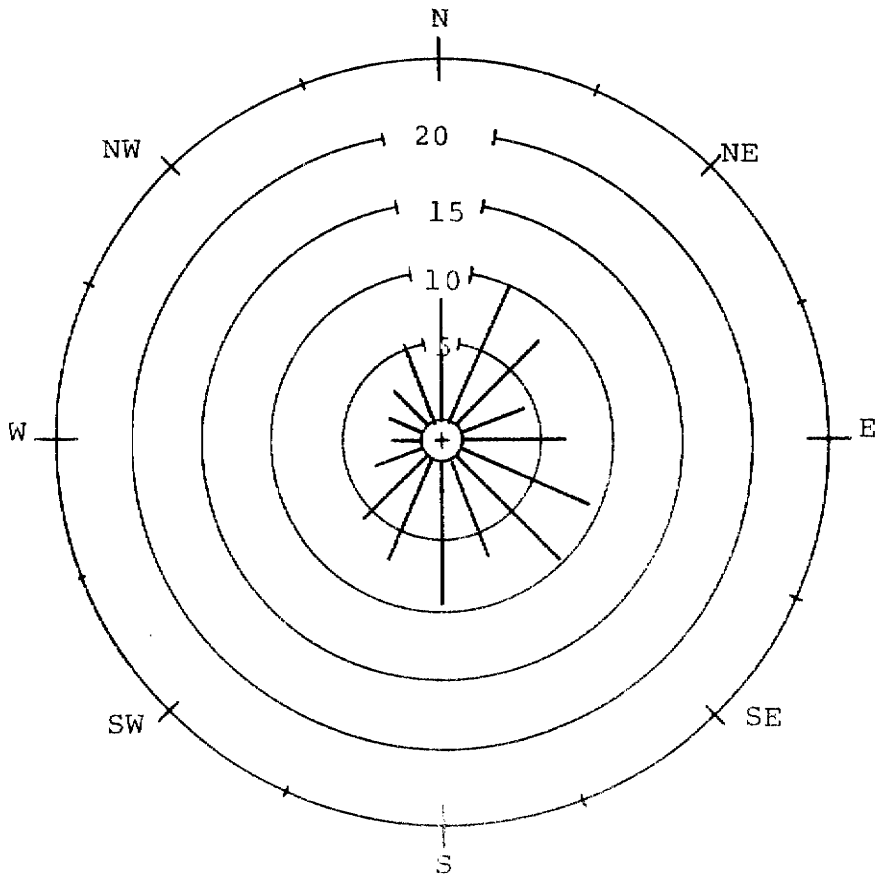

TABLE 19

REGION 10

ESTIMATES OF MEAN MAXIMUM MIXING DEPTHS (FEET ABOVE SURFACE)

Jan.	Feb.	Mar.	Apr.	May	June	July	Aug.	Sep.	Oct.	Nov.	Dec.
1710	2460	2790	3280	3610	3940	3940	4100	4100	3940	2620	1900

In this area there are seven (7) petroleum refineries, and approximately twenty-one (21) chemical companies. A majority of these plants are located in the major metropolitan area of Beaumont, Port Arthur, and Orange. The secondary industries include the chemical industries, rice farming and processing, and the sulfur industry. These two counties have probably reached their peak in industrial development.

The major economic activities in the northern Texas section of Region X are forest products and agriculture which are evenly distributed throughout. The lumber and wood products industry is the major economic activity because seventy-five percent of this area land is covered in forest. Within this region are three national forests (Angelina National Forest, Davy Crockett National Forest, and the Sabine National Forest) and half of a fourth national forest (Sam Houston National Forest). This area produces 446,000 board feet/year of softwood lumber and 85,000 board feet/year of hardwood lumber. In addition, it produces 435,000 railroad ties/year. Associated with the lumber industry are the wood products industry such as paper, pulp, and pallet mills. The poultry and livestock industry plays an important part in the economy of this area.

Factors point to a slight to moderate increase in the economic growth in this region. However, no great influx in heavy industry in the future is expected.

b. Demography

According to the 1970 census, Region X, in Texas, had a total population of 561,775 people. As shown in Table 20, the region has a population density of 46 people per square mile. Of this population approximately 56% or 315,153 people reside in Jefferson and Orange counties.

Population growth estimates for the region vary but no excessive growth rate is predicted. Population in the industrial southern area should grow at a much faster rate than in the northern area.

The northern area is primarily rural, however, tourism is expected to offset typical declines because of the four large man-made lakes. No pollution problems are expected from vehicular emissions typically associated with densely populated metropolitan areas. The more densely populated southern area does not seem to be threatened by pollution problems arising from a dense population because of the climate, topography, and existing state regulations.

TABLE 20

REGION 10 DEMOGRAPHIC STATISTICS

County	1970 Census	Area in Square Miles	Density
Angelina	49,349	799	61.8
Hardin	29,996	895	33.5
Houston	17,855	1,232	14.5
Jasper	24,692	938	26.3
Jefferson	244,773	945	259.0
Nacogdoches	36,362	933	39.0
Newton	11,657	941	12.4
Orange	71,170	356	197.7
Polk	14,457	1,094	13.2
Sabine	7,187	554	13.0
San Augustine	7,858	551	14.3
San Jacinto	6,702	619	10.8
Shelby	19,672	819	24.0
Trinity	7,628	704	10.8
Tyler	12,417	918	13.5
Total	561,775	12,298	

$$\text{Average Population Density} = \frac{561,775}{12,298} = 45.7$$

c. Industrial Development

In the southern Texas area of Region X, the primary industries are petroleum and petroleum by-products, chemicals, shipping, and agriculture. Industrial development has come about primarily through plant expansion. The natural waterways make it one of the leading import-export centers of the state. There are deep water ports located on two navigable rivers in Beaumont, Port Arthur, and Orange. The area also benefits from the Gulf Intracoastal Canal which crosses both Jefferson and Orange counties. The fertile soil, along with the moderate weather, contributes to the rice production in this area. Jefferson and Orange counties in 1968, had a combined rice production of 338,800,000 lbs. Jefferson County was the state's largest rice producer. In this area there have been only two major industries which have come into production since the passage of the Texas Air Control Board Regulations in 1967. The first was a paper mill in Orange County which was in compliance when it began operation. The second was a coal transfer company located in Port Arthur. This company was not in compliance when it began operation, and its status is unknown because of its infrequency of operation. All other major industries were in operation before the passage of the Texas Air Control Board Regulations.

In the northern Texas area, the primary industries are timber, petroleum and petroleum by-products, and agriculture. All three industries are widespread.

Air quality in this area should be easily maintained in the future if present regulations are enforced and the permit system is used to evaluate and control new and existing industries. The sawmills produce sawdust and wood chips which are burned in tee-pee burners which create large amounts of smoke and fly ash. The paper and pulp mills produce severe odors and emissions which must be monitored and controlled more strictly in the future.

11. Region XI - Interstate Region

The Texas portion of Region XI is composed of 6 counties covering 21,778 square miles in the westernmost part of the state of Texas. The region in Texas, as shown in Figure 21, is bounded on the north by the state of New Mexico, on the east by Region VI, and on the south and west by the Rio Grande River - the International Border between the United States and Mexico. The complete federally designated interstate region includes the two counties of Don Ana and Otero in New Mexico.

a. Geography

The area is distinctive in its physical characteristics as it contains all of Texas' true mountains. The entire region is transversed from north to south by an eastern range of the Rocky Mountains. There are approximately seven peaks with elevations of 8,000 feet or greater. Peaks of greater than 7,000 feet are numerous. The Big Bend of the Rio Grande is also contained in this area. Three spectacular canyons are formed by the Rio Grande in its course through the area.

The climate is arid, subtropical, characterized by an abundance of sunshine throughout the year, high but not extreme daytime summer temperatures, low humidity, and a relatively cool winter season. Rainfall throughout the year is light and insufficient for any growth except desert vegetation. Annual rainfall varies from 7 inches to about 18 inches in the Davis Mountains. Average annual precipitation is 11 inches.

Temperature in the region varies from 31°F (mean minimum) in January to 90°F (mean maximum) in July. Average summertime temperatures range from 65°F to 97°F, and wintertime temperatures range from 30°F to 55°F. The rough, uneven terrain and scanty rainfall are unfavorable for agriculture except for a small portion of the Rio Grande Valley running down the river from El Paso for a distance of about 75 miles. Intensive agricultural activity is in progress in this valley because of irrigation water obtained from the river.

Due to the soil surface being loose and dry and the lack of natural vegetation, the area is subject to increased particulate loadings from moderately strong winds. A wind rose is shown in Figure 22 and an upper air vertical mixing depth chart is given in Table 21.

The chief resources are fertile land in the Rio Grande Valley near El Paso and in northern Hudspeth, new underground

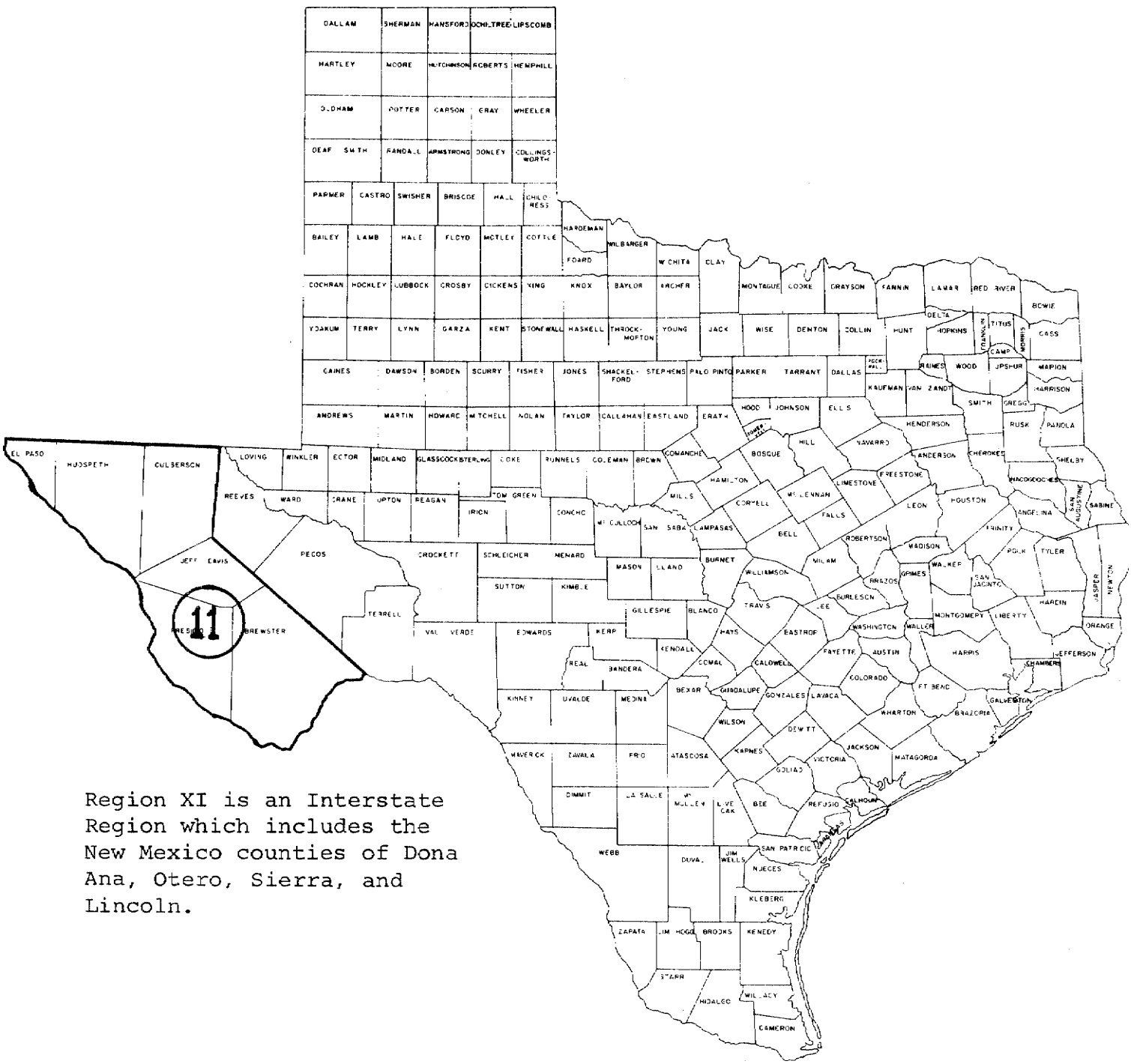

Region XI is an Interstate Region which includes the New Mexico counties of Dona Ana, Otero, Sierra, and Lincoln.

INTERSTATE REGION

Figure 21

Figure 22- Region 11 Wind Rose
Annual Percentages

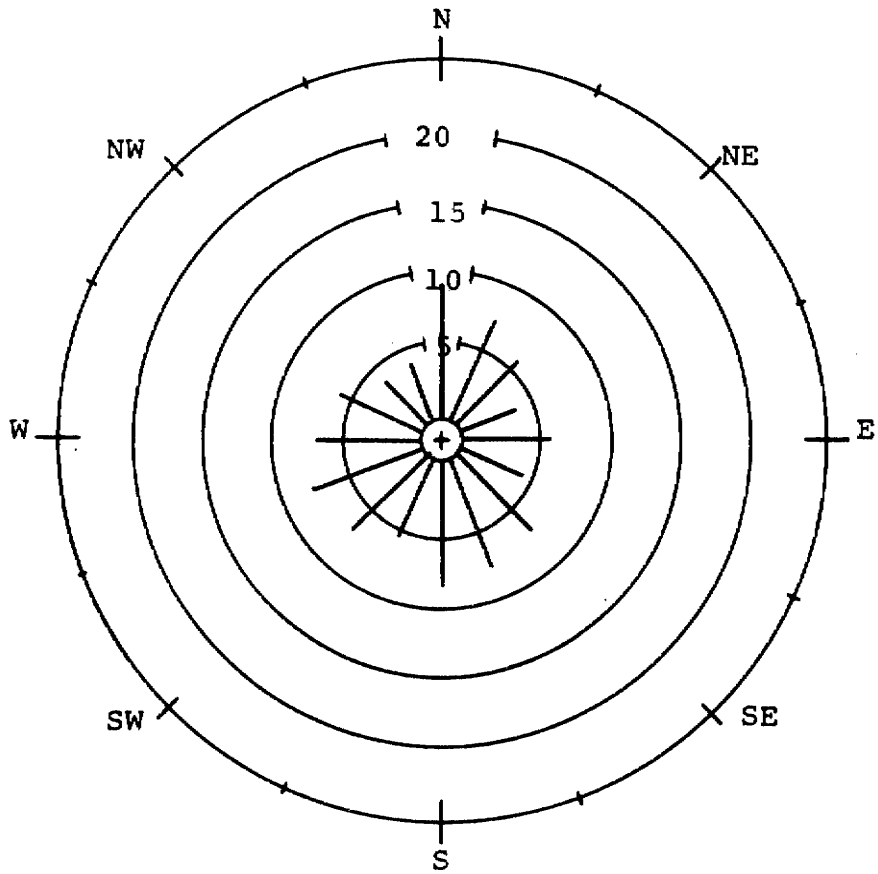

TABLE 21

REGION 11

ESTIMATES OF MEAN MAXIMUM MIXING DEPTHS (FEET ABOVE SURFACE)

Jan.	Feb.	Mar.	Apr.	May	June	July	Aug.	Sep.	Oct.	Nov.	Dec.
2490	4300	5910	6820	10170	9910	8990	7870	5840	4000	3410	1900

sulfur deposits in northeastern Culberson County, some mercury and lead mines in the extreme southern portion of the region, petroleum, sand and gravel, and assorted minerals.

Factors indicate a moderate growth rate in the El Paso area with the rest of the area remaining stable at best. The only major influx of industry that could possibly affect air quality would be a large sulfuric acid plant presently under construction in El Paso. Consideration of Texas Air Control Board Regulations was made in the design of the acid plant. Adherence to present and proposed regulations should provide adequate control of air pollution within the region. The major problems within the region are the control of sulfur compounds from metal smelting; particulate from cotton gins, cement plants, asphalt batching plants, and automotive emissions in El Paso.

b. Demography

According to the 1970 census for Texas the overall population density of the region is 17 people per square mile. Of the 379,261 people residing in this region, 359,291 people are concentrated in El Paso County as shown in Table 22. The population of El Paso accounts for about 95% of the population of the entire region. It should be noted here that the city of Juarez, Mexico, lies immediately adjacent to the El Paso City Limits separated only by the International Boundary formed by the Rio Grande. Juarez has an estimated population of 450,000 people. The combined population of the two cities is over 800,000 people. From an air pollution standpoint, these two cities must be considered as a single metropolitan area. There are problems normally associated with the high density population areas in the El Paso area.

Population in Region XI can be expected to decline or remain static with the exception of El Paso. The El Paso area can be expected to continue its present growth rate. No information is available for Juarez, but all indications point toward continued growth.

Present and proposed regulations should be sufficient to control any air pollution problems arising from population growth.

c. Industrial Development

For Texas, in Region XI the major industrial activities are ore smelting, petroleum refining, steel manufacturing, cotton

TABLE 22

REGION 11 DEMOGRAPHIC STATISTICS

County	1970 Census	Area In Square Miles	Density
Brewster	7,780	6,208	1.3
Culberson	3,429	3,848	0.9
El Paso	359,291	1,054	340.9
Hudspeth	2,392	4,533	0.5
Jeff Davis	1,527	2,258	0.7
Presido	4,842	3,877	1.2
Total	379,261	21,778	

$$\text{Average Population Density} = \frac{379,261}{21,778} = 17.4$$

gining and the manufacturing of construction materials. There are no significant trends in industrial expansion.

A smelting and refining company did build a 15 million dollar sulphuric acid plant to use sulfur dioxide previously being vented into the El Paso atmosphere. One large quarry in El Paso has altered their procedures and made improvements on their asphalt plant resulting in reduced particulate emissions from their property. Relative to the best available information, all new industries within this region have been in compliance with state regulations. Most major industries are in compliance, with the exception of the smelter plant referred to above, which is presently under court ordered schedule to achieve compliance and one refinery which is under Texas Air Control Board order schedule to achieve compliance.

12. Region XII - Interstate Region

The Texas portion of Region XII is composed of 23 counties covering 15,761 square miles in the northeastern section of the State of Texas. As shown in Figure 23, the region in Texas is bounded on the north by the Red River - the state boundary between Texas and Oklahoma. The eastern boundary is the state of Louisiana, with Region X on the south and Region VIII on the west.

a. Geography and Climate

Region XII in Texas is located in that section of the state known as the Pine Belt with the western edge extending into the Post Oak Belt bordering on the Blacklands. The terrain is gently rolling hills with little change in elevation (generally 200 to 600 feet). The area is more than 50% forested with pine and hardwoods. Improved pasturage is increasing. Several large water storage reservoirs are included in the area and more are in the planning and construction phases. The climate is mild in the winter with warm summers.

Temperature ranges from 35°F (mean minimum) in January to 94°F (mean maximum) in July.

The average rainfall in Region XII is approximately 42 inches. Winds are varied with no prevailing winds - a wind rose is shown in Figure 24. An upper air vertical mixing depth chart is shown in Table 23. The terrain and climate appear to present no adverse effect on continued economic development.

Region XII is an Interstate Region which includes McCurtain County of Oklahoma and the below listed parishes or counties for Louisiana and Arkansas:

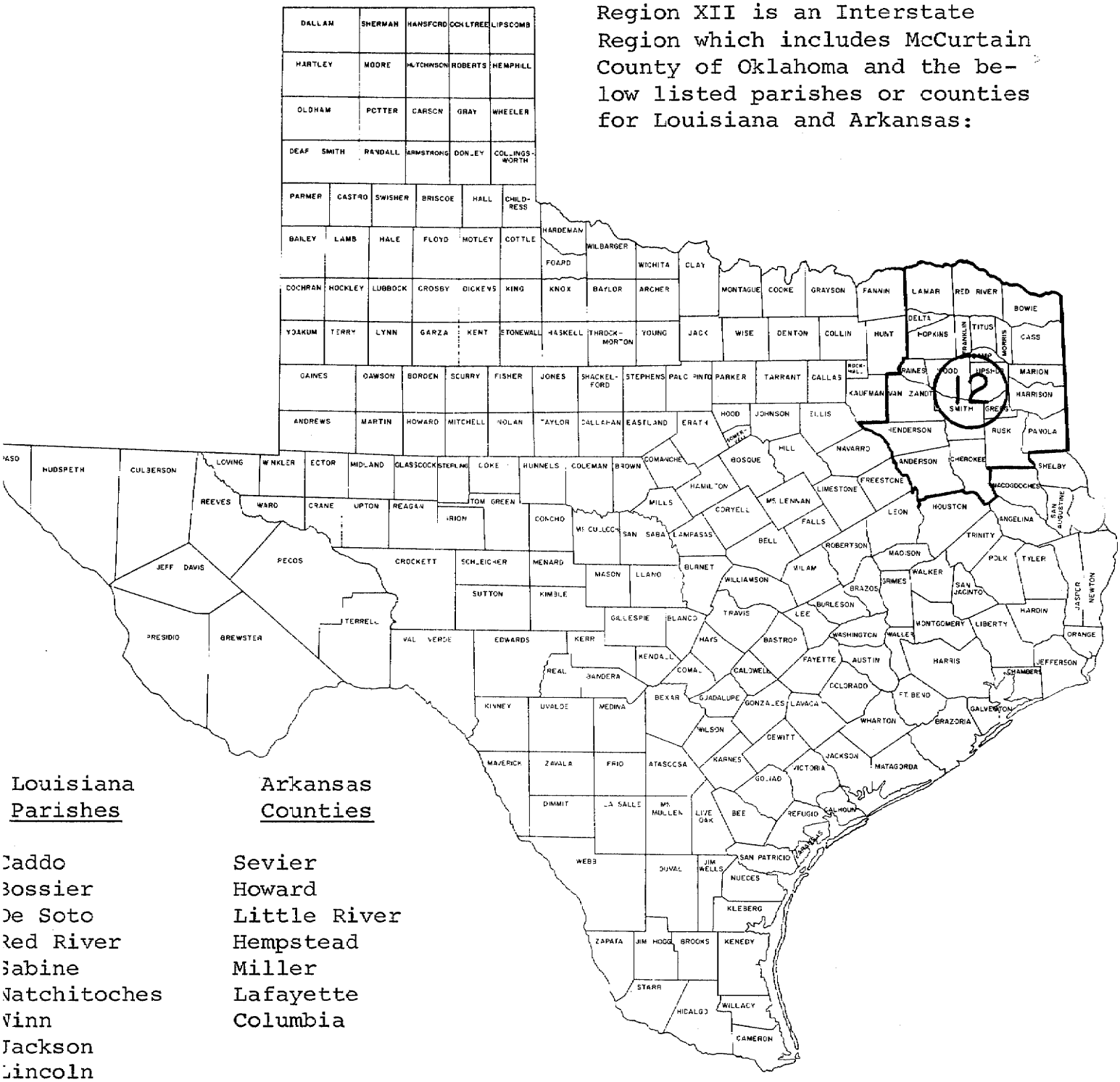

Louisiana Parishes	Arkansas Counties
Caddo	Sevier
Bossier	Howard
De Soto	Little River
Red River	Hempstead
Sabine	Miller
Natchitoches	Lafayette
Winn	Columbia
Jackson	
Lincoln	
Bienville	
Webster	
Claiborne	

INTERSTATE REGION
Figure 23

Figure 24- Region 12 Wind Rose
Annual Percentages

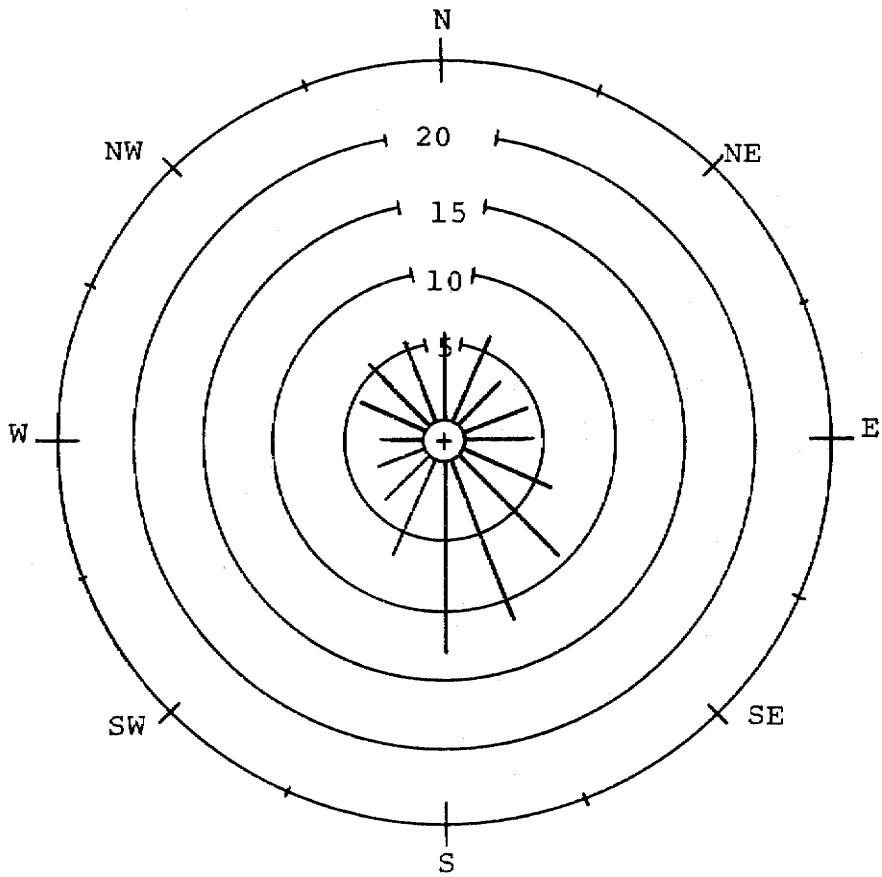

TABLE 23

REGION 12

ESTIMATES OF MEAN MAXIMUM MIXING DEPTHS (FEET ABOVE SURFACE)

Jan.	Feb.	Mar.	Apr.	May	June	July	Aug.	Sep.	Oct.	Nov.	Dec.
1570	2130	3050	3610	3710	4270	5250	5410	4270	3280	2400	1800

Principal natural resources in Texas are oil, natural gas, timber, iron ore, lignite, and water. The East Texas oil field has produced more oil than any other field in the world. Oil and gas reserves are being conserved so that production is expected to continue for many years. Good forestry management is expected to increase timber production in the future. Lignite reserves are just now beginning to be used on a large scale. Other natural resources utilized include sand, gravel, and clays.

In Texas the major economic activities include beef cattle production, milk and dairy operations (Hopkins County produces more milk than any other county in the United States), timber production, and those activities associated with oil and gas production. Food and fiber production do not account for as much economic activity as in years past.

b. Demography

Population and population density for Region XII, according to the Texas 1970 census, are 638,365 people with approximately 40 people per square mile. Population statistics are shown in Table 24. Of the total 638,365 population in the region, 51% are classified as living in rural areas. Two standard Metropolitan Statistical Areas are included in the region. Smith County (Tyler) and Bowie County, Texas - Miller County, Arkansas (Texarkana) are these two areas. Gregg County with the cities of Longview, Kilgore, and Gladewater is also largely urbanized. However, these urbanized areas do not generally have all the problems associated with larger, very densely populated cities.

Population in the region is expected to increase moderately in the next few decades. This moderate growth rate is not expected to cause any unusual conditions which will adversely affect the air quality, provided federal guidelines on auto exhaust emissions are met. Texas Regulations should provide for an improvement in the air quality of the region.

c. Industrial Development

The major industries for Texas in Region XII include several foundries, steel mills, refineries, several sulfur recovery plants, pulp and paper mills, and many small wood products companies.

Moderate industrial growth is expected to continue. The use of lignite in lieu of natural gas for fuel in electric

TABLE 24

REGION 12 DEMOGRAPHIC STATISTICS

County	1970 Census	Area in Square Miles	Density
Anderson	27,789	1,067	26.0
Bowie	67,813	903	75.1
Camp	8,005	190	42.1
Cass	24,133	950	25.4
Cherokee	32,008	1,048	30.5
Delta	4,927	276	17.8
Franklin	5,291	293	18.1
Gregg	75,929	284	267.4
Harrison	44,841	892	87.3
Henderson	26,466	936	28.3
Hopkins	20,710	793	26.1
Lamar	36,062	906	39.8
Marion	8,517	375	22.7
Morris	12,310	260	47.3
Panola	15,894	880	18.1
Rains	3,752	235	16.0
Red River	14,298	1,032	13.9
Rusk	34,102	937	36.4
Smith	97,096	922	105.3
Titus	16,702	418	40.0
Upshur	20,976	586	35.8
Van Zandt	22,155	855	25.9
Wood	18,589	723	25.7
Total	638,365	15,761	

$$\text{Average Population Density} = \frac{638,365}{15,761} = 40.5$$

generating plants may have an impact on the overall air quality of the region. Air quality in the region has been improving due to enforcement of Texas Air Control Board Regulations. This improvement should continue despite expected industrial growth because all new industries will be required to meet or exceed established regulations by means of the permit system. Major problems in control of air quality in this region include foundries, sulfur recovery plants, steel mills and the many wood product industries.

All known new industries in the region were in compliance with existing regulations when operations began.

All known major sources of pollution in the region have either voluntarily complied with existing regulations or are in the process of installing abatement equipment. Legal action has been taken in a few instances to compel compliance.