NTRD Program Disclaimers

1. Disclaimer of Endorsement:

The posting herein of progress reports and final reports provided to TCEQ by its NTRD Grant Agreement recipients does not necessarily constitute or imply an endorsement, recommendation, or favoring by TCEQ or the State of Texas. The views and opinions expressed in said reports do not necessarily state or reflect those of TCEQ or the State of Texas, and shall not be used for advertising or product endorsement purposes.

2. Disclaimer of Liability:

The posting herein of progress reports and final reports provided to TCEQ by its NTRD Grant Agreement recipients does not constitute by TCEQ or the State of Texas the making of any warranty, express or implied, including the warranties of merchantability and fitness for a particular purpose, and such entities do not assume any legal liability or responsibility for the accuracy, completeness, or usefulness of any information,apparatus, product, or process disclosed, or represent that its use would not infringe privately owned rights.

New Technology Research & Development Program
Grant Contract 582-5-70807-0001

Tasks 2 & 3 Deliverable Report
Final Report

The preparation of this report is based on work funded in part
by the State of Texas through a Grant from the
Texas Commission on Environmental Quality.

ADVANCED ENERGY SYSTEMS

GTI REPORT

On-site Hydrogen Generation and Fueling System with a Hydrogen-fueled Vehicle

Final Report

GTI Project Number 20284

TCEQ Contract Number 582-5-70807-0001

July 2007

Submitted to:
Texas Commission on Environmental Quality

Prepared by:
Ken Kriha
Tony Lindsay
Brian Weeks
David Zuckerman

Gas Technology Institute
1700 South Mount Prospect Road
Des Plaines, IL 60018
www.gastechnology.org

On-site Hydrogen Generation and Fueling System with a Hydrogen-fueled Vehicle

TCEQ Project # 582-5-70807-0001

Table of Contents

3	Project Summary
3	Project Background
3	Project Goals
4	Project Results
6	Market Potential for Hydrogen Supply Systems
6	Market History
6	Market Environment and Trends
7	Market Size Defined
7	Evidence of Market Pull
8	Customer Description and Segmentation
9	Technology Description
9	Steam Methane Reformation
12	GTI's SMR Technology
13	Emissions
13	Multi-Fuel Capability
14	Desulfurization
14	Vaporization
14	Integrated Fueling System
15	Energy Balance and CO_2 Footprint
16	HydroFill Dispenser Technology
17	Pictures and Descriptions of Additional System Components
18	System Compression

18	On-board High Pressure Storage
19	Final Assembly and Testing
20	Hydrogen Fuel Cell Electric Hybrid Bus
22	Pictures and Descriptions of Major Bus Components
26	Project Conclusion

Project Summary

Texas Partnership to Advance Toward Hydrogen (Tex – PATH)

PROJECT BACKGROUND

This purpose of this project was to develop a commercially viable on-site hydrogen generation and supply system that can provide fuel for fuel cell or hydrogen-combustion vehicles. Gas Technology Institute (GTI) and its project partners, GreenField, an Atlas-Copco Company (GreenField), the University of Texas, Center for Electromechanics (UT-CEM), and Ebus, Inc (Ebus) have designed, developed, constructed, tested, and validated the performance of a fully integrated natural gas-to-hydrogen fueling station and a hydrogen-fueled, fuel cell electric hybrid bus.

Economically transporting and storing hydrogen in order to dispense it for vehicle use is one of the biggest hurdles in the widespread availability of a hydrogen supply infrastructure. This project shows that on-site hydrogen generation is an excellent fueling system solution for emerging hydrogen vehicle applications. Generating hydrogen on-site using the existing natural gas supply network, or using renewable liquid fuels such as ethanol is relatively inexpensive, has a low carbon footprint, and avoids many of the logistical issues involved in delivering hydrogen from a central location.

Hydrogen is typically produced in large, central plants operated by industrial gas companies. It is shipped to end-users as a compressed gas in tube trailers or in liquid form in specialized cryogenic liquid storage trailers transported by trucks. For some applications, hydrogen is produced via electrolysis, using electricity and water to generate hydrogen on-site. Each of these methods for providing hydrogen are very expensive and require specialized storage and dispensing systems as well as trained personnel to operate and maintain the equipment.

Transporting hydrogen to its point of use is the most expensive component of the final cost – up to 80% of the delivered price. One reason that transporting and storing hydrogen is so expensive is that it has a very low density. At least eleven (diesel-fueled) hydrogen-carrying tube trailer trucks are needed to haul the energy equivalent of one gasoline tanker truck. As an alternative, electrolysis has been used periodically for small vehicle fleets, however it yields hydrogen at a cost of $8 to $12 per gasoline gallon equivalent (gge). Hydrogen from electrolysis is also dependent upon the power grid, which arguably does nothing to decrease the overall carbon “footprint” of a hydrogen-fueled vehicle. Liquid hydrogen is also available via cryogenic tanker trucks but must be stored on-site in special tanks at minus 423°F. The cost of Liquid hydrogen is about the same as hydrogen produced from electrolysis, but is subject to product losses of 1% to 2% per day from venting as the fuel naturally warms.

While conventional methods for delivering hydrogen may be sufficient for traditional industrial hydrogen applications, a new, lower-cost solution must be found for hydrogen vehicle applications to become cost competitive with other alternate fuels and eventually with conventional fuels. In this project, GTI uses a proven industrial hydrogen generation process called steam methane reformation (SMR) to generate hydrogen fuel for vehicle applications. SMR technology is commonly used in refineries to generate hydrogen at a very large scale. In fact most of the hydrogen used in the world today is generated using SMR technology because of its low cost. GTI, using its patented technology, scaled this industrial-sized process down to a size that can be used for vehicle fueling applications.

The on-site fueling infrastructure developed as part of this project will possibly move commercial, zero-emissions fuel cell vehicles into broader use by providing a turn-key, low-cost, and reliable

fueling solution that is supported by a major corporation (GreenField/Atlas-Copco) with an extensive global service and support network.

PROJECT GOALS

In July 2004, GTI submitted a proposal to the Texas Commission on Environmental Quality (TCEQ) to perform the goals listed below and verify through testing that on-site hydrogen generation and dispensing technology is ready for commercialization. GTI submitted the proposal for funding through the Texas Emissions Reduction Program, or "TERP" via the New Technology Research and Development (NTRD) fund. The NTRD Program provides financial incentives to encourage and support research, development, and commercialization of technologies that reduce pollution in Texas through the issuance of state funded grants. In July 2005, TCEQ and GTI entered into a project agreement in which GTI would perform the following tasks:

- Design, develop, construct, ship, test, and validate the performance of a fully integrated natural gas or LPG to hydrogen fueling station.
- Identify, verify, and demonstrate a hydrogen-fueled vehicle that contains a zero-emission fuel cell power train. A prototype/pre-commercial vehicle will be developed for the medium or heavy-duty vehicle market.
- Prepare and submit monthly reports and a comprehensive final report.

GTI had multiple program goals in this project. In addition to developing a basic on-site hydrogen generation and dispensing system, GTI and its partners needed to create a system that is commercially viable for real consumer applications. For this, the system needed to contain all necessary components for hydrogen generation and dispensing. The system needed to be factory tested and ready to use once it is delivered to its installation site, and it needed to be skid-mounted and easy to operate, so that very little, if any on-site engineering and operator expertise is required. The program goals for the project were:

- Develop a high-efficiency fuel processor/reformer using natural gas, and then transfer the technology to a Texas-based company for eventual commercialization.
- Develop and demonstrate a dispenser system the yields reliable, complete, and safe fills for hydrogen-fueled vehicles.
- Investigate in-dispenser hydrogen training technology as a cost-effective means of training new users to refuel hydrogen-fueled vehicles.
- Develop a compact, fully integrated, efficient and reliable on-site hydrogen fueling station.
- Develop a prototype medium/heavy duty hydrogen fuel cell vehicle that can be supported by fuel from the fueling station.
- Locate a site for eventual installation of the hydrogen fueling station (funding for station installation was not provided as part of this project)

PROJECT RESULTS

All major goals and objectives for this project have been achieved or exceeded.

Working with the US Department of Energy (DOE), Department of Defense, and others, Gas Technology Institute (GTI) has developed an on-site hydrogen fueling system that produces and dispenses hydrogen at the point of use, relying on existing networks of conventional fuels, such as natural gas, or ethanol. The process of creating hydrogen from hydrocarbon fuels is called reformation. Early tests have shown that this process can produce hydrogen at a cost that is at least one-third that of electrolysis and less than a tenth the cost of delivered compressed hydrogen.

This TCEQ-funded project integrated the GTI reformation technology with compression, storage, purification, and dispensing systems in a transportable, skid-mounted enclosure. A sophisticated electronic controls system was installed and is in the last steps of being programmed so that the system can be monitored and operated remotely. The system is ready for demonstration at a site in Texas where a fuel cell hybrid electric bus will be operated as part of a follow-on project.

This project leverages funding from two important federal programs. GTI recently completed a multi-year $4.2 million program funded through DOE to develop small-scale hydrogen generation technologies using steam reformation. UT-CEM has an ongoing multi-year program to test and evaluate advanced fuel bus technologies. These two programs were leveraged with TCEQ's funding of the Tex-PATH project to yield the on-site integrated hydrogen fueling system and the hydrogen-fueled fuel cell hybrid bus. GTI and its project partners demonstrate in this project that fuel cell vehicles and the infrastructure to support them are not a vision of the distant future, but are viable technologies, ready for use today.

Summary of Project Results

GTI and its project partners developed and built a fully integrated hydrogen fueling station, ready for deployment.

An advanced high-pressure dispensing system based on GTI's proprietary algorithm was developed and built for this system – simple and reliable.

The fueling station includes a control system that can provide remote monitoring and operation.

The system is capable of producing up to 80 kilograms of hydrogen per day (enough to service up to 100 passenger cars).

A 22-passenger fuel cell electric battery hybrid bus was developed and built for this project. The bus is road-ready for a follow-on project.

The fueling station can produce hydrogen at a marginal cost under $2 per gge and shows promise for reaching DOE's fully loaded cost goal of $3 per gge at commercial production rates.

GTI's dispenser and hydrogen generation technologies have been licensed to Texas-based GreenField.

UT-CEM has partnered with GTI as the operator of the fuel cell bus and will operate the fueling station in a follow-on project.

Figure 1. The completed hydrogen fueling station being shipped from GreenField's Richardson, Texas facility to GTI's lab in Des Plaines for final testing and validation.

Market History

Methods for the generation, storage and transport of hydrogen have been well known for decades. Hydrogen generation however has been focused on large, industrial consumers that use the gas in manufacturing processes for other products. Hydrogen as a consumer fuel for the emerging fuel cell and hydrogen-fueled vehicle market requires a new infrastructure for generation, conditioning, storage, and distribution. Matching hydrogen fueling infrastructure deployment with the emergence of hydrogen-fueled vehicle technologies is a challenge.

According to the National Hydrogen Association, there are about 100 hydrogen-fueling stations in North America at this time[1]. None of them are located in the State of Texas. These stations have been installed to support important demonstration and technology validation projects for a variety of fuel cell vehicle applications. Fuel cell vehicles that operate on hydrogen fuel have no emissions, are twice as efficient as internal combustion engine-based vehicles, and utilize a fuel (hydrogen) that can be supplied from a number of sources – most of which are available domestically. This project includes an example of this new class of hydrogen-fueled vehicle. A fuel cell hybrid-electric bus has been built by Ebus, Inc. for this project. This bus has been built to commercial specifications and is "road-ready" for passenger use.

Ongoing developments and product deployment in fuel cell and hydrogen-fueled vehicle technology are opening up exciting new market opportunities for hydrogen for transportation applications. GreenField, an Atlas-Copco brand has fabricated the skid-mounted, on-site hydrogen generation and supply system that was developed in this project. GreenField has licensed the technology and plans to commercialize this system worldwide to meet the growing demand for hydrogen fueling solutions. Both of these technologies are being commercialized for other projects and applications.

Market Environment and Trends

There is a strong consensus within government and the transportation industry that hydrogen will become an important – and possibly the primary fuel for future applications; so much so that market uncertainties are focused on the timing and ultimate configurations of hydrogen-based technologies rather than on whether or not they will arrive at all. Consequently, Greenfield's entry into the hydrogen supply market is based on a growing need for this technology rather than on speculation that a market might develop.

Current hydrogen infrastructure solutions are typically customized for each site installation. This adds costs for engineering, installation, maintenance, and equipment replacement. Providing an "off-the-shelf" infrastructure solution is an important step toward making hydrogen infrastructure as simple to install and operate as conventional fueling infrastructure – perhaps even more simple.

There is a tremendous need for hydrogen supply capabilities to be expanded in order to meet the anticipated hydrogen demand for DOE's projected hydrogen passenger vehicle commercialization target of 2015. During the intervening years, hydrogen use for demonstration and validation projects will expand dramatically and much of the infrastructure to prepare for commercial deployment will be put into place.

[1] National Hydrogen Association, http://www.hydrogenassociation.org/general/fuelingSearch.asp, 7-23-07

Market Size Defined

Separate studies by GM and the National Renewable Energy Lab (NREL) have projected infrastructure investment for hydrogen passenger vehicles to be about $10 Billion by the year 2020. This does not include infrastructure requirements for off-road vehicles such as industrial trucks (forklifts) and ground service equipment.

The National Academy of Sciences completed a study of the hydrogen economy in 2004 that indicates hydrogen vehicles will eventually replace conventional fuels for passenger vehicles during the next few decades. The study predicts that multiple fuels will be in use for a period of at least twenty to thirty years as transportation markets transition to a hydrogen economy. This type of market transition supports the concept that off-the-shelf, turn-key, simple to operate, hydrogen supply systems will be required, as fuel marketers strive to supply multiple fuels for their customers.

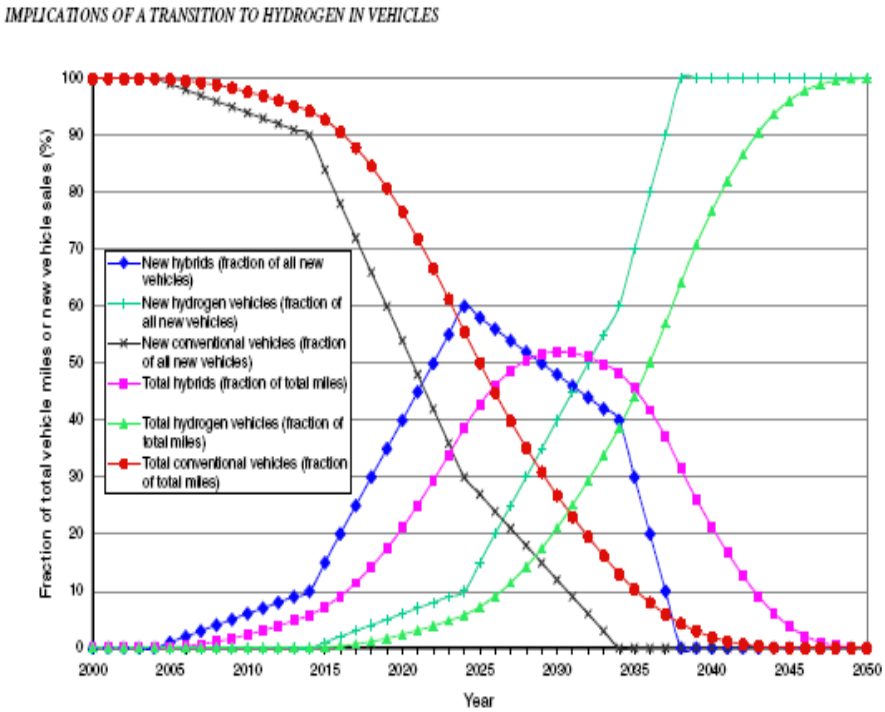

This graph shows the projected percentage of highway miles driven by various vehicle technologies

Evidence of Market Pull

The primary drivers for the introduction of hydrogen vehicle technologies are:

- **Environmental.** There is a continuing trend in the fuels industry to supply cleaner fuels that generate lower emissions. Hydrogen is the ultimate clean fuel because when used in a fuel cell, it generates electricity with no harmful emissions. This is particularly appealing to auto companies (fuel cells avoid EPA emissions regulations) and warehouse operators (who are limited to battery electric forklift vehicles for indoor operations, but have limited flexibility and high maintenance costs). It is also appealing to private and government fleet operators (both on-road and off-road vehicles) in air quality non-attainment areas.
- **Energy Security.** Since hydrogen can be generated from water, as well as any hydrocarbon fuel, it is available from a variety of domestic sources. The DOE and the Department of Defense are both interested in its commercialization as a fuel for the long-term energy security of the nation.
- **Energy efficiency.** While currently expensive, fuel cell technology is inherently more efficient than conventional combustion technologies. As the price of conventional fuels rise, technologies that can utilize them more efficiently (such as fuel cells) become more valuable.

Full-scale commercialization of fuel cells for vehicles and for power generation applications is achievable only with the active and sustained support of government at all levels. Government focus on fuel cells is justified by the unique combination of public benefits they offer: high efficiency, environmental benefits, enhanced energy security, and operational flexibility. In response to these drivers, the federal government and several state governments have increased their support of emerging hydrogen technologies, resulting in numerous demonstration and pre-commercial product programs.

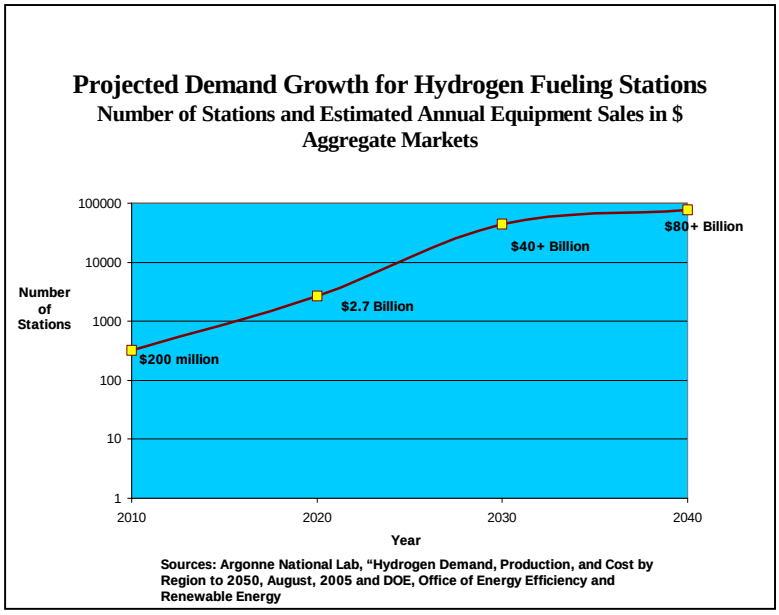

Customer Description and Segmentation

The customer segments for Greenfield's hydrogen supply system include the following:

- **Ground service equipment.** There are multiple flight line support operations for hydrogen use. They include light carts (used extensively by the military for flight-line maintenance), tow tractors (for both baggage and for aircraft taxis), personnel shuttles, and auxiliary power units (APU's). The USAF has been a leader in investigating hydrogen use for flight line applications.
- **Bus Fleets.** One of the first applications for fuel cell vehicles is mass transit. There are a number of fuel cell buses in use in Europe, Canada, and the U.S. Bus fleets are ideal "first-adopters" because they are fueled in the same location each day and have predictable routes. They also provide a bigger emissions impact than passenger cars.
- **Industrial warehouse vehicles (forklifts).** This is an exciting customer segment for fuel cells as warehouse operators already use battery electric vehicles. Compared to the replacement schedule, charging costs, and down-time of battery-powered vehicles, fuel cell forklifts are, by many measures, already economically viable. All of the major forklift manufacturers are developing fuel cell products and these will be launched commercially in the very near future.
- **Government and private fleets.** This category includes existing demonstration projects, such as the California Fuel Cell Partnership, and South Coast Air Quality Management District (SCAQMD) programs that already include about a dozen fueling stations and associated vehicle fleets. It also includes military fleets, airport shuttles, postal vehicles, etc. that are expected to be early adopters of hydrogen-fueled vehicles.
- **NGV Fleets.** Natural gas vehicle fleets can become users of hydrogen without incurring costly vehicle modifications or replacement. Adding a mixture of hydrogen to an existing natural gas vehicle can cut NOx emissions by up to 60%. Adding hydrogen to existing NGV fleets is considered a transitional application that facilities the build-out of the hydrogen infrastructure.
- **Consumer Hydrogen Vehicles.** Consumer passenger vehicles are expected to become commercial users of hydrogen beginning about 2015. This market, once established will overwhelm others. There are approximately 100,000 conventional gasoline-fueling stations in the U.S. today. It is estimated that the equivalent of 10% of these will need to supply hydrogen in order to facilitate consumer fuel cell vehicles' needs.

Steam Methane Reformation (SMR)

GTI's hydrogen generation technology is designed with a multi-fuel capability, i.e., it can utilize natural gas, LPG, ethanol, and biodiesel to generate hydrogen via steam reformation. Natural gas (methane) was selected as the fuel feedstock for this project because it is widely available and it is less expensive per btu than any liquid fuel. In order to utilize liquid fuels, the system will need modifications that were not included as part of this project. These modifications include fuel vaporization and sulfur removal subsystems.

About 95% of the hydrogen produced today in the U.S. is made via steam methane reforming, a process in which high temperature steam is used to produce hydrogen from natural gas[2]. The Figure below shows the basic SMR process that yields high purity hydrogen that can be used as a fuel for fuel cell vehicles.

Figure 2

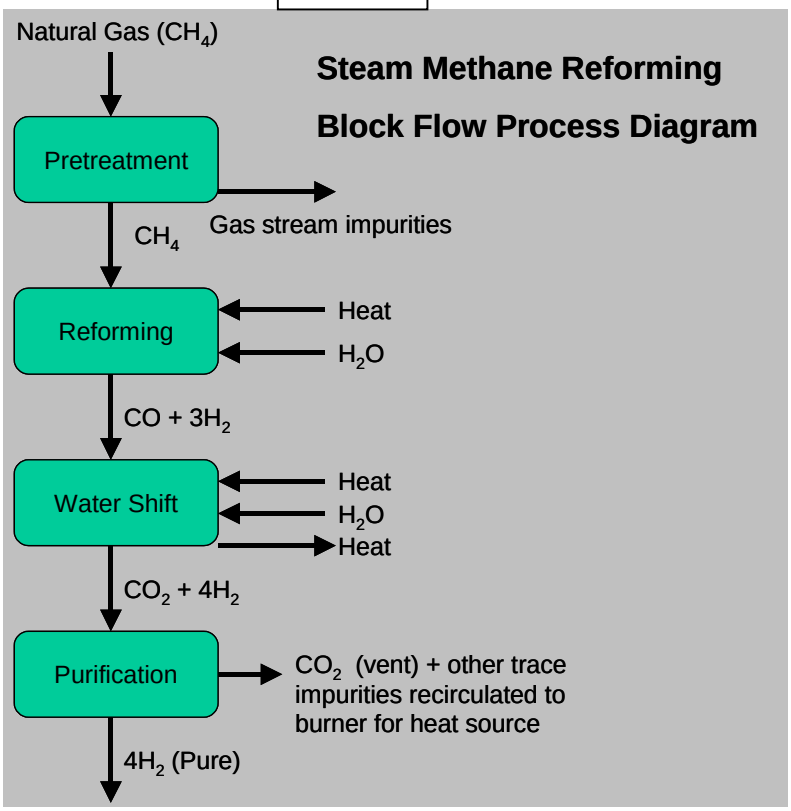

Pretreatment. Natural gas as well as other hydrocarbon feedstocks typically contains sulfur compounds and other impurities that can damage the catalysts used in the SMR reactions. Consequently, they must be removed in a pretreatment process shown in the block flow diagram. The basic process includes a chemical combination between sulfur compounds and recycled hydrogen from the gas stream to form H_2S. The H_2S is absorbed in a zinc oxide bed to form Zinc sulfide, which is then removed periodically as a solid waste. The Pretreatment system for this project is shown in Figure 3 and Figure 4.

Reforming. The steam methane reaction is: $H_2O + CH_4 \rightarrow CO + 3H_2$. This is an endothermic reaction that requires heat produced by a burner that is fueled by natural gas plus other recirculated waste gases that are captured in the purification process. The reformer reactor operates at temperatures in the range of 800° to 900° Celsius. A nickel-based catalyst is typically used to facilitate the reaction, which yields a hydrogen-rich gas stream, but also yields a high percentage of CO.

Water Shift / Gas Conversion. The gas stream resulting from the reformation reaction, as described above, is rich in both H_2 and in CO. Employing a water shift reaction further increases the H_2 content of the gas while converting CO gas to CO_2. In large-scale SMR systems, water shift reaction occurs in two steps at a high (350°C) and at a low (200°) temperature, using different catalysts. In the GTI system

[2] U.S. Dept. of Energy, Energy Efficiency and Renewable Energy "http://www1.eere.energy.gov/hydrogenandfuelcells/production/natural_gas.html"

developed for this project the water shift reaction occurs in one-step at the low temperature range. The chemical reaction is: $CO + H_2O \rightarrow CO_2 + H_2$. This step is exothermic; yielding heat that can be used in the steam generator and increasing the overall energy efficiency of the hydrogen generation system. The reformer and water shift reactor are shown in Figures 5 and 6.

Figure 3

View of 3-tower gas pretreatment system mounted on hydrogen generation reformer skid

Purification. After the gas stream leaves the water shift reactor, it contains a large concentration of hydrogen gas (approximately 70% H_2). Remaining impurities include CO_2, CO, and unreacted CH_4. These remaining impurities must be removed via a pressure swing adsorption (PSA) unit. The PSA works by exposing the hydrogen-rich gas stream to a bed of special adsorbent material that collects CO_2. The PSA then recharges by releasing the contaminant gases in a "depressurized" cycle. The recharged adsorbents are then ready again for the collection of contaminant gases. The "tailgate gas" from the PSA and purification process is recirculated to the reformer's burner, which generates heat for the reformation step. The remaining hydrogen is higher than 99.99% in purity. The PSA unit is shown in Figure 7.

Figure 4

Side view of SMR system desulfurization / pretreatment

The gas pretreatment towers shown in the photos above and at left include replaceable adsorbents that remove sulfur from the feedstock gas stream.

The pretreatment is shown in GreenField's fabrication facility in Richardson, Texas during fabrication and initial testing.

Figure 5

Shown is the completed reformer system mounted on the integrated station skid prior to completing the enclosure.

Figure 6

Shown is a close-up of the reformer and water-shift reactor (on right). The blue vessel is a buffer tank that holds reformate gas prior to purification.

Figure 7

Shown is the Questar PSA that is used to remove impurities from the hydrogen-rich gas stream. Partially shown to the left is a buffer tank where hydrogen is stored

Figure 8

A buffer tank is included between the reformer and PSA. This helps keep the gas reformate mixture and pressures relatively constant prior to feeding into the PSA

GTI's SMR Technology

Gas Technology Institute has developed a small-scale, steam methane reformer through a cooperative program with the U.S. Department of Energy that is designed to generate hydrogen from natural gas, propane, or renewable liquid fuels such as ethane. This program has yielded a system that is reliable, compact, and can be easily manufactured. GTI's approach has been to develop multiple subsystems for hydrogen generation, purification, compression, storage, and dispensing that can be easily integrated using system controls and safety features. As part of this TCEQ-funded project GTI, in cooperation with its commercialization partner, Greenfield Compression has fabricated such an integrated hydrogen fueling system.

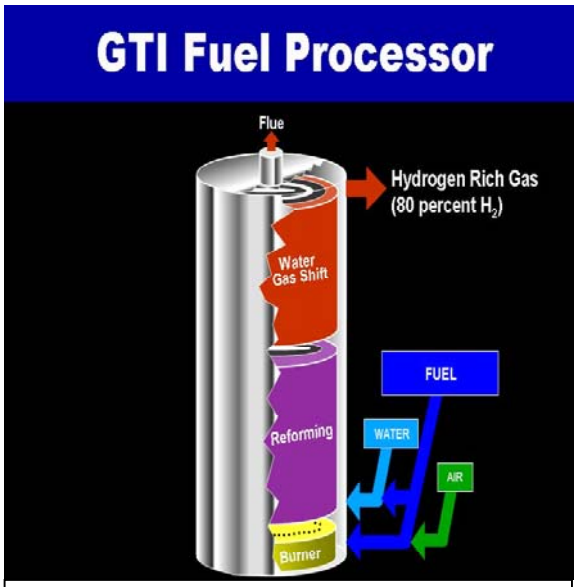

Figure 9

The hydrogen fueling system includes multiple component technologies, however the central technology in the system is the steam methane reformer that generates hydrogen from hydrocarbon fuels. GTI has built, operated, and extensively tested five separate fuel-processing units ranging from 5 kg/day to over 80 kg/day. The units incorporate compact steam generation, fuel reformer, single-stage low-temperature shift, and heat recovery into one package to reduce cost and footprint. GTI has installed one of these systems at a hydrogen fueling station in Chicago. These systems are incorporated into hydrogen fueling station designs for the support of fuel cell vehicles and hydrogen-fueled internal combustion engine vehicles. The hydrogen can also be used for stationary power generation by a fuel cell power system.

GTI's core fuel processing technology uses steam methane reforming (SMR) to achieve the highest hydrogen content and greatest efficiency. The SMR reactor is complemented by tightly integrated single-stage CO shift and an effective CO control technology based on passive methanation that achieves CO levels below 6 parts per million (ppm).

For the TCEQ-sponsored project, GTI has built a system that is rated for up to 80 kilogram of hydrogen per day. This reformer has been integrated into a complete hydrogen fueling system that includes purification, compression, storage, and dispensing subsystems.

GTI Fuel Processor
Design Features and Differentiators

- Simple construction—combined shift and methanation reaction sections
- Passive CO control via methanation (much simpler than selective CO oxidation)
- Very low CO levels
- Load following capability (3:1 turndown)
- Inexpensive catalysts
- Catalytic combustion for high efficiency and low emissions
- No membranes
- Safe operation
- Designed for low natural gas inlet pressure

These pictures (Figure 10) show small and large versions of GTI's compact fuel processors, each of which contains the steam methane reformer, steam generator, shift reactor, methanation reactor, integrated burner, and heat exchanger in one compact system. Efficiencies over 80% have been demonstrated.

Figure 10

Emissions

Since the SMR process yields a reformate composed of varying percentages of H2, CO, CO2, and CH4, of which all but the predominance of the H2 is filtered out by the PSA, these gases are then recycled to the reformer's burner where they are combusted to contribute to the external heat input required for the reformation process. The emissions from the system are therefore typical of the products of combustion of these recycled gases and will not change very much in constituency as one moves from one feedstock to another. The amounts of each compound will very slightly as some of the fuels under consideration require more water for vaporization in order to accommodate the proper steam to carbon ratios required to prevent carbon deposition.

Multi-Fuel Capability

GTI has tested and documented the multi-fuel capability of this hydrogen generation system. This has included system performance on liquefied petroleum gas (LPG) and renewable fuels such as ethanol and biodiesel. The primary issue in using liquid fuels is the need to remove impurities that may adversely impact the reformer and water shift catalysts. Adsorbents used to remove sulfur from natural gas are not effective in removing sulfur compounds from liquid fuels. GTI is considering follow-on project in which the reformer may use ethanol or E85. GTI is currently involved in US DOD projects utilizing JP8 as a feedstock for hydrogen. The following equations show the chemical reaction inside the reformer for fuels other than natural gas:

Methane:

$CH_4 + H_2O$ (+heat) $\rightarrow CO + 3H_2$

Propane:

$C_3H_8 + 3H_2O$ (+heat) $\rightarrow 3CO + 7H_2$

Ethanol:

$C_2H_5OH + H_2O$ (+heat) $\rightarrow 2CO + 4H_2$

Gasoline:

$C_8H_{18} + 8H_2O$ (+heat) $\rightarrow 8CO + 17H_2$

Desulfurization

Diesel or JP8 powered SOFC power plants are envisioned for critical and non-critical military use such as auxiliary power units (APUs), portable power, and permanent stationary power. GTI is in phase 4 of a US DOD program focused on stationary military fuel-powered SOFC systems targeted up to 10 kW capacities. GTI has progressed with this objective through lab, breadboard, and prototype systems in Phases I to III of this program and was recently awarded Phase IV to integrate the fuel processor and SOFC into a system complete with controls and associated balance of plant components. Sulfur levels within JP8 (up to 600 ppm) far exceed diesel, ethanol, and biodiesel fuels; therefore sulfur management of these fuels is not of concern. Testing has been conducted with LPG that contains a variety of sulfur compounds different than those present in natural gas. This testing has proven that desulfurization can be accomplished with similar materials and approach.

Vaporization

Vaporization of liquid fuels such as ethanol or biodiesel can be accomplished in several ways. In the case of ethanol, which is soluble in water, the fuel can be pre-mixed with water prior to reformation in the fuel processor. This actually simplifies the process by allowing for the metering and mixing at a single liquid phase. Biodiesel vaporization will require larger amounts of water in order to maintain the proper steam to carbon ratio to allow for operation without carbon deposition occurring so as to not deactivate the catalyst within the reformer. This too can be easily achieved; however it presents challenges in separating out unconverted biodiesel fuel from the water to be recycled in the process.

Integrated Fueling System

A key deliverable in this TCEQ-sponsored project was to integrate the GTI fuel processor/reformer technology described above into an integrated, skid-mounted fueling system that is capable of providing fuel for hydrogen-fueled vehicle applications. GreenField teamed with GTI to build this system, using a design that it has successfully marketed in the CNG vehicle market. The fully integrated fueling system includes the reformer skid (reformer, water shift reactor, and pretreatment), a PSA for gas clean-up, on-board storage (3 Lincoln composite high-pressure tanks), and GreenField's proprietary hydrogen compressor. The system also includes a GTI technology-based system for dispensing that is more fully described below. During the course of this project, GreenField, a Texas-based organization, licensed GTI's dispensing and hydrogen processing technologies for commercialization.

The schematic at right (Figure 11) shows the basic process for generating, compressing, and dispensing hydrogen in the GTI/ GreenField integrated fueling station using Steam Methane Reformation.

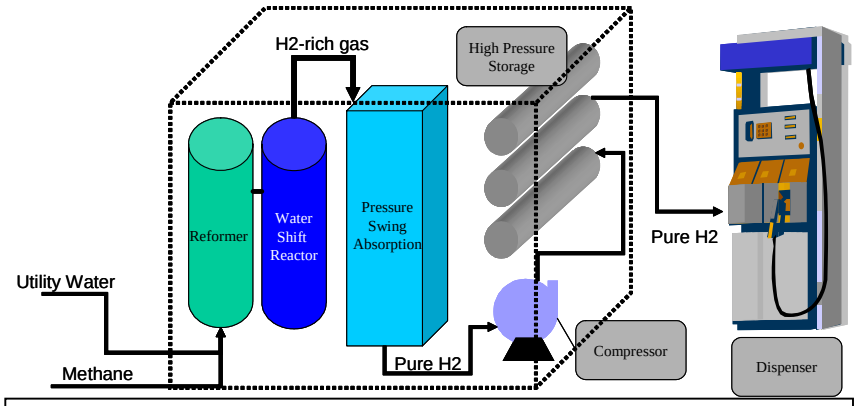

Figure 11

The skid-mounted design has the following attributes:

- Can be easily installed with little on-site engineering
- The fueling system may be moved in the future without re-engineering the station design
- The system is capable of remote operation. Power controls and a data acquisition system are included.
- The station may also be operated in "automatic mode" to pre-set pressures and hydrogen inventory.
- The system has a maximum dispensing flow rate of about 2-3 kg per minute – as fast as conventional liquid fueling stations.
- The system has been designed as a public-style dispenser, with card or security code access for users.

> Public-style Hydrogen Dispenser
> Fast fill performance
> Card access
> Incorporates GTI's patented dispenser control algorithm

GTI/GreenField H2 dispenser in Vancouver BC area

- The station is fully enclosed and meets all NFPA code requirements, so there is no need for a building enclosure to protect the equipment from the elements.
- GreenField's HydrogeView® Program system is included in the station design. HydrogenView® is loaded into a programmable web server that mounts in the system control panel. The system can then be monitored or used for educational purposes for anyone with computer access.

Energy Balance and CO_2 Footprint

This SMR-based system is highly efficient and has a relatively small "carbon footprint". This system is more efficient and generates a smaller carbon footprint than any other widely available method of providing hydrogen other than electrolysis that is powered by at least 70% renewable (wind or solar) electricity[3]. As shown in the energy balance diagram at right, the system attains approximately 83% thermal efficiency under optimal conditions. Nominal efficiency of 75% to 80% is anticipated in normal operating conditions.

Energy Balance Diagram for On-site Hydrogen Supply System

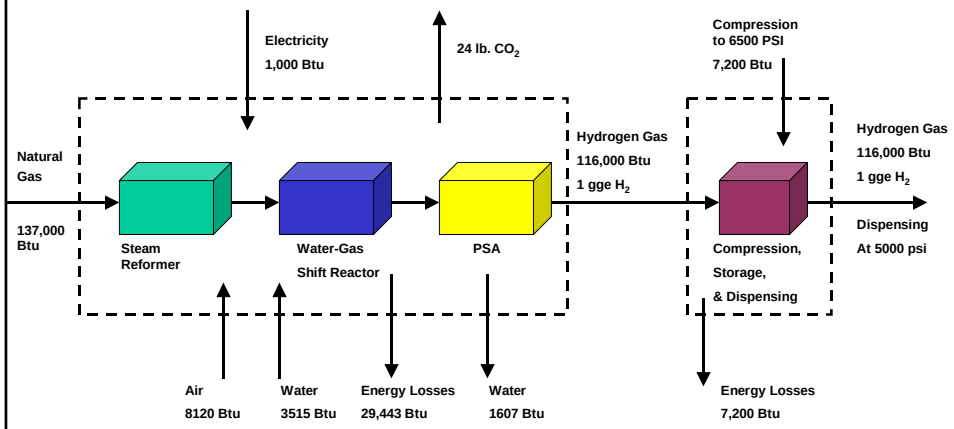

Sources: GTI Lab data for 50 kg/day hydrogen generation system
Compressor data from DOE, EERE estimates for forecourt electric compressor system
All Btu values shown in Lower Heating Value (LHV)
Data shown includes system with recycled PSA tail gases (CO_2, CO, CH_4, and H_2)

[3] California Hydrogen Blueprint, TIAX, LLC, March, 2005 (final draft document)

HydroFill™ Dispenser Technology

GTI has included its latest hydrogen dispensing technology in this project to fuel vehicles with hydrogen produced by the integrated fueling system. Through its DOE-sponsored hydrogen fueling station program, GTI has developed a patented approach called HydroFill™ to enable safe and complete filling of hydrogen vehicles. This technology has been verified in the course of an extensive testing program at temperatures from –25°C to 50°C. The GTI HydroFill™ algorithm is the most advanced fueling algorithm developed for hydrogen vehicles and the most extensively tested. The chart below shows GTI's HydroFill™ testing results, with fill performance accuracy that far exceeds any other technology in the market today.

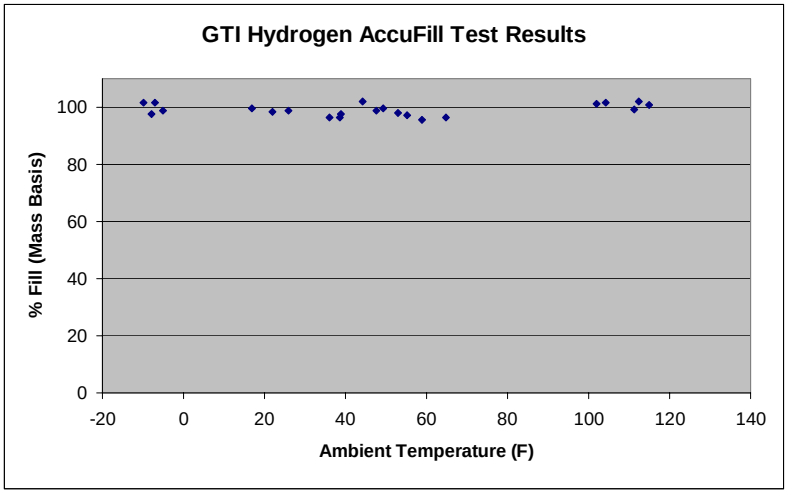

Hydrogen Dispenser built for TCEQ-sponsored project

This leading-edge work on proper filling of hydrogen cylinders was carried out in GTI's state-of-the-art test facility for high-pressure hydrogen. A notable attribute of this fueling technology is the lack of a need for electronic communication between the fuel dispenser and the vehicle. Alternative fueling systems typically require compatible dispenser to vehicle communications links that are subject to continual glitches. This is not required by the GTI HydroFill™ algorithm-based system.

The fueling dispenser technology was designed to be used by the general public and is unsurpassed in its "ease of operation." The system easily achieves a maximum flow rate of 2-3 kg per minute.

The table shown below includes test data for the dispenser that was built for the TCEQ-sponsored project. The data shows that fills for a variety of tank sizes are consistently within one or two percentage points of 100%.

TCEQ Project Dispenser PLC A

Date	Scale	Display	PLC	ProLink	% Error	Initial P	Cyl V	Fill Density	Rated Density	% Fill	
	(kg)	(kg)	(kg)	(kg)		(psia)	(ft3)	(lbs/ft3)	(lbs/ft3)		
6/18/2007	4.186	4.263	4.225	4.222	1.84	623	7.5	1.453	1.485	97.8	
6/19/2007	4.204	4.254	4.243	4.239	1.19	619	7.5	1.461	1.485	98.4	
6/20/2007	NA	4.476	4.466	4.462	NA	2588	14.5	1.495	1.485	100.7	Two cylinders
6/25/2007	NA	8.257	8.233	8.227	NA	552	14.5	1.437	1.485	96.8	Two cylinders
6/20/2007	0.564	0.567	0.563	0.563	0.53	4625	7.5	1.504	1.485	101.3	Top Off
6/27/2007	4.256	4.235	4.22	4.217	-0.49	623	7.5	1.457	1.485	98.1	
7/9/2007	4.15	4.19	4.17	4.16	0.96	584	7.5	1.431	1.485	96.4	Two Back to Back Fills
7/10/2007	0.906	0.941	0.916	0.915	3.86	4114	7.5	1.489	1.485	100.3	Top Off
7/10/2007	4.14	5.722	4.175	4.173	38.21	935	7.5	1.435	1.485	96.6	Incomplete fill due to T and supply (0.1kg)
7/12/2007	4.21	4.276	4.245	4.251	1.57	615	7.5	1.472	1.485	99.1	
7/16/2007	4.158	4.225	4.204	4.2	1.61	652	7.5	1.459	1.485	98.2	

Pictures and Descriptions of Additional System Components

3-D view of station skid without the surrounding enclosure. Major system components are labeled and described in the table below.

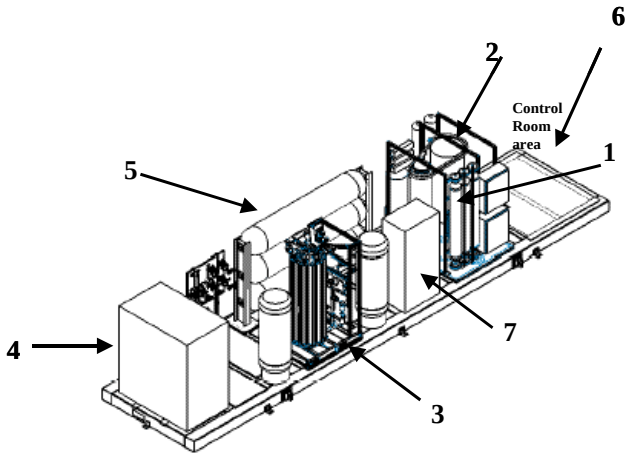

Item	Description	Comment
1	Gas Pretreatment system and water purification	These components are in a skid-mounted, fully enclosed hydrogen station that can be permanently sited on a 35' X 10' concrete pad or moved from time to time as needed.
2	Natural gas reformation system (SMR). This includes the gas pretreatment, reformer, water shift reactor, heat exchanger, and burner.	
3	Pressure swing absorption hydrogen purification system	
4	Hydrogen compression. Compresses hydrogen to 6600 psig for on-board storage.	
5	On-board hydrogen storage with capacity of approximately 50 kg of hydrogen at 7,500 psig	
6	Power controls system and data acquisition system	
7	Natural gas booster compressor. Needed to boost gas feed from distribution line pressures to 150 psig for reformer input pressure	
8	Hydrogen dispensing using GTI's HydroFill™ technology. Dispensing pressure will be 5,000 psig (not shown in diagram above).	The dispenser will be located on a separate fueling island pad, at least ten feet from the primary hydrogen station skid.
9	Hydrogen piping, valves, and connections required to tie the dispensing island to the hydrogen supply station, and the station to the local utilities	These are the only field installation tasks required once the station and dispenser are anchored in place.

System Compression

This photo shows the GreenField DM Compressor. This is a reciprocating design that is powered by electricity. It requires a 3-phase 480 current and has the following attributes:

- Oil –free design
- Volume throughput up to 20 SCFM
- 4-stage design with inlet pressures down to 70 psi
- Discharge pressure of 6600 psig.
- Automatic operation integrated with hydrogen skid system.

On-board System High-Pressure Storage

Three on-board high-pressure storage tanks are mounted on the integrated skid. The three tanks are controlled by the system shown at top left in the photo to efficiently dispense high pressure hydrogen through a stepped cascade process whereby each tank is depleted an a manner that maintains high pressures for fast fills while minimizing compressor run-time.

The tanks hold approximately 16 kilograms of hydrogen each. They are Type IV Lincoln composite tanks, i.e., they have a polymer lining with a carbon fiber wrapped outer layer. This makes them both light and very strong. They are pressure rated to 7500 psig maximum allowable operating pressure.

The composite Type IV cascade tank set weights about 2500 lbs compared to conventional steel tanks that weigh over 20,000 lbs.

Final System Assembly and Testing

The picture at the upper right shows the system in its initial testing for manual operation of system components in the GreenField fabrication facility in Richardson, Texas.

Note that the skid system was designed to allow room for maintenance personnel to enter the skid container to perform regular maintenance without having to dismantle the system.

The photo at lower right shows the fully assembled hydrogen supply station loaded on a flatbed for delivery to GTI's Des Plaines lab facilities. There it will undergo final testing and validation for its controls systems and to ensure that the system can operate in automatic mode.

Note that the control room is at the front of the skid and is separated from the remainder of the skid. This is required by NFPA 52. The system was built to conform to all NFPA 52 and NFPA 55 codes.

Hydrogen Fuel Cell Electric Hybrid Bus

A critical part of this project was the development of a fuel cell vehicle. Because the TERP program focuses on emissions reductions from mid to large-sized vehicles, it was important to develop a vehicle with a gross vehicle weight greater than 8500 lbs. Initially, GTI intended to convert a mid-size truck or van to a fuel cell vehicle and researched a number of "glider" options on which to build a fuel cell power train.

Soon after the project contract was in place GTI's initial vehicle development partner dropped out of the project. This provided GTI with an opportunity to expand its search for vehicle options into a number of applications, ranging from military base vehicles to airport ground service fleets. While discussing the project with a number of potential in-state and out-of-state partners, GTI developed a requirements list for vehicle options:

- The vehicle must match an application or program that exists at or near the future location of the hydrogen fueling station.
- The vehicle must exceed 8500 GVW.
- The vehicle must be all or partially powered by a fuel cell power train.
- The vehicle would preferable by "road-ready" and able to demonstrate commercial potential.
- The vehicle "host" must have the technical ability to operate and maintain a new-technology vehicle that might have unproven reliability.
- The vehicle "host" must be a Texas-based organization.
- The vehicle "host" would preferably be in one of the State's non-attainment areas.
- The vehicle "host" would need some internally-sourced funding to allow for the expense of storing and operating a fuel cell vehicle.

After meeting with literally dozens of organizations, the University of Texas, Center for Electromechanics (UT-CEM) emerged as an ideal partner for operating of the State's first hydrogen-fueled vehicle. Although Austin is not a non-attainment area, UT-CEM met or exceeded all of the program requirements for partnering and has provided critical insight and technical support for the project.

UT-CEM and/or GTI met with all credible fuel cell vehicle providers in North America over the course of several months and ultimately decided to co-develop a fuel cell bus with Ebus, Inc. of Downey California. The Ebus product fit both the UT-CEM FTA advanced vehicle program requirements and it fit TCEQ program requirements. The product cost was also within budget for UT-CEM and GTI.

The Ebus product is a 22', thirty-two passenger fuel cell – electric battery hybrid bus. The following charts detail the bus mechanical and performance specifications:

Bus Passenger Capacity		
Total number of passengers bus can accommodate seated	**22**	**Passengers**
Total number of passengers bus can accommodate seated plus standing	**32**	**Passengers**
GVWR fully loaded with passengers and fuel	**19,500**	**lbs**
Bus Locomotive Energy Consumption and Range		
Bus energy consumption without air conditioner	**1**	**kWh per mile**
Bus energy consumption with air conditioner	**1.3**	**kWh per mile**
Vehicle range fully loaded with fuel cell, with air conditioner use	**190**	**Miles**

Hydrogen Storage		
Total on-board hydrogen storage on the EBUS	**16**	**kg**
Hydrogen storage pressure	**5,000**	**psi**
Fuel Cell		
Weight of the fuel cell and BOP excluding the hydrogen storage weight	**300**	**lbs**
Fuel cell maximum continuous power output (19.1 kW?)	**19.1**	**kW**
Total usable energy output from the fuel cell based upon on-board stored hydrogen	**200**	**kWh**
Hours of operation of fuel cell at maximum continuous power output based upon on-board stored hydrogen	**12**	**hrs**
Battery		
Battery type	**Nickel Cadmium**	
Battery manufacturer and model number	**SAFT STM5-100MRE**	
Number of battery banks	**2**	**banks**
Weight of a battery bank	**3,500**	**lbs**
Number of individual batteries in one battery bank	**50**	**batteries**
Battery energy storage and life rating		
Total energy storage	**60**	**kWh**
Usable energy from one charge	**48**	**kWh**
Depth of discharge associated with extracting usable energy from one charge (from above)	**80**	**%**
Life cycle rating at depth of discharge associated with extracting usable energy from one charge (from above)	**2,000**	**Cycles**
Normal operating battery voltage	**300**	**V**

The Ebus is a battery-dominant fuel cell hybrid bus, i.e., the fuel cell is used to maintain the battery charge and to supply peak electrical power for transitional loads. The bus is outfitted with regenerative braking, and is fully ADA compliant.

The fuel cell chosen is a Ballard proton exchange membrane (PEM) 19.3 kW unit with a sealed, pressurized stack to increase performance of the fuel cell system.

This photo shows the “Texas” bus with tank storage above the passenger compartment exposed and the two 8 kg hydrogen tanks installed. 60 Kwh of battery banks are installed beneath the passenger compartment and must be recharged daily for good battery maintenance.

The bus has a top speed of 45 MPH and it has an on-board AC unit at 12,000 Btu’s (a requirement for operations in Texas).

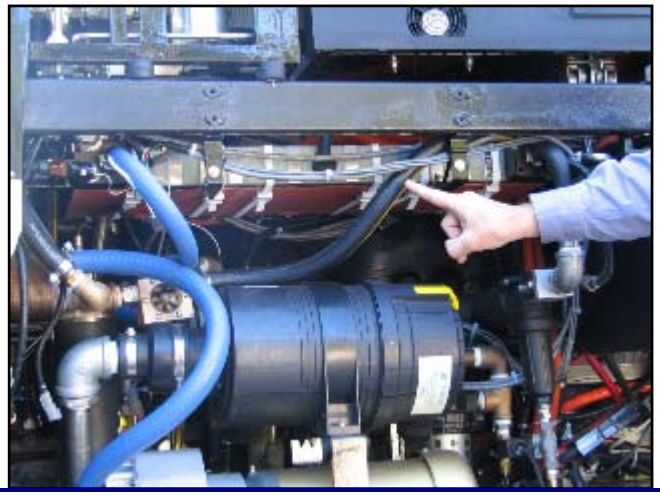

This photo shows the location of the Ballard fuel cell at the rear compartment of the bus. The fuel cell has a power rating of 19.3kW. The fuel cell stack is pressurized, which improves stack efficiency.

Note that the fuel cell is about the size of a briefcase.

The large cylinder object below the fuel cell is the primary air filter and compressor for the air flow.

Pictures and Descriptions of Major Bus Components

Battery Packs

- Four sets total on bus, 2 on each side in series, the two sides in parallel
- 50 batteries per bank, 6V each
- Nominal 300V
- Nominal 100Ahr
- Energy stored 60kWhr (total)
- 900lbs/pack (X4)
- Bay 25"D x 25"H x 55"W

Traction Drive Motor

- 100hp nominal
- 174hp peak
- Air-cooled air gap
- 27:53 gear ratio (1:1.96)

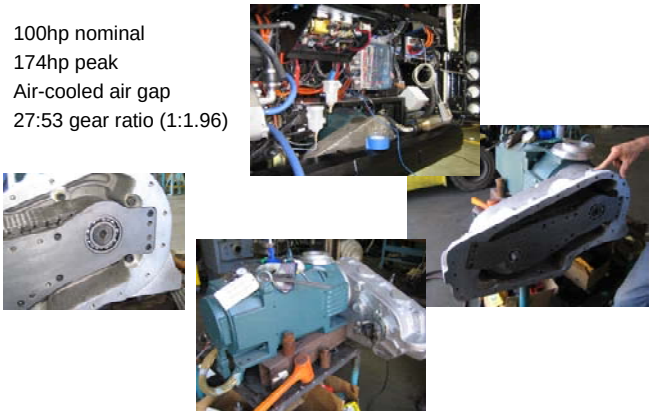

Back of Bus

Fuel Cell System (1)

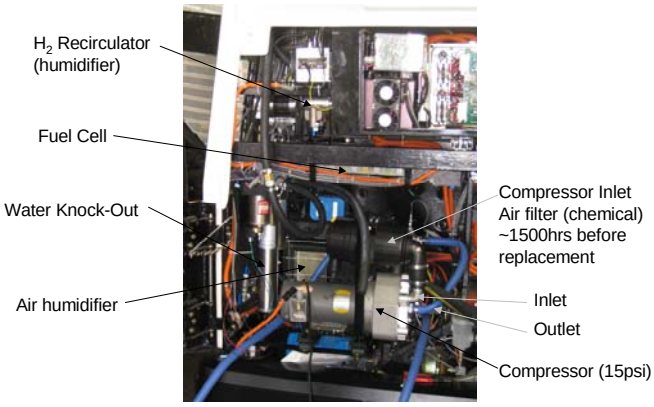

Fuel Cell System (2)

Outlet manifold

Inlet manifold

Water ~10psi

Air ~11psi

H2~17psi (7psi higher than water)

Conductivity Sensor 50microS/cm

Fuel Cell Stack (19.1kW peak, typically 16-17kW w/ aux)

Fuel Cell System (3)

Particulate Air filter (after compressor)

Air flow direction

Fuel Cell System (4)

Side of Fuel Cell

Can check voltage between stacks (100stacks, ~1.2Vmaxper, nominal 108-110V total)

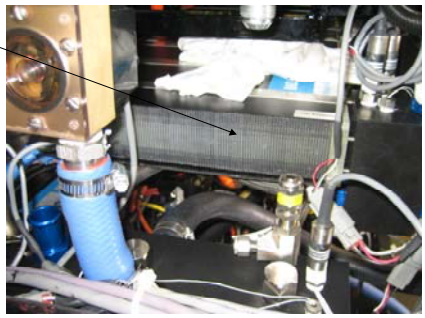

Fuel Cell System (5)

- Intercooler
- Matches air and hydrogen temp (70C water exhaust)

- H2 pressure regulator
  - Tank 5000psi (max)
  - Regulated to 50-55psi
  - Further regulated at back of bus to ~17psi (max of 20psi)

H2 Tanks

Inside of Bus

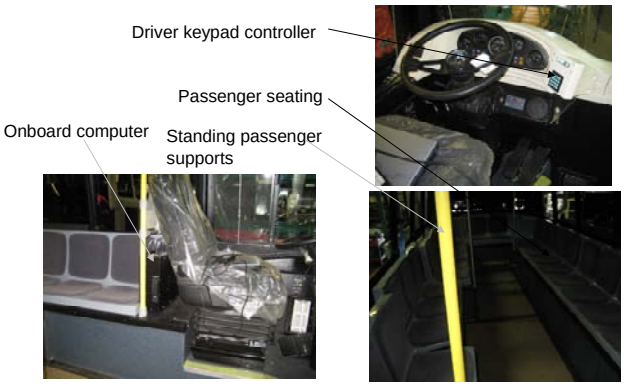

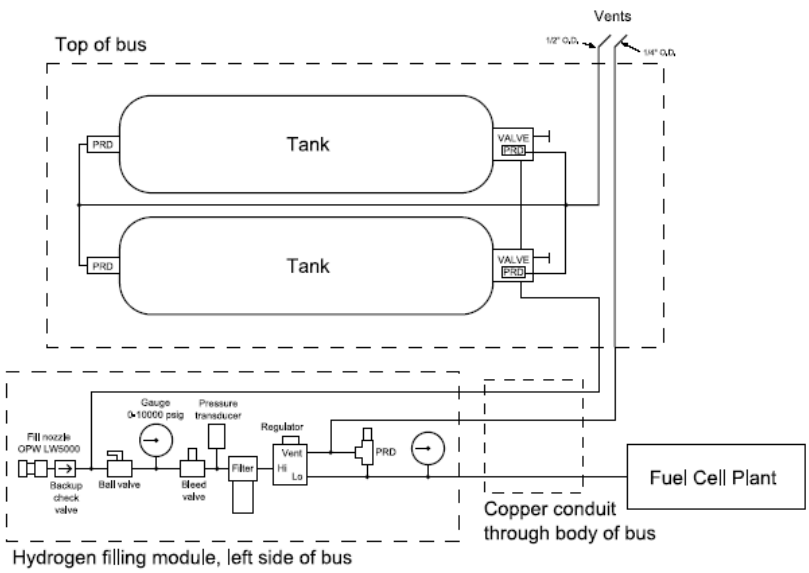

Diagram shows high-pressure plumbing for the hydrogen fueling system and on-board storage components

Fully completed, and fully operational fuel cell electric hybrid Ebus

Another view of Texas' first hydrogen fuel cell passenger vehicle

(Decals and painting will be added once the bus arrives in Austin)

Project Conclusion

The Tex-PATH project represents a significant step toward the introduction and permanent operation of fuel cell vehicles in the State of Texas. The partners have received dozens of inquiries on the technologies represented in this project, verifying that there is a demand for hydrogen infrastructure and vehicles.

The Ebus will soon be delivered to Austin to be housed at the UT-CEM facility at the JJ Pickle Center. There it will be maintained until the fueling station can be installed. The bus has been ready for some time, however without a hydrogen supply, it was better for the bus to remain at the manufacturer's facility in Los Angeles where a hydrogen infrastructure exists. Hydrogen is needed not just for fuel, but to maintain the fuel cell at peak performance.

The fueling station is at GTI's facility in Des Plaines, Illinois, where it will continue to undergo testing until funding is obtained to allow for site preparation, delivery, installation, and commissioning the station at the deployment site. Controls testing and verification will continue well after the system has been installed.

The project partners are currently pursuing multiple paths for funding the next phase of the project. Government and corporate entities have expressed interest and the project partners are confident that the station will eventually be installed in Austin.

While this project represents a major milestone, many of the demonstration and verification goals for the technologies represented in this project cannot be fully met until the next, demonstration phase commences. Deployment of both the bus and the fueling station will be the next major goal for the partners, followed by a demonstration program that will continue as long as the vehicle and infrastructure are in place. The partners plan to build upon the program adding more vehicles and updating the fueling station to include technology improvements. GTI, UT-CEM and their technology partners are committed to seeing the successful launch of hydrogen vehicle and infrastructure technology in the State of Texas. The Tex-PATH project has been an important first step.