NTRD Program Disclaimers

1. Disclaimer of Endorsement:

The posting herein of progress reports and final reports provided to TCEQ by its NTRD Grant Agreement recipients does not necessarily constitute or imply an endorsement, recommendation, or favoring by TCEQ or the State of Texas. The views and opinions expressed in said reports do not necessarily state or reflect those of TCEQ or the State of Texas, and shall not be used for advertising or product endorsement purposes.

2. Disclaimer of Liability:

The posting herein of progress reports and final reports provided to TCEQ by its NTRD Grant Agreement recipients does not constitute by TCEQ or the State of Texas the making of any warranty, express or implied, including the warranties of merchantability and fitness for a particular purpose, and such entities do not assume any legal liability or responsibility for the accuracy, completeness, or usefulness of any information,apparatus, product, or process disclosed, or represent that its use would not infringe privately owned rights.

New Technology Research & Development Program
Grant Contract 582-5-70807-0005

Task 2 Deliverable Report
Final Report

The preparation of this report is based on work funded in part
by the State of Texas through a Grant from the
Texas Commission on Environmental Quality.

New Technology Research & Development Program
Grant Contract 582-5-70807-0005

Task #2 Deliverable

System Modeling and Component Testing
for the
Propane Fuel Cell Auxiliary Power Unit

Submitted by:
Teledyne Energy Systems, Inc.
and
Clean Fuel Generation, LLC

The preparation of this report is based on work funded in part
by the State of Texas through a Grant from the
Texas Commission on Environmental Quality.

UNIT SYMBOLS

Symbol	Units
cc/min	cubic centimeters per minute
cm^2	square centimeter
ft^3	cubic feet
g/min	gram per minute
gal	gallon
gph	gallon per hour
in^2	square inch
kW	kilowatt
kWe	kilowatt electric
lbs	pounds
ltr	liter
mA/cm^2	milliamps per square centimeter
ml/min	milliliter per minute
psig	pounds per square inch gauge
scfm	standard* cubic feet per minute
slm	standard* liter per minute
sm^3	standard* cubic meter
Vac	volts AC
Vdc	volts DC
Wh	Watt hours
^oC	degrees Celsius
^oF	degrees Fahrenheit

***** standard conditions are defined as 20 ^oC and 1 atmosphere

INTRODUCTION

This report is the product of a collaboration between the State of Texas, Teledyne Energy Systems, Inc., and Clean Fuel Generation, LLC, to produce a model of an integrated fuel cell system, fueled by propane, that could be utilized as an auxiliary power unit for trucks. Teledyne Energy Systems, Inc. has had the responsibility for the research, development and technological contributions relating to the fuel cell stack and the system integration. The research, development and technological contributions relating to the fuel processor (reformer and purifier) and system integration have been the responsibility of Clean Fuel Generation, LLC.

PROJECT GOAL

The goal of this project is to develop a fuel cell based auxiliary power unit, APU, able to provide stationary power for long haul trucks. During rest periods, when not transporting freight, trucks typically idle the main diesel engine to supply electrical power for what is typically known as "hotel power" for driver comfort and convenience. Operating a large diesel engine at this condition is inefficient and a source of significant air pollution.

A variety of regulations and alternatives are being proposed to address the situation. . Municipal and state governments are passing, or considering passing, legislation to restrict or prohibit truck idling during rest periods. Alternative electrical power sources for hotel power are being considered in an effort to save fuel and reduce air emissions during off-road periods.

This project proposes the use of propane as an energy source for providing long haul trucking, hotel power. Propane is utilized with a fuel reformer and a hydrogen fuel cell system to provide an efficient and low emission source of electrical power providing a dramatic reduction in NO_x and SO_x.

TASK 1: REVIEW

In Task 1, technical guidelines for the fuel cell auxiliary power unit (APU) system were developed by team members Teledyne Energy Systems, Inc. (TESI), Clean Fuel Generation (CFG), and the Railroad Commission of Texas (RRC). The specifications (noted on the following page) including the capacity and features of the system were derived through literature searches, discussion with a truck dealer, as well as technical discussions between TESI & CFG. The resulting APU system specification provides the technical targets for the design, modeling, and testing for this phase of the project.

TASK 2: PURPOSE

The major objective of task 2 of this project is to develop an overall computational model of the propane fuel cell system to analyze the process and guide the design of the system hardware. The model is used to define the overall process conditions for converting propane to electric power.

The model allows for parametric studies to be performed, optimizing process conditions for the best efficiency and lowest environmental impact. The reformer and fuel cell processes can be determined, defining the input feed streams, operating conditions and output exhaust streams. The major system components for supporting the overall conversion can be selected and sized.

Task 2 includes the purchase, fabrication and testing of the some of the major system components. The reformer, hydrogen purifier, and fuel cell stack have been built and tested. Some of the major components supporting the reformer and fuel cell have been purchased for testing under system operating conditions.

APPROACH

Task 2 of the contract requires TESI to develop a comprehensive simulation model. This is a multi-process simulation involving an array of process algorithms. This model was to be built on process simulation software used for previous work with natural gas fueled PEM systems. TESI no longer has access to this software. With approval from the TCEQ Team Leader Morris Brown, TESI and CFG have proceeded with modeling the individual processes and linking them together manually to carry out overall parametric computations to make hardware selections.

Process conditions, component selection, and sizing results from the computational model must address the design goals for the APU. The most fundamental design goal is for the APU to meet the electrical load profile required for the application. This requires the electrical output of the system to satisfy the electrical load at all times. If the generation process cannot respond effectively to peak electrical demands, then an energy storage device must be incorporated into the system. The storage is energized at lower electrical demands to be used at higher demand. Likewise, if the generation process cannot turndown sufficiently at low demand, energy storage must be incorporated to prevent excess energy from being wasted.

Low environmental emissions are important for the APU application. While meeting the electrical demand, the system must provide minimal air emissions. The goal is for air emissions, particularly NOx, to be below regulations being proposed for truck APU.

Simple operation is important for acceptance of propane fuel cell system for this application. A design goal for the APU is to require only propane refueling for operation. The reforming process requires water as a supplemental source of hydrogen. However, the fuel cell produces water that can be used in the reforming process. The design goal is to provide the equipment and define the conditions that allow the system to operate without requiring additional water input during refueling.

A summary of the physical and operational design goals established under Task 1 of this project are listed below.

APU System Specifications:

- Fuel: Propane
- Fuel cell type: PEM (proton exchange membrane)
- Power: 3 kWe (continuous), 5 kWe (peak) system, providing both (12 and 24) Vdc and 115 Vac (square sine wave) outputs
- Thermal energy: 15,000 Btu for engine warming/cab heating
- System dimensions: approximately 36 in L x 24 in H x 24 in W (not including propane tank or fluids). (System volume of ~ 12 ft^3.)
- System weight: not to exceed 300 lbs. (excluding propane tank, fuel and heat-exchanger.)
- NOx & SOx Emissions: limits to be established.
- The system will be able to tolerate daily on/off cycling
- Operating temperature range: - 40°C (- 40°F) to + 50°C (122°F)
- Storage temperature range: + 2°C (36°F) to + 50°C (122°F)
- Shock & vibration: the system will be able to tolerate the shock and vibration of normal truck operation including minor impacts.
- The system will tolerate the tilting encountered during normal truck operation (up to 9 degrees).
- The system will have a goal of water neutrality (the APU will produce all of its own water needs and a separate water supply will not be required).
- The system will be equipped with redundant safety equipment to insure truck occupants and public safety.
- The system parts which require maintenance will be readily and easily accessible and replaceable to minimize downtime.

- The APU system will only the require truck operator to turn system on/off when required. All other system operation will be handled by an automated control system.

Design of the completed system is dependent on the creation of the computational model. The overall system has been divided into a series of separate processes. A computational method has been developed for each of these individual processes. These computational methods or models allow parametric studies to be performed for each individual process. The models are based on the governing equations for the process. When empirical data is available, it is used by the model to support the computational method and provide realistic results.

The individual process models are linked together manually to provide a method for analyzing the overall system. Output results from leading processes are manually input into succeeding processes for calculation. Iterations on the individual process and the overall system can be performed for parametric and trade-off studies.

Component selection is based on the most energy and cost efficient component to satisfy the individual process requirements. Component sizing is decided based on the process trade-offs for the overall system

Functional testing has been performed on the most critical components selected. These components have been tested under conditions simulating overall system operation.

ELECTRICAL LOAD

A typical long haul truck APU load profile presented at the 2004 Fuel Cell Seminar has been selected to define the base power requirement for the typical hotel load. The load profile was used by TIAX as part a study on the use of a solid oxide fuel cell APU for the long haul truck application. All the power requirements are assumed to be electrically driven. The 5 hour profile includes individual electrical loads for kitchen equipment, entertainment equipment and space conditioning equipment. Satisfying this 5 hour load profile is the basis for this analysis and the resulting propane fuel cell APU design. A chart of the load profile is shown in Figure 1. The average electrical load over the 5 hour period is 2.7 kW with peak loads of 5.3 kW. The total energy requirement for a single load profile cycle is 13.4 kWh.

Figure 1 – APU Electrical Load Profile

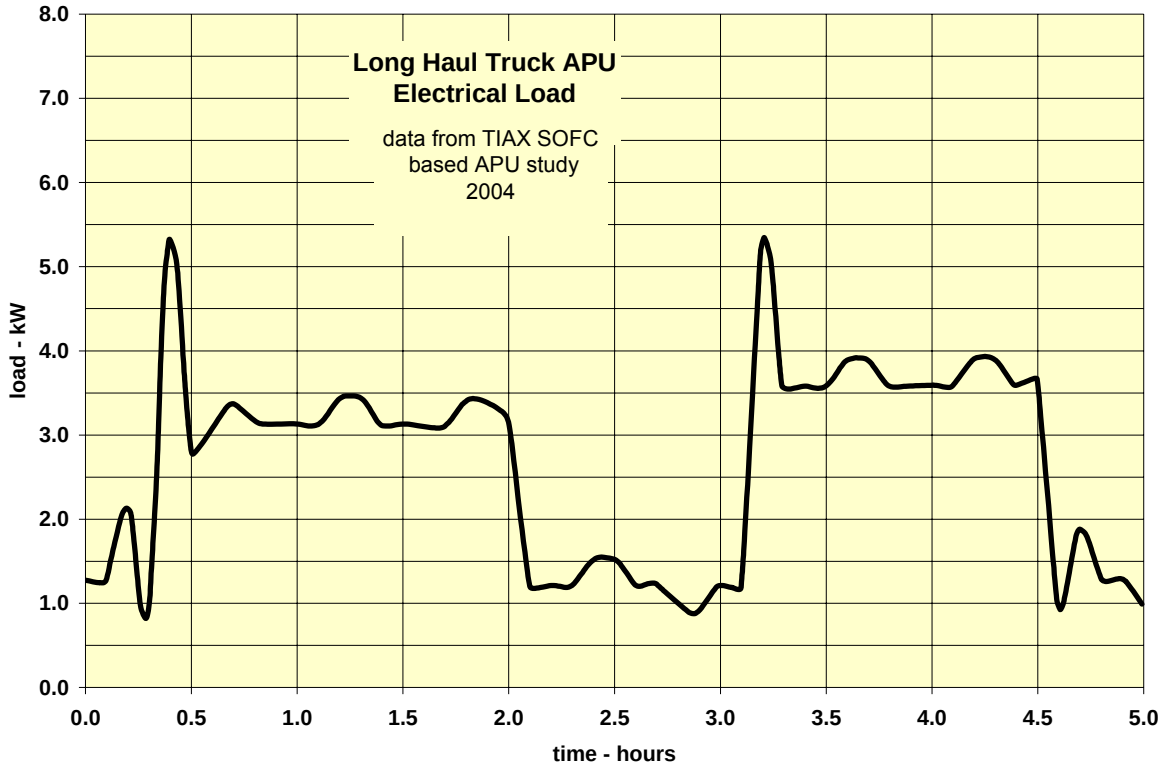

In addition to the hotel load, Figure 1 includes the ancillary power for the components needed to support the fuel cell system. This includes power for the pumps, compressors, fans and controls. The individual ancillary loads are based on final component selections and the total load is considered a constant add-on through the 5 hour load profile. The intermittent ancillary load for the hydrogen compressor and cooling fan has been averaged over the 5 hour profile. Table 1 lists the individual ancillary electrical loads.

Table 1 – Ancillary Power Requirements

Component	Power - Watts
reformer air compressor	138
reactant air compressor	250
de-mineralized water pump	130
hydrogen circulator	36
coolant pump	48
hydrogen compressor	40
heat exchanger/condenser fan	108
process controls	50

SYSTEM DESIGN

Fuel Cell Stack

The fuel cell selected for this application is a standard, low temperature, proton exchange membrane (PEM) stack. The stack consumes hydrogen produced by the propane reforming process and oxygen from ambient air supplied by a separate compressor. The multi-cell PEM stack contains fluorinated, acid polymer membranes. The membranes must be kept hydrated to maintain high ion conductivity at low temperature. A platinum catalyst is used at the cell electrodes to initiate the reactions at the anode (hydrogen side) and cathode (oxygen side) of each cell. At the anode the oxidation reaction causes an electron loss from the hydrogen reactant.

$$H_2 \rightarrow 2H+ + 2e-$$

At the cathode the reduction reaction gains electrons in the formation of water.

$$\tfrac{1}{2}O_2 + 2H+ + 2e- \rightarrow H_2O$$

The overall reaction produces only water.

$$H_2 + \tfrac{1}{2}O_2 \rightarrow H_2O$$

The reaction produces two moles of electrons for every mole of hydrogen consumed. A mole of electrons contains Avogadro's number of electrons and carries the electrical charge of Faraday's number of coulombs. A mole of hydrogen is equal to 24 liters of gas at the standard conditions of atmospheric pressure and 20 deg C. These constants can be combined to show a consumption constant of 0.00748 standard liters of hydrogen for each amp produced by each cell of the fuel cell. This consumption constant is based on the stoichiometric or balanced coefficients of the chemical equation for the production of water. The consumption constant for oxygen and a constant for the amount of water produced can also be derived from the stoichiometrically balanced reaction equations. Air contains approximately 21% oxygen by volume. The stoichiometric coefficient for the air consumption in a fuel cell is 4.76 times the oxygen requirement.

The ideal or the reversible cell voltage, E_{rev}, for the overall reaction is determined by the available free energy is:

$$E_{rev} = G / (n*F)$$

G is the Gibbs free energy available for the reaction, n is the number of electrons transferred (2 for the water reaction) and F is the Faraday constant. The reversible voltage for the reaction producing liquid water at ambient conditions is 1.23 Vdc.

The total reactant energy input available for the reaction can also be expressed as a voltage equivalent, E_{in}:

$$E_{in} = H / (n*F)$$

H is the enthalpy available for the reaction. The equivalent voltage for the converting all the enthalpy of the reactants to liquid water (high heating value) at ambient conditions is 1.48 Vdc. This voltage is useful when compared to the actual cell voltage in considering how efficiently the fuel cell has utilized the reactants and in determining the waste heat produced. The waste heat of the reaction is the voltage inefficiency, $E_{in} - E_{actual}$, times the current. When the product of the reactants is water vapor (low heating value), the equivalent voltage for the available energy is 1.25 Vdc. This value is used for a system in which the water created at the cathode is exhausted as water vapor.

The actual cell voltage is less than ideal largely due to activation losses at the electrodes and internal resistance losses within the cell structure. The actual cell voltage for a given cell configuration is defined by the polarization curve for the specific configuration. The polarization curve for the cell configuration selected for this project is shown in Figure 2.

Figure 2 – Cell Polarization Curve

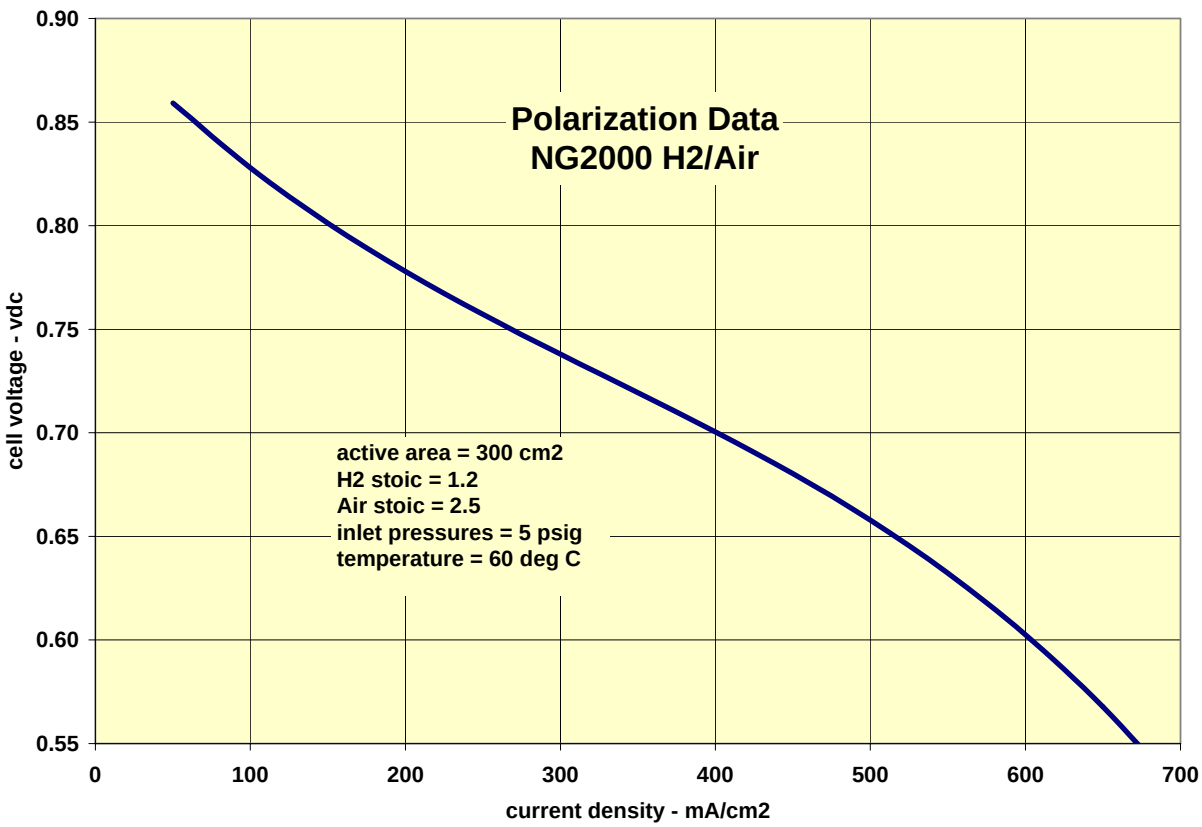

The polarization curve establishes the operating conditions for a specific fuel cell application. The voltage requirement for the application defines the electrical current necessary to meet the power demand. The resulting current and the active area of the fuel cell determine the current density. Higher current densities result in lower cell voltages and lower efficiency. Lower current densities can be achieved with larger active areas, resulting in higher voltages and higher efficiency. The selection of the active cell area for a given stack voltage and stack power

benefits stack efficiency but requires increased weight, volume and cost. The final selection of cell active area involves a trade study of stack efficiency versus these other features.

The expected power range of the fuel cell is also considered in the selection of active area. If high currents at peak loads are anticipated, the resulting drop in cell voltage at the high current density must be considered so that the cell voltage does not drop below a safe minimum. The minimum cell voltage for a hydrogen/air PEM fuel cell stack is typically about 0.6 Vdc.

Considering a peak load of 5.3 kW, a minimum cell voltage of 0.6 Vdc and a discrete number of active area formats to choose from, a configuration with an active area of 300 cm^2 and 50 cells has been selected. A nominal output voltage of 36 Vdc has been selected for input to the power inverter for conversion to 120 Vac. The operating conditions calculated for fuel cell stack are shown Table 2.

Table 2 – Fuel Cell Stack Operating Conditions

Specification	Nominal	Peak
power output	3.7 kW	5.3 kW
voltage output	36 Vdc	31 Vdc
current output	102 Amps	170 Amps
current density	340 mA/cm^2	568 mA/cm^2
H_2 consumption	38 slm	64 slm
air consumption	91 slm	152 slm
water produced	29 g/min	48 g/min
heat produced	3.9 kW	7.4 kW

A hydrogen demand profile for the load profile shown in Figure 1 can be determined using the hydrogen consumption constant (assuming 100% current utilization) and the polarization data for the fuel cell. The hydrogen demand over the 5 hour period is shown along with the electrical load profile in Figure 3. Note that the hydrogen demand is directly proportional to the electrical current requirement, not the electrical load. At peak demand the hydrogen demand is proportionally higher than the electrical load because the reduced stack voltage requires proportionally higher current and equally more hydrogen.

Figure 3 – Electrical Load and Hydrogen Demand Profiles

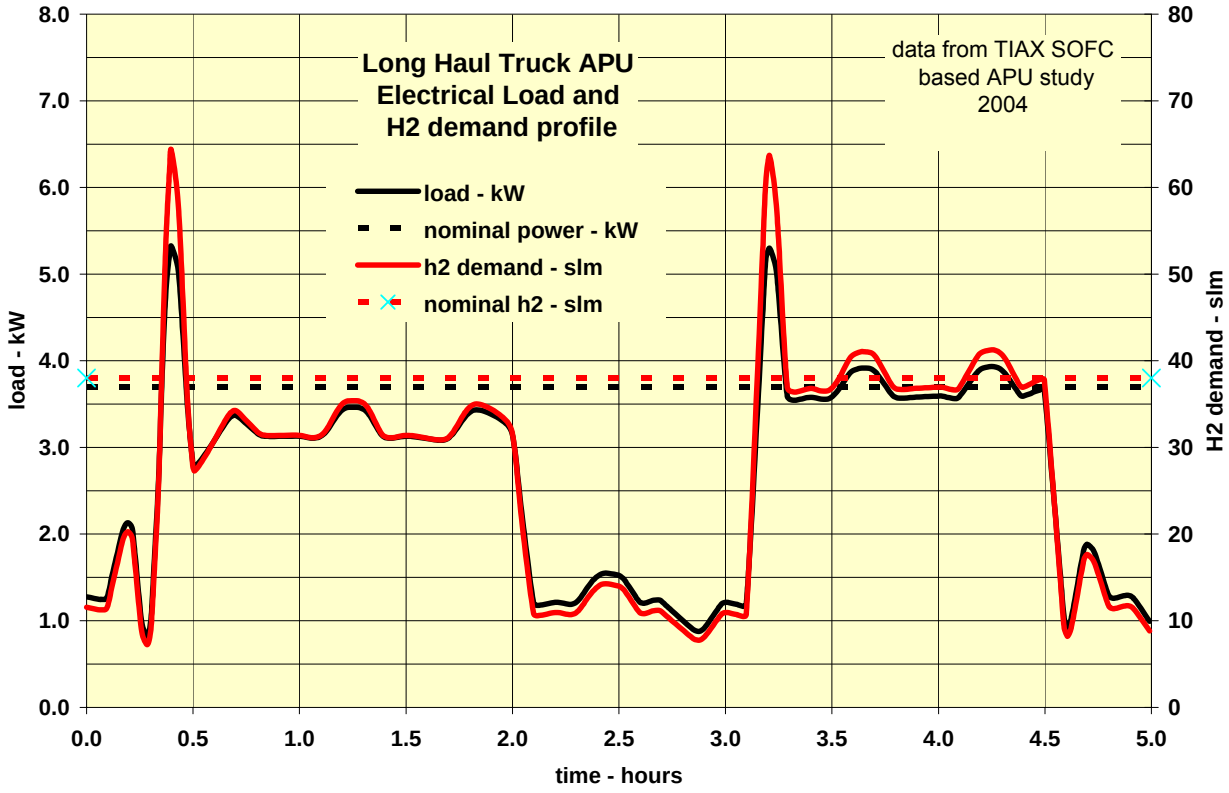

Fuel Cell Subsystems

The fuel cell stack is directly supported by three subsystem circuits supplying reactant hydrogen, humidifying reactant air, and removing waste heat. A fourth subsystem separates and collects the product water from the fuel cell stack for humidification of the reactant air and return feed water to the reformer. The water returned to the reformer enters the process again to become part of the hydrogen supply for the fuel cell stack.

Hydrogen Supply Subsystem

A schematic of the hydrogen supply subsystem operating at nominal conditions is shown in Figure 4. Input pressure to the stack is controlled to 5 psig by forward pressure regulator FPR. A solenoid supply valve provides a means of isolating the hydrogen supply to the stack. The hydrogen inlet flow to the FPR is controlled by the consumption rate of the stack. The hydrogen circulator re-circulates an additional 20 slm of hydrogen for delivery to the stack. This provides a stoichiometric ratio to the stack of about 1.5 at nominal load and 1.3 at peak load.

A water separator at the anode exit removes any liquid water accumulated in the hydrogen reactant. This water will be returned to the reformer for processing. The solenoid purge valve provides a means of purging the hydrogen subsystem. A periodic "burp" is used to minimize impurities that may accumulate in the reactant hydrogen. The check valve CV prevents backflow from the atmosphere into the hydrogen subsystem.

Figure 4 – Hydrogen Supply

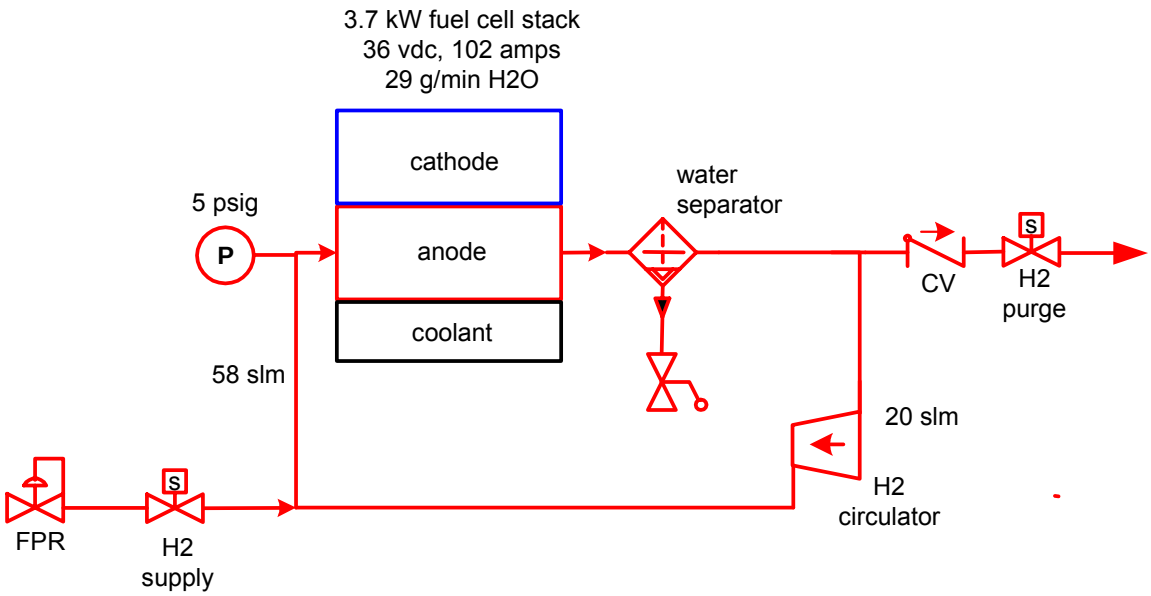

Air Supply Subsystem

Figure 5 shows a schematic of the air supply subsystem operating at nominal conditions. Air is drawn through a filter and supplied to the stack by a compressor. The air pressure for the stack is controlled by backpressure regulator BPR set at 5 psig. The compressor supplies air to the stack at a stoichiometric ratio of about 2.5 at nominal load and 1.5 at peak load.

Before entering the cathode section of the stack the air flows through a liquid water to air humidifier. The humidifier provides the moisture required to hydrate the PEM membrane and prevent the membranes from drying out. Air leaves the stack depleted of a stoichiometric volume of oxygen and saturated with water vapor. An ambient air cooled condenser and water trap are located downstream of the stack remove as much water as the ambient air conditions will allow. This recovered water is available for reactant air humidification and reformer feed water.

Figure 5 – Air Supply

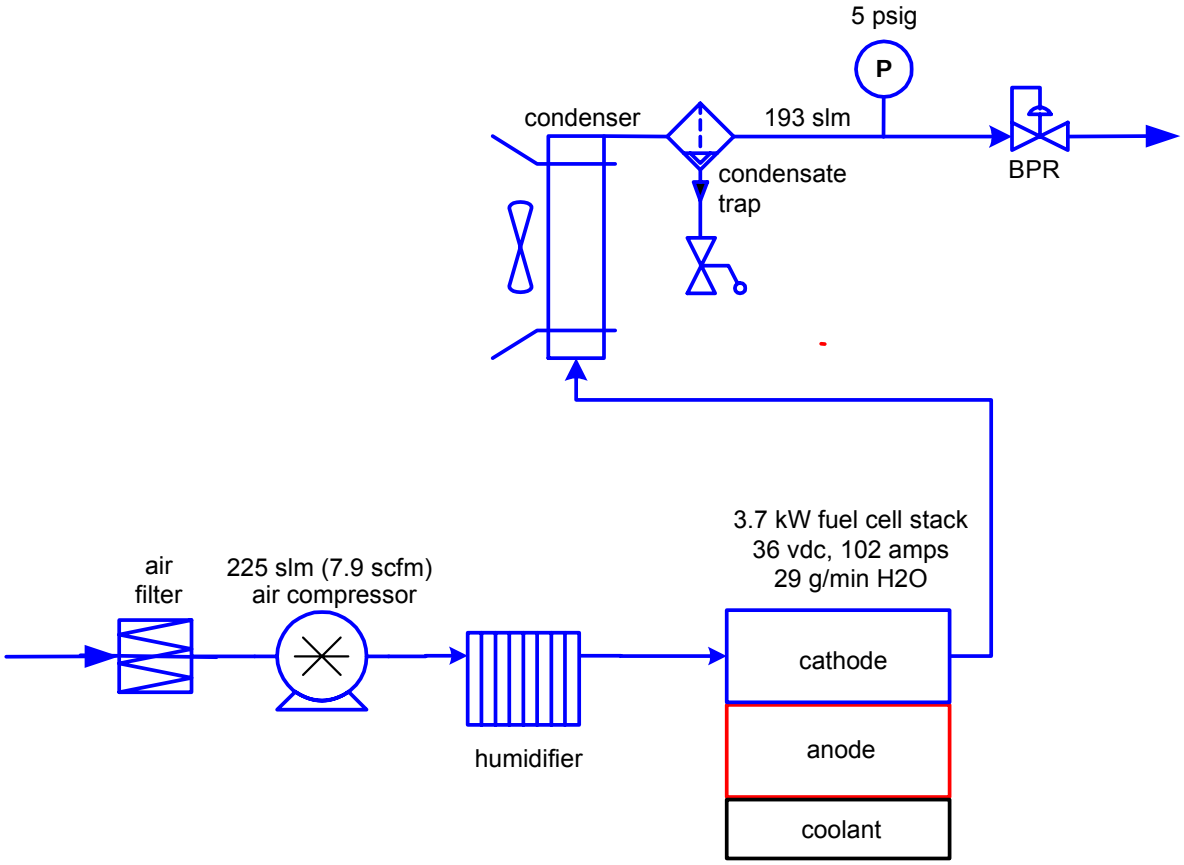

Coolant Subsystem

A separate, closed cooling loop for removing the waste heat from the fuel cell stack includes a 4 liter coolant tank, a coolant pump and an ambient air cooled heat exchanger. The components are shown in Figure 6. A centrifugal pump circulates the coolant from the tank and through the heat exchanger. The fan on the heat exchanger is controlled to supply air flow and enough heat removal to provide a coolant temperature of 60° C entering the stack. The coolant flows through separate cooling channels in the stack at a flow rate sufficient to allow a maximum temperature rise of 3° C through the stack. The coolant circulates through separate channels in the humidifier to maintain the required temperature and the corresponding vapor pressure for humidification before returning to the tank.

Figure 6 – Coolant Loop

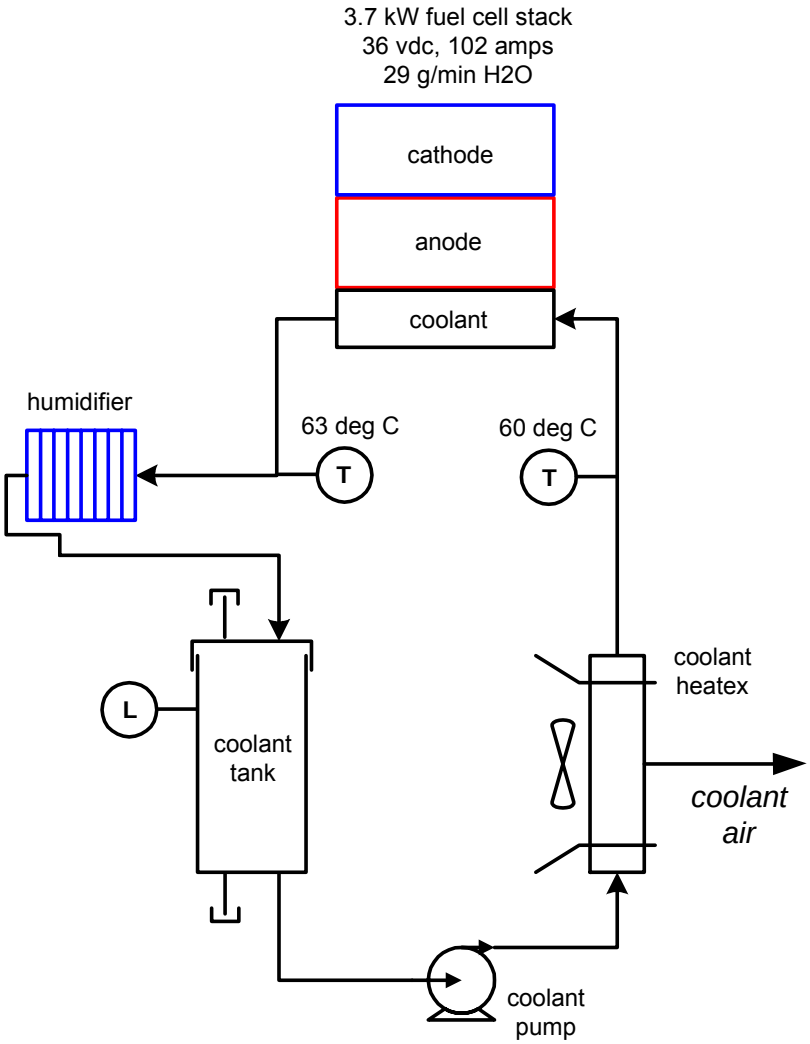

Water Collection Subsystem

A major goal of the propane fuel cell system design is to allow system operation without the need to add water during refueling. Water provides an additional source of hydrogen and oxygen for the reforming process. Water is produced as a result of the electrochemical reaction in the fuel cell. The goal is to design a system which will capture enough water in the fuel cell exhaust to supply the reformer feed water requirement.

Figure 7 shows the components involved in collecting and returning the fuel cell product water to the reforming process. Water collected from the air condenser and condensate trap, and from hydrogen water separator drain into a 4 liter tank. The tank drains into the humidifier, providing liquid water for reactant air humidification. A high pressure injection pump pumps the water into the reformer. When the water supply exceeds the demand the tank will fill to a level to open the overflow solenoid valve.

Figure 7 – Water Collection Subsystem

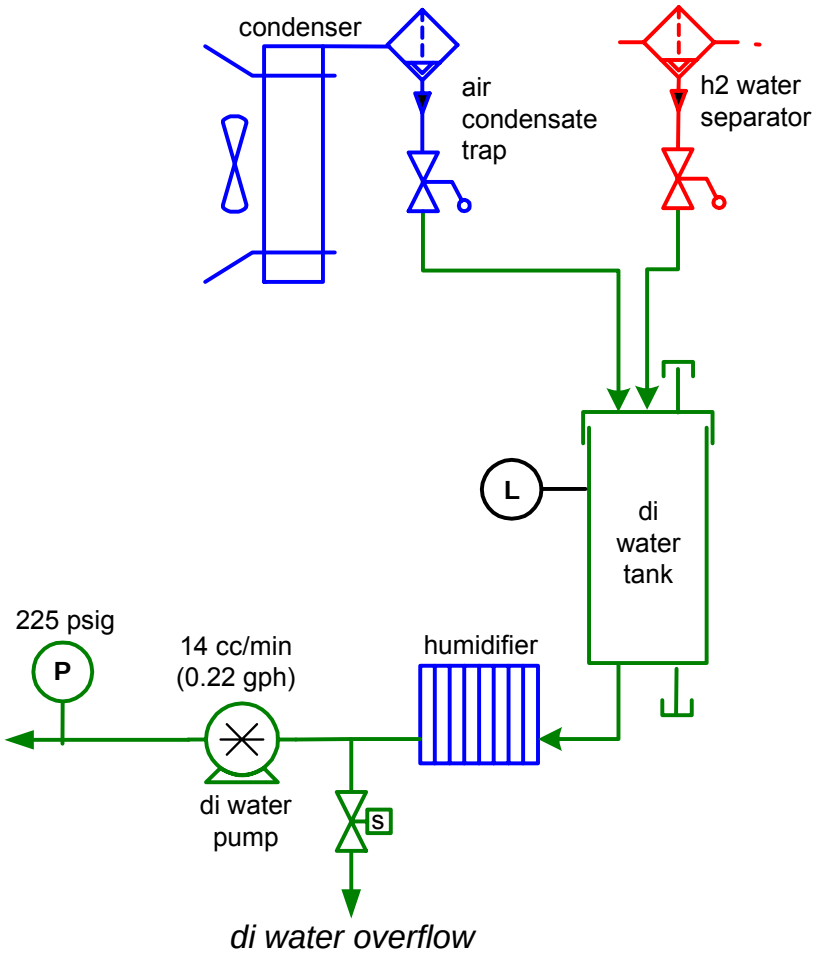

Propane Reformer Subsystem

The steam reforming of propane (C_3H_8) can be shown by the general equilibrium reaction:

$$C_3H_8 + \alpha H_2O \leftrightarrow \beta CO + \chi CO_2 + \delta H_2 \quad \text{(I)}$$

However, during this steam reforming process, there are several equilibrium reactions taking place, including:

$$CO + H_2O \leftrightarrow CO_2 + H_2 \quad \text{(II)}$$

$$CO + 3H_2 \leftrightarrow CH_4 + H_2O \quad \text{(III)}$$

$$CO + 2H_2 \leftrightarrow CH_3OH \quad \text{(IV)}$$

The ultimate goal for higher reforming efficiency is to have the following reaction take place in the reactor:

$$C_3H_8 + 6H_2O \leftrightarrow 3CO_2 + 10H_2$$

Each of the above equilibrium reactions will be affected by temperature, pressure and concentration of the starting reactants. Looking at the first reaction (I), if the operational pressure is increased in the reformer, the amount of hydrogen produced is decreased, so the pressure is affecting the direction of the equilibrium. However, with the same pressure increase, Reaction (III) will be pushed to the right, forming methane. Therefore, optimization is crucial for this technology. CFG's patented and patent-pending fuel delivery system has been designed for optimum pressure, temperature and ratio of propane to water ([C3H8]/[H2O]).

If this ratio changes, all the above mentioned equillibria will be affected. CFG believes that to have a dependable reformer, it must be run at fixed operating conditions, that is, fixed amounts of propane and water going into the system, and fixed products leaving the reactor. Not only is this a question of changing equillibria and reactor dynamics, but also of system control and automation. It is obvious that an automation system could be developed to handle variable inputs, but the size and expense of such a system would not be feasible.

Another important point for using the fixed ratio of propane to water is if the ratio changes, and consequently the amount of water changes, then it is possible that the reforming catalysts will be surrounded by a large number of water molecules. If this happens, then catalytic activity will be decreased significantly.

The mass balance of the reformer gives a general idea of the extent of the reforming reaction, and the yield of the reformer as well as the amount of water consumed in the reforming process. The balance provided has been done at one set of operating parameters. For each set of parameters, the yield of reaction will change.

Total input: 0.377 moles (0.277 moles H_2O, 0.1 moles C_3H_8)
Total output: 0.370 moles (0.32 moles raffinate, 0.05 moles H_2O)

Figure 8 shows the active sections of the reformer along with the purifier and the components that directly support the process. The reformer includes a fuel delivery system, a desulphurization bed, a burner and finally the catalyst bed. The steady-state process temperature, pressure and flow conditions are listed below.

Figure 8 – Fuel Processing Subsystem

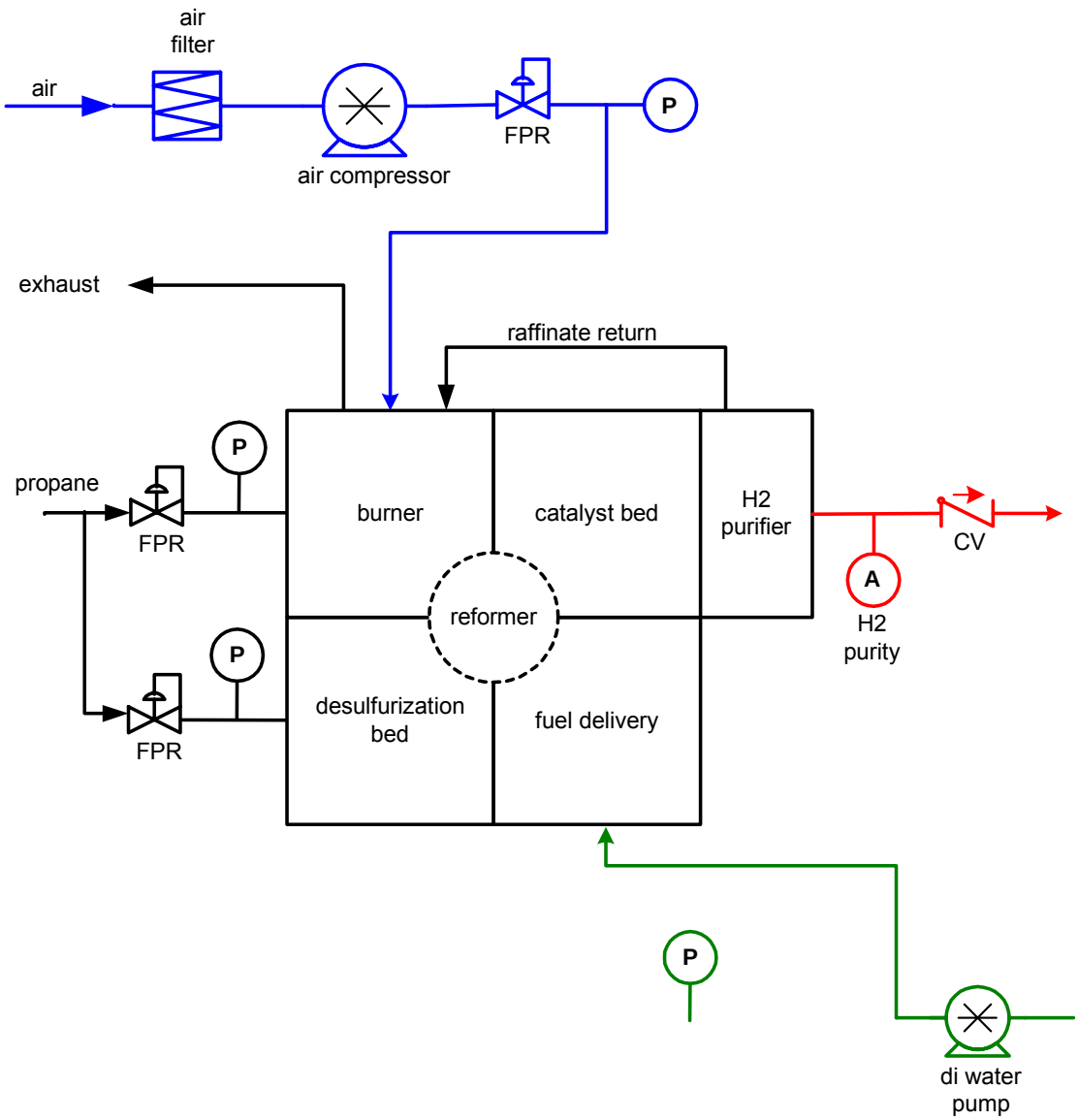

CFG has developed a novel fuel delivery system that allows for the delivery of low-pressure propane to the reformer. The propane can be delivered into the reformer without the need of increasing the pressure of the propane, which can be expensive and energetically costly (compressor) or dangerous (heating of the propane tank to increase pressure). Another issue with compressing propane is that upon compression propane will liquefy, which causes large temperature fluctuations in the reformer, which in turn changes the equilibrium in the reformer.

CFG is in the process of developing a full mathematical model of the delivery system. This process will help to scale-up the reformer and correspondingly change the ratio of fuel to H_2O,

and ease in the switching to or utilizing another fuel. While this process takes time up front, CFG believes that this will prove to be less costly and less time consuming in the end.

Sulfur compounds, such as H_2S, mercaptans and thiophene, are used as odorants in propane and natural gas for leak detection. While these chemicals play an important role in the safety of handling propane, they pose a risk to reforming and fuel cell systems. Sulfur compounds can "poison" the reforming catalyst, that is, the sulfur compounds will attach themselves to the active sites on the catalyst (where reforming takes place), thus making those active sites no longer functional. Overtime this poisoning will reduce the efficiency of the reforming. However, extended studies have found that it is not critical to remove 100% of the sulfur compounds. On the following chart, it is shown that removing 90% of the sulfur, catalyst bed lifetime is increased significantly, but there is no significant difference between removing 90% of the sulfur and removing 100% of the sulfur. This percentage is dependant on the specific sulfur compounds which have been removed because the effects of the different compounds on the reforming catalysts are different. It should be noted that these tests were done on very small catalyst beds, not large beds used in the reformers. The standard catalyst bed has a lifetime of 350+ hours.

Figure 9 - Sulfur Levels vs. Catalyst Bed Lifetime

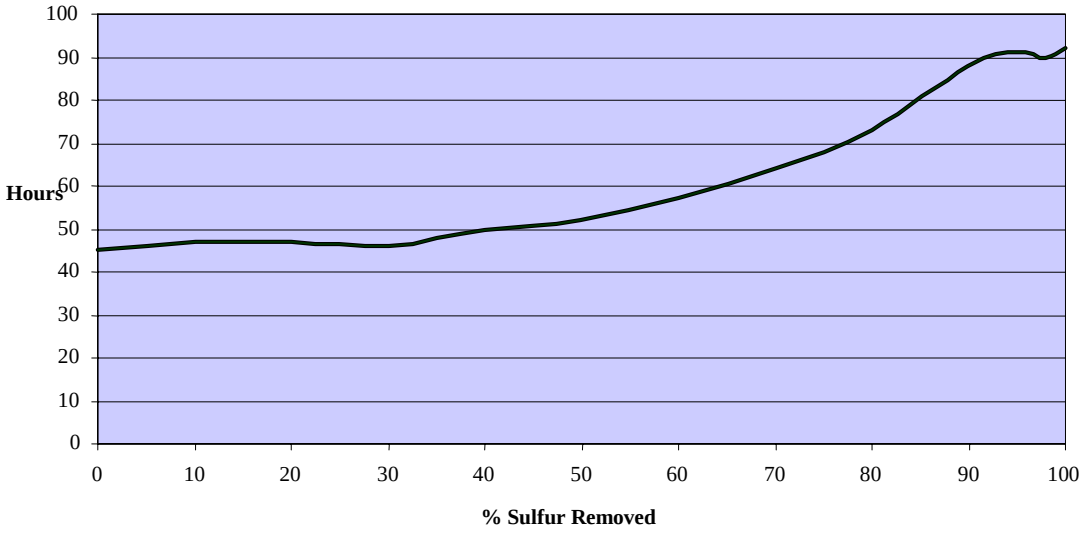

Based on this data, CFG developed a desulphurization unit which, using a commercial sulfur sorbent, removes 90-92% of the sulfur from the propane over a given period of time, depending on the sizing of the sorbent bed.

Because steam reforming is an endothermic process, it requires heat for the reaction to occur. Based on the size of the reformer and fuel being used, heat requirements can fluctuate greatly. For the steam reforming of propane, in order to get a yield of 40 slm hydrogen from the purifier, the CFG system requires a forced air burner which delivers 15166 BTU/hr. This burner provides the necessary high temperature at which the reforming takes places (700 C) and also provides preheating for the production of steam and the heat necessary to operate the

purification unit. However, because of the high temperature, there is significant heat available in the burner exhaust, which leaves this system open to many cogeneration opportunities. One of these opportunities which may be of particular interest for this project is to provide heat to a cold diesel engine block. Another possibility for cogeneration would be to utilize this heat for cabin space heating in the truck/sleeper or recreational vehicle.

With the fuel delivery unit being designed for one set point, it was critical that an optimized fuel to water ratio be determined to yield the desired amount of hydrogen. With so many operating variables affecting the reformer, it was important to determine the optimal set points.

Temperature optimization was accomplished by holding the propane and water inputs constant as well as holding the reformer pressure constant. Due to the many temperature gradients that exist in the reformer, it was necessary to select one point of reference in order to optimize temperature. Reformer response is also a critical part of the temperature optimization, because as with any endothermic reaction, there will be an initial temperature drop, then a leveling off, and finally a stabilization at steady-state conditions. All these points had to be considered in order to optimize heat transfer to the reformer, as well as looking at the maximization of the yield of the reforming reaction.

Figure 10 – Design Selection Data

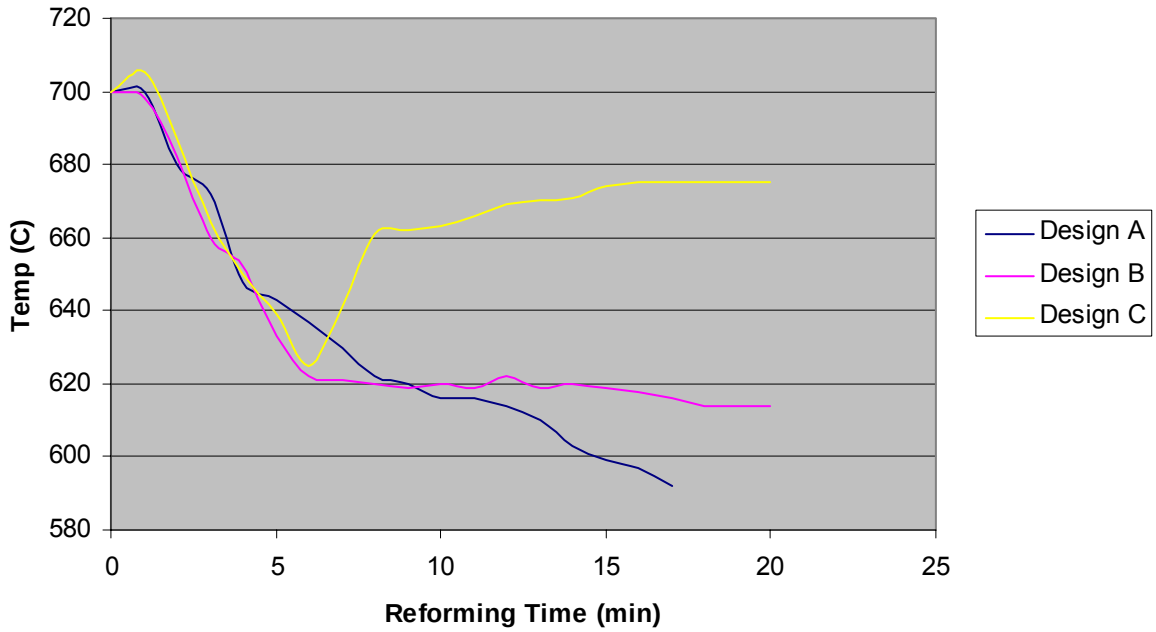

Another consideration in temperature optimization is the time to start-up conditions. Minimization of start-up time is critical, so this was also considered in design selection. Ultimately Design C, with a 15166 BTU/hr burner and good heat exchange capabilities was chosen as the best model.

Pressure optimization is critical for several reasons. First, the fuel delivery system must be set up to deliver against the chosen pressure in the reformer, and it must be able to deliver the

proper amount of fuel to maintain the pressure inside the reformer. Secondly, the extent to which side reactions occur is apparently influenced more by pressure than by any other factor. Lastly, the pressure of the reformer must be maintained in order to deliver fuel at an appropriate pressure for the operation of the hydrogen purification unit.

Optimization of the fuel mixture (propane and water) is a difficult task, with each so dependant on the other for maximum reaction yield, as well as having each optimization be dependant on the temperature and pressure of the reforming system. However, because generation of hydrogen is the key part of the reforming reaction, it was used as the measurement by which the optimization was measured. Each input was varied versus an experimentally optimized fixed point of the other. For example, it was found experimentally that 10 ml of water input was optimal, so this point was used to find the optimal amount of propane, and vice versa. This process consisted of many iterations in order to determine the final optimized points.

Figure 11 – Optimization of H2O:Propane

This information is considered proprietary and has been omitted.

Turndown of the reformer system is a very difficult task. This has to do with several factors, the main one being the design of the patented fuel delivery system. Because the delivery unit not only mixes the fuel, but also delivers the propane from a lower pressure to a higher pressure, the calculations of the fluid dynamic parameters in the delivery unit are very complex. For the steady state delivery unit, specific orifices have been calculated for the propane and steam which are being delivered at a specific temperature and pressure. This yields very consistent results, but only allows for “one speed” reforming, on or off. If a turndown system was desired, a mathematical and fluid dynamic model would need to be developed for the entire range of the fuel/steam mixture. This model would then need to be able to adjust variable orifices and/or mixer angles in order to deliver the propane into the reformer. This would be a costly and

cumbersome system. CFG believes that such a system would elevate the cost and size of the system to a point where it is no longer feasible for the desired markets.

Purifier

Membrane purifiers work using pressure-driven diffusion across a palladium membrane. Only hydrogen will diffuse through the membrane. When the crystal lattice of the palladium or palladium alloy is heated above 300 ºC, monatomic hydrogen will pass through the palladium. The mechanism of this diffusion is a six-step process: (1) adsorption, (2) dissociation, (3) ionization, (4) diffusion, (5) recombination and (6) desorption. This process is laid out schematically below.

Figure 12 – Palladium Purifier Process

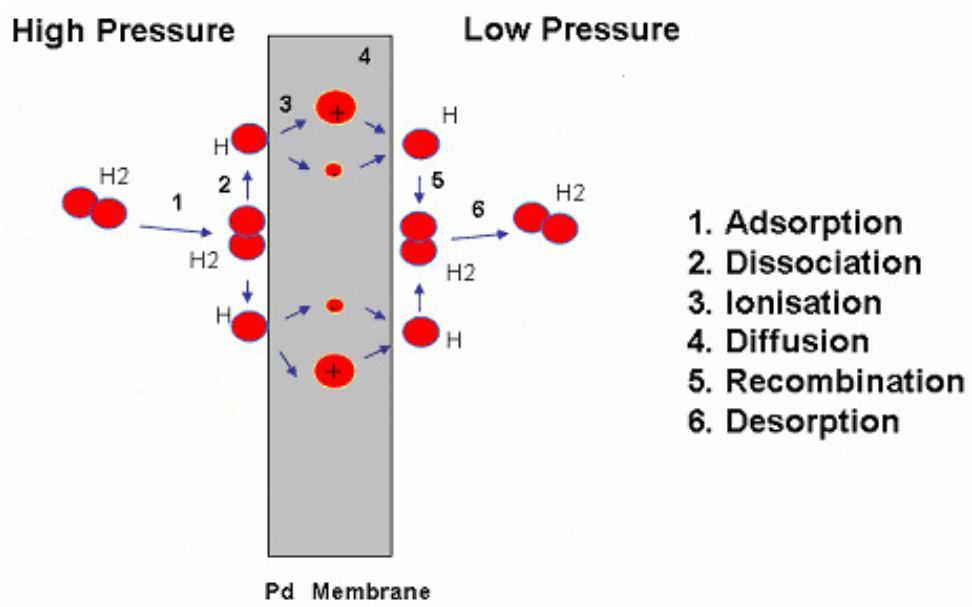

Reference:

1) Dr. J.B. Hunter, "Ultrapure Hydrogen By Diffusion Through Palladium Alloys", Presented at the Symposium on the Production of Hydrogen Petroleum Division, The American Chemical Society Meeting, New York, Fall 1963.

In summary, CFG's patented and patent pending membrane purifier is a leak-free system that allows only ultra-pure hydrogen gas to pass through. The special design of this purifier gives that system the appropriate mechanical stability for a more dependable purification system. The flux of the hydrogen in CFG's purifier is a function of the composition and thickness of the membrane, operating temperature and pressure, and the mole fraction of the hydrogen on the surface of the membrane. In general, the efficiency of the purifier membrane is based on the flux rate of that membrane, which is the amount of hydrogen flow through a given surface area of that membrane. An example of the flux data for the CFG membrane is shown below.

Figure 13 - Purifer Pressure vs. H2 Flux

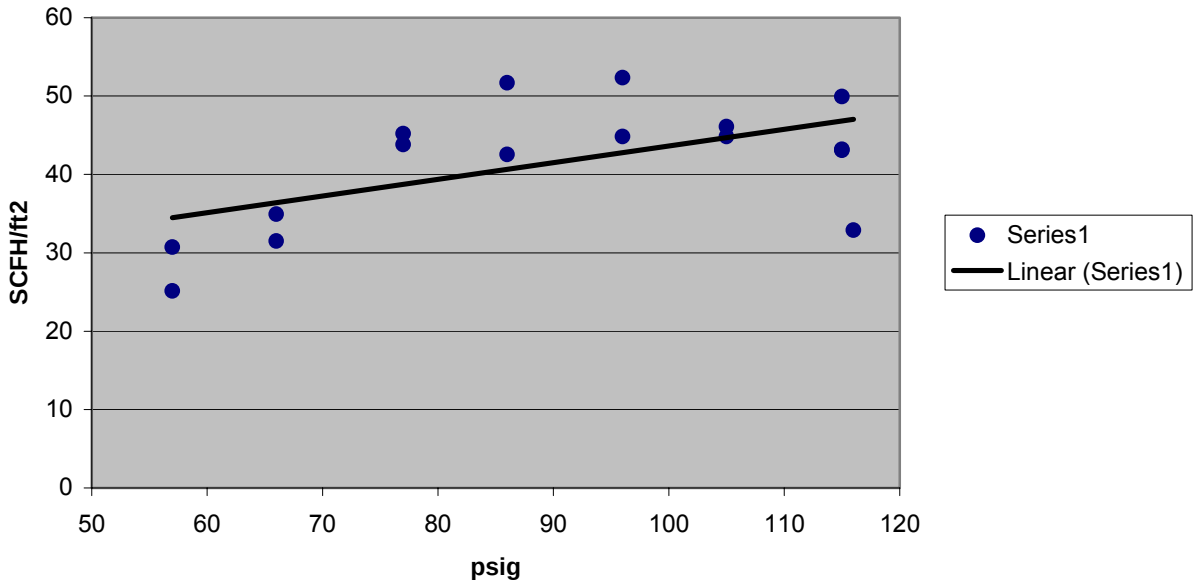

In general, purification membranes are composed on palladium-silver membranes or tubes. CFG's purifier membranes are composed of a proprietary palladium alloy. The body of the purifier is fabricated from stainless steel.

Temperature and pressure are very important factors on the operation of a membrane purifier. Both play a major role in the flux rate of the membrane. Pressure plays the biggest role, having a huge effect on the flux through the membrane, as shown below.

Figure 14 – Purifier P vs. Flow (@ constant T)

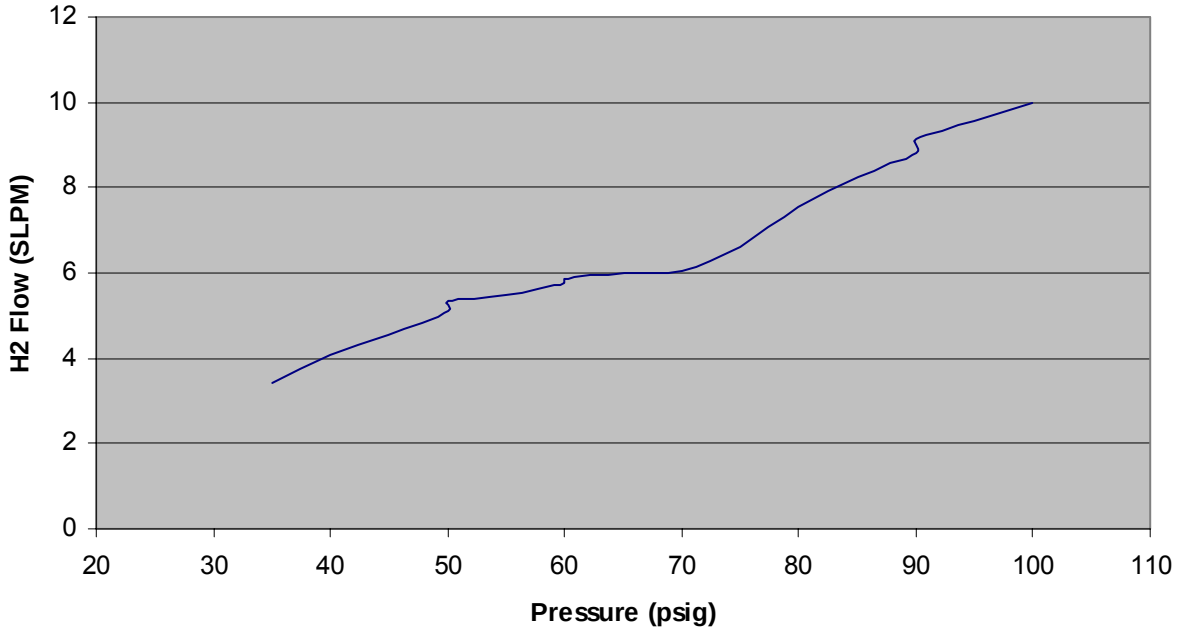

Temperature also plays a role, as shown below.

Figure 15 – Purifier Temp. vs. Flow (@ constant P)

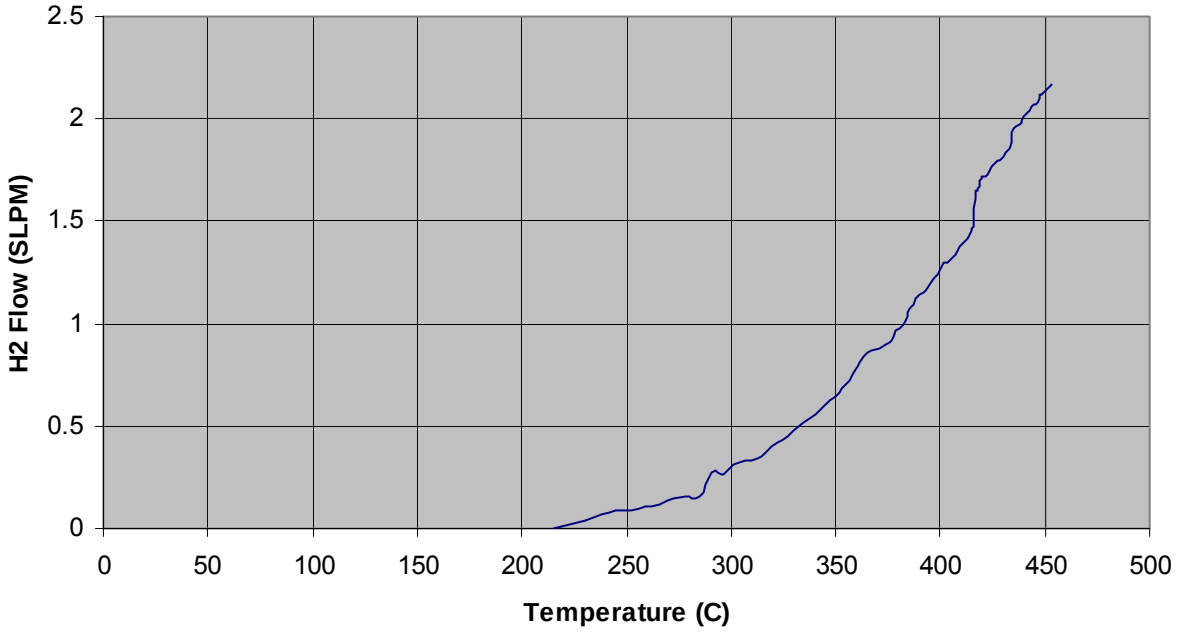

Based on the data above, as well as extensive experimental results, the operating parameters of the purifier unit are 300-400 ºC, 125 psig input pressure, 0-5 psig output pressure.

The impurities (exhaust) from the purifier include all the gasses which do not pass through the membrane, mainly CO, CO2, CH4 as well as some H2. These gases may be fed to the reformer burner where they will supplement the propane that is burned to heat the reformer and purifier.

Energy Storage

The reformer reaction is a thermal process requiring a significant thermal capacitance to be maintained at elevated temperature. This is inherently a slow responding, time dependent process that is best allowed to run in a continuous, steady state condition. The reformer takes approximately 20 minutes to heat up and come online. The reformer can turn off and maintain a hot standby condition, but it is not designed with the ability to vary output capacity and follow the hydrogen demand profile shown in Figure 3. In contrast the fuel cell reaction is an electrochemical process that can consume hydrogen and respond to an electrical load almost immediately. The fuel cell is able to follow the electrical load profile shown in Figures 1 and 3. The overall system must incorporate some form of energy storage to allow the reformer to run at an average, steady state condition and provide a varying electrical output to meet the load profile.

Two energy storage methods have been considered for providing the energy storage requirement. Hydrogen can be used as the energy storage means. Pressurized gas storage of the reformer hydrogen product can allow a large enough energy storage capacity for the

reformer and provide the fuel cell a continuous source of reactant hydrogen to meet the varying electrical demand. Electrical battery storage capacity for an average fuel cell output running in unison with the steady state reformer output is another possibility. The battery storage capacity has to be large enough to provide for peak power loads above the average fuel cell output and absorb excess power below the average output. A combination of the two storage methods could also be used but has not been considered. Both of these energy storage schemes have been modeled and analyzed to consider the weight, volume and performance trade-offs.

Hydrogen Storage

The match up of hydrogen consumption of the fuel cell and hydrogen production of the reformer is shown in Figure 16. The figure charts accumulated hydrogen volume over the 5 hour load profile. The solid black line is the accumulated volume of hydrogen consumed to meet the electrical load. The black consumption line starts at zero volume at time zero and ends at an accumulated volume of 8.2 standard cubic meters (sm^3) after the 5 hour period of operation. A total hydrogen volume of 8.2 sm^3 is required to meet a single 5 hour load profile.

Figure 16 – H2 Consumption versus Production

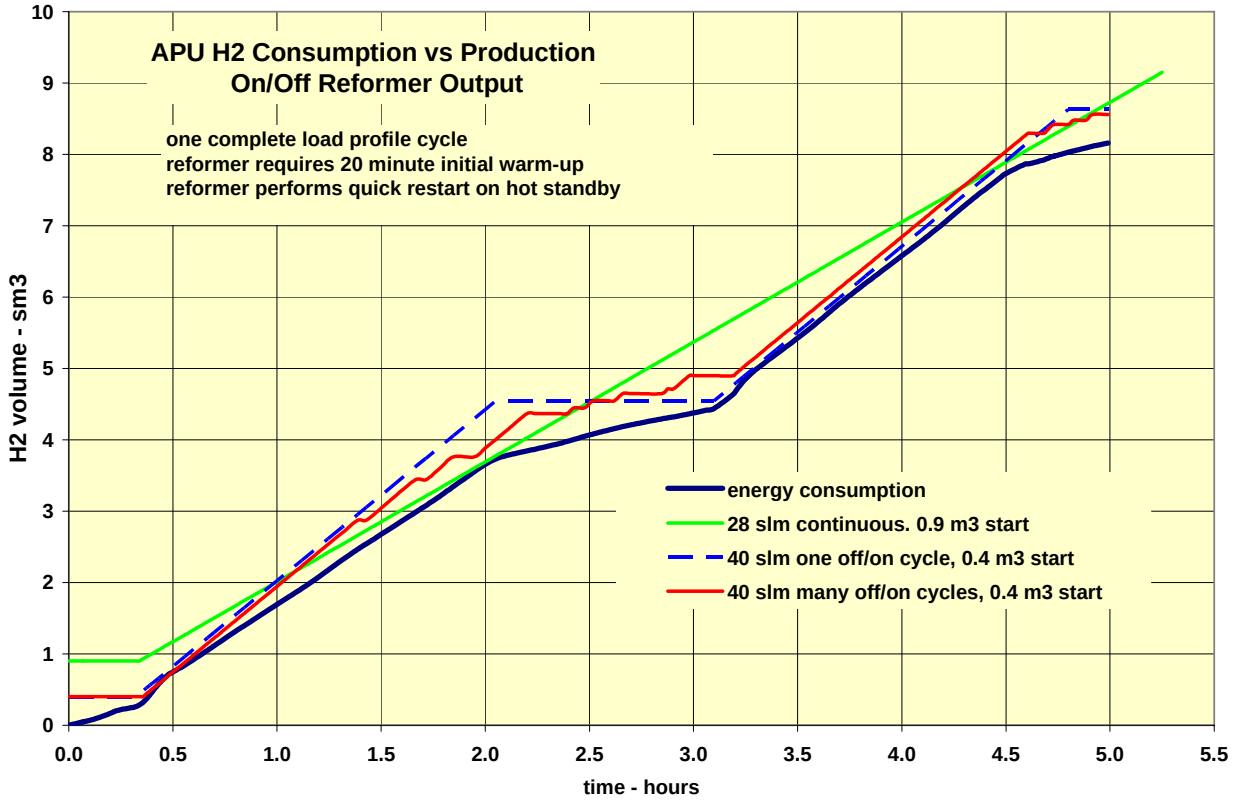

The green, blue and red production lines are shown for different reformer on/off control and storage scenarios. An initial hydrogen storage volume is needed to provide hydrogen during the 20 minute heat-up period. At any point in time the production/storage volume line must be on or above the consumption volume line for the fuel cell to have sufficient hydrogen to continue operation. The vertical difference between production line and the consumption line at any point in time represents excess hydrogen production volume that must be stored in order to meet upcoming consumption demand.

The green line scenario represents a system design with a reformer capacity of 28 slm running continuously after the 20 minute warm-up. This design requires a startup hydrogen storage volume of 0.9 sm^3. The reformer must run beyond the 5 hour cycle in order to fill the storage volume for the next startup. It requires the largest storage volume of the three scenarios. At about 3 hours into the load cycle the green scenario requires 1.1 sm^3 of hydrogen storage to enable a completed load profile. This scenario allows the smallest reformer capacity but requires the largest storage volume.

The blue line scenario design is an effort to reduce the storage volume with a simple, single off/on control sequence during the low demand period of the cycle. The design requires a reformer capacity of 40 slm to maintain production to meet the hydrogen consumption profile. The design allows a 0.4 sm^3 volume for startup. This is the minimum storage volume necessary to satisfy the demand profile during the 20 minute reformer warm-up. Close to the 2 hour point the blue scenario requires a hydrogen storage volume of 0.8 sm^3 to enable a completed load profile. This is not much of an improvement over the green scenario.

Using only the minimum 0.4 sm^3 startup storage volume requires many off/on sequences be performed over the 5 hour load cycle. The red line scenario design controls the reformer off/on sequencing to maintain a storage volume of less then 0.5 sm^3. The scenario assumes the reformer can perform a quick restart from a hot standby condition. The reformer must perform the off/on sequence with quick restart 12 times to successfully complete this scenario.

A hydrogen compressor is required to compress the excess hydrogen produced into the storage volume. A storage pressure 200 psig was selected as a trade-off of storage tank volume, storage tank weight and compressor efficiency, size and weight. Analysis of the production and consumption rates of the red line scenario design resulted in the selection of a 6 slm compressor. The match up of hydrogen consumption versus production with compressed storage is shown in Figure 17. The error in the match-up is largely due to the coarseness of the time interval in the load profile model. The red line shows the hydrogen available for consumption. The blue line is the standard volume of hydrogen in storage.

Figure 17 – H2 Consumption versus Production with Compression

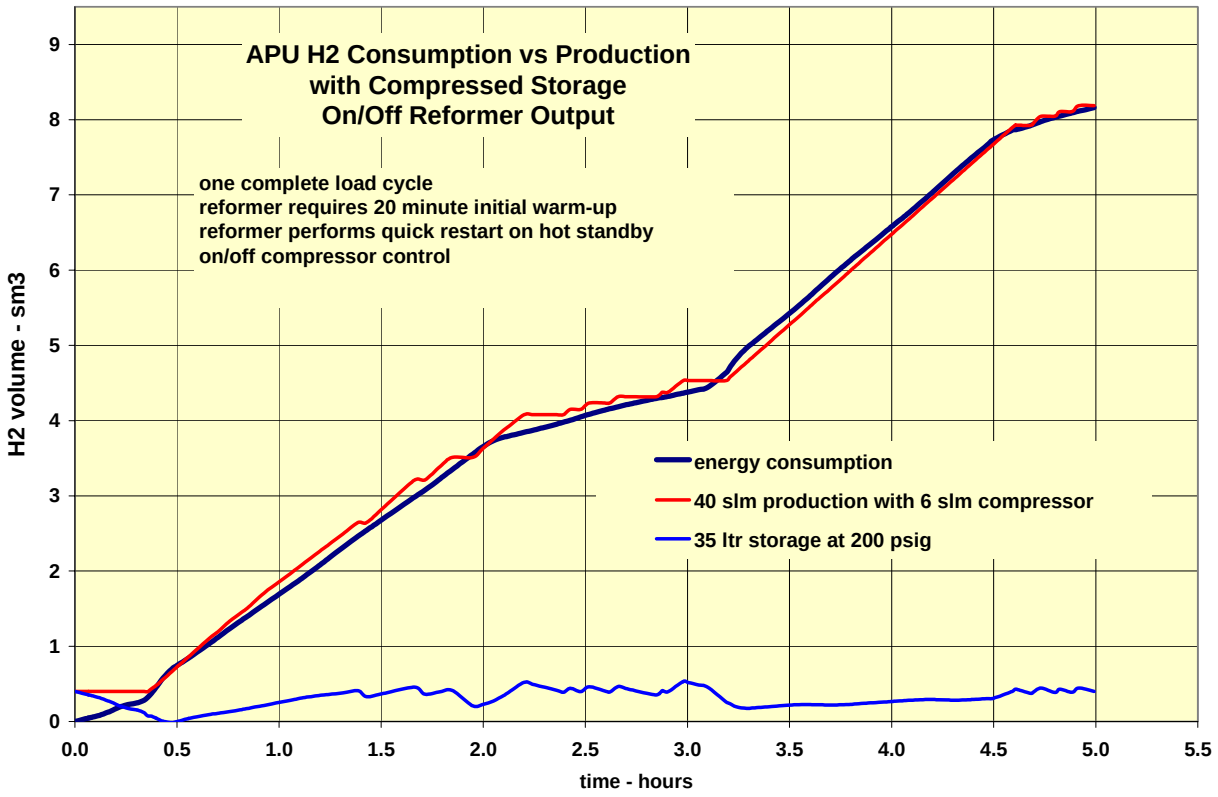

Figure 18 shows the hydrogen storage subsystem components. The compressor is controlled to operate when the pressure from the reformer exceeds 5 psig. Hydrogen from the reformer is compressed into the 35 liter storage tank. When the tank pressure reaches 200 psig the compressor stops. If the inlet pressure exceeds 5 psig when the tank is at 200 psig the reformer goes into the hot standby condition. Forward pressure regulator FPR reduces the storage pressure to 5 psig for supply to the fuel cell stack. A solenoid supply valve provides a means of isolating the hydrogen storage supply to the stack.

Figure 18 – Hydrogen Storage Subsystem

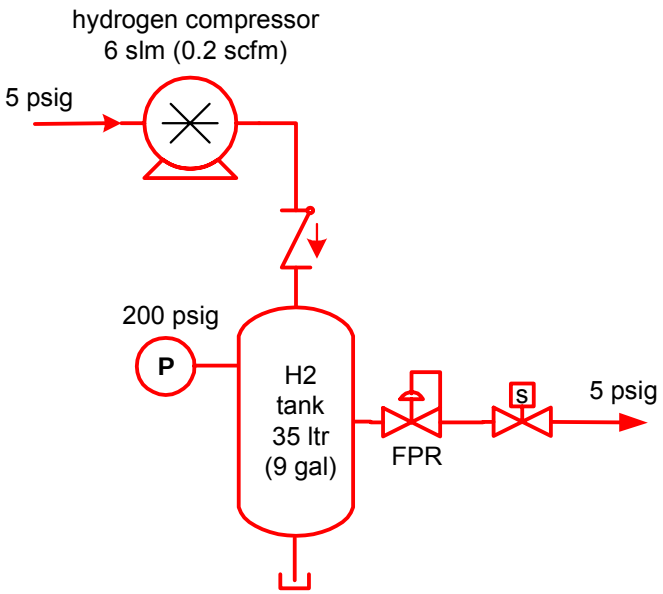

Battery Storage

The alternative to storing hydrogen to match the constant reformer output with the varying electrical demand is to store electrical power in deep cycle, rechargeable batteries. This is a hybrid design where both the reformer and the fuel cell run continuously at an average output to charge a battery bank. The load is powered from storage batteries which can provide power at loads greater than the fuel cell output and recharge at loads less then the fuel cell output. The reformer and fuel cell capacity can be sized at minimum capacity, but the batteries must be sized to provide enough electrical capacity to meet the load profile over the entire 5 hour cycle. These batteries are separate and independent of the standard truck batteries.

The reformer and fuel cell will run for 5 hours minus the 20 minute startup. Without the hydrogen compressor in the system, the total electrical energy output for the cycle is 12.9 kWh. The fuel cell is sized to produce a constant 2.8 kWh over the 4 hour, 40 minute period. The fuel cell will operate at a fixed current so the active cell area can be selected to maximize efficiency. Using an operating cell voltage of 0.78 Vdc the reformer is sized to deliver a constant 27 slm of hydrogen. The number of cells in the stack is selected to match the battery voltage to allow direct battery charging.

Figure 19 shows the required current flow in and out of the battery bank over the 5 hour load cycle. The load profile is shown as the black dashed line referenced to the y-axis on the right. Current flows for the four different battery bank voltages are referenced to the left y-axis. The maximum charge and discharge rates are listed in Table 3.

Figure 19 – Battery Current Flow

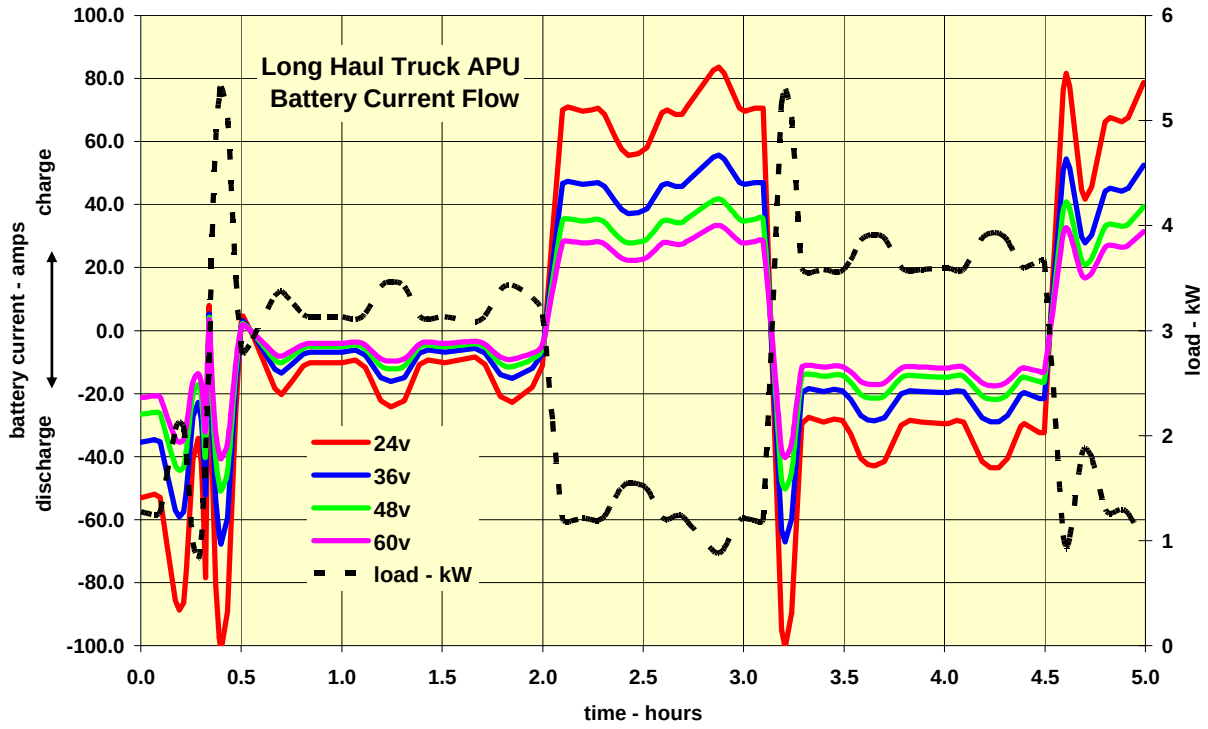

Table 3 – Maximum Battery Conditions

Voltage Vdc	Max Discharge Amp	Max Charge Amp	Max Capacity Amp-hr
24	102	84	73
36	68	56	49
48	51	42	37
60	41	33	30

The amp-hr battery bank capacity requirement through the 5 hour load profile is shown in Figure 20. The maximum capacity requirement, listed in Table 3, occurs just after 3 hours of operation.

Figure 20 – Battery Storage Capacity

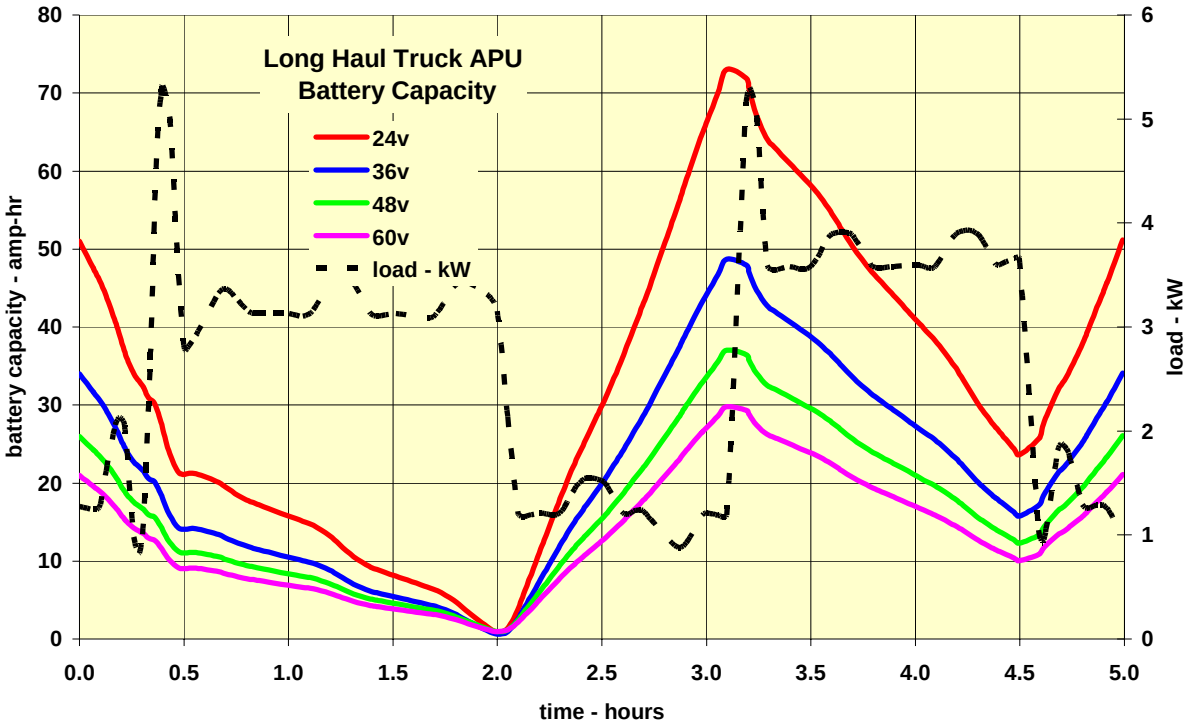

Two deep cycle battery chemistries can be considered for this application. Lead acid and nickel metal hydride (NiMH) batteries are currently available and can be grouped together to provide the required Amp ratings and Amp-hr capacities. Connecting batteries in series increases the voltage, reducing the current required for a given power output. Connecting batteries in parallel provides more Amp-hour capacity, allowing greater discharge and charging rates. The higher the discharge/charge rate the lower the battery efficiency.

The battery capacity requirements for this application are moderate in comparison to the charge/discharge requirements. The maximum charge rates are almost as large as the discharge rates. The battery bank configuration for this design depends on the allowable charge rates. Acceptable charging rates for lead acid batteries are about one-eighth of the Amp-hr rating and about one-sixth for NiMH batteries.

The battery bank capacity, weight and volume are listed in Table 4 for both types of batteries based on their acceptable charging rate. The specific energy and energy density values are typical of those found in the literature. The results show a definite weight and volume advantage for the NiMH battery configuration. However, the weight of the battery bank alone is in excess of the weight goal for the entire fuel cell system.

Table 4 – Battery Bank Specifications

Property/Specification	Units	Lead Acid	NiMH
specific energy	Wh/lb	18	25
energy density	kWh/ft^3	2.1	6.2
required capacity	kWh	14.1	10.6
battery bank weight	lbs	783	424
battery bank volume	ft^3	6.6	1.7

COMPONENT SELECTION

The overall system piping and instrumentation diagram (P&ID) is shown as a foldout at the end of the report. The system uses hydrogen storage. The P&ID includes all the subsystem diagrams shown in Figures 4 through 8 and Figure 18.

Pictures of the reformer and the purifier are shown in Figures 21 and 22.

Figure 21 – Propane Reformer

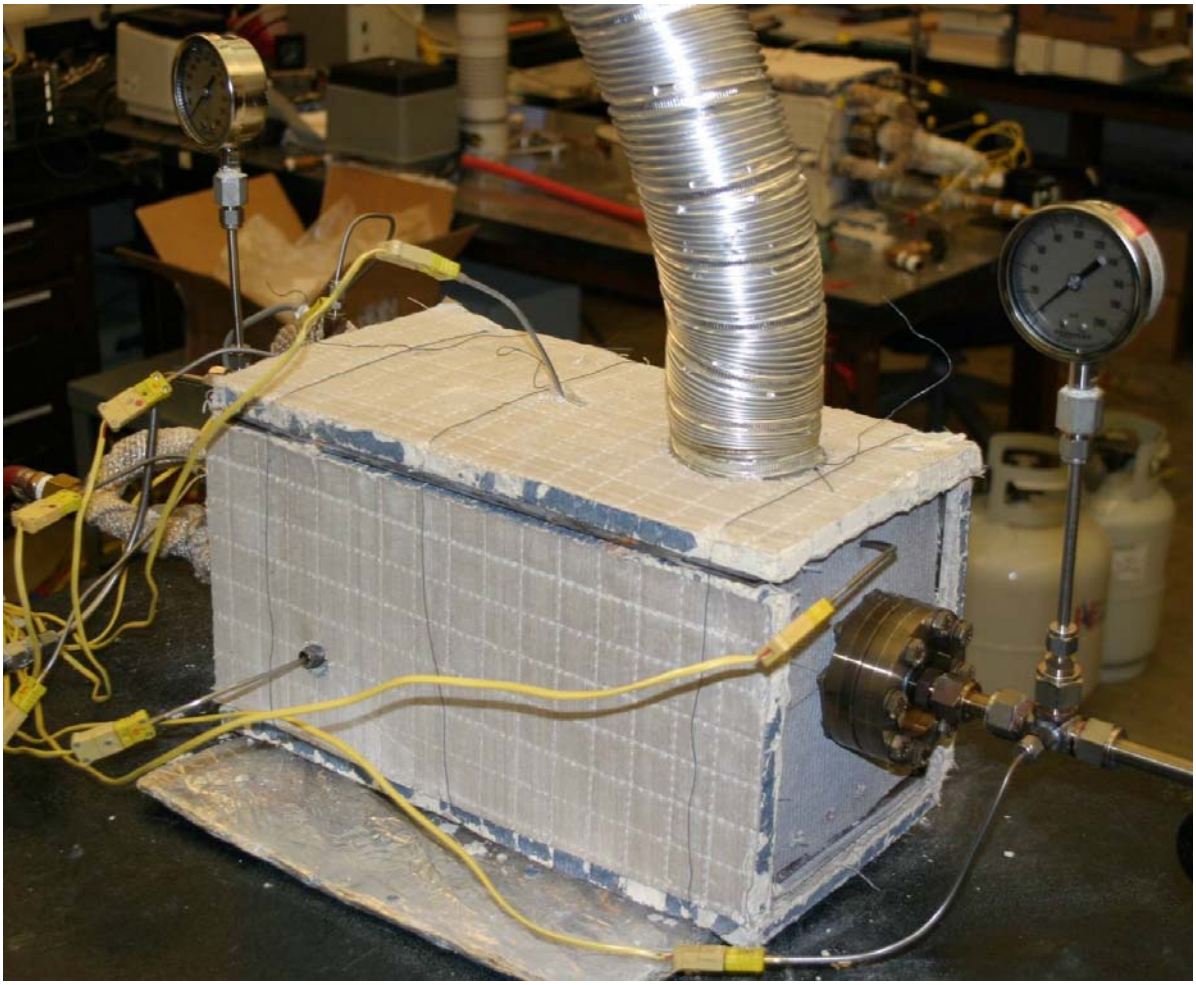

Figure 22 – Hydrogen Purifier

A picture of the fuel cell stack configuration selected for this project is shown in Figure 23. This the NG2000 design with an active area of 300 cm^2. The stack shown has 32 cells. The stack for the APU will contain 50 cells.

Figure 23 – NG2000 Fuel Cell Stack

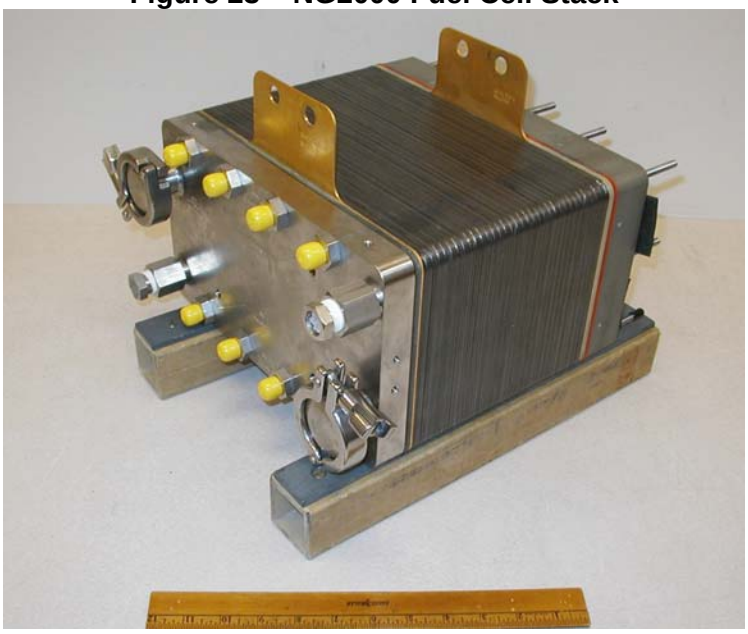

The two air compressors, the hydrogen pump, the hydrogen circulator and the de-mineralized water pump are all linear motion devices. They are pulsed at 60 Hertz by the AC output of the power inverter. The coolant circulation pump and the fan for the heat exchanger and condenser are driven with rotary motors. They also run off the AC output. The electrical consumption for these motors is included in Table 1.

The air compressors, for the fuel cell reactant and the reformer, are from Alita Industries. They are both the same configuration but different capacities. The Alita 200 has been selected for the fuel cell and the Alita 150 for the reformer. The Alita 200 will operate continuously, supplying air to the fuel cell throughout the 5 hour load cycle. The Alita 150 supplies air to the reformer, operating when the reformer is warming up or producing hydrogen. An Alita 200 has been purchased and tested for Task 2. The Alita 150 is expected to perform the same. The Alita 200 is shown in Figure 24.

Figure 24 – Alita 200

A Gast Model DDL30BS has been selected for the hydrogen circulator. This linear pump configuration has both an outlet port and a suction port allowing it to be used as an inline circulator. A Gast DDL30BS has been purchased and tested for Task 2. The DDL30BS is shown in Figure 25.

Figure 25 – Gast DDL30BS

Pumpworks makes linear actuated pumps that will supply gas pressures higher than typically available with linear pumps. The Pumpworks PW2170 will supply gas pressures up to the 200 psig required for the hydrogen storage. The pump tested does not have sufficient capacity to meet the flow requirement. The company is in the process of designing a pump with enough capacity. A PW2170 has been purchased and tested to verify pressure performance for the lower capacity unit. The PW2170 is shown in Figure 26.

Figure 26 – Pumpworks PW2170

The de-mineralized water supply for the reformer requires a relatively high pressure input at a very low, controlled flow rate. A metering pump from Pulsatron has been chosen for this application. The model LPB2MA can supply water up to 250 psig and 25 cc/min. It is controlled with a 4 to 20 mA signal. A Pulsatron is shown in Figure 27. A unit was purchased and tested to verify performance.

Figure 27 – Pulsatron LPB2MA

A March model 809-PL-HS centrifugal water pump has been selected to circulate the coolant. This pump is capable of supplying the 25 lpm coolant flow required to maintain the allowable temperature rise across the fuel cell stack. The March 809-PL-HS is shown in Figure 28. TESI has had considerable and favorable experience with March pumps. The 809 was not tested for Task 2.

Figure 28 – March Pump 809-PL-HS

The remaining major components shown in the P&ID have been sized for the application but selections of specific configurations have not been included in Task 2. These components include the heat exchanger, condenser and trap, water separator, de-mineralized water cartridge and several tanks. All the major parts are listed in Table 5 with an estimated weight and volume.

The process controller and power inverter for the design have been selected but were not tested. Both of these are off-the-shelf units with standard user specifications and proven reliability. The process controller is a standardized, PC104 programmable logic controller (PLC). This is a compact PLC platform, which is available from a variety of suppliers who manufacture to the PC104 standard. The power inverter is a Tripp Model APS3636VR. Specifications for the inverter are listed in Table 6. The weight and volumes of the process controller and power inverter are included in Table 5.

Table 5 – Component Weights and Volumes

V	volume ft3	Weight lb	V	volume ft3	Weight lb
compressor, reformer air	0.46	22.3	trap, O_2 condensate	0.10	2.2
reformer	1.00	64.0	trap, H_2	0.10	2.2
purifier	0.47	45.0	pump, H_2 circulation	0.06	6.4
pump, di water	0.45	13.0	tank, di water	0.30	3.0
compressor, H_2	0.46	4.8	tank, coolant	0.30	3.0
tank, H_2 storage	1.00	6.5	pump, coolant	0.08	5.0
air compressor, stack	0.46	22.3	heat exchanger, coolant	0.46	12.6
fuel cell stack w/ humidifier	0.88	65.0	controls	0.07	0.6
condenser, O_2	0.50	2.5			

Table 6 – Inverter Specifications

Specification	Qty
nominal voltage input	36 Vdc
input voltage range	30-45 Vdc
nominal voltage output	120 Vac
output frequency	60 Hz
nominal power output	3600 Watts
overpower output	5400 Watts

The weight and volume totals for the major components, allow an approximation of system weight and a volume packaging factor when compared to the design goals. Based on a system utilizing the pressurized hydrogen storage option, the estimated total major component weight is 341 pounds, 41 pounds over the goal of 300 pounds. Furthermore, it is expected that a hydrogen compressor with a sufficient capacity and pressure will be heavier and have a larger volume than the PumpWorks unit considered in the tabulations. The additional plumbing components, tubing and structural frame weights will also increase the total weight. The total component volume is 7.6 cubic feet, about 63% of the volume goal of 12 cubic feet. This is a relatively high packaging factor that may require a final system envelope larger volume then originally intended. A packaging factor of 50% is probably more realistic for this product, leading to a system volume of about 15 cubic feet.

TEST DATA

A 2 cell stack has been operated in a fuel cell test station to validate stack performance and demonstrate load following capability. The stack was built with an active area of 300 cm^2 and standard TESI components. The stack was operated at a temperature of 60° C and reactant inlet pressures of 5 psig. The reactant rates used were based on the same stoichiometric ratios designated for the 50 cell stack used in the APU. The load profile imposed on the test stack is proportional to the expected APU load profile.

Figure 26 shows the fuel cell stack response to the load. The data shown has been normalized from the 2 cell data to a full 50-cell stack. The load from the test station and the immediate response from the fuel cell overlap and are shown as the solid black line. The load profile used in the computational model is shown as the dashed red line. The black and red profiles differ because fuel cell station provides a stepped load profile and the model uses a point-to-point profile.

The corresponding voltage profile for the fuel cell stack is also shown in Figure 29. Over the 5 hour cycle the stack maintains an output voltage within the 30 to 45 Vdc range required by the power inverter.

Figure 29 – Fuel Cell Load Profile Response

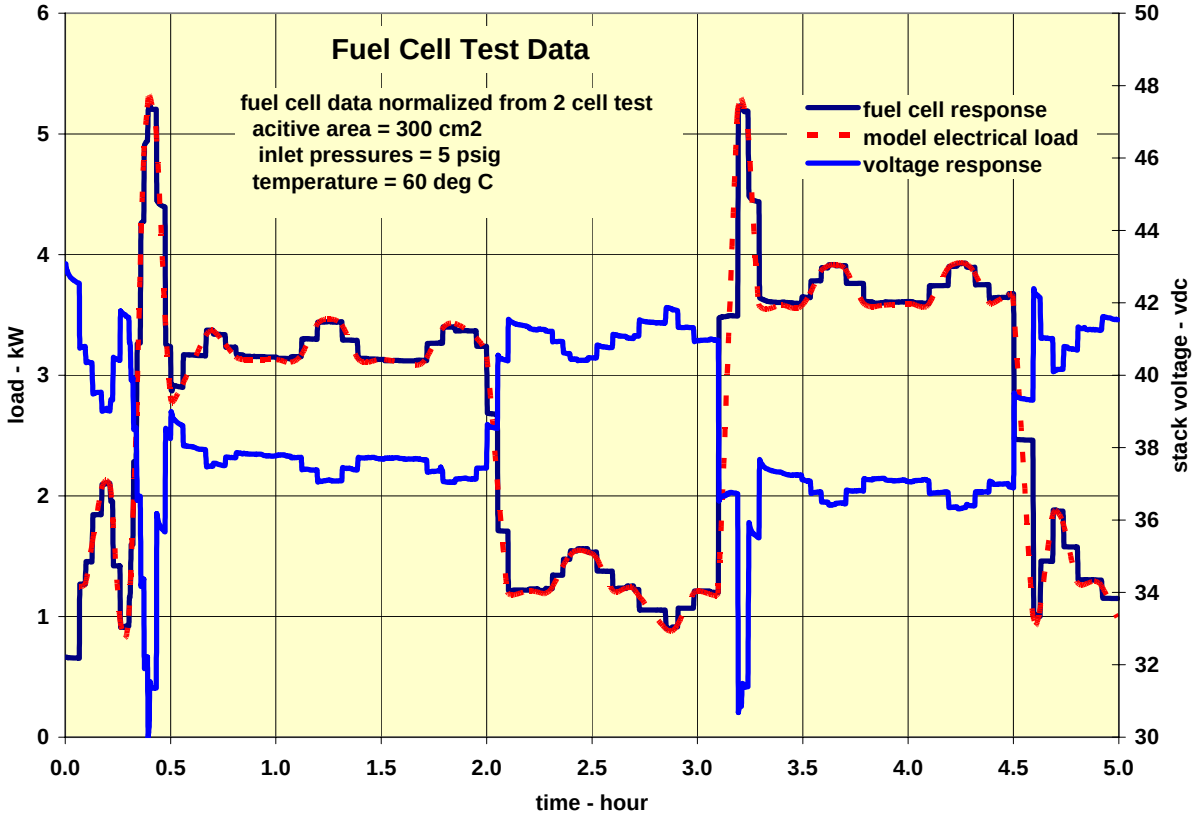

The reformer was tested to simulate operation of each of the two off/on production scenarios described in Figure 16. Figure 30 shows the results of testing to the "blue line" scenario, corresponding to one on-off-on cycle of the reformer. The reformer meets the hydrogen demand, responding quickly from a warm standby condition just after the third hour of the load cycle.

Figure 30 – Hydrogen Flow – "Blue Line Scenario"

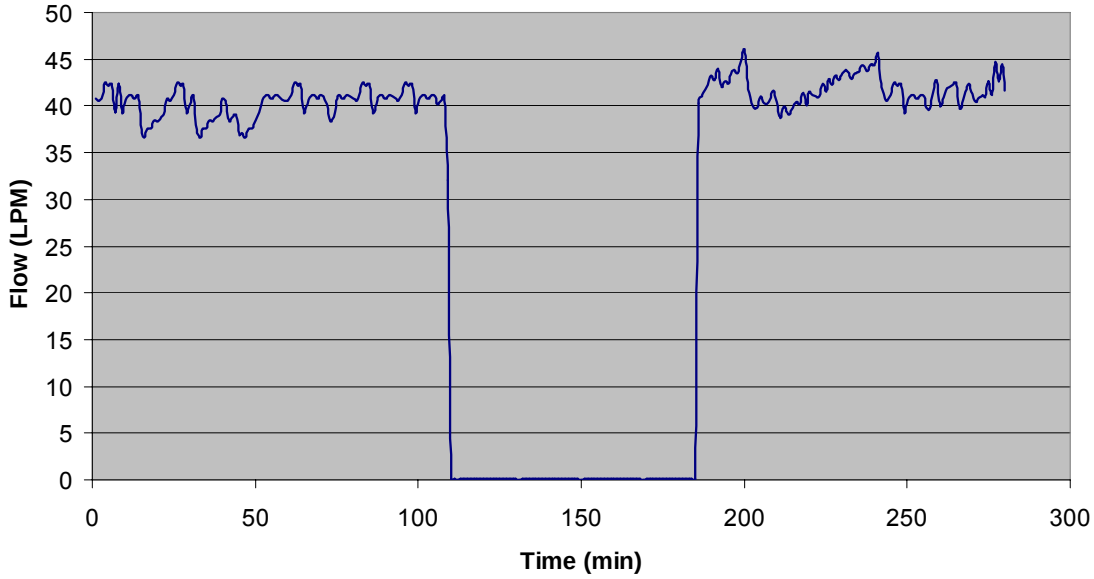

Figure 31 shows the results of testing to the “red line” scenario. This requires frequent off and on sequencing of the reformer. The sharp, downward spikes in the flow are caused by an occasional purge of the water trap that is in-line with the reformer output. The sequences toward the right of the graph do not reach the target of ~40 lpm because the “on” cycle for that period was short and the reformer could not reach its steady-state. In general, reformers work much more effectively under conditions such as in the “blue line” scenario, and are less effective and less stable in the “red line” conditions

Figure 31 – Hydrogen Flow – “Red Line Scenario”

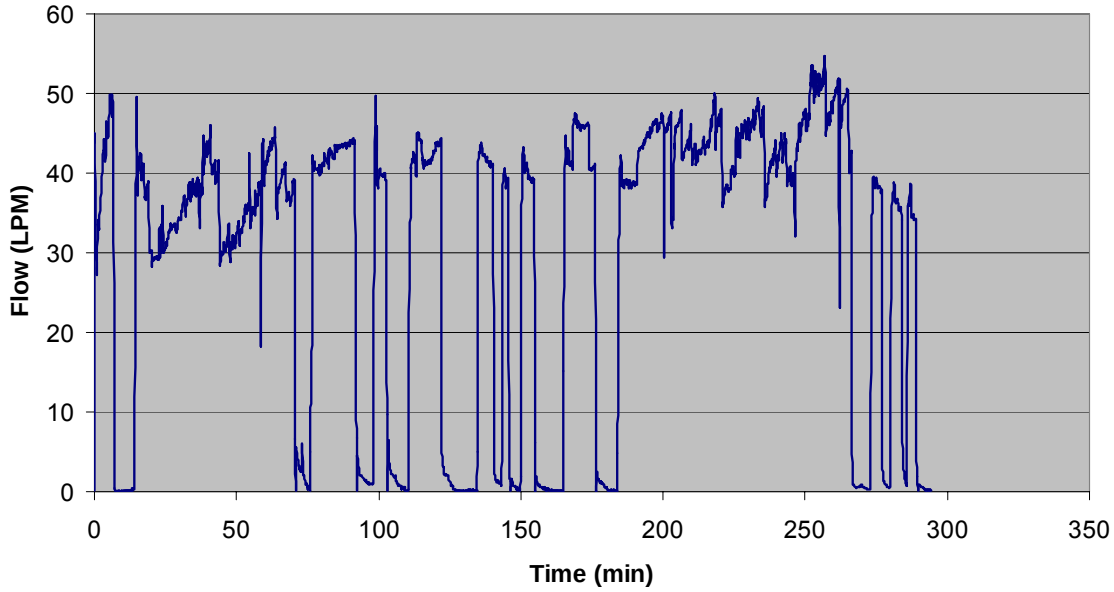

The reformer exhaust was tested to determine the level of air emissions. The results are shown in Table 7.

Table 7 – Reformer Exhaust Air Emissions

Gas	Quantity
HC	18 ppm
CO	0.12 %
CO_2	1.9 %
O_2	17.0 %
NO_x	50 ppm

The Alita 200 linear air compressor was tested with ambient air at room temperature and atmospheric pressure. Performance test data for the Alita linear air compressor is shown in Figure 32. The Alita operated quietly, at an acceptable low noise level. Flow performance was somewhat less then expected with less pressure developed at specific flows then required. Power consumption increases significantly, beyond expected, at higher flows.

Figure 32 – Air Compressor Test Data

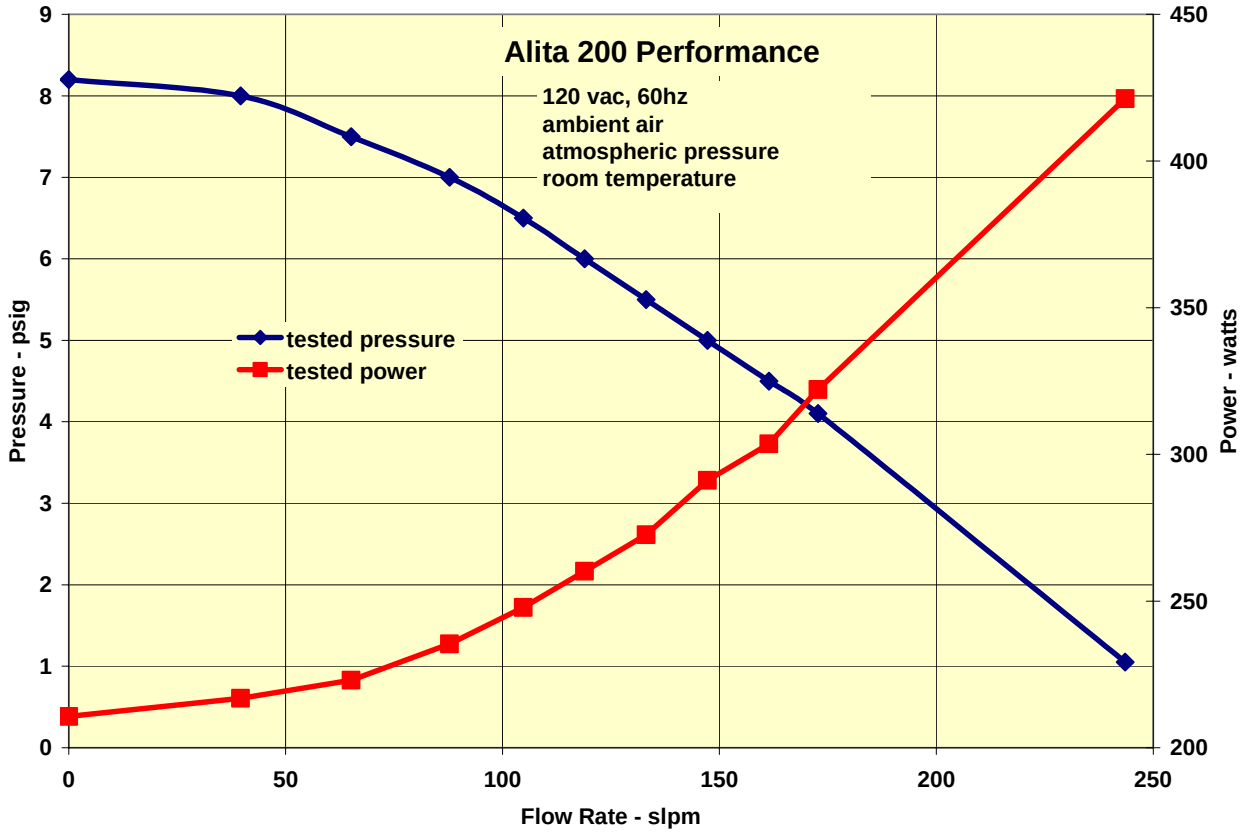

The Gast linear gas pump was tested under conditions expected for the fuel cell hydrogen recirculation. Performance data is shown in Figure 33. Pressure and flow rate performance were good within the test conditions plotted. Operation was very noisy when operating outside of these conditions. Beyond a suction pressure of 5 psig an internal resonance prevented operation. Operation was also prevented at low and high flow rates.

Figure 33 – Hydrogen Circulator Test Data

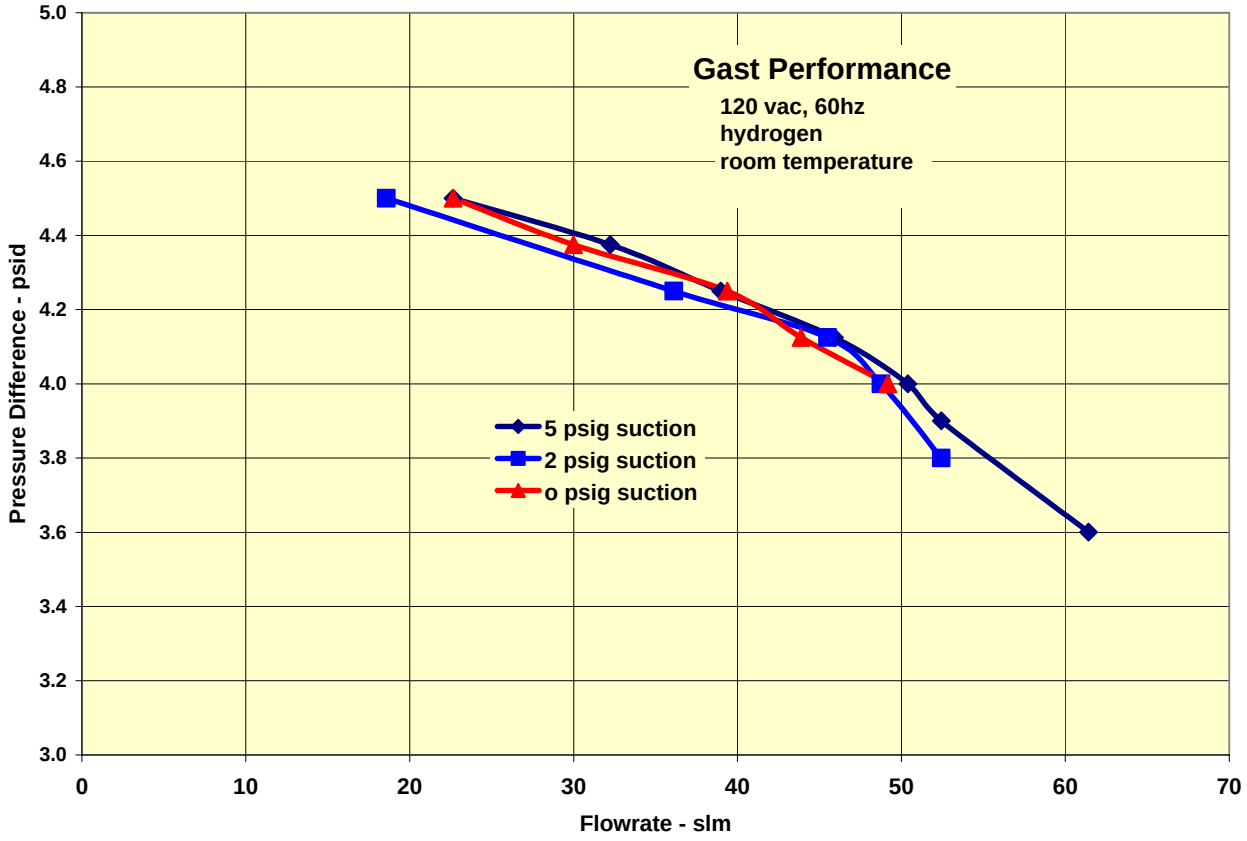

The Pumpworks linear pump was tested to simulate hydrogen storage compressor operation. The performance data is shown in Figure 34. The pump was unacceptably noisy. The pressure data at no flow falls well short of the 200 psig required for hydrogen storage. The pump stopped operating during testing and has failed to operate since. The pump is a welded assembly that cannot be repaired.

Figure 34 – Hydrogen Storage Compressor Data

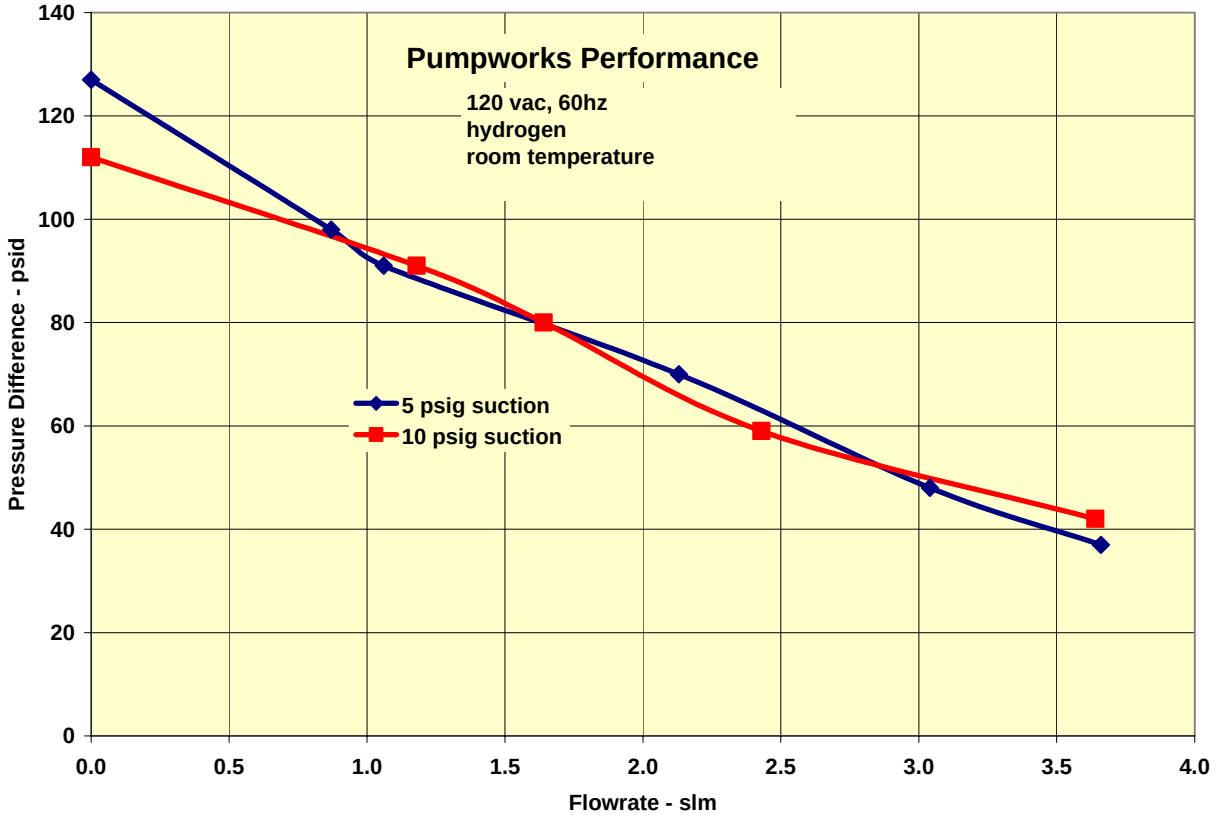

Performance data for the Pulsatron de-mineralized water pump is shown in Figure 35. The pressure and flow results are as expected. The pump operation is very quiet. Pump output is reasonably linear with control input.

Figure 35– De-mineralized Water Pump Data

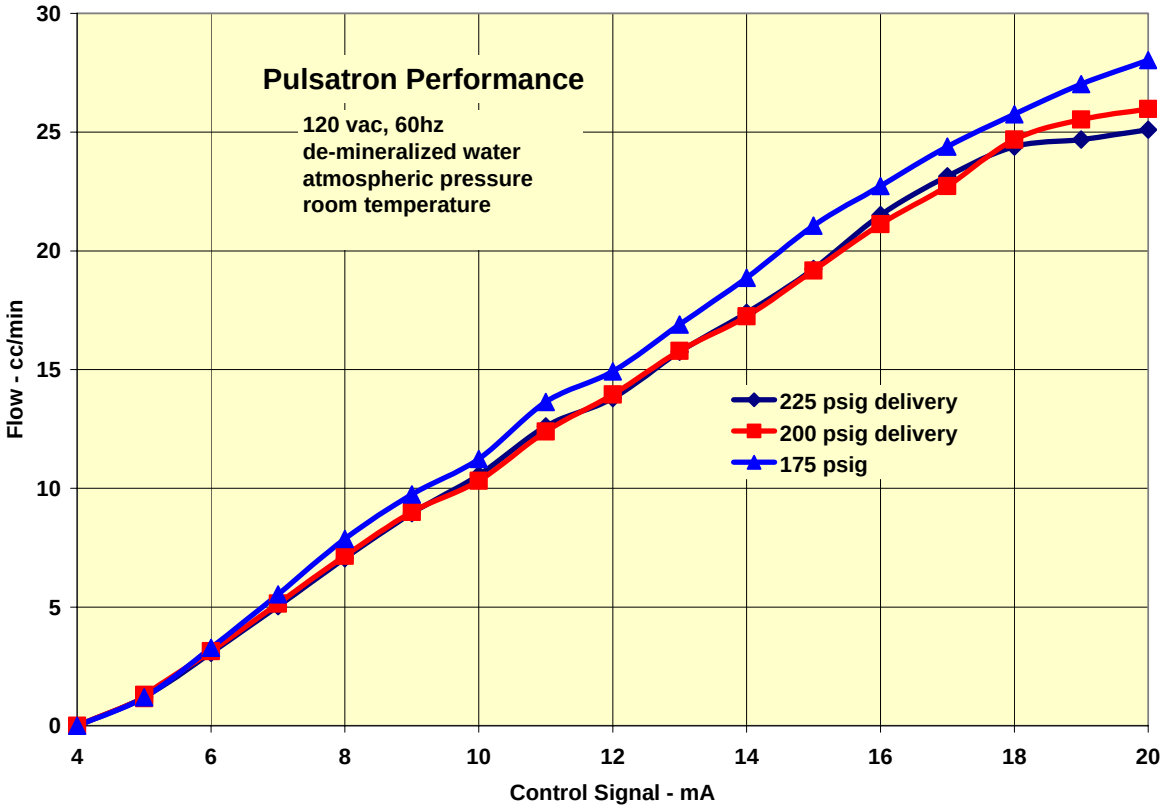

CONCLUSION

The fuel cell APU concept designed and modeled in Task 2 meets two of the major goals for the project. The fuel cell output power meets the "typical" load profile and the air emissions from the fuel processor are very favorable especially when compared to diesel idling. However, the APU fell considerably short of the weight and volume goals set in the specifications. Furthermore, due to the complexity of the system and the relatively short operating and cycle life of the catalysts used in the reformer, users will not be satisfied with the maintenance requirements.

The major challenge for continued development of a propane based APU fuel cell product with the components selected for this project is the single capacity output feature of the fuel processor. Without a process that can regulate fuel input for the fuel cell, onboard energy storage must be included in the system. The energy storage requirement becomes a significant part of the system for the system to meet a realistic electrical load profile.

The battery bank capacity requirement for an electrical storage system is relatively simple but results in a large and heavy system. Advanced battery chemistries can lighten the battery bank but are presently too expensive.

Hydrogen storage may be lighter and more compact, but increases the complexity of the system. A small, efficient hydrogen compressor needs to be identified or developed if the system is to incorporate hydrogen storage.

In conclusion, this technology requires additional development and optimization in order to advance the development of a practical and economical auxiliary power unit product for use in truck applications.

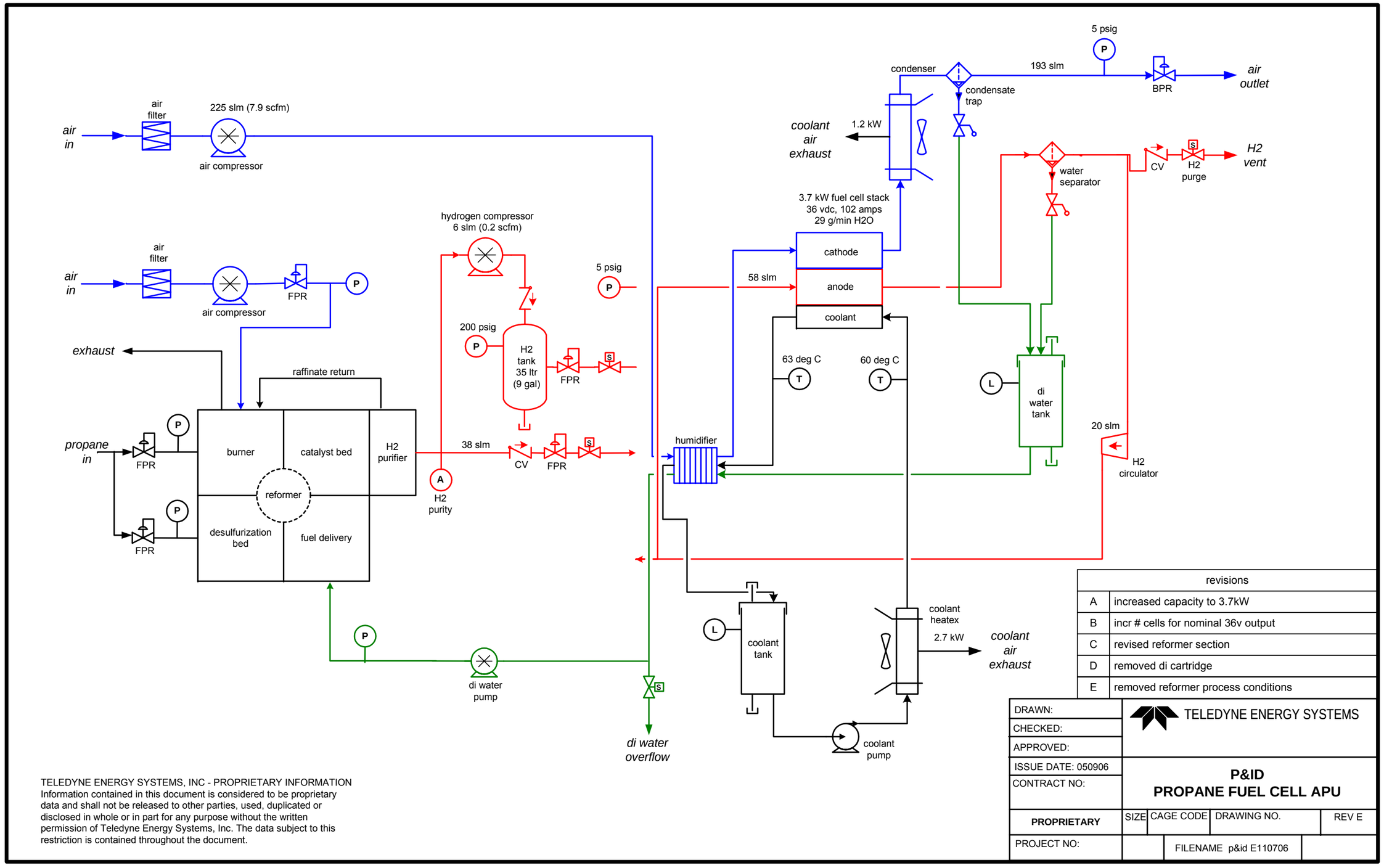

revisions	
A	increased capacity to 3.7kW
B	incr # cells for nominal 36v output
C	revised reformer section
D	removed di cartridge
E	removed reformer process conditions

DRAWN:	TELEDYNE ENERGY SYSTEMS
CHECKED:	
APPROVED:	
ISSUE DATE: 050906	**P&ID**
CONTRACT NO:	**PROPANE FUEL CELL APU**
PROPRIETARY	SIZE / CAGE CODE / DRAWING NO. / REV E
PROJECT NO:	FILENAME p&id E110706

TELEDYNE ENERGY SYSTEMS, INC - PROPRIETARY INFORMATION
Information contained in this document is considered to be proprietary data and shall not be released to other parties, used, duplicated or disclosed in whole or in part for any purpose without the written permission of Teledyne Energy Systems, Inc. The data subject to this restriction is contained throughout the document.