NTRD Program Disclaimers

1. Disclaimer of Endorsement:

The posting herein of progress reports and final reports provided to TCEQ by its NTRD Grant Agreement recipients does not necessarily constitute or imply an endorsement, recommendation, or favoring by TCEQ or the State of Texas. The views and opinions expressed in said reports do not necessarily state or reflect those of TCEQ or the State of Texas, and shall not be used for advertising or product endorsement purposes.

2. Disclaimer of Liability:

The posting herein of progress reports and final reports provided to TCEQ by its NTRD Grant Agreement recipients does not constitute by TCEQ or the State of Texas the making of any warranty, express or implied, including the warranties of merchantability and fitness for a particular purpose, and such entities do not assume any legal liability or responsibility for the accuracy, completeness, or usefulness of any information,apparatus, product, or process disclosed, or represent that its use would not infringe privately owned rights.

New Technology Research & Development Program
Grant Contract 582-5-70807-0012

Task 4 Deliverable Report
Final Report

The preparation of this report is based on work funded in part
by the State of Texas through a Grant from the
Texas Commission on Environmental Quality.

LOCOMOTIVE EXHAUST EMISSIONS TEST REPORT: RAILPOWER RP20BD AND RP20BH

***Revised* FINAL REPORT**

SwRI PROJECT 03.11873

Prepared For

Railpower Hybrid Technologies Corp
2021 Peninsula Drive
Erie, PA 16506

February 2007

LOCOMOTIVE EXHAUST EMISSIONS TEST REPORT: RAILPOWER RP20BD AND RP20BH

***Revised* FINAL REPORT**

SwRI PROJECT 03.11873

Prepared For

Railpower Hybrid Technologies Corp
2021 Peninsula Drive
Erie, PA 16506

Prepared by

Randell L. Honc, P.E.
Steven G. Fritz, P.E.

Prepared by:

Steven G. Fritz

Steven G. Fritz, P.E.
Manager, Medium-Speed Diesel Engines
Dept. of Engine and Emissions Res.

Approved:

Jeff J. White
Director, Development
Dept. of Engine and Emissions Res.

This report shall not be reproduced, except in full, without the written approval of Southwest Research Institute®.
Results and discussion given in this report relate only to the test items described in this report.

TABLE OF CONTENTS

Page

LIST OF FIGURES iv
LIST OF TABLES v
LIST OF ABBREVIATIONS vi

1.0. TECHNICAL APPROACH 1

1.1 RP20BD Development Platform 1
1.2 RP20BH Development Platform 3
1.3 Power Measurement 3
1.4 Fuel Consumption Measurement 3
1.5 Test Fuel 4
1.6 Exhaust Emissions Test Procedures 5

1.6.1 Gaseous Emissions Sampling 5
1.6.2 Particulate Emissions Sampling 5
1.6.3 Smoke Opacity Test Procedures 6
1.6.4 Duty-Cycle Weighting Factors 6

2.0. TEST RESULTS 7

LIST OF FIGURES

Figure		Page
1	Stadco RP500X Generator	2
2	Development Platform Layout	2

ACKNOWLEDGMENTS

The work reported in this revised document was performed for Railpower Hybrid Technologies Corporation, as outlined in Southwest Research Institute® (SwRI®) Proposal No. 03-44158, titled "Exhaust Emissions Testing of a Railpower RP20BD Road Switcher Locomotive to Support EPA Certification," dated September 6, 2005. The original report was submitted in April 2006 for internal use by Railpower[1].

This project was performed by the Department of Engine and Emissions Research of the Engine, Emissions, and Vehicle Research Division under the supervision of Mr. Bruce B. Bykowski. The Project Manager for SwRI was Mr. Steven G. Fritz, Manager, Medium-Speed Diesel Engines in the Department of Engine and Emissions Research. SwRI technical personnel making significant contributions to the project were Mr. Matt Dash, Senior Technician, Mr. James Height, Senior Technician, and Mr. Daryl Krenmueller, Staff Technician, all of the Department of Engine and Emissions Research.

[1] Honc, R L, Fritz, S G, "Locomotive Exhaust Emissions Test Report: Railpower RP20BD and RP20BH," Final Report, April 2006.

LIST OF TABLES

Table		Page
1	Stadco RP500X Details	1
2	Test Fuel Properties	4
3	Duty Cycles Used to Compute Weighted Composite Emissions	6
4	Exhaust Emissions over the EPA Line-Haul Cycle	7
5	Exhaust Emissions over the EPA Switch Cycle	7
6	Smoke Test Summary	7

LIST OF ABBREVIATIONS

AAR	Association of American Railroads
API	American Petroleum Institute
ASTM	American Society for Testing and Materials
bsfc	brake specific fuel consumption
BTU	British Thermal Units
CFR	Code of Federal Regulations
cm	centimeter
CO	carbon monoxide
CO_2	carbon dioxide
cSt	centistokes
EP	end point
EPA	Environmental Protection Agency
°F	degrees Fahrenheit
f/a	mass fuel to dry air ratio
FBP	final boiling point
FTP	Federal Test Procedure
g	gram
gal	gallon
H_2O	water
HC	hydrocarbons
HFID	heated flame ionization detector
hp	horsepower
hr	hour
IBP	initial boiling point
in	inch
kW	kilowatt
lb	pound
min	minute
mm	millimeter
NDIR	non-dispersive infrared
NO_X	oxides of nitrogen
O_2	Oxygen
OEM	original equipment manufacturer
PHS	Public Health Service
PM	particulate matter
rpm	revolutions per minute
sec	seconds
SwRI®	Southwest Research Institute®
TDC	top dead center
wt	weight
%	percent

1.0 TECHNICAL APPROACH

Presented below is an overview of the technical approach used to conduct exhaust emissions testing on two prototype locomotive power systems. The Railpower RP20BD locomotive development platform utilizes three "stand alone" diesel engine-powered generators to collectively produce the power equivalent to a conventional switcher or shunting locomotive. The Railpower RP20BH locomotive development platform utilizes two generators and would include a hybrid battery pack in the production version.

Included is a description of the development platform used for testing, method of measuring generator power output, fuel consumption measurement, the test fuel properties, exhaust emissions test procedures, analytical procedures, particulate measurement procedures, and smoke opacity test procedures.

1.1 RP20BD Development Platform

The Railpower RP20BD locomotive development platform was powered by three Stadco RP500X generators. The Stadco RP500X specifications are presented in Table 1. A picture of one of the generators is presented in Figure 1. The generators are "stand alone" units with individual engine controls and cooling systems. A common fuel supply was used to supply fuel to each generator and overall system fuel consumption was measured. Additionally, a common exhaust manifold was fabricated to collect the individual generator exhaust for sampling as a combined unit.

TABLE 1. STADCO RP500X DETAILS

Generator Model Number	Stadco RP500X
Phase	3-phase
Frequency	variable
Continuous Amps	415 @ 0.8PF 600 V
Continuous Power	345 kW @ 1,900 rpm
Maximum Speed	1,900 rpm
Engine Model	Deutz BF8M1015CP
Intermittent Gross Power	440 kW @ 1900 rpm
Continuous Gross Power	383 kW @ 1900 rpm
Engine Displacement	15.9 L

Figure 1. Stadco RP500X Generator

The Stadco generator 3-phase AC output was input to individual DC rectifiers and placed on a common DC bus. The DC bus power was dissipated by a GE EM99 load bank. The EM99 load bank has adjustable resistance settings. The EM99 was set to a resistance value of 0.347 ohms for the test program. The DC power to the EM99 load bank was pulse width modulated by a pair of DC choppers. A pair of D77 traction motor field coils were used to "soften" the inrush current generated when the DC choppers were turned on. A schematic of the development platform is presented in Figure 2.

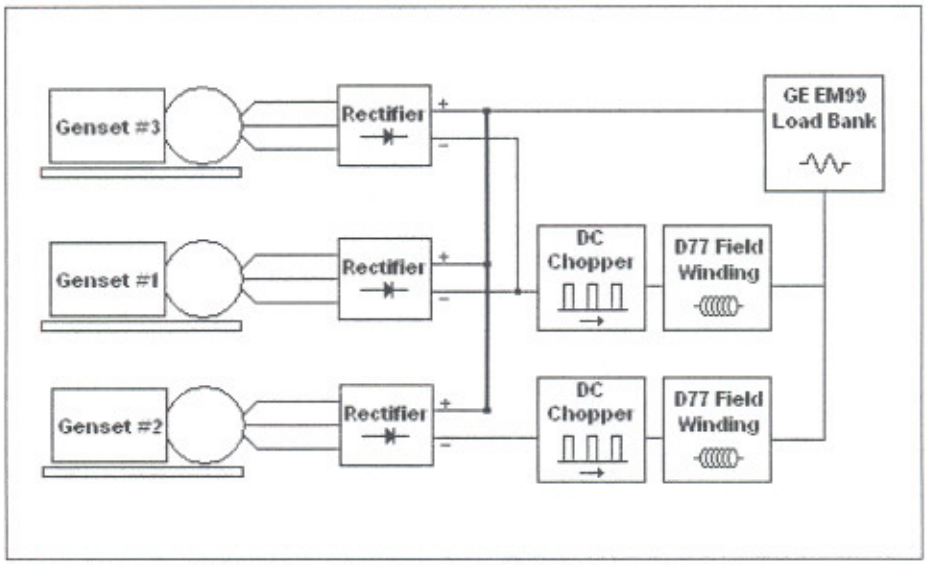

Figure 2. Development Platform Layout

1.2 RP20BH Development Platform

The Railpower RP20BH locomotive development platform will utilize two generators and a battery pack in the production version. For the purpose of this test program, two of the three generators of the RP20BD development platform were used during testing. The RP20BH development platform was tested under a simulated low state of charge (LSOC) and a high state of charge (HSOC) battery condition. These two conditions represent the two extremes of operation.

Under the HSOC condition, it was assumed that the batteries were fully charged and all the generator output was devoted to tractive effort. In addition, the batteries would also supplement the power of the two generators to produce the same power as the RP20BD.

Under the LSOC condition, it was assumed that the batteries required 112.5 kW of power to recharge. At the higher notches, full power was devoted to tractive effort while battery charging was secondary.

For testing purposes, no supplemental power from the batteries was taken into account and the unit was power limited to the output of the two generators only.

1.3 Power Measurement

Engine flywheel (gross) power was determined by measurement of the individual Stadco generator 3-phase AC outputs. The observed power was measured using Ohio Semitronics PC5 3-phase AC watt transducers. EPA test procedures call for measurement of observed power, and for the manufacturer to apply a known generator efficiency to calculate gross power. For the Stadco generator, an efficiency of 93.9 percent was used for all test points. Auxiliary systems (chopper cooling system, and engine radiator fans) were powered externally and not included in the determination of gross power. Power and fuel rates were recorded as observed values.

Conventional switcher or shunting locomotives in North America which are powered by a single large engine operate at eight distinct power (notch) settings, plus idle, at power ratings of 1125 to 1500 kW. The target power levels provided by Railpower for the RP20BD and RP20BH at each notch setting can be found in the original report[1].

Under the RP20BH LSOC condition, the generator(s) provided an additional 112.5 kW of power for battery charging at notch 1 to 4 and idle. Only 53 kW is available for battery charging at notch 5 since tractive effort has priority over battery charging. No available power is used for battery charging during notch 6, 7, and 8.

1.4. Fuel Consumption Measurement

A common fuel supply was used to supply fuel to each generator. Diesel fuel consumption was measured on a mass basis, using a mass flow meter. The system was equipped with a heat exchanger to control fuel supply temperature. Hot return fuel which would normally return to the locomotive fuel tank was cooled before returning to the fuel measurement reservoir ("day tank") to assure a consistent fuel supply temperature at the engine.

1.5. Test Fuel

For this work, a diesel fuel meeting EPA's specification for locomotive emissions test fuel was used for testing. Properties of the test fuel are given in Table 2. The sulfur level of the test fuel was 0.2791 weight percent (2,791 ppm), which is roughly at the mid-point of the EPA specification of 0.2 to 0.4 weight percent sulfur.

TABLE 2. LOCOMOTIVE TEST FUEL PROPERTIES

Determinations	ASTM Test Method	Locomotive Cert. Fuel EM-3137D-F	EPA Locomotive Spec. [a]
API Gravity @ 60°F	D4052	36.1	32 – 37
Specific gravity		0.8443	Ns
Viscosity @ 40°C (cSt)	D445-83	2.583	2.0 - 3.2
Sulfur (wt%)	D2622-94	0.2791	0.2 - 0.4
Cetane Index	D976	47.8	40 – 48
Cetane Index	D4737	47.8	40 – 48
Cetane Number	D613-84	46.9	40 – 48
Heat of Combustion	D240		
Gross (BTU/lb)		19,491	Ns
Net (BTU/lb)		18,285	Ns
Carbon-Hydrogen Ratio	D5291		
% Carbon		86.37	Ns
% Hydrogen		13.22	Ns
Hydrogen/Carbon Ratio		1.82	Ns
SFC Aromatics	D5186-96		
Total Mass %		31.34	27 min.
Total Volume Percent [b]		30.04	
PNA Mass %		9.37	
Hydrocarbon Type	D1319-84		
Aromatics (%)		32.1	Ns
Olefins (%)		3.1	Ns
Saturates (%)		64.8	Ns
Flash Point (°F)	D93-80	154	130 min.
Distillation	D86-96		
	% Recovered		Temp. °F
	IBP	346	340 – 400
	10	415	400 – 460
	50	498	470 – 540
	90	599	560 – 630
	EP	654	610 – 690

Note: a – Diesel fuel for locomotive testing as specified by EPA in 40 CFR 92, §92.113, Table B113-1.
b – Aromatic hydrocarbons expressed in percent volume = 0.916 x (aromatic hydrocarbons expressed in percent weight) + 1.33, per California Code of Regulations, Title 13, §2282 (c)(1).
Ns – not specified
Nd – not determined

1.6 Exhaust Emissions Test Procedure

A common exhaust manifold was fabricated to collect the individual generator exhaust for sampling as a combined unit. Exhaust emission tests were performed using the locomotive Federal Test Procedure (FTP) detailed in the U.S. Code of Federal Regulations (CFR), Title 40, Part 92, "Emission Standards for Locomotives and Locomotive Engines."

1.6.1 Gaseous Emissions Sampling

A gaseous sample probe was designed using EPA locomotive test specifications. Gaseous emissions were sampled within the common exhaust stack. A heated line was used to transfer the raw exhaust sample to the emission instruments for analysis. Measured gaseous emissions included hydrocarbons (HC), carbon monoxide (CO), carbon dioxide (CO_2), oxygen (O_2), and oxides of nitrogen (NO_X).

Hydrocarbon concentrations in the raw exhaust were determined using a Rosemount Analytical model 402 heated flame ionization detector (HFID), calibrated on propane. NO_X concentration in the raw exhaust was measured with a Rosemount model 955 chemiluminescent analyzer. NO_X correction factors for engine intake air temperature and ambient air humidity were applied as specified by EPA in 40 CFR §86.132(d). Concentrations of CO and CO_2 in the raw exhaust were determined by non-dispersive infrared (NDIR) instruments.

Gaseous mass emission rates were computed using the measured concentration, the observed (measured) fuel consumption rate, and calculated engine airflow. Following the FTP, engine airflow was not directly measured in this test program. Instead, engine airflow was determined using a carbon balance of the carbon-containing constituents in the exhaust (CO_2, CO, and HC) to compute the fuel/air ratio (f/a). Engine airflow rate was then computed using the measured fuel consumption rate and the computed f/a ratio.

1.6.2 Particulate Emissions Sampling

Particulate emissions were measured at each test point using a "split then dilute" technique, in which a portion of the raw locomotive exhaust was "split" from the total flow and mixed with filtered air in an 8-inch diameter dilution tunnel. The split sample was transferred to the dilution tunnel through a 2-inch diameter stainless steel tube that was insulated and electrically heated to 375°F.

A particulate sample was extracted from the dilute exhaust stream within the dilution tunnel through sample probes. Particulate was accumulated on 90 mm fluorocarbon-coated glass fiber filters (Pallflex T60A20) at a target filter face velocity of 70 cm/s. The filters were mounted in stainless steel filter holders and connected to the dilution tunnel. Following the FTP, PM sampling began ten seconds after a throttle notch change, and continued for five minutes. Particulate filters were preconditioned and weighed before and after testing, following the FTP. The particulate mass emission rate was computed using the increase of mass on the filters, the volume of dilute exhaust drawn through the filters, and dilution air and raw exhaust flow parameters.

opacity meter (smokemeter) mounted at the outlet of the common exhaust stack. This smokemeter used standard PHS smokemeter optics and electronics, but was modified to a 1-meter diameter to accommodate larger exhaust plume diameters. The construction, calibration, and operation of the smokemeter adhered to the FTP.

The smokemeter was aligned with the long axis of a rectangular exhaust stack outlet, resulting in a through-exhaust path length of approximately 39 inches. The center of the light beam was positioned 5 (±1) inches above the outlet of the exhaust stack extension. A smokemeter control unit was located in the control building. Voltage output proportional to opacity was recorded on a strip chart. Smoke opacity was continuously monitored during the EPA Locomotive Test Sequence.

1.6.4 Duty-Cycle Weighting Factors

Table 3 gives the two duty cycles that were applied to the individual notch data points to compute duty-cycle weighted composite results. The two EPA cycles are specified in Table B132-1 of §92.131 of CFR Title 40, Part 92 of the FTP.

TABLE 3. DUTY CYCLES USED TO COMPUTE WEIGHTED COMPOSITE EMISSIONS

Throttle Notch Setting	EPA Line-Haul Cycle	EPA Switch Cycle
*Low Idle	19.0 %	29.9 %
*Idle	19.0 %	29.9 %
*Dynamic Brake	12.5 %	0.0 %
Notch 1	6.5 %	12.4 %
Notch 2	6.5 %	12.3 %
Notch 3	5.2 %	5.8 %
Notch 4	4.4 %	3.6 %
Notch 5	3.8 %	3.6 %
Notch 6	3.9 %	1.5 %
Notch 7	3.0 %	0.2 %
Notch 8	16.2 %	0.8 %
TOTAL	**100.0 %**	**100.0 %**

* The RP20BD and RP20BH are not Low Idle and Dynamic Brake equipped and were combined with Idle per the FTP.

2.0 TEST RESULTS

Table 4 summarizes the EPA FTP exhaust emission results for the line-haul cycle, along with the EPA Tier 2 maximum allowable levels for the RP20BD, and for the RP20BH at a High SOC and at a Low SOC. Table 5 gives the EPA switch cycle results. Detailed data sheets for the tests can be found in the original report[1].

TABLE 4. EXHAUST EMISSIONS OVER THE EPA LINE-HAUL CYCLE

Locomotive	EPA Freight-Cycle Weighted Emissions, g/hp-hr			
	HC	CO	NOx	PM
EPA Tier 2 Maximum	*0.30*	*1.5*	*5.5*	*0.20*
RP20BD	0.16	0.8	3.9	0.12
RP20BH HSOC	0.16	0.8	3.8	0.15
RP20BH LSOC	0.17	0.4	4.1	0.12

TABLE 5. EXHAUST EMISSIONS OVER THE EPA SWITCH CYCLE

Locomotive	Average EPA Switch-Cycle Weighted Emissions, g/hp-hr			
	HC	CO	NOx	PM
EPA Tier 2 Maximum	*0.60*	*2.4*	*8.1*	*0.24*
RP20BD	0.27	0.7	5.0	0.14
RP20BH HSOC	0.25	0.7	4.7	0.18
RP20BH LSOC	0.21	0.5	4.6	0.13

Table 6 summarizes the smoke opacity results from the FTP smoke test. Table 6 also gives the maximum opacity allowed by EPA for Tier 2 locomotives.

TABLE 6. SMOKE TEST SUMMARY

Locomotive	Maximum Steady-State Smoke, Percent Opacity	30-Second Peak, Percent Opacity	3-Sec. Peak, Percent Opacity
EPA Tier 2 Maximum	*20*	*40*	*50*
RP20BD	11	15	19
RP20BH HSOC	8	19	26
RP20BH LSOC	15	17	32