NTRD Program Disclaimers

1. Disclaimer of Endorsement:

The posting herein of progress reports and final reports provided to TCEQ by its NTRD Grant Agreement recipients does not necessarily constitute or imply an endorsement, recommendation, or favoring by TCEQ or the State of Texas. The views and opinions expressed in said reports do not necessarily state or reflect those of TCEQ or the State of Texas, and shall not be used for advertising or product endorsement purposes.

2. Disclaimer of Liability:

The posting herein of progress reports and final reports provided to TCEQ by its NTRD Grant Agreement recipients does not constitute by TCEQ or the State of Texas the making of any warranty, express or implied, including the warranties of merchantability and fitness for a particular purpose, and such entities do not assume any legal liability or responsibility for the accuracy, completeness, or usefulness of any information,apparatus, product, or process disclosed, or represent that its use would not infringe privately owned rights.

New Technology Research & Development Program
Grant Contract 582-5-70807-0018

Task 1 Deliverable

The preparation of this report is based on work funded in part
by the State of Texas through a Grant from the
Texas Commission on Environmental Quality.

ADVANCED ENERGY SYSTEMS

GTI REPORT

Natural Gas Liquefaction System Controls

GTI Project Number 20285

TCEQ Contract Number 582-5-70807-0018

June 2006

Submitted to:
Texas Commission on Environmental Quality
Ms. Kate Williams

Prepared by:
Ken Kriha
William Liss
David Zuckerman
Brian Weeks

Gas Technology Institute
1700 South Mount Prospect Road
Des Plaines, IL 60018
www.gastechnology.org

Natural Gas Liquefaction System Controls

INTRODUCTION

SMALL-SCALE LIQUEFACTION TECHNOLOGY DESCRIPTION

GTI has developed a pre-commercial small-scale natural gas liquefaction system (Figure 1). This nominal 1000-gallon per day system was previously operated by GTI on a manual basis for over two years, with over 90 start-stop cycles. Within the program sponsored by the TCEQ, the small-scale liquefier system control configuration was upgraded to permit automated, unattended operation.

Figure 1: GTI Skid-Mounted Liquefier

GTI's small-scale liquefier is designed to achieve the cooling and phase change in one compact heat exchanger. The approach is based, in large part, on using standard refrigeration equipment and cycles. However, instead of using a single refrigerant compound, the cycle relies on a multi-component refrigerant mixture to achieve a vertical temperature profile in the heat exchanger that can pull down the natural gas to temperatures well below -220°F.

Figure 2 shows the temperature and pressure relationship of the refrigeration cycle. The specialized mixture of refrigerant components will selectively condense and subsequently boil in the multi-pass heat exchanger used in the liquefaction system.

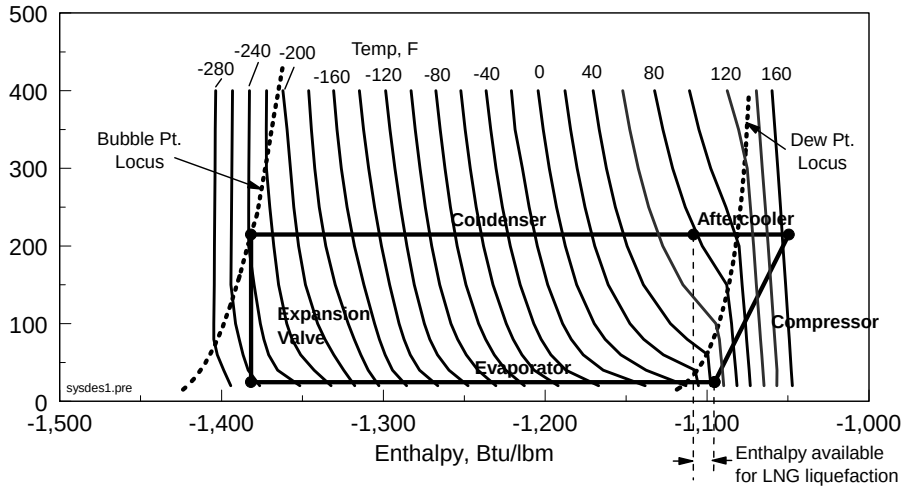

Figure 2: Refrigerant Pressure-Enthalpy Diagram

The following is a listing of the key subsystems and system components. Figure 3 shows a basic schematic of the liquefaction equipment.

- Refrigerant compressor
- Lubricating oil, oil separator and filters (optional)

- Evaporative cooler
- Main heat exchanger
- Expansion valve
- Prime mover (engine or electric motor)

The balance of plant for a total system includes several other key pieces of equipment, such as the natural gas desulfurization towers, temperature swing adsorption (TSA) towers for water and CO_2 control, and bulk LNG storage tank.

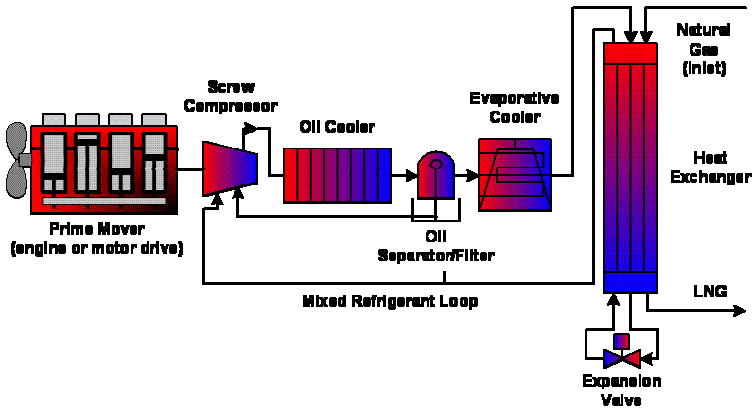

Figure 3: Schematic of Liquefaction Refrigeration Cycle

A rendering of the three-dimensional drawing of the 200 hp liquefier system is shown in Figure 4.

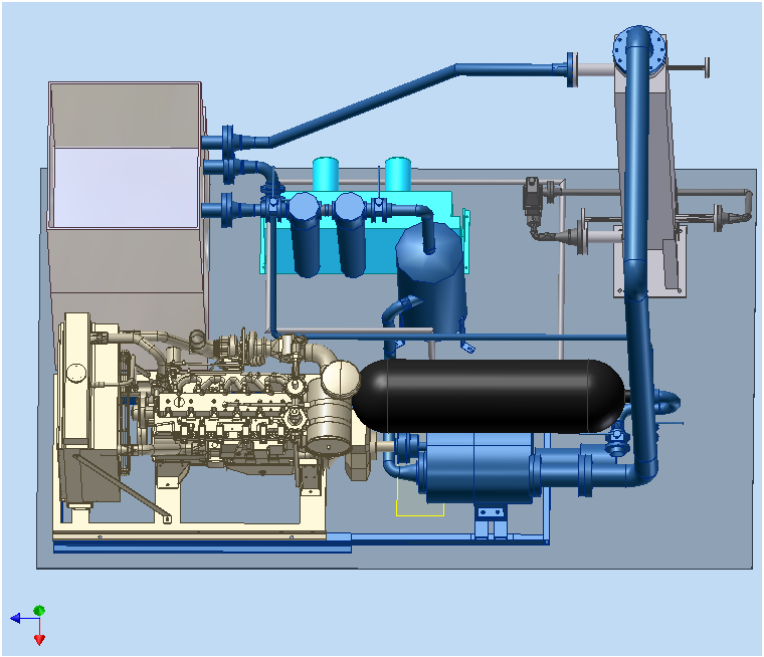

Figure 4: 200 Hp System Design Schematic

System Control and Operation

System Control and Operation Overview

The detailed flowcharts and control logic for the refrigerant cycle are available for review by TCEQ personnel upon request. The logic includes details for the start up, production, and shutdown of the LNG refrigerant loop. The following is a brief description.

Description of System Start-Up

When running unattended, an LNG liquid level switch will initiate start-up of the liquefier. Upon receipt of the start signal from the switch, the liquefier start-up algorithm will run. The first action of the algorithm is to turn on the evaporative cooler. A check of the ambient temperature is performed in order to determine whether or not water will need to be pumped into the evaporative cooler. At temperatures below 20F, water is not needed to provide the desired level of refrigerant cooling.

The control system will then send a start signal to the engine compressor/driver control system (from Murphy Controls). When the Murphy system completes its start-up procedure, a “ready” signal will be output to the refrigerant control system. The sending of this signal will indicate that the compressor, driver, and oil system have all started and warmed. The signal will also indicate that the clutch has been engaged and the compressor is fully unloaded.

The refrigerant cycle control system will then take control of the compressor’s slide valve in order to complete the start-up procedure. The load on the compressor is gradually increased as the discharge pressure and temperature are monitored to assure they remain below safe levels. If the discharge pressure or temperature readings exceed their specified limits, the expansion valve is adjusted to bring the parameter back to the desired level.

The start-up procedure is complete when the compressor is fully loaded.

Production

With the compressor fully loaded the expansion valve is adjusted to bring the main heat exchanger to liquefaction temperatures. Again, adjustments to the expansion valve are performed while monitoring the temperature and pressure of the refrigerant at the discharge of the compressor. A PID control loop is used to control the position of the expansion valve based on the suction pressure. A suction pressure of 10 psig with the GTI refrigerant gas composition will cool the main heat exchanger to liquefaction temperatures. A 15-minute timer is activated when a skin thermocouple attached to the piping at the outlet of the expansion valve reaches minus -280F. During this time, the desired temperature profile up the heat exchanger will be established and then the system will be ready to liquefy natural gas.

The natural gas production will be controlled by another PID loop. The process variable for this loop will be the temperature of the LNG at the heat exchanger outlet. The control variable for this loop will be the position of the LNG flow control valve. The set point for the temperature of the LNG will be determined from the pressure of the natural gas at the inlet of the main heat exchanger. The bubble point temperature of a natural gas with a “mean” composition will be determined from this pressure. When the temperature of the LNG becomes warmer than the bubble point temperature, the flow control valve will slow the flow of natural gas.

While the LNG is being produced, parameters of the refrigerant loop will be monitored for alarm conditions. If an alarm condition occurs in the compressor discharge temperature and pressure, the compressor suction pressure, the heat exchanger inlet temperature, or the flow of natural gas to be liquefied, the program will take action to correct the alarm as well as provide a visual

indication that an alarm condition has been met. The specific actions are detailed in the Diagnosis and Safety discussion below.

The refrigerant control loop remains in production mode until a stop signal from a manual stop switch or a stop signal is received from the level switch of the liquid storage tank.

Shut Down

The first steps in the shut down procedure are to unload the compressor and to close the natural gas solenoid valve. When the compressor is less than 10 psig loaded, the PID control loops for the expansion valve and LNG control valve can be disabled. The expansion valve is then opened to 100%. When the difference between the discharge pressure and the suction pressure of the compressor becomes less than 20 psig, the stop signal can be sent to the compressor/driver control system and the evaporative cooler can be turned off.

Upon completion of the shut down procedure, both the refrigerant and the compressor/driver control systems will be in placed in stand-bye mode.

Diagnostics and Safety

The refrigerant control algorithm has built in safety and diagnostic features. The system will also accept input from the compressor/driver control system. Any alarm condition that would trigger a shut down of the compressor/driver will be relayed to the refrigerant control system. When possible, enough time will be given to unload the compressor prior to shutting down the system.

High Discharge Pressure or Temperature

During the production cycle the control algorithm monitors the discharge pressure and temperature of the compressor to assure the system stays within the safety limitations of the equipment. The refrigerant loop has been designed to allow for a maximum pressure of 350 psig. The maximum operating temperature of the loop is 240F. Operating at temperatures above 240F may cause premature degradation of the oil.

The actions for high discharge pressure or temperature alarms are the same for both of these conditions. First, a warning light will illuminate to indicate that the system has entered an alarm condition. The PID control is then disabled for both the natural gas control valve and the LNG expansion valve. This will allow the expansion valve to be opened. The expansion valve will be opened until the alarm condition is cleared or the expansion valve is opened 100%. If the alarm condition clears, the program will try to restart. If the expansion valve is at 100% and the alarm condition still exists the load on the compressor will be decreased. If the load on the compressor is reduced below 50% the condition will be considered uncorrectable and the system will shut down.

Low Suction Pressure

An alarm condition will be reached if the suction pressure falls below 5 psig. This alarm will ensure a positive pressure is always maintained on the compressor. The action for correcting low suction pressure is the same as the action needed to correct the high discharge pressure and temperature.

High Heat Exchanger Inlet Temperature

The main heat exchanger inlet temperature is monitored for diagnostic purposes while LNG is being produced. The heat exchanger inlet temperature is a key variable for LNG production. If

this temperature is too high the production of LNG will be very low. The function of the evaporative cooler is to maintain the temperature of the refrigerant entering the heat exchanger within 25 degrees of the ambient temperature. A refrigerant temperature in excess of 130F may indicate that there is an issue with the evaporative cooler.

When the heat exchanger inlet temperature exceeds 130F a warning light will turn on. This light may indicate that the fan or water pump on the evaporative cooler is not functioning. If the condition persists for 15 minutes an alarm condition will be activated and the system will shut down. If during the 15 minute timer the temperature of the refrigerant inlet exceeds 140F the alarm condition will be immediately triggered. If the temperature falls below 130F, the process will continue and the 15 minute timer will be reset.

Natural Gas Flow Rate

A flow switch in the natural gas line down stream of the clean up system and upstream of the heat exchanger will monitor the availability of natural gas to the heat exchanger. If the flow control valve is calling for natural gas and the flow switch indicates that there is no flow, a warning signal will be displayed. The warning will indicate a possible issue with the gas clean up system or natural gas supply solenoid. The absence of flow of natural gas does not pose a safety issue, however, if natural gas is not being delivered to the heat exchanger the system does not need to be on.

A fifteen minute timer will start when the no flow condition is detected. If the condition is not resolved in fifteen minutes, the system will shut down and display an error signal.

Control System Hardware Upgrades

There were a variety of system upgrades that were made by GTI to enable the liquefier to operate in an automated fashion. The following is a pictorial overview of the installed equipment.

Engine Controller

A packaged engine controller was obtained from Peaker Services, Inc. This was designed and custom fabricated to meet the control and operation requirements of the Cummins 8.3 spark ignited natural gas engine used in this system. The hardware is based on controls equipment from FW Murphy, Woodward Governor, and Altronic. Figure 5 shows pictures of the installed E-Guard control package. Figure 6 shows a picture of the engine with newly installed controls features, including an actuated clutch (red device in background) to engage the engine and screw compressor. Note the use of quick connect couplings on the controller network to allow the system to be quickly de-coupled and re-connected after shipment to a new site.

Figure 5: New Natural Gas Engine Controller

Figure 6: Cummins Natural Gas Engine With New Controls

Figure 7 shows a detailed schematic of the wiring diagram for the new engine controller.

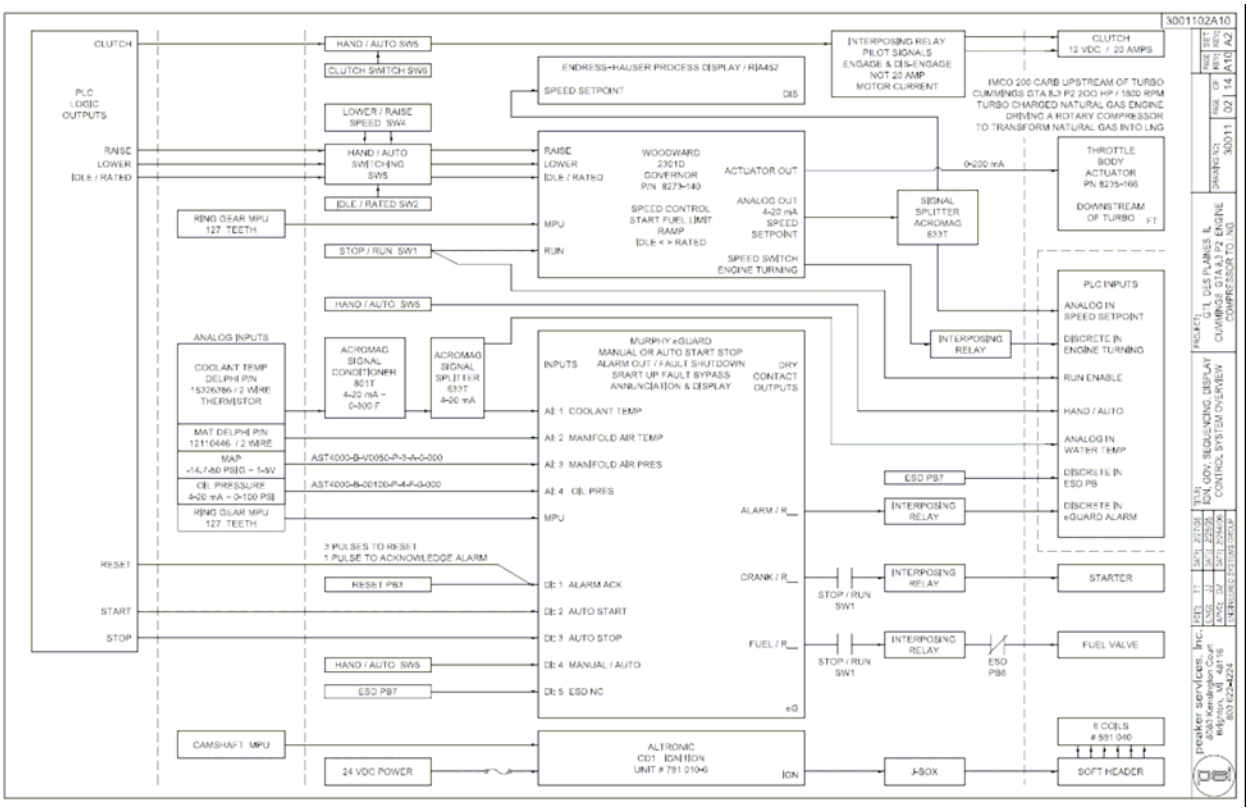

Figure 7: New Engine Control Schematic

<u>Temperature Swing Adsorption Controls</u>

Major upgrades were made to enable the tri-tower temperature swing adsorption system to function in an automated fashion. This effort was begun by building a manifold assembly to enable the sequenced valve operation required to allow tri-tower operation. Figure 8 shows the basic natural gas flow in the tri-tower system. In this system, each tower is simultaneously operating in one of three modes: adsorption, heating (desorption), and cool down. These three unit operations will cycle between each of the three towers on a periodic basis (e.g., 4.3 hours in the example shown below). This is able to effect removal of carbon dioxide and water to prevent freezing problems in the liquefier.

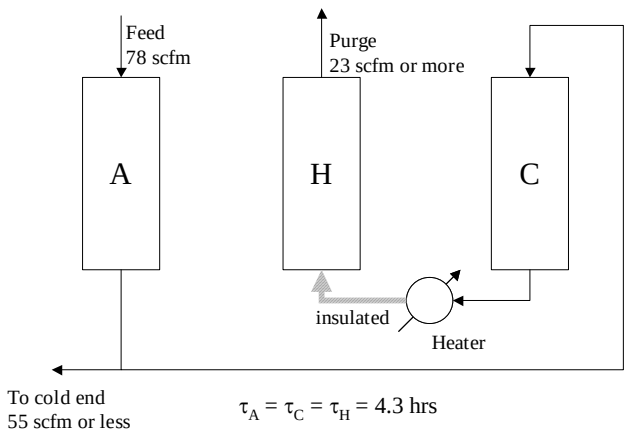

Figure 8: Series Cool-Heat Regeneration Scheme

Figure 9 shows a picture of the tri-tower TSA system with the installed manifold of air-actuated control valves. There are a total of 18 air actuated valves that provide the time sequenced switching required for this system.

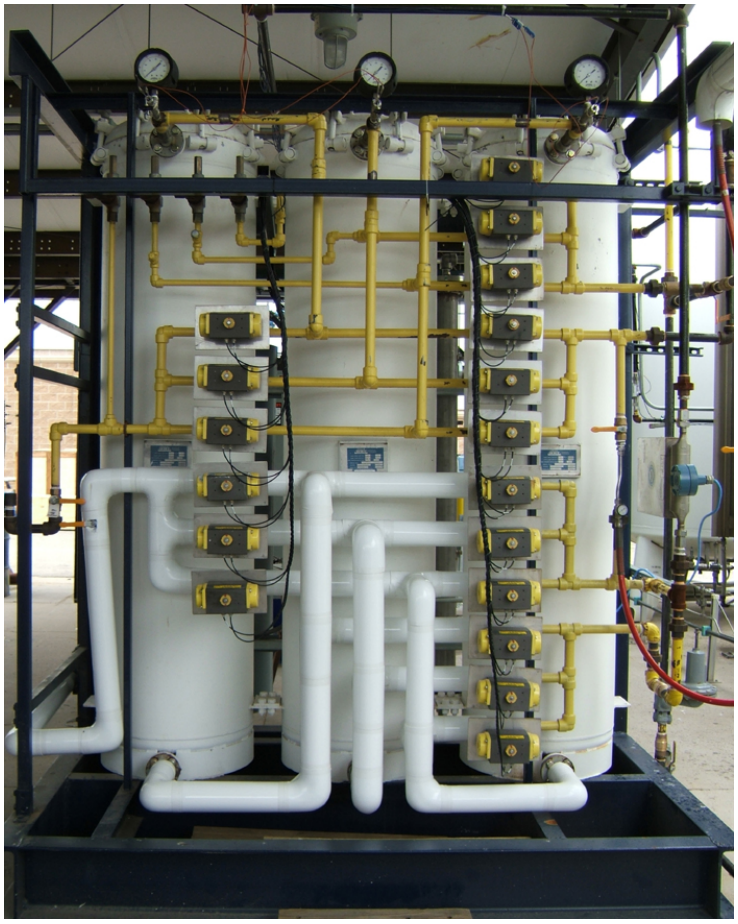

Figure 9: TSA System and Air-Actuated Control Valves

A feature of the TSA control system is an electric heater used to ensure adequate temperature is obtained to effect the TSA desorption cycle that results in removal of trapped carbon dioxide and water. Figure 10 shows a picture of the TSA heater and controller.

Figure 10: TSA Regeneration Heater and Controller

Upgrades were also made for the screw compressor controls and actuators. Figure 11 shows a picture of the Hartford screw compressor (used to recompress the refrigerant mixture) as well as the new actuator (in red) installed to engage the engine clutch. This clutch assembly is needed to allow the natural gas engine to freely start without a load connected to the drive shaft.

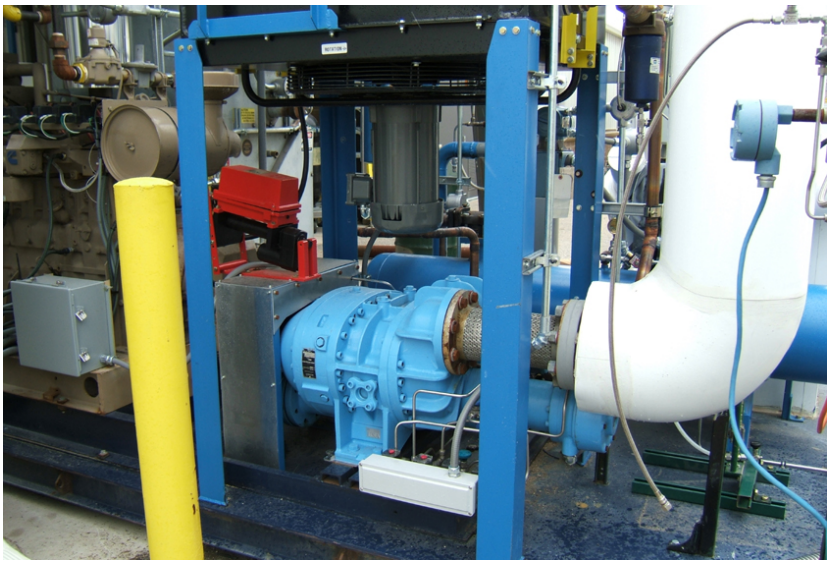

Figure 11: Screw Compressor

Figure 12 shows pictures of the LNG product control valve (in yellow) and the cryogenic Coriolis mass flow meter used to provide real-time meausement of LNG production.

Figure 12: Control Valve and Cryogenic Coriolis Meter

Figure 13 shows a picture of on-skid pressure gauges and an electrical box used to provide for data acquisition, monitoring, and control input/output.

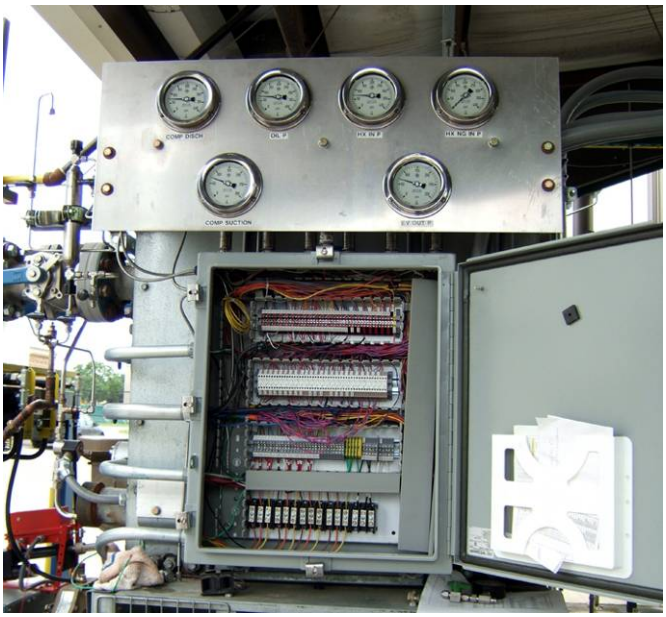

Figure 13: Manual Pressure Gauges and Control/Monitoring Inputs

Figure 14 shows a picture of the master control box that connects to various distributed controllers (e.g., engine, compressor, gas clean-up system, etc).

Figure 14: Master Control and Relay Box (right)

Figure 15 shows an overall picture of the small-scale liquefier skid and its controls. The liquefier skid is very compact, with dimensions of approximately 8’ by 14’. This is complemented by the gas clean-up system skid (approximately 5’ by 8’) that contains the desulfurization and TSA clean-up towers (shown previously in Figure 9).

Figure 15: Complete Small Scale Liquefier System