GRIDbot Electric Vehicle Service Equipment Installation

Final Report

for:

New Technology Research and Development Program

582-11-11141-3264

Submitted by:
GRIDbot, LLC

Principal Investigators:
Richard Donnelly, GRIDbot
Christine Herbert, Good Company Associates
David Hitchcock, HARC

June 29, 2012

The preparation of this report is based on work funded in part

by the State of Texas

through a Grant from the Texas Commission on Environmental Quality

Table of Contents

TABLE OF FIGURES ..... **III**

ABSTRACT/EXECUTIVE SUMMARY **1**

INTRODUCTION/BACKGROUND **3**

PROJECT OBJECTIVES/TECHNICAL APPROACH **4**

TASKS **5**

TASK 1 5
Planning and design *5*
TASK 2 10
Site installation and data collection for first group of charging stations *10*
TASK 3 16
Interim Evaluation of First Group of Charging Stations *16*
TASK 4 18
Site Installation and Data Collection for Second Group of Charging Stations *18*
TASK 5 22
Data Collection and Analysis *22*
TASK 6 24
Reporting and Program Requirements *24*

DISCUSSION/OBSERVATIONS **24**

OBJECTIVES VS. RESULTS 24
CRITICAL ISSUES 25
TECHNICAL AND COMMERCIAL VIABILITY OF THE PROPOSED APPROACH 25
SCOPE FOR FUTURE WORK 25

INTELLECTUAL PROPERTIES/PUBLICATIONS/PRESENTATIONS **26**

EV PRESS RELEASE AND PUBLIC EVENT 26

SUMMARY/CONCLUSIONS ..... **26~~27~~**

DATA COLLECTION 27
USER ADOPTION 27
GRIDBOT TECHNOLOGY ..... 27~~28~~

ACKNOWLEDGEMENTS **28**

REFERENCES ..... ERROR! BOOKMARK NOT DEFINED.~~28~~

APPENDICES **29**

APPENDIX A: GRIDBOT UP100J – STATION ANATOMY 30
APPENDIX B: GRIDBOT UP100J SPECIFICATIONS SHEET 31
APPENDIX C: GRIDBOT INSTALLATION MANUAL 32
APPENDIX D: CITY OF HOUSTON EV CHARGING TROUBLESHOOTING GUIDE 33
APPENDIX E: CITY OF HOUSTON DRIVER CHARGING INSTRUCTIONS 34
APPENDIX F: GRIDBOT MARKET POTENTIAL REPORT 35
APPENDIX G: HOUSTON ADVANCED RESEARCH CENTER FINAL REPORT 36

Table of Figures

Figure 1. GRIDbot's model UP100J 4

Figure 2. Qstarz BT-Q1000XT GPS data logger 6

Figure 3. IOSiX OBD-II data logger 7

Figure 4. CARWINGS online data 8

Figure 5. Transformer installation 10

Figure 6. Distribution panel installation 11

Figure 7. Completed Phase 1 installation 12

Figure 8. GRIDbot screen to start a trip 13

Figure 9. GRIDbot screen to end a trip 14

Figure 10. First Nissan LEAFs arrive at the City of Houston 15

Figure 11. Photograph of the cars in Row F 19

Figure 12. Photograph of the cars in Row G 20

Figure 13. Screenshot of On-line Management Reporting Tool 21

Figure 14. Photograph of City of Houston Mayor Parker announcing the fleet charging site 26

Abstract/Executive Summary

GRIDbot's electric vehicle service equipment (EVSE) technology was fully developed and poised for demonstration. This smart technology was designed specifically for fleets, multi-family, and public charging sites. The ability for the charging infrastructure to provide necessary data to a fleet manager in real-time, regarding fleet use and charging on an individual vehicle basis had not been demonstrated in any other fleet in the US. Secondary challenges included EV charging availability, cost, and driver acceptance. Finally, with specific interest to TCEQ and the City of Houston, the emissions modeling and analysis was planned to provide insight regarding this emerging technology.

Houston was selected for this project because of their activity and commitment to the adoption of electric vehicles as a technology to decrease mobile air emissions and reduce the demand on foreign oil. The EV is fundamentally defined as having zero tailpipe emissions since it uses only electricity stored on the vehicle's battery system. This characteristic is important to Houston's air quality since tailpipe emissions are the primary factor included in transportation emissions inventories, modeling, and air quality decisions. Emissions are released with the production and distribution of electricity, but are accounted for separately in air quality modeling/decisions, just as the refinery emissions are reported and analyzed separate from vehicles emissions. PHEVs (and HEVs) have a gasoline or diesel engine as the second power source. These engines produce tailpipe emissions that are included in mobile source emissions characterization and comparisons.

Since 2004, the City of Houston has been replacing much of its light duty fleet with higher efficiency hybrid electric vehicles, and in 2009 began a process to use EVs and PHEVs as a major new component of its fleet. As part of this process, the City retrofitted 15 Toyota Prius with Hymotion battery systems to extend the electric vehicle part of driving. The City also participates in the Rocky Mount Institute's Project Get Ready; was chosen as the one Texas city where the Nissan LEAF was first introduced; and is a target city in DOE's national initiative entitled The EV Project.

The planning and design of this electric vehicle service equipment (EVSE) installation included purchasing charging station equipment, setting up data collection and analysis methods, securing site engineering and site assessments, preparation for staff involvement and training, and the application for the required permit for the installation. The site installation was completed in two phases, to coincide with the delivery of the electric vehicles. The first site installation included 14 charging units, necessary transformer and breaker boxes, lighting and security cameras for the entire project. The second row of 14 charging units was completed after initial feedback and data were collected.

Modeling and analysis included data collection from charging infrastructure and the vehicles to measure energy use and emissions. Scenario and data analyses with various vehicle and grid emission factors and scenarios were used to identify emissions benefits of using EV infrastructure.

Key to this demonstration, additional information was collected from the staff, drivers, fleet management, maintenance, and security staff. This information helped in the development of staff training, driver materials, and management and maintenance practices. Planning and implementation of the project was an inclusive process, adapting with lessons learned in the process. General information collected also

identified drivers concerns regarding the acceptance of a centralized fleet concept, dedicated electric vehicles over conventional vehicles and the use of the charging stations.

This project has been accomplished with the cooperation of various City of Houston Staff, the principal investigators and contractors, all of whom have contributed their specific technical areas of expertise as well as their enthusiasm for being part of the first installation of this scope in the US.

Introduction/Background

The City of Houston (the City) developed a plan to reduce the number of fleet vehicles owned by the City and used by employees located in the downtown Houston area. Part of this plan is to increase the per vehicle use of a smaller fleet, and to replace the current gasoline vehicles with electric vehicles (EV) to reduce the tail-pipe emissions of the fleet. The City determined that the concept of a "pooled fleet" would enable them to monitor the vehicles more efficiently through an online reservation system and enable easy access for various departments, which will be fully deployed in 2012.

This demonstration pivoted on the installation of 28 charging stations in one centralized location to support the City's centralized fleet concept. This included providing and installing all the components of the charging infrastructure, operation and oversight of the installation, staff training and reporting to Fleet Management. The location is an underground parking garage in downtown Houston that encompasses 18 city blocks of parking space, is three levels deep and contains over 3,000 parking spaces. The City purchased all the vehicles that make up the fleet. The data collected from this demonstration has shed additional light on the EV market acceptance and GRIDbot commercialization potential.

A key interest in this demonstration was for the Houston Advanced Research Center (HARC) to study the impacts of the replacement of a variety of conventional fleet of internal combustion engine vehicles, with a dedicated electric fleet. This study includes both the cost-effectiveness and emissions impacts of this fleet turnover.

GRIDbot's first EVSE product – model UP100J was developed (Appendix A) to target this type of fleet installation. It has both a level-1 outlet which supports plug-in hybrid electric vehicle (PHEV) conversions and scooters and a level-2 outlet which provides faster charging for vehicles developed for the mass market, such as the Nissan LEAF or Chevy Volt. It also incorporates networking and reporting capabilities that will continue to enhance the fleet management of these vehicles beyond this demonstration. This product and a number of additional models are now ready for full commercialization.

Figure 1. GRIDbot's model UP100J

Here are just some of the features:

- Level-2 charging through a J1772 coupler (fully compliant with SAE, UL, and NEC)
- Level-1 charging through a NEMA 5-20 receptacle (fully compliant with SAE, UL, and NEC)
- Advanced graphical interface offering "Fleet", "Vending" or "Value" modes
- Data collection of each charging session along with local grid health data
- Unique instant-access authentication with bank level network security
- Time of day price-schemes that can be set remotely through network
- Networked demand response, cold ramp-up, and other load control features
- EV charging and data collection functions normally during network outage
- Personal protection system on each output (patent pending durable relay technology)
- Remotely upgradable interface and firmware
- Mounting options include Pad-Mount, In-Ground, Wall-Mount, and Pole-Mount
- (Model specifications – Appendix B)

Project Objectives/Technical Approach

The objective was to demonstrate the effectiveness and acceptance of GRIDbot's electric vehicle charging station technology in conjunction with a dedicated electric vehicle fleet.

GRIDbot, Good Company Associates (Good Company), and HARC agreed to partner with the City to provide charging infrastructure for 25 dedicated electric vehicles which the City planned to purchase in 2011, as well as other plug-in electric vehicles included in the City's fleet. The City's goal was to consolidate its fleet, as well as replacing standard combustion engine vehicles with electric vehicles. This project's infrastructure provides the electric charging for the City's centralized fleet of dedicated

electric and plug-in hybrid electric vehicles which is located in the City parking facility at Tranquility Park.

Electric vehicle charging infrastructure is essential to meet the needs of the City's growing PHEV/EV fleet. This infrastructure is a part of the City's commitment to reduce fleet vehicle emissions. PHEVs/EVs cannot be successfully deployed without cost effective and consumer friendly support technologies. By facilitating the development of the GRIDbot technology, its more rapid commercialization of this clean technology can be furthered.

Tasks

Good Company provided project management for the installation of the equipment and provided equipment user training to the City staff. Good Company also collected information from the staff to evaluate user acceptance of the centralized fleet, the dedicated electric vehicles, and charging equipment.

HARC collected information from the vehicles and the charging equipment throughout the demonstration. They have used various modeling and comparative methods to analyze this data regarding charging station performance, vehicle use, and vehicle emissions, and provide insight concerning the emissions impact based on this data using air quality modeling.

GRIDbot provided the necessary technical oversight for all production, performance, and installation of the charging stations for the various contractors involved in the project. In addition, GRIDbot cooperated with the City staff to modify the customer interface and network operation based on project findings. This demonstration will enable GRIDbot's first EVSE product, the model UP 100J, to move quickly to broad product commercialization.

Task 1

Planning and design

From the Grant Activities (Scope of Work):

> *2.1. Task Statement: The PERFORMING PARTY will complete all necessary work in preparation for the demonstration, including purchasing charging station equipment, setting up data collection and analysis methods, securing site engineering, site assessments, and all required permits for charging station locations, and training staff.*
>
> *2.1.1. The PERFORMING PARTY will work with the HARC and the City to develop a project database and data collection interfaces to collect data from the cars and charging stations for emissions modeling and assessment.*

The HARC database was designed to collect information from both the GRIDbot charging stations and the fleet vehicles. The system reported specific variables that were identified in designing the data system including basic vehicle identifiers, charging location, and charging characteristics. Electric vehicles do not communicate with charging systems on the battery system's state-of-charge (SOC). Consequently, a vehicle-based system is needed, such as the Nissan LEAF's CARWING reporting system, which allows vehicle owners to acquire vehicle trip and energy data. This project deployed GPS data loggers for the

two 2011 Nissan LEAFs (EVs) and two retrofitted Hymotion Prius (PHEVs). In addition, vehicle data loggers were placed in the two Prius to gather data on vehicle operation, trip characteristics, and energy use as recorded by the vehicle.

Basically HARC accesses the GRIDbot data via a SQL Server Linked Server connection, acquiring specified data and then formatting for analysis and presentation in Excel workbooks. The data collection system and network is part of the GRIDbot system installed in Houston. The primary data needs by HARC were event based charging activities for specific vehicles and charging stations, and fundamental measurements of electricity consumption that could be matched to the vehicles.

Data acquisition for the vehicles included multiple components or data collection devices; GPS data loggers, on-board diagnostic (OBD) port data loggers specifically for the Prius, and Nissan's CARWINGS data reporting for the LEAFs.

GPS vehicle data logger

Vehicle data acquisition equipment included Qstarz BT-Q1000XT GPS data loggers. These are stand-along, battery powered units that have an auto-shutdown feature, which saves battery life, and a vibration sensor, which restarts data-logging when there is sufficient vibration to detect possible vehicle use. The units were tested and found to have a battery life of at least one full week. Self-powered units were selected to avoid the need to directly wire units into the vehicle's power, and to minimize visibility to vehicle drivers if the unit were wired into the vehicle's auxiliary power outlet. Testing of placement of these units found that the driver's side door was optimal since it allowed the units to start up quickly when the vehicle was accessed (to begin searching for satellite signals as soon as possible).

Figure 2. Qstarz BT-Q1000XT GPS data logger

On board diagnostic (OBD) port vehicle data logger

Data loggers were also placed in the OBD ports of two Prius Hymotion vehicles. These were OBD-II data loggers from IOSiX. These units are plugged into the vehicle's OBD port located just under the steering wheel, out of sight of the driver, and are powered by the vehicle. They can be configured to

collect a wide range of variables that are reported to this port. A one gigabyte microSD cards is sufficient to store 10,000 hours of driving. They can be easily removed for download or swapped with a replacement card. The units have Bluetooth capabilities for wireless data access, but this feature was not needed in this project. The units were sufficient to collect data such as number of trips, time of trips, average speed, and fuel economy. The manufacturer had specifically developed the capability to measure the vehicle's battery system state-of-charge (SOC), including the Hymotion battery system. This potentially allows for measurement of the vehicle's real time use of fuel (gasoline) and electric power.

Figure 3. IOSiX OBD-II data logger

Vehicle data from Nissan CARWINGS

A LEAF owner can acquire data from Nissan's CARWINGS telematics system. It sends and receives data from the vehicle through technology similar to mobile phones. It provides in-vehicle capabilities, such as mapping and location features, but of primary interest in this project is data and statistics than can be acquired via the Internet. The vehicle owner has a user name and password to access this system. Data is reported on a daily basis for each trip (recorded as power-on and power-off events). Included are date of trip, distance, total energy used, total energy from regenerative braking, net energy used, miles per kilowatt-hour (kWh) of energy used, and carbon dioxide (CO_2) reductions. No detailed data are provided on time of trip (other than the date), average speed, or locational features. CARWINGS also creates various graphs of these data including cumulative trip/travel characteristics for monthly and annual reports. The daily travel data can be downloaded in a .csv format with these data reported on a monthly basis (each file is specific to the month specified).

Figure 4. CARWINGS online data

From the Grant Activities (Scope of Work):

> *2.1.2. The PERFORMING PARTY will work with HARC to develop a modeling and scenario analysis to be used to evaluate air emissions impacts of the use of a dedicated electric vehicle fleet. The modeling and scenario analysis will include use of EPA emissions standards and the GREET model.*

The Nissan LEAFs with zero tailpipe emissions are replacing older, high emitting vehicles with an average emission rate of 0.48 grams per mile. Fleet emissions modeling uses EPA's MOVES modeling system to estimate total vehicle emissions within the Houston-Galveston-Brazoria (HGB) region of 1.04 grams per mile for light duty vehicles. The different types of tailpipe emission comparisons that were used for the City's use of EVs in its light duty fleet include:

- emissions from vehicles being replaced,
- similar new conventional light duty vehicles,
- a US Department of Energy (DOE) vehicle emissions calculator, and
- MOBILE6 and MOVES emissions estimates.

From the Grant Activities (Scope of Work):

> *2.1.3. The PERFORMING PARTY will procure all necessary equipment and supplies for the project as detailed in the Approved Grant Budget, including the manufacturing of the GRIDbot charging stations.*

Good Company worked with the various contractors to coordinate the manufacturing, procurement, and delivery of the equipment and supplies for the project. In addition to the charging stations, the electrical equipment included distribution panels and a transformer. Once the site plan was determined additional contractors were identified for wheel stops, signage and security equipment.

From the Grant Activities (Scope of Work):

> *2.1.4. The PERFORMING PARTY will work with the City to complete a site engineering and assessment, including permitting, for the first of the two sites.*

The location for the project was selected by the project team in collaboration with the Fleet Management and Tranquility Garage Management. It was determined that the power capacity would support 28 dual port charging stations and would be centrally located for staff access and provide public visibility as well. Aqua Level Rows F and G of the Tranquility Garage were specifically selected due to access to electrical supply and consideration given to avoiding the lowest level of the garage in case of flooding, which has happened in extreme hurricane conditions.

Plans included detailed electrical support for the project installation and instructions for the charging stations. Plans were submitted to the City Permitting Department on April 19, 2011, for the entire project, but allowing for the installation to occur in two phases.

From the Grant Activities (Scope of Work):

> *2.1.5. The PERFORMING PARTY will work with the City to set up a fleet management system that its staff will use with the vehicles. PERFORMING PARTY will work with the City to set up the web interface and vehicle data collection for this system. Under contract with the PERFORMINGPARTY, Good Company will work with the City to develop policies and procedures for City staff who will be using the vehicles and recharging stations, and education materials for the staff regarding the charging and fleet management system.*

Plans were made for the centralized fleet management system, but the purchase was delayed. The Project Team worked with the Fleet Management staff to set up web-based reporting of data and to develop policies and procedures for the charging stations use, security, and maintenance. Materials were developed for the City to place in the glove box of the vehicles regarding the use of the charging stations (Appendix E) and a troubleshooting index was produced specifically for the City's security and maintenance staff (Appendix D).

From the Grant Activities (Scope of Work):

> 2.1.6. The PERFORMING PARTY will work with the City to ensure that the City procures 25 Nissan LEAF dedicated electric fleet vehicles for delivery within the required timeline.

The City selected the Nissan LEAF as their vehicle of choice for this fleet because it is a dedicated electric vehicle, meaning that there is no other alternative fuel. They also favored this vehicle from a cost basis and from a maintenance consideration. Due to delays in the initial delivery of LEAFs to the US, the City was only able to purchase two of the LEAFs for delivery in May 2011, with promise of more to trickle in over the summer months. The City agreed to assign five or six Prius plug-in hybrids to the

Tranquility Garage to provide us additional data comparisons while waiting for the additional LEAFs to be delivered.

Task 2

Site installation and data collection for first group of charging stations

From the Grant Activities (Scope of Work):

> *2.2. Task Statement: The PERFORMING PARTY will install the first group of charging stations and collect data on their use.*
>
> *2.2.1. The PERFORMING PARTY will install 14 UP100J charging units (which include one level- 1 (120) and one level-2 (240) outlet in each unit) at a City of Houston motor pool site.*

The first site installation and data collection phase included installation of 14 charging units, development of staff training, delivery of the first Nissan LEAF vehicles, distribution of user materials, initial collection of data and initial feedback from vehicle and charging station users.

GRIDbot and Good Company oversaw the contractors who completed the first phase of the installation at the Tranquility Garage. This included installation of a transformer, two breaker boxes or distribution panels, all necessary conduit and wiring, wheel stops, signage, and security cameras to support the electric charging stations at the site. Completion of this first installation and inspection by the city Electrical Permitting Department were completed on June 2, 2011.

Figure 5. Transformer installation

Figure 6. Distribution panel installation

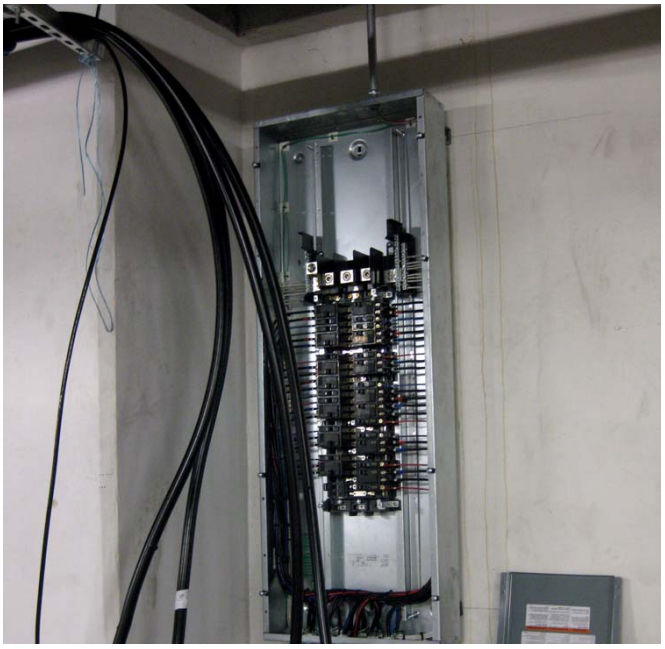

GRIDbot installed updated firmware and completed all beta testing of the charging stations prior to vehicle assignment to the centralized parking area; On-site testing and adjustments to the software were completed by GRIDbot in July 2011, prior to the delivery of the first two Nissan LEAFs. The first site installation and data collection of this EVSE demonstration was completed August 30, 2011.

Figure 7. Completed Phase 1 installation

From the Grant Activities (Scope of Work):

> *2.2.2. The PERFORMING PARTY will work with Good Company to develop and provide City of Houston staff training (including, but not limited to, both live presentations and written material) in an effort to promote and encourage adoption and use of the electric fleet vehicles.*

GRIDbot and Good Company worked together to develop simple training materials for the drivers and charging station users. The trickling in of vehicles will encourage individual training or small group discussions. The stations are largely self explanatory and the interface screen gives simple and direct instructions to the users as well. Additional promotional materials and feedback will be accessed as more vehicles become available.

Below are two GRIDbot interface screen samples including simple and direct instructions for users.

Figure 8. GRIDbot screen to start a trip

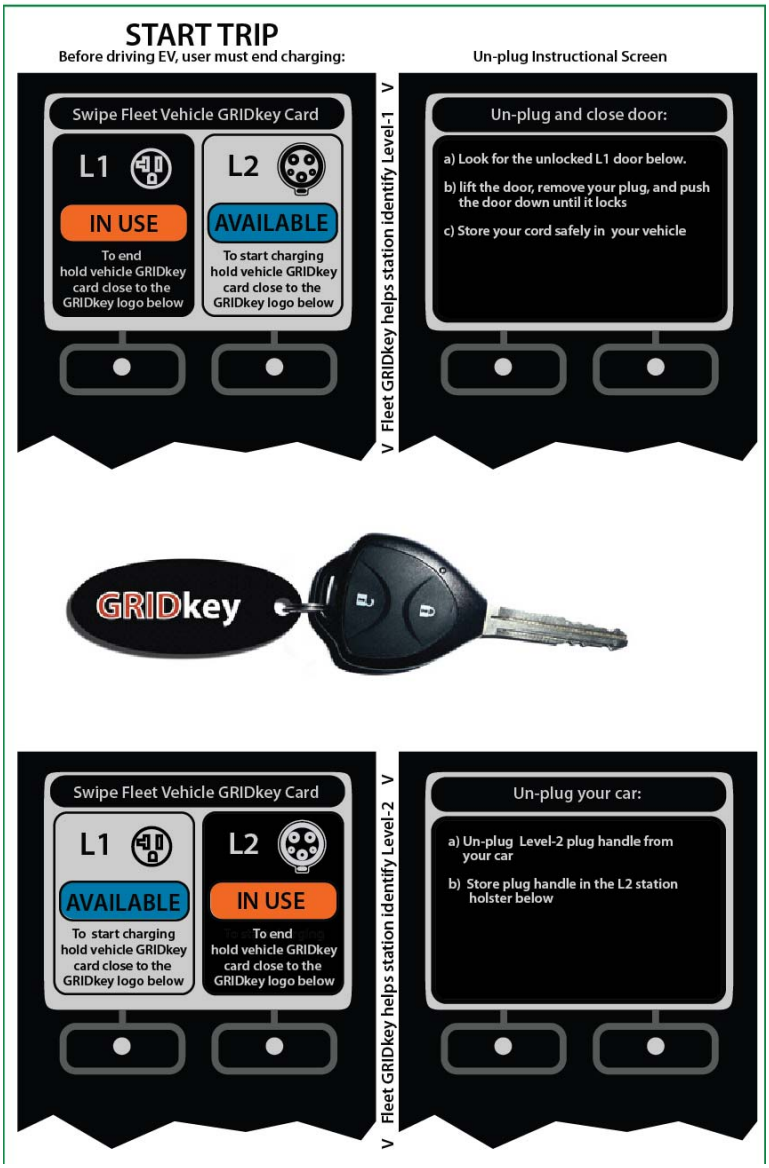

Figure 9. GRIDbot screen to end a trip

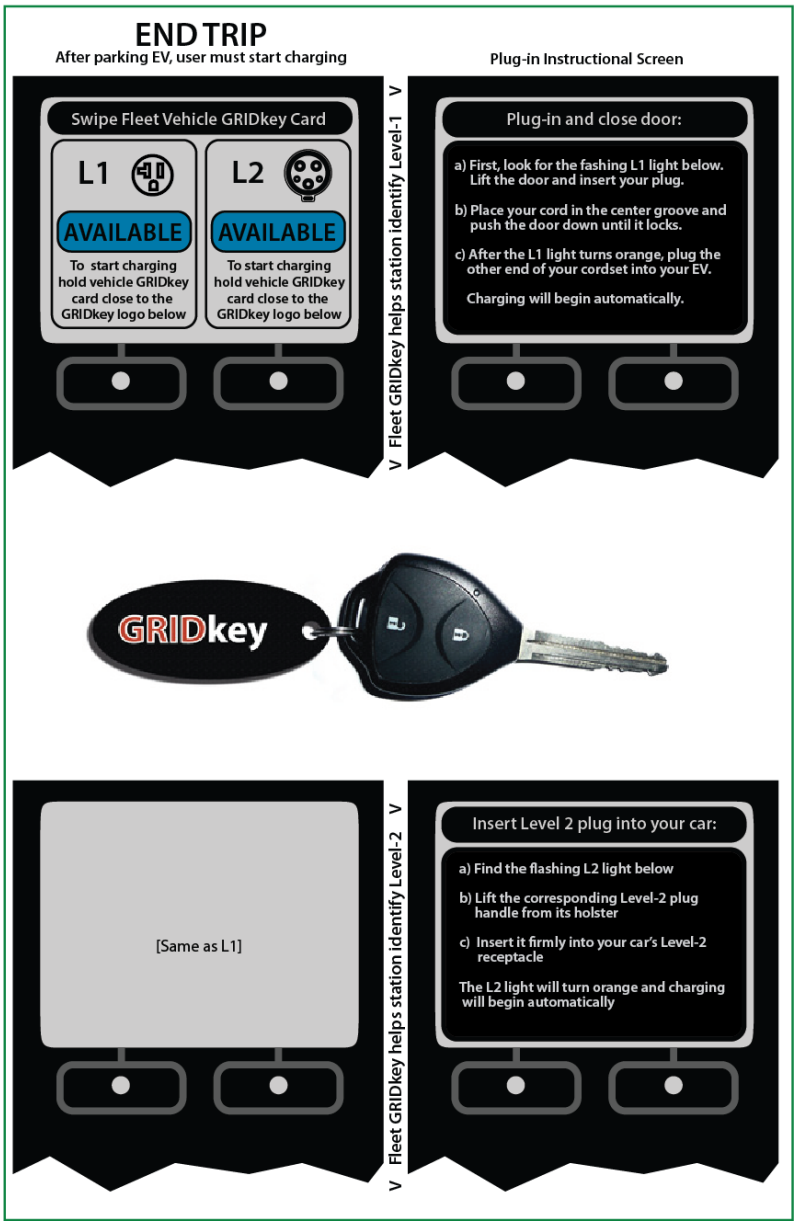

From the Grant Activities (Scope of Work):

> *2.2.3. The City will take delivery and put into service the first 9 Nissan Leaf electric fleet vehicles, encourage use of the charging units, and promote broader adoption and use of the centralized fleet vehicles.*

The first two LEAFs arrived in July 2011 after several delays due to Japan's earthquake and tsunami. This event delayed vehicle and part manufacturing and even the delivery of available vehicles to the US ports. In addition, the city took some additional time to work out a lease-purchase agreement with Nissan, to take advantage of the tax credit that is currently available.

Figure 10. First Nissan LEAFs arrive at the City of Houston

From the Grant Activities (Scope of Work):

> *2.2.4. The PERFORMING PARTY will work with HARC to conduct initial tests of the vehicle data collection equipment on the first vehicles delivered. Data collection from the GRIDbot charging stations and vehicles will be collected and compiled every two weeks during the demonstration.*

GRIDbot and HARC worked together with contractors to develop the software to provide HARC with the vehicle data collected from the stations in a format that would enable their use in modeling. There was some additional cost for this software "bridge" development, but they are now communicating in real-time. Readings are recorded at 30 minute intervals for all stations, to include the vehicle identification number, the time at the start of the charging session; time at the end of the charging session, and the kWh's consumed. The reporting interval can be set to collect data at shorter or longer intervals.

This station data is being incorporated with information from the vehicle data monitors in the Prius and with the information obtained from the CARWINGS reports on the LEAF's. Initial modeling to determine cost/mile and emissions savings are being collected and systems further refined.

From the Grant Activities (Scope of Work):

> *2.2.5. The PERFORMING PARTY will work with Good Company to collect feedback from vehicle and charging station users monthly during the demonstration. Feedback will include surveys, focus groups, educational forums, vehicle user data, and other forms of information that may become available.*

Direct communication with the users has largely gone through the City Fleet Manager due to the small exposure at this point in the project. GRIDbot has provided the radio frequency identification (RFID) access key-fobs and written instruction for the users, and the Fleet Manager was established as the point of contact for any EV related issues. Various users have been contacted by Good Company to obtain initial feedback on the LEAFs, how the car communicates information about charging to the user, to modify future guidance for users and support staff.

Task 3

Interim Evaluation of First Group of Charging Stations

From the Grant Activities (Scope of Work):

> *2.3. Task Statement: The PERFORMING PARTY will perform an interim evaluation of the first installation of charging stations and apply lessons learned to the second site installation.*
>
> *2.3.1. The PERFORMING PARTY will establish the costs incurred for the installation of the GRIDbot charging stations, and finalize installation diagrams for the stations.*

While installation costs will vary greatly from location to location, we have found the largest variable is the availability of necessary power on site. We were able to confirm the availability of adequate power for the 28 stations on site – which could have added as much as $50,000 to the project. However, access to that power required the installation of a transformer and two breaker-boxes or distribution panels, extensive coring through garage floors and miles of conduit from the source of power to the parking location. Additional coring through garage floors from the lower level at each charging station required x-ray evaluation to avoid rebar, electrical lines, or other materials imbedded in the concrete. We determined that we were able to install all 28 stations for approximately $3,000 per unit.

The initial installation of 14 stations allowed us to work with electricians and other vendors, to determine what information they needed to plan and complete the installations. Small additions to the installation plan and to the installation manual were made for the second row of 14 stations.

From the Grant Activities (Scope of Work):

> *2.3.2. The PERFORMING PARTY will make modifications to the charging station customer interface as necessary based on feedback from station users and project partners (the City, HARC, and Good Company). The PERFORMING PARTY may also communicate with vehicle manufacturers to insure charging station compatibility with other electric vehicles.*

With the arrival of the first all-electric vehicles the learning began. We had compiled all the information available from Nissan, but until we plugged them in we didn't know exactly how they would respond to the chargers or how the drivers would respond to the vehicles. During the month of September 2011 we were able to communicate with various users and study the data from the charging stations and the various charging sessions. Changes were made to the interface to simplify the driver's on-screen instructions.

Data was reported to HARC every thirty minutes, with a secure interface developed between GRIDbot and HARC to enable the download of this information automatically. Reporting formats and the

information provided to the Fleet Manager was further developed into an expandable format which allows either a quick glance at total usage numbers, or an expanded database identifying every charging session on every charging station. HARC continued visiting the installation site weekly to download vehicle data and report any system or vehicle issues.

The City considered purchasing a variety of vehicles, as the LEAFs continued to be unavailable. The GRIDbot charging stations are compatible with the Prius, LEAF, and Volt, and we see no reason it will perform differently with any other electric vehicle.

From the Grant Activities (Scope of Work):

> *2.3.3. The PERFORMING PARTY will identify the second location for charging infrastructure to support the City's centralized electric fleet.*

With much of the conduit and infrastructure installed with the first stations, and the modifications to the installation manual completed (Appendix C) , we confirmed the second row (Row G) of charging stations would be directly adjacent to the first row (Row F) of the Aqua Level of Tranquility Garage.

From the Grant Activities (Scope of Work):

> *2.3.4. The PERFORMING PARTY will work with Good Company to incorporate installation diagrams for the GRIDbot charging stations and guidelines and usage instructions into an installation manual and an operational manual. The manuals will include a troubleshooting process.*

GRIDbot provided copies of the installation manual and the UP 100J product operation manual for inclusion in an owner's manual for the City of Houston. Good Company collected all the installation diagrams, the permitting and inspection information, as well as vendor information for the cameras, wheel-stops, signs, transformer, breakers, installation and warrantee information. User's educational materials and an Owner's Quick Troubleshooting Guide which were developed for the staff training and were also included in an owner's manual. A copy of the Owner's Manual was provided to the City Fleet Manager and to the Tranquility Garage Operations Manager.

From the Grant Activities (Scope of Work):

> *2.3.5. The PERFORMING PARTY in conjunction with HARC will perform air modeling runs using the interim data collected to assess the initial impact on emissions.*

HARC compiled data on charging, from GRIDbot stations, OBD data loggers, and CARWINGS online reports, to create a summary report on charging activity by station and by vehicle. They have also acquired HGB emissions factors for MOBILE6 and MOVES, and the most recent eGRID data for emissions estimates.

Although electric vehicles eliminate tailpipe emissions, there are emissions from the production of electricity that charge the vehicle's battery system. Several models were analyzed to determine NO_x emissions associated with electricity production. The most recent eGRID values for the Texas electric power grid are for 2007. These were analyzed for emission factors for the entire Texas grid, nearby

power plants, current (2010) emissions, projected emissions for future years, and emissions that reflect renewable power purchases in Houston.

For September and October 2011, the Prius Hymotion vehicles had average charging events of 19.6 hours during the primary phase of charging (Phase 1). Vehicles continue to draw a small amount of power for battery cooling (0.23 kWh Phase 2). The vehicles averaged 2.54 kWh for the 52 charging events. Total electricity use amounted to 121.81 kWh.

During this same period, the LEAFs had average charging events of 1.9 hours. The vehicles averaged 4.69 kWh for the 53 charging events. Total electricity use for charging these vehicles amounted to 220.42 kWh. Currently the cost of electricity at this location is about 9.5 cents/kWh.

For the LEAFs, 72% are plugged in at noon or later, and 34% start at 3 pm or later. For the Prius PHEVs, 75% are plugged in at noon or later and 26% are plugged in at 3 pm or later. This early information indicates that more than half of the current charging could be moved into the overnight hours, to avoid peak day use.

Task 4

Site Installation and Data Collection for Second Group of Charging Stations

From the Grant Activities (Scope of Work):

> *2.4. Task Statement: The PERFORMING PARTY will install the second group of charging stations and collect data on their use.*
>
> *2.4.1. The PERFORMING PARTY will work with the City to complete a site engineering and assessment, including permitting, for the second site.*

Installation of the additional 14 charging stations was delayed until the fall, so that we could have them in place in time for the delivery of the fleet of cars, but not too far in advance. The initial contractor used for the first installation was not available, so a second contractor was identified to complete this work. Engineering, planning and permitting were reviewed and updated with this contractor and the installation was completed in September 2011, in the adjacent row of the garage, Row G.

From the Grant Activities (Scope of Work):

> *2.4.2. The PERFORMING PARTY will install 14 UP100J charging units at a second City of Houston motor pool site.*

The entire installation passed the electrical inspection on September 29, 2011. GRIDbot tested communications mechanisms and ran performance tests on all 28 of the charging stations units and confirmed that they were ready for use. The project team reviewed the reporting templates with City Fleet Management Staff in anticipation of the delivery of the vehicles.

From the Grant Activities (Scope of Work):

> *2.4.3. The City of Houston will take delivery of and place into service the remaining Nissan Leaf fleet vehicles for staff use and actively encourage use of these vehicles by all eligible staff.*

The actual delivery of the additional LEAF vehicles was delayed several times due to negotiated leases, insurance, and staff turnover at the City. Subsequently we have twice amended our timelines to delay the final completion of this project, recognizing the two LEAFs and five Prius provided a small study sample. HARC continued to review and report data and communications and support continued to be provided to the staff. Cars actually began to arrive at the site on March 23, 2012. Within a three week period all 23 additional vehicles were delivered, but then faced some additional delays to be fully assigned and put into service by the City. Documentation of matching funds was provided to TCEQ. The fleet using GRIDbot is now a total of 25 LEAFs and 5 Prius plug-in electric hybrids.

Figure 11. Photograph of the cars in Row F

Figure 12. Photograph of the cars in Row G

It was expected that the entire fleet could include a pool for as many as 500 employees, but with the insurance requirements, the use is currently limited to 7 assigned drivers per car. This not only will limit the use of the cars but also the number of employees that will have the opportunity to drive them. It also limits, somewhat, the effectiveness of the online fleet management and reservation software. Since this fleet management software was not purchased until April 2012, it has not been put into use with these vehicles. We have continued to use the key-fob RFID cards for access to vehicle charging.

Figure 13. Screenshot of On-line Management Reporting Tool

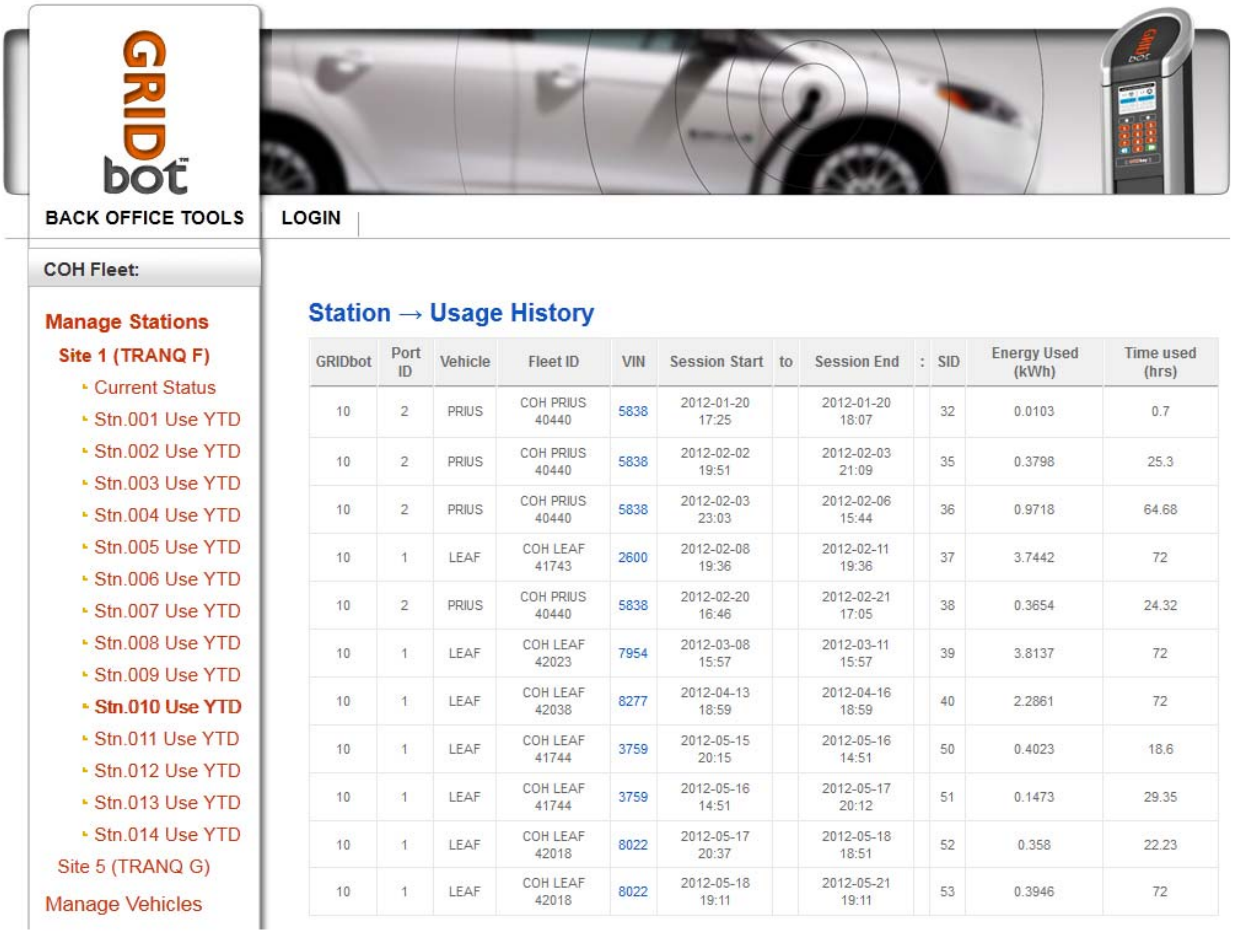

GRIDbot	Port ID	Vehicle	Fleet ID	VIN	Session Start	to	Session End	:	SID	Energy Used (kWh)	Time used (hrs)
10	2	PRIUS	COH PRIUS 40440	5838	2012-01-20 17:25		2012-01-20 18:07		32	0.0103	0.7
10	2	PRIUS	COH PRIUS 40440	5838	2012-02-02 19:51		2012-02-03 21:09		35	0.3798	25.3
10	2	PRIUS	COH PRIUS 40440	5838	2012-02-03 23:03		2012-02-06 15:44		36	0.9718	64.68
10	1	LEAF	COH LEAF 41743	2600	2012-02-08 19:36		2012-02-11 19:36		37	3.7442	72
10	2	PRIUS	COH PRIUS 40440	5838	2012-02-20 16:46		2012-02-21 17:05		38	0.3654	24.32
10	1	LEAF	COH LEAF 42023	7954	2012-03-08 15:57		2012-03-11 15:57		39	3.8137	72
10	1	LEAF	COH LEAF 42038	8277	2012-04-13 18:59		2012-04-16 18:59		40	2.2861	72
10	1	LEAF	COH LEAF 41744	3759	2012-05-15 20:15		2012-05-16 14:51		50	0.4023	18.6
10	1	LEAF	COH LEAF 41744	3759	2012-05-16 14:51		2012-05-17 20:12		51	0.1473	29.35
10	1	LEAF	COH LEAF 42018	8022	2012-05-17 20:37		2012-05-18 18:51		52	0.358	22.23
10	1	LEAF	COH LEAF 42018	8022	2012-05-18 19:11		2012-05-21 19:11		53	0.3946	72

From the Grant Activities (Scope of Work):

> *2.4.4. The PERFORMING PARTY will work with HARC to collect and compile data from the GRIDbot charging stations every two weeks during the demonstration.*

HARC compiled data on charging from GRIDbot stations, OBD data loggers, and CARWINGS online reports, to create a summary report on charging activity by station and by vehicle. They have also acquired HGB emissions factors for MOBILE6 and MOVES, and the most recent eGRID data for emissions estimates.

HARC had installed four GPS units (2 in LEAFs and 2 in Prius) plus 2 OBD data loggers in the 2 Prius. HARC has added five more in new LEAFs for a total of 7 GPS units in LEAFs. We are no longer collecting this data from the Prius at this point, but continue to report all charging activity.

These loggers add to the available information collected from the cars and the charging stations, regarding miles driven and number of trips taken between charges. We gradually began seeing additional use of these cars, however the assignment of the vehicles and their use has been slowly implemented by the

City. The Fleet Department has provided HARC with the list of vehicles being replaced with these electric cars, so that the appropriate comparisons can be made in our analysis.

HARC has continued site visits to the garage weekly to download vehicle data, and has provided analysis of the interim findings each month. In spite of the limited data, due to the limited use, the information has been useful in developing reports and user information to both GRIDbot and to the Fleet Management Department.

From the Grant Activities (Scope of Work):

> *2.4.5. The PERFORMING PARTY will work with Good Company to collect feedback from vehicle and charging station users monthly during the demonstration. Feedback will include surveys, focus groups, educational forums, vehicle user data, and other forms of information that may become available.*

Good Company has been in regular contact with City Staff of the various departments, although the users have been too few to successfully provide either surveys or focus groups. Security and Maintenance Staff have all received training and are contacting GRIDbot if and when there are issues with the charging stations, indicated by the red light, or reported by users. Fleet Department Staff have been provided the user information and they have been providing the user training in small groups, as the new drivers are assigned to the vehicles, often by department as the old vehicles are traded in. Information received from the drivers or users of the first two LEAFs has helped us in crafting the information for the Fleet Department to provide for future drivers as they are assigned.

In addition to the assigned drivers, the Parking Management office has begun receiving requests from some of their parking contract clients, to find out whether they could access these charging stations either during the day or in the evenings when visiting the Theatre District in Houston. While no public access is provided to the charging stations during this demonstration, it is evident that the technology at this location is getting public attention.

Task 5

Data Collection and Analysis

From the Grant Activities (Scope of Work):

> *2.5. Task Statement: The PERFORMING PARTY will collect data from the GRIDbot charging stations and analyze it.*
>
> *2.5.1. The PERFORMING PARTY will monitor and collect data on the usage and performance of the GRIDbot charging stations and City electric vehicle fleet (including the dedicated electric Nissan LEAFs and other electric hybrid vehicles) for the duration of the demonstration.*

From September 2011 through May 2012, HARC collected data from the GRIDbot server, which reports vehicle charging activities. The system reported specific variables that were identified in designing the data system including basic vehicle identifiers, charging location, and charging characteristics. Electric vehicles do not communicate with charging systems on the battery system's SOC. Consequently, a vehicle-based system is needed, such as the Nissan LEAF's CARWING reporting system, which allows

vehicle owners to acquire vehicle trip and energy data. This project deployed GPS data loggers for the two 2011 Nissan LEAFs (EVs) and two retrofitted Prius Hymotion (PHEVs). In addition, OBD vehicle data loggers were placed in the two Prius to gather data on vehicle operation, trip characteristics, and energy use as recorded by the vehicle.

From the Grant Activities (Scope of Work):

> *2.5.2. The PERFORMING PARTY will work with Good Company on a final assessment of the demonstration participant acceptance and market potential of the GRIDbot charging stations.*

The participation by this particular fleet has been slow to adoption, due to a number of factors. The centralization of the fleet without an online management and reservation system has caused individual departments to be hesitant to share a vehicle, or give up the one they have had readily available in the past. The slow delivery and assignment of cars, the staff turnover, and the limits of the insurance policy have worked to reduce the excitement of participating in this project. The usage continues to be low, but steadily increasing. We anticipate the vehicles will begin to be used much more often once the fleet management software is implemented. With that said, the folks who have begun to use the cars find them very easy to adapt to, the GRIDbot charging stations very easy to use, and we have had little negative feedback.

GRIDbot market potential report is attached (Appendix F).

From the Grant Activities (Scope of Work):

> *2.5.3. The PERFORMING PARTY will work with HARC to compile a final report that contains air modeling and analysis demonstrating the impact of electric vehicle charging infrastructure on air emissions.*

The key variables for this project related to emission considerations include average trip length, vehicle efficiency (miles/kWh), and total electricity use (kWh).

The relationship between trip length and vehicle energy efficiency was observed during the study, with longer trips appearing to be somewhat more efficient than shorter trips. Particularly with EVs, vehicle efficiency can vary widely from driver to driver (e.g. aggressive driving depletes batteries more quickly) and over different kinds of trips (e.g. stop-and-start traffic). Vehicle efficiency (miles/kWh) varied from rates as low as 2 mi/kWh to high rates of 6 mi/kWh.

Using various vehicle scenarios, the largest NO_x emission reductions identified are in comparison with the older, high emitting vehicles being replaced, and with the average for the region's light duty. Since tailpipe emissions are zero, the percent emission reduction is 100%. For air quality considerations, the emission factor reductions are 0.48 grams/mile for fleet vehicles being replaced, and 1.04 grams/mile for the 2006 HGB light duty fleet average. Projecting to 2018, today's LEAFs would reduce NO_x emissions by 0.28 grams/mile.

Estimates of emission factors from the Texas electric power grid range widely by a factor of ten, from as little as 0.10 grams/mile to as high as 0.099 grams/mile. The former is lower than any of today's non-EV vehicles and the latter is higher than emission standards for conventional gasoline vehicles. These

estimates are not comparable to tailpipe emissions since they do not account for the full life cycle emissions of both electricity and gasoline/diesel fuels. Fuel related emissions, whether from electricity or gasoline/diesel production, are accounted for separately in air quality modeling, primarily as point source emissions.

General findings include:

- EV offsets NO_x tailpipe emissions equivalent to 7 new and 12 older gasoline vehicles, ignoring power plant emissions.
- Fuel costs are roughly one-tenth of comparison vehicles or 25 mpg at $3.75/gallon of gasoline.
- Fuel costs equivalent to 35¢/gallon of gasoline or 70¢/gallon for a 50 mpg vehicle.

HARC's technical report on air modeling and analysis is attached (Appendix G).

Task 6

Reporting and Program Requirements

From the Grant Activities (Scope of Work):

> *2.6. Task statement: The PERFORMING PARTY will prepare and submit monthly detailed project reports and a comprehensive final report while ensuring compliance with all TCEQ program requirements*
>
> *2.6.1. The PERFORMING PARTY will coordinate all project resources to ensure compliance with NTRD program requirements while providing deliverables on-schedule and on-budget.*

There were two amendments to the project timeline that were approved by TCEQ. All activities, deliverables have been in compliance with NTRD program requirements, on-schedule and on-budget.

From the Grant Activities (Scope of Work):

> *2.6.2. The PERFORMING PARTY will generate monthly progress reports and a final report summarizing all aspects of the project based on data from the task completion reports.*

Monthly progress reports and invoicing have been provided to TCEQ, as well as Task Deliverable Reports for Tasks 1-4. Tasks 5 and 6 are completed with the delivery of this final report.

Discussion/Observations

Objectives vs. Results

While this project met the objectives of the demonstration, there were some unexpected setbacks or lessons learned. Without a doubt the largest setback in this project was the repeated delay in getting the vehicles deployed at the site. Below are some of other external impacts on the project:

- OBD port data loggers failed to collect energy use and battery state-of-charge data. Secondary research on Prius Hymotion vehicles was used instead.
- Number of vehicles deployed and relatively limited use shifted emissions analysis to greater reliance on emissions factors. For this same reason, user education and staff training was re-designed to provide individual information and feedback.
- The CARWINGS data requires the driver to manually "opt-in" or accept the data connection on each trip, through the touch screen. Once we determined this to be the case, we made this part of our educational emphasis. Drivers expressed concern about what information was being collected and who would be seeing it. Once they were assured that driving practices and individual tracking would not be included it reduced their concern and we got higher participation.
- The City lease-purchase arrangement allowed the City to take advantage of federal tax incentives – reducing the capital cost of the vehicles. However this reduced the flexibility of the centralized fleet by limiting certain drivers to certain cars. This limit will be lifted when the City takes ownership of the vehicles in 2014-15.
- There are no federally adopted signs for Electric Vehicle Charging. We used the signage that has been suggested, but we found that there are many different designs and colors being used which may cause some confusion to consumers.

Critical issues

Site selection for a fleet is likely the most important issue, both in the cost of an EV Centralized Fleet and the user adoption. Early interaction with the local utility representatives is recommended. For a successful market transformation, we found that making this as cost-effective, convenient, and simple for the staff was very important.

Technical and commercial viability of the proposed approach

The manufacturer has identified several small changes to their production line that have been identified through this demonstration project. The benefit of this demonstration to the commercial viability of this product cannot be underestimated. This project has enabled GRIDbot to field test a large number of charging stations in one location, which would have been unlikely otherwise. The cooperation of the various Principals has been very helpful. GRIDbot is now offering three variations of the product in limited supplies on the commercial market, while developing a distribution framework for the USA and Canada.

Scope for future work

There is an opportunity to continue to evaluate this installation for user adoption, as the Fleet Management Tool is implemented and the older petroleum vehicles are removed from circulation. The impact of this Central Fleet concept along with the dedicated electric vehicles is unique and will set the stage for a number of cities with similar interests as Houston.

Intellectual Properties/Publications/Presentations

EV Press Release and Public Event

The City announced that they would soon have the largest fleet of electric cars and the largest electric fleet charging site in the country at a press event on September 8, 2011. "The City of Houston is proud of its vision and ongoing leadership in electric vehicle and plug-in hybrid technology," said Mayor Annise Parker. "This innovative technology is part of our alternative transportation future, helping the City save money by reducing gasoline costs while also reducing in-city tailpipe emissions. Due to the significant support from the City's partners, Houstonians can feel confident about charging their cars anywhere."

Demonstration models were set up for press or public to see at the event, along with City electric vehicles and other EVSE technologies being evaluated. The City also offered a driving tour of newly installed charging stations at Tranquility Garage, along with other EV initiatives.
http://www.greenhoustontx.gov/ev/

Figure 14. Photograph of City of Houston Mayor Parker announcing the fleet charging site

Summary/Conclusions

This demonstration project successfully demonstrated the GRIDbot technology and provided the necessary platform for the City to gain valuable experience in the implementation of this project. Below are some of the specific findings of this project:

Data Collection

- Data collection from the GRIDbot EV charging system is straight forward and manageable because data are available in a consistent manner with standard electricity measures. Frequency of reporting of variables and system timestamps are useful in making charging modifications, such as time of day of charging and possible estimates of the battery state of charge.
- The availability of vehicle-based data is challenging for fleet managers at this point because there are no standard protocols for accessing these data in the same way as conventional vehicles. For example, real-time and aggregate fuel use can be readily obtained from conventional fleet vehicles, but vehicle-based battery state-of-charge and energy use are not yet available to the owner/manager for fleet management purposes.
- Emission reductions from EVs and PHEVs can be maximized by matching vehicle charging data with user needs, for example, assuring there is an adequate battery charge to meet user needs with the reservation system and using reported data to maximize late night charging.
- Fleet management data can take advantage of the charging station's data to assign vehicles that best meet user needs; for example, drivers who will be making long or out-of-town trips can be assigned a vehicle with an adequate range of travel).

User Adoption

- Drivers seemed hesitant to use EVs for longer trips, the result of which limits EV use, restricts fuel cost savings that would otherwise be realized, and doesn't fully take advantage of the vehicle's capital investment and potential maintenance cost savings. On-going driver education and training during the transition to these new technology vehicles will be needed to provide adequate familiarity. In addition, drivers can be trained to use other new on-board vehicle technologies such as mapping and telecommunications to use vehicles more efficiently.
- The types of trips observed during the project indicated that EVs and PHEVs easily met trip requirements in terms of range and performance. However, further experience is needed since there was limited vehicle availability (e.g. few vehicles due to delivery delays) and limited use during the project period (e.g. insurance restrictions and hesitancy to fully utilize vehicle capabilities).
- The City has had issues with the 12-volt battery going dead after the cars sat unused for a couple weeks. The manual recommends charging the small battery at least every 3 months; as we figured out, the DC-DC converter will charge the 12V battery every 5 days for 5 minutes. If the car is not driven, the only drain will be self-discharging and telematics (which stop transmitting after 2 weeks without driving). The manual recommends leaving the vehicle unplugged when not in use, which supports the GRIDbot setting to disconnect the charging after 72 hours. The reason to stop charging is because every time the on-board charger comes on to top-off the Li-ion battery, the charging timer for the 12V battery gets reset for another 5 days, therefore, it never receives any charge.

GRIDbot Technology

- GRIDbot offers a comprehensive networked EV infrastructure solution. In combination, this charging station hardware and smart energy management services deliver the best user experience with clear user messaging and multiple management or pricing options that support various business plans.

- The various models of GRIDbot charging stations are designed specifically for public and fleet use. They are sturdy, vandal resistant, weather proof, corrosion resistant pedestals designed be deployed in the harshest of environments. Additional models may be developed to support the home charging market and to provide the smart energy management that is not currently included in much of the existing market.
- Once installed each GRIDbot UP model station becomes part of the secure GRIDbot energy management network giving the owner remote control over a wide array of data collection, price setting (in vending mode), and diagnostic capabilities.
- GRIDbot's unit pricing is below that of the competitors who offer networked management. Installation pricing is always site specific.

Acknowledgements

In addition to the matching funds that have been provided, the City has provided this project with assistance and cooperation of their staff in the following departments:

- Mayor Anise Parker's Office,
- Office of Sustainability,
- Finance Department,
- Fleet Management Department,
- Convention Facilities Department, and
- Electrical Permitting Division.

Appendices

Appendix A: GRIDbot UP100J – Station Anatomy

See figure on following page

Appendix B: GRIDbot UP100J Specifications Sheet

See figure on following page

Appendix C: GRIDbot Installation Manual

See figure on following page

Appendix D: City of Houston EV Charging Troubleshooting Guide

See figure on following page

Appendix E: City of Houston Driver Charging Instructions

See figure on following page

Appendix F: GRIDbot Market Potential Report

See figure on following page

Appendix G: Houston Advanced Research Center Technical Report - Emissions Analysis of the GRIDbot Electric Vehicle Charging Demonstration

See figure on following page

GRIDbot UP100J Anatomy

Head

Contains the brains of the station providing station control, communications, and energy management

Choice buttons

2 simple buttons that allows the EV driver to choose available services

GRIDkey pad

An RFID reader that identifies EV drivers by placing their GRIDkey card on the pad

L-1 charging receptacle

A standard NEMA R5-20 into which level-1 type charging cords may be inserted

Security bolts (back of station)

Custom bolts designed to protect the station from non-qualified personal. These bolts can only be opened by a special GRIDbot service tool

L-2 charging coupler

A standard connector that plugs into all Level-2 (SAE J1772) compliant EVs

L-2 port status light

Indicates the status of a specific Level-2 charging port

L-2 strain relief loop

Adds additional protection to the L-2 charging cable

Charging post housing

Supports and protects the station components and wiring from weather and vandalism

Screen

Provides real-time instructions and feedback to EV drivers about services available, payment options, and any errors

Number pad

A simple numerical button pad allows EV drivers to inter authentication information if required

L-1 charging door

Locks while station is not in use and also locks the EV drivers cord while in a charging session

L-1 port status light

Indicates the status of a specific Level-1 charging port

L-2 coupler holder

A place to store the L-2 coupler while not in use

L-2 cable strain relief

Protects the L-2 charging cable as it enters the station

L-2 charging cable

Provides communication and energy transfer from the station to the EV

Station label (back of station)

Contains serial number, electrical ratings, warnings, and factory information

Charging post mounting

GRIDbot™

UP100J
Networked EV Charging Station

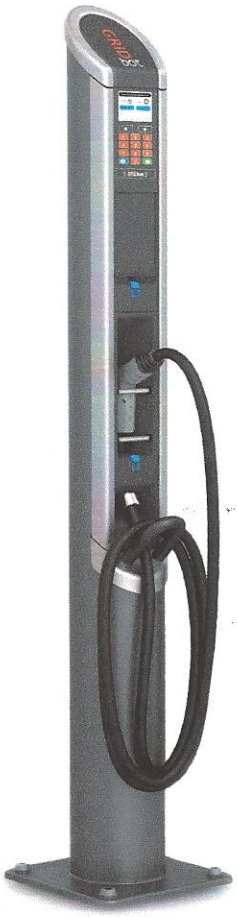

Made in the USA

620 Congress Ave
Suite 320
Austin, TX 78701
www.gridbot.net
+1 (512) 810 2322

UP100J Networked EV Charging Station Specifications:

Electrical:
Each UP100J EV station offers one Level-2 standard coupler, and one Level-1 charging receptacle, therefore requiring one (1) dedicated 208-240VAC circuit, one (1) dedicated 110VAC circuit and a shared earth/ground wire for a total of 5 wires running to the station.
Level-1 input/output voltage: 110 to 120VAC
Level-1 input service breaker: Dedicated 20 Amp single pole breaker (non-GFCI)
Level-1 max output current: 16 A
Level-1 output connector: NEMA 5-20 receptacle
Level-2 input/output voltage: 208 to 240VAC
Level-2 input service breaker: Dedicated 40 Amp double pole breaker (non-GFCI)
Level-2 max output current: 30 A
Level-2 output connector: SAE J1772TM connector with up to 25ft cable
Standby power consumed: < 10Watts continuous
Total max. output power from station: 7.2 kW

Networking:
LAN: Physically and digitally secure hard wired Cat 5 between master and slave stations
WAN: Cellular data network options are available for the master station.

Safety and operational:
Safety: ETL listed to UL2231-1, UL2231-2, and UL991. Meets NEC Article 625 and SAE J1772
Operating temperature: -30°F to +130°F (-35°C to +55°C)
Operating humidity: Up to 95% non-condensing
Enclosure rating: NEMA 3R
Terminal block temperature rating: 212°F (100°C)

Interface devices:
Screen: Heated full color transflective LCD display, with auto brightness adjust for ambient light
RFID reader: Active multi-standard
Touch pad: Backlight numeric membrane type buttons
LED status indicators: RGB led with auto brightness adjust for ambient light

Safety devices:
Ground fault detection: 20mA Charge Circuit Interrupt Device (CCID20) including 3 auto retry (15 minute delay between each auto retry)

Detection devices:
Level-2 plug-out detection: Power cutoff per SAE J1772TM
Power metering: Utililty grade meter in each charging port
Local grid health: Service line voltage and frequency detection and logging
Ambient light sensor: Automatically adjusts brightness of screen and indicator LEDs
Ambient temperature sensor: Controls heating of LCD display in extreme cold

Physical Strength:
Housing wall: 1/4" thick aluminum 6061 T6 (No additional protective bollards necessary)
Base for pad mount housing (UP_PMP) unit: 12"x12"x1/2" thick aluminum 6061 T6
End caps: Solid aluminum T6
Interface parts: Latest UV resistant polycarbonate technology
Hardware: All internal and external hardware is stainless steel
Vandal protection: Custom external security fasteners (stainless steel)

Available Housing Post Dimensions:
Pad Mount Post (UP_PMP): 7" cylinder with a height of 70" and base of 12"x12"x1/2" thick
Direct Burial Post (UP_DBP): 7" cylinder with a height of 102"
Wall/Pole Mount Post (UP_WMP): 7" cylinder with a height of 54"

UP80J Networked EV Charging Station

Installation Manual (Version 20110701 - Total of 12 pages including this cover)

The UP80J is an electric vehicle charging station designed for instalation into GRIDbot standard UP housings.

Made in the USA

620 Congress Ave
Suite 320
Austin, TX 78701
www.gridbot.net
+1 (512) 810 2322

IMPORTANT WARNINGS:

READ FIRST: Important Safety Information is contained throughout this document. Read this manual in its entirety before attempting any service or installation.

ELECTRIC SHOCK! - This charging station is fed by both a double pole 240VAC circuit breaker. The potential for lethal electrical shock exists whenever you access the interior of the station. Before opening the enclosure be sure that you disconnect the correct breaker that feeds power to the unit.

DAMAGE TO ELECTRONICS: A wayward screwdriver in the box could short out and damage the electronics modules. Before opening the enclosure be sure that you disconnect BOTH breakers that feed power to the unit.

INSTALLER QUALIFICATIONS: GRIDbot stations must be installed and serviced by a qualified electrician in full compliance with all local and regional laws and in accordance with the National Electric Code NAFPA 70. This manual and it's contents does not, in any way, relieve the installer of responsibility to follow local safety codes and standards.

DO NOT MODIFY: This GRIDbot station should not be modified in any way. This will void the warranty, compromise protection and could result in a possible shock or fire hazard.

NO INFORMATION GUARANTY: Significant effort has been made to create this manual and to keep the information in it current and applicable to the most common North American installation situations.

LIMITATION OF LIABILITY: GRIDbot cannot assume responsibility for installation, personal injury, property damage, incidental, contingent, or consequential damages of any kind resulting from inability to use this manual. GRIDbot cannot assume responsibility for acts of God, alterations, shipping handling or any other factors not under the control of GRIDbot LLC.

Electrical:
Each UP80J EV station offers 1 Level-2 standard coupler, therefore requiring 1 dedicated 208-240VAC circuit and an earth/ground wire for a total of 3 wires running to the station.

Input/output voltage: 208 to 240VAC
Input service breaker: Dedicated 40 Amp double pole breaker (non-GFCI)
Max output current: 30 A
Output connector: SAE J1772TM connector with up to 25ft cable
Standby power consumed: < 10Watts continuous
Total max. output power from station: 7.2 kW

Networking:
LAN: Physically and digitally secure hard wired Cat 5 between master and slave stations
WAN: Cellular data network options are available for the master station.

Safety and operational:
Safety: ETL listed to UL2231-1, UL2231-2, and UL991. Meets NEC Article 625 and SAE J1772
Operating temperature: -30°F to +130°F (-35°C to +55°C)
Operating humidity: Up to 95% non-condensing
Enclosure rating: NEMA 3R
Terminal block temperature rating: 212°F (100°C)

Interface devices:
Screen: Heated full color transflective LCD display, with auto brightness adjust for ambient light
RFID reader: Active multi-standard
Touch pad: Backlight numeric membrane type buttons
LED status indicators: RGB led with auto brightness adjust for ambient light

Safety devices:
Ground fault detection: 20mA Charge Circuit Interrupt Device (CCID20) including 3 auto retry (15 minute delay between each auto retry)

Detection devices:
Level-2 plug-out detection: Power cutoff per SAE J1772TM
Power metering: 2% accuracy collected at intervals that are configured at the server.
Local grid health: Service line voltage and frequency detection and logging.
Ambient light sensor: Automatically adjusts brightness of screen and indicator LEDs.
Ambient temperature sensor: Controls heating of LCD display in extreme cold.

Physical Strength:
Housing wall: 1/4" thick aluminum 6061 T6 (No additional protective bollards necessary)
Base for pad mount housing (UP_PMP) unit: 12"x12"x1/2" thick aluminum 6061 T6
End caps: Solid aluminum T6
Interface parts: Latest UV resistant polycarbonate technology
Hardware: All internal and external hardware is stainless steel
Vandal protection: Custom external security fasteners (stainless steel)

Available Housing Post Dimensions:
Pad Mount Post (UP_PMP): 7" cylinder with a height of 70" and base of 12"x12"x1/2" thick
Direct Burial Post (UP_DBP): 7" cylinder with a height of 102"
Wall/Pole Mount Post (UP_WMP): 7" cylinder with a height of 54"

Before You Start:

Box contents

3A

One (1) UP80J Station Head with attached charging cable and coupler

One (1) Pin in hex security bit

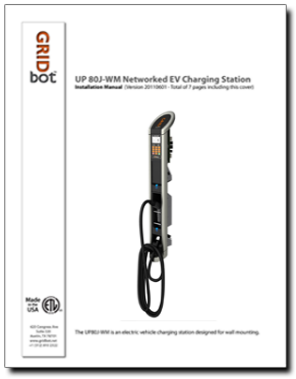

One (1) Instalation Manual

Other Items may be required for instalation:

4B

Station housing must be ordered seperatly:

Pad mount (UP-PMH)

Wall mount (UP-WMH)

Direct Burial (UP-DBH)

The following tools may be needed:

- Short driver handle (for standard bits)
- Right-angle driver ratchet (for standard bits)
- Set of SAE wrenches
- Hole cutting drill bits to match conduit size used
- Spirit Level

The following hardware may also be needed:

- Wall anchhors and fasteners
- Washers
- Concrete Anchors
- Security Nuts

Service Wiring Options:

240/120V SINGLE Split Phase (preferred service) 5A

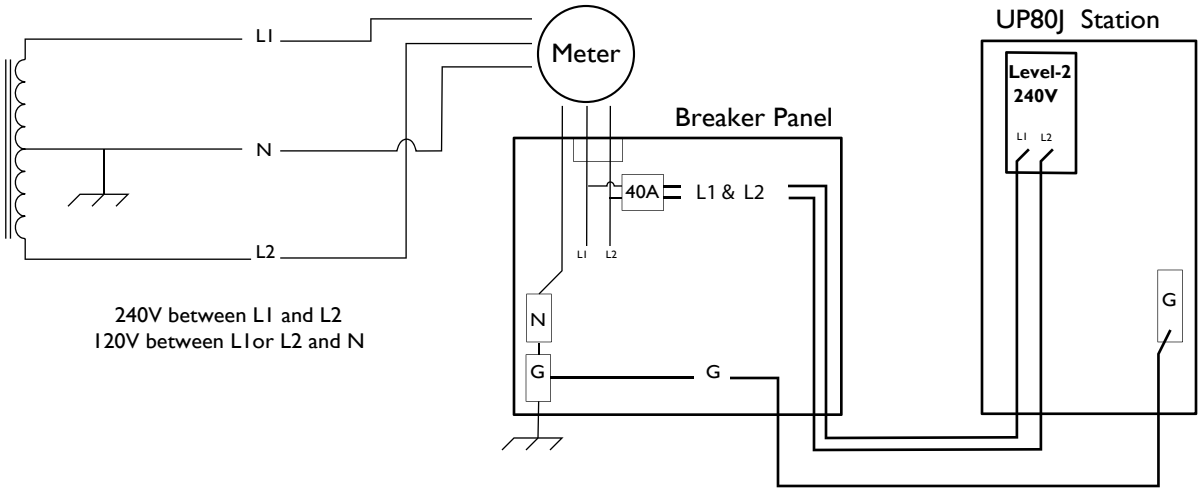

240V 3-Phase, DELTA-Connected, one leg center tapped (difficulty balancing multiple stations) 5B

Never connect the station to L3. The 3rd Leg of delta is 208Volts with respect to Neutral/Earth and will trip the GMI !

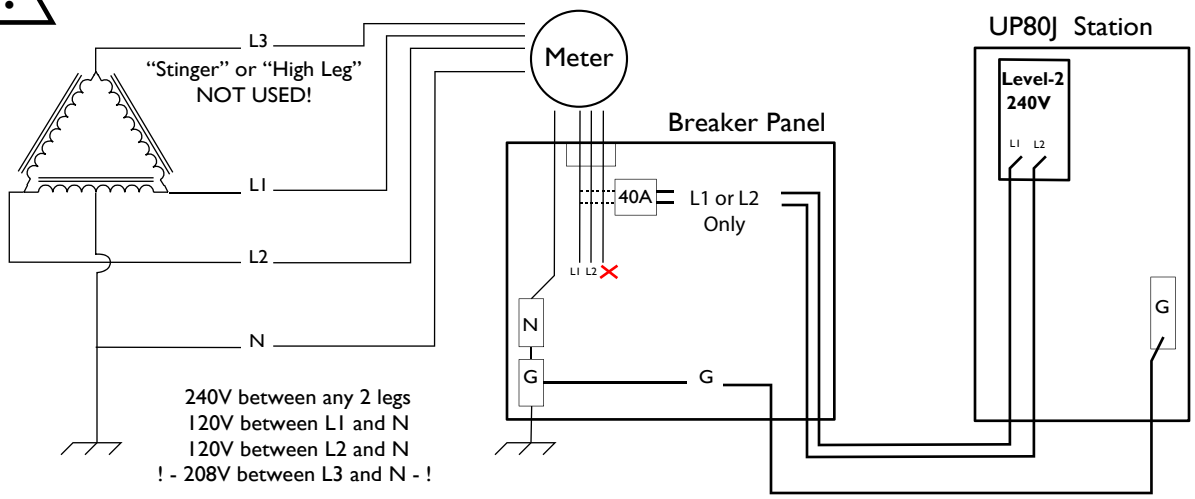

208V 3-Phase, WYE-Connected (attention to balancing required for multiple stations) 5C

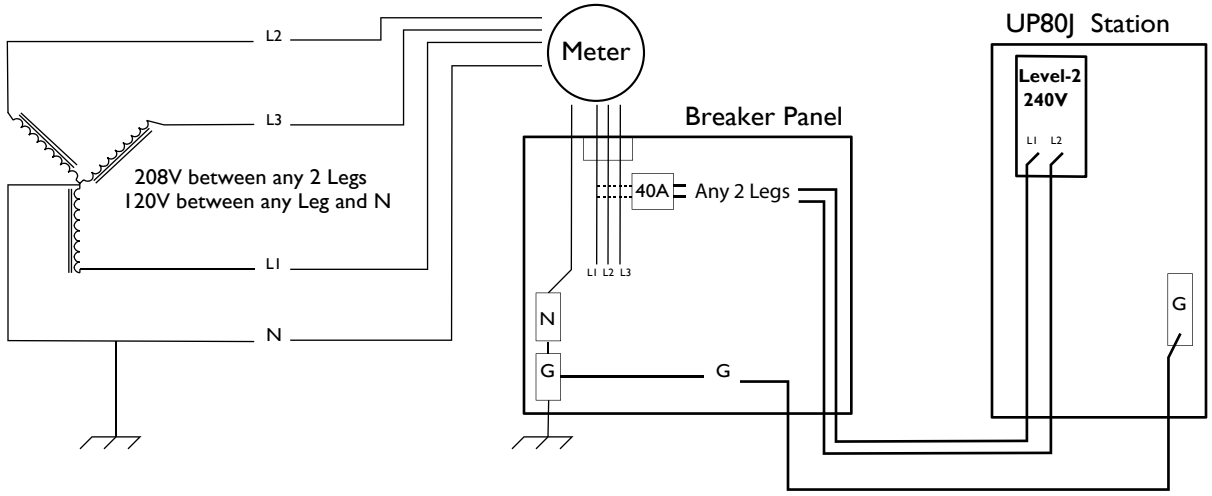

Install Pad Mount Housing: 6A

This option is recomended for multi-level parking structures where conduit may be run on the level below the charging stations. See GRIDbot best practices guide (UP-BPG) for more informaiton on site design and layout.

Before coring through concrete , local structural engineering practices must followed.

Use template (UP_PMT) provided with pad mount housing (UP_PMH) to core conduit hole through concrete to lover level. Use the same template to drill four (4) concrete anchor holes per housing. Install anchors so that studs protrude 1.5" from concrete surface.

To alow for future upgrades we recomend running electrical conduit large enough to contain four (4) current carrying conductors rated for 32Amp continuous @ 240VAC and one (1) earth ground conductor of similar size.

Always size conductors with consideration for voltage drop, and in accordance with NEC conduit fill, and temperature requirements.

Run the elecrical conduit so that it ends 18" above concrete surface. Some installations may require an additional conduit for a Cat 5 wire between stations in multiple station configurations (See Networking Options Guide (UP-NOG).

Attach wire protectors to the end of conduit before pulling conductors.

Lower housing over onto studs. Use a spirit level to make sure housing base is perfectly level. Use washers under housing to make adjustments housing base level as needed.

If the charging staion head is to be installed later, attach the optional "Ready-4-EV" cover (UP-COV) by sliding the bottom end of the cover into the housing slot provided, then rotate cover into closed position and fasten with the provided secirity bolt. Do not over tighten!

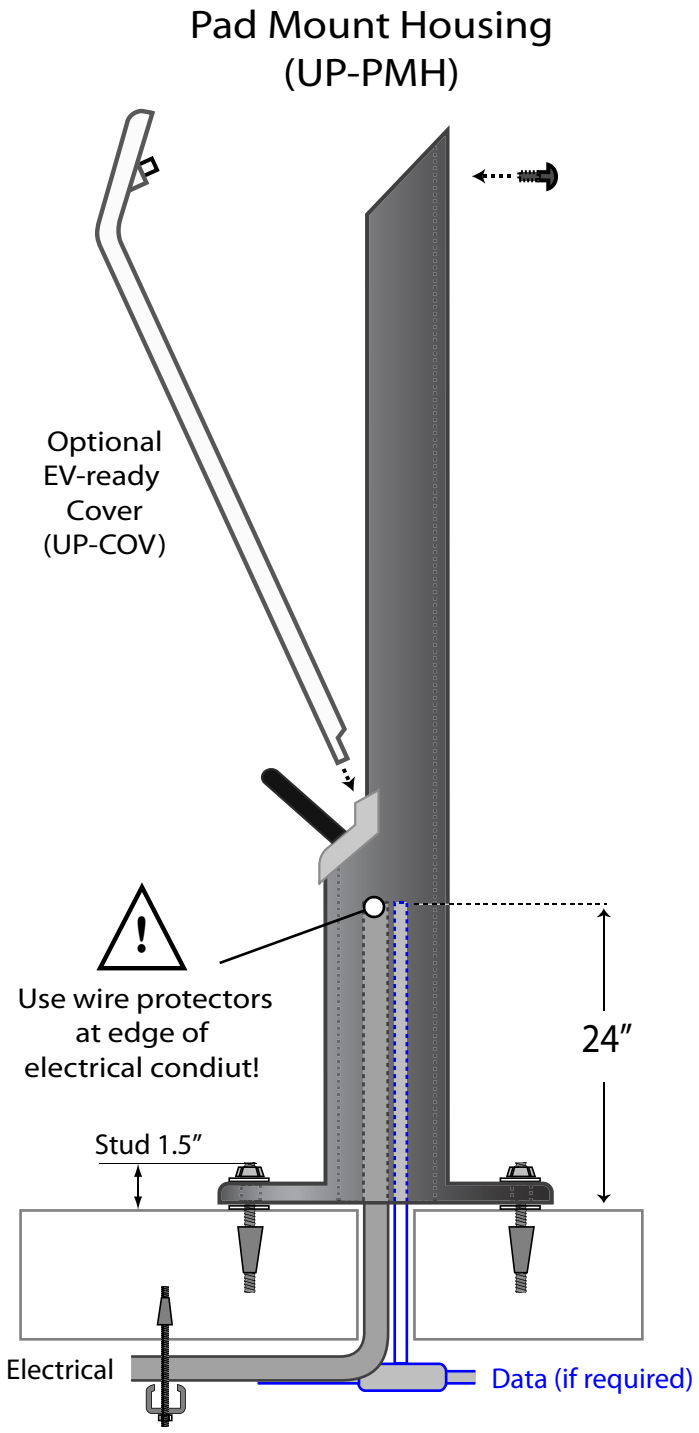

Option B - Pad Mount Housing In Ground Level Location (sub-surface feed)

Install Pad Mount Housing: 7A

This option is recomended for both existing and new construction, parling lots, drivways, and city streets where sub surface electrical feed can be acheived. See GRIDbot best practices guide (UP-BPG) for more informaiton on site design and layout.

Before pouring concrete, local structural engineering practices must followed.

Trench for conduit and dig holes for concret pads.

To alow for future upgrades we recomend running electrical conduit large enough to contain four (4) current carrying conductors rated for 32Amp continuous @ 240VAC and one (1) earth ground conductor of similar size.

Always size conductors with consideration for voltage drop, and in accordance with NEC conduit fill, and temperature requirements.

Run the elecrical conduit so that it ends 18" above concrete surface. Some installations may require an additional conduit for a Cat 5 wire between stations in multiple station configurations (See Networking Options Guide (UP-NOG).

Create concrete form structrure. Attache four (4) J-bolts and Tri-Grove secutity nuts to template (UP_PMT) provided with pad mount housing (UP_PMH) . Attache J-bolts so that they protrude 1.5" from the template.

Place template on the concrete form structure and insure that it is centered and square to the sidwalk. Pour concrete.

Attach wire protectors to the end of conduit before pulling conductors.

Lower housing over onto studs. Use a spirit level to make sure housing base is perfectly level. Use washers under housing to make adjustments housing base level as needed.

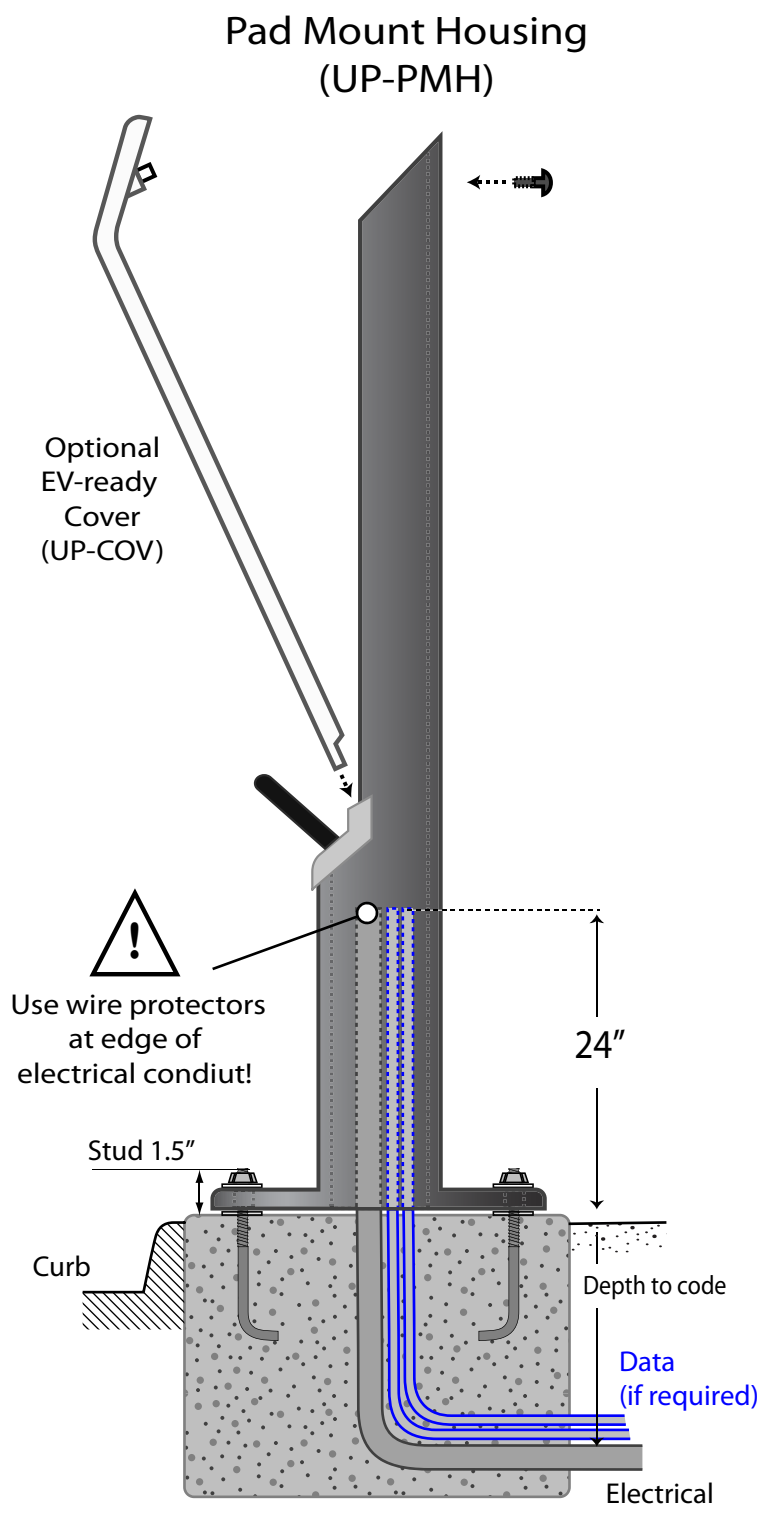

If the charging staion head is to be installed later, attach the optional "Ready-4-EV" cover (UP-COV) by sliding the bottom end of the cover into the housing slot provided, then rotate cover into closed position and fasten with the provided secirity bolt. Do not over tighten!

Option C - Direct Burial Housing In Ground Level Location (sub-surface feed)

Install Pad Mount Housing: 8A

This option is recomended for new construction, parling lots, drivways, and city streets where Direct Burial can reduce the cost of instalation and provide a stronger solution while sub surface electrical feed can also be acheived. See GRIDbot best practices guide (UP-BPG) for more informaiton on site design and layout.

Before pouring concrete, local structural engineering practices must followed.

Trench for conduit and dig holes for concret pads.

To alow for future upgrades we recomend running electrical conduit large enough to contain four (4) current carrying conductors rated for 32Amp continuous @ 240VAC and one (1) earth ground conductor of similar size.

Always size conductors with consideration for voltage drop, and in accordance with NEC conduit fill, and temperature requirements.

Run the elecrical conduit so that it ends 18" above concrete surface. Some installations may require an additional conduit for a Cat 5 wire between stations in multiple station configurations (See Networking Options Guide (UP-NOG).

Create concrete form structrure. Attache four (4) J-bolts and Tri-Grove secutity nuts to template (UP_PMT) provided with pad mount housing (UP_PMH) . Attache J-bolts so that they protrude 1.5" from the template.

Place template on the concrete form structure and insure that it is centered and square to the sidwalk. Pour concrete.

Attach wire protectors to the end of conduit before pulling conductors.

Lower housing over onto studs. Use a spirit level to make sure housing base is perfectly level. Use washers under housing to make adjustments housing base level as needed.

If the charging staion head is to be installed later, attach the optional "Ready-4-EV" cover (UP-COV) by sliding the bottom end of the cover into the housing slot provided, then rotate cover into closed position and fasten with the provided secirity bolt. Do not over tighten!

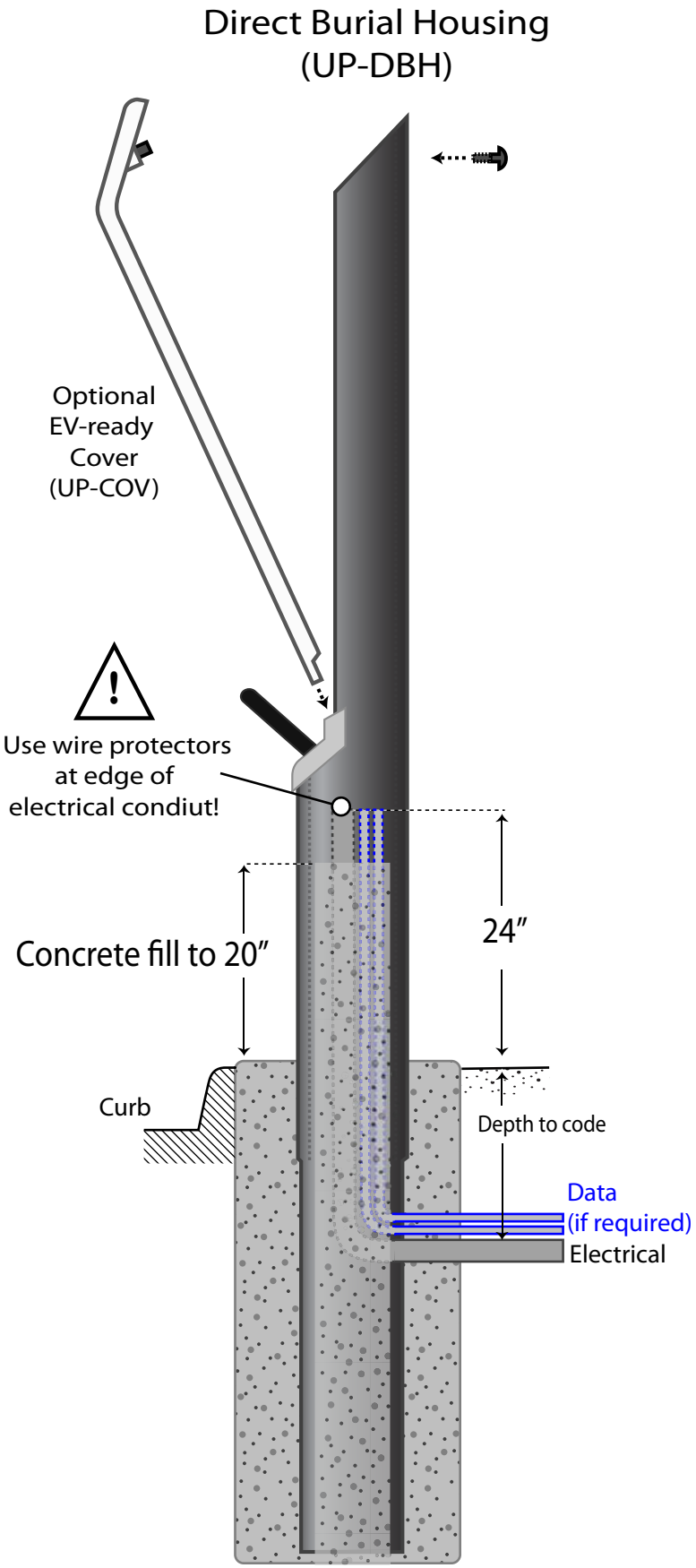

Option D - Wall Mount Where limited Vehicle Access is Apropriate

Install Wall Mount Housing: 9A

Locate an internal vertical structural beam or studs in the wall. Make a virtical line on the wall that indicates the center line of the beam. Make a horazontal line 24" above ground level .

Place the wall mounting bracket (UP-WMH) virticaly on the center line with the bottom of the bracket on the horazontal line. Use apropriate hardware to secure the bracket to the wall so the bracket can withstand a 300Lb downward or 200Lb outward force .

Insert cone nuts into bracket. Pushing towards the wall gently while turning the cone nuts will alow them to rotate into place. Slide nuts down into the right position.

Lay housing down on a soft surface. Using a hole cutter designated for your conduit size, drill conduit knockout hole(s) in base plate of housing. Pilot holes are provided in the bases.

Bolt the housing to the bracket leaving the bolts loose enough to make height adjustments. Slide the housing up or down until the housing is at the correct height for local ADA or non-ADA codes.

To alow for future upgrades we recomend running electrical conduit large enough to contain four (4) current carrying conductors rated for 32Amp continuous @ 240VAC and one (1) earth ground conductor of similar size.

Always size conductors with consideration for voltage drop, and in accordance with NEC conduit fill, and temperature requirements.

Some installations may require an additional conduit for a Cat 5 wire between stations in multiple station configurations (See Networking Options Guide (UP-NOG).

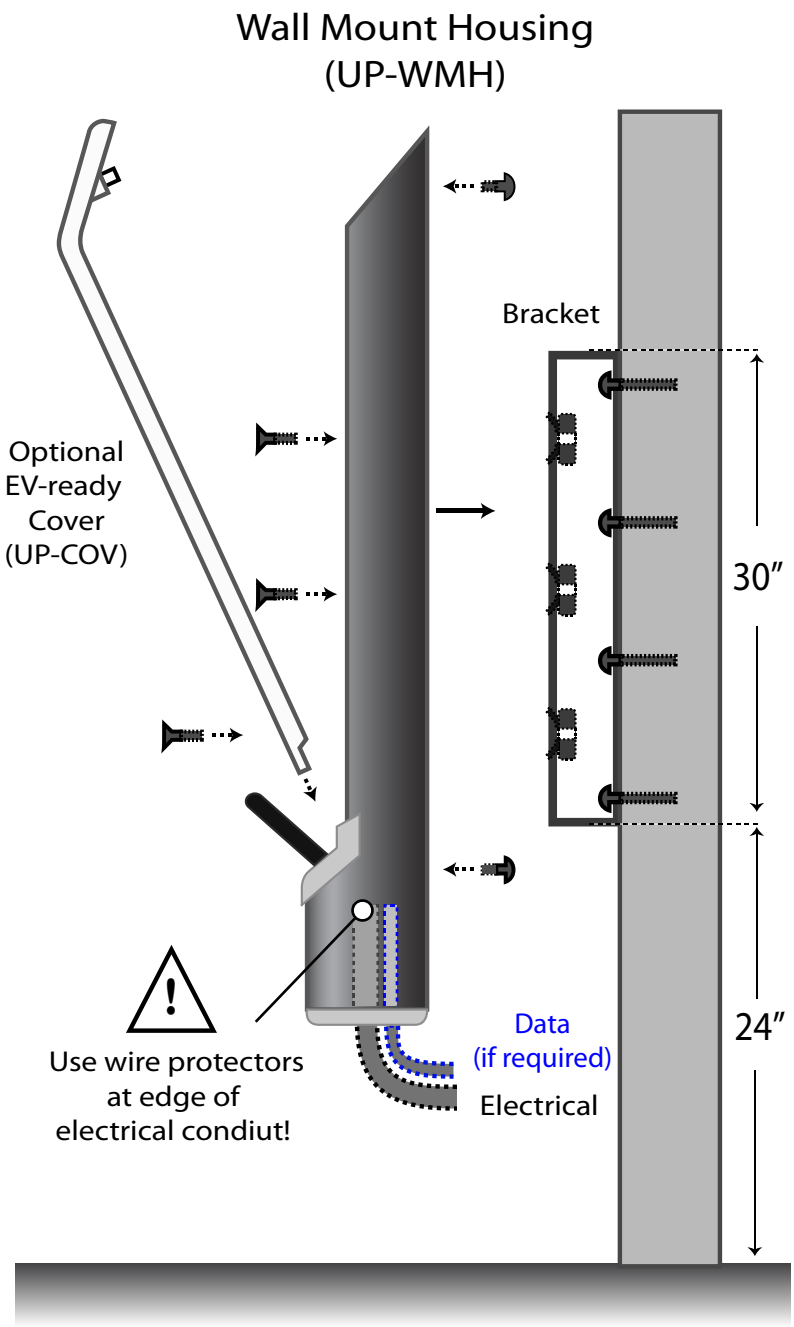

If the charging staion head is to be installed later, attach the optional "Ready-4-EV" cover (UP-COV) by sliding the bottom end of the cover into the housing slot provided, then rotate cover into closed position and fasten with the provided secirity bolt. Do not over tighten!

For a more aisthetic pleaseing result, conduit may be run in or on the other side of the wall. A side knock out kit (UP-SKK) may be ordered separately that alows for conduit entry thourgh the side or back of the housing tube. See page (x) for (UP-SKK) instructions. Note conduit knockouts on the housing tube may NOT be made above the lowest security bolt.

Option E - Use of Housing Tube Side Knockout Kit (UP-SKK)

Use this option when electrical feed from below the station cannot be acheived. This kit may be used with any of the UP housings available.

Adhere Knockout Block: 10A

Using the knockout block provided in the kit, mark a desired knockout location that is just below the lowest security bolt.

Remove adhesive tape protective film, and adhere the knockout block to the station. Press firmly.

Use the pilot hole to center a quality carbide 1-1/4" hole cutter, and cut through the block and housing wall.

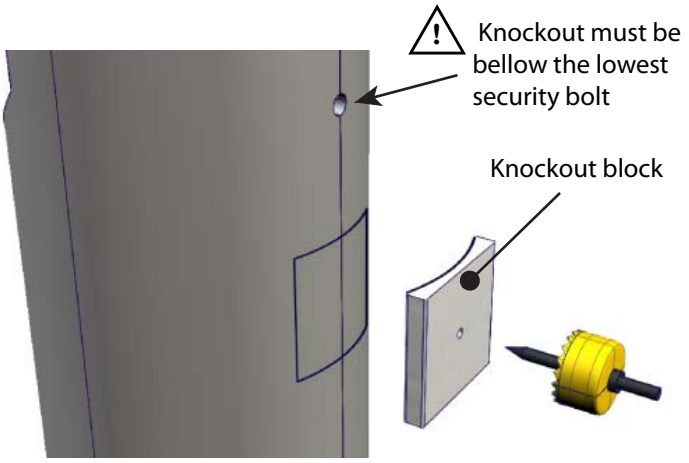

Fit Thru bulkhead fitting and attach conduit: 10B

Attach the rest of the thru-bulkhead fitting through the hole. Be sure to attach the plastic wire protector to the inside end of the nipple before pulling conductors.

Run appropriately sized electrical conduit to contain the 5 correctly sized conductors (4 current carrying) in accordance with NEC conduit fill, and temperature requirements.

NOTE: Some installations may require an additional knockout kit and conduit for a Cat 5 wire between stations in multiple station configurations (see Data Connectivity Options leaflet).

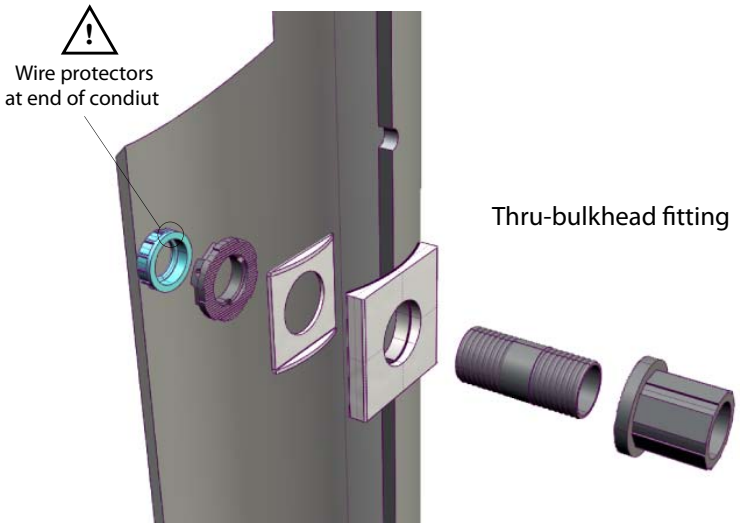

Pull Conductors 11A

Size 3 electrical conductors according to NEC code using the following continuous load amperage limits: Line1 (30 Amps continuous), Line2 (30 Amps continuous), and earth ground sized to match the largest current carrying conductor.

Remove the optional "ready 4 EV) station cover if aplicable, and pull electrical conductors leaving 40 inches of conductor extending from inside edge of conduit wire protector. Pull Cat5 data cable if required leaving 50 inches of cable extending from top edge or conduit wire protector.

Pull Conductors 11B

Unpack the Station Head., lay it on a soft surface near the staion housing, and unravel the charging cord.

Thread the level-2 coupler at the end of the cord downwards though the black rubber Strain Relief Loop near the base of the station. pull most of the cord through.

Before connecting power wires to the UP80J, please carefully read the Wiring options section of this manual on page 4. If you are not 100% sure of the type of electrical service you are connecting to, call your local utility for assistance.

Connect the ground conductor (green) to the grounding bar on the staiton head unit.

Insert the 240VAC conductors into the spring connectors labeled 240VAC and push down spring tabs.

Click the Cat 5 data cable into the data input port at top of station. (See data options leaflet for more details).

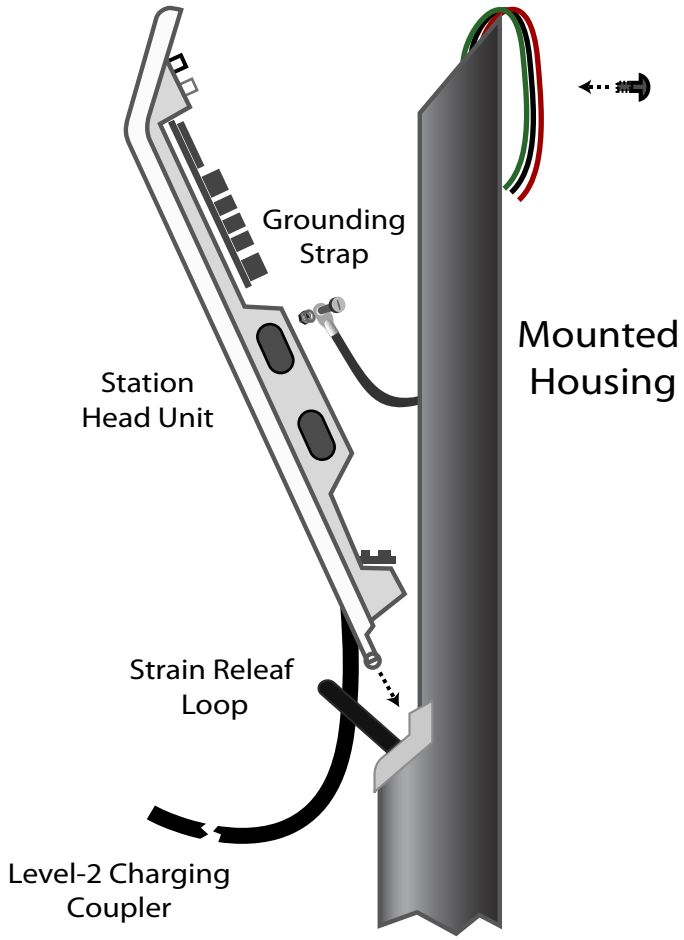

Check Grounding Strap Connections 11C

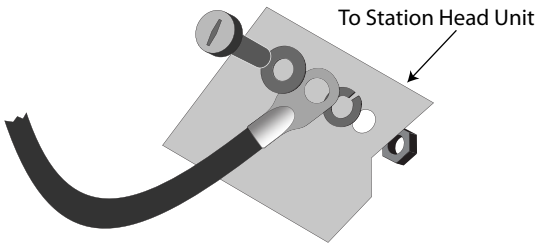

When re-attaching the grounding strap ensure that the spring washer is complately compressed and that the washers are in the following order: Bolt, Flat washer, Grounding strap, Spring washer, Station head chassis, then Nut.

Replace Station Head and Make Connections: 12A

Before connecting power wires to the UP80J, please carefully read the Wiring options section of this manual on page 4. If you are not 100% sure of the type of electrical service you are connecting to, call your local utility for assistance.

Connect the ground conductor (green) to the grounding bar on the staiton head unit.

Insert the 240VAC conductors into the spring connectors labeled 240VAC and push down spring tabs.

Click the Cat 5 data cable into the data input port at top of station. (See data options leaflet for more details).

Pull on all conductors to check that they are firmly attached. Tie down conductors with provided tie-downs.

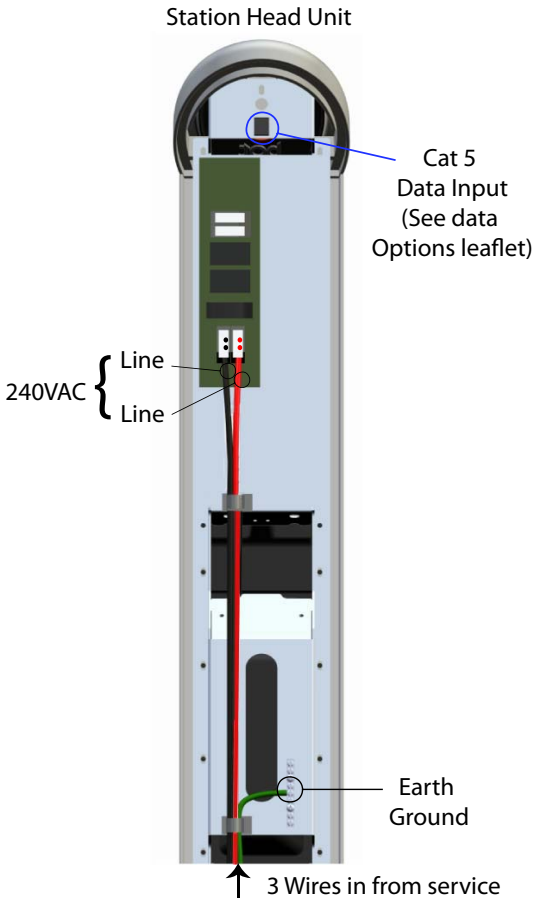

Power-on and provision: 12A

Close station head and secure it using the top security bolt #1, then return power to the station at the service panel. Refer to Network Provisioning Guide for stations that are networked.

City of Houston – EV Charging

TROUBLE-SHOOTING – Tranquility Garage

Error State A

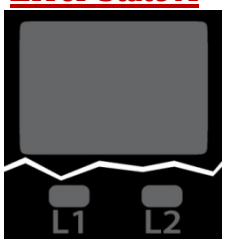

Station screen is off and port status lights are off

1. Security places Out-of-Order bag over station and reports to Fleet Manager.
2. Report to Fleet Manager to contact the maintenance staff.
3. Maintenance to check breakers and report back to Fleet Manager.
4. Maintenance returns Out-of-Order bag to Security.

Error State B

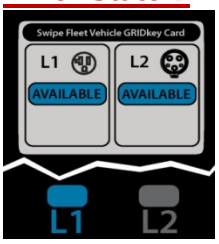

Screen says available and one or both status lights are dark

1. Security swipes the "Security Reset Key" to reboot the station.
2. If this resolves the error, report to the Fleet Manager – no other action required.
3. If "Reset" doesn't resolve the error, Security places Out-of-Order bag over station and reports to Fleet Manager.
4. Fleet Manager resolves and returns Out-of-Order bag to Security.

Error State C

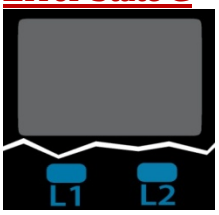

Station screen is off and one or more status lights are on

1. Security swipes the "Security Reset Key" to reboot the station.
2. If this resolves the error, report to the Fleet Manager – no other action required.
3. If "Reset" doesn't resolve the error, Security places Out-of-Order bag over station and reports to Fleet Manager.
4. Fleet Manager resolves and returns Out-of-Order bag to Security.

Error State D

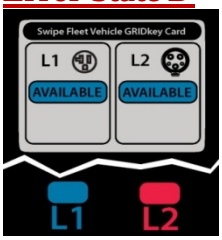

Screen says available and one or more status lights are red

1. Security swipes the "Security Reset Key" to reboot the station.
2. If this resolves the error, report to the Fleet Manager – no other action required.
3. If "Reset" doesn't resolve the error, Security places Out-of-Order bag over station and reports to Fleet Manager.
4. Fleet Manager resolves and returns Out-of-Order bag to Security.

Error State E

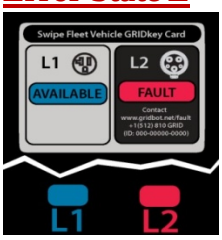

Screen says "fault" and one or more status lights are red

1. Security swipes the "Security Reset Key" to reboot the station.
2. If this resolves the error, report to the Fleet Manager – no other action required.
3. If "Reset" doesn't resolve the error, Security places Out-of-Order bag over station and reports to Fleet Manager.
4. Fleet Manager resolves and returns Out-of-Order bag to Security.

REPORTING:

Fleet Management: Amber Eldridge xxxxx@houstontx.gov - (XXX) XXX-XXXX
All reporting should contain both the "ERROR STATE" and the unit number on the station.

EMERGENCY GUIDE:

SMOKING OR ON FIRE – CALL 911 – Maintenance to disconnect power to the station or group of stations using the breaker boxes on the garage wall. After EMS evaluates fire danger, Security places Out-of-Order bag over station and reports to Fleet Manager.

CORD OR STATION APPEARS DAMAGED IN ANY WAY - Maintenance to disconnect power to the station or group of stations using the breaker boxes on the garage wall. Security places Out-of-Order bag over station and reports to Fleet Manager.

STATION IS LEANING OVER OR LOOSE - Maintenance to disconnect power to the station or group of stations using the breaker boxes on the garage wall. Security places Out-of-Order bag over station and reports to Fleet Manager.

STATION IS FOUND TO BE OPEN OR EXPOSED WIRING - Maintenance to disconnect power to the station or group of stations using the breaker boxes on the garage wall. Security places Out-of-Order bag over station and reports to Fleet Manager.

MAINTENANCE:

Cleaning: Routine cleaning should include wiping down the unit and the cable as they will pick up dust and soot from normal use. Power washing should never be used on the units.

Inspection: Routine visual inspection of the units can be done by Security, Maintenance or Operations Staff. Occasional inspection of the wheel-stops should identify loose stops for re-gluing. Security will be able to identify most issues through security cameras.

GENERAL INFORMATION:

Security Reset Key: This creates a system re-boot, so will interrupt charging for both outlets on the station. If one car is being successfully charged while the other charger is malfunctioning, Security is to place Out-of-Order bag over the station and report problem to the fleet manager.

Placing Out-of-Order Bags on Stations: Out-of-Order Bags should be zip-tied to the cable-rest to avoid theft. Bags should always be returned to Security once issues are resolved.

Unit Integrity: Under no circumstances should anyone open or attempt to open a unit. Each unit is secured with a security screw that should not be tampered with.

Appendix G: City of Houston – Driver Charging Information
(sample below is placed in the Level-2 Vehicles – similar instructions are also provided for Level-1 vehicles)

[[GRIDkey]]

Begin Your Trip

Hold your key fob close to the GRIDkey logo on the charging station. Within a few seconds the station will recognize your vehicle, end the current session and unlock the correct charging port.

Unplug Level 2 plug handle from your car and store plug handle in the L-2 station holster below.

For Vehicle or charging related problems call
Security at:
XXX-XXX-XXXX

[[GRIDkey]]

End Your Trip

Hold your key fob close to the GRIDkey logo on the charging station. Within a few seconds the station will recognize your vehicle and authorize charging.

Lift the Level 2 plug handle from its holster and insert it firmly into your car's Level 2 receptacle.

For Vehicle or charging related problems call
Security at:
XXX-XXX-XXXX

GRIDbot Market Potential Report

GRIDbot Electric Vehicle Charging Demonstration

June 29, 2012

Christine Herbert, Good Company Associates
Richard Donnelly, GRIDbot

Introduction

In recent years a chicken/egg scenario was presented, where potential investors in the electric vehicle (EV) industry waited for the development of infrastructure solutions; and infrastructure solution providers were stymied by the slow pace of development in the electric vehicle market. But EVs have now seemingly reached a turning point in the US, in part because of the federal funding provided to launch both markets.

EV charging infrastructure solutions can be divided into "private" chargers, and "shared" or public charging stations. In 2009 there were 246Million cars in the USA, but only 53Million covered garages. Given that even this 21% of the population with private garages will still need to charge cars at places they work or visit, it is expected that much of EV charging will need to be available at "shared" or public stations (multi-family residences, workplaces, park and ride locations, shopping, airports, train stations, libraries, restaurants, movie theaters, and behind the fence fleet facilities). The type of solution needed will depend on the users and the infrastructure owner's business plans.

Despite such potential advantages conferred on EVs from an existing electricity grid now transforming into a Smart Grid, significant financial, safety, and technological issues remain concerning individual charging solutions for the "shared" segment. Public charging solutions using standard household outlets (Level 1) appeared in limited numbers in 2009, while January 2010 saw the official ratification of an engineering standard known as SAE-J1772 (Level 2). This defines a common "station coupler" and corresponding "inlet" on all new EVs allowing for faster 240V AC public charging in the USA.

At this time, cities, utilities, and other businesses contemplating an investment in EV charging infrastructure must balance the risks of early adoption against the opportunity costs of waiting for the market to saturate. Consequently, they seek to gain real-world experience through pilot projects over the early years, in order to work through the myriad of issues and gain detailed operational experience, even as the financial, technological, and user acceptance issues are worked out.

Beyond potential EV infrastructure owners, emerging EV users face a somewhat different challenge: either changing their driving habits, or extending drive time by using charging stations when away from home base. Any solution to meet the needs of this small but diverse set of users must be easily adopted and affordable. DOE Clean Cities recently published handbooks for fleet managers, consumers, electric contractors, and public charging infrastructure hosts, specifically focused on the challenges of Plug-in Electric Vehicles (http://www1.eere.energy.gov/cleancities/publications.html) With the expanded understanding of these new markets, experience and the collective knowledge of broad user behavior and preferences, there is an emerging interest in planning and implementation. In many ways, the nascent EV market is at the cusp of change, and rapidly progressing from early adopter status into full-fledged commercialization.

Electric Vehicle Deployment Potential

The Environment America Research & Policy Center report (Tony Dutzik et al., *Getting Off Oil: A 50 State Roadmap for Curbing Our Dependence on Petroleum*, Environment America Research & Policy Center) projects that seven percent of all new light-duty vehicles sold by 2025 will be electric vehicles. Between 2025 and 2030, the scenario assumes a rapid, linear increase of an additional 15 percent, so reaching roughly 22 percent by 2030. On a national level, Wall Street Journal reported that the market for small and medium sized cars is increasing at a much higher rate than larger cars (http://online.wsj.com/mdc/public/page/2_3022-autosales.html). They stated that cars tend to last much longer these days, so the number of people with cars ten years or older is skyrocketing. As a result, this pent up demand is seen as contributing to stronger sales in years ahead. Young adults aged 18 to 34 accounted for nearly 30 percent less of new cars bought in 2011 than in 2007, likely an impact of lower employment and earning capability.

Pike Research forecasts that the market for plug-in hybrid and battery electric passenger cars and light duty trucks will grow at a compound annual growth rate (CAGR) of 106% between 2010 and 2015, resulting in sales of more than 3.24 million vehicles during that period (http://www.pikeresearch.com/research/plug-in-electric-vehicles). By their calculation, this amounts to almost 300,000 electric vehicles in North America by 2015. While this is more conservative than earlier predictions, for the early market, the economy is showing signs of growth that are promising to this industry.

As the economy rebounds, the adoption of new technology like electric vehicles is likely to meet or exceed these predictions, depending on the customer acceptance. With this expanding deployment, comes a demand for the availability, coordination, and accessibility to infrastructure. CAFÉ standards that require much higher efficiency vehicles involve auto manufacturers offering EVs. Like other vehicle requirements, manufacturers have to absorb some of the early development costs to meet the standards – whether safety, emissions related, or fuel efficiency.

There are a wide number of markets that make up this EVSE industry. Understanding the various customers and their expectations help to understand that there will be a variety of products and technologies that make up this market. Product options like pricing, ability to communicate, charging time, and vending options will begin to differentiate products within the market.

The markets for EVSE can be divided into 3 main categories:

1. Personal - intended for use by a single person or family in a personal driveway or garage,
2. Shared - intended for shared use by various people, in a commercial setting; and
3. Fleet - intended to be shared by drivers, but managed by the individual business.

Figure 1: GRIDbot Projection of the 2015 EVSE Market:

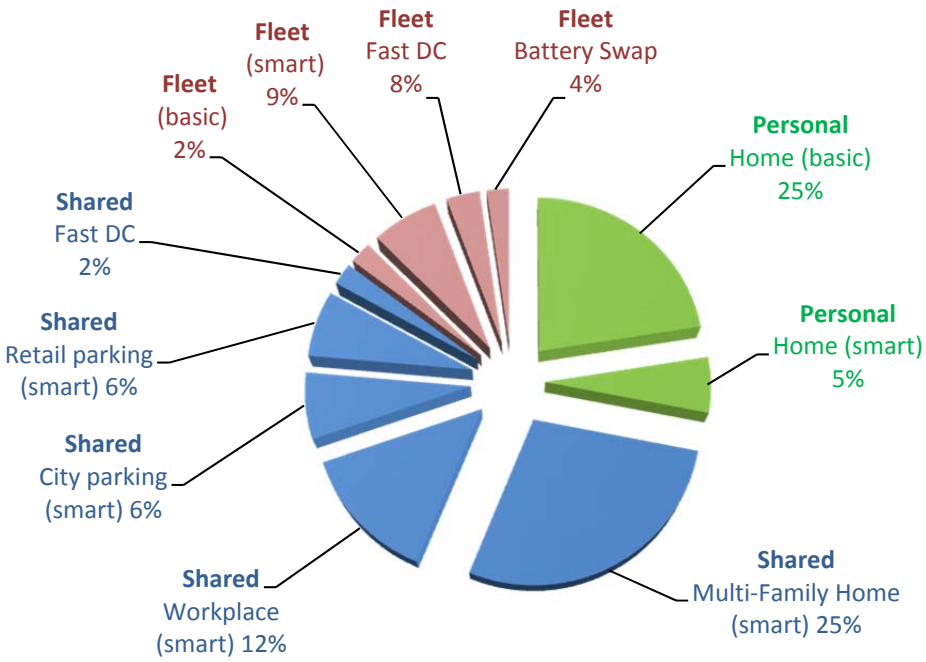

GRIDbot Technology

As a privately owned and operated company, GRIDbot, LLC, is an innovative, turnkey solution provider that manufactures and provides Electric Vehicle Service Equipment (EVSE) with management solutions to cities, utilities, and private businesses (primary customers). These customers will benefit from owning a revenue-generating infrastructure in advance of a predicted dramatic increase in the EV user population. GRIDbot also creates value for EV subscriber customers (secondary customers) that use the charging station infrastructure by providing a friendly, convenient way for EV users to connect to the Smart Grid and fuel up.

The GRIDbot hardware-based solution is two-fold: shared public pay per use charging stations and shared fleet charging stations. The public stations are metered electrical outlets housed in an attractive brushed metal post, capable of being remotely switched on and off on a per-use basis when activated by a text message or RFID card. Fleet charging stations will be similar in design to the public station, but designed to accommodate a fixed solution for fleet parking lot based-charging stations and can also provide EV mobile phone access or RFID access to public users. Credit card readers have been found to be less secure than a SMS contact, which is the reason for this option. In addition, for small transactions, using the SMS access allows the user to avoid transaction costs that in some cases could exceed the cost of the charge.

Figure 2. GRIDbot UP series – now includes three models (pictured below)

With these three models, customers can choose between the UP80J which has a single level-2 port; the UP100J which has a single level-1 and single level-2; and the UP160J which has two level-2 charging ports. All models have been designed with modular components that allow for product upgrades or changes as the customer needs change.

GRIDbot design features

The GRIDbot primary customer target market includes City, State and Federal organizations, large retail businesses, multi-family residential businesses, and entrepreneurs that will seek to deploy electric vehicle charging infrastructure. GRIDbot offers these customers a variety of options:

- **EV Vending Infrastructure Solution.** This allows for the charging to be billed to or paid by a customer, either based on $/kWh used or a $/Hr, similar to parking meters.
- **EV User/Subscriber Solution.** This option allows for hassle-free access to the network of stations using GRIDbot's patent pending CAP interface (Charge Availability Prediction). This interface allows a customer to locate stations, check availability and initiate a charging session

through a cell phone access, during the free trial period. After an initial free period, the customer can sign up for continued access through a subscription service.

- **Advertising/Market Data Solution. For retailers that wish to offer ongoing free charging and parking to entice customer into their restaurants or stores.** GRIDbot offers stations owners a way to generate revenue by charging 3rd party advertisers who seek to use GRIDbot's highly targeted marketing tools in the form of advertising and market research products**.** EV user behavior is captured and mined to offer shopping discounts, targeted advertisements, and other special offers via email and SMS.

Consumer Surveys

As consumer interest in EVs remains high, there is both a curiosity and concern about how an EV might impact people's lives. Generally consumers are looking to the well known manufacturers like Nissan, Chevy and Toyota when shopping for Plug-in Electric Cars or hybrids in this early market. However, every major manufacturer has an EV model in the plans and there are a number of new manufacturers entering the US car market. The question is when they roll out and with what option differences.

Pike Research conducted a web-based survey of a sampling of US consumers in fall of 2011 (http://www.pikeresearch.com/research/electric-vehicle-consumer-survey). They noted that price sensitivity continues to loom over the industry. Their survey found that of 1,051 respondents, 40% were likely or extremely likely to purchase an EV, if the price was right. When considering the "right price", the customers assumed there would be some additional up-front cost, which was acceptable, because of the fuel-cost savings. The federal tax credit of $7,500 which is available for the purchase of an EV helps to make up that difference.

Range anxiety is another primary concern of consumers, in spite of actual driving practices. Pike Research found that nearly three-fourths of their respondents (74%) drive 40 miles or less to work daily and therefore would be well served by a plug-in hybrid electric vehicle (PHEV). In several surveys, potential customers identified their preferred charging to be available at home and preferred secondary charging site to be at work. City of Houston fleet drivers' use of the vehicles is just beginning to take off, but there is some initial hesitation about whether they will "go too far". The limited range is now requiring them to be conscious of their driving distances. The longest reported trip to date was 28 miles. The onboard trip-planning or reservation system will help to assure them that the trip they have planned is well within the car's range.

The concept of "charging stations" that look like, or are situated similarly to gas stations continues to be prevalent. This suggests that the industry needs to do a better job of demonstrating this new model of individual transportation to encourage the paradigm shift. The City of Houston fleet drivers have reported how nice it is to not have to stop at a gas station, especially in inclement weather, or late at night. They compared the charging to their cell phones, which they just plug in at the end of the day and it stays available all day.

Similar to the cell phone adoption which has fully saturated the market – EVs will be adopted when the consumer finds them convenient and cost-effective and compatible with their lifestyles.

Houston is EV Ready

Houston promised to be one of the first places in the US to see wide-scale adoption of electric vehicles. It has begun to lay the groundwork for an extensive electric vehicle charging network throughout the city to allow more people in Houston to reduce their dependence on gasoline. This includes expedited permitting, EV ready building codes adoption, and other efforts to advance this market adoption. But specifically, they believe that a lack of charging infrastructure will hinder the market growth, and charging stations minimize the chicken/egg dilemma mentioned earlier

Since 2004, the City of Houston has been replacing much of its light duty fleet with higher efficiency hybrid electric vehicles, and in 2009 began a process to use EVs and PHEVs as a major new component of its fleet. As part of this process, the City retrofitted 15 Toyota Prius Hymotion battery systems to extend the electric vehicle part of driving. Charging equipment has been installed in various locations, including Tranquility Garage. In addition, Houston created this new centralized fleet department to consolidate vehicles and increase the efficiency of vehicle use of their internal fleet cars. This included replacing older, inefficient vehicles with high emissions with newer, cleaner, more efficient vehicles. As part of this transition, a fleet management computer system has been acquired and is being deployed in 2012. They are also part of a Texas Corridor planning effort with the other major cities in Texas.

The City participates in the Rocky Mount Institute's Project Get Ready (http://www.rmi.org/project_get_ready); was chosen as the one Texas city where the Nissan LEAF was first introduced; and is a target city in DOE's national initiative entitled The EV Project (http://www.theevproject.com). Houston is also home to the launch of the private sector company eVgo (https://www.evgonetwork.com) founded by NRG Energy to install 100 public charging stations in the Houston region, an initiative that is being extended to other regions of the country. There are currently 11 stations open and 4 under construction which include both AC and DC charging units.

Outreach to Other Markets

While Texas has seen localized advocacy for EV, there is little market differentiation from region to region; all basically facing the same problems. However, generally we see adoption is easier in areas where there are shorter commuting and easy access to mass-transit. These areas do not rely exclusively on their personal vehicle nearly as much as areas like Texas or Canada that drive longer distances and have relatively few transportation options. The challenges for EV charging infrastructure planning in the various regions and the solutions they consider are different, but not impossible. Since moving forward often entails the need for funding and policy support, political will always plays a part.

In Canada, GRIDbot has been involved in an EV infrastructure plan that was coordinated by Hydro Quebec, and GRIDbot was one of three charging devices with networked services which were selected to be qualified for the harsh Canadian conditions. The Canadian government is planning to ramp up their investments and provide EV charging along various highways at rest stops and intermediate locations to support the broad adoption of EVs.

Other cities in Texas are in discussion and have received DOE funding to coordinate planning and receive stakeholder input, as they consider various solutions to enhance the adoption of EV in the Texas Triangle area that connects the Dallas-Ft. Worth, Austin, San Antonio, and Houston metropolitan areas.

In Houston, GRIDbot stations were installed at the the Cypresswood Estates apartment complex, the newest LEED rated, all accessible living community that is a Houston County Housing Authority project. This new complex was the first multi-family installation in Houston. GRIDbot was also recently chosen to be installed by Oncor Utility at a number of their facilities in Dallas. In other markets like Florida and California, GRIDbot is working to establish a distribution network that will provide a sales, operations and maintenance framework for the expansion of their business.

In California GRIDbot is responding to an RFP coordinated by the Los Angeles Department of Water and Power (LADWP) with its partners from the Southern California Regional Plug-In Electric Vehicle Plan (SoCal EV) who have recently launched SoCalEV.org to extend their cooperative efforts from planning to implementation. This RFP is for 400 shared commercial charging stations.

Utility Impacts

In Texas, we have recently seen one Retail Electric Provider offer a simple "time of use" rate for electricity that is slightly higher during daytime hours, but offers free power at night. This is an innovative offering that may be the first of many such options that become available in a deregulated or vertical energy market. With advanced technology like the GRIDbot charging units, an owner would be able to set the charging to begin and end during certain times of day. Texas utilities understand that this type of impact management is especially important when a number of vehicles are added to a particular line and they all come home and plug in their vehicles after work or school, which coincides with the peak demand on our ERCOT grid. The EV Project has collected charging data from over 4,000 charging units in the U.S. and includes almost 3,300 vehicles (mostly LEAFs). This DOE project recently published a report to address the impacts of EV on the electric grid, which states that by far, the greatest amount of charging is done after 8:00 pm and before 4:00 am, and that significant load can be postponed further, or scheduled to begin after midnight.

To mention just a few specific utilities that are quickly looking for ways to encourage the adoption of EVs, Oncor, which is the largest service provider in the deregulated market, suggests the cost to operate an electric vehicle is around 3 cents/mile compared to 14 cents per mile for a traditional vehicle. They tout their diverse mix of renewable and fossil fuels, which helps to reduce price volatility, such as seen in the gasoline market recently. They specifically identify the time to avoid EV charging as 12 noon to 7pm, when there is high system demand and minimal wind power available.

Austin Energy is currently offering a rebate for home EV charging installation and an EV Everywhere program that combines the home use and public access to charging. They have installed approximately 110 public and workplace EVSEs and have worked with the businesses to arrange for these public-private partnerships within their service territory.

NRG is a Retail Electric Provider in Texas, whose goal is to provide complete range confidence across the metropolitan areas where eVgo operates. That means placing charging stations at the city center and at

locations extending outward along major thoroughfares and at strategic destination points. They then offer customers a choice of "subscription" rates for their EV charging that ranges from residential use, public use, or "as much as you can eat" plan. While the customer may be paying a higher rate for their energy, they see this as a standard fee that is easily within their budget, less than they were paying for gasoline, and cost assurance for their future use.

Support of State and Federal Policies

The promotion and adoption of electric vehicles will be far more successful if there is continued support from the State and Federal levels. Expanding the programs designed to reduce pollution to include helping individuals and businesses to buy electric vehicles and expand EVSE infrastructure. State programs such as the Texas Emission Reduction Program (TERP) and Low-Income Vehicle Repair and Replacement Program (LIRAP) could emphasize the replacement of internal combustion engine vehicles with dedicated electric vehicles, or subsidize the installation of infrastructure for local governments. These programs currently offer limited funding for various alternative fuel infrastructure programs including propane, ethanol, biodiesel and natural gas. Federal policy currently incents the purchase of EVs, but this tax incentive is very difficult for local governments or non-profits to realize.

The issue of charging for or reselling of electricity is often restricted to utilities, so becomes an issue in some regions of Texas and in other states. This has been taken up by various state and local policy makers, in varying ways. An example of new legislative work supporting EVSE services by private businesses can be found in Virginia:

> *Retail PEV charging services provided by an individual who is not a public utility, public service corporation, or public service company, do not constitute the retail sale of electricity if the electricity is used solely for transportation purposes and the person providing the PEV charging service has procured the electricity from an authorized public utility. The Virginia State Corporation Commission may not set the rates, charges, or fees for retail PEV charging services provided by non-utilities. (Reference Virginia Code 56-1.2 and 56-232.2:1 – can be found at: http://leg1.state.va.us/000/src.htm)*

Establishing some of the standards for signage, communication between stations and owners, and the enforcement of CAFE standards for automakers will continue to make EVs competitive and favored by the retail market. A goal to achieve the equivalent of a 62 mpg standard for vehicles could be reached by 2025, eliminating much of the fuel use, tailpipe emissions, and would result in an increase in electric vehicles entering the market.

Creative financing could be considered to help this new market address the cash flow financing cost which tends to stifle volume purchases of components and manufacturing, which affects EVSE pricing to the end customers. Programs that offer loan guarantees, revolving low interest loans, or other short-term options for the EVSE producers would help bridge the gap between low volume orders and scaled production runs.

Continuing support for the advanced research and technology development to improve the automotive battery technology will absolutely meet the needs of drivers to have longer range options with electric vehicles.

Conclusion

GRIDbot is entering the market at some disadvantage to those companies that were given large financial backing through stimulus funding. However, this TCEQ sponsored and City of Houston supported demonstration has given us an opportunity to advance our product with the additional visibility of this project. Our product has incorporated the most advanced technology into a very price competitive product, so we believe GRIDbot could very easily gain as much as 10% market share in the next few years.

Appendix G: Houston Advanced Research Center Technical Report - Emissions Analysis of the GRIDbot Electric Vehicle Charging Demonstration

See figure on following page

Emissions Analysis of the GRIDbot Electric Vehicle Charging Demonstration

Houston Advanced Research Center

June 2012

Credits

David Hitchcock, AICP
Project Director
Director, Sustainable Transportation Programs

Jeff Williams
IT/Database Management and Analysis

Zach Vernon
Geospatial Analysis

Houston Advanced Research Center

HARC is a 501(c)(3) not-for-profit organization based in The Woodlands, Texas dedicated to improving human and ecosystem well-being through the application of sustainability science and principles of sustainable development. HARC's mission is to move knowledge to action to improve human well-being and the environment.

Executive Summary

The Houston Advanced Research Center (HARC) worked with GRIDbot, Good Company Associates, and the City of Houston to provide technical support for the demonstration of the GRIDbot charging station infrastructure. In this project, GRIDbot technology has been deployed for City of Houston vehicles which have included plug-in hybrid electric vehicles (PHEVs – Prius equipped with Hymotion battery systems) and dedicated electric vehicles (EVs – Nissan LEAFs). Electric vehicle charging infrastructure is essential to meet the needs of the City of Houston's growing PHEV/EV fleet. This infrastructure is a part of the City's commitment to reduce fleet vehicle emissions. PHEVs/EVs cannot be successfully deployed without cost effective and consumer friendly support technologies. By facilitating the development of the GRIDbot technology, its more rapid commercialization of this clean technology can be furthered.

From September 2011 through April 2012, HARC collected data from the GRIDbot server, which reports vehicle charging activities. The system reported specific variables that were identified in designing the data system including basic vehicle identifiers, charging location, and charging characteristics. Electric vehicles do not communicate with charging systems on the battery system's state-of-charge (SOC). Consequently, a vehicle-based system is needed, such as the Nissan LEAF's CARWING reporting system, which allows vehicle owners to acquire vehicle trip and energy data. This project deployed GPS data loggers for the two 2011 Nissan LEAFs (EVs) and two retrofitted Hymotion Prius (PHEVs). In addition, vehicle data loggers were placed in the two Prius to gather data on vehicle operation, trip characteristics, and energy use as recorded by the vehicle.

The EV is fundamentally defined as having zero tailpipe emissions since it uses only electricity stored on the vehicle's battery system. This characteristic is important to Houston's air quality since tailpipe emissions are the primary factor included in transportation emissions inventories, modeling, and air quality decisions. Emissions are released with the production and distribution of electricity, but are accounted for separately in air quality modeling/decisions, just as the refinery emissions are reported analyzed separate from vehicles emissions. PHEVs (and HEVs) have a gasoline or diesel engine as the second power source. These engines produce tailpipe emissions that are included in mobile source emissions characterization and comparisons.

The GRIDbot charging station data provide a direct measure of energy requirements for each vehicle. The data reported from the vehicle itself provides both travel characteristics and energy use for that particular vehicle and its trips. These two systems (charging system and vehicles) collect and report data differently, and while they are somewhat comparable, they are not identical. For example, vehicles may fail to report trip data, but the GRIDbot system reports energy used to recharge that vehicle once is it plugged into a charging station. A vehicle may also be charged at another location that is not part of the GRIDbot charging infrastructure.

The important variables for emissions calculations are (1) the energy efficiency of these vehicles, i.e., distance traveled per unit of energy consumed – miles per gallon (mpg) for gasoline vehicles and miles per kilowatt hours (miles per kWh) for electricity – and (2) the distance of vehicle travel (miles). Although desirable, neither requires an inventory of all charging or all vehicle activity. The volume of charging (number of charging events) and the amount of travel (measured in miles and trips) provide an adequate set of data for the purposes of this project to estimate typical or average activities that produce associated emissions.

Emission reductions that occur as a result of replacing conventional vehicles with EVs and PHEVs are estimated by comparison with relevant vehicles and travel behavior. In the case of Nissan LEAFs, these

comparisons include the type of vehicle being replaced in a fleet (typically an older, more polluting vehicle), similar size and style vehicles, and computer modeling results for emissions estimates. In the case of the City of Houston's fleet, comparisons are also needed with higher efficiency hybrid electric vehicles, which increasingly comprise the majority of light duty vehicles. Emissions characteristics of these comparison vehicles are available from on-line data sources, such as EPA's Green Vehicle Guide http://ofmpub.epa.gov/greenvehicles .

Vehicle Emission Comparisons

The Nissan LEAFs with zero tailpipe emissions are replacing older, high emitting vehicles with an average emission rate of 0.48 grams per mile. Fleet emissions modeling from EPA's MOVES estimates that total 2006 vehicle emissions in the HGB region are 1.04 grams per mile for light duty vehicles.

Tailpipe Emission Comparisons

Comparison Vehicles/Models	NOx Emission Rates grams/mile
Nissan LEAF (2011/2012)	**0.00**
Fleet Vehicles Replaced by LEAFs Avg age 13.6 yrs old; Emission Standards	0.48
Comparably Sized Vehicles MY2012 Emission Standards	
Low Value	0.02
High Value	0.07
DOE Emissions Benefit Calculator	0.68
On-Road Emissions Models	
MOBILE6 Light Duty Vehicles (2006/HGB)	0.66
MOVES Light Duty Vehicles (2006/HGB)	1.04

Vehicle Activity Measures

Variable	Value
Trips/Day	2.62
Average Trip Distance (miles)	9.38
All vehicles	9.38
LEAF	5.18
Maximum Trip Length (miles)	52.5

Infrastructure Charging Activity Measures Sep2011-Apr 2012

Variable	Value
Total Electricity Used (kWh)	477.09
Average Electricity per Charging Event (kWh)	4.18
Number of Charging Events	157
Average Charging Duration (Hours)	2.0

Summary of NOx Emission Rates of Texas Electric Power System

Source	Area/Reporting Year	Grams/Mile*
EPA Air Markets Program, 2009	HGB/2009 Remainder of State/2009	0.0103 0.0347
eGRID	ERCOT/2007	0.0670
Texas Electricity Profile	Texas/2010	0.0991
Average		**0.0527**

*5 miles/kWh vehicle efficiency factor for Nissan LEAF. Based on 166 trips and 894 miles of travel reported from CARWINGS, September 2011 through April 2012. Average for all trips was 5.08 miles/kWh for the two test vehicles.

Vehicle Activity Measures

These fleet vehicles are used primarily for relatively short trips with an average trip length during the study period of 9.38 miles. The LEAFs averaged 5.18 miles per trip with the Prius averaging more than 10 miles per trip. Fleet drivers are familiar with the Prius, but not the LEAF, possibly reducing average trip length. The longest LEAF trip recorded during the study period was 28.4 miles, significantly less than half of the vehicle's range.

Infrastructure Charging Activity

More than 150 charging events were recorded from September 2011 through April 2012 for the five primary study vehicles. The average amount of time to reach a full charge was 2.0 hours with few events in which batteries were significantly depleted.

Infrastructure Charging Emissions

Although values are not comparable to conventional tailpipe emissions without life cycle emissions analysis, available data shows a wide range of values attributable to NOx emissions from the electric power system. These comparison values convert power plant NOx emissions to a grams-per-mile rate based on vehicle activity levels identified in this analysis. The emission rates vary by a factor of ten, from 0.0103 to 0.0991 g/mi.

Background

GRIDbot has designed and developed networked charging stations that are deployed at Tranquility Garage in downtown Houston at 400 Rusk Street. There are 28 separate stations with a Level 1 receptacle and a Level 2 coupler. These are located on the Aqua Level of the underground parking garage below Tranquility Park. The charging stations are GRIDbot's UP100J Networked Combo Level-1 and Level-2 EV Charging Stations.

A. Vehicles

Initial vehicles identified for this project include two 2011 Nissan LEAFs and three 2009 Toyota Prius hybrid electric vehicles (HEVs) that were retrofitted with Hymotion battery systems so that they became plug-in HEVs (PHEVs). Note that Hymotion conversions for the Prius are no longer available.

The 2011 Nissan LEAF is a five-door hatchback battery electric vehicle (BEV) manufactured by Nissan with these first commercially available electric vehicles coming to the Houston area in 2011. The LEAF has an 80-kW (110 hp) electric motor with a 24 kWh lithium ion battery pack. EPA rates the vehicle as having a range of 73 miles with a fuel efficiency rating of 99 miles/gallon (Nissan states that the range at 100 miles and the Federal Trade Commission also considers these vehicles to have the longer range). The LEAF has two charging receptacles; one with the standard SAE J1772-2009 connector for Level 2 (120/220 volts) charging and one for direct current (DC) fast charging (480 volts) using the CHAdeMO protocol. The LEAF includes a cable with the J1771-2009 connector that can be plugged into a standard household circuit (110/120 v) for Level 1 charging.

Fifteen Toyota 2009 Prius vehicles have been retrofitted with Hymotion battery systems. Those included in this project are City vehicles numbered 39983, 39984, and 40440 (referred to as Prius 83, 84, and 40). The three selected for this project use parking at the Tranquility garage where the GRIDbot charging stations are installed. The battery systems are A123 Hymotion L5 PCMs (plug-in conversion modules), which were added to the vehicles in 2011. These systems include batteries, power electronics, crash sensors, a charger, a battery management system, and a manual-electric interlock. The system does not require removal of the OEM battery pack and can usually be installed four hours.

The Hymotion batteries are ~5 kWh nanophosphate lithium ion batteries, a battery system developed by A123 to retrofit various hybrid electric vehicles with additional battery capacity. These weigh approximately 187 pounds. The vehicle's OEM battery system is nickel-metal hydride. The Hymotion system is designed so that the vehicle will use power from the Hymotion batteries first and once depleted, switch to the normal Prius power system. The battery system is not recharged by the vehicle or the regenerative braking system (i.e., Hymotion only operates in a charge depleting (CD) mode). The Prius

gasoline engine automatically starts when speeds reach 37 mph and is assisted by both the Hymotion and Prius battery systems during this time. Without the Hymotion system (when depleted), the Prius engine will start when the vehicle reaches 15 to 20 mph. The Hymotion manufacturer claimed that fuel use could increase to over 100 miles per gallon for an initial 30 to 40 miles of driving (until the Hymotion system was depleted). The charging time is generally stated as "overnight".

B. Data Acquisition Equipment

GRIDbot Charging System: Data acquisition from the GRIDbot charging system is discussed in more detail below. Basically HARC accesses the GRIDBOT data via a SQL Server Linked Server connection, acquiring specified data and then formatting for analysis and presentation in Excel workbooks. The data collection system and network is part of the GRIDbot system installed in Houston. The primary data needs by HARC were event based charging activities for specific vehicles and charging stations, and fundamental measurements of electricity consumption that could be matched to the vehicles.

Data acquisition for the vehicles included three components; GPS data loggers, on-board diagnostic (OBD) port data loggers specifically for the Prius Hymotion, and Nissan's CARWINGS data reporting for the LEAFs.

GPS Vehicle Data Logger: Vehicle data acquisition equipment included Qstarz BT-Q1000XT GPS data loggers. These are stand-along, battery powered units that have an auto-shutdown feature, which saves battery life, and a vibration sensor, which restarts data-logging when there is sufficient vibration to detect possible vehicle use. The units were tested and found to have a battery life of at least one full week. Self-powered units were selected to avoid the need to directly wire units into the vehicle's power, and to minimize visibility to vehicle drivers if the unit were wired into the vehicle's auxiliary power outlet. Testing of placement of these units found that the driver's side door was optimal since it allowed the units to start up quickly when the vehicle was accessed (to begin searching for satellite signals as soon as possible).

Figure 2. Qstarz BT-Q1000XT GPS Data Logger

On Board Diagnostic (OBD) Port Vehicle Data Logger: Data loggers were also placed in the OBD ports of two Prius Hymotion vehicles (Prius 83 and 84). These were OBD-II data loggers from IOSiX. These units are plugged into the vehicle's OBD port located just under the steering wheel, out of sight of the driver, and are powered by the vehicle. They can be configured to collect a wide range of variables that are reported to this port. A one-gigabyte microSD cards is sufficient to store 10,000 hours of driving. The SD cards can be easily removed for download or swapped with a replacement card. The units have

Bluetooth capabilities for wireless data access, but this feature was not needed for this project. The units were sufficient to collect data such as number of trips, time of trips, average speed, and fuel economy. The manufacturer had specifically developed the capability to measure the vehicle's battery system state-of-charge (SOC), including the Hymotion battery system. This potentially allows for measurement of the vehicle's real time use of fuel (gasoline) and electric power.

Figure 3. IOSiX OBD-II Data Logger

Vehicle Data from Nissan CARWINGS: A LEAF owner can acquire data from Nissan's CARWINGS telematics system. It sends and receives data from the vehicle through technology similar to mobile phones. It provides in-vehicle capabilities, such as mapping and location features, but of primary interest in this project are data and statistics than can be acquired via the Internet. The vehicle owner has a user name and password to access this system. Data is reported on a daily basis for each trip (recorded as power-on and power-off events). Included are date of trip, distance, total energy used, total energy from regenerative braking, net energy used, miles per kWh of energy used, and CO2 reductions (The latter is a separate calculation that utilizes a default grid emissions factor for the amount of electricity used). No detailed data are provided on time of trip (other than the date), average speed, or locational features. CARWINGS also creates various graphs of these data including cumulative trip/travel characteristics for monthly and annual reports. The daily travel data can be downloaded in a comma-separated (.csv) format for spreadsheet or database analysis with these data reported on a monthly basis (each file is specific to the month specified in the file name). The data are uploaded to CARWINGS server, which can take up the two days for data to be available from that system.

C. Data Gathering Process

GRIDbot Charging System: With only five vehicles using the charging stations, each charging event could be examined to initially identify and resolve any data problems or data definitions. Once any data issues were resolved, data were downloaded in an Excel workbook format weekly and monthly. Variables are described in detail below. During the first few weeks, charging system data were downloaded during a weekly visit to the GRIDbot stations to compare reported activity with observed activity (active charging by specific vehicles at specific charging ports). For analysis purposes, worksheets were sorted by Vehicle Identification Numbers (VIN) and the end time stamp. This sorted data by vehicle and charging event. Weekly site visits were also used to observe any possible unreported station outages.

GPS Data Loggers: During weekly visits to the charging stations, the data logger batteries were swapped for continued data gathering the following week. The data loggers were removed from the vehicle (driver side door pocket) and connected by a microUSB cable to a laptop. Qstarz Data Viewer software was used to download data to the laptop. The data were then saved to a .bin format, which can

be accessed by that software later to examine the data further. The data can be saved in other formats (.gpx, .nmea, .kml. and .csv) for different types of analysis or data display (for example, Google Earth or ArcGIS mapping of each trip).

OBD Port Data Logger: During weekly visits to the charging stations, the OBD data loggers were checked to confirm that the power light was on and then removed from the vehicle. The microSD card was removed from the logger and all data were copied from the card to a laptop computer. The data on the loggers are stored in folders by date (for example, NOV1). The data includes the VIN for each vehicle, and files were further labeled as Prius 83 or 84 to correspond with the vehicle being monitored. Data folders were left on the SDmicro card since there was ample space as well as providing an additional data backup. These data were later erased once data files from the laptop were backed up on HARC computers.

Nissan CARWINGS: Once the vehicles were signed up with Nissan's system, data was uploaded automatically from the vehicles to the CARWINGS site (if the driver's selected the dashboard OK to approve data collection). At the beginning of each month, data for each vehicle was downloaded for the previous month. This is a multi-step process that includes signing on to Nissan's owner site, selecting a vehicle, selecting launch CARWINGS, selecting driving history, selecting the reporting month, selecting electric rate simulation, and then downloading electricity usage records for that month. The .csv files were renamed to include vehicle identification (e.g., LEAF 44 Month) since the downloaded files do not include vehicle identification information. These data were added to a cumulative list of data in Excel files. A unique cumulative file was created for each month with a file name associated with the month last reported.

D. Details of Data Collection and Variables

Data were collected from the charging stations and vehicles. A reporting system was established with the GRIDbot servers allowing HARC to access measurements uploaded from the charging stations to the GRIDbot server. Three different technologies were used to gather data from the vehicles: GPS data loggers, an OBD port data logger for two Prius Hymotion vehicles, and data gathered as part of Nissan's reporting system to owners called CARWINGS.

Charging station data collection: HARC was given access to the GRIDbot data reporting system to access specified variables at any time. Charging data are reported in 15-minute increments. HARC accesses the GRIDBOT data via a SQL Server Linked Server connection. GRIDBOT provided HARC with a stored procedure that returns the raw data collected by GRIDBOTs charging stations. Each morning at 8 am a scheduled task executes the stored procedure to access the data for the previous day's charging events and the data is stored locally in a SQL Server 2008 Database. The scheduled tasks also analyze each charging event and caches data about each event to make reporting easier. HARC sees both the raw and processed data.

The data analyzed in this report is based on "charging events" that start when a vehicle user initiates charging for a vehicle with an RFID card keyed to that vehicle. The RFID card (GRIDkey) allows the user to access a charging port. The reported start time occurs when the GRIDkey is approved (not when electricity begins flowing to the vehicle). Once the vehicle is plugged in, the flow of electricity and other variables are reported in 30-minute increments. The example below illustrates the start time, end of time increment, and the cumulative amount of electricity used since the start of this charging event.

Table 1. Vehicle Charging Event
Example of 30 Minute Reporting

StartTimestamp	DataRcvdTimestamp	WattSecondsUsed
9/1/11 18:51	9/1/11 19:21	6322809
9/1/11 18:51	9/1/11 19:51	12696062
9/1/11 18:51	9/1/11 20:21	19068422
9/1/11 18:51	9/1/11 20:51	25433193
9/1/11 18:51	9/1/11 21:21	31799304
9/1/11 18:51	9/1/11 21:51	38172556
9/1/11 18:51	9/1/11 22:21	44563219
9/1/11 18:51	9/1/11 22:51	50967720
9/1/11 18:51	9/1/11 23:21	57359721
9/1/11 18:51	9/1/11 23:51	63755740

A charging event may end in two different ways: (1) if the vehicle is unplugged (UserCancel), or (2) if time expires after a specified period (TimeExpired). The expiration time was set at 72 hours for the purposes of this project. If at the time of viewing the server data there is an on-going charging event, it is reported as "InSession".

For each charging event increment, the system reports:

- Vehicle Identification Number (VIN) and City vehicle ID number
- Charging station ID (product #) and City assigned ID (number on charging post)
- Session ID: assigned when each charging event begins
- Port ID: either Level 1 (120 volts) or Level 2 (240 volts)
- Electric power variables
    - WattSecondsUsed: measure of electricity delivered to the vehicles in 30 minute reporting increments.
    - Average session line frequency in Hz: averaging approximately 60 Hz; extreme variations were considered to be a potential error indicator

Charging station data collection history and challenges: Data were initially received from GRIDbot starting in June 2011. Initial analysis continued through August 2011 to understand data definitions and improve the format by which data were collected. Initial problems included verification of variable definitions, such as time stamps, equipment ID numbers, and electricity consumption units. Initially VIN numbers were not reporting consistently. Data libraries were added to match VIN numbers with City vehicle ID numbers, and the assigned charging post numbers (initial installation of posts 1 to 14), with station ID numbers (product numbers from the manufacturer).

The charging events for Prius Hymotion vehicles and the Nissan LEAFs were significantly different, and these differences were identified for inclusion in how charging events were measured. The major difference identified is that the Prius Hymotion vehicles continue to draw a small amount of electricity after reaching full charge as long as they are plugged in. The purpose of this continued draw is to cool the battery system. The LEAFs reach their full charge, and then draw no additional power while they are plugged in. The changes in electricity use were defined in data collection as Phase 1 (primary charging) and Phase 2 (secondary charging). An algorithm was established for the LEAF and the Prius to estimate more precisely when Phase 1 ended and Phase 2 began.

Data reporting began once consistent and understandable charging events were identified along with confirmation of HARC's understanding of all data variables. The start of data reporting was established for September 1, 2011 as the initial start date of most of the charging data in this report.

Vehicle data collection: For most of the project period, two Nissan 2011 LEAFs and two Prius Hymotion vehicles were monitored. One additional Prius was monitored for charging data only. An additional 23 LEAFs (MY2012) were acquired by the City of Houston later in the project and the charging station data collection for these vehicles started in March 2012. However, these vehicles were not utilized to any great extent by the end of April 2012. Consequently charging and vehicle activity are minimal (other than initial charging).

Three vehicle data sources were used in the project: GPS data loggers, OBD ports data loggers, and Nissan's online data reporting, CARWINGS. GPS units were used in four vehicles (two LEAFs and two Prius) to track the amount, location, and time of travel. The Qstarz BT-Q1000XT data loggers were acquired in June 2012 for testing. The units needed to be self powered (batteries) and have sufficient on-time to last at least one week before replacing the batteries. The units also needed to automatically turn off to ensure battery life throughout the week. The Qstarz units have a vibration sensor that ensured that data logging began once the vehicle was driven. The data loggers were tested by HARC staff in their vehicles to determine if battery life was sufficient and how the start-up and shut down of the units functioned. Placement of the units within the vehicles was found to be important to data logging start-up. The units were placed in the driver side door to ensure that data logging began as soon as possible. The other challenge with the GRIDbot charging location was the fact that vehicles were parked underground. This meant that GPS units would not locate satellite signals until ground level was reached with the possibility of some delay even after reaching ground level. Testing of these units indicated that some trip starts would be delayed, but there was no way to eliminate this possibility with a GPS device.

OBD port data loggers are used to collect data that are directly reported to the on-board diagnostics (OBD) port. IOSiX data loggers were selected for the two Prius Hymotion vehicles. The IOSiX units had been used previously by the Texas Transportation Institute to collect data from other City of Houston Prius Hymotion vehicles. These units are powered by the vehicle (thus not requiring a separate battery) and were selected because the manufacturer had developed support programming for measuring charging of the Hymotion battery installed on these Prius. These data loggers store data to a microSD card (2 GB). Data were downloaded weekly from the OBD units at the same time as the GPS data were downloaded. The data loggers collect second-by-second data on trip characteristics such as time of day, speed, fuel use, engine RPM and other parameters reported by the vehicle to the OBD port. The units had many instances of missing data, but were useful as a potential way for identifying total energy use (gasoline and electricity), trip data, and battery state-of-charge.

Nissan created an on-line system that provides LEAF owners with the ability to download data on vehicle usage and energy use. Data that can be downloaded includes the date of each trip, trip length, energy economy (miles/kWh), electricity regenerated (by regenerative braking), and CO2 reductions. A "trip" begins when the vehicle is powered on and ends when the vehicle is powered off. A round trip would typically be reported as two trips (if the vehicle is powered off at the destination). One limitation to this method of data collection was the requirement that the driver concur (select OK) with uploading the data on the initial dashboard screen presented to the driver when the vehicle is started. If OK is not selected, the data for that trip is not reported/uploaded to the CARWINGS system. This procedure is the default setting on all Nissan LEAFs, and the owner cannot select automatic concurrence as the default.

There was an initial intent to include trip operating conditions as part of vehicle data. This includes examining vehicle operating conditions such as temperature, wind speed, rainfall, and types of roadways used. Due to the limited number of trips with the test vehicles, it was decided that there was not enough trip information to draw conclusions about vehicle or charging related activity. Ideally, energy use data would be collected over several seasons to examine the impact of seasonal variation (use of air conditioning and heaters, for example). GPS analysis provided an indication of trip locations that

occurred out of the downtown Tranquility Garage location. In addition, the types of roadways associated with these trips could be identified.

E. Data Overview

Charging System Data: The use of GRIDbot for charging is viewed as a series of "charging events". As mentioned above, a charging event begins when a charging station is accessed and ends when unplugged or timed out. Each event was analyzed to determine the average, minimum, and maximum values for several variables, including duration, electricity consumption, and maximum line frequency. Longer durations indicate more depleted battery systems (from prior vehicle use), and the amount of electricity consumption is a direct consequence. Maximum line frequency was identified as a potential indicator of a system problem (although it was not associated with any specific problem during the course of the project). Two other variables about the charging event are the time of day that charging began and the reason for the end of the charging session.

Time of day considerations are important to emissions and air quality issues since the use of electricity during peak periods affects how the electric power grid operates. Adding additional electricity demand during peak periods potentially adds to power plant emissions during the time when ozone formation is most likely to occur. In addition, the time of day indicates if a vehicle is likely to be sufficiently charged to return to service during the day. For example, a vehicle plugged in at 3:00 pm might not be suitable to place back into service for evening use. Additionally, charging of that vehicle could be delayed until late evening or early morning. In this project, no limits were place on when vehicles could begin a charging event.

The end of charging event variable can be helpful in decisions about deploying vehicles and estimating the vehicle's state-of-charge. At present, the vehicle does not report the battery state-of-charge to the charging station system (as is the case in all current vehicle charging technologies, the vehicle data systems and the charging station information systems do not share state-of-charge status). The LEAF's state-of-charge can be checked separately within CARWINGS. For example, prior to beginning a trip, SOC may be viewed on-line as well as on the dashboard display. As such, the fleet manager may need to check two different data systems to determine the vehicle's suitability for use by an additional driver. A charging session that reports that the vehicle timed out or that it is no longer drawing power would indicate that the vehicle is likely to be fully charged. If the charging data indicates the vehicle is "in session", the vehicle is not completely charged. The charging system does not know how much the vehicle was previously used, and as such, cannot estimate how much charging is needed. The charging system could combine the electricity consumption data with the end of session variable to determine if a vehicle is likely to be adequately charged for reassignment purposes. This would occur with a zero Wattseconds of power being drawn, and an InSession indication (or that the session timed out).

The way the charging system is used and vehicles deployed directly affects emissions reductions that result from the use of EVs and PHEVs. If frequently and efficiently deployed, higher emitting conventional fleet vehicles will be used less often. If managed efficiently, EVs can be fully charged during nighttime hours and meet typical fleet travel needs.

Vehicle Data: Trip data variables include the number of trips, distance, location, and electricity consumption reported by or from the vehicle. The number of trips was measured with two data sources: CARWINGS for the LEAFs and GPS data loggers for both the LEAFs and Prius. CARWINGS defines a "trip" as beginning when the vehicle is powered up (key on) and ending when the vehicle is powered down (key off). The GPS data loggers report continuously and may log travel from the time the data logger detects that the vehicle is in motion (or when it finds sufficient satellite signals) to the time it goes into a sleep mode to conserve the battery. It may log the equivalent of two or more trips compared with

CARWINGS. Trips recorded on GPS include the vehicle's movement (as indicated by location) and the length of time that the vehicle is not moving. Unlike trips reported by CARWINGs, the start and stop events are less precise and are determined by evaluating the length of time spent at rest. While counting trips with GPS is less precise than CARWINGS, it also reports distance, speed, time of day, and location variables as well measured.

Electricity consumption by the LEAF is reported to CARWINGS for each recorded trip, keeping in mind that the driver must select OK when the vehicle is first started and at each subsequent start. Electricity consumption could potentially be estimated on the Prius Hymotion vehicles from the IOSiX OBD data loggers, which reports on the battery state-of-charge over each trip. As mentioned, these units failed during their use on this project to consistently report these data.

F. Analysis

The use of electricity to power on-road vehicles incorporates consideration of emissions that might be associated with the vehicles (tailpipe emissions) and the fueling system (generation of electricity). As with gasoline and diesel, EVs cannot operate without a fueling infrastructure. The following sections examine activities and emissions associated with (1) EV charging infrastructure, and (2) vehicles.

EV fueling (charging) has greater flexibility in that it can occur primarily at a private charging station (at home or at restricted facilities such as workplace charging). Public charging facilities are also essential to ensure that vehicle users can refuel (though less frequently). Depending on operating characteristics, fleet EVs may charge at a central location. EVs at dispersed sites may charge at or near non-central locations. A large EV fleet within a major urban area, such as Houston, may have a central charging facility as well as charging locations of different sizes at suitable locations (or even home charging for employees who retain possession of the vehicle overnight. In the case of a city fleet, there may be charging stations at frequented locations such as community centers or libraries where vehicles can be charged opportunistically (short term charging while at a facility) with such charging being available to the public as well.

For emission reduction considerations, vehicles and charging stations are somewhat inseparable. As with conventional fuels, one technology enables the other. In the case of EVs, fueling infrastructure ensures that vehicles can operate with zero tailpipe emissions. This is particularly true in the case of PHEVs that can operate primarily in an electric mode. Without adequate charging facilities, such vehicles will rely on conventional fuels. If vehicles cannot be recharged in a timely fashion, emission levels (and energy use) could be no different than conventional vehicles. As such, vehicle charging infrastructure can enable zero tailpipe emissions for both EVs and PHEVs.

EV Charging Infrastructure Emission Factors

The primary consideration for vehicle emissions in modeling and policy making has been tailpipe exhaust that contributes directly to air quality and ozone formation. Specifically in consideration of EVs, emissions from the production of electricity is cited as an additional vehicle relevant consideration. As shown below, NOx emissions that might attributed to EVs and PHEVs can be calculated in various ways from reported data, expressed here as tons or pounds per kilowatt-hour (kWh) of electricity generated. Although this measure is available, it is not directly comparable with NOx emissions from gasoline and diesel production (for example, emissions from the refining process). This would require comparison of emissions throughout the life cycle of a fuel. Tailpipe emissions occur within a specific geographic area while emissions for power production are attributed to electricity sources across the power grid.

With the Texas electric power grid, NOx emissions can be represented by the service area of ERCOT, or for specific power plants located within a non-attainment or other geographic region. Point source emissions within an airshed are accounted for separately in air quality inventories and modeling for power plant emissions that might be used for vehicle charging, and for fuel refining and processing that might be used for conventional vehicles. As with electrons in the grid (and any associated emissions from their production), molecules of gasoline may have come from sources outside of an airshed, outside of the state, or even outside of the continental U.S. This is further compounded if the intent is to look not only at the production/refining component of fuels, but also exploration and distribution emissions, and other components of a fuel's life cycle. This has been part of the intent of the GREET model which has been developed to consider greenhouse gas emissions associated with transportation energy. Most of the published GREET reports focus on these emissions rather than urban airshed considerations of NOx (or other criteria emissions).

Three different data sources were identified as ways of estimating NOx emissions that could be roughly compared with vehicle emissions: EPA's Air Markets Program, EPA's eGRID, and the DOE's Energy Information Administration. These provide three different estimates of NOx emission rates per unit of energy generated. When converted to a grams/mile equivalent (Table 5), values range from a low of 0.01 g/mi, much lower than comparison vehicles, to a high value of 0.10 g/mi, higher than many vehicle emission standards.

EPA Air Markets Program: Data are available from the Air Markets Program that report NOx, CO2, and SO2 emissions for major power plants and generating facilities at those power plants. These data also identify the county in which these facilities are located. The following table reports the 2009 emissions from power plants located within the HGB nonattainment region and for the remainder of Texas.

Emissions from power plants per unit of electricity (per kWh) have declined dramatically over the last decade. In Texas, NOx emissions were 511 thousand metric tons in 2000 declining to 204 thousand metric tons in 2010, a decrease of 60%. Renewables (primarily wind) increased from 0.5% in 2000 to 6.7% in 2010. Meanwhile, (DOE/EIA-0348(01)/2, Released: January 27, 2012, State Electricity Profiles 2010, January 2012) electricity generation increased by approximately 9% during that same time period.

The resulting rates of pounds per kWh can be converted to grams per mile based on the energy consumption by the vehicles expressed in miles per kWh. These are reported values from the Nissan LEAF that were compiled from CARWINGs. These conversions are summarized in Table 5.

Table 2. Texas Power Plant Annual Emissions and Rates – 2009*

	HGB 8-county Non-Attainment Region		Remainder of Texas	
Emissions	**Tons**	**Pounds/kWh**	**Tons**	**Pounds/kWh**
NOx	5,167	0.000111	64,302	0.000383
Weighted Rate*		0.000113		0.000382
SO2	21,556	0.000461	178,510	0.001063
CO2	21,196,805	0.453779	94,920,908	0.565478
No. of Facilities	88		277	

*EPA Air Markets Program - http://ampd.epa.gov/ampd/
**Weighted average of annual NOx emission rates with MMBtu as weighting factor

eGRID: EPA's eGRID (Emissions & Generation Resource Integrated Database) is a data source for emissions from U.S. electric power generation facilities. Emissions data include nitrogen oxides, sulfur dioxide, carbon dioxide, methane, and nitrous oxide. eGRID provides emission rates, net generation, resource mix, and other features. The most recent reporting years are 2005 and 2007. Some electricity

generated is lost during transmission and distribution, estimated to be 6.18% in 2008 (U.S. EPA and the Energy Systems Laboratory (Texas A&M), Estimation of Annual Reductions of NOx Emissions in ERCOT for the HB3693 Electricity Savings Goal, December 2008, grid loss factor of 6.18%, p. 15). As such the rate of NOx emissions per unit of power would increase somewhat if expressed as the value at the charging station. Since the estimates in the AMPD and eGRID system report only emissions from generators with relevant emissions (i.e. natural gas and coal), such estimates do not include solar, wind, hydro, or nuclear. Inclusion of these sources would reduce NOx emission rates reported here.

Table 3. ERCOT Annual Emissions NOx and CO2
eGRID (2005 and 2007)*

			2005		2007	
Annual	**2005**	**2007**	**lbs/MWh**	**lbs/kWh**	**lbs/MWh**	**lbs/kWh**
Net Generation (MWh)	397,230,222	341,760,987				
CO2 Emissions (tons)	269,204,654	214,038,968	1,355.41	1.36	1,077.66	1.08
NOx Emissions (tons)	196,031	126,143	0.986991	0.0009867	0.738195	0.0007382

*http://www.epa.gov/cleanenergy/energy-resources/egrid/index.html

DOE EIA Texas Electricity Profile: The DOE also reports electricity production for the entire state of Texas by incorporating other parts of the U.S. grid that serve Texas. These are summarized below for 2010.

Table 4. Texas Electricity Profile 2010
DOE Energy Information Administration*

Annual (2010)	**2010**	**lbs/MWh**	**lbs/kWh**
Net Generation (MWhrs)	411,695,046		
CO2 Emissions (metric tons)	251,409,000	1,346.278724	1.35
NOx Emissions (metric tons)	204,000	1.092407	0.0010924

*Energy Information Administration, Form EIA-860, "Annual Electric Generator Report." Energy Information Administration, Form EIA-861, "Annual Electric Power Industry Report." Energy Information Administration, Form EIA-923, "Power Plant Operations Report" and predecessor forms. http://205.254.135.7/electricity/state/texas/ Texas Electricity Profile, 2010.

Wind Power Contract: The City of Houston has a wind power contract for an amount of electricity that meets 34% of the City's power consumption. If considered here in the context of grid power emissions, the NOx rate attributable to the City's use of electricity for these vehicles would be reduced proportionately (by 34%). While this wind purchase does not directly reduce emission rates, it indirectly affects the overall emissions from electric power grid by enabling expansion of wind generation as part of the grid-provided electricity. Use of renewable sources to charge electric vehicles regardless of whether or not they are direct or indirect is a logical scenario for considering emission reductions related to EVs and supporting infrastructure.

Summary of infrastructure considerations: Production emissions for electricity are discussed above with calculated NOx rates summarized in the table below. Rates range widely from 0.01 to a high value of 0.99 g/mi. It is notable that the HGB area power plants have a significantly lower emission rate than the remainder of the state, as reported in the EPA Air Markets Program. The eGRID values are higher than the Air Market Program, but are for an earlier time period (2007 vs. 2009). The emission rate from EIA was substantially higher than the other rates, but it was unclear why this rate was higher. Inclusion of the additional power plants outside of ERCOT would not seem sufficient to produce a value this much larger.

Table 5. Summary of Emission Factors from Texas Electric Power System

Source	Area/Reporting Year	NOx lbs/kWh	Grams/Mile*
EPA Air Markets Program, 2009	HGB/2009	0.000113	0.0103
	Remainder of State/2009	0.000382	0.0347
eGRID	ERCOT/2007	0.000738	0.0670
Texas Electricity Profile	Texas/2010	0.001092	0.0991
Average		**0.000581**	**0.0527**

*5 miles/kWh vehicle efficiency factor for Nissan LEAF. Based on 166 trips and 894 miles of travel reported from CARWINGS, September 2011 through April 2012. Average for all trips was 5.08 miles/kWh for the two test vehicles.

As mentioned, the grams/mile emission rate conversion is not directly comparable to tailpipe emission standards, particularly since estimated values vary by a factor of ten. However, the large decline in NOx emissions from Texas power plants from 2000 to 2010 by more than 60% is an indicator of the potential for further reductions that would affect transportation related emissions (DOE/EIA-0348(01)/2, Released: January 27, 2012 , State Electricity Profiles 2010, January 2012).

EV Charging Infrastructure Activity

The following summarizes charging activity at GRIDbot charging stations in Tranquility Garage from September 2011 through April 2012. Charging activities declined during December, January, and February due to decreased travel and use of vehicles. In March and April, the additional 23 Nissan LEAFs (MY2012) arrived as shown by increased charging activity during this period.

For the most part, each charging event accompanies a related set of vehicle trips: the vehicle has been charging since its previous use and unplugged for another use. The amount of charging is related to the trip or trips of the prior vehicle use.

The total amount of electricity used during this period was 477 kWh with the average charging event using 4.18 kWh. Discussions with City staff during the project indicated that some vehicle trips were not recorded to CARWINGS. During the study period, odometer readings for the two LEAFs totaled approximately 2,300 miles. Knowing the total number of miles traveled and total electricity use provided a secondary measure of average energy use by the vehicles. This value is 4.8 miles per kWh, within 5% of the average value reported to CARWINGS. Also, due to trip under-reporting, CARWINGS total electricity consumption during the study period was 184.8 kWh. The two measures of electricity which provide the greatest confidence are those from the vehicle (as reported to CARWINGS) and those reported by GRIDbot. Combining these measures suggests that approximately 40% of the total travel with the LEAFs was recorded to CARWINGS, i.e., under-reporting of about 60% of the trips.

Table 6. Summary of GRIDbot Charging Activity
September 2011 through April 2012
Five Vehicles: 2-2011 Nissan LEAFs EVs and 3-2009 Prius Hymotion PHEVs

Activity	Sep-Oct	Nov-11	Dec-11	Jan-12	Feb-12	Mar-12	Apr-12	Total
Total Electricity Used (kWh)	220.42	48.89	20.38	23.43	24.06	53.02	86.89	477.09
Avg per Charging Event (kWh)*	4.69	4.44	5.05	7.81	3.44	3.53	3.10	4.18
Avg Duration Phase 1 (Hours)*	1.9	3.6	5.1	2.2	1.3	1.6	1.0	2.0
Avg Time Plugged In Phase 1 & 2 (Hours)*	35.4	40.2	52.1	41.7	65.7	46.3	45.5	42.7
No. of Charging Events	53	21	8	7	8	15	45	157

*Weighted average

Vehicle Emissions and Reductions

The following sets forth considerations for estimating vehicle emissions for the test vehicles, including discussion of the LEAFs and a review of emission studies of the Prius with Hymotion battery systems.

The U.S. EPA has established light duty vehicle emissions standards that apply to tailpipe emissions as well as other types of vehicle emissions (for example, evaporative emissions). The standards include several pollutants: non-methane organic gases (hydrocarbons/VOCs), oxides of nitrogen (NOx), carbon monoxide (CO), particulate matter (PM), and formaldehyde (HCHO). Emissions of NOx are of particular concern due to the challenge of meeting ozone standards in Texas cities.

EV tailpipe emissions: Since vehicle emission standards are based on tailpipe emissions, EVs, such as the Nissan LEAF, are considered by EPA as having zero associated tailpipe emissions. The emission reductions are calculated in comparison with vehicles. Comparisons examined in this study include vehicles being replaced, similar conventionally powered vehicles, average vehicles in a broader population of vehicles (the HGB fleet, for example), or alternative power trains, such as HEVs.

PHEV Emissions/Prius Hymotion: Unlike an EV, a plug-in hybrid (PHEV), such as the Prius Hymotion or the Chevrolet Volt, has tailpipe emissions when the gasoline engine operates. Actual tailpipe emissions can vary from zero when operating in all electric mode, to higher levels when the gasoline engine is needed. A PHEV that operates at a zero emission level at varying times makes it difficult to establish a emission standard that is the equivalent of conventional ICE vehicles. For example, the EPA does not currently list a tailpipe emission standard for the Chevrolet Volt, but instead approved a Certificate of Conformity with the Clean Air Act specifying that the vehicle meets Tier 2, Bin 4 emission standards. Bin 4 has an emission standard of 0.04 grams/mile for NOx. California rated the Volt as an ultra-low emission vehicle (ULEV-II), which sets standard at 0.07 g/mi. The Volt is actually certified as ULEV-II when operating on gasoline, and a zero emission vehicle (ZEV) for electric mode operations. In practice, a Volt has the potential to operate at most times as a ZEV. The Prius in this project are not likely to operate in a battery only mode for a significant portion of travel.

Five studies were reviewed which sought to identify energy use and emissions of plug-in hybrid electric vehicles (PHEVs), which primarily focused on Prius Hymotion retrofits. The Prius Hymotion vehicles have a NOx tailpipe standard of 0.03 grams per mile (compared with 0.07 for comparably sized and age vehicles). As a retrofit, these vehicles were given an EPA waiver without an additional standard being assigned (the waiver limits the number of conversions). Several emissions testing projects have been conducted to estimate or measure fuel use and tailpipe emissions. These are summarized below.

- Frey, et. al. (Frey, H.C., H.W. Choi, E. Pritchard, and J. Lawrence, "In-Use Measurement of the Activity, Energy Use, and Emissions of a Plug-in Hybrid Electric Vehicle," Paper 2009-A-242-AWMA, Proceedings, 102nd Annual Conference and Exhibition, Air & Waste Management Association, Detroit, Michigan, June 16-19, 2009) demonstrated a methodology to characterize PHEVs including field measurements of a Prius Hymotion vehicle using portable emission measurement (PEM) equipment. They collected data on six different routes at speeds ranging from 21 to 41 miles per hour. Trip distances ranged from 16 to 41 miles. Fuel use on these trips ranged from 66.0 to 75.7 miles per gallon. Measured NOx tailpipe emissions ranged from 0.035 to 0.130 g/mi. The lowest emission rate occurred during the charge depleting (CD) part of driving (CD is the time the vehicle relies primarily on the vehicle's and Hymotion's battery systems). Electricity use during the CD mode was measured at 0.087 kWh/mile (11.49 miles/kWh).
- Carlson, et al (Carlson, R., Duoba, M., Bohn, T., and Vyas, A., Testing and Analysis of Three Plug-in Hybrid Electric Vehicles, 2007-01-0183, Argonne National Laboratory, from SAE 2007

World Congress presentation) used dynamometer testing to measure energy and emissions, distinguishing clearly between the CD and the charge sustaining (CS) modes. The CD mode is a single mode during which the vehicle relies primarily on the battery systems. Once the Hymotion batteries are depleted, the system reverts to the Prius system, and the Hymotion system is disabled. The tests were run over an urban drive cycle (UDDS). Electricity used for three cycles (approximately 25 miles) ranged from 0.0125 kWh/mile (80 miles/kWh) to 0.0128 kWh/mile. NOx emissions for the five tests ranged from approximately 0.009 g/mi to 0.016 g/mi. These were measured at the maximum depletion mode and are higher than those measured on the production Prius.

- Transportation Canada's ecoTECHNOLOGY (ecoTECHNOLOGY, Hymotion-Prius, Plug-In Hybrid Electric Vehicles (PHEV) Test Results Report, September 2010, Transport Canada) study of the Prius employed chassis dynamometer testing to measure energy use and emissions. They found that the Prius met Tier 2, Bin 5 NOx emission standards of 0.005 g/mi and was near meeting the Tier 2, Bin 2 standard as well (with the exception of NMHC). Fuel consumption, depending on mode operation, ranged from 1.9 to 3.5 L/100 km (67 to 119 mpg).
- Francfort, J. et al (Francfort, J, Carlson, R., Kirkpatrick, M., Shirk, M., Smart, J., and White, S., Plug-In Hybrid Electric Vehicle Fuel use Reporting Methods and Results, July 2009, Idaho National Laboratory, DOE) reported on testing conducted on 95 Prius Hymotion vehicles driven several hundred thousand miles in total. Fuel efficiency in the CD mode ranged from below 40 mpg to as high as 150 mpg. Roughly 60 to 65% of trips were above 60 mpg in the CD operating mode. In the accelerated testing (on-road driving), vehicles average 79.5 mpg. No emission tests were conducted as part of this study.
- Texas Transportation Institute (Texas Transportation Institute, Estimation of Emissions from Hybrid and Plug-In Hybrid Vehicles (draft for review), August 2011) tested two City of Houston Prius Hymotion vehicles, including fuel use and emissions. Emissions were measured with a PEM for six different trips ranging in length from 1.7 to 16.7 miles under different driving conditions. Energy use averaged 0.17 kWh/mi (5.88 miles/kWh). Fuel economy for both vehicles was generally lower than other studies, averaging 29.3 to 40.9 mpg. Fuel economy with the Hymotion batteries was substantially higher than with the HEV battery only. NOx emissions for the two vehicles were 0.048 and 0.053 g/mi compared with the HEV battery system alone with NOx emissions at 0.056 and 0.132, a 13% and 60% reduction. As noted in other studies, idling emissions can be higher for retrofitted PHEVs. This is attributed to the vehicle's emission treatment system (catalytic converter) failing to get hot enough to remove pollutants as quickly. There may also be multiple cold starts if the vehicle is operated at speeds and power requirements that allow the battery systems to provide the primary driving force. OEM emission systems for new PHEVs are designed to eliminate this problem.

Emission testing of the Prius Hymotion vehicles shows a wide range of results, with measurements both above and well below the OEM Prius NOx emission standard of 0.03 g/mi. The most comparable tests would be on a dynamometer with drive cycles that replicate those used to certify the vehicle. One basic question on emission rates is the comparison of rates versus gross emission amounts. In the case of a PHEV, the vehicle is capable of operating for some period of time and conditions that rely almost totally on electric power – zero tailpipe emissions. As mentioned, this is less true for the Prius Hymotion because the OEM Prius was designed to operate on all electric power only at relatively low speeds with low power demand. This is further confounded by whether or not the catalytic converter reaches a sufficiently high temperature to function as the engine turns on and off. If the vehicle operates in an all-electric mode (as would be true for the fully charged Chevy Volt during the first 30 to 40 miles), NOx emissions would be lower (total weight in grams). While the dynamics of vehicle emissions are more complex than this, PHEVs operating in an urban mode (low speed, low acceleration, stop-start conditions) can substantially reduce and at times eliminate vehicle tailpipe emissions.

Vehicle Emission Reductions: The following sets forth three different types of tailpipe emission comparisons for the City of Houston's use of EVs in its light duty fleet. These comparisons include: (1) emissions from vehicles being replaced, (2) similar new conventional light duty vehicles, (3) a DOE vehicle emissions calculator, and (4) MOBILE6 and MOVES emissions estimates.

Fleet vehicles being replaced: The City of Houston initially identified existing vehicles that were candidates for replacement with LEAFs. These vehicles have an average age of almost 14 years with odometer readings averaging almost 90,000 miles, or 6,500 miles per year. Newer vehicles are typically driven farther each year than older vehicles, including fleet use. The average for other light duty vehicles in the Houston fleet is roughly 8,000 miles per year, which will be used for emission comparison purposes. There is wide variation in how far vehicles are driven annually with candidate vehicles ranging from 2,185 miles per year to 14,893 miles per year. In addition to the odometer mileage, the decision to replace vehicles also includes recent maintenance costs, salvage value, and other vehicle conditions.

Table 7. Candidate Vehicles for Replacement with LEAFs

Make	Model	Age	Odometer	Miles/Year	NOx Standard g/mi
Ford	Freestar	5	23,609	4,722	0.04
Toyota	Prius	10	65,566	6,557	0.30
Toyota	Prius	10	53,669	5,367	0.30
Toyota	Prius	10	56,126	5,613	0.30
Dodge	Stratus Es	10	42,119	4,212	0.30
Chevrolet	Lumina	11	163,827	14,893	0.30
Ford	Taurus	11	34,668	3,152	0.30
Ford	Taurus	11	71,059	6,460	0.30
Dodge	Neon	11	60,122	5,466	0.30
Ford	Crown Vic	13	149,560	11,505	0.60
Ford	Crown Vic	13	200,488	15,422	0.60
Ford	Taurus	14	115,404	8,243	0.60
Dodge	Neon	14	34,179	2,441	0.60
Ford	Expedition	14	165,221	11,802	0.60
Ford	Taurus	15	116,686	7,779	0.60
Buick	Roadmaster	16	86,259	5,391	0.60
Ford	Taurus	16	62,277	3,892	0.60
Ford	Taurus	17	139,545	8,209	0.60
Ford	Taurus	17	79,482	4,675	0.60
Ford	Taurus	17	104,159	6,127	0.60
Chevrolet	Astro	17	101,952	5,997	0.60
Pontiac	Sunbird	18	39,329	2,185	0.60
Pontiac	Sunbird	18	48,437	2,691	0.60
Chevrolet	Lumina	19	123,466	6,498	0.60
Average		**13.6**	**89,050**	**6,536**	**0.48**
Nissan	**LEAF**			**8,000**	**0.00**
Annual NOx Emission Reduction per Vehicle			**8.46 lbs**		

The emission standard for the vehicles that are being replaced with EVs range from as low as 0.04 g/mi to 0.60 g/mi. The average of the comparison vehicles is 0.48 g/mi. It is likely that there is deterioration in the emission treatment systems that would result in higher emissions than the vehicle's NOx standard. However, there is no specific deterioration factor that could be applied to this set of vehicles to reflect this condition. Some of these vehicles may have deteriorated catalytic converters that don't meet emission standards but would not be placed on the road without correcting this condition. While some of these vehicles are likely "high emitters", this would need to be determined on a vehicle-by-vehicle basis.

Comparable age/size ICE and HEV vehicles: While the vehicles being replaced are the most accurate indicator of emission reductions that actually occur, another comparison is with new vehicles similar to the Nissan LEAF that might be acquired for fleet use (apart from decisions about energy and fuel, or vehicle cost, which were not included as a factor in identifying this set of comparison vehicles).

Table 8. 2012 Comparably Sized Vehicles: ICEs and HEVs*

Vehicle	Powertrain	Bin	NOx Standard g/mi
2012 Honda Accord Sedan	ICE	Bin 2	0.02
2012 Ford Focus	ICE	Bin 4	0.04
2012 Nissan Versa CVT	ICE	Bin 5	0.07
2012 Kia Optima Hybrid	HEV	Bin 2	0.02
2012 Honda Civic HYBRID	HEV	Bin 2	0.02
2012 Toyota Camry Hybrid	HEV	Bin 3	0.03
2012 Nissan LEAF	**EV**	**Bin 1**	**0.00**
Annual NOx Emission Reduction per Vehicle (0.03 g/mi)		**0.53 lbs**	

*ICE=Internal Combustion Engine. HEV=Hybrid Electric Vehicle

Table includes three small internal combustion engine (ICE) vehicles and three HEVs. The Nissan Versa is the most comparable in terms of body style since the LEAF uses the Versa's basic body design and common components. NOx emission standards range from as low as 0.02 to 0.07 g/mi. With the exception of the Versa, these vehicles have lower emission rates than the average new vehicle in the U.S. market. Using 0.03 g/mi as a comparison of these new vehicles, EVs would reduce annual NOx emissions per vehicle by 0.53 lbs.

DOE Vehicle Emissions Benefit Calculator: DOE developed an Excel spreadsheet calculator in 2009 (Argonne National Laboratory) to easily calculate criteria air pollutant emissions credits for the Alternative Fuel and Advanced Technology Vehicles Pilot Program (http://www.transportation.anl.gov/modeling_simulation/clean_cities_area_interest4.html). It was based on AirCRED model's methods using EPA's MOBILE6 for light duty vehicle and heavy duty engine certification data. It also generates data for vehicles that have not been certified and life cycle greenhouse gas emissions (well to wheel). Users can input the number of vehicles by fuel type, amount of travel per week, and number of days per week the vehicle is used. The NOx emissions credits (i.e., reductions) for the EV are estimated to be 12.0 lbs/year or 0.68 g/mi for the average annual mileage used in this comparison – 8,000 miles per year for the City of Houston light duty fleet. In the case of EVs with zero tailpipe emissions, the credit is equivalent to the emissions from a six-year old light duty vehicle as modeled in MOBILE6. The following table reports the results for EVs, HEVs, and PHEVs. The table includes NOx, VOCs, and CO2 emission reductions.

Figure 4. Clean Cities Emissions Benefit Tool Results

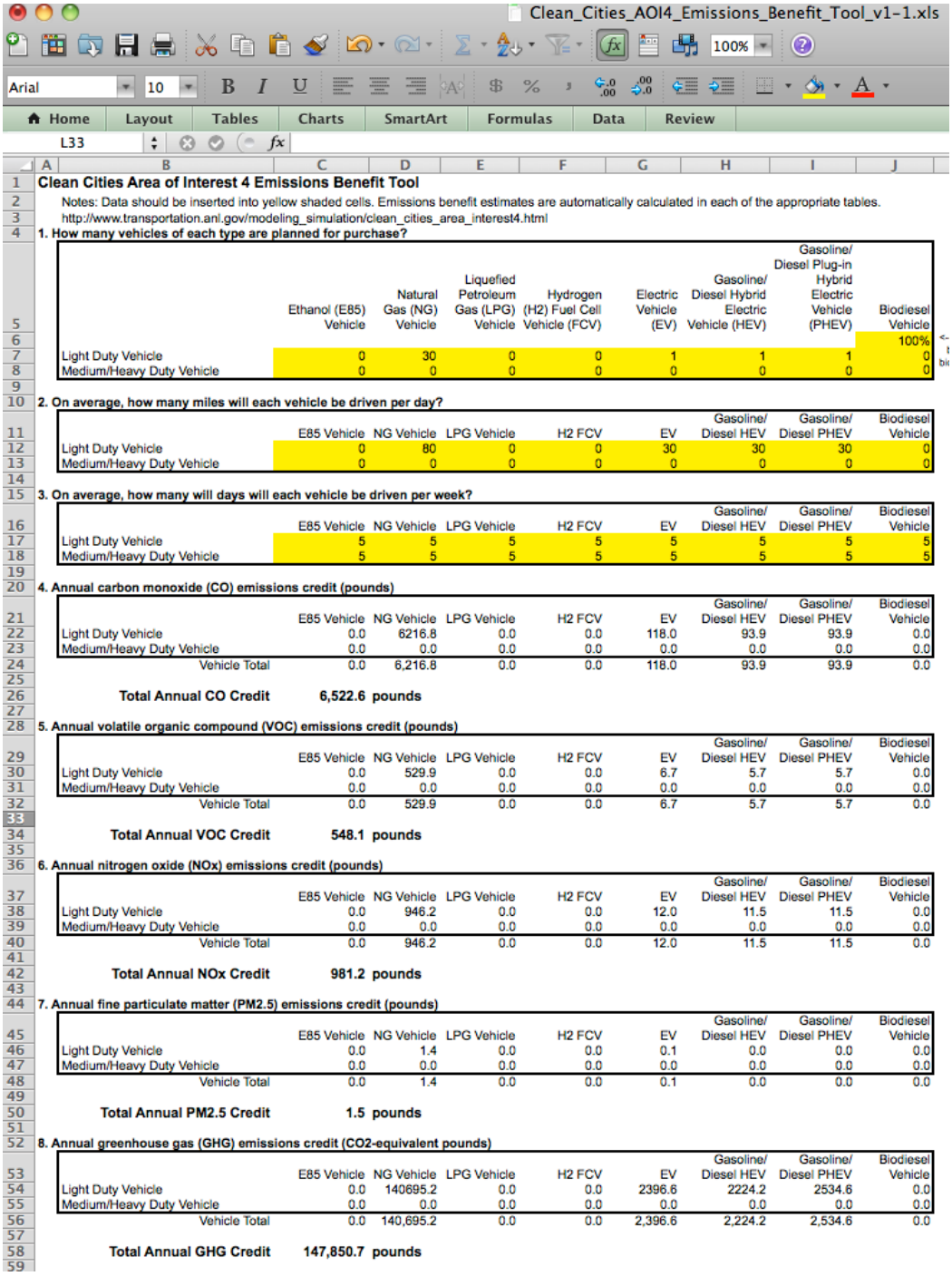

Clean_Cities_AOI4_Emissions_Benefit_Tool_v1-1.xls

Clean Cities Area of Interest 4 Emissions Benefit Tool

Notes: Data should be inserted into yellow shaded cells. Emissions benefit estimates are automatically calculated in each of the appropriate tables.
http://www.transportation.anl.gov/modeling_simulation/clean_cities_area_interest4.html

1. How many vehicles of each type are planned for purchase?

	Ethanol (E85) Vehicle	Natural Gas (NG) Vehicle	Liquefied Petroleum Gas (LPG) Vehicle	Hydrogen (H2) Fuel Cell Vehicle (FCV)	Electric Vehicle (EV)	Gasoline/ Diesel Hybrid Electric Vehicle (HEV)	Gasoline/ Diesel Plug-in Hybrid Electric Vehicle (PHEV)	Biodiesel Vehicle
								100%
Light Duty Vehicle	0	30	0	0	1	1	1	0
Medium/Heavy Duty Vehicle	0	0	0	0	0	0	0	0

2. On average, how many miles will each vehicle be driven per day?

	E85 Vehicle	NG Vehicle	LPG Vehicle	H2 FCV	EV	Gasoline/ Diesel HEV	Gasoline/ Diesel PHEV	Biodiesel Vehicle
Light Duty Vehicle	0	80	0	0	30	30	30	0
Medium/Heavy Duty Vehicle	0	0	0	0	0	0	0	0

3. On average, how many will days will each vehicle be driven per week?

	E85 Vehicle	NG Vehicle	LPG Vehicle	H2 FCV	EV	Gasoline/ Diesel HEV	Gasoline/ Diesel PHEV	Biodiesel Vehicle
Light Duty Vehicle	5	5	5	5	5	5	5	5
Medium/Heavy Duty Vehicle	5	5	5	5	5	5	5	5

4. Annual carbon monoxide (CO) emissions credit (pounds)

	E85 Vehicle	NG Vehicle	LPG Vehicle	H2 FCV	EV	Gasoline/ Diesel HEV	Gasoline/ Diesel PHEV	Biodiesel Vehicle
Light Duty Vehicle	0.0	6216.8	0.0	0.0	118.0	93.9	93.9	0.0
Medium/Heavy Duty Vehicle	0.0	0.0	0.0	0.0	0.0	0.0	0.0	0.0
Vehicle Total	0.0	6,216.8	0.0	0.0	118.0	93.9	93.9	0.0

Total Annual CO Credit 6,522.6 pounds

5. Annual volatile organic compound (VOC) emissions credit (pounds)

	E85 Vehicle	NG Vehicle	LPG Vehicle	H2 FCV	EV	Gasoline/ Diesel HEV	Gasoline/ Diesel PHEV	Biodiesel Vehicle
Light Duty Vehicle	0.0	529.9	0.0	0.0	6.7	5.7	5.7	0.0
Medium/Heavy Duty Vehicle	0.0	0.0	0.0	0.0	0.0	0.0	0.0	0.0
Vehicle Total	0.0	529.9	0.0	0.0	6.7	5.7	5.7	0.0

Total Annual VOC Credit 548.1 pounds

6. Annual nitrogen oxide (NOx) emissions credit (pounds)

	E85 Vehicle	NG Vehicle	LPG Vehicle	H2 FCV	EV	Gasoline/ Diesel HEV	Gasoline/ Diesel PHEV	Biodiesel Vehicle
Light Duty Vehicle	0.0	946.2	0.0	0.0	12.0	11.5	11.5	0.0
Medium/Heavy Duty Vehicle	0.0	0.0	0.0	0.0	0.0	0.0	0.0	0.0
Vehicle Total	0.0	946.2	0.0	0.0	12.0	11.5	11.5	0.0

Total Annual NOx Credit 981.2 pounds

7. Annual fine particulate matter (PM2.5) emissions credit (pounds)

	E85 Vehicle	NG Vehicle	LPG Vehicle	H2 FCV	EV	Gasoline/ Diesel HEV	Gasoline/ Diesel PHEV	Biodiesel Vehicle
Light Duty Vehicle	0.0	1.4	0.0	0.0	0.1	0.0	0.0	0.0
Medium/Heavy Duty Vehicle	0.0	0.0	0.0	0.0	0.0	0.0	0.0	0.0
Vehicle Total	0.0	1.4	0.0	0.0	0.1	0.0	0.0	0.0

Total Annual PM2.5 Credit 1.5 pounds

8. Annual greenhouse gas (GHG) emissions credit (CO2-equivalent pounds)

	E85 Vehicle	NG Vehicle	LPG Vehicle	H2 FCV	EV	Gasoline/ Diesel HEV	Gasoline/ Diesel PHEV	Biodiesel Vehicle
Light Duty Vehicle	0.0	140695.2	0.0	0.0	2396.6	2224.2	2534.6	0.0
Medium/Heavy Duty Vehicle	0.0	0.0	0.0	0.0	0.0	0.0	0.0	0.0
Vehicle Total	0.0	140,695.2	0.0	0.0	2,396.6	2,224.2	2,534.6	0.0

Total Annual GHG Credit 147,850.7 pounds

With this estimation tool, NOx reductions for EVs total 0.68 g/mi or 12.0 lbs per year. HEVs and PHEVs have slightly less emissions impact with 11.5 lbs per year for each vehicle type. The CO2 reduction illustrates differences in energy use by these different power trains. The CO2 reductions attributed to the EV and PHEV include those estimated from power plant emissions (based on the national mix of power

plant emissions). Estimates for HEVs also include assumptions about the technologies and drive cycles for these types of vehicles.

Table 9. Clean Cities Area of Interest 4 Emissions Benefit Tool
Light Duty Vehicle Total Annual Emissions Credit (lbs)*

Criteria Emissions	Electric Vehicle (EV)	Gasoline/Diesel Hybrid Electric (HEV)	Gasoline/Diesel Plug-in Hybrid Electric Vehicle (PHEV)
NOx (lbs) **g/mi**	**12.0** **0.68**	11.5	11.5
VOC (lbs)	6.7	5.7	5.7
CO2 equivalent (lbs)	2,396.6	2,224.2	2,534.6

*based on an average of 8,000 miles/year for City of Houston LDVs.

MOVES and MOBILE6 fleet emission factors: Transportation air quality modeling includes emissions inventories for different types of vehicles and incorporates factors that reflect fleet emission characteristics. MOVES is a modeling system that estimates emissions from mobile sources. It is intended to replace the previous system, MOBILE6. The MOVES model estimates various on-road emissions from light duty cars and trucks, and larger trucks and vehicles. Estimates are based on vehicle emissions standards of specific vehicle types, but the models incorporate characteristics of the vehicles that are using the transportation network (for example, from state vehicle registration data). Results of modeling for the Houston-Galveston-Brazoria (HGB) nonattainment region by TCEQ compare the overall results of these two different models (Table 10). The emissions factors converted to grams per mile for NOx are 0.66 in MOBILE6 and 1.04 for MOVES. Modeling was also conducted to project emissions to the year 2018. NOx emissions decreased to 0.17 and 0.28 for MOBILE6 and MOVES respectively. The 2018 MOVES estimates illustrate the impact of emissions standards that substantially reduce NOx emissions, dropping from 1.04 g/mi in 2006 to 0.28 g/mi in 2018.

The overall vehicle NOx emission rate for MOVES is 40% higher than MOBILE6. These fleet wide rates are also substantially higher than the vehicle emission standards for newer vehicles described above, reflecting the age of the average vehicle in use in the overall vehicle population.

Table 10. MOBILE6 and MOVES Emissions Inventories and Vehicle Miles Traveled (VMT) HGB*

	VMT Daily (vehicle miles traveled)	**NOx tpd** (tons per day)	**VOC tpd** (tons per day)	**CO tpd** (tons per day)	**NOx g/mi** (grams per mile)	**VOC g/mi** (grams per mile)	**CO g/mi** (grams per mile)
MOBILE6 2006							
Light-Duty	121,830,352	88.96	84.89	1,074.55	0.66	0.63	8.00
Heavy-Duty	12,038,309	117.78	5.82	40.72	8.88	0.44	3.07
Total Fleet	133,868,661	206.74	90.71	1,115.28	1.40	0.61	7.56
MOVES 2006							
Light-Duty	120,177,940	137.95	93.66	901.46	1.04	0.71	6.71
Heavy-Duty	13,690,721	154.71	13.91	111.76	10.25	0.92	7.41
Total Fleet	133,868,661	292.65	107.57	1,013.21	1.98	0.73	6.87
MOVES 2018							
Light-Duty	162,564,729	49.71	40.12	550.02	0.28	0.22	4.10
Heavy-Duty	18,428,358	59.36	7.98	67.78	2.92	0.39	3.34
Total Fleet	180,993,087	109.07	48.1	617.79	0.55	0.24	3.10

* Preliminary Comparison Between MOVES and MOBILE6, Houston/Galveston/Brazoria (HGB) On-Road Emission Inventories for 2006 and 2018, Texas Commission on Environmental Quality, Air Modeling and Data Analysis Section, Presentation to the Southeast Texas Photochemical Modeling Technical Committee, February 2011.

Vehicle Activity

Vehicle travel on the four primary study vehicles was monitored with GPS and OBD port data loggers. In addition, travel data was reported from the two EVs to the Nissan CARWINGS system.

GPS data loggers: GPS trip data was logged on the four test vehicles: Nissan LEAFs 43 and 44, and Prius Hymotion's 83 and 84. The periods of time ranged from 31 days (Prius 83) to 108 calendar days (LEAF 44). Some data were not available due to conditions such as GPS failure to gain satellite signals or battery life on the data loggers. In total, there were 105 GPS "events" (periods during which vehicle movement was logged) for an estimated 160 vehicle trips traveling over 1,368 miles.

Trip distances were measured in two ways: number of GPS events and the trip length. GPS trip distances were determined by mapping each GPS event (Google Earth). A "GPS event" consists of all travel that occurs while the GPS unit is active. The event starts when the data logger captures adequate satellite signals and ends when the vehicle loses that signal. A vehicle trip is the distance between an identified origin and destination. For these fleet vehicles, destinations typically included parks, community centers, the city garage, and other city owned facilities. During a GPS event, vehicles travel to a destination, stop for several minutes or hours, and return at some point to the initial start point (Tranquility Garage). Many observed GPS events contained trips in which the travel out and back were paired. Each of these events was counted as one vehicle trip. In other GPS events, a trip consists of multiple stops. Each GPS event was examined to estimate the number of vehicle trips for that event. For example, a GPS event that begins at Tranquility Garage, travels to a city park, and then returns downtown is counted as two vehicle trips. If there are identifiable multiple stops, each of these is counted as a vehicle trip. Using this approach, a total of 160 vehicle trips during the October to February time frame were identified, averaging 9.38 miles per trip. Notable for the purposes of this analysis is the difference between the Prius Hymotion vehicles and the Nissan LEAFs. The average distance for the LEAFs is roughly one half (48%) that of the Prius.

Table 11. Summary of GPS Events and Trip Characteristics
Data Collected From October 2011 to February 2012

Vehicle	Total GPS Events	Estimated Total Trips	Estimated Trips/Day*	Total Distance (mi)	Average Trip Distance (mi)**	Min Event Distance (GPS-mi)	Max Event Distance (GPS-mi)	No. of Trip Days	No. of Calendar Days
Prius 83	20	32	2.29	371.2	11.60	0.30	52.40	14	31
Prius 84	41	67	2.68	677.8	10.12	1.19	52.50	25	64
LEAF 43	17	20	2.50	107.4	5.37	2.94	27.80	8	66
LEAF 44	27	41	2.93	212.1	5.17	1.10	28.40	14	108
Total	**105**	**160**	**2.62**	**1,368.4**	**9.38**	**1.10**	**52.50**	**61**	

*Trips/Day count only days on which trips were made, not including days when there were no reported trips.
**Total Avg. Trip Distance is weighted by total distance for each vehicle

Nissan LEAF CARWINGS: Trip reporting on the Nissan LEAF relies on users to select the OK button displayed on the vehicle center dashboard. Selecting OK allows data to be uploaded to CARWINGS. If the OK selection is not made, trip data are not uploaded. This default condition could not be changed, and consequently, it was expected that the number of trips would be under reported. However, trips that are reported are well defined in terms of the start (key-on position) and stop points (key-off position). Comparisons are difficult between the CARWINGS data and the GPS data since they measure trips and times differently (see GPS discussion of "events" vs. trips). For example, for one trip period Nissan LEAF 43 had five reported trips while the GPS unit reported four. For this particular set of trips, they were repetitive (over similar routes) to the same site, and were roughly equal in length, averaging 4.64 miles on GPS and 4.56 miles on CARWINGS. Due to the disparate methods available to measure vehicle travel (GPS, OBD, and CARWINGS), there was no intent to make trip-by-trip comparisons, but to rely on overall measures as indicators of travel activity.

Table 12. Summary CARWINGS Trip Characteristics
Data From September 2011 to April 2012

CARWINGS Data	Sep-Oct-11	Nov-11	Dec-11	Jan-12	Feb-12	Mar-12	Apr-12	Total
Recorded No. of Trips	53	39	12	14	7	19	22	166
Avg Trip Length (miles)	5.90	4.80	2.63	2.16	5.51	3.87	9.78	5.18
Total Distance (miles)	319.0	185.9	31.6	30.2	38.6	73.5	215.1	893.9
Miles/kWh (weighted by trip length)	4.94	4.98	4.85	4.23	5.41	5.29	5.34	5.08
Total Electricity Used (kWh)	62.2	39.8	10.1	10.6	7.3	16.7	38.1	184.8

Although there was under reporting of trips to CARWINGS, there were 166 trips recorded for an eight-month period (21 trips/month) while GPS reported only 61 trips for the two LEAFs over a five-month period (12 trips/month). Total travel amounted to 894 miles with vehicles reporting less use from December 2011 through February 2012. Odometer readings, which totaled about 2,000 miles of travel, suggest that roughly 40% of vehicle trips were reported via CARWINGS.

The key variables for this project related to emission considerations include average trip length, vehicle efficiency (miles/kWh), and total electricity use (kWh).

The relationship between trip length and vehicle energy efficiency was observed during the study, with longer trips appearing to be somewhat more efficient than shorter trips, as shown in the figure below (log trend). Particularly with EVs, vehicle efficiency can vary widely from driver to driver (for example, aggressive driving depletes batteries more quickly) and over different kinds of trips (local road vs highways, for example). Vehicle efficiency (miles/kWh) varied from rates as low as 2 mi/kWh to high rates of almost 9 mi/kWh. This difference is noticeably greater that what occurs with conventional ICE vehicles in which vehicle efficiencies (mpg) vary across a much smaller range. A vehicle getting 25 mpg might range from 20 to 30 mpg, but would not range by a factor of 3 (for example, 15 to 45 mpg). The average efficiency at 5.08 mi/kWh falls within efficiency ranges generally reported in EV literature (varying from 3 to 6 mi/kWh).

Figure 5. Trip-by-Trip Energy Efficiency and Trip Length
Nissan LEAFs 43 and 44: Sep 2011 to Apr 2012

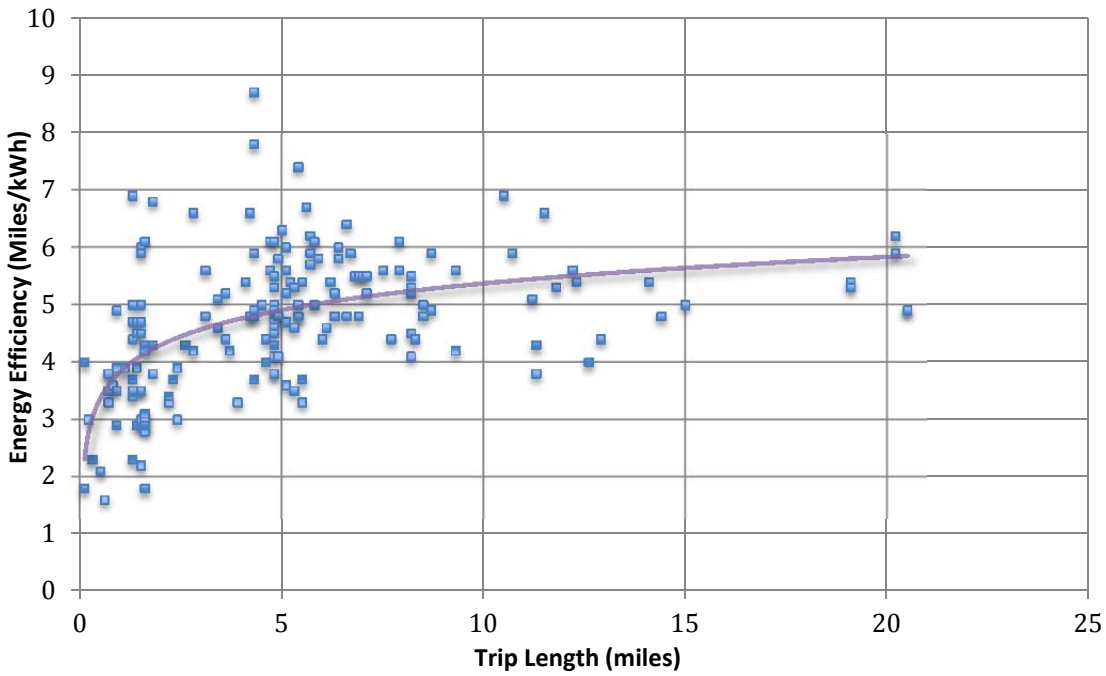

OBD IOSiX Data Logger: The IOSiX OBD data loggers record trips from the time the vehicle is started to when the vehicle is switched off (key-on/key-off). This method of counting trips is similar to vehicle trips recorded by CARWINGS. Problems with data from the IOSiX units prevented their use for energy calculations, but they did provide trip data for one of the vehicles.

A set of trips for the Prius 83 was evaluated for variables including speed, trip length, trip start and end times, and fuel efficiency (MPG). The OBD data loggers failed to consistently report the Hymotion battery system state-of-charge, and these data were not usable for either Prius 83 or 84. The following table summarizes OBD data from Prius 83 from October 24, 2011 to November 29, 2011. The average trip length recorded with the IOSiX equipment was 7.53 miles, compared with 10.86 miles recorded with GPS data loggers. This might suggest that the number of trips were undercounted for the GPS equipment since they did not measure key-on/key-off for each trip. The number of trips per trip day was 4.84 or roughly two round-trips per day that the vehicle was used. This is more than twice as many trips as were estimated by mapping the GPS data.

Table 13. Summary IOSiX Data for Prius 83 Trips

Trip Measures	Results
Average Trip Time (minutes)	16.43
Average Trip Length(miles)	7.53
Total Miles	474.5
Average Speed (MPH)	23.94
Average Fuel Use (MPG)	43.03
Total Number of Trips	63
Number of Trip Days	13
Trips/Trip Day	4.84

Fuel efficiency as measured by these units was also lower than expected at 43 mpg, although these results are similar to data measured in TTI's study using this same OBD data logger.

As with the LEAFS, fuel efficiency increased with longer trips, as indicated in the following figure. However, it is uncertain if the reported fuel efficiency with the data logger incorporates the Hymotion battery system's role in fuel efficiency. Several studies report substantially higher fuel efficiencies. The data reported here are more consistent with those reported in the TTI study, which also relied on the IOSiX data logger. The data logger uses second-by-second fuel consumption to measure fuel efficiencies.

Figure 6. Fuel Use by Trip Length
Prius 83 Recorded Trips (63) October 24 to November 29, 2011

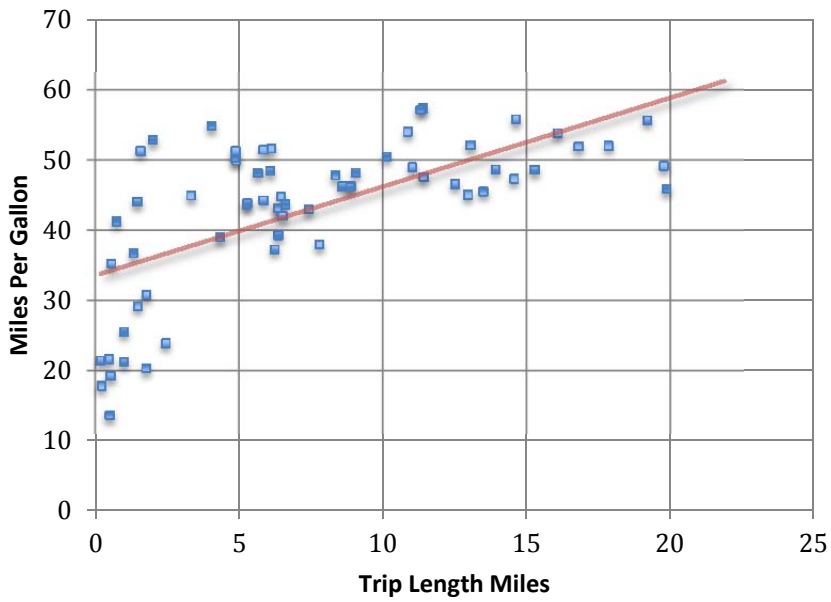

In the Texas Transportation Institute's study of City of Houston Prius Hymotion vehicles, the state-of-charge changed by 3.3% per mile on trips ranging from 1.7 to 16.7 miles (six test trips). These measurements used the IOSiX OBD data logger and trips were measured on both city and city/highway routes. The percent SOC change varied from 10% to 58.5% over the entire trip. The amount of electricity consumed averaged 0.17 kWh per mile (5.88 miles/kWh). Other studies mentioned above report higher efficiency rates (11.49 mi/kWh and 80 mi/kWh in CD mode).

Summary of Findings

Using various vehicle scenarios, the largest NOx emission reductions identified are in comparison with the older, high emitting vehicles being replaced (Table 7), and with the average for the HGB region's light duty vehicle population (Table 10). Since tailpipe emissions from the Nissan LEAFs are zero, the percent emission reduction is 100 percent. For air quality considerations, the emission factor reductions are 0.48 grams/mile for fleet vehicles being replaced, and 1.04 grams/mile for the 2006 HGB light duty fleet average. Projecting to 2018, today's LEAFs would reduce NOx emissions by 0.28 grams/mile.

Estimates of emission factors from the Texas electric power grid range widely by a factor of ten, from as little as 0.10 grams/mile to as high as 0.099 grams/mile. The former is lower than any of today's non-EV vehicles and the latter is higher than emission standards for conventional gasoline vehicles. These estimates are not comparable to tailpipe emissions since they do not account for the full life cycle emissions of both electricity and gasoline/diesel fuels. Fuel related emissions, whether from electricity or gasoline/diesel production, are accounted for separately in air quality modeling, primarily as point source emissions.

Appendix

- Example Worksheets from GRIDbot Server
- Examples of Nissan CARWINGS Displays for LEAFs 43 and 44
- Example of GPS Trips Map

Example Worksheets from GRIDbot Server
Raw Data Worksheet for Each 30-Minute Increment

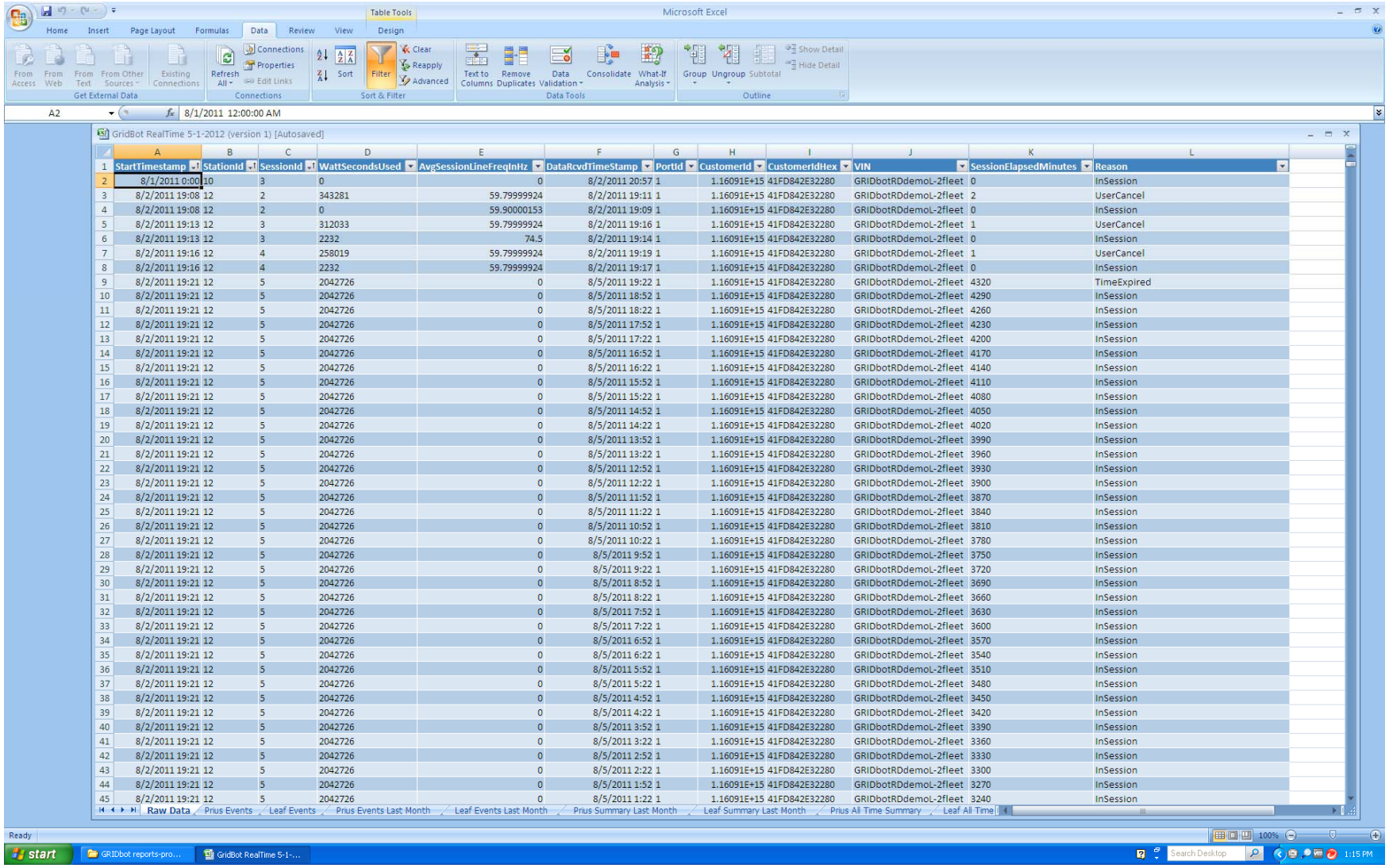

GridBot RealTime 5-1-2012 (version 1) [Autosaved]

	A	B	C	D	E	F	G	H	I	J	K	L
1	StartTimestamp	StationId	SessionId	WattSecondsUsed	AvgSessionLineFreqInHz	DataRcvdTimeStamp	PortId	CustomerId	CustomerIdHex	VIN	SessionElapsedMinutes	Reason
2	8/1/2011 0:00	10	3	0	0	8/2/2011 20:57	1	1.16091E+15	41FD842E32280	GRIDbotRDdemoL-2fleet	0	InSession
3	8/2/2011 19:08	12	2	343281	59.79999924	8/2/2011 19:11	1	1.16091E+15	41FD842E32280	GRIDbotRDdemoL-2fleet	2	UserCancel
4	8/2/2011 19:08	12	2	0	59.90000153	8/2/2011 19:09	1	1.16091E+15	41FD842E32280	GRIDbotRDdemoL-2fleet	0	InSession
5	8/2/2011 19:13	12	3	312033	59.79999924	8/2/2011 19:16	1	1.16091E+15	41FD842E32280	GRIDbotRDdemoL-2fleet	1	UserCancel
6	8/2/2011 19:13	12	3	2232	74.5	8/2/2011 19:14	1	1.16091E+15	41FD842E32280	GRIDbotRDdemoL-2fleet	0	InSession
7	8/2/2011 19:16	12	4	258019	59.79999924	8/2/2011 19:19	1	1.16091E+15	41FD842E32280	GRIDbotRDdemoL-2fleet	1	UserCancel
8	8/2/2011 19:16	12	4	2232	59.79999924	8/2/2011 19:17	1	1.16091E+15	41FD842E32280	GRIDbotRDdemoL-2fleet	0	InSession
9	8/2/2011 19:21	12	5	2042726	0	8/5/2011 19:22	1	1.16091E+15	41FD842E32280	GRIDbotRDdemoL-2fleet	4320	TimeExpired
10	8/2/2011 19:21	12	5	2042726	0	8/5/2011 18:52	1	1.16091E+15	41FD842E32280	GRIDbotRDdemoL-2fleet	4290	InSession
11	8/2/2011 19:21	12	5	2042726	0	8/5/2011 18:22	1	1.16091E+15	41FD842E32280	GRIDbotRDdemoL-2fleet	4260	InSession
12	8/2/2011 19:21	12	5	2042726	0	8/5/2011 17:52	1	1.16091E+15	41FD842E32280	GRIDbotRDdemoL-2fleet	4230	InSession
13	8/2/2011 19:21	12	5	2042726	0	8/5/2011 17:22	1	1.16091E+15	41FD842E32280	GRIDbotRDdemoL-2fleet	4200	InSession
14	8/2/2011 19:21	12	5	2042726	0	8/5/2011 16:52	1	1.16091E+15	41FD842E32280	GRIDbotRDdemoL-2fleet	4170	InSession
15	8/2/2011 19:21	12	5	2042726	0	8/5/2011 16:22	1	1.16091E+15	41FD842E32280	GRIDbotRDdemoL-2fleet	4140	InSession
16	8/2/2011 19:21	12	5	2042726	0	8/5/2011 15:52	1	1.16091E+15	41FD842E32280	GRIDbotRDdemoL-2fleet	4110	InSession
17	8/2/2011 19:21	12	5	2042726	0	8/5/2011 15:22	1	1.16091E+15	41FD842E32280	GRIDbotRDdemoL-2fleet	4080	InSession
18	8/2/2011 19:21	12	5	2042726	0	8/5/2011 14:52	1	1.16091E+15	41FD842E32280	GRIDbotRDdemoL-2fleet	4050	InSession
19	8/2/2011 19:21	12	5	2042726	0	8/5/2011 14:22	1	1.16091E+15	41FD842E32280	GRIDbotRDdemoL-2fleet	4020	InSession
20	8/2/2011 19:21	12	5	2042726	0	8/5/2011 13:52	1	1.16091E+15	41FD842E32280	GRIDbotRDdemoL-2fleet	3990	InSession
21	8/2/2011 19:21	12	5	2042726	0	8/5/2011 13:22	1	1.16091E+15	41FD842E32280	GRIDbotRDdemoL-2fleet	3960	InSession
22	8/2/2011 19:21	12	5	2042726	0	8/5/2011 12:52	1	1.16091E+15	41FD842E32280	GRIDbotRDdemoL-2fleet	3930	InSession
23	8/2/2011 19:21	12	5	2042726	0	8/5/2011 12:22	1	1.16091E+15	41FD842E32280	GRIDbotRDdemoL-2fleet	3900	InSession
24	8/2/2011 19:21	12	5	2042726	0	8/5/2011 11:52	1	1.16091E+15	41FD842E32280	GRIDbotRDdemoL-2fleet	3870	InSession
25	8/2/2011 19:21	12	5	2042726	0	8/5/2011 11:22	1	1.16091E+15	41FD842E32280	GRIDbotRDdemoL-2fleet	3840	InSession
26	8/2/2011 19:21	12	5	2042726	0	8/5/2011 10:52	1	1.16091E+15	41FD842E32280	GRIDbotRDdemoL-2fleet	3810	InSession
27	8/2/2011 19:21	12	5	2042726	0	8/5/2011 10:22	1	1.16091E+15	41FD842E32280	GRIDbotRDdemoL-2fleet	3780	InSession
28	8/2/2011 19:21	12	5	2042726	0	8/5/2011 9:52	1	1.16091E+15	41FD842E32280	GRIDbotRDdemoL-2fleet	3750	InSession
29	8/2/2011 19:21	12	5	2042726	0	8/5/2011 9:22	1	1.16091E+15	41FD842E32280	GRIDbotRDdemoL-2fleet	3720	InSession
30	8/2/2011 19:21	12	5	2042726	0	8/5/2011 8:52	1	1.16091E+15	41FD842E32280	GRIDbotRDdemoL-2fleet	3690	InSession
31	8/2/2011 19:21	12	5	2042726	0	8/5/2011 8:22	1	1.16091E+15	41FD842E32280	GRIDbotRDdemoL-2fleet	3660	InSession
32	8/2/2011 19:21	12	5	2042726	0	8/5/2011 7:52	1	1.16091E+15	41FD842E32280	GRIDbotRDdemoL-2fleet	3630	InSession
33	8/2/2011 19:21	12	5	2042726	0	8/5/2011 7:22	1	1.16091E+15	41FD842E32280	GRIDbotRDdemoL-2fleet	3600	InSession
34	8/2/2011 19:21	12	5	2042726	0	8/5/2011 6:52	1	1.16091E+15	41FD842E32280	GRIDbotRDdemoL-2fleet	3570	InSession
35	8/2/2011 19:21	12	5	2042726	0	8/5/2011 6:22	1	1.16091E+15	41FD842E32280	GRIDbotRDdemoL-2fleet	3540	InSession
36	8/2/2011 19:21	12	5	2042726	0	8/5/2011 5:52	1	1.16091E+15	41FD842E32280	GRIDbotRDdemoL-2fleet	3510	InSession
37	8/2/2011 19:21	12	5	2042726	0	8/5/2011 5:22	1	1.16091E+15	41FD842E32280	GRIDbotRDdemoL-2fleet	3480	InSession
38	8/2/2011 19:21	12	5	2042726	0	8/5/2011 4:52	1	1.16091E+15	41FD842E32280	GRIDbotRDdemoL-2fleet	3450	InSession
39	8/2/2011 19:21	12	5	2042726	0	8/5/2011 4:22	1	1.16091E+15	41FD842E32280	GRIDbotRDdemoL-2fleet	3420	InSession
40	8/2/2011 19:21	12	5	2042726	0	8/5/2011 3:52	1	1.16091E+15	41FD842E32280	GRIDbotRDdemoL-2fleet	3390	InSession
41	8/2/2011 19:21	12	5	2042726	0	8/5/2011 3:22	1	1.16091E+15	41FD842E32280	GRIDbotRDdemoL-2fleet	3360	InSession
42	8/2/2011 19:21	12	5	2042726	0	8/5/2011 2:52	1	1.16091E+15	41FD842E32280	GRIDbotRDdemoL-2fleet	3330	InSession
43	8/2/2011 19:21	12	5	2042726	0	8/5/2011 2:22	1	1.16091E+15	41FD842E32280	GRIDbotRDdemoL-2fleet	3300	InSession
44	8/2/2011 19:21	12	5	2042726	0	8/5/2011 1:52	1	1.16091E+15	41FD842E32280	GRIDbotRDdemoL-2fleet	3270	InSession
45	8/2/2011 19:21	12	5	2042726	0	8/5/2011 1:22	1	1.16091E+15	41FD842E32280	GRIDbotRDdemoL-2fleet	3240	InSession

Raw Data | Prius Events | Leaf Events | Prius Events Last Month | Leaf Events Last Month | Prius Summary Last Month | Leaf Summary Last Month | Prius All Time Summary | Leaf All Time

Example Worksheet from GRIDbot Server
LEAF Charging Events from Previous Month

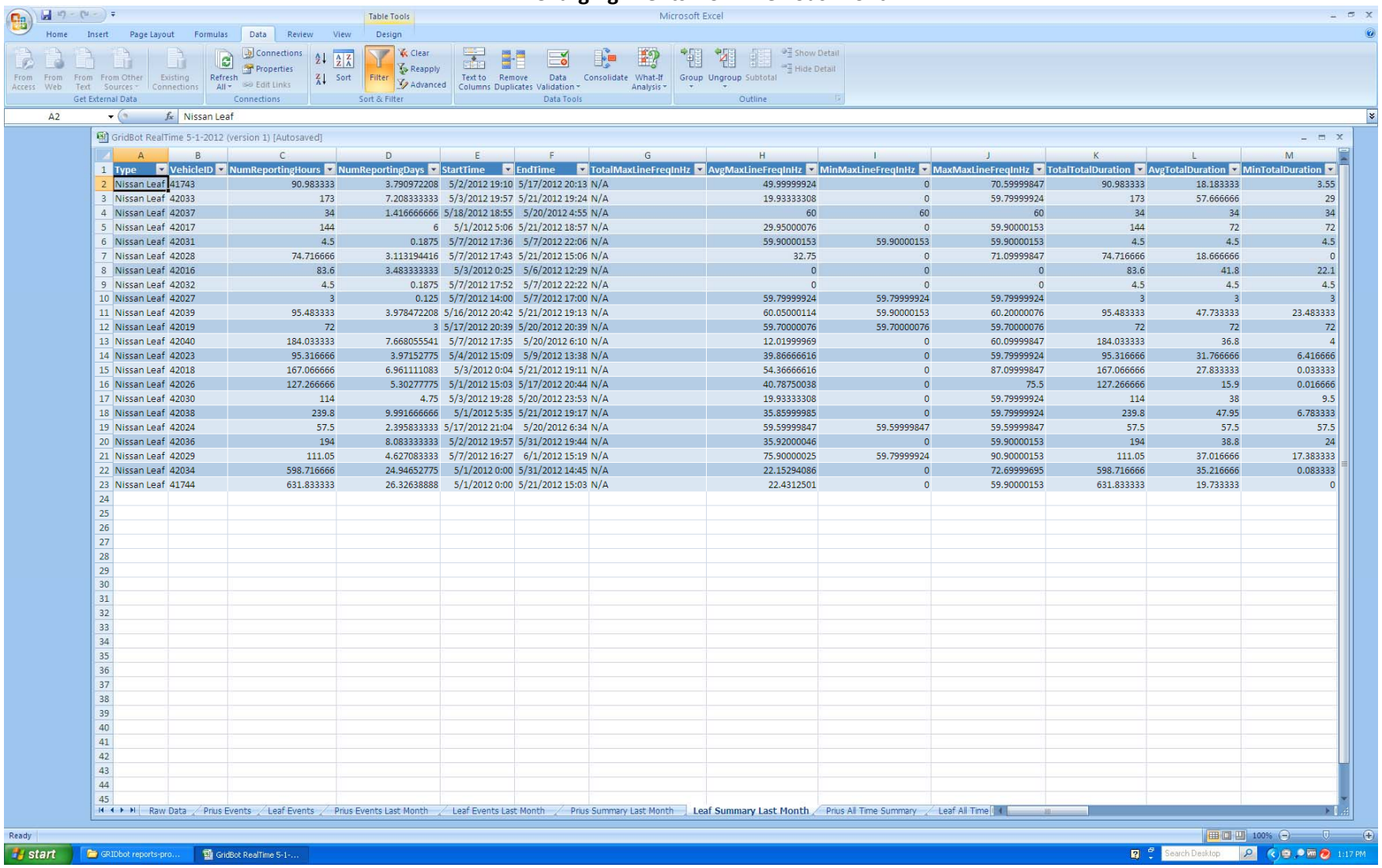

Type	VehicleID	NumReportingHours	NumReportingDays	StartTime	EndTime	TotalMaxLineFreqInHz	AvgMaxLineFreqInHz	MinMaxLineFreqInHz	MaxMaxLineFreqInHz	TotalTotalDuration	AvgTotalDuration	MinTotalDuration
Nissan Leaf	41743	90.983333	3.790972208	5/2/2012 19:10	5/17/2012 20:13	N/A	49.99999924	0	70.59999847	90.983333	18.183333	3.55
Nissan Leaf	42033	173	7.208333333	5/3/2012 19:57	5/21/2012 19:24	N/A	19.93333308	0	59.79999924	173	57.666666	29
Nissan Leaf	42037	34	1.416666666	5/18/2012 18:55	5/20/2012 4:55	N/A	60	60	60	34	34	34
Nissan Leaf	42017	144	6	5/1/2012 5:06	5/21/2012 18:57	N/A	29.95000076	0	59.90000153	144	72	72
Nissan Leaf	42031	4.5	0.1875	5/7/2012 17:36	5/7/2012 22:06	N/A	59.90000153	59.90000153	59.90000153	4.5	4.5	4.5
Nissan Leaf	42028	74.716666	3.113194416	5/7/2012 17:43	5/21/2012 15:06	N/A	32.75	0	71.09999847	74.716666	18.666666	0
Nissan Leaf	42016	83.6	3.483333333	5/3/2012 0:25	5/6/2012 12:29	N/A	0	0	0	83.6	41.8	22.1
Nissan Leaf	42032	4.5	0.1875	5/7/2012 17:52	5/7/2012 22:22	N/A	0	0	0	4.5	4.5	4.5
Nissan Leaf	42027	3	0.125	5/7/2012 14:00	5/7/2012 17:00	N/A	59.79999924	59.79999924	59.79999924	3	3	3
Nissan Leaf	42039	95.483333	3.978472208	5/16/2012 20:42	5/21/2012 19:13	N/A	60.05000114	59.90000153	60.20000076	95.483333	47.733333	23.483333
Nissan Leaf	42019	72	3	5/17/2012 20:39	5/20/2012 20:39	N/A	59.70000076	59.70000076	59.70000076	72	72	72
Nissan Leaf	42040	184.033333	7.668055541	5/7/2012 17:35	5/20/2012 6:10	N/A	12.01999969	0	60.09999847	184.033333	36.8	4
Nissan Leaf	42023	95.316666	3.97152775	5/4/2012 15:09	5/9/2012 13:38	N/A	39.86666616	0	59.79999924	95.316666	31.766666	6.416666
Nissan Leaf	42018	167.066666	6.961111083	5/3/2012 0:04	5/21/2012 19:11	N/A	54.36666616	0	87.09999847	167.066666	27.833333	0.033333
Nissan Leaf	42026	127.266666	5.30277775	5/1/2012 15:03	5/17/2012 20:44	N/A	40.78750038	0	75.5	127.266666	15.9	0.016666
Nissan Leaf	42030	114	4.75	5/3/2012 19:28	5/20/2012 23:53	N/A	19.93333308	0	59.79999924	114	38	9.5
Nissan Leaf	42038	239.8	9.991666666	5/1/2012 5:35	5/21/2012 19:17	N/A	35.85999985	0	59.79999924	239.8	47.95	6.783333
Nissan Leaf	42024	57.5	2.395833333	5/17/2012 21:04	5/20/2012 6:34	N/A	59.59999847	59.59999847	59.59999847	57.5	57.5	57.5
Nissan Leaf	42036	194	8.083333333	5/2/2012 19:57	5/31/2012 19:44	N/A	35.92000046	0	59.90000153	194	38.8	24
Nissan Leaf	42029	111.05	4.627083333	5/7/2012 16:27	6/1/2012 15:19	N/A	75.90000025	59.79999924	90.90000153	111.05	37.016666	17.383333
Nissan Leaf	42034	598.716666	24.94652775	5/1/2012 0:00	5/31/2012 14:45	N/A	22.15294086	0	72.69999695	598.716666	35.216666	0.083333
Nissan Leaf	41744	631.833333	26.32638888	5/1/2012 0:00	5/21/2012 15:03	N/A	22.4312501	0	59.90000153	631.833333	19.733333	0

Examples of CARWINGS Screen Displays
LEAFs 43 and 44

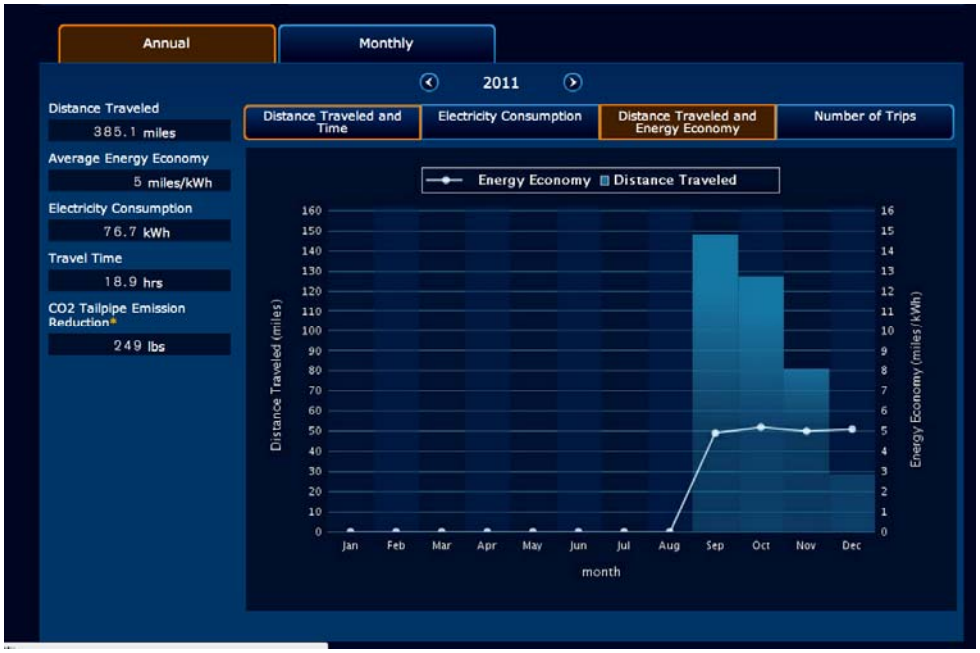

2011 Distance Traveled and Energy Economy, Nissan CARWINGS. LEAF 43

2012 Distance Traveled and Energy Economy, Nissan CARWINGS.
LEAF 43, May 17, 2012, 12:00 pm.

2011 Distance Traveled and Energy Economy, Nissan CARWINGS. LEAF 44

2012 Distance Traveled and Energy Economy, Nissan CARWINGS.
LEAF 44. As of May 17, 2012, 12:00 pm.
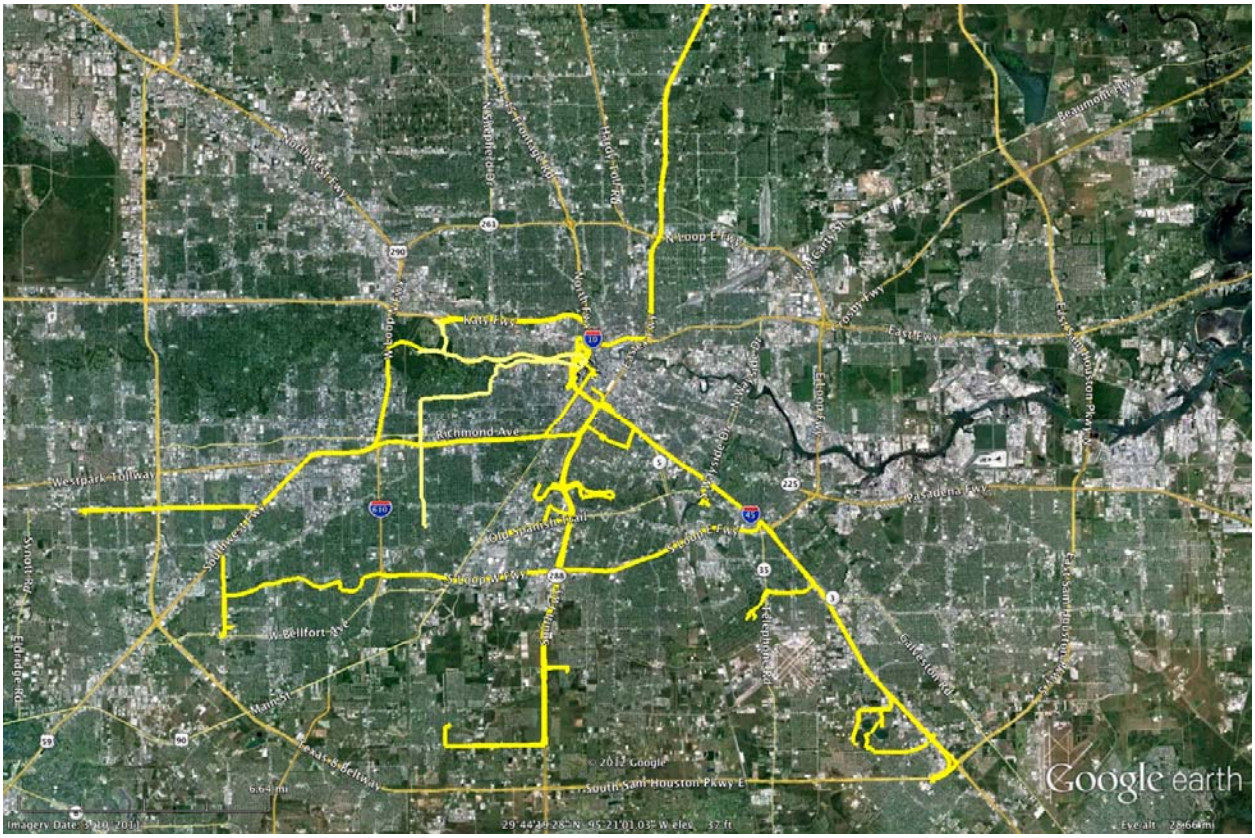
Example GPS Trip Map: October/November 2011 Trips: Prius Hymotion 83. Many trips overlap since the same route was used for origin and destination tripss. Most trips originate from the Tranquility Garage in downtown Houston (central part of map). The outer roadway is Beltway 8.