High-Power Electric Terminal Tractor (HPETT)

Task #1: Drive System Design Report

for:

New Technology Research and Development Program

582-11-13472-2019

Submitted by:

Transportation Power, Inc.

Principal Investigator:
Michael Simon

March 5, 2012

The preparation of this report is based on work funded in part

by the State of Texas

through a Grant from the Texas Commission on Environmental Quality

Table of Contents

ABSTRACT/EXECUTIVE SUMMARY **4**

INTRODUCTION/BACKGROUND **5**

PROJECT OBJECTIVES/TECHNICAL APPROACH **5**

HPETT DEMONSTRATION PROJECT OBJECTIVES 6
HPETT COMMERCIALIZATION OBJECTIVES 6

TASK 1: DRIVE SYSTEM DESIGN **6**

COMPONENT SELECTION PROCESS 7
Propulsion and Power Transmission *7*
Energy Storage *8*
System Controller and Drive System Software *10*
Electric Accessories *11*
Cooling System *11*
Electrical Distribution *11*
DRIVE SYSTEM MATERIAL COST BREAKDOWN 12
ELECTRIC DRIVE INSTALLATION PROCEDURES 12
Propulsion and Power Transmission Subsystem Installation Procedures *14*
Energy Storage Subsystem Installation Procedures *15*
Control Subsystem Installation Procedures *17*
Cooling Subsystem Installation Procedures *17*
Electrical Accessories Subsystem Installation Procedures *18*
Electrical Distribution Subsystem Installation Procedures *19*
INTEGRATION TEST PLAN 21
Overview *21*
Component-Level Testing *21*
Subassembly-Level Testing Steps *21*
Subsystem Testing Steps *22*
Vehicle System Testing Steps *24*
REPORTING 26

DISCUSSION/OBSERVATIONS **27**

OBJECTIVES VS. RESULTS 27
CRITICAL ISSUES 27
TECHNICAL AND COMMERCIAL VIABILITY OF THE PROPOSED APPROACH 28
SCOPE FOR FUTURE WORK 29

INTELLECTUAL PROPERTIES/PUBLICATIONS/PRESENTATIONS **29**

SUMMARY/CONCLUSIONS **29**

Table of Figures

Figure 1: CAD drawing of suitcase battery enclosure 9

Figure 2: High voltage wiring from energy storage sub-system 10

Figure 3: Electrical distribution subsystem on test bed truck 12

Figure 4: Diagram of the terminal tractor space claim: Top view 13

Figure 5: Side view of terminal tractor space claim 14

Figure 6: Motor and transmission attached to mounting adapter 14

Figure 7: Suitcase enclosure tack welded together 15

Figure 8: Cell polarity layout within each suitcase 16

Figure 9: Bus bar connections for each suitcase 16

Figure 10: Under-cab suitcase installation order 17

Figure 11: CAD model of fully integrated drive system 20

Abstract/Executive Summary

This report highlights the results of *Task 1, Drive System Design*, which is the first task completed under the High-Power Electric Terminal Tractor (HPETT) project, being conducted by Transportation Power, Inc. ("TransPower") under a grant from the Texas Commission on Environmental Quality (TCEQ). The principal goals of this task were to select the components for a battery-electric drive system to be installed into two Kalmar terminal tractors supplied by Cargotec, develop plans for installation of the components into the tractors (including layout drawings and installation procedures), and develop and Integrated Test Plan (ITP) describing the tests to be performed to validate the functionality of the electric drive system in the HPETT tractors. The HPETT contract was signed on June 6, 2011, and Task 1 was completed on March 2, 2012.

Introduction/Background

While large automakers focus on developing electric propulsion technology in smaller vehicles, TransPower's technology is focused on the unique problems created by heavy-duty vehicles, including Class 8 trucks and large terminal tractors. These are among the least fuel-efficient, most polluting vehicles in use today. These problems are particularly acute in the case of locally-driven Class 8 trucks and terminal tractors that spend large amounts of time idling and operating a low speeds in heavily-populated areas, such as port drayage and warehouse/distribution facility operations. When equipped with TransPower's electric drive systems, customized for each individual truck/tractor model, these trucks become zero-emission vehicles, operating cleanly and economically on electric power alone. The electric drive motors used to propel these vehicles will obtain all their energy from onboard batteries. Such vehicles are simpler and more reliable than conventional internal combustion engine or hybrid vehicles.

TransPower's product offering is innovative because it's one of the first pure battery-electric drive systems targeted at the largest trucks and tractors. Most companies developing battery-electric propulsion systems are focusing on much lighter-duty vehicles, ranging from the Nissan Leaf compact car to delivery trucks being built by Smith Electric Vehicles, currently the world's oldest and largest supplier of battery-electric trucks. TransPower's drive system uses motors twice as powerful as the largest motor used in Smith's local delivery trucks, as we are targeting a vehicle class up to four times heavier. Most companies developing electric-based solutions for Class 7 and 8 trucks have focused on hybrid-electric drive systems, where electric motors drive the vehicle but onboard batteries supply only a small fraction of the energy used by the vehicle each day. TransPower's innovative approach is to move beyond hybrids to take advantage of recent advances in lithium battery technology, which make it possible for the first time to achieve sufficient operating range with a pure battery solution. Also, by eliminating the engine, transmission, and fuel system, the battery-electric system gets rid of several of the highest maintenance items on a typical conventional or hybrid truck.

The second, most important unique feature of the battery-electric system is that it eliminates fuel use entirely. Whereas hybrids typically reduce fuel use by only 10-20%, and natural gas trucks actually use more fuel than diesel trucks, electric systems will require no refueling, thereby saving a typical truck operator tens of thousands of dollars each year, even after accounting for the cost of electricity to recharge the system's batteries. TransPower estimates that if 80 terminal tractors using 40 gallons of fuel per day were converted to electric drive it could save as much as $4 million/year in fuel costs (based on a diesel fuel price of $3.50/gallon).

Project Objectives/Technical Approach

The High-Performance Electric Terminal Tractor (HPETT) project is a partnership between TransPower, H-E-B, and Cargotec with two overarching objectives: to demonstrate a superior electric drive technology for terminal tractors, and to use this demonstration project as a springboard for rapid commercialization of TransPower's modular electric drive system. TransPower, an early-stage electric vehicle technology company based in California, has purchased two Kalmar Ottawa tractors and is in the process of

retrofitting them with new battery-electric drive systems. H-E-B, a Texas-based, privately-owned retail company, will operate the two electric tractors at its main distribution facility in San Antonio, beginning in September 2012. Key technical, economic, and business objectives are summarized in the bullet points below:

HPETT Demonstration Project Objectives

- Technical: Demonstrate a robust, reliable electric drive system combining proven components with several key new technologies and products.
- Technical: Demonstrate sufficient operating range for terminal tractors using lithium battery energy storage.
- Economic: Demonstrate that electric tractors are more cost-effective to operate than diesel tractors.
- Business: Strengthen TransPower prototype and demonstration vehicle development capabilities.

HPETT Commercialization Objectives

- Technical: Develop a dependable supply chain for delivery of electric truck and tractor components cost-effectively and on a large scale.
- Technical: Develop facilities and methods for rapid and economical integration of electric drive components into "kits" that can be sold to Ottawa and other major tractor manufacturers.
- Economic: Create sufficient demand for vehicle batteries to drive production cost down and make energy storage systems more affordable.
- Business: Market electric drive systems successfully for short-haul truck and tractor applications, starting with terminal tractors and progressing to other markets such as refuse collection.

TransPower's technical approach was designed to accomplish these goals while minimizing the risks and costs associated with product development. We are able to do so by modeling the yard tractor and duty cycle requirements before procuring components and beginning the vehicle integration process. As such, our first task, *Task 1: Drive System Design*, covers the selection of components, integration drawings that indicate where the components will be placed on the vehicle, and a set of procedures for the integration and testing of the vehicles.

The most significant limitation to this approach comes in the form of decreasing marginal benefits with regards to model fidelity. Rather than expend considerable resources modeling the vehicle down to each nut and bolt, TransPower has chosen the optimal compromise, with most lessons learned before vehicle integration. However, integration of the drive system into the two yard tractors is still phased to allow addressing any unforeseen issues that come up when assembling the first vehicle.

Task 1: Drive System Design

From the Grant Activities (Scope of Work):

> *"2.1. Task Statement: The PERFORMING PARTY will select all major electric drive system components and develop and document a final integrated drive system design.*

Component Selection Process

From the Grant Activities (Scope of Work):

> *"2.1.1. Final component selection and procurement*
>
> *2.1.1.1. The PERFORMING PARTY will define all components required for electric operation of the terminal tractors.*
>
> *2.1.1.2. The PERFORMING PARTY will conduct supporting analyses as required to verify that selected components will perform satisfactorily."*

As indicated in the section above, TransPower's technical approach is aimed at achieving new capabilities while minimizing the costs and risks involved with developing a new drive system. To this end, several of the major components TransPower selected for the High-Power Electric Terminal Tractors are commercially available and mass-produced. This provides two major benefits: lower component cost due to economies of scale and developed production processes and lower risk of failure since these components generally have a well-documented reliability profile. Utilizing mature components has allowed TransPower to focus on testing whether or not the components work for this application, rather than whether or not the components work at all (Task 2.1.1.2, above).

To address these issues, TransPower built a prototype Class 8 truck in late 2011 rather than simply testing the components on a bench test setup. This "test-bed" truck allowed TransPower to evaluate the components to a much higher confidence level and allowed us to determine not only that all subsystems work well together, but also that they can be effectively integrated onto a truck chassis. TransPower was then able to learn some key lessons from the test-bed truck and reflect these lessons in drive-system design changes. The following sections describe the component selection and evaluation process, broken out by sub-system.

Propulsion and Power Transmission

Major components included in this subsystem:

- (1) JJE 150 kW AC synchronous electric motor,
- (1) EPC Inverter/charger,
- (1) Tremec ES62-5A transmission,
- (1) Mastershift automated shifting controller and hardware programmed by TransPower, and
- (1) Custom designed input shaft.

For this project, TransPower elected to develop a unique "automated manual" transmission technology to transfer power from the 150 kilowatt (200 horsepower) electric motor to the drive axle. This approach enables superb pull-away torque at much higher efficiencies than would otherwise be achieved using a torque converter or conventional automatic transmission, by eliminating torque converter stall loses while utilizing most of the motor's RPM range.

The propulsion system was selected based on performance, cost, availability, and functionality. The main drive motor is powered by a unique inverter charger designed by TransPower partner EPC. A unique

feature of this inverter is the integration of battery charging capabilities within the unit. This Inverter-Charger Unit (ICU) enables the vehicle to be charged rapidly at multiple locations using an on-board retractable charging cable without the installation of special high current DC charging hardware:

TransPower's component selection process began by simulating the terminal tractor through representative drive cycles in its proprietary drive cycle "model in the loop" simulator. The simulator enabled engineers to determine the minimum transmission specifications that will allow a terminal tractor to complete the anticipated duty cycle. The criteria generated by the performance testing were then evaluated against cost, packaging and mechanical and control system engineering risks with the final selection based on compromises between the aforementioned areas. This modeling revealed that the automatic transmissions that match the drive motor's RPM range are not robust enough for the terminal tractor application.

Given the desire to maintain the tractor's original user amenities such as automatic shifting, TransPower's ultimate choice was to automate the shifting of a medium duty manual transmission with an acceptable RPM limit and ample torque capacity. The automated shifting will be done without the aid of a conventional clutch, reducing mechanical complexity and packaging space requirements. Instead, the drive motor will synchronize the input and output shafts prior to shifting up or down a gear. Due to the drive motor's rapid speed synching capability, shift durations are a fraction of what they would be with a diesel-coupled automatic transmission.

TransPower is utilizing an industry leading control system design process to tune the closed loop motor control necessary to speed synch quickly for short shift duration. By teaming with a local firm, Mastershift, TransPower has secured a robust and tested shift actuation system with years of development behind it, reducing machine design risk. The clean input/output (I/O) interface permits TransPower's drive system software to command the motor and enable shifting by first reducing torque, shifting to neutral, synchronizing the transmission for the next gear, and making that subsequent shift, completing the process and returning torque authority to the driver.

Energy Storage

Major components included in this subsystem:

- (224) 300 Ampere-hour (Ah) Voltronix Lithium Iron Phosphate Cells,
- (56) Flux Power Battery Management System (BMS) Modules,
- High Voltage Cabling and Bus Bars,
- (14) "Suitcase" Battery Enclosures, and
- (2) Manual Service Disconnects (MSDs).

In 2011, TransPower completed testing of two different lithium battery products and ultimately selected Voltronix battery cells for its drive system. TransPower's test-bed truck has 120 Voltronix 260 ampere-hour (Ah) cells; together they make a 100 kilowatt-hour battery pack running at 384 volts. TransPower subsequently elected to utilize 300 Ah cells with the same physical form factor, integrated into a new "suitcase" enclosure that will be utilized for the first time in the terminal tractors.

TransPower's battery enclosure structure and mounting strategy has gone through several revisions based on experience gained with the test-bed truck (developed under a separate program). The new "suitcase"

battery enclosure is built from fabricated pieces of metal that are keyed, allowing them to be quickly aligned and then tack welded together.

A computer assisted design (CAD) drawing of a suitcase battery enclosure is provided in Figure 1. The green components are individual battery cells, while the blue rectangles are BMS modules mounted to the top cover. The top cover is transparent in this image. Each such enclosure will house 16 battery cells, split into two compartments. Each compartment has its own BMS control module. This design is expected to cost less to build than the battery enclosures built for the test-bed truck and other battery enclosure designs evaluated by TransPower over the course of the HPETT project.

Figure 1: CAD drawing of suitcase battery enclosure

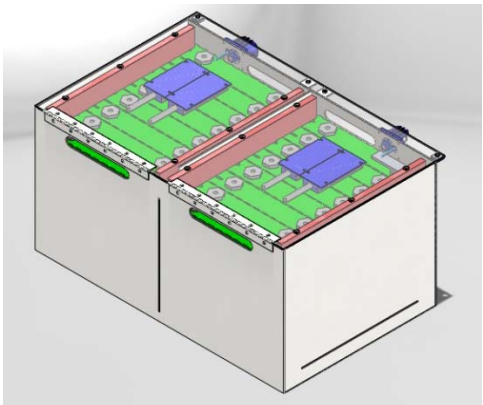

The HPETT electric tractors will utilize two strings of batteries on a shorter chassis than TransPower's test-bed prototype, so the high voltage architecture has been modified to address packaging limitations. Each battery string on the terminal tractor will consist of 7 suitcases in series. The two strings will be wired in parallel, with each string having its own contactors. That permits the vehicle to disable a string if necessary but remain operational. To fit within the space available, the batteries are packaged with 4 suitcases on each side and 6 under the cab. Figure 2 demonstrates how the electrical wiring corresponds with the physical placement of the battery suitcases in order to yield two parallel strings of batteries. Each of the green squares in the diagram represents one 16-cell suitcase. The suitcases on the left half of the diagram are part of String 1, with a Manual Service Disconnect (MSD) near the middle of the battery pack wiring. This structure is duplicated for String 2, which is on the right side of the vehicle. The automotive grade MSDs support ease of serviceability and improve safety by allowing qualified repair personnel to quickly and easily isolate target components from the high voltage bus.

Figure 2: High voltage wiring from energy storage sub-system

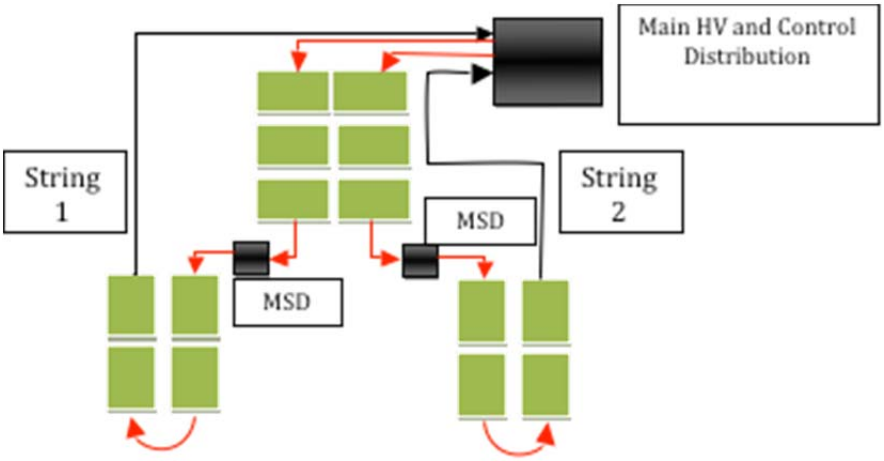

System Controller and Drive System Software

Major components included in this subsystem:

- (2) Mototron 555-80 pin flashable Electronic Control Units (ECUs),
- (2) Smartcraft 6 way CAN junction boxes, and
- ElecTruck proprietary drive system software.

Our ElecTruck proprietary drive system software runs on a pair of Mototron 555-80 pin flashable engine control units (ECUs). This system controller was tested on the bench prior to integration in TransPower's test-bed truck, and has been running on that vehicle. The system ECU controls the other subsystems using a CAN interface, as well as by supplying voltage to open and close contactors and relays.

TransPower's control system development process is designed to enable rapid control prototyping. First, a diagram outlining the input and output requirements of the system is created. A software model is developed to test key algorithms. The system is then validated using real time controllers on actual hardware. Finally, the vetted control code is deployed on a real vehicle for final calibration and tuning.

Since the terminal tractors share many components with the test-bed truck, the development process was jumpstarted. TransPower now has parallel software models so that code developed for both vehicles can be easily propagated and that which is unique kept separate.

Electric Accessories

Major components included in this subsystem:

- (2) Variable Frequency Drives (VFDs),
- (4) Small electric motors,
- (2) Hydraulic pumps,
- (4) Motor soft starters,
- (1) DC-DC Converter: OEM grade high voltage DC to 12V DC,
- (1) J1772 Interface Kit,
- (1) Air Compressor, and
- (1) Air Conditioning Compressor.

The tractor accessories, including the air compressor, power steering pump, air conditioning, and fifth wheel lift, are traditionally powered directly by the tractor's diesel engine. TransPower has specified 5 and 10 HP electric motors to power these accessories electrically. These motors are controlled by VFDs that supply power in the appropriate form to run the equipment. The electric accessories do not need to be powered all the time, so the ElecTruck software is programmed to operate them in a cyclical manner. TransPower discovered while drive testing the test-bed truck that occasionally the high starting current of the electric motors was sufficient to cause an over-current fault on the VFD. Motor soft starters have subsequently been incorporated into the design to eliminate this problem.

Cooling System

Major components included in this subsystem:

- Radiator with Fan,
- Cooling pump,
- Coolant Reservoir, and
- Assorted tubing, fittings, and clamps.

The cooling system is responsible for stabilizing the temperature of several key components: the DC-DC converter, inverter, and drive motor. Waste heat from the cooling loop will be used to provide cab heat, much the same way the original diesel engine did. The cooling system originally installed on the test-bed truck was found to have insufficient pumping capacity to effectively cool the inverter and motor. TransPower subsequently addressed this issue by increasing the pumping capacity. Drive system software contains logic to enable the cooling pump when the component temperatures reach a specific threshold. The effectiveness of this feature has been tested on the test-bed truck.

Electrical Distribution

Major components included in this subsystem:

- High-current DC contactors,
- Bus bars,
- 3-phase contactors,
- Fuses (HV and low V),

- (3)NEMA 4 rated enclosures,
- Ground Fault Detector, and
- 12V Relay Blocks.

The Electrical Distribution subsystem (Figure 3) is responsible for routing power at the appropriate voltage to all of the other subsystems. As such, it is divided into two subsystems: high and low voltage. The high voltage subsystem consists of high current contactors, fuses, mid pack service disconnects (which contain fuses), bus bars, cabling, and cable restraints. The low voltage subsystems consist of low current relays, control wiring harnessing, crimp terminals, and other low power circuitry. The use of environmentally robust NEMA 4 enclosures ensures moisture and debris protection. Sealed panel mount connectors are used to carry power and control signals in and out of the enclosures.

Figure 3: Electrical distribution subsystem on test bed truck

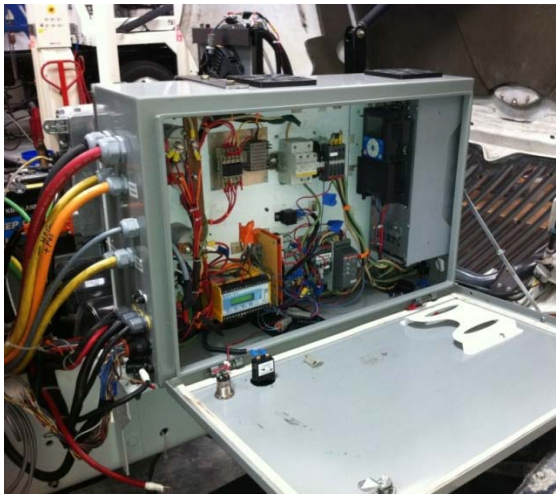

Drive System Material Cost Breakdown

- Energy Storage Subsystem: $96,500
- Propulsion and Power Transmission Subsystem: $69,000
- System Controllers: $3,500
- Electric Accessories: $12,000
- Electrical Distribution: $3,500
- Cooling: $1,500
- Miscellaneous: $3,000

Total Estimated Material Cost: $189,000

Electric Drive Installation Procedures

From the Grant Activities (Scope of Work):

> *"2.1.2. Prepare Integration Drawings and Procedures*

2.1.2.1. The PERFORMING PARTY will acquire vehicle drawings and specifications from the terminal tractor manufacturer and identify suitable locations in the tractors for installation of all components.

2.1.2.2. The PERFORMING PARTY will document the planned electric drive installation with layout drawings and installation procedures."

Figure 4 and 5 are two diagrams denoting major components and their locations on the terminal tractor frame, one from a top view and another showing a side view.

Figure 4: Diagram of the terminal tractor space claim: Top view

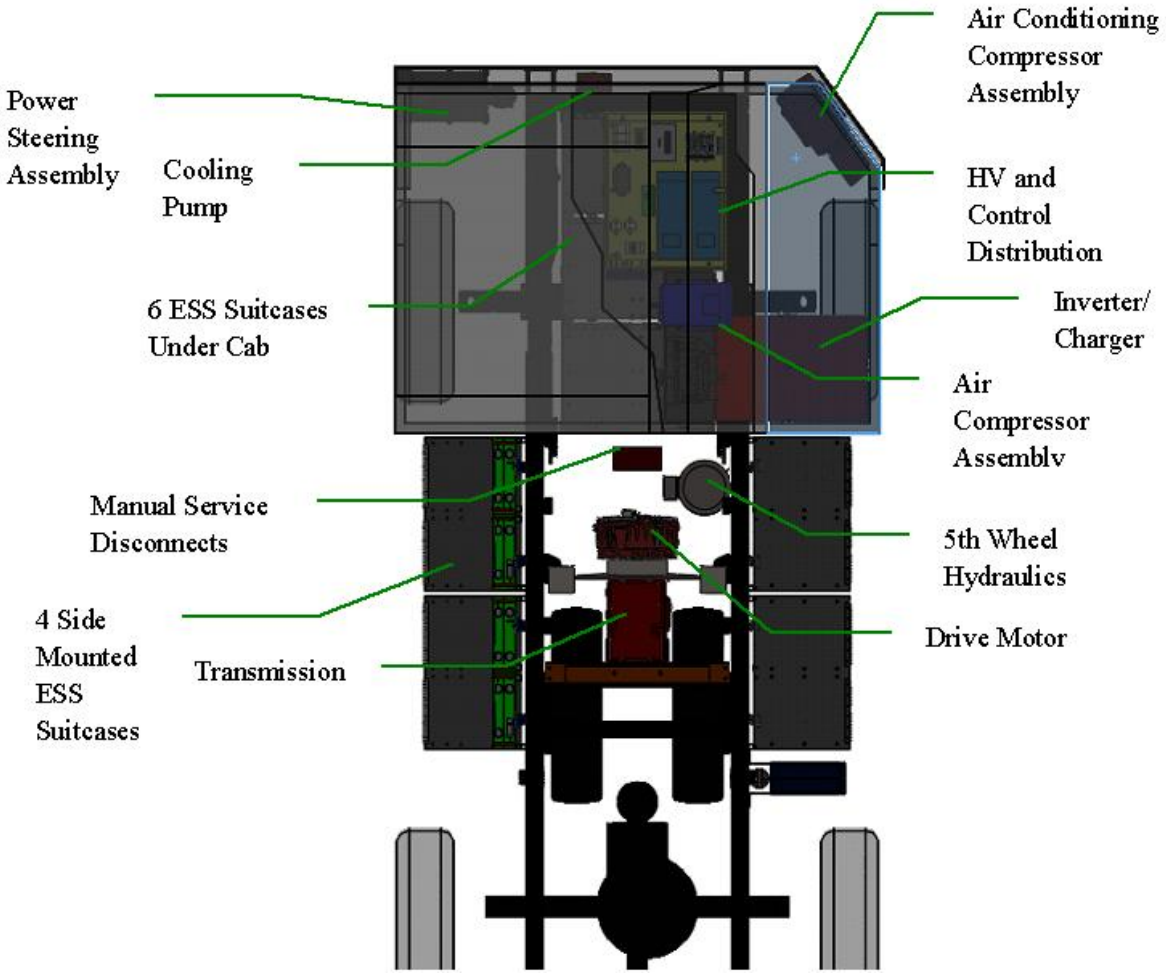

Figure 5: Side view of terminal tractor space claim

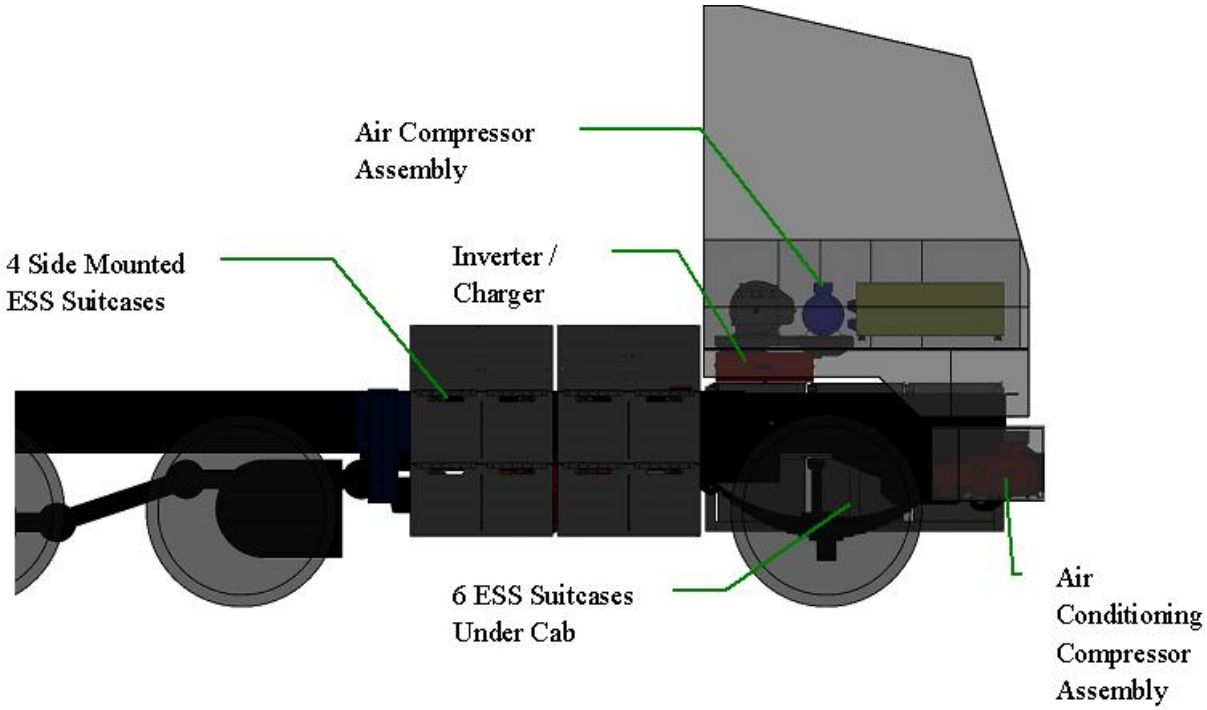

Propulsion and Power Transmission Subsystem Installation Procedures

1. Affix transmission to transmission/motor adapter.
2. Attach motor to adapter. Whole assembly shown in Figure 6.

Figure 6: Motor and transmission attached to mounting adapter

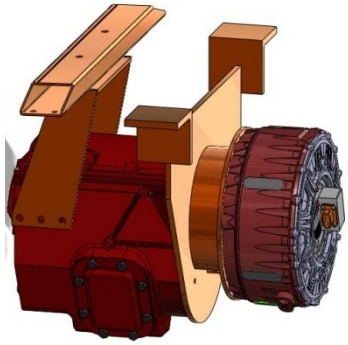

3. Using a hoist for weight support, mount transmission assembly to frame using rubber mounts between adapter and frame.
4. Install U-joint between driveline and output shaft of transmission.
5. Attach wires to motor, observing polarity of wires(transposing any two wires will reverse motor direction).
6. Attach power and control wires to shift mechanism.
7. Fill transmission with proper lubricant.
8. Place inverter/charger on mounting pad and bolt down.
9. Attach high voltage wires to Inverter paying attention to polarity.

10. Connect controls connector to inverter.

Energy Storage Subsystem Installation Procedures

Fabrication and Subsystem Assembly

Mechanical station

1. Place self-aligning suitcase components in position.
2. Verify interior cell dimensions per assembly drawing.
3. Tack weld assembly together. See Figure below.

Figure 7: Suitcase enclosure tack welded together

4. Align lid mounting tabs per the drawing and tack weld.
5. Align the suitcase mounting rails per the drawing and tack weld.
6. Test fit the suitcase lid and hinge ensuring mounting holes align. If not, re-tack mounting tabs.
7. Test fit sample cells for snug fit. It should be possible to install and remove by hand without excessive binding or slop.
8. If there is too much of either, re-tack and compensate appropriately.
9. Weld remaining assembly together taking care NOT to weld within the cell interior.
10. Install all remaining suitcase hardware and pass assembly onto the electrical assembly station. Take care to fasten the suitcase lifting straps to the lift as completed suitcase will weigh 175 kg.

Electrical Station

1. With the suitcase on the high strength assembly table, load the suitcase with 16 cells like so:

Figure 8: Cell polarity layout within each suitcase

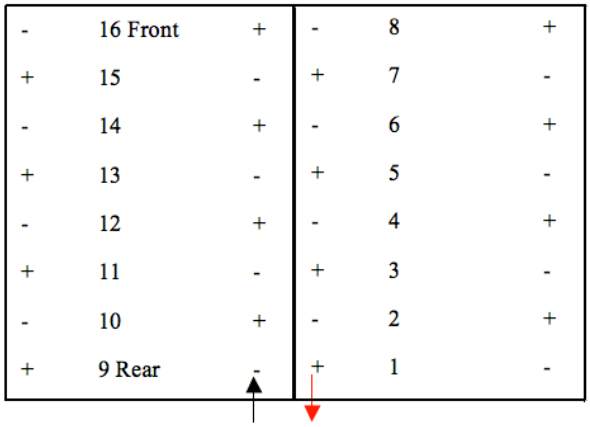

2. Install the two-channel high-voltage connector to the rear of the suitcase and connect with the appropriate bus bar to cells 1 and 9. The colored arrows in Figure 8 represent these connections.
3. Install the BMS modules to the lid with M4 sized hardware.
4. Connect the flexible bus bars and BMS terminals to the remaining cells as follows with M12 cap screws, using Loctite. Figure 9 shows the bus bar connection pattern. Each yellow arrow represents one bus bar connection between two cells.

Figure 9: Bus bar connections for each suitcase

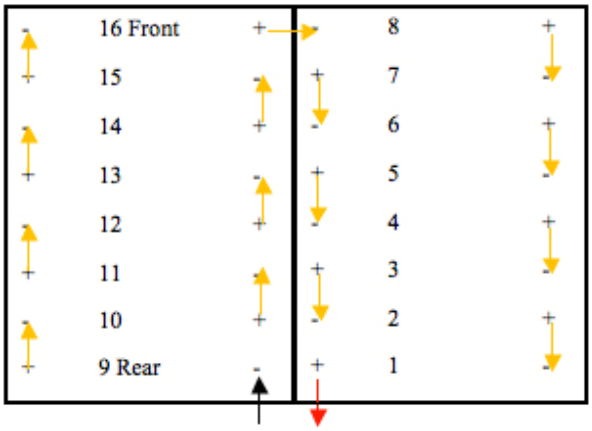

5. Torque all cell terminal hardware to 14 ft-lb.
6. Transfer the suitcases over to the installation station for installation onto the truck.

On-Vehicle Installation

1. Install the front suitcases using M20 hardware in the order shown in Figure 10.
    a. Remember to fasten the high-voltage right angle quick disconnect and BMS quick disconnects prior to bolting down the suitcase.
    b. If the air compressor is installed, remove it prior to installation.

Figure 10: Under-cab suitcase installation order

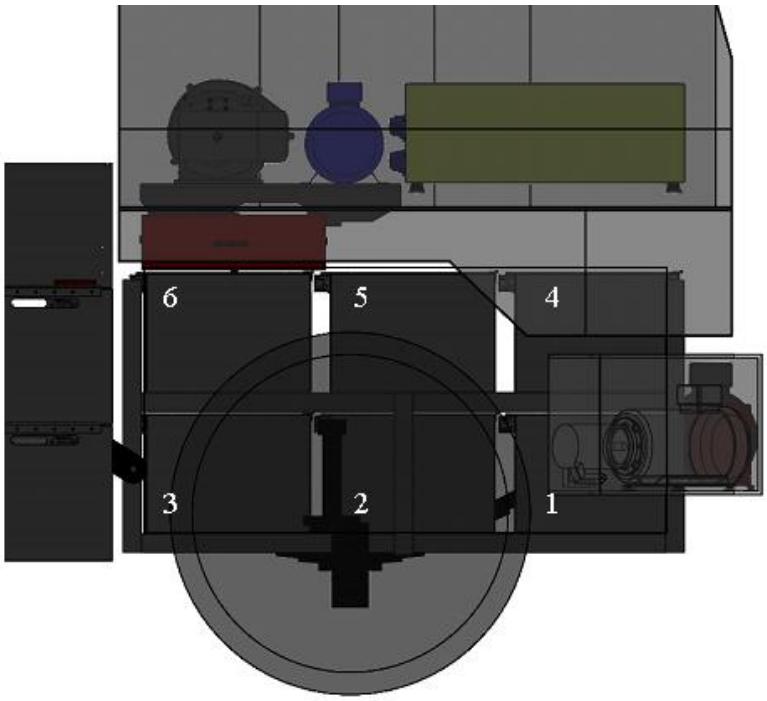

2. Install the side mount suitcases in any order with M20 hardware.

Control Subsystem Installation Procedures

The control system can be installed along side, before, or after most of the components. Critical considerations are listed below to help identify the few critical paths in the truck assembly. Otherwise the majority of the control hardware will be assembled and validated on the bench, then on a dynamometer, and finally moved en masses to the vehicle.

1. Install the under cab suitcase HV and BMS wiring before installing the suitcases.
2. Install the upper bank of side-mounted suitcase HV and BMS wiring before the upper bank is installed.
3. Completely wire up the HV and control distribution box prior to installation.

Cooling Subsystem Installation Procedures

1. Mount radiator and fan assembly to vehicle frame.
2. Mount coolant pump by the vehicle's front bumper.
3. Install fittings in the coolant pump and JJE motor.
4. Connect the radiator and fan assembly coolant outlet to the coolant pump coolant inlet using heater hose.
5. Connect the coolant pump coolant outlet to the inverter coolant inlet using heater hose.
6. Connect the inverter coolant outlet to the JJE motor coolant inlet using heater hose.
7. Connect the JJE motor coolant outlet to the DC-DC converter coolant inlet using heater hose.

8. Connect the DC-DC converter coolant outlet to the radiator and fan assembly coolant inlet using heater hose.
9. Secure heater hose lines to the chassis using appropriate bend radii and chafe protection practices.
10. Fill the radiator and fan assembly with a 50/50 mixture of Glycol and Water.
11. At this point, running the pump should remove all of the air from the cooling system.

Electrical Accessories Subsystem Installation Procedures

The general approach to the installation of the accessory subsystems is to install each subsystem in its designed space location followed by the installation of the interfacing wires, cables, and hoses.

Power Steering

1. Insert the key into the keyway of the hydraulic pump shaft. Insert the pump shaft into the matching female-keyed shaft receptacle of the motor. Verify the correct mounting orientation and secure the pump to the motor.
2. Install the hydraulic fluid reservoir by securing the reservoir-mounting strap to the mounting bracket.
3. Attach fitting to the hydraulic pump inlet. Attach a hydraulic hose from this fitting to the hydraulic reservoir outlet.
4. Attach fittings to the hydraulic pump outlet and power steering inlet. Connect both fittings with the high-pressure hydraulic hose.
5. Attach fittings to power steering outlet and reservoir inlet. Connect both fittings with a low-pressure hydraulic hose.
6. Connect a braided wire ground strap from the motor case to the vehicle chassis ground.
7. After the power supply conduit has been installed, connect the three phase, L1, L2, L3, and neutral wires to the three phase motor terminals in the junction box.
8. Fill the reservoir with hydraulic fluid to 1 inch above the fill mark on the reservoir. After running the pump and turning the steering wheel to the end of travel in each direction add hydraulic fluid to the fill mark on the reservoir.

Air Compressor

1. Using a hoist for weight support, secure the compressor assembly base mounting plate to the chassis mounting brackets.
2. Screw in the air fitting to the compressor output and torque to the desired orientation. Attach an air hose between the compressor output and the vehicle input.
3. Connect a braided wire ground strap from the motor case to the vehicle chassis ground.
4. After the 230VAC power supply conduit has been installed connect the three phase, L1, L2, L3, and neutral wires to the three phase motor terminals in the junction box.

5th Wheel Lift

1. Secure the main hydraulic reservoir tank to the truck chassis and attach the hydraulic fluid filter holder and filter to the tank.
2. Attach the inlet and outlet hydraulic hoses to the main hydraulic reservoir tank.
3. Using a hoist for weight support, secure the 10 Hp motor feet to the mounting bracket.
4. Insert the key into the keyway of the hydraulic pump shaft. Insert the pump shaft into the matching female-keyed shaft receptacle of the motor.

5. Attach a fitting to the inlet side of the hydraulic pump. Attach a low-pressure hydraulic hose to both the inlet side of the hydraulic pump and the outlet of the main hydraulic reservoir.
6. Attach a fitting to the outlet side of the hydraulic pump. Attach a high-pressure hydraulic hose to both the outlet side of the hydraulic pump and the 5th wheel lift control valve.
7. Unscrew the high-pressure hose from the lift cylinders and insert the "Tee" fitting for the high-pressure transducer. Install and attach the shielded twisted pair wires to the transducer.
8. Attach the cab lift hydraulic line to the hydraulic reservoir tank and fill the tank to slightly above the fill mark.

Air Conditioning Compressor

1. Attach the direct coupling jaws to the shafts of the 3 Hp motor and the compressor.
2. Using a hoist for weight support, attach the motor feet directly to the mounting plate.
3. While aligning the coupler jaws and center spider attach the compressor to the mounting plate. Perform final motor – compressor alignment before tightening mounting bolts.
4. Using a hoist for weight support, secure the mounting bracket to the chassis mounting brackets.
5. After the 230VAC power supply conduit has been installed connect the three phase, L1, L2, L3, and neutral wires to the three phase motor terminals in the junction box.
6. If previously disconnected, reconnect the refrigerant lines and torque the nuts. Evacuate the cooling system lines and recharge the refrigerant and lubrication oil.

Electrical Distribution Subsystem Installation Procedures

Preassembly

1. Mount and secure each of the interior components
2. Install and secure the prewired interface connectors.
3. Complete the internal wiring and "ohm test" to verify the correct connections.
4. Install, as required, a ground wire or strap from each component to the box chassis.

On-vehicle Installation

1. Using a hoist for weight support, move the preassembled box to the truck and secure the mounting brackets.
2. Attach a woven mesh wire ground strap between the box and the truck chassis.
3. Attach the external wiring."Ohm test" to the other end of the wires to assure correct connection.

Figure 11 shows a CAD model of the drive system fully installed onto a terminal tractor chassis.

Figure 11: CAD model of fully integrated drive system

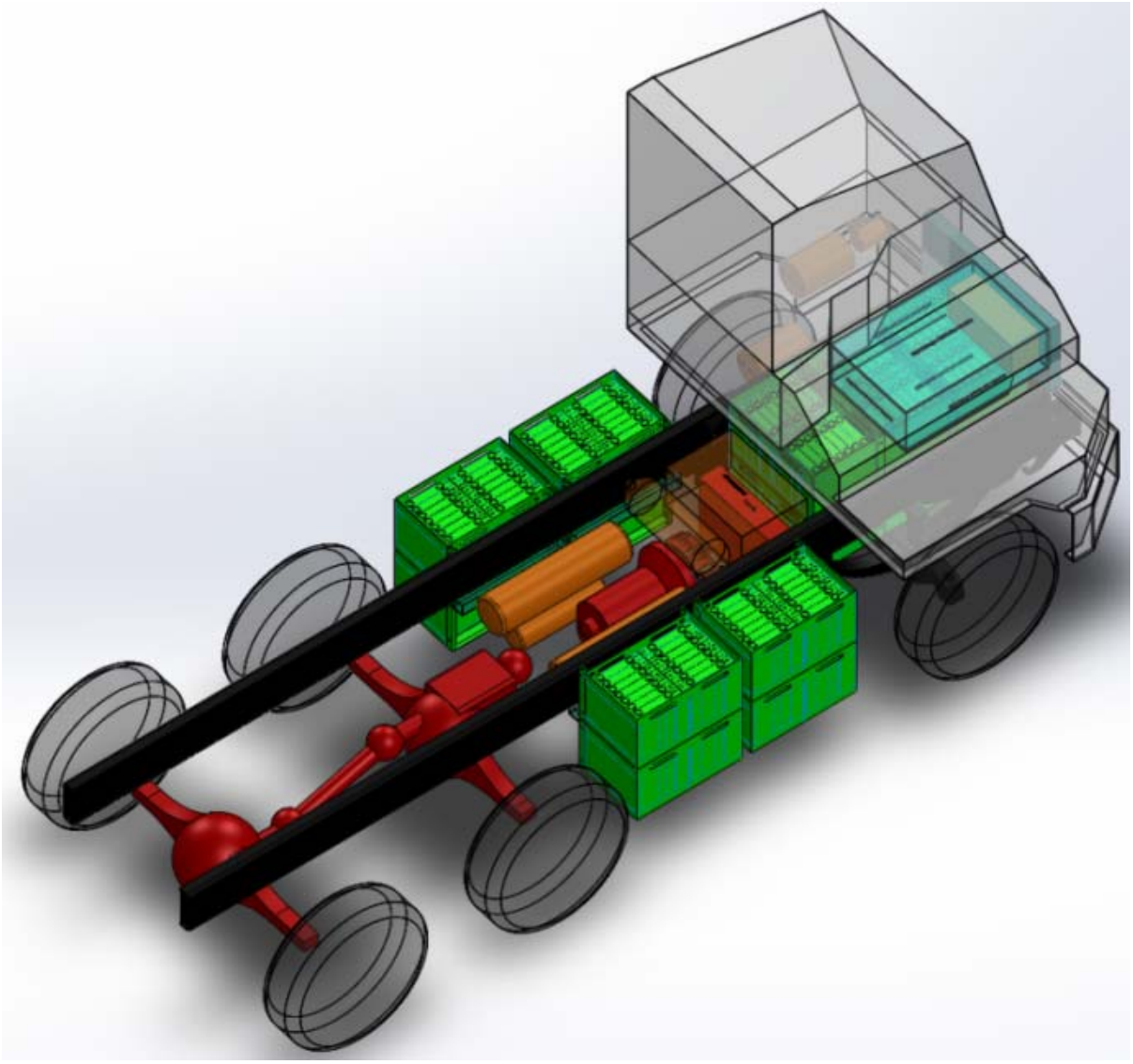

Integration Test Plan

From the Grant Agreement (Scope of Work):

> *"2.1.2.3. The PERFORMING PARTY will prepare the Integration Test Plan (ITP), which shall include a description of all tests required to validate suitability of the drive system installation and basic functionality of the drive system and its components."*

Overview

Validation of the design and functionality of vehicles delivered under this contract will be assured through the implementation of this Integration Test Plan (ITP). The ITP consists of four distinct phases of calibration and testing: component-level, assembly-level, subsystem-level, and vehicle system-level.

Component-Level Testing

This testing will verify that each individual component is working properly before being integrated into a system. At appropriate points in the vehicle integration schedule, bench-top testing of system controllers, motor inverters, base-vehicle embedded controllers, intelligent safety devices, DC-DC converters, BMS modules and battery system monitors, and accessory inverters will be performed. These tests will include basic power-up, setting of appropriate basic operational parameters such as communication rates and menu-driven calibrations, measurement of basic responses, and adjustment of integration planning based on lessons learned from testing.

Key Results: A checklist indicating that envelope and mounting feature dimensions are within tolerance limits and indicating successful power-up status check, for each component.

Subassembly-Level Testing Steps

This testing will verify design decisions regarding component space claim, fitment and assembly procedures, completeness of bill-of-materials, and elements of electrical and mechanical safety. These tests provide early feedback on the suitability of interface specifications between subassemblies within critical subsystems.

System Controller and Drive System Software

Testing to be Performed:

- CAN communication verification
- Harness function verification
- Software-in-Loop control code testing

Key Results:

- A check list indicating CAN message rationality.
- A check list verifying harness wiring continuity, by wire number.
- Completed ElecTruck base code and verification that code size does not exceed available memory on ECU.

Electric Accessories and Cooling System

Testing to be Performed:

- Packaging verification
- Power wiring verification
- Air line pressurization verification

Key Results:

- A checklist indicating that all hoses, wires and cables are fully and correctly connected, that any power wiring has passed a continuity test, and that any air lines have been successfully pressurized.

Energy Storage System

Testing to be Performed:

- ESS suitcase packaging verification
- Suitcase BMS wiring and bus bar verification

Key Results:

- A checklist for each suitcase indicating that the cell packaging dimension status has been verified, that the torque on each cell terminal fastener is 14 ft-lbs, that each BMS module is successfully communicating over CAN and that the voltage is within acceptable limits.

Propulsion and Power Transmission

Testing to be Performed:

- Fitment verification
- Motor/Inverter power cabling verification

Key Results:

- A checklist indicating verification of fabricated mounting hardware dimensions and that the power cable routing status has been confirmed.

Base Vehicle

Testing to be Performed:

- Mounting feature verification
- Space claim verification

Key Results:

- A detailed space claim in CAD.

Subsystem Testing Steps

This testing activity will verify initial calibrations and performance calculations for complete subsystems. These tests typically are initiated by manual control commands from the vehicle supervisory controller of

cab-mounted controls to verify timing and sequence of operation of subsystems. Sensor integrity and actuator effectiveness are observed. Refined sensor and actuator calibration, fault checking, limited failure modes and effects verification, and isolation verification of electrical, thermal and mechanical integrity are outcomes of these tests.

System Controller and Drive System Software

Testing to be Performed:

- Harness installation verification
- Control Code testing for manual I/O
- Sensor Calibration and verification
- Actuator Calibration and verification
- CAN communication testing.

Key Results:

- A checklist indicating successful completion of a manual control status test.
- Confirmation that various sensor readings are consistent with each other.
- A checklist indicating actuators are responding to control signals successfully.

Electric Accessories and Cooling System

Testing to be Performed:

- Accessory inverter functional testing
- Manual accessory control verification
- Air Compression functional rate test
- Power steering functional rate test
- Cooling system pump and fan function testing
- 5th Wheel Lift functional rate test

Key Results:

- A checklist verifying the successful completion of the following tests: Variable Frequency Drive start, stop, fault recovery, current, and voltage tests as well as verification that the VFD can supply power to multiple accessories at the same time.
- A table recording the electrical power required to run power steering pump and hydraulic lift pumps at full load, cooling system loop flow rate and pressure, air compressor pump-up time, time required for 5th wheel lift to fully activate.

Energy Storage System

Testing to be Performed:

- Cabling and HV distribution verification and testing
- BMS to cell calibration and verification
- Safety system testing and verification
- Charge and discharge function testing

Key Results:

- Table recording ESS Voltage Drop, terminal temperatures, cell temperatures, cell voltages, ground fault threshold, cell imbalance voltage as received, time to balance, and pack capacity in Ah.

Propulsion and Power Transmission

Testing to be Performed:

- Motor function testing
- Transmission shifting verification

Key Results:

- A table recording ESS power at driveline under a free-spin condition, time to shift up and down under a free-spin condition.

Base Vehicle

Testing to be Performed:

- HMI to controller integration testing
- Braking system test and verification
- Base vehicle wiring test and verification

Key Results:

- Checklist verifying that the HMI and other base-vehicle accessories have been successfully connected.
- Notation of braking cycles per compressor cycle.

Vehicle System Testing Steps

System Controller and Drive System Software

Testing to be Performed:

- Start sequence testing
- Shut-down sequence testing
- Torque security testing
- Fault handling testing
- Torque authority testing

Key Results:

- Table recording time to complete start sequence, time to complete shut-down sequence, time to recognize torque security faults, time to respond to torque security faults, time to reach full speed in free-spin, time to stop free-spin with regenerative braking.

Electric Accessories and Cooling System

Testing to be Performed:

- Accessory Inverter load testing
- Compressor pump up rate test
- Power steering authority test
- Noise, vibration and power consumption testing

Key Results:

- Table recording required power from variable frequency drives under worst case scenario (all accessories activated at the same time), ESS voltage drop under same conditions, and noise level (dB) for accessory systems measured 1 meter from tractor.

Energy Storage System

Testing to be Performed:

- Cell and pack data logging verification
- Cabling and fusing functional verification
- Full cycle charge and discharge testing

Key Results:

- Dataset containing cell voltage, temperature and current collected during a 1 hour test with the vehicle in a stationary vehicle test configuration.

Propulsion and Power Transmission

Testing to be Performed:

- Motor Power testing
- Transmission shift-on-the-fly verification
- Cooling system effectiveness testing

Key Results:

- Dataset containing pack voltage and current, motor and inverter temperatures, shifting times, torque, RPM, vehicle speeds and accessory states and power levels for 1 hour of loaded, low-speed driving on a closed course.

Base Vehicle

Testing to be Performed:

- Final Human Machine Interface calibration and verification of control authority
- ABS system functionality verification
- Refined calibration and verification of communication with and control of base vehicle components.

Key Result:

- Driver rating on a 1-10 scale of driver satisfaction prior to rigorous drive testing.

Reporting

From the Grant Agreement (Scope of Work):

> *"2.1.3. Schedule: The PERFORMING PARTY shall complete this task within 9 months of the signed Notice to Proceed Date as issued by TCEQ.*
>
> *2.1.4. Deliverables: The PERFORMING PARTY shall submit a report to the TCEQ upon completion of this task. This report will include but is not limited to a detailed estimate of drive system material costs, an installation drawing package, installation procedures, and the Integration Test Plan."*

This report satisfies the Grant Agreement requirements for Reporting as related to Task 2. The Integrated Test Plan is included within the body of the report.

Discussion/Observations

Objectives vs. Results

The overarching objective of Task 1 was to make an intelligent selection of components for the electric drive systems to be used in the HPETT vehicles based on market research, internal analysis, and development of a viable integrated drive system design. Task 1 results are largely consistent with these objectives. We have generated an integration concept that accommodates all major components within the physical dimensions of the vehicle, have fully defined all major components – taking into consideration vehicle operating requirements as we understand them today – and have produced detailed supporting data such as a bill of material including component costs and an ITP.

Task 1 has also moved us an important first step closer to achieving the broader project objectives of demonstrating a reliable drive system balancing use of proven components and new technologies and validating sufficient operating range with lithium batteries. The integration drawings generated during Task 1 show a viable configuration based on the component mix sought, which detailed measurements indicate should fit within a terminal tractor chassis. The battery subsystem size was driven by the maximum battery pack size that be accommodated without major changes such as stacking batteries on the outside of the cab. This battery configuration, consisting of 14 “suitcase” modules and a total of 224 large format 300 Ah cells, is projected to provide ten hours of continuous operation. The two ICUs to be used for battery charging are expected to be capable of recharging the batteries in less than two hours, creating the possibility that these tractors could be used as many as 20 hours each day, which would satisfy the vast majority of user requirements. Of course, completion of the subsequent Vehicle Integration and Vehicle Durability Testing tasks will be required before we can conclusively determine if these broader objectives have been met.

The greatest setbacks so far have been supply chain issues, which have affected the delivery of the tractors themselves, along with key components such as the Quantum inverters and lithium batteries, both of which have 14-week lead times from placement of order to delivery. For the most part, we have been able to work around these delays by focusing attention on the design and acquisition of other components, such as the electrically-driven accessory subsystem and the transmission. We have also been able to maximize the value of our prototype battery-electric on-road truck, completed in October 2011, whose initial testing has yielded valuable lessons that we have applied to the HPETT project. For example, the battery energy storage subsystem (ESS) was completely redesigned after installation of the first 120-cell battery string on the Navistar on-road truck, with the cell rating increased from 260 to 300 Ah, the number of batteries per string reduced from 120 to 112, and the physical design of battery enclosures completely revamped. Therefore, while component delays have delayed physical integration of the first tractor, in a sense this delay has been fortuitous because it has given us more time to evolve the tractor design, which will hopefully result in a more capable vehicle once the tractors are completed.

Critical issues

The most critical issue facing the HPETT project is the development risk associated with the ICU. This is a completely new, clean-sheet design product that is required to meet two vital functions: motor control

and battery charging. ICU development is being funded separately by TransPower and its ICU manufacturing partner EPC on a separate project, but the HPETT project is nonetheless dependent on availability of a reliable ICU in a timely manner. We have backup solutions in the event of a protracted delay in development of the ICU, but these backup plans have issues themselves. The Quantum inverter which is our backup device for motor control has performed poorly in initial testing with our on-road Navistar truck. This may be due to the fact that the two Quantum inverters we purchased for the Navistar program in 2011 were reconditioned units, but we won't know for sure until the first new Quantum inverters are delivered to us in April 2012. There are no attractive backup options for battery charging as the only other commercially available solutions are off-board chargers that would cost significantly more than the ICU and not charge as fast while also taking up space in the vehicle operator's facility. To avoid the necessity of falling back on these or other backup options, we are doing our best to keep ICU development on track. Initial tests of our first prototype ICU have proceeded favorably, and we remain hopeful that fully functional ICUs capable of controlling tractor motors and recharging tractor batteries will be available by this summer.

Other critical issues that will affect our ability to meet project objectives include: the reliability of the ESS using powerful but very low cost battery cells; the functionality and reliability of the unproven transmission we have selected; and our overall success in integrating the many new components that will have to work together seamlessly for the tractors to be useful. These issues are all exacerbated by the fact that the tractors will be delivered to a test site in Texas, a long distance from TransPower's headquarters, within a few months if not weeks of vehicle completion. We will rely heavily on our ITP to guide us through the testing and evaluation necessary to maximize confidence in these tractors before they are shipped to Texas.

Technical and commercial viability of the proposed approach

As indicated above, the major question related to technical viability is the unknown performance of the ICU being developed by TransPower and EPC, the first prototype of which is still being bench tested and won't be ready for installation into a vehicle for at least another two or three months. The other critical issues described above point to other question marks relating to the proposed approach. However, an advantage of the TransPower approach is that we are using a significant number of off-the-shelf components, minimizing the number of new and completely unproven components such as the ICU. The bill of material suggests that, even in volume, the complete drive system will cost upwards of $150,000, not including installation. This means an electric tractor is likely to cost 3-4 times as much as a standard diesel tractor. For such a high-priced product to be commercially viable, it will have to offer significant operational cost savings. We are constantly updating our estimates of fuel and maintenance cost savings, and more recently have been looking at vehicle-to-grid (V2G) connectivity opportunities as ways of recovering the higher cost of the electric tractor. Much of the commercial viability of the end product will depend on its reliability, ability to work for extended periods between charging stops, the price of fuel, and the value of ancillary services via V2G. We believe these factors could combine to produce a net benefit of $30,000 to $50,000 per year for an electric tractor, enabling its incremental cost over a diesel tractor to be recovered within 4-10 years.

Scope for future work

The next tasks are to integrate the drive system into the two terminal tractors and then begin durability and real world testing. As discussed above, this work must be completed before TransPower can fully accomplish the demonstration project objectives. *Task 2: Vehicle Integration* began in late February to early March 2012 and is expected to continue through August 2012, with a significant acceleration of work once major long lead components such as motors, interim inverters, and batteries begin arriving in April and May 2012. Our goal is to complete integration of the first tractor by mid-summer 2012 so we can achieve at least 4-6 weeks of Vehicle durability testing (Task 3) with this vehicle before shipping it to Texas for in-service field demonstration testing (Task 4). The second tractor will likely lag behind the first by 2-3 weeks, reducing the time it will have for durability testing before it goes to Texas.

Intellectual Properties/Publications/Presentations

TransPower has not applied for any patents nor developed any IP specific to this project. We have not yet planned to deliver any related presentations or publications. However, we are sharing technical data from the project with several prospective customers from California to New Jersey, and recently we even responded to an inquiry from Japan.

Summary/Conclusions

TransPower has designed the drive system that will be integrated into the terminal tractors. This design work includes component selection, physical placement of the components on the tractor chassis, and an understanding of how all of the parts will be installed into the tractor. While several key intermediate steps were delayed, TransPower has been largely able to offset these delays by focusing engineering attention on more detailed analysis and redesign of selected subsystems based on lessons learned on our on-road truck project. The next steps are to integrate the drive system into the two tractors, at which point TransPower will be able to fully test the drive system design as indicated in the Integration ITP. Much of the remaining project uncertainty should be resolved by the end of May2012, by which time all major components with the possible exception of the ICU should be installed into at least one tractor and by which time we should also have a better idea of how much testing will be required before the ICU can be deemed ready for use as the primary motor control and battery charging device on these vehicles.