RG-384
Revised January 2019

How to Develop a Monitoring Plan for a Public Water System

Water Supply Division

TEXAS COMMISSION ON ENVIRONMENTAL QUALITY

printed on
recycled paper

How to Develop a Monitoring Plan for a Public Water System

Prepared by
Water Supply Division

RG-384
Revised January 2019
<www.tceq.texas.gov/assets/public/comm_exec/pubs/rg/rg-384.pdf>

Jon Niermann, *Chairman*
Emily Lindley, *Commissioner*

Toby Baker, *Executive Director*

We authorize you to use or reproduce any original material contained in this publication—that is, any material we did not obtain from other sources. Please acknowledge the TCEQ as your source.

Copies of this publication are available for public use through the Texas State Library, other state depository libraries, and the TCEQ Library, in compliance with state depository law. For more information on TCEQ publications visit our website at:

tceq.texas.gov/publications

Published and distributed
by the
Texas Commission on Environmental Quality
P.O. Box 13087
Austin TX 78711-3087

The TCEQ is an equal opportunity employer. The agency does not allow discrimination on the basis of race, color, religion, national origin, sex, disability, age, sexual orientation or veteran status. In compliance with the Americans with Disabilities Act, this document may be requested in alternate formats by contacting the TCEQ at 512-239-0010 or 1-800-RELAY-TX (TDD), or by writing P.O. Box 13087, Austin, TX 78711-3087.

How is our customer service? tceq.texas.gov/customersurvey

Contents

Preface 1
Our Authority Over Public Drinking Water 1
What Rules Apply to PWSs In Texas? 1
Regulations for Water Haulers, Bottlers, And Vendors May Apply 2
Who Can Answer Questions About These Rules? 2
How Can I Get Copies of TCEQ Publications? 2
Chapter 1. Introduction 3
Who Must Have a Monitoring Plan? 3
What Is a Monitoring Plan? 4
What Does This Guide Cover? 4
About Appendix A 4
What Has Changed Since the Last Version? 4
Instructions for Completing the Template 5
Glossary 6
We Are Here to Help 6
Four Concepts: Sources, Plants, Entry Points, and Distribution Systems 6
Wholesalers and Consecutive Systems (Providers and Receivers) 8
Choosing Sampling Sites 8
Chapter 2. PWS Points of Contact 9
How Do I View and Update Points of Contact for my PWS? 9
Administrative Contact 9
Owner/Legal Contact 9
PWS Contact 10
Chapter 3. PWS Details 11
Sources 11
Water Treatment 11
Entry Points 12
Water Storage Facilities 12
Distribution System Details 12
Pressure Planes 12
Booster Disinfection 13
Wholesaling 13
Chapter 4. Surface Water Treatment Rule 14
Nonregulatory Samples 14
Disinfection Zones (30 TAC 290.111) 15
Examples of Treatment Tables for a Plant 15
Combined Filter Effluent Turbidity for SWTPs (30 TAC 290.111) 19
Location 19
Frequency 19
Help with Surface Water Monitoring and Reporting 19
Individual Filter Effluent Turbidity for SWTPs (30 TAC 290.111) 20
Location 20
Frequency 20
Entry Point Disinfectant Residual (30 TAC 290.110 and 290.111) 21
Example of Multiple Sources or Plants with One Entry Point 21
Example of Entry Point Numbering 22
Example of Multiple Sources with Multiple Entry Points 22
Total Organic Carbon for SWTPs (30 TAC 290.112) 23
Location 23

Frequency ... 23
Long Term 2 Enhanced Surface Water Treatment Rule (LT2) Requirements (30 TAC 290.111) ... 24
Determining Raw Surface Water System Schedules for Existing Sources ... 25
Determining Raw SW System Schedules for New Sources ... 25
Raw Surface Water Sampling Plan ... 26
Raw Surface Water Sampling Frequency ... 26
Chapter 5. Groundwater Rule ... 27
Groundwater Rule Requirements ... 27
Wells Not Continuously Used ... 28
New Wells ... 28
Triggered Source Monitoring ... 28
How Distribution Sites Link to Wells ... 29
Representative Wells ... 31
Interconnections with Other Groundwater Systems ... 33
Triggered Source Monitoring Plan Requirements ... 33
Assessment Source Monitoring ... 34
Plant Schematic ... 34
Chapter 6. Revised Total Coliform Rule (RTCR) and Disinfectant Residual ... 37
Applicability ... 37
Frequency ... 37
Location ... 39
Disinfectant Residual: Free or Total Chlorine (30 TAC 290.110) ... 41
Location ... 42
Frequency ... 42
Sampling for Systems that Use Monochloramine ... 44
Sampling for Systems that Use Chlorine Dioxide (30 TAC 290.110) ... 44
Distribution System Chlorine Dioxide ... 44
Chapter 7. Inorganic, Organic and Radionuclide Rules ... 46
A Note on Contractor-Collected Samples ... 46
Inorganic Contaminants and Secondary Constituents ... 46
Minerals and Metals (30 TAC 290.106) ... 47
Nitrate and Nitrite (30 TAC 290.106) ... 47
Fluoride (30 TAC 290.106) ... 48
Secondary Constituents (30 TAC Sections 290.105 and 290.118) ... 49
Asbestos (30 TAC 290.106) ... 49
Organic and Radionuclide Contaminants ... 50
Synthetic Organic Chemicals (30 TAC 290.107) ... 50
Volatile Organic Chemicals (30 TAC 290.107) ... 51
Radionuclide Contaminants (30 TAC 290.108) ... 52
Chapter 8. Disinfection Byproducts Rule ... 54
Stage 2 Disinfectants and Disinfection Byproducts Rule Requirements ... 54
Frequency ... 54
Chlorite Monitoring (for Chlorine Dioxide Systems; 30 TAC 290.114) ... 57
Frequency ... 57
Location ... 58
Bromate Monitoring (for Systems Using Ozone; 30 TAC 290.114) ... 58
Frequency ... 58
Location ... 58
Chapter 9. Lead and Copper Rule (LCR) ... 59
Lead and Copper Distribution and Source Water (Entry Point) Sampling ... 59

Frequency ... 59
Location ... 59
New Water Systems ... 60
Water Quality Parameter Sampling ... 60
New Water Systems ... 61
Chapter 10. Laboratory Approval Form and Instructions ... 62
Who Must Complete the Laboratory Approval Form? ... 62
Laboratory Approval Procedure ... 62
Types of Analytes ... 62
Approved-Lab Analytes ... 63
Accredited-Lab Analytes ... 63
"Not Required" Analytes ... 64
Submitting a Drinking Water Lab Approval Form ... 64
Mailing Address ... 64
Electronic Mail ... 64
Fax Number ... 64
Record Retention ... 64
Appendix A. Monitoring Plan Template Instructions ... 65
A: Points of Contact (POC) Information ... 67
Purpose of Section ... 67
POC Information ... 67
Signature Block ... 68
B: Source Details ... 68
Purpose of Section ... 68
Sources ... 69
Purchase Water Sources ... 70
C: Water Treatment Details ... 70
Purpose of Section ... 70
Treatment Flow ... 71
D: Entry Points, Storage Facilities, and Distribution Details ... 71
Purpose of Section ... 71
D.1: Entry Points ... 72
D.2: Water Storage Facilities ... 72
D.3: Distribution Details ... 73
Does the system have more than 1 pressure plane? ... 73
Does the system booster disinfect in distribution? ... 73
Does this water system sell water to any other public water system? ... 73
Additional Information ... 74
E: Surface Water Treatment Rule ... 74
Purpose of Section ... 74
I. Disinfection Zones ... 74
II. Turbidity ... 75
III. Entry Point Disinfectant Residual ... 76
IV. Long Term 2 Source Water Monitoring ... 76
V. Total Organic Carbon (TOC) ... 77
VI. Treatment Technique (TT) Compliance Determination ... 77
F: Groundwater Rule (GWR) ... 78
Purpose of Section ... 78
I. Triggered Source Monitoring (TSM) ... 78
II. Compliance Monitoring for 4-log (Inactivation of Viruses) Treatment ... 78
III. Compliance Determination for 4-log Treatment ... 79

IV. Assessment Source Water Monitoring 79
V. Treatment Technique (TT) Compliance Determination 80
G: Revised Total Coliform Rule (RTCR) and Disinfectant Residual 80
Purpose of Section 80
I. RTCR Sample Siting Plan (SSP) 81
II. RTCR Compliance Determination 81
III. Disinfectant Residual Monitoring in the Distribution System 81
IV. Alternative Disinfection Monitoring 83
H: Inorganic, Organic, and Radionuclide Rules 84
Purpose of Section 84
I. Inorganic Monitoring Requirements 84
II. Organic Monitoring Requirements 85
III. Radionuclide Monitoring Requirements 86
IV. Increased Monitoring Requirement 86
V. MCL Compliance Determination 86
I: Disinfection Byproducts Rule 86
Purpose of Section 86
I. Stage 2 Disinfection Byproducts 87
II. Other Disinfection Byproducts 87
III. DBP2 Increased Monitoring Requirement 88
IV. DBP2 MCL Compliance Determination 88
J: Lead and Copper Rule 89
Purpose of Section 89
I. Lead and Copper Tap Monitoring 89
II. Increased Monitoring Requirement 90
III. Action Level Exceedance Determination 90
K: Additional Monitoring: Rule Exceptions 90
Purpose of Section: 90
Rule Exceptions 90
L: Laboratory Information 91
Purpose of Section 91
Laboratory Information 91
Drinking Water Laboratory Approval Form and Instructions 92
Drinking Water Lab Approval Form 92
Table 1 94
Appendix B. Glossary 95
Abbreviations and Acronyms 95
Terms and Definitions 98

Preface

This publication provides guidance on how to comply with Title 30 of the Texas Administrative Code (30 TAC), Chapter 290, Subchapter F: "Drinking Water Standards Governing Drinking Water Quality and Reporting Requirements for Public Water Systems," Section 290.121: "Monitoring Plans."

Monitoring requirements for each constituent are described in this guide, but more detailed information is available in the rules. If there appears to be a discrepancy between this guidance and the rules, the rules supersede this guidance.

You can find a glossary in Appendix B of this document which contains a list of acronyms and abbreviations used through this guidance, as well as definitions for key terms.

In this guide, the word "you" refers to owners and operators of PWSs. The word "we" refers to the TCEQ.

The rules governing this guide were published in the Texas Register. The current rules can be accessed in multiple formats through our website at <www.tceq.texas.gov/goto/rules>.

Our Authority Over Public Drinking Water

The Texas Commission on Environmental Quality oversees the regulation of public drinking water in the state. This means that we implement a Public Water System Supervision (PWSS) program for PWSs in Texas.

We write, adopt, and enforce Texas Public Drinking Water rules (30 TAC Chapter 290) that are at least as stringent as the rules promulgated by the EPA. Texas PWSs and their consultants should become familiar with the specific Texas rules, because our rules may be more specific than, or worded differently from, the EPA rules.

What Rules Apply to PWSs In Texas?

PWSs must comply with all the applicable requirements. In addition to the rules in 30 TAC, Chapter 290, you should be aware of other state rules pertaining to public drinking water. Each of these rules explain exactly when it applies to a PWS. Some examples of these rules and their location within the regulations are:

- **30 TAC, Chapter 290, Subchapter D**. Rules and regulations for public water systems related to requirements for water treatment plant design, operation, and maintenance. If you have questions about Subchapter D, contact us by calling our main line at 512-239-4691 and request the Plan and Technical Review Section.
- **30 TAC, Chapter 290, Subchapter E.** Requirements regarding the Public Health Service (PHS) fees for public water systems. If you have questions about Subchapter E, contact us at 512-239-4691 and request the PHS coordinator within the Drinking Water Specials Functions Section.

- **30 TAC, Chapter 290, Subchapter F**. Requirements regarding harmful or potentially harmful constituents for water systems that supply potable water to the citizens of Texas. If you have questions about Subchapter F, contact us at 512- 239-4691 and mention what specific section you have a question about.
- **30 TAC, Chapter 290, Subchapter H**. Rules and regulations for community public water systems related to Consumer Confidence Reports (CCR). If you have questions about Subchapter H, call us at 512-239-4691 and ask to speak with the CCR coordinator within the Drinking Water Special Functions Section.
- **30 TAC, Chapter 291**. Rules and regulations for water utilities related to requirements for rates, capacity development, and Certificates of Convenience and Necessity. If you have questions about these requirements, contact the Public Utility Commission of Texas, Water Utilities Division at 512-936-7405.
- **30 TAC, Chapter 293**. Requirements for water districts. If you have questions about these requirements, call us at 512-239-1671 and ask for the Districts Section.
- **30 TAC, Chapter 325**. Requirements for licensing of water works operators. Our Operator Licensing Division can answer questions about these requirements at 512-239-6133.
- **30 TAC, Chapter 30**. Requirements for laboratories used by public water systems. If you have questions about lab accreditation, contact our Quality Assurance Section at 512-239-5420.
- **Title 2, Texas Water Code, Water Administration, Subtitle D, Chapters 32 and 33**. Requirements for water well drillers. If you have questions about these regulations, call 1-800-803-9202 or 512-463-8876.

Regulations for Water Haulers, Bottlers, And Vendors May Apply

There are additional regulations for bottled and vended water at facilities such as water haulers, water bottlers, water vendors, restaurants, day cares, hospitals, and other entities that may own or operate PWSs. We strongly recommended that you review the Texas Health and Safety Code, Chapter 431 and Title 25 of the Texas Administrative Code, Chapter 229, Subchapter F to determine whether these regulations apply to your PWS.

Who Can Answer Questions About These Rules?

If you have questions about the rules described in this guidance manual, give us a call at 512-239-4691 and ask to speak with our Drinking Water Special Functions Section.

How Can I Get Copies of TCEQ Rules?

For an understanding of how you can obtain copies of rules see our publication GI-032 Obtaining TCEQ Rules at <www.tceq.texas.gov/assets/public/comm_exec/pubs/gi/gi-032.pdf>.

Chapter 1. Introduction

Who Must Have a Monitoring Plan?

All PWSs must have a monitoring plan that is composed in a single document[1].

If your system treats surface water (SW) or groundwater under direct surface water influence (GUI), you must send us your monitoring plan for review and approval. You must revise it and send it in again every time your sample sites or monitoring frequency change. However, if we have a full monitoring plan sent since the revision of the total coliform rule only the revised section(s) may be sent in.

If your system treats groundwater or purchases treated water, you must develop a monitoring plan, but you do not have to send it to us unless we ask you to. During any Comprehensive Compliance Inspection (CCI), our investigator will review your monitoring plan, and our sampling contractor will look at it when they collect chemical samples at your site.

If your system purchases water, you need to coordinate with your wholesaler. You must make your monitoring plan available to other systems that provide or receive water from you, as needed. If you employ an operating company, you must give them a copy of your monitoring plan and be sure that they are following it.

When required (see Table 1.1.), you should send your monitoring plan to:

ATTN: Monitoring Plan Coordinator
Drinking Water Special Functions Section, Mail Code 155
Texas Commission on Environmental Quality
PO Box 13087
Austin, TX 78711-3087

Table 1.1. When to Prepare and Send Your Monitoring Plan

If your system . . .	Then you should send your Monitoring Plan to the TCEQ . . .
Treats SW (or groundwater under its direct influence)	You should send it to the TCEQ whenever it is revised.
Treats or distributes only groundwater or purchased water	You should send it to the TCEQ if we ask you to.

[1] This requirement was expanded in October 2000 in response to the Stage 1 Disinfectants and Disinfection Byproducts Rule (DBP1). Previously, systems were required to keep track of their sample sites and frequency but were not required to put their sampling documentation together in one document. This guide in its current version is updated to help guide systems through the monitoring plan template and include any necessary attachments where the document in its entirety can be deemed as administratively complete.

What Is a Monitoring Plan?

The monitoring plan is a tool to help you coordinate all the monitoring requirements for different chemicals in the plant and distribution system.

It is like an operations and maintenance manual for sampling. The information that must be included in the monitoring plan is information your system should already have on hand.

The first step in developing your system's monitoring plan is gathering the existing documentation you have for sample sites, such as address lists for lead and copper or coliform sampling, maps of your system, etc.

By having an up-to-date monitoring plan, your staff can easily refer to sampling requirements and pass this information on to new employees. In addition, the monitoring plan will help you communicate with us and our sampling contractor.

What Does This Guide Cover?

This publication is intended to cover all areas of compliance monitoring and sampling for potable water, so that you can:

- Develop a monitoring plan for your PWS.
- Include any necessary attachments with your monitoring plan.

Following the guidance in this version (January 2019) of this publication[2] will help you ensure that the plan you develop has everything it needs for us to consider it administratively complete. This version is based on the most up-to-date PWS regulations.

About Appendix A

The first appendix, Appendix A, contains a guide specific for completing our monitoring plan template. The template is not a requirement for you to fill out, but it is a resource available to those who choose to use it either for their overall monitoring plan or for guidance purposes.

What Has Changed Since the Last Version?

Several rules, such as the Disinfectant Byproducts Rule, the Total Coliform Rule, and the Long Term 2 Enhanced Surface Water Treatment Rule, have been revised or entered a new stage of compliance since the last version of this regulatory guidance. New sections added to the January 2019 version of this publication:

- Chapter 2: explains the difference between the types of contacts a PWS may have.

[2] If you followed the 2011 instructions for your monitoring plan, we strongly recommend that you use the new template and update your monitoring plan to follow rules revised since then. As long as your plan includes all of the required information, we may approve monitoring plans that follow the old format as being in compliance.

- Chapter 6: guidance for the Revised Total Coliform Rule (RTCR) which took effect as of April 1, 2016. This chapter includes key information and examples for staying in compliance with new requirements, such as selecting repeat sampling sites for each routine sample location.

Instructions for Completing the Template

The first half of this guidance has general instructions for completing the monitoring plan template and a summary of rule requirements. The instructions in this guide are organized in the same order that the monitoring plan template is organized:

- Chapter 2 covers the points of contacts required for your PWS.
- Chapter 3 describes the information you need to include on the physical details that make up the system, following the flow of water from raw sources to the distribution system.
- Chapter 4 covers all sampling under the Surface Water Treatment Rule (SWTR). SWTR does not apply to groundwater and purchased-water systems.
- Chapter 5 describes the sampling requirements for the Groundwater Rule (GWR). This rule does not apply to surface water and GUI systems.
- Chapter 6 describes sampling requirements for the Revised Total Coliform Rule (RTCR) and the disinfectant monitoring records.
- Chapter 7 describes inorganic, organic, and radionuclide compliance sampling taken on behalf of your system. The chapter covers all possible analytes and analyte groups that may be sampled.
- Chapter 8 covers sampling requirements for disinfectants and disinfection byproducts, including the Stage 2 Disinfection Byproducts Rule (DBP2) along with other byproducts formed through the disinfection process. This sampling does not count toward transient systems' overall compliance.
- Chapter 9 discusses sampling requirements under the Lead and Copper Rule (LCR). The sampling described does not count toward overall compliance for transient systems, or wholesale systems with no residential connections.
- Chapter 10 covers the Lab Approval Form and the information you need to include to receive approval from us. The Lab Approval Form is required for all PWSs, excluding raw water wholesalers (i.e., a system selling raw water that does not provide any form of treatment).

Both the guidance and the monitoring plan cover the full spectrum of water age—from the raw water through the treatment processes to the distribution system.

Follow the guidance provided in the monitoring plan template to determine all rules that apply to your system, as well as those that do not apply to your system. There is a table on page 3 of the template to assist systems in determining which rules may apply to their system based on source water and service type.

The rule requirements summarized in this guidance document and in the template are from 30 TAC, Chapter 290, Subchapter F.

Glossary

The glossary defines commonly used terms, abbreviations, and acronyms used in this guidance.

We Are Here to Help

If you have questions about the monitoring plan, the rules that apply to PWSs, or sampling, please call us at 512-239-4691 or email <PDWS@tceq.texas.gov>.

Four Concepts: Sources, Plants, Entry Points, and Distribution Systems

The monitoring plan follows the water through the system, and uses these four items, or concepts, to track where it is going:

1. **Sources.** Sources can be owned or purchased, wells or surface water, potable or raw.
2. **Plants.** Anywhere the water quality is changed may be identified as a plant. Every source must have a plant associated with it, as all raw water must be treated at some point to make it potable.
3. **Entry Points.** An entry point is any point at which water from a plant flows to a distribution system. Every entry point must be connected to one or more plants.
4. **Distribution System.** A distribution system is where consumers get potable water and may be broken into pressure planes. Sometimes, a single system will operate separate, disconnected distribution systems.

Figure 1.1 shows some simple, typical arrangements of sources, plants, and entry points. For many systems, these relationships are much more complicated. Therefore, in addition to the lists of sample sites that are still required, we have modified the format of the entry point requirements to better describe how water flows through a system.

Figure 1.1. Some Typical Combinations of Sources, Plants, and Entry Points

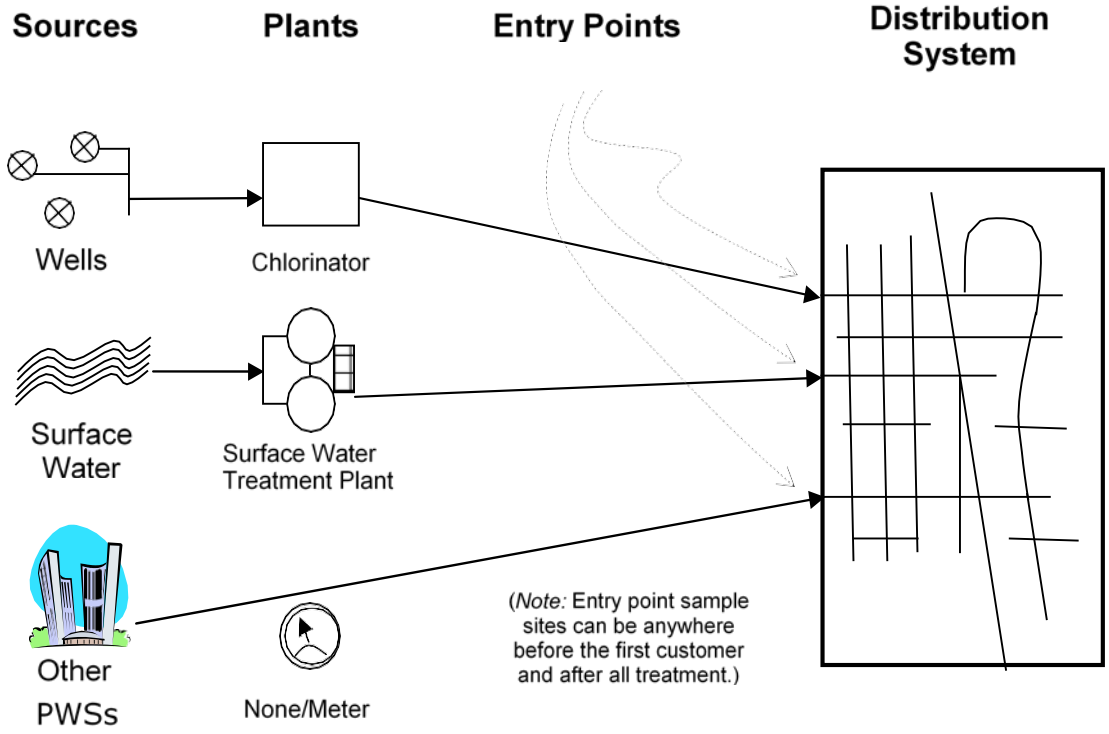

You can view the data that we have for your system's sources, plants, and entry points on our website through Drinking Water Watch at <www.tceq.texas.gov/goto/dww>. You can also view the points of contact, sampling schedules, sample results, and violations.

A PWS does not always have all four concepts: a source, plant, entry point, and distribution system. However, we regulate all PWSs because a failure in any one area could create a risk to public health, and because that is how the federal rules are structured. They all need some kind of monitoring plan; the complexity of the monitoring plan depends on the complexity of the system. Examples of PWS in Texas that do not have all four concepts include:

- "Distribution only" PWSs that purchase and redistribute potable water from a different PWS that does all of the water treatment.
- Treated-water wholesalers that have a source of surface water and a large surface water treatment plant, but do not provide water directly to any retail connections.
- Raw water wholesalers that only operate wells or surface water intakes.
- Systems that operate as "water-haulers," buying purchased water from one system and transporting it downstream for sale to another system, without providing water directly to any houses or other retail connections.

Wholesalers and Consecutive Systems (Providers and Receivers)

Many PWSs buy or sell potable water. Others have interconnections but no sales agreement. Our rules require that a monitoring plan represent the entire system, including both wholesalers and purchasers.

Therefore, people who have a relationship like this must share monitoring plans as needed.

- *Wholesalers.* The EPA defines wholesalers as PWSs that send any water downstream for redistribution. Some wholesalers do not have their own retail connections, but many do. Wholesalers must provide their receivers with data for CCRs, any required public notices, corrosion control studies, and their monitoring plan, as needed.
- *Consecutive systems.* The EPA defines a consecutive system as a PWS that receives some or all of its finished water from other systems. Thus, any entity that meets the definition of a PWS and is not part of their provider's monitoring plan is a consecutive system. The other term frequently used for a consecutive system is "purchased-water system." Consecutive systems must provide their wholesaler(s) with a copy of their monitoring plan, as needed.

Choosing Sampling Sites

As you develop your monitoring plan, you may find that certain rules, such as the RTCR or LCR, contain the possibility of sample locations changing on a regular basis. If changes need to be made, we encourage you to send in the correct forms indicating these changes as soon as possible and before any future sampling event within that respective program takes place. See the respective program section for details on how to update your sites.

Many PWSs are growing. As your system grows, you will need to update your sampling sites to take into account new connections and new sources. When you do this, you may want to check with us to make sure you understand the site location requirements. In most cases you are required to notify us when you change sample sites. There are special rules about where sample sites must be located. This guide covers those rules briefly in each chapter. The Public Drinking Water Section can help you figure out where to locate your sampling sites, call us at 512-239-4691, or email us at <PDWS@tceq.texas.gov>.

Chapter 2. PWS Points of Contact

You must identify staff to serve as the point of contact for these key positions at your PWS:

- Administrative
- Owner/Legal
- PWS

The number of unique contacts at a particular PWSs typically scales in relation to the population served by that system. For instance, a large city may have each position filled by a different person, and they may even have several people helping to fill one role; while a small transient system may have one person who runs the entire system – filling all the point of contact roles.

Be sure to notify us anytime your points of contact change since we rely on this information to mail letters, contact your PWS with questions, etc.

How Do I View and Update Points of Contact for my PWS?

Use the Drinking Water Watch at <www.tceq.texas.gov/goto/dww> to view your current points of contact.

To update your points of contact, email the Drinking Water Inventory and Protection Team at <PWSINVEN@tceq.texas.gov>.

Administrative Contact

Your administrative contact is the most important point of contact at your PWS. This person should be the highest-ranking official associated with the PWS, such as a mayor, president, or director.

We send all correspondences to the administrative contact at your PWS, so it is imperative that you keep this information up-to-date.

Though not preferred, it is acceptable for one individual to have multiple roles assigned to them. However, the highest-ranking official must be your administrative contact. The other contact roles can be filled by the person of best fit.

Owner/Legal Contact

The owner or legal contact:

- Can be a corporation or association, rather than one person
- Could be different than the administrative contact, depending on system size and setup

A good example is a city or a business. The legal owner of the city's water system is simply the city itself while the company, even though only the president may be the administrative contact, is the legal entity responsible for the water system.

PWS Contact

The PWS contact should be a licensed operator for all 1) community systems and 2) NTNC systems.

Since a transient system does not have to have a licensed operator take samples or operate the system, their PWS contact can simply be someone who we may contact at any given time. This contact needs to be familiar with all rules and regulations in the event they are contacted with questions about their system.

Chapter 3. PWS Details

To assist with sampling locations, we request that you list the specifics detailing water flow in your system, starting with its source of origin (raw water or interconnect) up to the first connection, in the blank spaces provided in the template to complete your monitoring plan.

You can view all water system facilities listed for your system through the Drinking Water Watch at <www.tceq.texas.gov/goto/dww>. Any updates that differ from our database should be sent to the Drinking Water Inventory and Protection Team at <PWSINVEN@tceq.texas.gov>.

The rest of this chapter outlines the information you should include for each respective part of your system.

Sources

The three possible source types (wells, surface water intakes, and interconnects) are associated with an assigned TCEQ ID once they: (1) are activated as an in-use source, or (2) have been given approval to use the source by us. See Appendix A for examples of listing your sources.

A source ID is paired with a particular source for an infinite amount of time, meaning the two remain paired even if the source becomes inactive. Future sources of the same type brought online are given a sequential source ID number, and that source ID remains indefinitely.

Inactive sources do not have to be listed in your monitoring plan; however, if you do include them, be sure to label them as inactive so there is no confusion to whether or not the source is actively contributing to your water system.

If you receive water from another water system in any capacity, list the name of the selling system and give details about the meter's location, type of water, and if the water has been treated beforehand.

Water Treatment

Raw water must be treated with effective disinfectants to protect public health.

Not every system will add disinfectant themselves, but every system's water must be treated at some point. For example, wholesaling systems might sell:

- Raw water to customers, leaving the receiving systems to treat the water before it reaches their respective customers.
- Treated water to customers, leaving the receiving system free to not add any disinfectant if the contract agrees to those terms and the residual meets minimum standards throughout the receiving system.

You must identify the treatment plants, or chlorination facilities, at your PWS, and show which source(s) each plant or facility treats.

You can add additional treatment plant tables if you have more than one plant or treatment injection points. Systems that adhere to the requirements of the Surface Water Treatment Rule (SWTR) should complete this subsection identical to their approved contact time (CT) study. Though groundwater and purchased-water systems do not have CT studies the disinfection process should still be listed in sequential order.

Entry Points

A PWS entry point is any location occurring after treatment, but before the first connection within the distribution system.

Your entry point(s) are the same location(s) where samples are taken from when our contractor collects compliance samples. They are usually on the outside tap of a ground storage tank, at clearwells, or the lab sink of a treatment facility. For PWSs that are strictly for wholesale purposes, the entry point is simply the point at which the receiving system takes water.

Keep in mind that it is possible for a system to have multiple sources with only one entry point, or one source with multiple entry points. A new entry point needs to be established whenever treated water enters the distribution system at a location not previously used to reach customers.

Water Storage Facilities

Systems may use storage facilities before, and throughout the distribution system, to aid in water capacity. These facilities are storage facilities:

- ground storage tanks
- elevated storage tanks
- clearwells
- elevated ground storage tanks
- standpipes
- pressure tanks

Associate each storage facility to its respective contributing source(s) as best you can in your monitoring plan.

Distribution System Details

Pressure Planes

Not every system operates more than one pressure plane. The smaller the system, the more likely that there is only one pressure plane.

Another major factor that plays a part in this determination is change in elevation throughout your distribution system. Pressure planes are hydraulically separate areas of a PWS. Separate areas may exist for various reasons, including:

- Geography—like hills or rivers that split the system.
- Separate communities are combined into one system, with one PWS ID.
- Major roads or other infrastructure that divide the system.

You can select “No” in Section D.3 of the monitoring plan template if you only have one pressure plane.

If you have more than one pressure plane, list details about how each plane relates to each entry point and other pressure planes.

Booster Disinfection

One common problem larger systems have is maintaining the level of their disinfectant residual from the entry point through the end of their system.

Booster disinfection in systems with large distribution systems ensures a proper residual and protects all connections from pathogen vulnerability.

If your PWS uses booster disinfection, list whether chloramine or gas chlorine boosting is performed. The order of processes for boosting already treated chloraminated water should be adding ammonia followed by chlorine – use the opposite order when treating raw water.

Wholesaling

List any PWSs that receive water from your system, including all pertinent information, in the appropriate section of the template. You should list all systems that receive water from your PWS – even if it is only for emergency purposes.

If this does not apply to your system you can select the appropriate option in the monitoring plan template.

Chapter 4. Surface Water Treatment Rule

This chapter covers all sampling under the Surface Water Treatment Rule (SWTR) from 30 TAC Section 290.111. This rule does not apply to groundwater and purchased-water systems, who may exclude this section from your monitoring plan.

Every PWS sampling under the SWTR rule must have (1) a raw water sampling location for a surface water source, and (2) a sample tap on each well if applicable. These sources and sampling locations must be listed in your monitoring plan. Required testing outlined in Table 4.1.

Table 4.1. Required Testing

If Your System Treats	Required Test	What to Test
SW or GUI	Cryptosporidium or E. coli monitoring	Raw water (all surface water intakes)
SW	TOC	Raw water

The Long Term 2 Enhanced Surface Water Treatment Rule (LT2) requires systems that treat SW (or groundwater under the direct influence of surface water) to complete Cryptosporidium or E. coli monitoring at all surface water intakes. The type of sampling depends on the size of the system.

All water systems that treat SW are required to collect total organic carbon (TOC) samples from their raw water. The discussion of TOC samples is included later in this Chapter. The raw water TOC sample is collected as part of the TOC sample set that includes a treated water sample.

For SW treatment plants and plants treating GUI, the entry point schematic attached to the monitoring plan template must include a description and diagram showing where chemicals are injected and where chemicals or water quality parameters are monitored.

Nonregulatory Samples

It is a good practice to take more samples than the rules require. Keep in mind that the rules are minimum requirements, but additional sampling may help you determine how well your plant is working and you can use the sample results to make operational decisions about how to run the treatment process.

You are not required to describe nonregulatory sampling in your monitoring plan[3]. If you choose to include nonregulatory sampling you should note that it is **not** for compliance sampling.

[3] That information should be included in your operations and maintenance manual.

Disinfection Zones (30 TAC 290.111)

A description of the disinfection zones at your PWS is one of the most important parts of the monitoring plan for surface water treatment plants.

A disinfection zone is a segment of the treatment process that begins at a disinfectant application point and ends at the next downstream disinfectant application, or residual, sampling point. Each disinfectant application point, regardless of the frequency of use, represents the beginning of a separate disinfection zone. Refer to your PWS's CT study to identify your plant's disinfection zones. Every surface water treatment plant must have a current, accurate, and approved CT study. If you have questions about CT studies, contact us at 512-239-4691 and ask for the Technical Review and Oversight Team.

If your system is subject to the SWTR, you must perform sampling within each disinfection zone to demonstrate that appropriate disinfectant levels are being maintained. Measure the disinfectant residual, pH, temperature, and flow rate of the water in each disinfection zone at least once a day when peak hourly raw water flow rates occur.

Examples of chemicals you may use for treatment in disinfection zones include:

- disinfectants (chlorine, chloramine, chlorine dioxide)
- taste and odor control (powdered activated carbon, potassium permanganate)
- coagulants (alum, polymer, ferric)
- pH adjustment (caustic, lime, various acids)
- softening (lime)
- corrosion control (orthophosphates, silicates)
- fluoride

Examples of things that may need to be monitored at the plant include:

- disinfectant residual (for each disinfection zone)
- pH (for each disinfection zone)
- turbidity (combined filter effluent turbidity and individual filter turbidity)
- fluoride residual
- disinfection byproduct precursors (total organic carbon)
- free ammonia (for systems that use chloramines)

Examples of Treatment Tables for a Plant

If your PWS treats water, you should include a table of treatments in your monitoring plan. Provide a table for each separate treatment plant. Table 4.2 shows the information that must be captured in the treatment table. If the system treats surface water (or GUI), you can expect this table to be long, because it needs to show all chemical addition points and disinfection zones. Table 4.3 gives an example for an average surface water treatment plant.

Table 4.2. Treatment Table Field Definitions

Treatment Sequence	Treatment
Number the treatments in the order they are applied to the water. In other words, list the chemicals applied to raw water before those applied to finished water.	List the added chemical, or the process used at the physical unit. • You don't have to list pumps, since those don't change the drinking water quality. • You only need to list storage if it is used for disinfectant contact time (CT).

Table 4.3. Example of a Treatment Table Used at a Surface Water (or GUI) Treatment Plant

Disinfection Zone	Treatment Sequence	Treatment
1	1	Gaseous chlorination(pre)
1	2	Activated carbon (powdered)
1	3	Alum (coagulant)
1	4	Polymer (coagulant aid)
1	5	Sedimentation
1	6	Media filtration
2	7	Gaseous chlorination (post)
2	8	Ammonia injection
2	9	Ground storage tank
2	10	Fluoridation

You must also include plant schematics in your monitoring plan for (1) in-plant sampling and (2) water flows. You can include both formats in one schematic, as long it includes all information required for the plant schematic. The minimum requirements for what a plant schematic needs to include can be found in 30 TAC 290.121(b)(1)(A) and on page 4 of the monitoring plan template.

In-Plant Schematic

Figure 4.1 is an example of the in-plant sampling schematic for a surface water treatment plant. Figure 4.2 shows what a plant schematic may look like when a system uses chloramines in the treatment process.

Water Flows Schematic

Additionally, your monitoring plan should include a schematic that shows how water flows in and out of the system as a whole—not necessarily an actual map, and not necessarily drawn to scale. Figures 4.3 and 4.4 show some acceptable entry point schematics for two different PWS setups: one where water blends together before reaching customers and one where it remains separate entering the distribution system.

Figure 4.1. Example of a Plant Schematic for a Surface Water Treatment Plant (SWTP) Showing Pumps, Flow Meters, Injection Points, Sampling Points, and Disinfection Zones

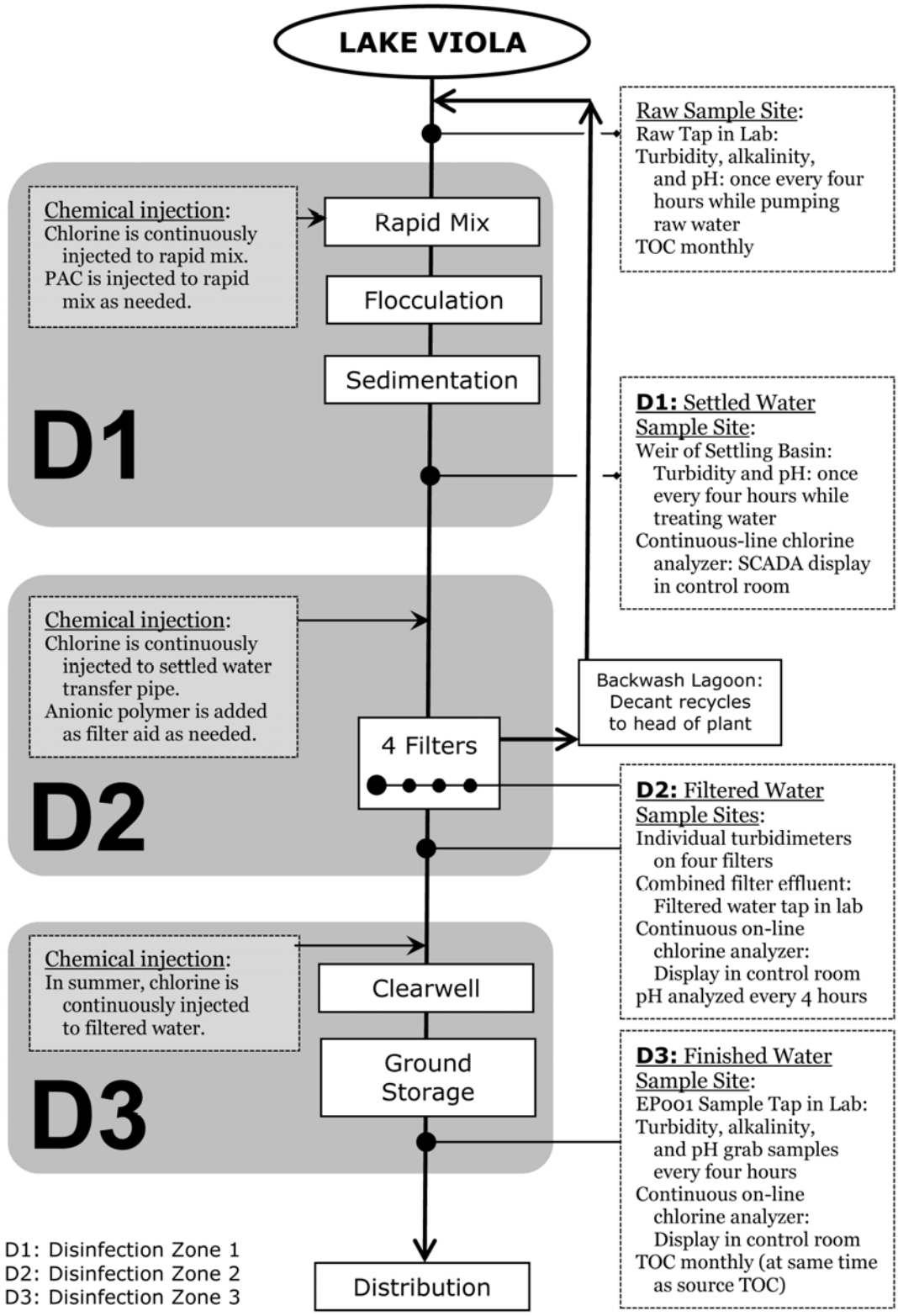

Figure 4.2. Example of a Treatment Sequence for Chloramination

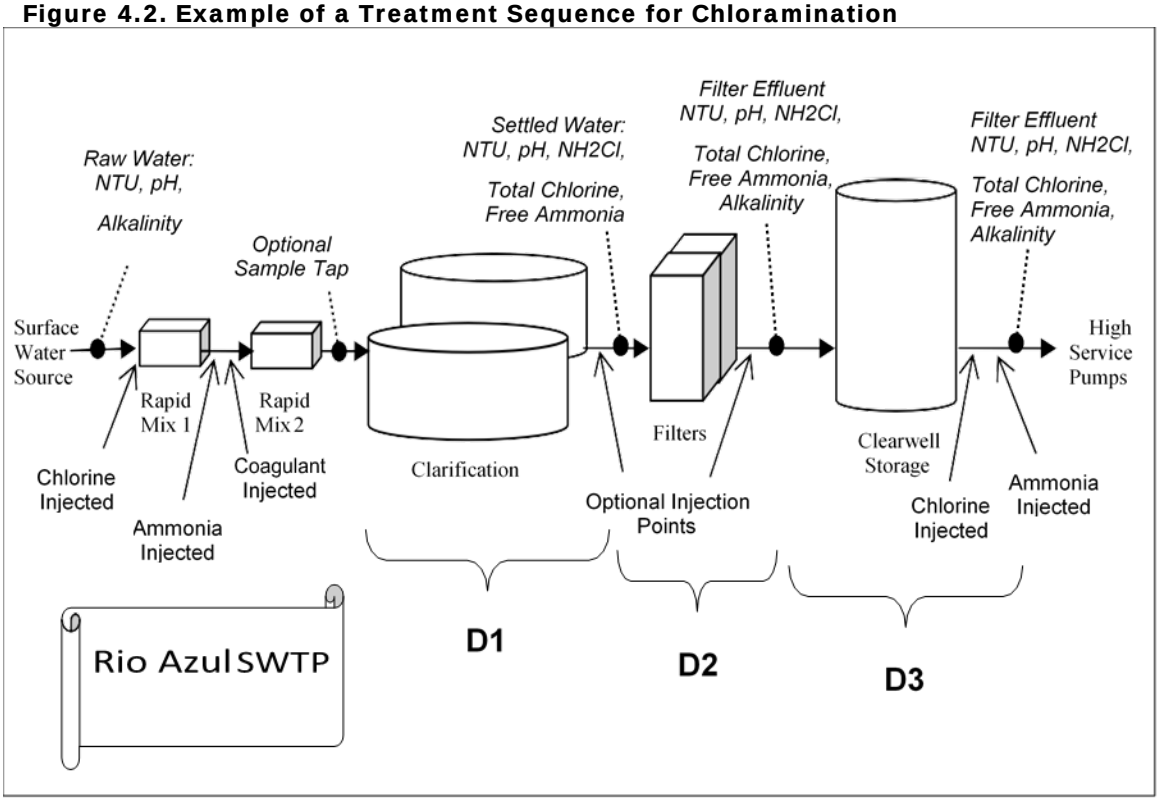

Figure 4.3. Distribution Schematic for a PWS with Multiple Sources and One Entry Point to the Distribution System

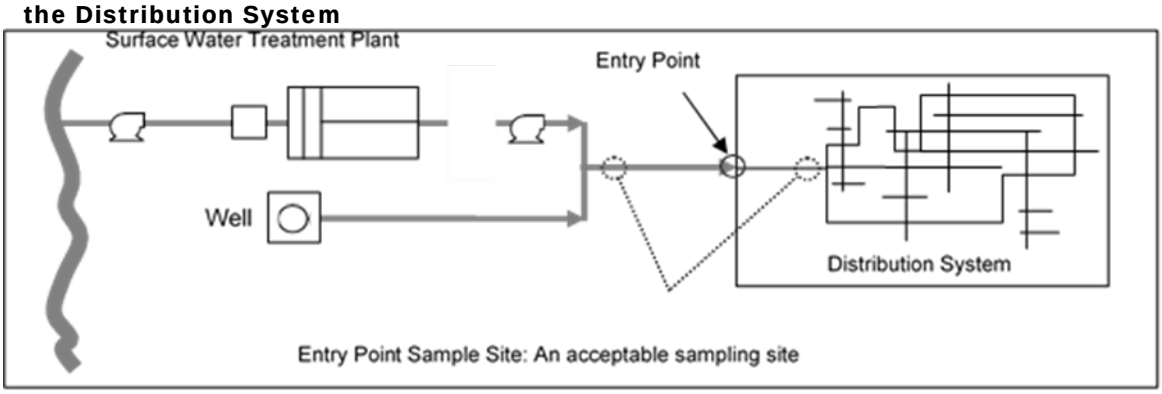

Figure 4.4. Distribution Schematic for a System with Multiple Sources and More than One Entry Point

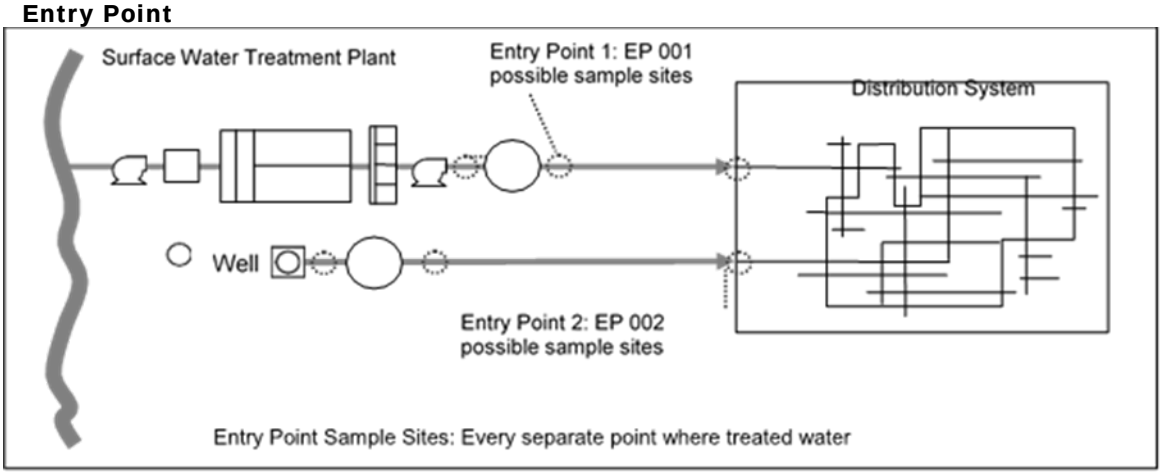

Combined Filter Effluent Turbidity for SWTPs (30 TAC 290.111)

If your system's treatment plant treats any raw surface or GUI water (SWTP), you must demonstrate that the treatment process removes the required amount of turbidity, which is a surrogate measure for pathogens.

Location

Combined filter effluent (CFE) samples must be taken downstream of the point at which the water from all the plant's filters are combined. At most plants, the CFE sampling site is located where the water enters the clearwell, but it may be downstream of plant storage if it is not possible to monitor before storage. A location after the high-service pumps (but before any customer's tap) is acceptable if no better sampling location is available. If a plant monitors the CFE after storage the plant management must notify us of the CFE monitoring location.

Frequency

If your PWS serves fewer than 500 people, you must monitor the turbidity of the CFE at least once each day that the system serves water to the public.

If your water system serves 500 people or more, you must monitor the turbidity of the CFE at the appropriate sampling point(s) at least every four hours that the system treats water. The specific times when CFE readings are to be taken when the plant is online must be identified in the monitoring plan.

Help with Surface Water Monitoring and Reporting

For more information about surface water monitoring and reporting review our Monthly Testing and Reporting at Surface Water Treatment Plants (TCEQ publication RG-211) guidance.

If you have questions about where to locate sampling points, contact us at 512-239-4691 and ask to speak with our Surface Water Treatment Rule Team.

Individual Filter Effluent Turbidity for SWTPs (30 TAC 290.111)

You must demonstrate that each filter is operating properly at SWTPs and GUIs. The performance of an individual filter is evaluated based on the turbidity level of that specific filter.

Location

Each individual filter.

Frequency

All individual filters at your PWS must:

- Continuously monitor the filtered water turbidity at the individual filter effluent (IFE) of each filter and record the turbidity value at least every 15 minutes.
- Measure and record the turbidity at the IFE at least once each day the plant is in operation while continuously monitoring the turbidity of the combined filter effluent (CFE) and recording the turbidity value at least every 15 minutes[4].

Note on Membranes

Systems that use membranes must use a method approved by the executive director to continuously monitor the quality of the water produced by each membrane unit and record the results at least once every five minutes.

[4] It is possible for some smaller surface water treatment plants to be allowed to operate without a turbidimeter on each filter - monitoring CFE in lieu of the IFE turbidity. The system must meet all five of the provisions set forth in 290.42(d)(11)(E)(ii) which are highlighted below:

1. The public water system operating the plant must serve fewer than 10,000 people including those served through wholesale connections.
2. The plant must have no more than two filters.
3. The filters must have been constructed prior to October 2000.
4. The filters must not have (and may never have had) IFE turbidimeters.
5. The plant must have a CFE turbidimeter installed prior to the clearwell.

Entry Point Disinfectant Residual (30 TAC 290.110 and 290.111)

An entry point is any point where a treated source of water enters the distribution system. You must have a sample site for every entry point.

The sampling site for the entry point does not have to be at the same location as the entry point itself. What is necessary is that the water collected at the entry point sampling site be representative of the water at the actual entry point. This water should represent what customers are drinking—in terms of materials such as iron or arsenic that don't decay over time.

There can be some confusion because the sampling site where the entry point sample is collected can vary, depending on the system. For example, the site may be at a wellhead, or it may be at the end of a long transfer pipe before the first customer. Entry point samples might be taken at a plant, at a well pump station, at a storage tank, or at clearwells. The sampling site should always be after treatment (and preferably after storage), but before the first connection.

Your existing entry points should already have numbers assigned to them, and you should already have sampling sites. Entry point numbers are assigned to treated water from a single plant, a well, a well field, a spring, or a purchased-water source that enters at a specific place in distribution.

If you add a new potable water source that feeds into your distribution system separate from any existing location(s), you need a new entry point number assigned by us.

Once an entry point number has been assigned, it will be associated to that source of water no matter what happens to the source. If a source of water is abandoned, the entry point number may also be inactivated unless another source of water runs through that same entry point.

For example, if you have an old Well 1 associated with EP001, and you abandon it, the number EP001 will also be abandoned unless fed by another source. It is like retiring a football player's number. If you drill a new well with its own chlorinator, feeding the distribution system at a new point, the new well would be numbered EP002.

Only entry points from operational wells, demand wells, or treatment facilities are required to be monitored. If a well or treatment facility is not used to produce potable water—for example, an irrigation well—you don't need to sample the water that it produces. You are responsible for ensuring that our data reflects the correct status of water sources and entry points associated with the PWS under your control. Updates concerning your system can always be sent to the Drinking Water Inventory and Protection Team at <PWSINVEN@tceq.texas.gov>.

Example of Multiple Sources or Plants with One Entry Point

Sometimes water from multiple wells or water treatment plants blends together before reaching the distribution system. In this case, even though there are multiple sources of water, there is still only one entry point and therefore only one sampling site.

Example of Entry Point Numbering

Entry point numbering is very important to the monitoring and reporting requirements for a PWS. The numbering of the entry points represents a specific sample location and source. This numbering should not be changed by the PWS without approval from our Water Supply Division.

As an example, say you have a well and a surface water treatment plant that both feed an entry point that is numbered EP001. If you abandon the well, but not the treatment plant, you should still label that entry point EP001. Even if you then drill a new well, if this new well also feeds entry point EP001, there is still no need to change the monitoring plan.

However, if you connect this new well into the system at a new entry point, we will assign the next entry point number—in this case, EP002. You will be communicating with us when you add the new well; make sure you get the new entry point number and update your monitoring plan accordingly.

In any case, you should keep a record of the unused well so that future operators can understand the chain of events.

Example of Multiple Sources with Multiple Entry Points

If there are multiple wells or water treatment plants that send water to the distribution system at different places, these are multiple entry points (see Figure 4.3). In this case, a sampling site must be designated for each entry point, and the monitoring plan must include a clear description of the location of each sampling site and which water source it represents. It is important that all sources of water, including purchased water, be identified.

Frequency

A SW or GUI system must measure the disinfectant residual at the entry point continuously if it meets either of the two following criteria:

- Serves more than 3,300 people.
- Provides water wholesale (to any number of customers).

A system that serves fewer than 3,300 people (and does not sell water wholesale) must also measure the disinfectant residual but can do it either continuously or by grab sample. If you are using grab samples, refer to Table 4.4 for the number of grab samples that must be collected as a function of system size.

The samples should be taken at intervals during the time the plant is in operation, not all at the same time. If the residual is low in one sample, you must test at four-hour or shorter intervals until the residual has been restored.

Table 4.4. Number of Disinfectant Residual Entry Point Grab Samples for SW and GUI Systems Serving Fewer than 3,300 People

If your system serves this many people	Then you must collect this many grab samples per day:
500 or fewer	1

If your system serves this many people	Then you must collect this many grab samples per day:
501 to 1,000	2
1,001 to 2,500	3
2,501 to 3,300	4

Sampling for Systems that use Monochloramine

Some systems, due to a number of factors, utilize monochloramine as a disinfectant in addition to or as a replacement for free chlorine. If your system uses monochloramine, you should include your Nitrification Action Plan (NAP) as an attachment to your monitoring plan indicating how you ensure that the correct ratio of chlorine to ammonia is applied.

See our guidance for assistance in drafting a NAP:

- NAP template at <www.tceq.texas.gov/goto/nap-template>.
- NAP guidance at <www.tceq.texas.gov/goto/nap-guide>.
- NAP summary at <www.tceq.texas.gov/goto/nap-summary>.

Total Organic Carbon for SWTPs (30 TAC 290.112)

Every SW or GUI plant must comply with the total organic carbon (TOC) monitoring requirements. Only systems that use coagulation, flocculation, and sedimentation followed by conventional media filtration must meet the removal requirements.

If you are required to comply with the TOC rules, use any of the methods described in our guidance, Total Organic Carbon (TOC) Guidance Manual (RG-379) available at <www.tceq.texas.gov/assets/public/comm_exec/pubs/rg/rg-379.pdf>.

Location

The raw water sampling point should be before any chemical addition. The finished water sampling location may be any point after sedimentation but before the first customer.

Frequency

You must take one TOC sample set for your system every month. The monthly TOC sample set consists of raw water alkalinity, raw water TOC, and treated water TOC. The samples should be taken during normal operating conditions and normal influent water quality. The raw water alkalinity and raw water TOC must be taken at the same time (within 5 minutes). The finished water TOC sample must be taken between 1 and 8 hours after the raw water samples were taken. You should only take your TOC sample set when the plant is operating at a steady state. Do not take a TOC sample set directly after changing chemical dosage water flow rates. Instead, wait at least an hour, until the plant has had a chance to even out.

Actual Contact Time: You have the option of sampling finished water at your PWS at a delay time equal to the actual hydraulic detention time, but you must request this option in writing, and explain the method or equipment you will use to calculate the sampling delay. However, you should first get approval from the Surface Water Treatment Rule Team at 512-239-4691.

You also have the option of taking additional TOC sample sets in a month. Reasons for taking multiple sets include a change in raw water conditions because of rain or use of a different raw water blend.

Even if you are meeting one of the alternate compliance criteria (ACC), you still must take a TOC sample set, and maybe some other samples, and report them every month. Table 4.5 gives summaries of the ACCs and their reporting requirements.

If your plant has a running annual average of treated water TOC of less than 2.0 mg/L for two consecutive years, you may reduce monitoring to one TOC sample set per plant per quarter. However, if the running annual average treated water TOC in a given quarter is greater than or equal to 2.0 mg/L, your system must go back to routine monitoring in the month following that quarter.

For more information on TOC, see the Total Organic Carbon (TOC) Guidance Manual (TCEQ publication RG-379).

Table 4.5. ACC Summaries and Reporting Requirements for Total Organic Carbon

ACC	Requirement	Monthly Sampling and Reporting
1	Raw water TOC < 2.0 mg/L	TOC sample set
2	Treated water TOC < 2.0 mg/L	TOC sample set
3	Raw water TOC < 4.0 mg/L (RAA), Raw water alkalinity > 60 mg/L as CaCO3 (RAA), TTHM ≤ 40 µg/L and HAA5 ≤ 30 µg/L	TOC sample set and quarterly TTHM
4	TTHM ≤ 40 µg/L and HAA5 ≤ 30 µg/L (free chlorine is only disinfectant used)	TOC sample set
5	Raw water SUVA ≤ 2.0 L/mg-m	TOC sample set plus raw water SUVA
6	Treated water SUVA ≤ 2.0 L/mg-m	TOC sample set plus treated water SUVA jar test results.
7	Treated water alkalinity < 60 mg/L as CaCO3 (RAA)	TOC sample set and treated water alkalinity.
8	Magnesium hardness removal >10 mg/L	TOC sample set and raw and treated magnesium.

Long Term 2 Enhanced Surface Water Treatment Rule (LT2) Requirements (30 TAC 290.111)

The LT2[5] applies to all PWSs that treat SW or GUI. These systems are required to monitor all surface water intakes for Cryptosporidium parvum or E. coli. The results of

[5] The EPA published the LT2 rule in the Federal Register on Jan. 5, 2006. The TCEQ adopted the LT2 rule on Jan. 4, 2008.

the sampling will determine if the source water has an elevated risk of Cryptosporidium. If elevated Cryptosporidium levels are found, a system is required to install additional treatment to reduce the risk of sickness from Cryptosporidium.

A system that treats SW or GUI must conduct at least two rounds of raw surface water monitoring at each surface water intake and at each GUI well. The purpose of the monitoring is to establish minimum treatment technique requirements for Cryptosporidium and other pathogens. We may waive the raw surface water monitoring requirements for a surface water intake or a well if the combination of pathogen removal and disinfection processes used to treat the raw water achieves at least a 5.5-log total removal and inactivation of Cryptosporidium.

Determining Raw Surface Water System Schedules for Existing Sources

An existing system should have undertaken two rounds of LT2 sampling. Scheduling for the LT2 requirements is based on the size of the system or the combined distribution system (CDS). A CDS is an interconnected group of systems. The groups in a CDS are based on the population of the largest single system in the CDS, not on the sum of the populations of the interconnected systems. These initial rounds of sampling should have been begun no later than April 1, 2019. If your existing system has not completed required LT2 testing please call us at 512-239-4691 and ask to speak with the LT2 program to discuss your systems requirements.

Table 4.6 is the raw source water monitoring schedule for SW and GUI systems. The schedule is based on the number of people served within a single system or CDS, if applicable (designated by the Schedule Number).

Table 4.6. Raw Source Water Monitoring Schedule for SW and GUI Systems

Schedule Number	Systems that are not part of a combine distribution system and serve…
1	at least 100,000 people
2	from 50,000 to 99,999 people
3	from 10,000 to 49,999 people
4	fewer than 10,000 people and monitor for E. coli
4	Fewer than 10,000 people and monitor for Cryptosporidium

Determining Raw SW System Schedules for New Sources

If a new well or surface water intake is installed, you must submit a proposed monitoring schedule for a first round of LT2 source water monitoring. This schedule for the first round of raw surface water monitoring must be submitted no later than three months after the new source is placed in operation.

Raw Surface Water Sampling Plan

You must submit a proposed raw surface water monitoring plan for your system upon request. We send a package of information for your system that must be completed and returned before the due date for the sampling plan. The sampling plan must do **all** of the following:

- Identify all of the system's surface water intakes and wells.
- Provide the location of each raw water sampling point.
- Include the parameters that will be monitored.
- State the frequency and dates that samples will be collected.
- Specify the laboratories that will perform the analyses.

Surface water samples must be collected from the raw water line prior to any treatment and before the first point where a recycled stream is returned to the treatment process. You should submit the drawing from the system's monitoring plan.

Raw Surface Water Sampling Frequency

You must also submit a detailed schedule of when the samples will be taken. The frequency and length of sampling depends on the size of the system.

Schedule 1, 2, and 3 systems must monitor turbidity, E. coli levels, and Cryptosporidium levels in the raw water at least once a month for a period of not less than 24 consecutive months.

Schedule 4 systems that choose to not monitor for E. coli will be required to monitor for Cryptosporidium. Schedule 4 systems that choose to monitor for E. coli must take samples at least once every two weeks for a period of not less than 12 consecutive months (26 samples total). If E. coli levels do not exceed triggers, these Schedule 4 systems will not be required to monitor for Cryptosporidium. If E. coli levels exceed triggers, these Schedule 4 systems can choose to monitor for Cryptosporidium either twice a month for one year or once a month for two years.

The method of coliform monitoring for Total Coliform Rule compliance is different from this method.

Chapter 5. Groundwater Rule

Every system is required to have a raw water sample tap on each well per 30 TAC 290.41(c)(3)(M). Each source and sampling location must be listed in your monitoring plan even if used for only emergency or seasonal purposes.

Some water systems are required to take monthly coliform samples of their raw water. The GWR requires all PWSs to perform raw water sampling following any positive routine distribution system coliform sample. If a system develops a Triggered Source Monitoring Plan (TSMP) describing the sources that feed each distribution sample site, and we approve it, then the follow-up monitoring can be limited to the well(s) feeding that distribution site. The TSMP can also identify representative wells if the system contains multiple wells in close proximity and constructed in a similar manner (i.e. well depth, annular cementing, screen location, etc.).

Groundwater Rule Requirements

The GWR applies to all PWSs, including TNC water systems, community systems, and NTNC systems that provide groundwater.

Under the rule, if you get a positive result for total coliform in any routine distribution system sample, you must:

- Sample every well feeding that distribution system within 24 hours.
- Analyze the samples for total coliform and E. coli bacteria.

Triggered Source Monitoring (TSM) is a one-to-one relationship between positive distribution samples and required raw well TSM samples. All wells in use when a positive coliform sample is found in the distribution system must be sampled for coliform as well. For example, you:

- Must take four raw water samples if your system has two wells that receive two routine distribution positives (both wells sampled for each positive sample).
- Do not have to sample a well if that well was not in use at the time of the routine distribution positive. However, you must provide documentation to us, such as a well production log, so that the well will not be scheduled for the required TSM.

These sampling requirements also apply to purchased-water sources. Include the contact information for any systems that supply you with potable water in your monitoring plan.

You must notify wholesaling systems within 24 hours upon knowledge of a distribution system positive sample for the receiving system.

However, sampling can be limited to fewer wells if you have a TCEQ-approved TSMP [290.109(c)(4)(B)(ii)]. For more information on submitting a TSMP, contact us at 512-239-4691 and ask for the Groundwater Rule Team.

Wells Not Continuously Used

Sometimes, a system that has several wells will not use all the wells all the time. For example, in Figure 5.1, the well that feeds EP 002 is not always connected to the distribution system.

The monitoring and sampling requirements for this well depend on whether it is an emergency source or a demand source. You may choose to not monitor emergency water sources; however, demand sources must be included in your routine monitoring plan.

Figure 5.1. Distribution Schematic for a System with Wells that Are Not Continuously Used

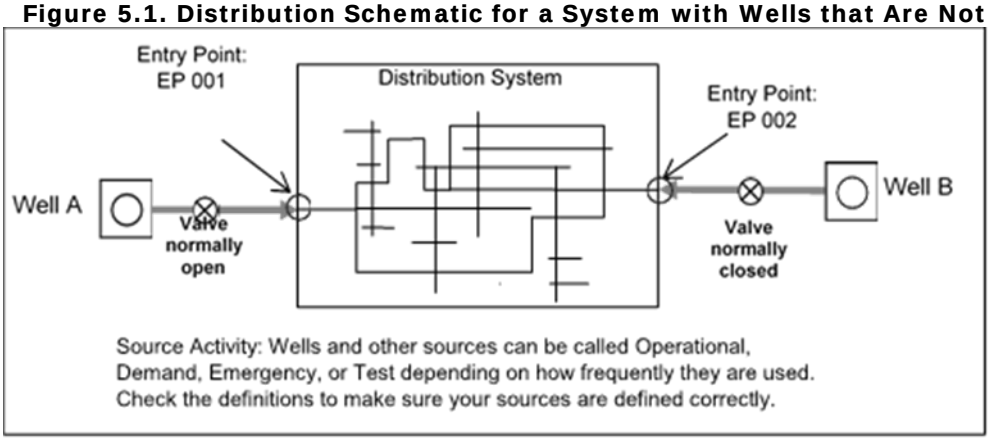

New Wells

Before a new well can be approved to provide public drinking water, you must collect and analyze coliform and chemical samples to make sure the well water meets all drinking water standards.

Call us at 512-239-4691 and ask to speak to the Plan Review Team to learn about design or construction requirements for new drinking water wells. You can also ask for the Drinking Water Quality Team or email <PWSCHEM@tceq.texas.gov> to learn about sampling requirements for new wells.

Triggered Source Monitoring

A TSMP is never required but can be very useful for systems containing multiple raw wells. If approved, systems with more than one groundwater source may conduct triggered source monitoring at a representative groundwater source or sources. This can save time and money for the system in the long term.

Before using a TSMP, you must submit it to us for approval. You should use this guidance to ensure we have all the required information. When you receive written approval for your TSMP, keep it on file with your system's monitoring plan.

For the GWR, there are two categories of monitoring representative source water, wells representing:

1. Coliform monitoring locations in the distribution system.

2. Other wells within the same hydrogeologic setting.

How Distribution Sites Link to Wells

Table 5.1 shows the requirements for the TSMP table of distribution sites and sources. Table 5.2 shows an example of a list of sites and sources. Figure 5.2 shows an example of a distribution map.

Table 5.1. Requirements for a Distribution Sites and Sources Link Table

Routine Distribution Coliform Sample Sites	Entry Points that Feed Each Site	Wells Feeding Each Entry Point	TCEQ Source ID
List all routine distribution coliform sites. This list should already be in your monitoring plan under the "Distribution" section. If the sites are numbered, include the numbers also.	List any entry points that feed each routine distribution coliform site. If that changes under different operating conditions, list all the entry points that might feed that part of the system. If you know that a site gets water from a different entry point in the summer and winter, note that.	List all the wells that feed each entry point. Include emergency and demand wells.	List the TCEQ Source ID for each well.

Table 5.2. Example of TSMP Distribution Sites and Corresponding Well Sources Table

Sample Site Number	Routine Distribution Coliform Sample Site	Entry Point Feeding That Site	Wells Feeding That Entry Point	TCEQ Source ID
1	City Hall	EP001	Well 1 (emergency)	G1019999A
2	Fire Department	EP001	Well 2	G1019999B
3	123 Apple Street	EP002	Well 3	G1019999C
4	15401 Querca Street	EP002	Well 3	G1019999C
5	20 Industrial Park Road	EP003	Well 4	G1019999D
6	456 Fleet Street (Operator's house – Alternate site)	EP001	• Well 1 (emergency) • Well 2	• G1019999A • G1019999B

Table 5.3. Example of TSMP Distribution Sites and Well Sources Table for a Community PWS with Two Wells and Seven Coliform Sites

Sample Site ID	Routine Distribution Coliform Sample Site	Summer Well[6]	Entry Point Summer Well 1	Winter Well 2 Only	Entry Point Winter Well 2 Only
SS-A	Sample Station at 765 FM 4691	Well 1	1	2	2
SS-B	Hose bib at NE corner of Court House	Well 2	2	2	2
SS-C	Sample Station at High School (Bldg 4)	Well 2	2	2	2
SS-D	Hose bib at SW corner of Middle School	• Well 1 • Well 2	• 1 • 2	2	2
SS-E	Sample Station at 987 S East Avenue	Well 2	2	2	2
SS-F	(alt) Hose bib at back of roadhouse	Well 1	1	2	2
SS-G	(alt) Hose bib on side of church	Well 2	2	2	2

Figure 5.2. Diagram of the Distribution Site and Source Relationship

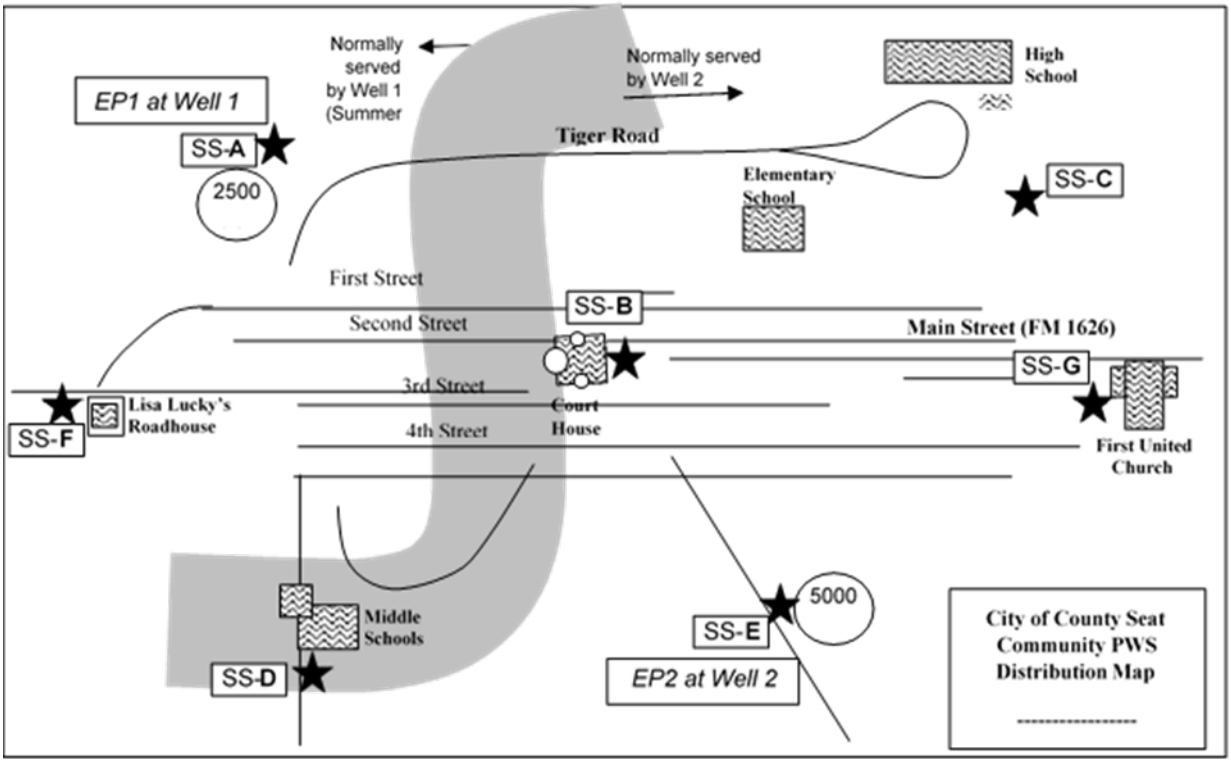

[6] Demand

Representative Wells

The TSMP describes any groups of wells that are hydrogeologically similar enough that a sample from one well can represent the whole group. If you wish to limit follow-up raw well sampling by identifying representative wells, you must provide justification and documentation showing hydrogeologic similarity. This is only necessary if you wish to limit sampling to one well out of a group of wells. If you only have a few wells, you may not need to include this section.

When wells are hydrogeologically similar, they are drawing water from parts of the aquifer that are interconnected and the water that they produce is expected to be comparable. If the wells are in close proximity to each other, it should be possible to get a sample from one well that reasonably represents water from all the wells. So, if one well is free of fecal contamination, you can deduce that all the other wells are also free of fecal contamination.

The following tables and figures provide information on requirements and examples:

- Table 5.4 describes the requirements for a representative well group table.
- Table 5.5 is an example of a representative well table for a single group of two wells
- Table 5.6 is an example of a table for two groups of four wells.
- Figure 5.2 is a diagram depicting the relationships described in Table 5.6.

Table 5.4. Requirements for a Representative Well Group Table

Proposed Sample Well	Backup Well ID	Source IDs	Names of Wells	Aquifer / Well Depth / Well GPM	Entry Point(s)
The well that you propose to sample as representative of the group of wells.	Well to be sampled if primary representative well is offline.	TCEQ source IDs for wells that are proposed to be represented by the well list in the first column.	System's name for well(s).	Aquifer that those wells draw water from / depth of well / well output in gallons per minute (GPM).	Usually a group of wells will feed the same entry point, but not always.

Table 5.5. Example of a Representative Well Table (for One Group with Two Wells)

Representative Well ID	Backup Well ID	Source IDs of Wells Represented	Names of Wells Represented	Aquifer / Well Depth / Well GPM	Entry Point(s) Associated with Wells
G1019999A	G1019999B	G1019999A	Well 1	Chicot / 280' / 45	EP001
G1019999A	G1019999B	G1019999B	Well 2	Chicot / 300' / 50	EP001

Table 5.6. Example of a Representative Well Table (for Two Groups of Four Wells)

Representative Well ID	Backup Well ID	Source IDs of Wells Represented	Names of Wells Represented	Aquifer / Well Depth / Well GPM	Entry Point(s) Associated with Wells
G2550001A	G2550001B	G2550001A	Well 1	Glen Rose / 1233' / 115	EP001
G2550001A	G2550001B	G2550001B	Well 2	Glen Rose / 1200' / 100	EP001
G2550001A	G2550001B	G2550001C	Well 3	Glen Rose / 1188' / 136	EP001
G2550001A	G2550001B	G2550001D	Well 4	Glen Rose / 1046' / 125	EP001
G2550001D	G2550001E	G2550001E	Well 5	Trinity / 541' / 76	EP002
G2550001D	G2550001E	G2550001F	Well 6	Trinity / 540' / 80	EP002
G2550001D	G2550001E	G2550001G	Well 7	Trinity / 555' / 45	EP002
G2550001D	G2550001E	G2550001H	Well 8	Trinity / 539' / 50	EP002

Figure 5.3. Diagram of Representative Wells

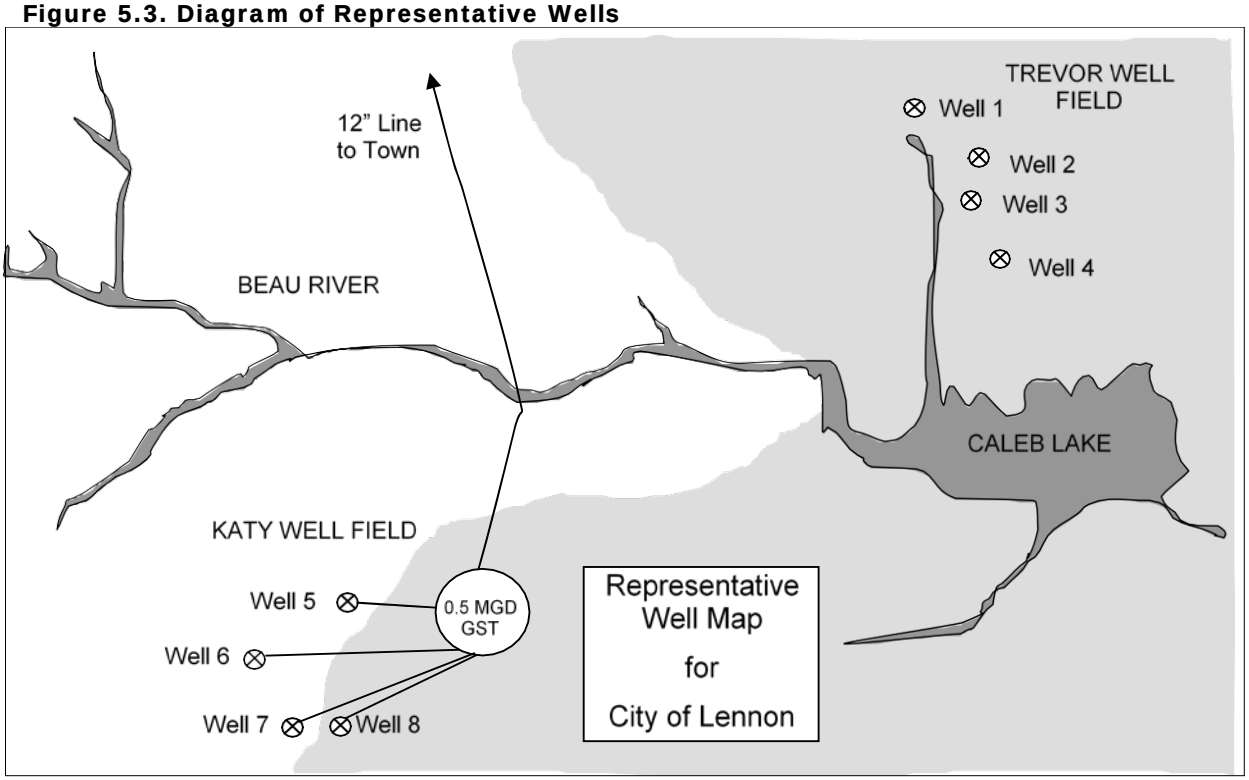

Interconnections with Other Groundwater Systems

Part of the TSMP is a description of interconnections with other systems that have wells. This section of the plan should describe which purchased-water interconnections provide water to each part of your distribution.

The TSMP should include contact information and maps or geographically representative schematics that show which wells provide water, and which wells will be sampled depending on the location of a coliform positive sample in your distribution system.

Triggered Source Monitoring Plan Requirements

For assistance in submitting a TSMP, contact us at 512-239-4691 and ask to speak with the Groundwater Rule Team. For information on what to include in a TSMP, download the appropriate checklist(s) from our website at <www.tceq.texas.gov/drinkingwater/microbial/gwr_main.html>:

- Checklist D: Wells Representing Coliform Monitoring Locations in the Distribution System.
- Checklist H: Wells Representative of Other Wells in the Same Hydrogeological Setting.

Assessment Source Monitoring

You may be required to collect monthly raw water samples if your system has wells in aquifers that are sensitive to surface water intrusion, or if the wells are vulnerable in some other way.

We will notify you in writing, for example in a sanitary control easement exception letter, if this sampling is necessary at your PWS. **If required, you must:**

- Collect and analyze monthly raw water samples for E. coli and total coliform bacteria.
- List all sources, along with the associated rule exceptions, in your monitoring plan.
- Keep a copy of the letter that requires the sampling.

Plant Schematic

Figure 5.4 is an example of a schematic (or diagram) for a groundwater system that uses reverse osmosis to remove a chemical contaminant. Figure 5.5 is an example of a schematic including all sources of water, even if one source may only be for emergency purposes. Figure 5.6 shows an example of a schematic for a groundwater system that contains multiple sources.

Groundwater and purchased-water systems are required to maintain a disinfectant residual but are not required to monitor at the entry point. While not for compliance purposes, we highly recommended that you sample the disinfectant residual at any entry point.

Figure 5.4. Example of a Plant Schematic for a Groundwater System Using Reverse Osmosis (RO) to Remove Chemical Contaminants

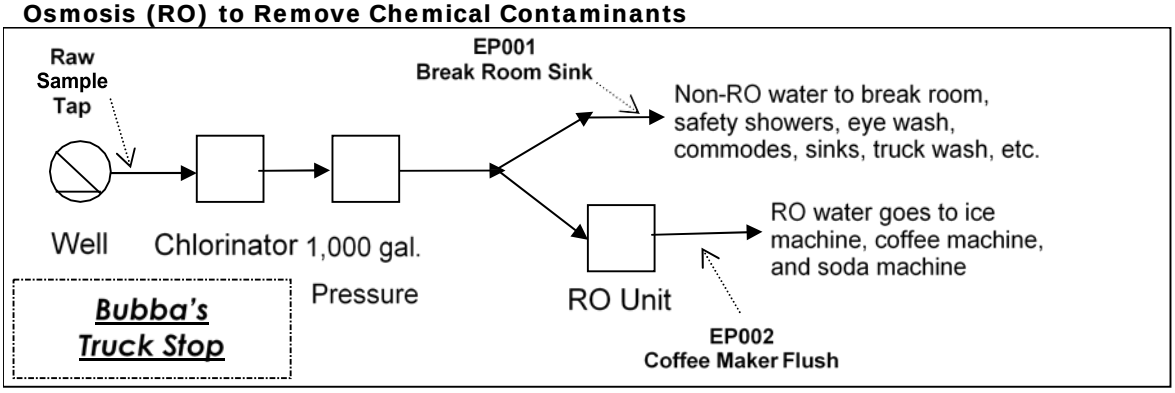

Figure 5.5. Distribution Schematic for a System with Wells that Are Not Continuously Used

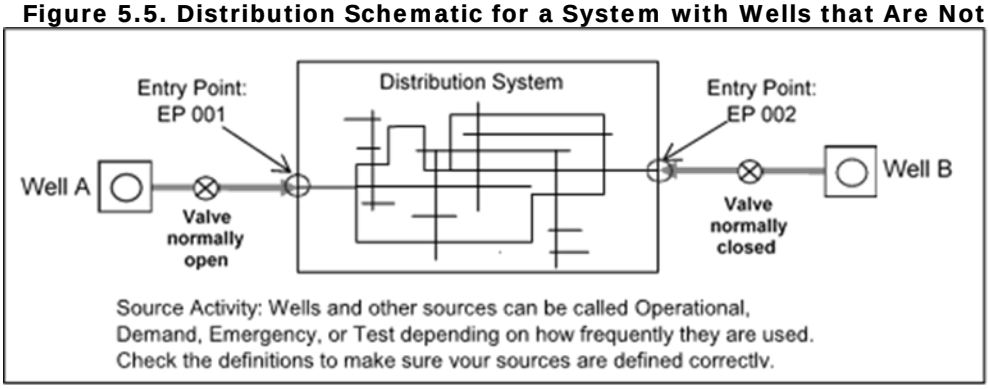

Figure 5.6. Simple Schematic for a System with Seven Wells

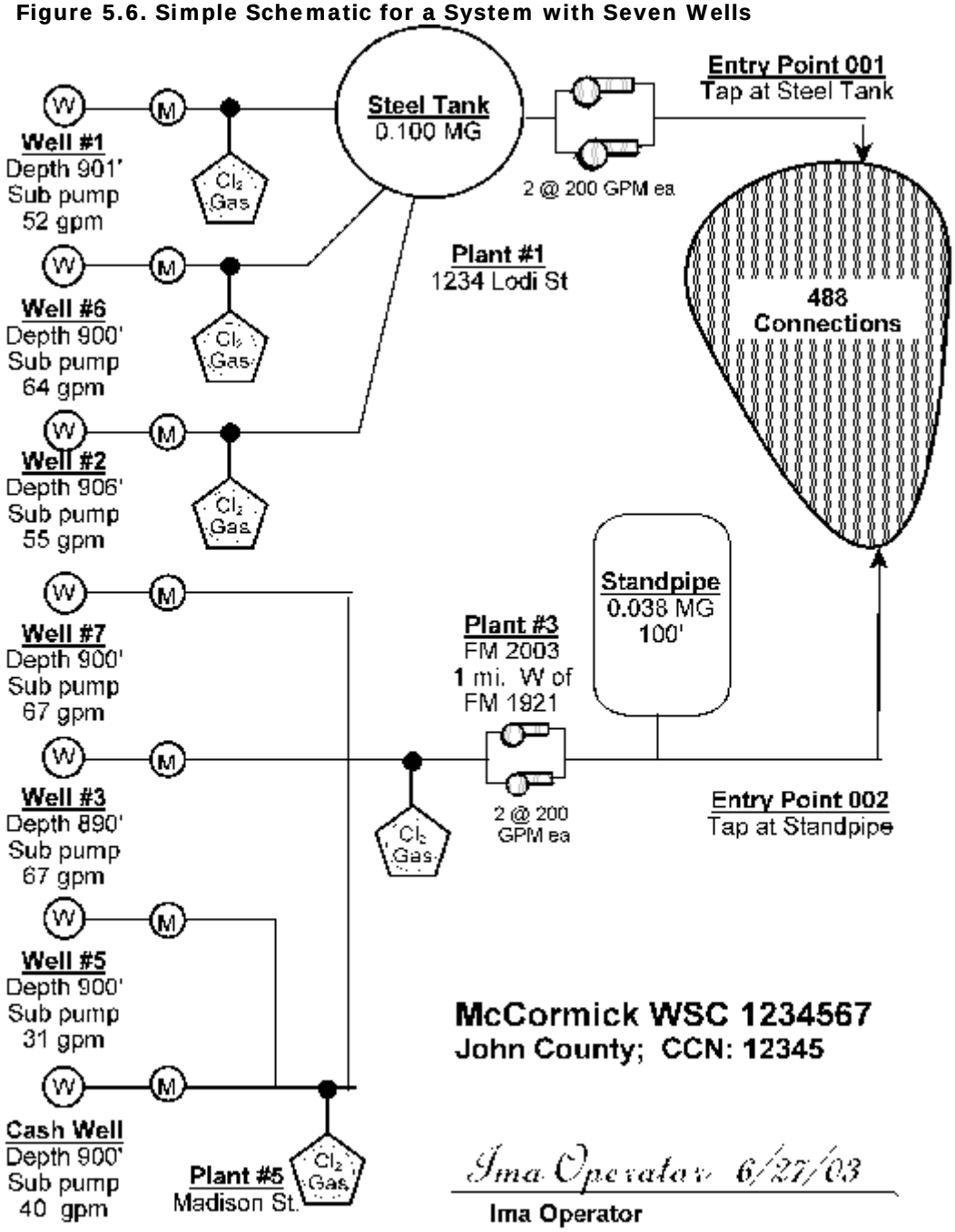

Chapter 6. Revised Total Coliform Rule (RTCR) and Disinfectant Residual

Bacteriological samples, usually called coliform samples, should be part of your distribution system samples. You must measure the disinfectant residual (free chlorine or total chlorine) every time you take a coliform sample. This requirement should be included in your monitoring plan.

The RTCR requirements apply to all PWSs, including TNC systems. For more information about the RTCR monitoring requirements, please see our publication Coliform Sampling for PWSs (RG-421).

Applicability

All PWSs that operate a distribution system have sampling requirements. If you have a distribution system, but you do not treat water, you still have to sample – *unless you only wholesale raw water*.

Most water systems must check the disinfectant residual and microbial quality in their system because of: (1) the risk of sanitary defects occurring within the water supply; and (2) possible health risks to those consuming the water.

Samples are collected in the distribution system for constituents that change as the water flows through the pipes. For instance, chlorine is used up as it disinfects (by inactivating microorganisms).

Frequency

The minimum sampling frequency for PWSs, depending on your population, is shown in Table 6.1. The population of water systems is based on population served as defined in 30 TAC 290.38(71) as a person who lives in, is employed by or works in a place served by the water system. The population of systems will be based on the data reported during the most recent CCI of the PWS.

The population for monitoring should reflect the system population as indicated in the Drinking Water Watch application. The most up-to-date information for your system can always be found on our Drinking Water Watch database at www.tceq.texas.gov/goto/dww. If you feel this information needs updated, please contact the inventory team at PWSINVEN@tceq.texas.gov.

You must physically take the samples during the month of the reporting period. For example, samples taken in May cannot be used for June reporting or vice versa.

Table 6.1. Required Number and Frequency of Coliform Samples

Your system serves this many people	Minimum coliform samples to collect	Your sampling events must occur at least this frequently[7]:
1 to 1,000	1	Once each month, rotating through up to 5 representative sampling sites.
1,001 to 2,500	2	Once a month – or twice a month at regular intervals – rotating through 5 representative sampling sites.
2,501 to 3,300	3	Once a month – or twice a month at regular intervals – rotating through 5 representative sampling sites.
3,301 to 4,100	4	Once a month – or twice a month at regular intervals – rotating through 5 representative sampling sites.
4,101 to 4,900	5	Once a month – or twice a month at regular intervals – rotating through 5 representative sampling sites.
4,901 to 5,800	6	Twice a month at regular intervals.
5,801 to 6,700	7	Twice a month at regular intervals.
6,701 to 7,600	8	Twice a month at regular intervals.
7,601 to 8,500	9	Twice a month at regular intervals.
8,501 to 12,900	10	Twice a month at regular intervals.
12,901 to 17,200	15	3 times a month at regular intervals.
17,201 to 21,500	20	4 times a month at regular intervals.
21,501 to 25,000	25	4 times a month at regular intervals.
25,001 to 33,000	30	Daily.
33,001 to 41,000	40	Daily.
41,001 to 50,000	50	Daily.
50,001 to 59,000	60	Daily.
59,001 to 70,000	70	Daily.
70,001 to 83,000	80	Daily.
83,001 to 96,000	90	Daily.
96,001 to 130,000	100	Daily.
130,001 to 220,000	120	Daily.
220,001 to 320,000	150	Daily.
320,001 to 450,000	180	Daily.
450,001 to 600,000	210	Daily.
600,001 to 780,000	240	Daily.
780,001 to 970,000	270	Daily.

[7] If you have any questions about our interpretation of "daily sampling," call us at 512-239-4691 and ask for the Revised Total Coliform Rule Staff.

Your system serves this many people	Minimum coliform samples to collect	Your sampling events must occur at least this frequently[7]:
970,001 to 1,230,000	300	Daily.
1,230,001 to 1,520,000	330	Daily.
1,520,001 to 1,850,000	360	Daily.
1,850,001 to 2,270,000	390	Daily.
2,270,001 to 3,020,000	420	Daily.
3,020,001 to 3,960,000	450	Daily.
3,960,001 or more	480	Daily.

Location

Samples for microbial quality must be collected at active service connections or locations adjacent to active connections. The set of sampling locations must be representative of the whole distribution system, and you must sample each location regularly. If you take fewer than five samples at a time, don't use the same location each time. Instead, rotate through your full set of sampling locations.

You should already have a list of coliform sampling sites at your PWS to use as part of the monitoring plan.

If a routine sample result is positive or "coliform-found," you must also identify locations upstream and downstream to collect repeat samples. This complete list of routine and repeat sample locations may already be documented in a Sample Siting Plan. The Sample Siting Plan can be attached to the system's monitoring plan.

Table 6.2. Required Number of Routine Distribution System Coliform Sample Sites

If your system serves this many people . . .	Then you must collect at least this many coliform samples each month:	And you must have at least this many[8] routine distribution coliform sample sites:
1 to 4,900	1 to 5	5 (sample each location regularly)
4,901 to 33,000	6 to 30	1 site per sample – for example, if you collect 6 samples then you must have at least 6 sample sites
33,001 to 50,000	40 to 50	At least 30 sites

[8] This is the minimum required number of sample sites; however, you may designate more if you want. The sample sites must represent the whole distribution system. You must identify sites upstream and downstream of each routine sample site for collection of repeat samples unless otherwise stated in a system-specific SOP.

If your system serves this many people . . .	Then you must collect at least this many coliform samples each month:	And you must have at least this many[8] routine distribution coliform sample sites:
50,001 or more	60 to 480	Half the number of samples – for example, if you collect 210 samples then you must have at least 105 sample sites

You must collect at least three samples for each total coliform-positive sample found:

1. From the sampling tap where the original total coliform positive sample was collected.
2. At a tap within five service connections upstream of the original sampling site.
3. At least one repeat sample at a tap within five service connections downstream of the original sampling site.

If a total coliform-positive sample is at the end of the distribution system, or one service connection away from the end of the distribution system, you must still take all required repeat samples.

You may elect to specify either alternative fixed locations, or criteria for selecting repeat sampling sites on a situational basis in a standard operating procedure (SOP) included with the sample siting plan. We may review, revise, and approve any SOP proposed. You must specify and sample three repeat locations, regardless of how many routine samples are taken. You may specify more than three locations if we approve it. If a groundwater system serves a total of 1,000 people or less, an entry point sample can be used as the third repeat location. A TSM sample can double as the third repeat sample if the groundwater system only operates one well.

We may require additional samples in the distribution system for raw source water to ensure the protection of public health.

Table 6.3. Requirements for a Table of Coliform Sample Sites

Site Code or Letter	Address of Routine Distribution Sample Site	Sample Schedule	Comments
Use a number or letter that corresponds to the site on your distribution system map.	Provide a street address for the sample site. If it is a sample station, provide a description of its location.	List the days or weeks that sampling should occur for each site or group of sites.	Make any notes relating to sampling schedule or locations.

Table 6.4. Example of a Coliform Sample Site Table

Site	Address	Upstream	Downstream
A	2468 Kyle St.	• 2460 Kyle St. • 2462 Kyle St. • 2464 Kyle St. • 2466 Kyle St.	• 2470 Kyle St. • 2472 Kyle St. • 2474 Kyle St. • 2476 Kyle St.
B	357 Buda Rd.	• 349 Buda Rd. • 351 Buda Rd. • 353 Buda Rd. • 355 Buda Rd.	• 359 Buda Rd. • 361 Buda Rd. • 363 Buda Rd. • 365 Buda Rd.
C	6432 Hays Way	• 6424 Hays Way • 6426 Hays Way • 6428 Hays Way • 6430 Hays Way	• 6434 Hays Way • 6436 Hays Way • 6438 Hays Way • 6440 Hays Way
D	731 Wood Creek	• 723 Wood Creek • 725 Wood Creek • 727 Wood Creek • 729 Wood Creek	• 733 Wood Creek • 735 Wood Creek • 737 Wood Creek • 739 Wood Creek
E	22222 Henly Heights	• 22214 Henly Heights • 22216 Henly Heights • 22218 Henly Heights • 22220 Henly Heights	• 22224 Henly Heights • 22226 Henly Heights • 22228 Henly Heights • 22230 Henly Heights

Disinfectant Residual: Free or Total Chlorine (30 TAC 290.110)

Before distribution to customers for human consumption, you must have the water for your PWS properly disinfected. You must also maintain acceptable disinfectant residuals throughout the distribution system.

Not every system will require additional treatment, such as a system only purchasing treated water, but it is still the receiving system's responsibility to monitor and ensure the disinfectant residual throughout their system. If the residual becomes lower than acceptable, and the receiving system does not provide additional treatment, then the wholesaling system needs to be contacted and informed.

You must measure the concentration of the disinfectant residual. If your system uses:

- free chlorine: you must measure the concentration of free chlorine in the distribution system
- chloramines: you must measure the concentration of total chlorine in the distribution system

For more information about disinfectant residual monitoring and reporting, please see our publication Disinfectant Residual Reporting for Public Water Systems (RG-407) at <www.tceq.texas.gov/assets/public/comm_exec/pubs/rg/rg-407.pdf>.

Other requirements apply to specific types of systems. For example:

- Surface water systems must submit information about chlorine residual on the Surface Water Monthly Operating Report.
- Entry point disinfectant monitoring for systems that treat SW or GUI is discussed in Chapter 4 of this guidance.
- Groundwater and purchased water systems will report their disinfectant residuals on a Disinfectant Level Quarterly Operating Report submitted to us every quarter the system is in operation.
- TNC systems are the exception and are not required to submit a DLQOR to us, however disinfectant data must be collected and retained at the system.

Location

Disinfectant residuals must be measured at the same location where samples are collected for coliform testing, indicated by the monitoring plan. For convenience, you can pick additional disinfectant sites that are representative of the whole distribution system.

Frequency

Disinfectant residuals must be measured at the same time that samples are collected for coliform testing.

You must also measure disinfectant residual *daily* at representative locations within the distribution system if a system uses:

- SW or GUI.
- Only GW or purchased water but serve at least 250 connections, or 750 people.

If you use only GW or purchased water and serve fewer than 250 connections and 750 people, you must measure the disinfectant residual at representative locations within the distribution system *at least once every seven days*.

Table 6.5. Requirements for a Disinfectant Residual Sample Site Table

Site Code or Letter	Address of Routine Distribution Sample Site	Sample Schedule	Comments
Use a number or letter that corresponds to the dot showing the site on your distribution system map.	Provide a street address for the sample site. If it is a sample station, provide the best approximate street address or a description of its location.	List the days or weeks that sampling should occur for each site or group of sites.	Make any notes relating to the sampling schedule or locations.

Table 6.6. Example of a Disinfectant Residual Sample Site Table for a Community System Required to Have Five Sites

Site	Address	Schedule	Comments
A	2468 Kyle Street	Monday, Saturday	Hose bib on Mayor Kolache's house
B	357 Buda Road	Tuesday, Sunday	Tap on pink house next to elevated storage
C	6432 Hays Way	Wednesday	Hose bib
D	731 Wood Creek	Thursday	New sample station 2
E	2222 Henly Heights	Friday	Sample station 1

Table 6.7. Example of a Disinfectant Residual Sample Site Table for a Non-transient, Non-community (NTNC) System Required to Have Five Sites and Sample Daily

Site	Location	Schedule	Comments
A	Lab tap	Monday	Licensed Lab Tech collects on 1st shift. Standard Operating Procedure is in QC manual (SOP QC-007).
B	Men's washroom by office	Tuesday	Licensed Lab Tech collects on 1st shift. Standard Operating Procedure is in QC manual (SOP QC-007).
C	Main break room sink	Wednesday	Licensed Lab Tech collects on 1st shift. Standard Operating Procedure is in QC manual (SOP QC-007).
D	Eye wash by process unit A	Thursday	Licensed Lab Tech collects on 1st shift. Standard Operating Procedure is in QC manual (SOP QC-007).
E	Safety shower by machine 1	Friday	Licensed Lab Tech collects on 1st shift. Standard Operating Procedure is in QC manual (SOP QC-007).
A	Lab tap	Saturday	1st shift overtime lab crew supervisor collects.
B	Men's washroom by office	Sunday	Sunday 3rd shift mfg. supervisor collects sample.

Table 6.8. Example of a Disinfectant Residual Sample Site Table for a Transient, Non-community (TNC) System Required to Have Five Sites and Sample Weekly

Site	Location	Schedule
A	Coffee dispensing area sink	1st Monday of month
B	Spigot out by gas pumps	2nd Monday of month
C	Women's bathroom sink	3rd Monday of month
D	Hose bib in back of store	4th Monday of month
E	Water dispensing unit in parking lot	5th Monday (if there is one)

Sampling for Systems that Use Monochloramine

Some systems use monochloramine as a disinfectant, in addition to or as a replacement for free chlorine. If your system uses monochloramine, you should include a copy of your NAP as an attachment indicating how you ensure that nitrification is not causing a loss of residual in the distribution system. Two tiers of trigger levels help systems identify when possible nitrification is occurring within their system. Refer to the NAP template on our website for guidance in drafting your trigger levels and overall NAP.

Sampling for Systems that Use Chlorine Dioxide (30 TAC 290.110)

All PWSs that use chlorine dioxide (ClO2) in their treatment process must routinely monitor for chlorine dioxide and its disinfection byproduct, chlorite, at the point of entry and within the distribution system. See “Chapter 8. Disinfection Byproducts (DBPs)” for more information on chlorite monitoring and reporting. The Chlorine Dioxide Monthly Operating Report (ClO2MOR) and chlorite results must be mailed to us by the tenth day of the month following the end of the reporting period. You can get the ClO2 MOR on our website from the “Forms” link.

Although chlorine dioxide is very useful as a disinfectant, elevated chlorine dioxide residuals in the distribution system are undesirable because of the possibility of adverse effects on the development of children’s central nervous systems. Usually, this is not a problem because systems use chlorine dioxide to treat the raw water, and by the time the water leaves the plant, all the chlorine dioxide is removed.

To use chlorine dioxide in your system, you must have our approval. Call us at 512-239-4691 and ask to speak to our Technical Review and Oversight Team. All samples taken must be analyzed at a laboratory approved by our lab approval coordinator. Note: you are not notified of an exceedance if your bill to the laboratory is not paid so it is critical to pay any outstanding bill to stay informed of what is in your water.

- Frequency: If your system uses chlorine dioxide, you must collect your own chlorine dioxide samples at the entry point to the distribution system. You must measure the chlorine dioxide residual at the entry point once every day for compliance. The chlorine dioxide concentration is reported on the ClO2MOR. If the concentration of chlorine dioxide at the entry point is over the maximum residual disinfection level (MRDL) of 0.8 mg/L[9], the operator must do additional sampling in the distribution system.
- Location: Samples must be taken at each entry point that has water treated with chlorine dioxide. (Read section 4.1 for the definition of an entry point.)

Distribution System Chlorine Dioxide

A system that uses chlorine dioxide must measure chlorine dioxide in the distribution system if the entry point sample exceeds the MCL. The first sample must be collected

[9] A water system that violates the MRDL for chlorine dioxide must notify us within 24 hours of the discovery of a MRDL exceedance occurring at the point of entry.

within two hours of the discovery of the elevated chlorine dioxide levels. The two subsequent samples must be collected at six-hour and eight-hour intervals thereafter.

- **Frequency:** If the chlorine dioxide residual sample taken daily at the entry point exceeds 0.8 mg/L, you must take three additional chlorine dioxide samples within the distribution system.
- **Location:** You must collect three additional samples from within the distribution system for chlorine dioxide sampling.
  - If your system does not have booster chlorination within the distribution system, all three samples must be taken at the first service connection nearest the plant where elevated levels of chlorine dioxide were found.
  - If your system has booster chlorination within the distribution system, sampling sites must be designated as follows: (1) the first connection nearest the plant that contained elevated levels of chlorine dioxide, (2) at the first service connection downstream of the booster station where booster chlorination occurs, and (3) a third sample taken from the far reaches of the distribution system.
  - Additional samples taken within systems that have booster chlorination facilities in the distribution system will be based on the flow rate of water as it moves through the distribution system.

Chapter 7. Inorganic, Organic and Radionuclide Rules

For all chemical compliance samples listed in this chapter, we use a third-party contractor to collect samples for all PWSs in the state. Samples are collected by trained and certified collectors that hold a valid water operator license. In addition, we conduct annual audits of the sampling contractor to ensure that samples are collected according to the analysis method, consistently, and from the proper locations.

Sampling described in this chapter applies to all PWSs, depending on the system's source of water and type classification. The only exception is for systems wholesaling raw water. In this case, the wholesaling system has no entry point sampling requirements, while *the receiving system would be sampled for the full sweep of analytes*. If you have any questions about these monitoring requirements contact us at 512-239-4691 and ask for the Drinking Water Quality Team, or by email at <PDWS@tceq.texas.gov>.

A Note on Contractor-Collected Samples

When samples are collected by our contractors, our Public Drinking Water Program staff schedules the sampling. The most up-to-date information for your system can always be found on our Drinking Water Watch database at <www.tceq.texas.gov/goto/dww>. You should keep a copy of any scheduling change letters from us in your records.

The sample results are electronically released to us and displayed on DWW after you have paid the bill. You should also receive a physical copy of all sample results from whichever lab our contractor uses for analysis. It is extremely important to ensure all contact information is up-to-date in our DWW database as the bills are sent using that information. Be sure to pay the bill in a timely manner and check DWW after roughly two weeks to see that the results were reported to us. You do not need to include any results in the monitoring plan, but you should keep the physical copy of your results in your local records.

If you have any questions about sample scheduling, call us at 512-239-4691 to request a staff member overseeing entry point sampling schedules or contact us by email at <PWSCHEM@tceq.texas.gov>.

Inorganic Contaminants and Secondary Constituents

The requirements for routine sampling of inorganic contaminants (IOCs) apply to all community and NTNC systems. The requirements for nitrate, nitrite, and secondary contaminant sampling also applies to TNC systems.

Minerals and Metals (30 TAC 290.106)

The third-party contractor samples PWSs for several inorganic contaminants that include metals and minerals. For these analyte groups, some chemical analytes have a maximum contaminant level (MCL) established to determine maximum allowable amount of a contaminant in drinking water to protect public health. Some contaminants do not pose a risk to public health, but affect the aesthetic nature of the water, such as taste, color, and odor; these contaminants have a secondary constituent level (SCL).

Frequency

Community and NTNC groundwater entry points to the distribution system are monitored by the third-party contractor for minerals and metals every three years and surface water entry points are monitored annually.

The third-party contractor monitors TNC systems for minerals and metals that are classified as secondary standard constituents once every three years. Secondary standard constituent levels are based on the aesthetic nature of the chemical in that it does not cause physical harm but can discolor drinking water and may add taste or odor problems.

If the sample result from a sample site exceeds the MCL, the system will be monitored quarterly at that sample site for the analyte in exceedance starting the next quarter after the exceedance occurs. For minerals and metals, samples may be taken on behalf of the PWS quarterly due to an exceedance for antimony, arsenic, barium, beryllium, cadmium, chromium, cyanide, fluoride, mercury, selenium, or thallium.

After the initiation of quarterly monitoring, the sample site may return to routine monitoring frequency after the sample site is reliably and consistently below the MCL for a minimum of two quarters for a groundwater sample site and a minimum of four quarters for a surface water sample site.

Location

Samples must be collected by the third-party contractor at each entry point to the distribution system.

Nitrate and Nitrite (30 TAC 290.106)

Nitrate is an inorganic chemical that occurs naturally as part of the nitrogen cycle and finds its way into groundwater by contamination from fertilizers, feed lots, and septic fields. Nitrite (NO2) can also be converted into nitrate (NO3) through a chemical reaction called oxidation, which can occur in distribution.

Health Note: Nitrate at levels above the MCL pose an acute health risk, especially for children under six months of age who can develop blue baby syndrome. Infants below the age of six months who drink water containing nitrate in excess of the MCL (*or formula made with water containing excessive nitrates*) **could become seriously ill and, if untreated, the condition may be fatal.** Symptoms of blue baby syndrome include: bluish or purplish discoloration of the skin or mucous membranes (cyanosis);

shortness of breath or difficulty breathing; and vomiting and diarrhea. If a child is under the age of six months, the child must be given an alternative water supply for any consumption. ***Boiling the affected water is not an effective treatment for nitrate removal.***

Frequency

Nitrate at each entry point to the distribution system must be monitored. Our contractor will monitor each groundwater entry point to the distribution system annually. At a community or NTNC system each surface water entry point to the distribution system will be monitored quarterly. At any TNC system the contractor will sample annually at each surface water entry point to the distribution system. High nitrate or nitrite levels may require an increased monitoring frequency.

If your community or NTNC water system has a result from a sample site that is equal to or greater than 50 percent of the nitrate MCL of 10.0 milligrams per liter (mg/L) or nitrite MCL of 1.0 mg/L, the contractor will monitor your system for nitrate or nitrite quarterly at that sample location. You may return to the routine monitoring frequency once the chemical result data is reliably and consistently below the MCL for a minimum of four consecutive quarters.

Location

Samples must be collected by the third-party contractor at each entry point to the distribution system.

Fluoride (30 TAC 290.106)

Fluoride is a mineral that occurs naturally and is released from rocks into the soil, water, and air. Most water contains some level of natural fluoride. You may also add fluoride to drinking water supplies as a public health measure for reducing cavities.

Our third-party contractor will monitor your PWS for fluoride as it is classified as both a primary and secondary standard. Systems that have fluoride over the SCL of 2.0 mg/L must notify their customers of those levels annually.

Health Note: People who drink water containing fluoride in excess of the MCL over many years could get bone disease, including pain and tenderness of the bones. Fluoride in drinking water at half the MCL or more may cause mottling of children's teeth, usually in children less than nine years of age. Mottling, also known as dental fluorosis, may include brown staining or pitting of the teeth, and occurs only in developing teeth before they erupt from the gums. An alternate source of water should be provided to the affected population, which consists of children less than nine years old.

Frequency

Community and NTNC groundwater entry points to the distribution system are routinely monitored for fluoride every three years and surface water entry points are monitored annually. TNC systems will be routinely monitored for fluoride once every three years with the collection of the secondary standard analyte group.

If a community or NTNC water system has a result from a sample site that is equal to or greater than fluoride MCL of 4.0 mg/L, fluoride will be monitored quarterly at that sample location. You may return to the routine monitoring frequency once the chemical result data is reliably and consistently below the MCL for a minimum of two quarterly samples at a groundwater sampling site or four quarterly samples at a surface water sampling site.

Location

Samples must be collected by the third-party contractor at each entry point to the distribution system.

Secondary Constituents (30 TAC Sections 290.105 and 290.118)

Secondary constituents do not pose a risk to public health, but they affect the aesthetic nature of the water, such as taste, color, and odor. These constituents have an SCL. Fluoride is classified as both a primary and secondary drinking water standard.

The requirements for secondary constituent monitoring applies to all PWSs.

- Community and NTNC groundwater and surface water entry points to the distribution system are routinely monitored for secondary constituents (taken with the collection of the mineral and metal samples).
- TNC systems will be routinely monitored for secondary constituents at each entry point to the distribution system.
  - Secondary constituent monitoring for TNC systems does not include the primary drinking water standards for minerals and metals, with the exception of fluoride.

Frequency

Community and NTNC groundwater entry points to the distribution system are routinely monitored for secondary constituents every three years and surface water entry points are monitored annually with the collection of the mineral and metal samples. TNC systems are routinely monitored for secondary standards once every three years at each entry point to the distribution system.

Location

Samples must be collected by the third-party contractor at each entry point to the distribution system.

Asbestos (30 TAC 290.106)

All community and NTNC systems, including systems that purchase water from other PWSs, must be evaluated for asbestos vulnerability. You must keep a record of the size, length, age, and location of asbestos-cement pipes in your distribution system.

Frequency

Our contractor will monitor your system for asbestos once during the first three years of each nine-year compliance cycle. If a community of NTNC water system has a result from a sample site that is equal to or greater than the asbestos MCL of 7 million fibers per liter, the system will be monitored for asbestos quarterly.

Your system may be returned to the routine monitoring frequency at your PWS after asbestos levels are reliably and consistently below the MCL for: (1) a minimum of two quarterly samples at a groundwater system, or (2) four quarterly samples at a surface water system.

Location

Asbestos will be monitored at locations where asbestos contamination is likely to occur. More sample locations may be required based on the size, length, age, and location of asbestos-cement pipe in the distribution system.

Organic and Radionuclide Contaminants

Your PWS is monitored for both synthetic organic chemical (SOC) contaminants and volatile organic chemical (VOC) contaminants. Each entry point to the distribution system at all community and NTNC public water systems must routinely monitor for SOC and VOC contaminants.

Synthetic Organic Chemicals (30 TAC 290.107)

SOC contaminants include pesticides, herbicides, and other industrial chemicals. SOC contaminants are separated by the EPA's analytical methods into four chemical analyte groups, summarized below in Table 7.1. Details about each method, including which category an individual analyte falls into, can be found on EPA's website at <https://nepis.epa.gov/Exe/ZyPDF.cgi?Dockey=P100PHJC.txt>.

Table 7.1. Synthetic Organic Chemicals Applicable to Entry Point Sampling

Analyte category	EPA method	TCEQ designation
SOC Group 5	525	SOC5
SOC Method 504	504.1	504
SOC Method 515	515.4	515
SOC Method 531	531.1	531

Frequency

For the initial compliance period, your system is monitored at each entry point for four consecutive quarters for each SOC analyte group.

After the initial compliance period, your system is monitored for SOC contaminants once every three years at each entry point to the distribution system.

If a sample result for any SOC contaminant is above the detection limit, your system must be monitored quarterly at that sampling point for the SOC analyte group in which the detection occurred as follows:

- A groundwater sample site must be monitored for a minimum of two consecutive quarters.
- A surface water sample site must be monitored for a minimum of four consecutive quarters.

After the consecutive quarterly monitoring, the sampling point may be monitored annually for that SOC analyte group.

If a sample result for any SOC contaminant exceeds the MCL, the sample site must be monitored quarterly for the SOC analyte group in which the exceedance occurred. After a minimum of four consecutive quarterly samples that show the system is in compliance and the system is reliably and consistently below the MCL, the system may be monitored annually for that SOC analyte group during the quarter that previously yielded the highest analytical result.

Location

Samples must be collected by the third-party contractor at each entry point to the distribution system.

Volatile Organic Chemicals (30 TAC 290.107)

Volatile organic chemical (VOC) contaminants are analyzed using EPA method 524.2. VOC contaminants include common petroleum chemicals, such as benzene, ethylbenzene, toluene, xylenes, and MTBE, as well as solvents such as tetrachloroethene, carbon tetrachloride, and trichloroethene.

Frequency

For the initial compliance period, our contractor will monitor your system at each entry point to the distribution system for four consecutive quarters. Systems are routinely monitored for VOC contaminants annually at each entry point to the distribution system after the initial compliance period.

If a sample result for any VOC contaminant is above the detection limit, monitoring must occur quarterly at that sampling point as follows:

- A groundwater sample site must be monitored for a minimum of two consecutive quarters.
- A surface water sample site must be monitored for a minimum of four consecutive quarters.

After the consecutive quarterly monitoring, the sampling point may be monitored annually.

If a sample result for any VOC contaminant exceeds the MCL, the sample site must be monitored quarterly. After a minimum of four consecutive quarterly samples that show the system is in compliance and the results are reliably and consistently below

the MCL, the system may be monitored annually during the quarter that previously yielded the highest analytical result.

Location

Samples must be collected by the third-party contractor at each entry point to the distribution system.

Radionuclide Contaminants (30 TAC 290.108)

All community PWSs are routinely monitored for naturally occurring and man-made radionuclide contaminants. Naturally occurring radionuclides include combined radium-226 and radium-228, gross alpha particle activity (including radium-226 but excluding radon and uranium), and uranium. Table 7.2 summarizes the detection limits and Table 7.3 shows the maximum contaminant levels of radionuclides.

Table 7.2. Detection Limits of Radionuclides

Contaminant	Detection Limit
Gross alpha particle activity	3 picoCuries per liter (pCi/L)
Combined radium (Radium-226 and 228)	1 pCi/L
Uranium	1 microgram per liter (µg/L)

Table 7.3. Maximum Contaminant Levels for Radionuclides

Contaminant	Maximum Contaminant Level
Gross alpha particle activity	15 pCi/L
Combined radium (Radium-226 and 228)	5 pCi/L
Uranium	30 micrograms per liter (µg/L)

Frequency

If the sample results for all contaminants (gross alpha particle activity, combined radium-226, combined radium-228, and uranium) at a sampling point are below the detection limits, your system must be monitored at that sampling point at least once every nine years.

If a sample result for any radionuclide contaminant is at or above the detection limit but at or below half of the MCL, the system must be monitored at that sampling point at least once every six years.

If a sample result for any radionuclide contaminant is above half the MCL, the system must be monitored at that sampling point at least every three years.

If a sample result for any radionuclide contaminant is at or above the MCL, the system must be monitored quarterly at that sampling point. If the average of four consecutive quarterly monitoring results are average below the MCL, then monitoring for the sampling point may return to a routine frequency determined by the sample result.

Location

Samples must be collected by the third-party contractor at each entry point to the distribution system.

Chapter 8. Disinfection Byproducts Rule

Certain byproducts are formed within your distribution system as a side effect of the disinfection process. Our third-party contractor collects total trihalomethanes (TTHM) and haloacetic acid (HAA5) samples in the distribution system. If you use either chlorine dioxide or ozone as part of the treatment process, then you need to sample for chlorite or bromate, respectively, instead of our contractor. It is also your responsibility to identify sample sites and coordinate with sample collectors to ensure that the required samples are collected.

- All community and NTNC systems **are required** to complete DBP sampling.
- TNC systems are ***not*** required to sample for DBPs.

Designating DBP compliance monitoring sites requires our approval. Site names are kept as data, and data quality is very important. To change sample sites, you must get our approval. The best way to do this is to contact us as soon as you are aware that a change must be made. You can contact the DBP rule coordinators by calling 512-239-4691, or by email at <DBP@tceq.texas.gov>.

Stage 2 Disinfectants and Disinfection Byproducts Rule Requirements

All community and NTNC systems must be sampled under Stage 2 of the DBP rule. Sample frequency and number of sample sites are based on the system's population and type of source water. This is an appropriate way to monitor for DBPs, since it does a better job of geographically representing distribution systems and risk.

Frequency

Table 8.1 outlines the routine sampling frequencies and other requirements for all PWSs based on source water type and population served.

Any TTHM and HAA5 sample collected for compliance purposes must be collected during normal operating conditions. The most updated sampling schedule for your system can be found on Drinking Water Watch at <dww2.tceq.texas.gov/DWW/>.

Table 8.1 Routine Stage 2 Monitoring Frequency and Number of Sites

Water Type	Retail Population	Routine Frequency[10]	Routine Number of Sites[11]
Surface Water (or Groundwater Under the Direct Influence of Surface Water)[12]	fewer than 500	Annual	1 or 2[13]
Surface Water (or Groundwater Under the Direct Influence of Surface Water)	500 to 3,300	Quarterly[14]	1 or 2
Surface Water (or Groundwater Under the Direct Influence of Surface Water)	3,301 to 9,999	Quarterly	2
Surface Water (or Groundwater Under the Direct Influence of Surface Water)	10,000 to 49,999	Quarterly	4
Surface Water (or Groundwater Under the Direct Influence of Surface Water)	50,000 to 249,999	Quarterly	8
Surface Water (or Groundwater Under the Direct Influence of Surface Water)	250,000 to 999,999	Quarterly	12
Surface Water (or Groundwater Under the Direct Influence of Surface Water)	1,000,000 to 4,999,999	Quarterly	16
Surface Water (or Groundwater Under the Direct Influence of Surface Water)	5,000,000 or more	Quarterly	20
Groundwater	fewer than 500	Annual	1 or 2
Groundwater	500 to 9,999	Annual	2
Groundwater	10,000 to 99,999	Quarterly	4
Groundwater	100,000 to 499,999	Quarterly	6
Groundwater	500,000 or more	Quarterly	8

[10] All systems must monitor during month of highest disinfection byproduct concentrations.
[11] Monitoring locations must be approved by our DBP coordinator.
[12] A system that uses any treated surface water or groundwater under the direct influence of surface water shall be considered a surface water system for purposes of this section.
[13] Systems serving fewer than 500 people and surface water systems serving 500 to 3,300 people must identify two sample sites in accordance with 40 Code of Federal Regulations §141.605(b) and may sample at a single site if the highest TTHM and HAA5 concentrations occur at the same time and location. One dual sample set must be collected at that location. If highest TTHM and HAA5 concentrations occur at different locations, then a single TTHM sample must be collected at the location with higher historical TTHM, and a single HAA5 sample must be collected at the location with higher historical HAA5.
[14] Systems on quarterly monitoring must take dual sample sets every 90 days.

Systems may be placed on reduced monitoring when the locational running annual average (LRAA) at each site is less than or equal to 0.040 mg/L for TTHM and less than or equal to 0.030 mg/L for HAA5. Table 8.2 lists reduced sampling frequencies for all PWSs based on the type of source water and population served.

Table 8.2. Reduced Stage 2 Monitoring Frequency and Number of Sites

Source Water	Population Size Category	Monitoring Frequency[15]	Dual Sample Sets Required	Location of Monitoring
Surface or GUI	less than 500	Annual	N/A	Monitoring may not be reduced.
Surface or GUI	500 to 3,300	Annual	1	If the highest TTHM and HAA5 measurements occurred at the same location and quarter[16].
Surface or GUI	3,301 to 9,999	Annual	2	• One at the location and during the quarter with the highest TTHM single measurement. • One at the location and during the quarter with the highest HAA5 single measurement.
Surface or GUI	10,000 to 49,999	Quarterly	2	At the locations with the highest TTHM and highest HAA5 LRAAs.
Surface or GUI	50,000 to 249,999	Quarterly	4	At the locations with the two highest TTHM and two highest HAA5 LRAAs.
Surface or GUI	250,000 to 999,999	Quarterly	6	At the locations with the three highest TTHM and three highest HAA5 LRAAs.
Surface or GUI	1,000,000 to 4,999,999	Quarterly	8	At the locations with the four highest TTHM and four highest HAA5 LRAAs.
Surface or GUI	5,000,000 or more	Quarterly	10	At the locations with the five highest TTHM and five highest HAA5 LRAAs.
Ground-water	fewer than 500	Triennial	1	If the highest TTHM and HAA5 measurements occurred at the same location and quarter.
Ground-water	500 to 9,999	Annual	1	If the highest TTHM and HAA5 measurements occurred at the same location and quarter.

[15] Systems on quarterly monitoring must take dual sample sets every 90 days.

[16] Systems on annual monitoring and surface water systems serving 500 to 3,300 people will use a single site if the highest TTHM and HAA5 concentrations occur at the same time and place. Any such system may be required to take individual TTHM and HAA5 samples (instead of a dual sample set) at sites identified as the highest TTHM and HAA5 sites, respectively. If separate sites for individual TTHM and HAA5 samples are used, then the TTHM sample must be collected during the quarter with the highest historical TTHM levels and the HAA5 sample must be collected during the quarter with the highest historical HAA5 level.

Source Water	Population Size Category	Monitoring Frequency[15]	Dual Sample Sets Required	Location of Monitoring
Ground-water	10,000 to 99,999	Annual	2	• One at the location and during the quarter with the highest TTHM single measurement. • One at the location and during the quarter with the highest HAA5 single measurement.
Ground-water	100,000 to 499,999	Quarterly	2	At the locations with the highest TTHM and highest HAA5 LRAAs.
Ground-water	500,000 or more	Quarterly	4	At the locations with the two highest TTHM and two highest HAA5 LRAAs.

Chlorite Monitoring (for Chlorine Dioxide Systems; 30 TAC 290.114)

Chlorite is an inorganic byproduct regulated at all systems that use chlorine dioxide. PWSs that use chlorine dioxide as a method for disinfection are subject to chlorite monitoring. Laboratory results must be reported to us with the Chlorine Dioxide Monthly Operating Report (ClO2MOR).

Frequency

Daily samples must be collected from the point of entry and analyzed for chlorite at an approved laboratory on any day that chlorine dioxide is used. In addition, once a month a three-sample set must be collected in the distribution system and analyzed for chlorite at a NELAP accredited laboratory. This three-sample set must be collected on a day when chlorine dioxide is used, and each sample in the set must be collected on the same day. A list of NELAP accredited laboratories can be obtained from our Quality Assurance Section by calling 512-239-5942 and requesting the list. A PDF containing these laboratories is also available online at <www.tceq.texas.gov/goto/tx-nelap-labs>.

If a daily chlorite result collected at the entry point exceeds the MCL of 1.0 mg/L, one three-sample set must be collected in the distribution system within 24 hours and analyzed at an accredited lab.

Location

Chlorite samples must be collected:

- Daily **at each entry point serving chlorine dioxide treated water**.
- Monthly (three-sample set) **at the locations listed in the monitoring plan and labelled with the physical address**.

Designation of the near, middle, and far distribution system sample locations should be representative of the entire distribution system, with the:

1. First sample location at a location near the first customer nearest the treatment plant.
2. Second sample location must be representative of the average water residence time.
3. Third sample location must reflect the maximum water residence time in the distribution system.

Bromate Monitoring (for Systems Using Ozone; 30 TAC 290.114)

Bromate is a disinfection byproduct regulated at any community or NTNC PWS that uses ozone. Bromate monitoring must be performed during any month that a PWS uses ozone for water treatment.

Frequency

If your PWS uses ozone you must collect one sample at the entry point to the distribution every month. The sample must be collected when the ozone is in use. Samples must be analyzed by an accredited lab.

Location

Samples must be taken at each entry point.

Chapter 9. Lead and Copper Rule (LCR)

Lead and Copper Distribution and Source Water (Entry Point) Sampling

Frequency

All community and NTNC systems must comply with lead and copper sampling requirements. TNC systems—such as parks or convenience stores—do not have to sample for lead and copper in the distribution system.

All new or reactivated community systems must submit the Lead and Copper Sample Site Selection Pool and Materials Survey Checklist for Community Water Systems [TCEQ-Form 20467(a)], while NTNC water systems must submit the Lead and Copper Sample Site Selection Pool and Materials Survey Checklist for Non-Transient Non-Community Systems [TCEQ-Form 20467(b)], before any sampling event takes place. You are responsible for using an accredited lab for lead and copper analysis and for providing sample bottles.

After an action level exceedance community and NTNC water systems are required to conduct source water (entry point) lead and copper sampling.

To confirm your schedule status or to receive any additional assistance, call our main line at 512-239-4691 and ask to speak with a member of the Lead and Copper Rule team.

Location

Lead and copper samples must be collected at customer taps within the distribution system and at each entry point for source water.

Customer Taps

Lead and copper tap samples must be taken at customers' taps, where lead or copper entering the water is most likely. Include a list of the location addresses where samples for lead and copper must be taken in your monitoring plan.

When you change sample sites, you must submit a Lead and Copper Change in Sampling Sites form (TCEQ-Form 20697) to our Lead and Copper Rule coordinator for approval. You can reach the lead and copper program coordinator at 512-239-4691, or by email at <PDWS@tceq.texas.gov>. Approved 20467 forms may be included in the monitoring plan to reflect your sample sites.

Table 9 is an example of how to list your lead and copper sites.

Table 9.1. Example of a Lead and Copper Sample Site Table for a Small Community System

Site	Regular or Backup	Sample Site Address	Tier Level
LCR001	Regular	1001 Arbor Vitae Ln.	Tier 1

Site	Regular or Backup	Sample Site Address	Tier Level
LCR002	Regular	2222 Bittersweet St.	Tier 1
LCR003	Regular	3456 Cedar Pl.	Tier 1
LCR004	Regular	4999 Elder Pl.	Tier 1
LCR005	Regular	5005 Forsythia Cir.	Tier 1

Entry Points

Lead and copper source water (entry point) samples must be collected at each entry point to the distribution system.

New Water Systems

If your system is new, make sure you contact us at 512-239-4691 to speak with the Lead and Copper Rule team and ensure you do the required initial monitoring for lead and copper.

Water Quality Parameter Sampling

WQPs consist of pH, temperature, alkalinity, calcium, chloride, conductivity, hardness, iron, manganese, sodium, sulfate, total dissolved solids, and inhibitors (silica and orthophosphate) if added to the system to control corrosive water. WQP samples must be taken at:

1. Outside, fully flushed, representative samples stations or taps in the distribution system.
2. Each entry point to the distribution system. Entry points are defined as being located after treatment but before the water enters into the distribution system.

Applicable distribution sample locations are usually the same locations where monthly bacteriological samples are taken. **Update a sampling plan with all site addresses used for sampling WQPs and keep the information in your LCR records for at least 12 years.**

Submit the WQP sampling plan to our Lead and Copper Rule coordinator for approval. After approval, update the system's monitoring plan with the new addresses or sites. See Table 9.2 for an example of a table containing all WQP requirements, both in the distribution system as well as at all entry points to the distribution system.

Table 2.2. Example of WQP Sample Sites Table for a Small Community System

Site Location	Sample Site Address
DS01	1001 Main St. (outside tap)
DS01	2222 Bittersweet St. (outside hose bib)
DS01	3456 Cedar Pl. (outside sampling station)

Site Location	Sample Site Address
PBCU001	Entry point 1 TPSW001
PBCU002	Entry point 2 TPSW002

Your PWS must be approved to collect samples and take pH and temperature (field measurements). Alternatively, your PWS can subcontract these field measurements out to an approved third party or laboratory. The laboratory you choose for analysis must be approved and accredited to analyze all required parameters. See Chapter 10 of this guidance [30 TAC 290.117(h)(4) and 30 TAC 290.119] for further instructions on approval and accreditation requirements.

For more information about lab approval, please see the Lab Approval Form for Public Water Systems (TCEQ-Form 10450) at <www.tceq.texas.gov/goto/10450>. We recommend using Internet Explorer to access the form.

All sampling information, forms used in sampling, chain of custodies, laboratory information, classification tier information, and action level exceedance information is found on our Drinking Water Lead and Copper Program webpage at <www.tceq.texas.gov/drinkingwater/chemicals/lead_copper>.

New Water Systems

If your system is new, make sure you contact us at 512-239-4691 and speak with the Lead and Copper Rule team to ensure you do the required initial monitoring for lead and copper and WQPs.

Chapter 10. Laboratory Approval Form and Instructions

This chapter includes information on the approval process for analyses run by your system, and how to request approval from us for your laboratory.

Who Must Complete the Laboratory Approval Form?

All systems performing analysis for compliance (i.e. chlorine residuals, etc.) must complete the Laboratory Approval Form for Public Water Systems (TCEQ-Form 10450). As applicable to your system, complete the Form and:

- Include it with your monitoring plan **(all community and NTNC PWSs)**.
- Submit one form for *each treatment plant* with your monitoring plan **(PWSs that treat SW or GUI)**.
- Include it with your monitoring plan and provide it to us upon request **(PWSs that treat only GW, or that purchase water – either GW or SW)**.

Laboratory Approval Procedure

PWSs must fill out and submit a Lab Approval Form for Public Water Systems (TCEQ-Form 10450) to indicate the approved-lab compliance samples for which they are responsible. We will review this form upon receipt or during a CCI and notify the system if the form is incomplete or if the methods noted are not acceptable.

If the PWS sends any of the approved-lab analyses to an outside lab (in other words, a commercial lab), that lab must be listed on the form and maintain commercial approval from us for the specified analyses.

For information on drinking water laboratory approval, give us a call at 512-239-4691 and ask for the Drinking Water Lab Approval Coordinator.

Types of Analytes

There are two classifications of analytes: approved-lab analytes and accredited-lab analytes.

PWSs may themselves perform analysis of approved-lab analytes, as long as they follow EPA and TCEQ approved methods. In some cases, PWS labs may be accredited for the approved-lab analytes.

If a lab is accredited as a Drinking Water Matrix for certain approved-lab analytes, an approval requirement for the analyte is not necessarily required.

For the accredited-lab analytes, PWS must contract with a TCEQ accredited lab for analysis.

Approved-Lab Analytes

PWSs must analyze samples at a laboratory approved by our Drinking Water Standards Section. Most systems will analyze these samples in-house using their own instruments. However, some systems will contract with a commercial laboratory for analysis. The Lab Approval Form for Public Water Systems (TCEQ-Form 10450) is our way of ensuring that systems use acceptable methods for the following approved-lab analytes:

- free and total chlorine disinfectant residual
- turbidity and total organic carbon (TOC)
- pH
- temperature
- alkalinity
- silica
- chlorine dioxide
- entry point chlorite
- calcium
- phosphate
- ultraviolet light absorbance at 254 nm (UV254)
- conductivity

Accredited-Lab Analytes

PWSs must have the following analyses performed by a lab that is accredited by our accreditation program:

- bacteriological (total coliform and fecal coliform)
- bromate and bromide
- monthly chlorite distribution system three-sample set
- lead and copper
- inorganic chemicals (IOC)
- radiochemicals
- synthetic and volatile organic chemicals (SOC and VOC)
- total trihalomethanes (TTHM) and haloacetic acids (HAA5)

Except for the bacteriological samples, lead and copper, bromate, and monthly chlorite samples, all of the accredited-lab analyte samples used for compliance are collected by our Drinking Water Compliance Sampling contractor. The contractor delivers the samples for analysis to the laboratories of either the Texas Department of State Health Services (DSHS) or the Lower Colorado River Authority (LCRA). Only these two laboratories are permitted to analyze samples for compliance purposes, with the exception of asbestos compliance samples which are sent to Crisp Analytical.

For more information on lab accreditation, visit our “Laboratory Accreditation and Certification” webpage, at <www.tceq.texas.gov/agency/qa/env_lab_accreditation.html>.

"Not Required" Analytes

Not all PWS labs are required to monitor for each approved-lab analyte. If your system is not required to conduct a specific approved-lab analyte, indicate this as "Not Required" on the Lab Approval Form for Public Water Systems (TCEQ-Form 10450).

Submitting a Drinking Water Lab Approval Form

This section describes how to submit the Lab Approval Form.

Mailing Address

Attn: Laboratory Approval Coordinator
Drinking Water Standards Section, Mail Code 155
Texas Commission on Environmental Quality
PO Box 13087
Austin, TX 78711-3087

Electronic Mail

PDWS@tceq.texas.gov

Fax Number

Attn: Laboratory Approval Coordinator
512-239-6050

Record Retention

We have rules about record retention. These rules can be found in 30 TAC Subsection 290.46(f). The calibration records for laboratory equipment must be retained for at least three years. The results of chemical analyses must be retained for at least 10 years.

Appendix A. Monitoring Plan Template Instructions

These instructions will help you complete the monitoring plan template. For more information, see the instructions in the template at <www.tceq.texas.gov/drinkingwater/monitoring_plans/PWSMonitoringPlanTemplate.pdf> (we recommend using Internet Explorer).

When filling out the monitoring plan template:

1. Read the introduction and general instructions in the monitoring plan template.

If you are a new PWS, need to revise a section of your monitoring plan, or need to update your entire plan, follow these steps.

Note: Download the monitoring plan template from our Public Water System Monitoring Plans webpage at <www.tceq.texas.gov/drinkingwater/monitoring_plans/>. The template download works best with Internet Explorer.

We require all systems to maintain an up-to-date monitoring plan on-site, and to submit revised section(s) or the entire plan to our central office as applicable.

2. Gather the attachments you must submit with the template.

The items that must be attached to the monitoring plan template are described throughout the template itself but are also summarized below:

Plant Schematic

Every water plant contributing to a system's provided water needs to be included on its own process schematic. A full description of required items can be found on page 4 of the monitoring plan template.

Revised Total Coliform Rule (RTCR) Sample Siting Plan and Map

The stand-alone RTCR sample siting plan, which contains sample locations and data pertinent to the new revisions of the coliform rule. This plan also requires a detailed map of the distribution system. Use our Revised Total Coliform Rule Sample Siting Plan Template, available at <www.tceq.texas.gov/drinkingwater/microbial/revised-total-coliform-rule/> to create the plan for your PWS.

Nitrification Action Plan (NAP) – if you use chloramines

Include a copy of your NAP providing in-depth analysis of how your system contains nitrification within your distribution system.

3. Perform necessary research and complete the monitoring plan template.

Information to assist you in completing the monitoring plan template, from water system facilities to sample schedules, can be found through the Drinking Water Watch application at <www.tceq.texas.gov/goto/dww>.

- Mark all sections in the table of contents applicable to your system and fill in all fields requesting information.
- Do not complete the form as it is upon opening. After reading through the instructions the table of contents page needs to be correctly checked so that the system only transcribes information applicable to their system.

4. Contact us for help, if needed.

Your system's monitoring plan needs to be up-to-date with our rules and regulations. If you are having trouble completing the template, you may request help by calling us at 512-239-4691 and asking for the Monitoring Plan Coordinator.

You may also submit a request for free, on-site assistance through our Financial, Managerial, and Technical (FMT) Assistance program. The FMT contractor can provide help tailored to your specific needs. Learn more our the FMT program on our webpage at <www.tceq.texas.gov/drinkingwater/fmt>.

To request assistance, call 512-239-4691 and ask for the FMT Assistance program, or send an email to FMT@tceq.texas.gov.

5. Submit the monitoring plan template and necessary attachments.

You must have an up-to-date monitoring plan for all systems. Submit the plan if applicable, or voluntarily upon any revisions.

Keep a copy on-site and maintain any revisions. Submit the form and attachments to either of the following:

Physical Copies

Attn: Monitoring Plan Coordinator
Drinking Water Special Functions Section, Mail Code 155
Texas Commission on Environmental Quality
PO Box 13087
Austin, TX 78711-3087

Electronic Copies

PDWS@tceq.texas.gov

Assistance with Your Points of Contact

You can view our database for your system's points of contact through the Drinking Water Watch: <www.tceq.texas.gov/goto/dww>.

If the information on Drinking Water Watch is incorrect or out-of-date, you should contact our Drinking Water Inventory and Protection Team at either PWSINVEN@tceq.texas.gov or by calling 512-239-4691 and asking to speak with a member of the team.

A: Points of Contact (POC) Information

Purpose of Section

For correspondence purposes, it is imperative to keep the contact information for your system is current. You must include contact information for everyone at your PWS, from the highest official to the operators or persons performing day-to-day duties and maintenance. We recommend providing as much information for each contact as possible (for example: business phone, cell phone, physical address, email address, etc.).

Contacts need to be listed with a legitimate mailing address to receive any letters discussing but not limited to any rule changes, information or data requests, and notices of violation. Update your PWSs contacts with us as soon as they change and make sure your contacts are current.

A Note on Financial and Emergency Contacts

Financial and emergency contacts are both addressed through their own update protocol – they are not in included in the monitoring plan template. A financial contact can be updated when you receive an invoice for your public health service fee from us. Emergency contacts are typically updated through the emergency contact form that we send out to systems either once a year or every other year. Both, however, may be updated at any given time by sending an email to our Inventory Team at <PWSINVEN@tceq.texas.gov> containing the appropriate information for the change.

POC Information

The template includes a list of contacts you may have at your system. Enter a valid mailing address, city, state, and ZIP code in the fields for:

1. **'Administrative Contact Name'**
2. **'Owner/Legal Entity Contact Name'**
3. **'Public Water System Contact Name'**

Provide additional contact information by listing a work phone (plus extension if applicable), fax number, and email address.

- If more than one contact is needed, click the **'Add additional…'** button (below the fields of interest).

If you do not need an additional administrative contact, but clicked the button, simply click the 'Remove' button (located just below the 'Email' field). A minimum of one block of information is required, so clicking this button will only remove extra fields until only one contact is left.

Signature Block

Your signature confirms that the information provided is true and complete.

Read the agreement *before* signing in the **'Signature'** field. The signature does not have to come from the administrative contact, though recommended, as long as the person who does sign has the authority to do so on behalf of the PWS.

Fill in the other fields (Name, Title, Date) with accurate information; the date is the day of the monitoring plan's completion.

Revisit this page after the entire template has been completed and checked for accuracy and proper completion. The signature block in this document may be sealed with a digital ID, or it may be physically signed after printing.

Create a Digital ID

Follow these steps to **create a digital ID**:

1. Click on the signature block to open a pop-up window (marked by a small signature flag on the left-hand side of the cell).
2. Select the option **'A new digital ID I want to create now'** when asked how to sign the document.
3. Choose how you wish to store the digital ID (either as a file on your computer or through the Windows Certificate Store). For ease of access, choose the first option **'New PKCS#12 digital ID file.'**
4. Enter the applicable information in the fields provided, leaving the last three fields untouched (leave the default values). Only your legal name and email fields are mandatory.
5. Choose where on your computer you want to store your digital ID and make note of the location.
6. Enter a password to lock the signature.
7. Click **'Finish.'**

B: Source Details

Purpose of Section

A PWS's source(s) dictates its compliance plan, including the:

- Rules it must comply with.
- Strictness of the disinfection process.

- Schedules of many compliance samples ranging from the entry point contractor-collected samples to the disinfectant residual throughout the distribution system.

This this part of the template confirms not only the main source of water for a system, but also any interconnect your system may have, which may assist in feeding the distribution system.

Sources

Any active source will have a TCEQ Source ID once approved and be displayed on DWW. For each source at your PWS:

1. **'TCEQ Source ID':** enter the source's assigned ID in the format of "#**PWSID**#."
    a. The first unique value will be based on the type of the source: '**S**' for surface water intake, '**G**' for groundwater wells, and '**P**' for any type of purchased water.
    b. The second unique value depends on the order of the source sorted by the type.
    c. For instance, if a system has two groundwater wells the Source ID's would be '**G1234567A**' and '**G1234567B**.' However, if the same system starts receiving water from a nearby system the Source ID for the purchased interconnect would be '**P1234567A**.'
2. **'Source Name'**: record the source name. It must reflect the body of water, well name, or name of the PWS selling water to your system.
3. **'Source Location':** provide the address, or relative physical description when applicable.
4. **'Availability':** select the source's availability from the dropdown menu:
    a. **'Permanent (Active)'**: this is default value for the "Availability" field. You should list permanent sources first.
    b. **'Seasonal'**: these sources are only used during a particularly active time of the year, such as a well being used during higher demand due to vacation season, summer school, or summer camp.
    c. **'Interim'**: interim sources will only be used for a finite time usually while a certain event occurs, such as during construction or an irregular high demand period.
    d. **'Emergency'**: these sources will be a permanently established connection but only provided to customers during absolutely necessary conditions. The most common example of emergency sources are interconnects from other systems that are used when the system's normal source of water may not meet normal capacity.
    e. **'Other'**: use this category for any activity of a source that does not fit the aforementioned descriptions.

5. **'Does this water system purchase water from another water system?'**
    a. Check **'Yes'** if your system purchases water from another PWS. If your system purchases any water from another PWS, complete the **'Purchase Water Sources'** information (discussed in the next subheading).

b. Check **'No'** if your system does ***not*** purchase water from another PWS. If your PWS does not purchase water, skip to **"C: Water Treatment Details."**

If your PWS has more than one source of water, click the button labeled **'Click here to add additional source'** to add a new row. To add multiple rows at once, click the button labeled **'Click here to add five additional sources.'** If you have added too many rows, click the **'-'** button at the beginning of every row to remove that row.

Note: you do not need to list any inactive sources. Omitting a source from this table notifies us that the source is not currently being used.

Purchase Water Sources

Provide details about your purchased water interconnect. For each provider enter:

- **'Provider Name'**
- **'Master Meter Location'**: an address or description of physical location.
- **'Water type'**: **GW** for groundwater, **SW** for surface water, or **GUI** if the water is groundwater under the influence of surface water.
- **'Raw or Treated'**: indicate if the water received has not been treated and has no residual (raw), or if the prior system has injected some sort of treatment before it reaches your system (treated).
- **'Availability'**: based on the same five categories outlined in the Availability subsection above.

Click the '**Click here to add additional source**' button if you have more than one interconnect and need additional rows to list this information. If you have added too many rows, click the **'-'** button at the beginning of any row to remove that row.

C: Water Treatment Details

Purpose of Section

We use the information you provide in this section of the template to schedule and run compliance testing. The type of source water your system uses:

- Determines the disinfection process.
- Influences criteria and concentrations used for the system's compliance.
- Establishes certain sampling requirements a system must follow.

For example, a system treating raw surface water will have more steps in their overall disinfection process than a system treating groundwater from a well. However, the full treatment process for some systems may be as simple as injecting gas chlorine at one location before storage. This would still be viewed as a treatment plant since it involves the treatment of water though it may not be a large treatment plant facility.

Treatment Flow

Enter your system's treatment plants one at a time until all plants or injector locations are listed. Note: a plant may be fed by a single source or all of a system's active sources – indicate which sources identified by Source ID feed each active treatment plant.

1. **'Water Plant'**: each plant, similar to all other water facilities, is assigned a specific TCEQ ID number that is unique to the facility. Treatment plants are given the ID format of "**TP#####.**"
2. **'Contributing Sources'**: a plant may be fed by a single source or all of a system's active sources – indicate which sources identified by Source ID that feed each plant the system actively uses.
3. **'Disinfection Zone'** and '**Treatment Processes'**: list disinfection zones in ascending order starting with '**D1.**' Enter treatment processes for that zone in the order they occur, separated by commas. If your system has only one disinfection step, simply list this step within the treatment process column.

If your PWS has more than on treatment plant, click the **'Click here to add additional disinfection zone'** button to add another row. If you have added too many rows, click the **'-'** button at the beginning of any row to delete that row.

Specifically, for surface water or groundwater under the influence of surface water systems, their treatment plant(s) will have multiple disinfection zones that start and end at specific injection points. These systems will already have an approved contact time (CT) study listing this information. Not every system will add treatment to the water within their system, especially those that only distribute raw water to customers or smaller systems that receive water that is already treated and has a strong residual.

D: Entry Points, Storage Facilities, and Distribution Details

Purpose of Section

Part of this section helps you understand how many entry points your system contains, and thus the particular sample schedules required for compliance purposes.

After the treatment process, water within a system will make its way toward the distribution system and the customers. An entry point is not a fixed location, per say, but it is defined as a location after treatment and before the first connection. Any water feeding into the distribution system needs to have an associated entry point and certain samples collected at the entry point to ensure water delivered to each customer is safe for human consumption.

To meet demand, your PWS may store water before distribution, throughout distribution, or both. Water storage methods are: ground storage tanks, elevated storage tanks, standpipes, clearwells, pressure tanks, and elevated ground storage tanks.

Certain details of a system's distribution system can be beneficial in determining sanitary defects or other problems occurring within a system. For example:

- Pressure planes contain unique characteristics depending on the variation of pressure and if they are isolated or interconnected.
- Booster disinfection can increase the chance of disinfection byproducts forming as a side effect of increasing the residual to the far reaches of the system.

This information is pertinent in the ability to minimize the overall effects caused by total TTHM and HAA5.

Systems receiving water from your supply may have issues passed along to their system that causes them to be out of compliance if a defect exists within your system. It is key to not only know this information yourself but also to pass information along to applicable recipients based on the location of any issues.

D.1: Entry Points

For each *active* entry point at your system, enter:

1. **'Entry Point ID':** enter your assigned TCEQ ID. The ID will be in the format of "**EP**###" and in ascending order based on the number of entry points a system has had throughout their history. Once an entry point is activated, the ID remains with it even if the entry point is deactivated – IDs can never be recycled.
2. **'Contributing Sources':** enter all sources by their Source ID that feed into each respective entry point.
3. **'Entry Point Location':** an address or relative physical location.
4. **'Sampling Location':** the actual sample location, such as "**tap on storage tank**," "**lab sink**," etc.

If your system has more than one entry point, click the '**Click here to add additional entry point'** button to add a new row to input the respective information for additional entry points. If you have added too many rows, click the **'-'** button at the beginning of any row to delete that row.

D.2: Water Storage Facilities

1. **'Storage Location'**: enter the physical address for each water storage facility.
2. **'Storage Facility Type'**: choose the type of storage from the drop-down list (Ground Storage, Elevated Storage, Standpipe, Clearwell, Pressure Tank, and Elevated Ground Storage).
3. **'Contributing Sources'**: list all sources by Source ID that contribute to each particular storage facility.

If you have more than one storage facility, click the **'Click here to add additional water storage facility'** to add a row or if you have many facilities you need to add you can click the **'Click here to add five additional water storage facilities'** button to add

five rows at once. If you have added too many rows, click the **'-'** button at the beginning of any row to delete that row.

D.3: Distribution Details

Enter the distribution details for your PWS, as described in the subheadings of this section. If you need additional rows, click the **'Click here to add …'** button. If you have added too many rows, click the **'-'** button at the beginning of any row to remove that row.

Does the system have more than 1 pressure plane?

Answer '**Yes**' if your system contains more than one pressure plane, or '**No**' if the system does not.

If '**No**,' go to the next question about booster disinfection.

If '**Yes**,' enter details for each pressure plane:

1. **'Pressure Plane Name'**: give the pressure plane name, which may be as simple as a numerical value or it may be based on the general area.
2. **'Distribution is'**: indicate whether the pressure plane is '**Independent**' or '**Interconnected**' with another pressure plane.
3. **'Interconnected to which pressure plane(s)'**: list which pressure plane(s) it is interconnected with.
4. **'Associated with which entry point'**: list which entry point via entry point ID the pressure plane is associated.

Does the system booster disinfect in distribution?

Answer '**Yes**' if your system booster disinfects within the distribution system, or '**No**' if the system does not boost disinfect.

If '**No**,' go to the next question about selling water to other systems.

If '**Yes**,' enter details for each booster disinfection point:

1. **'Location of booster disinfection point'**: the address of the booster disinfection point.
2. **'Type of Disinfectant'**: list the type of disinfectant used, either **free** or **total**.
3. **'If applicable, pressure plane'**: list the pressure plane for the booster disinfection point, if applicable.

Does this water system sell water to any other public water system?

Answer '**Yes**' if your system sells water to another PWS, or '**No**' if the system does not sell water to another system.

If '**Yes**,' provide information for each system you sell to:

1. **'PWS ID.'**
2. **'PWS Name.'**
3. **'Raw or Treated Water?'**: indicate whether the water you are selling is **'Raw'** untreated water, or **'Treated'** water.
4. **'Master Meter GPS (X,Y) and Location'**: enter the (X,Y) coordinates ***and*** the physical address of the master meter for the respective interconnect.

Additional Information

Enter any additional information about your distribution system that might be pertinent in reviewing the system's monitoring plan in the space provided. This could include information not previously mentioned in the questions and details summarized above, such as:

- Overall shape or environment of your distribution.
- Future construction that might affect (part of) your system.
- More details on information provided in section D.3 of the template.
- Other information as necessary (etc.).

E: Surface Water Treatment Rule

Purpose of Section

For systems that treat SW or GUI, the SWTR (30 TAC 290.111) is designed to help you provide water to your customers that is safe for human consumption.

Grouping all SWTR sampling into one section will help you manage SWTR compliance.

Raw water sampling, as well as treated water samples, being in the same place will help you understand all SWTR requirements that apply to your PWS, and it will help you determine if your system is in compliance with the rule.

Information listed in this section also clarifies the requirements that apply to your system depending on its size, population, and equipment.

Review the SWTR periodically, because subsections in the rule (such as Total Organic Carbon monitoring) are subject to change. You may need to update how your system complies with the SWTR when the rule changes.

I. Disinfection Zones

You must monitor the disinfectant residual, pH, temperature, and flow rate at each disinfection zone at least once per day. For each disinfection zone, enter the following information. ***You must label the disinfection zones identical to what you did in Section (C: Water Treatment Details) of the template.***

1. **'Disinfection Zone'**: list all disinfection zones in ascending order starting with **'D1.'**
2. **'Sampling Location'**: enter the physical location of sampling.

3. **'Sampling Frequency'**: record how often samples are pulled.

To add another row to list more disinfection zones, click the '**Click here to add additional disinfection zone**' button. If you have added too many rows, click the **'-'** button at the beginning of any row to remove that row.

II. Turbidity

Ensure that your system is meeting the minimum requirements, stated in the template for both CFE and IFE.

Turbidity Monitoring

If your system uses cartridge filtration **do *not*** complete the Turbidity Monitoring information *unless you have consulted with us beforehand*.

If your system uses any other filtration provide the required information for each treatment plant:

1. **'Treatment Plant Name'**: list your first treatment plant by its TCEQ ID in the format of "**TP#####**."
2. **'Combined Filer Effluent (CFE) Sampling'**: is a three-part entry.
   a. **'Number of samples per day'**: record how many samples you take.
   b. Analysis type: check whether the analysis is an '**On-line analyzer**' or '**Bench-top method**.'
   c. **'Sampling Point'**: enter a description of the sampling point.
3. **'Individual Filter Effluent (IFE) Sampling'**: is a three-part entry.
   a. **'Number of samples per day'**: record how many samples you take.
   b. Analysis type: check whether the analysis is an 'On-line analyzer' or 'Bench-top method.'
   c. **'Sampling Point'**: enter a description of the sampling point.

If you have more than one treatment plant, click the '**Click here to add additional treatment plant**' button. If you have added too many rows, click the **'-'** button at the beginning of any row to remove that row.

Schedule of CFE Readings

Beginning with midnight, enter the scheduled times for CFE turbidity readings for nephelometric turbidity units (NTU 1, NTU 2, NTU 3, NTU 4, NTU 5, and NTU 6).

Monitoring Deviations and QA/QC Measures

If your plan for turbidity monitoring *varies from traditional monitoring*:

1. Describe your plan for turbidity monitoring and include a description of the process and the operational issues that make it different.
2. Explain the quality assurance and quality control (QA/QC) procedures followed to confirm the analysis of turbidity sampling is accurate.

We review all turbidity monitoring variations and QA/QC processes to make sure turbidity sampling is accurate and correct.

III. Entry Point Disinfectant Residual

Ensure that your system is meeting the minimum requirement stated in the paragraph describing disinfectant residual monitoring and in the accompanying table. **Important note:** systems serving more than 3,300 people must continuously monitor and record the chlorine residual, but smaller systems have the option to continuously monitor *or* take grab samples according to the table in the template.

Entry Point Residual Monitoring

Provide the required information for each treatment plant:

1. **'Treatment Plant'**: enter your system's treatment plant identified by its unique TCEQ ID in the format of "**TP**#####."
2. **'Minimum Disinfectant Residual'**: select the minimum disinfectant residual figure at the entry point (**0.2 mg/L** if your system measures free chlorine or **0.5 mg/L** for total chlorine).
3. Sampling Frequency is a three-part entry for:
   a. **'Number of samples per day'**: record how many samples you take.
   b. Analysis type: check whether the analysis is an '**On-line analyzer**' or '**Bench-top method**.'
4. Check the box if the monitoring is '**Continuous**.'

If you have more than one treatment plant, click the '**Click here to add additional treatment plant**' button. If you have added too many rows, click the **'-'** button at the beginning of any row to remove that row.

IV. Long Term 2 Source Water Monitoring

Review the timeframe for LT2 sampling that all SW and GUI systems must perform. Consult with us if you have a new source and associated treatment plant, or if you are a new system under this regulation.

Provide the required information for each treatment plant:

1. **'Long Term 2 Bin Classification'**: enter the BIN classification number of your treatment plant in the '**Long Term 2 Bin classification (1-4)**' field. This classification number will be a number between 1 and 4 assigned to the specific treatment plant based on results from the first round of sampling.
2. **'Treatment Plant Name'**: list your first treatment plant by its TCEQ ID in the format of "TP#####."

If you have more than one treatment plant, click the '**Click here to add additional treatment plant**' button. If you have added too many rows, click the **'-'** button at the end of any row to remove that row.

V. Total Organic Carbon (TOC)

Does the system conduct monthly TOC monitoring?

Answer **'Yes'** if your system conducts monthly TOC monitoring or **'No'** if your system does not.

All systems must comply with the reporting requirements for the TOC rule, but only conventional systems must meet the removal criteria for compliance purposes. Review the information provided in the template, regarding taking samples according to Step 1, Step 2, or any of the eight Alternative Compliance Criteria (ACC).

TOC Sample Set

If your system meets the criteria in Step 1 or Step 2, give a physical description of the '**Sampling Location**' and indicate how many '**Samples per month**' are taken for:

1. **'Raw TOC and Alkalinity'**
2. '**Treated TOC**'

These samples make-up a complete TOC sample set. If meeting Step 1 or Step 2 removal, skip to **"VI. Treatment Technique (TT) Compliance Determination."**

Alternative Compliance Criteria (ACC) Sampling

If your system meets one of the eight ACC (instead of Step 1 or Step 2 removal), check the box for the criteria your PWS follows for compliance.

VI. Treatment Technique (TT) Compliance Determination

Read the short paragraph to understand how compliance is maintained in reporting TT.

Acute TT Violations

Provide information about the filtration system at your PWS:

1. **'Membrane Filtration'**: check '**Yes**' if your system uses membrane filtration. Check '**No**' if your system does **not** use membrane filtration. Note: the violation statement will stay in the template remain if your system uses membranes, but it will disappear if not.
2. **'Conventional Filtration'**: check '**Yes**' if your system uses conventional filtration. Check '**No**' if your system does not use conventional filtration. Note: the violation statement will stay in the template if your system uses conventional filtration, but it will disappear if not.

Non-acute TT Violations

Review the different ways systems may receive non-acute TT violations.

F: Groundwater Rule (GWR)

Purpose of Section

For systems treating groundwater, the GWR (30 TAC sections 290.109 and 290.116) establishes criteria to help you provide water to your customers that is safe for human consumption.

You must follow the minimum requirements of the GWR to avoid spreading any found sanitary defects. However, these requirements vary based on size of your system, number of groundwater wells, if your system has 4-log treatment, and if conditions exist that lead us to believe the wells may be susceptible to contamination.

I. Triggered Source Monitoring (TSM)

'Does the system have a TCEQ approved triggered source monitoring plan?'

Only the GWR compliance officer can approve a TSMP (the monitoring plan coordinator can***not*** approve a TSMP).

- Check '**Yes**' if your system has an approved TSMP. If '**Yes**,' please attach a copy of your approved TSMP.
- Check '**No** your system does not have an approved TSMP. If '**No**,' you still need to be familiar with the information provided in the template below this question.

II. Compliance Monitoring for 4-log (Inactivation of Viruses) Treatment

'Has the system received TCEQ approval to use 4-log treatment?'

The request for 4-log treatment goes through our Technical Review and Oversight Team, who also grant the approval to use 4-log treatment after their review.

- Check '**Yes**' if your system has an approved 4-log treatment. If '**Yes**' read the information below the question for requirements that apply to your system and complete the (1) '**Residual Monitoring for 4-log Compliance**' information (2) '**III. Compliance Determination for 4-log Treatment**.'
- Check '**No**' if your system has not received approval or if you do not use 4-log treatment. If '**No**' the subsequent text will collapse, and you can skip to "**IV. Assessment Source Water Monitoring**."

Residual Monitoring for 4-log Compliance

Provide the required information for each source:

1. **'Source(s)'**: list your PWS's first source in the format of "#**PWSID**#." The first unique value will be based on the type of the source, which in this case will be '**G**' for groundwater wells. Any active source will have an approved Source ID and be displayed on Drinking Water Watch. The second unique value

depends on the order of the source sorted by the type. For instance, if a system has two groundwater wells the Source IDs would be '**G1234567A**' and '**G1234567B**.'

2. **'Sampling Location'**: describe the location, such as "**tap on well head**."
3. **'Minimum Specified Residual'** has two parts:
   a. Enter the minimum value in '**mg/L at entry point.**'
   b. Check the appropriate box to indicate whether the residual is:
      i. '**Continuously monitored**' coupled with a grab sample.
      ii. '**Monitored at peak daily flow**.'

If you need to list more than one source, click the '**Click here to add additional source**' button. If you have added too many rows, click the '**-**' button at the beginning of any row to delete that row.

III. Compliance Determination for 4-log Treatment

This section only applies to the systems that checked '**Yes**' under **"II. Compliance Monitoring for 4-log (Inactivation of Viruses) Treatment."**

Check the appropriate box to show if your system serves a population of '**greater than 3,300**' or '**3,300 or fewer**' (according to the most recent data you have). Your PWS must comply with the statement that follows in the template. Note: this statement changes based on the answer you provide.

IV. Assessment Source Water Monitoring

Since not every system will be required to conduct assessment source monitoring (ASM), read the introduction paragraph in the template to if your system is required to perform ASM.

'Is the system required to conduct assessment monitoring?'

Answer '**Yes**' if your system is required to perform ASM. If '**Yes**' complete the required information about your ASM sampling.

Answer '**No**' if your system is not required to perform ASM. If '**No**' the subsequent table in the template will collapse and you can skip to **"V. Treatment Technique (TT) Compliance Determination."**

If your system is required to perform ASM, provide:

1. **'Begin date'**: enter the date ASM sampling started.
2. **'End date'**: enter the date ASM sampling ended.
3. **'List of sources to be monitored'**: list all groundwater wells in the format of "**#PWSID#**." The first unique value will be based on the type of the source, which in this case will be '**G**' for groundwater wells. Any active source will have a TCEQ Source ID and be displayed on Drinking Water Watch. The second unique value depends on the order of the source sorted by the type. For instance, if a system has two groundwater wells the Source IDs would be '**G1234567A**' and '**G1234567B**.'

4. **'Number of samples required at each source'**: Enter the number of samples required for your ASM sampling. Do ***not*** give a total number for the span of your ASM sampling, instead *list the number of samples required at the frequency designated in the next field ('Monitoring frequency required').*
5. **'Monitoring frequency required'**: select from the two choices (monthly or quarterly).

For example, if your system takes one sample a month you would enter the numerical value of "**1**" into the **'Number of samples required at each source'** field and select **'Monthly'** from the drop-down list for **'Monitoring frequency required.'**

'Is the monitoring a requirement of rule exception?'

Answer '**Yes**' if your ASM sampling is a result of a rule exception your system currently has. If '**Yes**' complete the required information about the exception.

Answer '**No**' if your ASM sampling is ***not*** due to an exception. If '**No**' the subsequent table in the template will collapse and you can skip to **"V. Treatment Technique (TT) Compliance Determination."**

If your ASM sampling is a result of a rule exception provide:

1. **'Date of exception approval letter'**: enter the date from letter we sent informing you of the system's required ASM sampling due to an exception.
2. **'Exception to which rule'**: list the rule this is an exception to (also in the letter from us).

V. Treatment Technique (TT) Compliance Determination

This section of the template lists the different ways a system may receive a TT violation under the GWR.

G: Revised Total Coliform Rule (RTCR) and Disinfectant Residual

Purpose of Section

The RTCR[17], found in 30 TAC sections 290.109 and 290.110, establishes a "find and fix" approach to coliform-friendly environments within your PWS. This section of the monitoring plan template gives an overview of the requirements under the rule. Systems can also review how they may remain in compliance under the rule requirements, which are different from the previous paths to compliance.

[17] The RTCR was revised (effective April 2016).

All PWSs are required to maintain a Sample Siting Plan (SSP) as an attachment to their monitoring plan. The SSP is a separate form used to document a system's coliform sample locations. Access our "Revised Total Coliform Rule Sample Siting Plan Template" at <www.tceq.texas.gov/goto/rtcr-siting-plan>.

Closely associated with coliform sampling is the disinfectant residual sampling taken in the distribution system. Sample locations are typically the same as the coliform sample locations since the criteria for both respective samples overlap. Some systems will have additional locations taken for a residual but not for bacteriological samples, which can be listed here since the SSP does not offer this option. Aside from general compliance information this section will also be used for compiling all other treatment information into a single area.

For systems actively using chloramines or chlorine dioxide, there are compliance samples to be taken at certain locations and frequencies. A NAP is a required attachment to the monitoring plan for systems using chloramines in the treatment process.

I. RTCR Sample Siting Plan (SSP)

Read the entire subsection in the template to gain an understanding of what is required in the SSP and sample analysis for compliance purposes.

If you have not completed a SSP you can download one at <www.tceq.texas.gov/drinkingwater/microbial/revised-total-coliform-rule>. ***Upon completion of your SSP, send a copy to our central office in Austin, and maintain the plan as an attachment to your overall monitoring plan.***

II. RTCR Compliance Determination

Read the background information in this section of the template. Then check the appropriate box to answer the question, **'How many samples does the water system collect every month?'**

- Check **'Less than 40'** if your system takes less than 40 coliform samples in a single month.
- Check **'40 or more'** if your system (is a larger system and) takes at least 40 coliform samples in a month.

Based on which option you check, the section just below this question in the template updates to include the final compliance statement as applicable to the situation at your PWS.

III. Disinfectant Residual Monitoring in the Distribution System

Read the introduction to understand the correlation between coliform sampling and the disinfectant residual. This paragraph in the template also gives all compliance figures to lay the foundation of how a system remains in compliance with their residual results.

Disinfectant used

Check the appropriate box to indicate the type of disinfectant used at your PSW. Select:

- '**Chlorine**' if your system only uses free chlorine and does not use chloramines in the treatment process. The minimum allowable limit at any time for measuring free chlorine is 0.2 mg/L.
- '**Chloramines**' if you inject ammonia to mix with chlorine forming chloramines. Systems monitoring for total chlorine must have a minimum residual of 0.5 mg/L at all times to remain in compliance.

Residual monitored

Check the appropriate box to indicate how often you monitor the disinfectant residual in your distribution system. Select:

- '**Every seven days**' if your system is a small groundwater or purchased-water system that contains less than 250 connections *and* serves a population less than 750.
- '**Daily**' if your system is a surface or GUI water system, or either contains at least 250 connections or serves at least 750 people.

'Select if disinfectant residual sample sites are the same as coliform sample sites (no additional sites)'

Depending on the locations of your sample sites, you will either leave this box unchecked, or you will check the box:

- Check: if **all** the sample locations for disinfectant residuals are the **exact same** as those listed in your RTCR SSP.
- Uncheck: if there are any locations where a residual is taken but that location is not listed in your RTCR SSP.

If checked, the 'Additional Disinfectant Residual Sampling Site in Distribution' portion of the template will disappear and you can skip to section **"IV. Alternative Disinfection Monitoring."**

'Additional Disinfectant Residual Sampling Site in Distribution'

If unchecked, provide the following for each additional site:

1. '**Sampling Frequency**'
2. '**Sampling Location**'

If you have more than one additional location, click the '**Click here to add one additional sampling location**' to add a row or if you have many locations you need to add you can click the '**Click here to add five additional sampling locations**' button to add five rows at once. If you have added too many rows, click the '**-**' button at the beginning of any row to delete that row.

IV. Alternative Disinfection Monitoring

'Chloramines'

Check '**Yes**' if your water system measures total chlorine and has chloramines in the distribution system. If you checked '**Yes**' fill out the corresponding table with basic information from your NAP and attach your NAP to the monitoring plan.

Check '**No**' if your system measures free chlorine and does not have chloramines in the distribution system. If '**No**' the table will collapse and you may proceed to the next question about any alternative disinfection monitoring within your system.

If **'Yes,'** enter the (1) **'Entry Point Sampling Frequency,'** (2) **'Distribution Sampling Frequency,'** and (3) **'Distribution Sampling Location'** for:

- **'Free Ammonia'**
- **'Monochloramine'**
- **'Total Chlorine'**
- **'Nitrate / Nitrite'**

'Chlorine Dioxide'

Check '**Yes**' if chlorine dioxide is used as part of your system's overall treatment process. If '**Yes**,' you should also check the box to show that you are currently '**Submitting ClO_2MOR?**' – because all systems using chlorine dioxide need to be submitting operating reports on a monthly basis. Continue to the fill out all required information if you did check '**Yes**'

Check '**No**' if you do not use chlorine dioxide at all, and skip to **"H: Inorganic, Organic, and Radionuclide Rules."**

If **'Yes,'** after reading the overarching principle for chlorine dioxide samples, provide the requested information:

1. Check the correct box to show whether your '**System re-chlorinates in distribution**' or '**System does not re-chlorinate in distribution**.'
   a. This question asks if you boost the residual within your distribution system by adding chlorine treatment after the entry point or not.
   b. Depending on which option is selected, only one table will remain visible for the you to complete.
2. Enter the (1) **'Sampling Location'** and (2) **'Sampling Frequency'** for:
   a. '**Entry Point ClO_2**'
   b. '**Distribution ClO_2**' (for sites that re-chlorinate provide the distribution data for: Site #1, Site #2 and Site #3).

If you need to list more than one entry point, click the **'Click here to add one additional entry point'** button. If you have added too many entry points, click the '**Click here to remove one additional entry point**' button found in red just below the button to add an entry point.

H: Inorganic, Organic, and Radionuclide Rules

Purpose of Section

This section covers all the entry point sampling, along with the distribution asbestos sample collected by our contractor.

Use this section to help you understand and track what is being sampled at your system.

This section also contains information relating to schedule changes from elevated levels for inorganic, organic, and radionuclides.

The information in this section of the template, coupled with lab report data, will help you know what the future sampling schedule will be for any of these analytes.

I. Inorganic Monitoring Requirements

Every analyte our third-party contractor could sample for is listed in the template. The majority of items in the list are individual analytes that are only monitored on a case-by-case basis, when they are applicable to your system. These case-by-case analytes are set to '**No**' by default – leave them marked '**No**' if none of these samples are collected.

Indicate the analytes sampled at your system by checking

- '**Yes**' for any analyte or analyte group sampled on behalf of the system by one of our contractors.
- '**No**' if the system is not sampled for that the analyte or analyte group.

Use information from Drinking Water Watch to complete this table and subsequent sections. When viewing DWW, be sure to review both the "Group Non-TCR Sample Schedules" and the section below labeled "Individual Non-TCR Sample Schedules." Transient systems will have some of the same analytes monitored as community and NTNC systems under a separate group called "Secondaries."

Complete the Schedule

Depending on which rows have '**Yes**' checked, the next table in the template will auto-populate with rows for each analyte you checked. For each analyte in this table:

- **'Entry Point(s)'**: enter the TCEQ ID in the format of "**EP###**" with only one entry point per row.
- **'Frequency'**: select the frequency for each analyte or analyte group based on the available options (options provided are appropriate for the specific analyte).
- **'Additional Comments'**: add any pertinent information such as why the current schedule exists, last sample taken, etc.

Each schedule per entry point needs its own row of information. If your system contains more than one entry point, click the '**+**' button located within the first column

at the very beginning of each row. If you have added too many rows, click the **'-'** button at the end of a row to delete that row.

Asbestos Schedule

The last section of this table is dedicated to asbestos monitoring and this sampling occurs within the distribution system rather than an entry point.

Indicate the '**Frequency**' that asbestos samples are taken for your system along with the address of the '**Distribution Sampling Location**.'

II. Organic Monitoring Requirements

The tables in this section are visible by default, but a '**Show Table**' option is available in case you accidentally select the '**System is not sampled for** …' option when it does in fact have these groups sampled.

If your system does not have any samples collected for organic contaminants, select the '**System is not sampled for SOC/VOC**' and '**System is not sampled for SOC Methods**' options and skip to **"III. Radionuclide Monitoring Requirements."**

Entry Point Organic Sampling Schedules

If your system is sampled for synthetic organic chemicals and volatile organic chemicals (SOC/VOC) provide the following for your system's first entry point:

- **'Entry Point ID(s)'**: enter the TCEQ ID in the format of "EP###" with only one entry point per row.
- **'VOC Sampling Frequency'**: select the correct frequency for your sampling.
- **'SOC5 Sampling Frequency'**: select the correct frequency for your sampling.

If your system has more than one entry point, click the '**Click here to add one additional entry point**' button. If you have added too many rows, click the **'-'** button at the beginning of any row to delete that row.

Entry Point SOC Method Sampling Schedules

If SOC method sampling is conducted at your system, provide the following for the first entry point:

- **'Entry Point ID(s)':** enter the TCEQ ID in the format of "EP###" with only one entry point per row.
- **'SOC Method 504'**: select the sampling schedule.
- **'SOC Method 515'**: select the sampling schedule.
- **'SOC Method 531'**: select the sampling schedule.

PWSs will either be sampled with all three methods, or none at all. However, the separate methods might be on different schedules.

If your system has more than one entry point, click the '**Click here to add one additional entry point**' button. If you have added too many rows, click the **'-'** button at the beginning of any row to delete that row.

III. Radionuclide Monitoring Requirements

If your system does not have any samples collected for radionuclides, select the '**System is not sampled for Radionuclides**' option and skip to **"IV. Increased Monitoring Requirement."** If you accidentally hide the Radionuclide table, select the **'Show Table'** option to make the required table reappear.

'Entry Point Rad Sampling Schedule'

If your system is sampled for Radionuclides provide the following for your system's first entry point:

- **'Entry Point ID(s)'**: enter the TCEQ ID in the format of "EP###" with only one entry point per row.
- **'Combined Radionuclide Sampling Frequency'**: select the sampling schedule.

If your system has more than one entry point, click the **'Click here to add one additional entry point**' button. If you have added too many rows, click the **'-'** button at the beginning of any row to delete that row.

IV. Increased Monitoring Requirement

If your system's sampling ever returns an exceedance for inorganic, organic, or radionuclide samples increased sampling will be required. Review the scenarios in the template, which outline each category of chemicals and the specific criteria for the increased sampling schedule and returning to compliance.

V. MCL Compliance Determination

Read each statement to understand how your system can return to compliance in the event of an MCL exceedance.

I: Disinfection Byproducts Rule

Purpose of Section

All community and NTNC systems must follow Stage 2 of the Disinfection Byproducts Rule found in 30 TAC Section 290.114 and 290.115[18]. DBP2 builds off the initial data found during Stage 1, as well as IDSE sampling. The biggest change from the first stage to the second is that compliance is based off location-specific results instead of it being applied across the entire distribution system. Along with total TTHM and

[18] DBP2 came into effect on October 1, 2013 for some systems and on October 1, 2014 for the rest (except TNC systems).

haloacetic acids (HAA5), other byproducts may form within the distribution system and pose a health risk to any consumers.

For systems using chlorine dioxide as part of their treatment process, a three-sample set must be taken in the distribution system to monitor the levels of chlorite at the (1) connection closest to the treatment plant, (2) a location at the system's farthest reach, and (3) a third location roughly located in the middle of the previous two locations.

For systems using ozone at a treatment plant, bromate must be monitored at the respective point of entry to the distribution system at least once a month. Section I of the monitoring plan template provides this all-inclusive section to keep track of all possible byproducts of treatment you may have to monitor.

I. Stage 2 Disinfection Byproducts

The information in this section is required for all community and NTNC systems (TNC systems are exempt from DBP sampling) since these systems are required to have DBP2 samples collected.

'Monitoring Frequency Required'

Select the frequency that DBP Stage 2 samples are collected at your system from the dropdown list.

'Stage 2 TTHM and HAA5 Sampling Sites'

For each sample location:

1. **'Site ID':** enter the Site ID in the format of "**DBP2-##.**" The specific ID for each location can be found on the Sample Points page on DWW.
2. **'Sample Site'** Location: list the:
   a. **'Address'**
   b. **'Coordinates'** (if known)
3. **'TTHM, HAA5 or Both'**: enter what the sample location is sampled for:
   a. '**Both**'
   b. '**TTHM**' only
   c. '**HAA5**' only

If your system contains more than one sample location, click the '**Click here to add additional sampling location**' button. If you have added too many rows, click the **'-'** button at the beginning of any row to delete that row.

II. Other Disinfection Byproducts

Chlorite

Check '**Yes**' if your water system uses chlorine dioxide as a treatment option, and therefore monitors chlorite. If '**Yes**,' complete the '**Chlorite Sampling Plan**' table for each applicable treatment plant.

Check '**No**' if chlorine dioxide is not used in your system. If '**No**,' the table located below the question will collapse and you can proceed to answer the next question about using ozone and monitoring bromate.

If 'Yes,' after reading the overarching principle for chlorite monitoring, provide the requested information:

1. **'Treatment Plant'**: enter the TCEQ ID for the first treatment plant that uses chlorine dioxide. Any ID for your treatment plant(s) can be found on DWW through the Water System Facilities page.
2. **'Entry Point Chlorite'**: enter the following for measuring chlorite at the entry point:
   a. **'Sampling Location':** in the format of the assigned ID "**EP###.**"
   b. **'Sampling Frequency**': how often chlorite is monitored at the entry point.
3. **'Distribution Chlorite (three-sample set)'**: list the three sample locations that make up the three-sample set within the distribution system:
   a. '**Nearest connection to the plant**'
   b. '**Middle of the distribution system**'
   c. '**Farthest reach of system**'

If more than one treatment plant uses chlorine dioxide, click the '**Click here to add one additional chlorite sample plan**' button. If you have added too many instances of the plan, click the '**Click here to remove one additional chlorite sample plan**' button (in red just below the button to add a chlorite sample plan).

Bromate

Answer '**Yes**' if your water system uses ozone as a treatment option, and therefore monitor bromate, or '**No**' if ozone is not used in your system.

If '**Yes**,' read the text box and indicate how many samples are taken with a given month for bromate.

If '**No**,' the information located below the question will collapse and you can proceed to the next subsection.

III. DBP2 Increased Monitoring Requirement

Read the paragraph explaining increased monitoring requirements should an exceedance occur while on a reduced schedule.

IV. DBP2 MCL Compliance Determination

Read each subsection to gain an understanding of how to remain in compliance with all disinfection byproducts: TTHM, HAA5, chlorite, and bromate.

J: Lead and Copper Rule

Purpose of Section

The Lead and Copper Rule in 30 TAC Section 290.117 is designed to help identify locations vulnerable to any exposure of lead and copper. Depending on the year and construction material of a building, it may be more susceptible to contamination of the water running through the pipes.

Part of this section in the template is an excerpt of the Sample Site Selection Pool Form (TCEQ Form 20467) that all applicable systems must complete and return to the lead and copper team. The form walks you through the process of identifying which tier a sample location might fall into, therefore containing the most susceptible locations in the sampling pool and if contamination is occurring.

For compliance purposes, you must report your lead and copper samples in the template with the same locations and in the same order as reported to the lead and copper team on TCEQ Form 20467.

Information regarding how a system falls out of compliance and the required actions to take are also in this section.

I. Lead and Copper Tap Monitoring

1. **'Number of Sampling Sites Required'**: enter the total number of sites your system is required to have in its sampling pool, not just the total number of sites being sampled.
2. **'Monitoring Frequency Required'**: select how often your system is currently set to sample for lead and copper from the dropdown menu.

Read the paragraph detailing how to select your sampling pool based on tiers, followed by the descriptions of each tier.

'Lead and Copper Tap Monitoring Sampling Sites'

Copy the information from your system's Sample Site Selection Pool Form (TCEQ Form 20467) into the template for **in the same order**:

1. **'TCEQ Site ID'**: The field should have ID numbers in the format of "**LCR###**" only.
2. **'Regular or Backup'**: select from dropdown menu.
3. **'Sample Site Address.'**
4. **'Tier Level'**: select from dropdown menu.

The locations paired to each number should also match your previously submitted Sample Site Selection Pool Form.

If you have more than five sample locations to list, click the '**Click here to add an additional sampling location**' button, or the '**Click here to add five additional sampling locations**' button if you need to add several at a time. If you have added too

many sample location rows, click the **'-'** button at the beginning of any row to delete that row.

Explanation of Procedures

Explain the exact procedures followed to ensure that the sample was properly collected before submitting it to the lab and enter the name of the laboratory used for sample analysis.

Call us at 512-239-4691 and ask for the Lead and Copper Team if you need the list of all your system's sample locations in our database or for additional assistance.

II. Increased Monitoring Requirement

Read the brief paragraphs about sampling requirements for new systems and when exceedances require a system to return to "standard/initial monitoring."

III. Action Level Exceedance Determination

This paragraph describing how a system is determined to be in exceedance and the actions that must be taken should an action level be exceeded.

K: Additional Monitoring: Rule Exceptions

Purpose of Section

This section is included in the monitoring plan template if your PWS has any rule exceptions not previously discussed or listed within the monitoring plan template.

Exceptions covered up to this point in the template are the main rule exceptions we deal with, but there are other of exceptions to the rules that may be granted. When other exceptions are granted, the PWS receives a letter from us that outlines key details and parameters of the exception.

Rule Exceptions

For rule exceptions, find the letter we sent and enter:

1. **'Date of exception approval letter'**: the date at the top of the first page.
2. **'Exception to which rule'**: the rule the exception was granted for.
3. **'Type of sample to be analyzed.'**
4. **'Sampling Location.'**
5. **'List of sources to be monitored'**: represented by the sampling location mentioned in the field above.
6. **'Frequency of sampling'**: including the '**Start date**' and '**End date**' of sampling.

If you have more than one additional exception to list, click the '**Add another rule exception**' button located below the entire segment of exception information to list. If

you have added too many rule exceptions, click the '**X**' button (in the top-left corner of any segment above the '**Date of exception approval letter**' field) to remove that entry.

L: Laboratory Information

Purpose of Section

All PWSs, regardless of source or system type, must complete a Laboratory Approval Form (TCEQ Form 10450) if analyzing water samples in any capacity for the analytes listed within the form at <www.tceq.texas.gov/goto/tx-nelap-labs>.

The template discusses the difference between accreditation and approval to help you understand why this form may be required for your system.

Also included in this section are:

- Area to record the primary laboratory used by your system.
- Option to record alternate laboratories used by your system.
- List of the accredited laboratories used for compliance purposes. You may contact these labs with questions about the contractor-collected samples.
- Drinking Water Laboratory Approval Form and Instructions, including guidance on:
  - How to Complete the Dropdown Form.
  - Submitting the Form and Related Documentation.
- Drinking Water Lab Approval Form.
- Table 1 that lists all approved methods, calibration frequencies, and minimum accuracies unique to each analyte within the form.

Laboratory Information

Read the opening paragraphs for an understanding of an approved lab versus an accredited lab and information on how to find out more about each.

Primary Laboratory

For your system's primary laboratory, provide:

1. **'Primary Laboratory'**: fill in the laboratory that analyzes the TCEQ contractor-collected samples for entry point and distribution system samples. Currently, this lab should be either DSHS or LCRA. The bill invoice for the samples will contain the name of the lab running the analysis.
2. Fill in the required fields for **'City,' 'State,' 'Zip,' 'Phone,' 'Ext.,'** and **'Fax.'**

Alternate Laboratory

If your system contracts out to for any other analyses, click the 'Add Alternate Laboratory' button, and provide:

1. **'Alternate Laboratory'**: fill in the laboratory that analyzes the TCEQ contractor-collected samples for entry point and distribution system samples. Currently, this lab should be either DSHS or LCRA. The bill invoice for the samples will contain the name of the lab running the analysis.
2. Fill in the required fields for '**City,' 'State,' 'Zip,' 'Phone,' 'Ext.,'** and **'Fax.'**

If you have more than one alternate laboratory, click the **'Add Alternate Laboratory'** button again. If you have added too many alternate labs, click the **'-'** button in the top-left corner of any entry to remove that entry.

Drinking Water Laboratory Approval Form and Instructions

The instructions page outlines who the form applies to, when it needs to be submitted, the laboratory approval procedure, analytes run by other labs, approved-lab analytes, and accredited-lab analytes.

Systems who perform analysis for any of the analytes listed under 'Approved-Lab Analytes' section of the template (even if it is simply monitoring the concentration of chlorine within their system), must complete this form and submit it to us.

How to Complete the Dropdown Form

The third page of this section guides systems in completing the form correctly. Go through each subject matter to understand what information to list on the form in each respective column.

For additional assistance, you can always review an instrument's manual for any analysis information including approved EPA method, minimum accuracy, and calibration requirements.

The table at the end of this section also includes information to assist you in completing the form.

Submitting the Form and Related Documentation

The form itself can be submitted either separately, or with the system's monitoring plan. **The operator or analyst in charge of the system's analysis must provide an original signature on the form.**

You may submit the form any of the ways listed in the template.

Drinking Water Lab Approval Form

Provide the:

1. **'Laboratory or Plant Name'**: this can be the same as the name of your PWS.
2. **'PWS ID (TCEQ Issued)'**: seven-digit PWS ID.
3. **'Lab ID No'**: this number is given during the approval or accreditation process; so, if you have never submitted a Lab Approval Form (TCEQ Form 10450) before you may leave this blank and an ID will be assigned for you.

4. **'Address,' 'City/State,'** and **'Zip'** fields: location laboratory facility, or office if the system has no official laboratory building.
5. **'Contact Name'**: the person most knowledgeable of the system and monitoring of the analytes listed.
6. **'Email'** and '**Phone'** fields: information for 'Contact Name' as provided above.
7. **'Date form completed'**: select the date from the dropdown calendar in this field.
8. **'Does this lab perform analyses for other Public Water Systems?'**: select **'No'** if you only monitor and run analysis for your system. Select **'Yes,'** if there is overlap for any of these analytes with another PWS.

Analytes and Methods

For each analyte listed, provide the:

1. **'Analytical Method'**: From each dropdown menu, select the approved EPA method under which the analysis for the specific analyte in that row is run.
2. **'Instrument Name'**: Provide the name of the actual instrument used for analysis to the best of your ability.
3. **'Accuracy'**: Enter the minimum accuracy of the instrument in the appropriate units already provided. The required minimum accuracies for each analyte can be found in the table at the end of the section.
4. **'Calibration Frequency'**: Indicate how often the instrument used for analysis is calibrated or its accuracy verified.
5. **'Calibration Method'**: In addition to the frequency, indicate the particular way the instrument is calibrated. Certain analytes must be calibrated a certain way – for more information see 30 TAC Subsection 290.46(s)(2).
6. **'NELAP Accredited'**: Select 'Yes' if your laboratory or the laboratory used is accredited for that particular analyte, or 'No' if not accredited. Attach a copy of the accreditation if any of the analytes have 'Yes' selected in this column.
7. **'PT Study'**: If 'Yes' is selected in the "NELAP Accredited" column, select 'Yes' from the dropdown and include copies of the Proficiency Test (PT) Study every six months.

'Lab Analyst or Operator Validation'

In the '**Lab Analyst or Operator's Name and Title**' field, give the name and official title of the person who oversees the analysis mentioned on the form. This can be different than the person listed in the '**Contact Name**' field at the top of the form page.

The '**Lab Analyst or Operator's Signature**' field needs to be an original signature by the person from the previous field.

*Do not write or type anything into the section that says **'TCEQ Official Use Only.'***

Footnotes

Footnotes for the Drinking Water Lab Approval Form are located on the next page of the template to give clarification on a number of items featured on the form. The number at the beginning of footnotes in this list relates to a corresponding superscripted number on the form.

Table 1

Table 1 includes supplemental information for all analytes and corresponding fields found on the lab approval form: minimum calibration frequency, approved calibration methods, minimum accuracy, EPA methods, ASTM methods, SM methods, and other approved methods.

The table matches the same analyte order found on the form and alternates background color to make it clear to which analyte the information belongs.

Appendix B. Glossary

This appendix includes acronyms and abbreviations used through this guidance, as well as definitions for key terms.

Abbreviations and Acronyms

ACC – Alternate Compliance Criteria. A water system monitoring TOC can meet one of the ACC instead of either Step 1 or Step 2 removal to remain in compliance.
AWWA – American Water Works Association.
BDL – Below Detection Limit. If a contaminant is measured in a concentration lower than that at which a given method can be accurately used, it is considered BDL. Often, a BDL reading is reported as zero. See MDL.
BF – Baffling Factor. The BF is used to account for potential short circuiting when determining the effective contact time for calculating CT.
CCI – Comprehensive Compliance Inspection. A sanitary survey performed by TCEQ regional staff.
CCN – Certificate of Convenience and Necessity.
CCR – Consumer Confidence Report. An annual report that community water systems must deliver to their customers summarizing information regarding source water, detected drinking water contaminants, and other information.
CDS – Combined Distribution System.
CFE – Combined Filter Effluent. Water produced by all of the filters at a surface water treatment plant after it has been blended.
CFR – Code of Federal Regulations.
CT – Concentration-Time (the product of disinfectant concentration and effective time in contact with the water [T10]). This value describes the effectiveness of a given level of disinfectant in a given unit process.
CWS – Community Water System.
DBP – Disinfection Byproduct. An undesirable byproduct of beneficial disinfection.
DBPP – Disinfection Byproduct Precursor. Molecules present in natural water that will tend to form disinfection byproducts when the water is disinfected. The EPA is using total organic carbon (TOC) and specific ultraviolet absorbance (SUVA) as surrogates for DBPP.
DBP1 – Stage 1 Disinfectants and Disinfection Byproducts Rule.
DBP2 – Stage 2 Disinfectants and Disinfection Byproducts Rule.
DOC – Dissolved Organic Carbon. This group parameter measures the total amount of carbon present in organic molecules dissolved in the water. Basically, it is done on the same machine as total organic carbon (TOC), but the sample is filtered before analysis.
DWW – Drinking Water Watch. The EPA's web-based library of all data for PWSs. Texas data is available at www.tceq.texas.gov/goto/dww and national data is available at <www.epa.gov/enviro/html/sdwis/sdwis_query.html>.
EPA – the United States Environmental Protection Agency.
GUI – Groundwater Under the Direct Influence of SW. For regulatory purposes, GUI is subject to the same requirements as SW.
GW – Groundwater.

GWR – Ground Water Rule. The GWR, requiring raw water sampling, corrective action in response to detection of viral indicators, and notification of significant deficiencies, became effective starting Dec. 1, 2009.
HAA – Haloacetic Acid (a DBP). There are nine different HAAs that contain bromine, chlorine, or both, although only five of these are currently regulated.
HAA5 – A specific group of five haloacetic acids. DBP1 and DBP2 set a maximum contaminant level (MCL) for the sum of the following five HAAs: monochloroacetic acid (MCAA), dichloroacetic acid (DCAA), trichloroacetic acid (TCAA), monobromoacetic acid (MBAA), and dibromoacetic acid (DBAA).
HAAFP – Haloacetic Acid Formation Potential. The theoretical maximum amount of HAA a given source of water can form.
HDT – Hydraulic Detention Time.
IDSE – Initial Distribution System Evaluation.
IFE – Individual Filter Effluent. Water produced by a single filter.
LRAA – Locational Running Annual Average.
LT2 – Long Term 2 Enhanced Surface Water Treatment Rule.
MCL – Maximum Contaminant Level. The concentration level of a contaminant that is regulated. If a system has a contaminant concentration greater than the MCL, they may be in violation of the regulations. See RAA.
MCLG – Maximum Contaminant Level Goal. The health-effects based ideal maximum level for a contaminant. This is not the regulated concentration.
MDL – Method Detection Limit. The concentration below which a given method cannot accurately measure concentration. See BDL.
MOR – Monthly Operating Report.
MRDL – Maximum Residual Disinfectant Limit. EPA regulations establish these limits on the allowable concentration of disinfectant leaving a plant.
MRDLG – Maximum Residual Disinfectant Limit Goal.
NAP – Nitrification Action Plan. Any water system that measures a total chlorine residual must maintain a NAP to fight against nitrification within their distribution.
NELAP – National Environmental Laboratory Accreditation Program.
NTNC – Non-Transient, Non-Community Water System. A water system that serves the same people all year but is not a community. A school or factory may be a NTNC.
NTU – Nephelometric Turbidity Unit. A measurement of the cloudiness of water. Turbidity monitoring is required at all SW and GUI treatment plants.
PWS – Public Water System.
PWSID – PWS Identification Number.
RAA – Running Annual Average.
RTCR – Revised Total Coliform Rule.
SDWA – Safe Drinking Water Act.
SDWIS – Safe Drinking Water Information System. The database of record for EPA drinking water quality data, also known as SWRL, for "SDWIS-Web Release." The online form of this data is known as Drinking Water Watch. Texas data is available at <www.tceq.texas.gov/goto/dww> and national data is available at <www.epa.gov/enviro/html/sdwis/sdwis_query.html>.
SCL – Secondary Constituent Level.
SOC – Synthetic Organic Chemical.
SUVA – Specific Ultraviolet Absorbance.
SW – Surface Water.
SWTP – Surface Water Treatment Plant.

SWTR – Surface Water Treatment Rule. This is the master rule that all SW and GUI systems must follow and contains many rules within it, such as LT2, IFE, CFE, TOC, and disinfection zone sampling.
T – Detention Time (see HDT) or Temperature.
T10 – Effective Contact Time. The time within which 10 percent of a tracer material will have passed through a unit process. Theoretical T10 can be calculated by multiplying the baffling factor (BF) by the theoretical hydraulic detention time (HDT).
TCEQ – Texas Commission on Environmental Quality. Before Sept. 1, 2002, the TCEQ was the Texas Natural Resource Conservation Commission.
TEEX – Texas Engineering Extension Service.
THM – Trihalomethane (a DBP). These are halogenated organic molecules with one carbon, three halogens, and one hydrogen. The four THMs of interest are chloroform (three chlorines, also called "trichloromethane"), dichlorobromomethane, dibromochloromethane, and bromoform (a molecule containing three bromines; also called "tribromomethane").
TNC – Transient, Non-Community Water System.
TNRCC – Texas Natural Resource Conservation Commission. The former name of the TCEQ until Sept. 1, 2002.
TOC – Total Organic Carbon. A group parameter measuring the total amount of carbon in water present as organic molecules. The EPA is using TOC as a surrogate for DBPPs in the DBP1. See DOC.
TSM – Triggered Source Monitoring.
TSMP – Triggered Source Monitoring Plan.
TTHM – Total Trihalomethanes. The sum of the four THMs upon which compliance is based.
TWDB – Texas Water Development Board.
TWUA – Texas Water Utilities Association.
UV – Ultraviolet.
UV254 – Absorbance of ultraviolet light at a wavelength of 254 nanometers, measured in units of inverse length.
VOC – Volatile Organic Chemical, Volatile Organic Contaminant, or Volatile Organic Compound.

Terms and Definitions

The definitions in this publication are provided for 30 TAC 290 Subchapter F: Drinking Water Standards Governing Drinking Water Quality and Reporting Requirements for Public Water Systems. Refer to the preface of this guide to learn how to obtain copies of regulations.

Accredited laboratory – a laboratory that is NELAP accredited through our accreditation program. For answers to your questions about lab accreditation, contact our Quality Assurance Section at 512-239-5420.

Approved laboratory – a laboratory that is approved by our lab approval program. To be approved, the laboratory must submit and have approved, the Lab Approval Form included in Section L of the monitoring plan template or on our website. For answers to your questions about laboratory approval, contact us at 512-239-4691 and ask for the lab approval coordinator.

Clearwell – a storage basin that allows the disinfectant to inactivate remaining pathogens.

Combined distribution system (CDS) – interconnected distribution system consisting of the distribution systems of wholesale systems and of the consecutive systems that receive finished water.

Community water system – a public water system that has a potential to serve at least 15 residential service connections on a year-round basis, or that serves at least 25 residents on a year-round basis.

Compliance sample – sample that a public water system is required to collect and report to us in order to determine compliance with the Drinking Water Standards (30 TAC, Subchapter F: Drinking Water Standards Governing Drinking Water Quality and Reporting Requirement for Public Water Systems).

Concentration-time – the product of disinfectant concentration and effective contact time (T10). This value describes the effectiveness of a given level of disinfectant in a given unit process.

Demand water source – a well, surface source, or purchased-water source that is used on a regular basis, usually annually, to meet peak demand. Demand water sources are included in source water capacity compliance calculations.

Disinfection zone – a segment of the treatment process that begins at a disinfectant application point and ends at the next downstream disinfectant application, or residual, sampling point. Every disinfectant injection point is the start of a new disinfection zone, even if it is not always used. Every injection point must have an associated monitoring point. However, a plant may have only one disinfectant point and choose to monitor at more than one point, creating multiple disinfection zones.

Drinking water – all water distributed by any agency or individual, public or private, for the purpose of human consumption, or which may be used in the preparation of foods or beverages or for the cleaning of any utensil or article used in the course of preparation or consumption of food or beverages for human beings. The term “drinking water” also includes all water supplied for human consumption or used by any institution catering to the public. In this document, the terms “drinking water,” “potable water,” and “finished water” are used to mean the same thing:

water that has been treated in accordance with our standards and which is delivered to customers for human consumption by public water systems.

Effective contact time (T10) – the time within which 10 percent of a tracer material will have passed through a unit process. Theoretical T10 can be calculated by multiplying the baffling factor (BF) by the theoretical hydraulic detention time (HDT).

Elevated ground storage tank – a storage unit otherwise defined as a ground storage tank but is at a high enough elevation to provide water pressure through gravity.

Elevated storage tank – a storage unit containing treated water that is purposefully elevated in order to deliver water with sufficient pressure, should it be necessary.

Emergency source – a well or purchased-water source that is not used on an annual basis, but is only maintained for use under emergency conditions, such as fire or loss of a non-emergency source. Emergency water sources are not included in source water capacity compliance calculations.

Entry point (EP) – any point where treated water enters the distribution system. Entry points to the distribution system may include points where chlorinated well water, treated surface water, or water purchased from another supplier enters the distribution system.

Ground storage tank (GST) – a storage unit, located at ground level, that contains treated water either before or throughout the distribution system.

Groundwater Rule (GWR) – rule requiring raw water sampling, corrective action in response to detection of viral indicators, and notification of significant deficiencies regarding groundwater wells.

Groundwater under the direct influence of surface water (GUI) – any water beneath the surface of the ground that is subject to surface water intrusion. This may be shown by the presence of insects, macroorganisms, algae, or large-diameter pathogens such as Giardia lamblia or Cryptosporidium [30 TAC 290.38(34)(A)]; by significant and relatively rapid shifts in water characteristics, such as turbidity, temperature, conductivity, or pH, which closely correlate to climatological or surface water conditions [30 TAC 290.38(34)(B)]; or by geological circumstances [30 TAC 290.38(34)(C)].

Interconnect – a physical connection between two public water supply systems.

Locational running annual average (LRAA) - the average of all sample results collected at one specific site for the most recent twelve months, four quarters, or one year.

Maximum contaminant level (MCL) – a primary MCL is some health-based level below which the EPA considers water safe to drink. Compliance with MCLs is often not based on the result of a single sample, but instead is calculated. For instance, compliance could be based on whether the average of all samples collected in a year is over the MCL. See “Running annual average.”

Nitrification action plan (NAP) – a specific plan designed to monitor criteria that ensure chloramine disinfection is successful. The plan assists you in preventing or responding to nitrification in your system by sampling for total chlorine, free ammonia, monochloramine, nitrite and nitrate at the entry point, as well as nitrite and nitrate within the distribution system. Free chlorine and pH may also be sampled for in the event of a temporary conversion due to a NAP action or if a system contains low alkalinity, respectively.

Nonregulatory sample – a sample that a water system collects in order to make operational decisions, but that does not have to be reported.

Non-transient, non-community (NTNC) system – a public water system that is not a community water system and regularly serves at least 25 of the same persons at least six months out of the year.

Pressure plane – an area that is hydraulically separate from another.

Pressure tank – a storage unit that uses compressed air to bear down on water and draw it out of the tank when needed. Once below a certain amount, water is then pumped to refill the pressure tank instead of pumps turning off and on each time water is drawn.

Public water system (PWS) – a system that provides to the public water for human consumption through pipes or other constructed conveyances, which includes all uses described under the definition for drinking water. Such a system must have at least 15 service connections or serve at least 25 individuals at least 60 days out of the year. This term includes any collection, treatment, storage, and distribution facilities under the control of the operator of such system and used primarily in connection with such system; and any collection or pretreatment storage facilities not under such control that are used primarily in connection with such system. When two or more systems owned by the same entity are combined to serve more than 25 people at least 60 days out of the year, the combined operation will be considered a PWS. An individual is considered served by a water system if they live, work, or have employees in a place where drinking water is supplied by the system.

Purchased-water system – a PWS that purchases (or otherwise receives) at least some portion of its potable water from a different PWS. A purchased-water system that operates as a "distribution-only" system retains responsibility for managing drinking water quality and compliance with Texas rules within the distribution system. When a seller (or provider) takes responsibility for the Texas rules within the purchaser's distribution system, we may consolidate the two systems under the provider's PWS ID.

Raw water – water that has not had any chemicals added to it and before the overall treatment process begins.

Running annual average (RAA) – the average of all sample results collected in the most recent twelve months, four quarters, or one year.

Sampling site – the site at which a sample is collected.

Standpipe – a high tank, usually small in diameter compared to height, for holding water and to maintain water pressure.

Surface water treatment rule (SWTR) – the overarching rule that any public water system treating raw surface or GUI water must adhere to in order to ensure public health. With exposure to the surface, this rule enforces multiple aspects of the filtration and disinfection of the raw water.

Surface water – any water on the surface of the ground where it is subject to surface water intrusion. This may be shown by the presence of insects, macroorganisms, algae, or large-diameter pathogens such as Giardia lamblia or Cryptosporidium [30 TAC 290.38(34)(A)]; by significant and relatively rapid shifts in water characteristics, such as turbidity, temperature, conductivity, or pH [30 TAC 290.38(34)(B)]; or by geological circumstances [30 TAC 290.38(34)(C)].

Surface water intake – the physical structure capable of removing water from a surface water source.

Transient, non-community (TNC) system – a PWS that is not a community water system and serves at least 25 persons at least 60 days out of the year, yet by its

characteristics, does not meet the definition of a non-transient, non-community (NTNC) water system.

Triggered source monitoring (TSM) – raw sampling that occurs at any groundwater well in use for systems not providing at least 4-log treatment of viruses when coliform is detected within the distribution system.

Triggered source monitoring plan (TSMP) – systems with groundwater wells may receive approval from us to sample wells that represent a group that are close in proximity and hydraulically similar.

Wholesaler – any PWS that sells or otherwise provides water to another PWS. Two types of wholesalers exist: treated water wholesalers and raw water wholesalers. Both are subject to the Texas regulations.