Appendix B: MULTIPLE-BARRIER TREATMENT AND CT STUDIES

B.1 MULTIPLE-BARRIER TREATMENT

Surface water treatment plants must take a raw water source of variable quality and consistently produce high-quality finished water. Plants employ a series of treatments to remove and inactivate disease-causing organisms such as cysts, viruses, and bacteria. Each individual process represents a barrier to prevent the passage of microorganisms through the plant. By employing several barriers, the plant progressively reduces the number of organisms passing through each barrier. This multi-barrier approach minimizes the likelihood that microorganisms will pass through the entire treatment system and survive in the water supplied to the public.

The two main barriers that a surface water treatment plant must use are removal and inactivation. The combination of removal and inactivation must meet the requirements of the EPA's and TCEQ's surface water treatment rules. Removal means taking particles out of the water; inactivation means disinfecting the pathogens so they can't reproduce.

The effectiveness of the overall treatment process is often evaluated based on the percentage of pathogenic organisms that are removed or inactivated by the plant. It is hard to directly calculate the total "percent removal and/or inactivation" achieved because that involves subtracting and multiplying fractions. On the other hand, it is easy to calculate the overall effectiveness of the treatment plant by simply adding the log percent removal and inactivation achieved during each treatment step.

Log Removal and Inactivation

Log removal or *inactivation* expresses the percent of organisms removed or inactivated in terms of powers of 10, or *logs*. For example, in the second row of Table B-1, a "1-log inactivation" means a 10^1-fold, or 10-fold, reduction in the numbers of viable disease-causing organisms and, in the table's fourth row, a "2-log inactivation" means a 10^2-fold, or 100-fold, reduction. Table B-1 contains other inactivation numbers commonly used and shows what they mean. In mathematical terms, the log removal or inactivation for a specific treatment is the negative of the base-10 logarithm of the fraction of the pathogen that remains after the treatment step.

Table B-1. Removal and inactivation levels and their significance.

Removal or Inactivation Level Achieved	Reduction Factor (Fold Reduction)	% of Original Organisms		Significance
		Removed or Inactivated	Still Infectious	
0.5-log	3.16	68.4	31.6	
1.0-log	10	90	10	
1.5-log	31.6	96.8	3.16	
2.0-log	100	99	1	Minimum removal requirement for *Cryptosporidium*
2.5-log	316	99.7	0.3	
3.0-log	1000	99.9	0.1	Minimum removal or inactivation requirement for *Giardia lamblia* cysts
4.0-log	10,000	99.99	0.01	Minimum removal or inactivation requirement for viruses
5.0-log	100,000	99.999	0.001	
6.0-log	1,000,000	99.9999	0.0001	
7.0-log	10,000,000	99.99999	0.00001	

Turbidity Removal: The First Step

Multiple treatment processes (coagulation, flocculation, sedimentation, and filtration) occur in series to remove turbidity, cysts, and other disease-causing microorganisms. Removal of turbidity is an important measure of a plant's ability to produce a safe water supply because disease-causing organisms are small particles (bacteria, cysts, and viruses) within the size range normally considered as turbidity. Effective turbidity removal is an essential part of overall treatment because some of the pathogenic microorganisms are extremely resistant to chemical disinfection.

Settled Water

We do not require you to monitor the turbidity of the water leaving your clarifier or sedimentation basin. However, the settled-water turbidity level can provide you with critical information about the operation of your plant. Specifically, testing settled water turbidity can help you evaluate the effectiveness of coagulation, flocculation, and sedimentation. Consequently, we strongly recommend that you test settled-water turbidity at the outlet of each sedimentation basin or clarifier at least once per day. We also recommend that you monitor the levels of settled-water turbidity 2 to 6 hours after you change your chemical dose or you experience a significant change in raw water quality.

We have not set turbidity limits for settled water. However, you should try to keep your settled-water turbidity level of each sedimentation basin below 1.0 NTU if your raw-water turbidity level is 10 NTU or less. If your raw-water turbidity level is higher than 10 NTU, you should try to keep the settled water turbidity of each basin below 2.0 NTU. Lower settled-water turbidity levels typically mean that you can produce longer filter runs and better filtered-water quality.

Individual Filter Effluent, or Filtered Water

You are required to test levels of individual-filter-effluent (IFE) turbidity. IFE turbidity monitoring is crucial because a single filter's poor performance can be hard to detect if you are only monitoring the turbidity of the water as it leaves the entire filter bank or the clearwell.

The IFE monitoring requirements depend on the size of your system and the design of the plant. For example, if your plant uses more than two conventional filters (such as a gravity or pressure filter containing sand, anthracite, or any other granular media), it must monitor and record the turbidity level of the water produced by each filter once every 15 minutes that the filter is sending water to the clearwell. It doesn't matter how many people your plant serves; if it has more than two conventional filters, each filter must have an online turbidimeter and recorder. Figure B-1 shows the monitoring requirements for these plants.

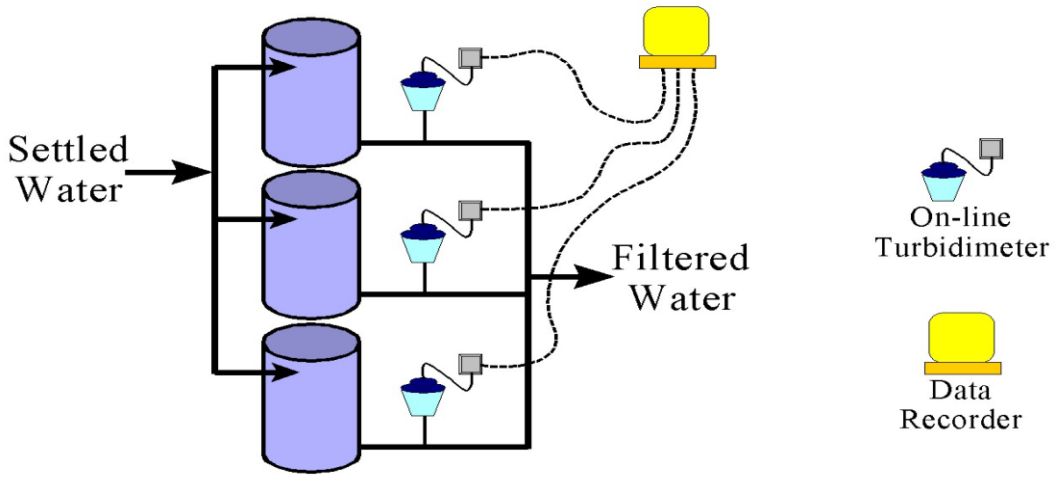

Figure B-1. Schematic showing IFE-monitoring requirements for plants with more than two conventional filters.

If your plant has only two conventional filters, the monitoring requirements depend on how many people your plant serves. If your plant serves 10,000 people or more (including those served through your wholesale connections), you must monitor and record the turbidity level of each filter at least once every 15 minutes. Option 1 in Figure B-2 represents the monitoring requirements for those larger plants. If your plant serves fewer than 10,000 people (including those served through your wholesale connections), you must either:

- monitor and record the turbidity level of each filter at least once every 15 minutes OR
- monitor and record the turbidity level of blended water entering the clearwell at least once every 15 minutes AND monitor the turbidity level leaving each filter at least once each day.

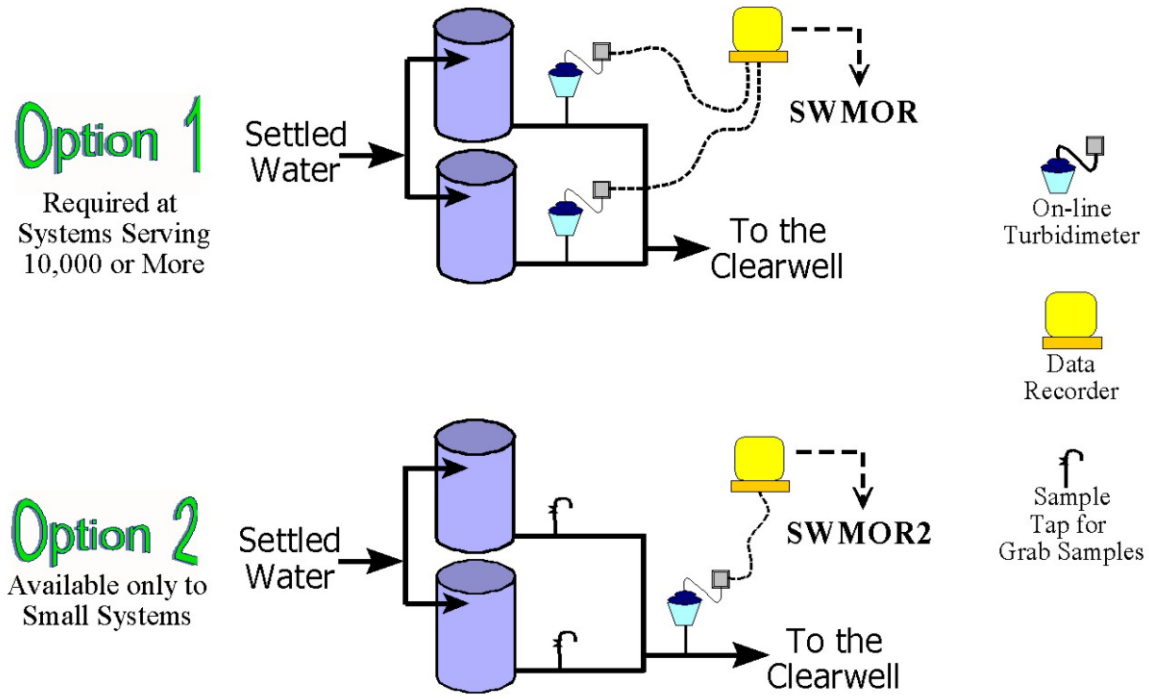

Figure B-2. Schematic showing IFE-monitoring requirements for plants with only two conventional filters.

Plants that use cartridge filters may have even more IFE monitoring options (Figure B-3). The information in Figure B-3 is based on the monitoring options that existed at the time that this document was published. However, some of these options may be restricted or eliminated as we revise our implementation policies and regulatory requirements in response to new federal rules or guidance from the EPA. To keep aware of the latest developments, you should periodically check the EPA's drinking-water Web pages:

water.epa.gov/drink/index.cfm

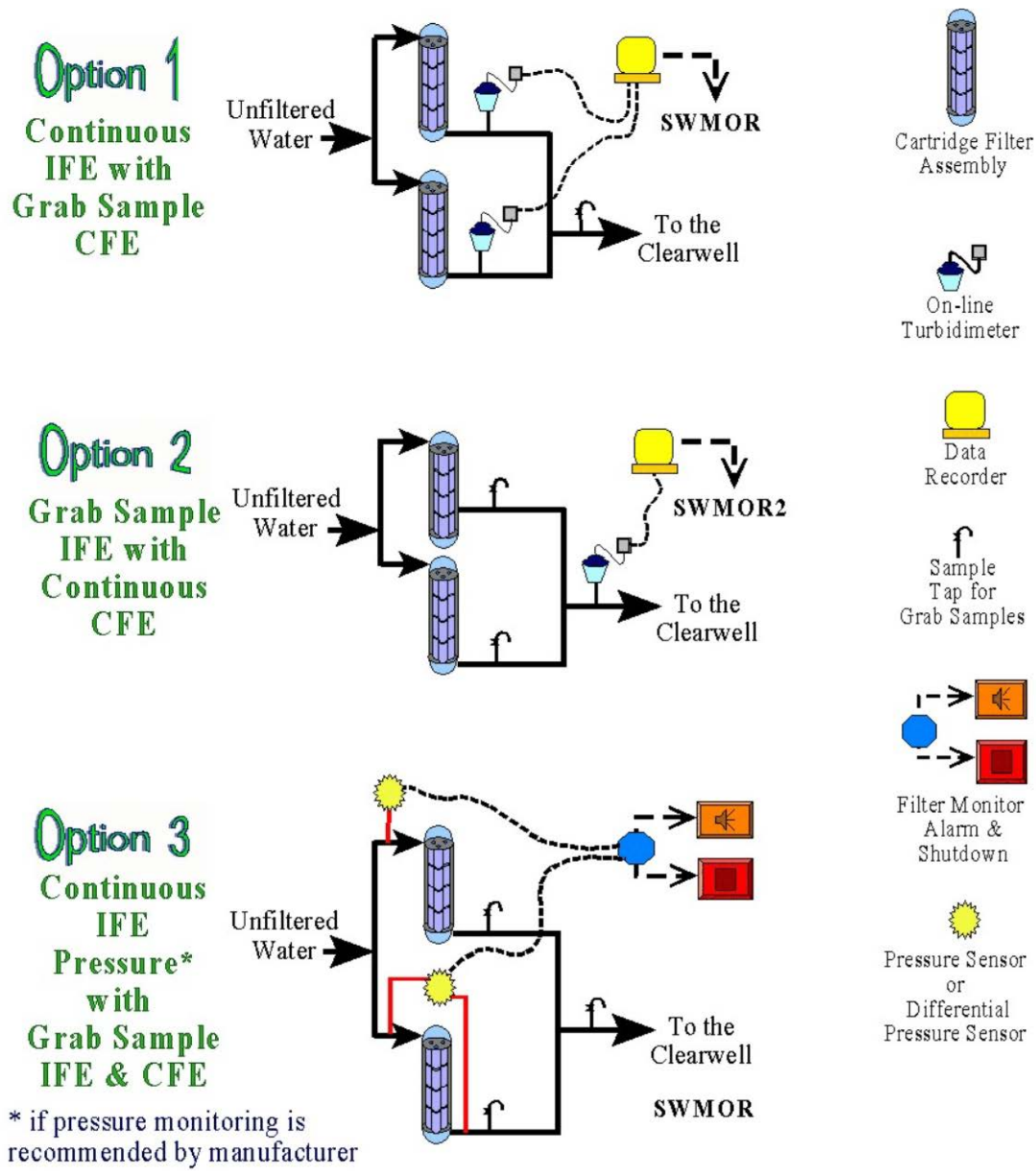

Figure B-3. Schematic showing IFE-monitoring requirements for plants with cartridge filters.

Plants that use membrane filters must continuously monitor the turbidity level or particle count in the water produced by each rack, or bank, of membrane modules or units. Figure B-4 shows the IFE monitoring requirements for a plant using 10 membrane units that are configured in two racks of five modules each.

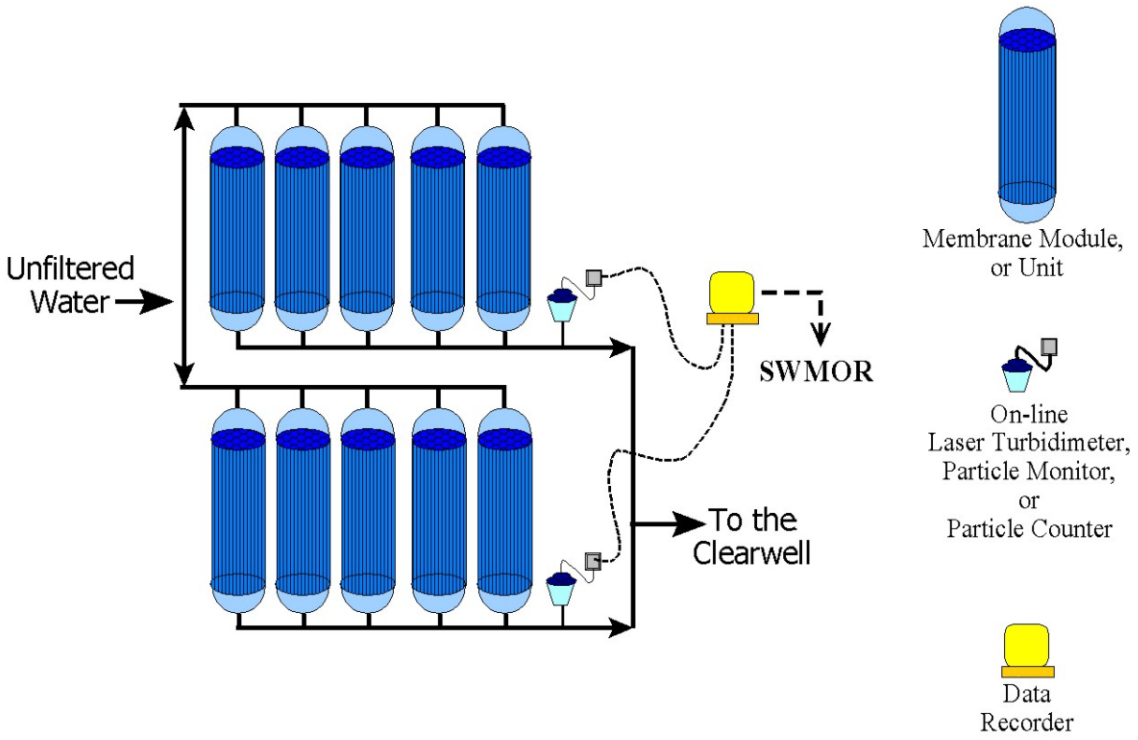

Figure B-4. Schematic showing IFE-monitoring requirements for a plant with membrane filters.

Plants that use membranes may use one of three types of devices to continuously monitor membrane performance. These devices include a laser turbidimeter such as the Hach FilterTrac 660, a particle monitor, or a particle counter. Since membrane units are often backwashed many times each day, we normally require membrane plants to collect and record performance data at least once every 5 minutes instead of once every 15 minutes. The monitoring and reporting requirements for membrane plants are likely to change dramatically over the next few years in response to federal mandates and technological developments. To keep aware of the latest developments, you should periodically check this TCEQ Web page:

www.tceq.texas.gov/drinkingwater/swmor

You may find it particularly useful to visit the Web page that contains our Public Drinking Water Program staff guidance statements:

www.tceq.texas.gov/goto/dw-staff

Special Filter Studies

If your filters are equipped with IFE turbidimeters, we require you to investigate and report the cause of any IFE turbidity readings that are above 1.0 NTU. If your system serves at least 10,000 people, we also require you to investigate any instance when an IFE turbidity level is greater than 0.5 NTU exactly 4 hours after the filter has been placed into, or returned to, service.

The specific type of investigation you must conduct depends on the severity and frequency of the malfunction. Some examples follow.

- Each time that two consecutive 15-minute IFE turbidity readings exceed 1.0 NTU, you must either (1) identify the cause of the elevated readings, or (2) profile the filter. Whichever of these two investigations you perform, send us the results.
- If a specific filter exceeds 1.0 NTU on three separate occasions during any consecutive three-month period, you must also conduct a filter assessment. Again, you must supply us with the results of the assessment.
- If a single filter or any combination of filters ever produces an IFE turbidity level above 2.0 NTU during two consecutive months, you must arrange for a third-party investigator to conduct a comprehensive performance evaluation at your plant. You must provide us with the CPE results and a corrective action plan to address any performance-limiting factor that the evaluator identified.

We realize that these are very complex rules, but they are very important to prevention of waterborne disease. Consequently, we developed the series of special report forms that are described in Chapters 4, 5, and 6.

If your system (1) serves fewer than 10,000 people, (2) has no more than two filters, and (3) continuously monitors blended water entering the clearwell instead of the water leaving each filter, you must conduct special studies based on your CFE turbidity readings instead of the daily grab samples that you collect from each filter.

Combined Filter Effluent, or Treated Water

Combined filter effluent is the water that is produced by the plant after it has combined all the water produced by individual filters. We have traditionally referred to your plant's CFE as its "treated water." However, at some plants, additional treatment steps like pH adjustment, rechlorination, or fluoride addition occur after the point where the filtered water is combined. Even if your plant does not perform post-filtration treatment, the turbidity levels of the CFE and treated water may differ because the sediment that tends to accumulate in a clearwell may occasionally end up raising the turbidity level in the treated water.

We strongly encourage you to install a CFE sampling point for the reasons described above. This sampling point *must* be located after all of the filtered water from individual filters has been combined and *should* be located upstream of any post-filtration treatment process. However, if your plant design limits your ability to install or use that sampling point, we will allow you to monitor the level of treated-water turbidity in lieu of monitoring CFE turbidity.

Our rules currently require you to produce water with a CFE turbidity level of 0.3 NTU or lower in at least 95% of the tests you conduct each month, and limits the turbidity level for each individual CFE sample to 1.0 NTU. If your CFE readings exceed these levels, you will be required to notify your customers that you have failed to produce water of acceptable quality.

As we stated earlier, lower turbidity levels generally indicate better plant performance, higher-quality drinking water, and lower risk for waterborne diseases. Consequently, the TCEQ strongly encourages public water systems to keep turbidity as low as possible. A properly designed, operated, and maintained treatment plant should be able to produce water with a turbidity level consistently below 0.1 NTU.

Disinfection: The Second Step

A typical surface water treatment plant cannot possibly remove all of the disease-causing organisms that might be present in the raw water. Therefore, the treatment must include disinfection to kill or inactivate the pathogens that are not removed.

The effectiveness of disinfection depends on several factors:

1. **The type of disinfectant that the plant uses.** Some disinfectants are stronger than others. The stronger disinfectants will typically require a lower dose to achieve the desired level of inactivation. However, some of the strongest disinfectants, like ozone, do not produce long-lasting residuals.
2. **The concentration of the disinfectant.** Whichever disinfectant you use at your plant, raising the disinfectant residual generally improves the effectiveness of the disinfection process. However, while increasing the residual increases the number of organisms that you kill, it can also increase your disinfection by-product levels.
3. **The amount of time that the disinfectant is in contact with the water**. Obviously, the longer that you expose a pathogen to a disinfectant, the more likely it is that you will kill it.
4. **The pH of the water.** Some disinfectants are affected by the pH of the water. Chlorine is particularly affected because it changes from its hypochlorous acid form to its less effective hypochlorite ion form as the pH rises. Chlorine dioxide, on the other hand, is less effective at low pH levels than above pH 7.5.
5. **The temperature of the water.** Disinfectants are less effective at lower than at higher temperatures because chemical reactions occur more slowly at lower temperatures, and because many pathogens tend to become inactive when the temperature drops. This is generally not a problem unless your water temperature drops below 5°C (41°F).

Some of these factors, like residual concentration and pH, can be controlled to a great extent by the operator. Other factors, like the type of disinfectant and the contact time, are limited by the design of the plant and water demands.

CT and $CT_{required}$

The type of disinfectant that a plant uses and the pH and temperature of its water tend to remain relatively constant on a day-to-day basis. Consequently, we tend to evaluate the disinfection process using the concentration and time factors. Often, we describe the relationship between the disinfectant concentration and time using the term “CT” and the following equation.

$$CT = \text{Concentration of disinfectant (mg/L)} \times \text{Time (minutes)} \qquad \text{(Equation B-1)}$$

Basically, the less time you have to disinfect, the more disinfectant you have to apply to maintain the same CT value.

Just as turbidity levels and particle counts are used to evaluate the effectiveness of physical removal processes, *CT values* are used to assess the performance of chemical disinfection processes. The actual CT value for a disinfection zone is obtained by multiplying the actual disinfectant concentration, "C", by the time, "T", that the disinfectant was in contact with the water. The actual CT value (that is, CT_{actual}) is then compared to the CT required to achieve the desired level of pathogen inactivation (that is, $CT_{required}$). The log inactivation achieved during the disinfection process can be calculated as shown below:

$$\text{Log inactivation achieved} = \frac{\text{Actual CT}}{\text{CT required for N-logs of inactivation}} \times \text{N-logs} \qquad \text{(Equation B-2)}$$

Although the overall CT concept may seem simple and straightforward, applying the approach is complicated because:

- The actual contact time available at your plant is affected by the amount of short-circuiting that occurs within your contact basins.
- The required CT varies based on:
  - the pathogen being inactivated,
  - the number of log inactivations, or N-logs, that you are required to achieve,
  - the actual plant operating conditions, that is, the pH and temperature of the water, and
  - the type and concentration of the disinfectant.
- Your plant may use several disinfectant-application points and may even adjust the pH level during the process.

Because applying this CT approach can be so difficult and time-consuming, we have incorporated a small Visual Basic computer program in the SWMOR spreadsheet. This program uses several complex mathematical equations to calculate CT_{actual} based on the information you enter on your report.

Distribution-System Residual: The Final Step

To ensure that the treated drinking water stays safe to drink, you must make sure that it does not become contaminated before reaching the customer's glass. To achieve this goal, water systems keep pathogens out of the water supply, maintain adequate water pressure throughout the system, prevent cross-connections to untreated water supplies, and ensure that there is enough disinfectant everywhere in the distribution system. This disinfectant concentration in the distribution system is often referred to as the *distribution residual*.

B.2 CT STUDIES AND THE CT-STUDY-APPROVAL LETTER

The CT study is an evaluation of your plant's disinfection process. Its purposes are to:

- identify the number of disinfection zones at your plant
- determine the effective contact time, or T_{10}, in each zone
- define the minimum level of disinfection that must be attained at the plant

Every treatment plant that uses surface water or groundwater that is under the direct influence of surface water must have a current, TCEQ-approved CT study. You must submit changes to your CT study if you make a significant change to your disinfection practice. You may not make a change to your disinfection process without our prior written approval. Significant changes to disinfection practice include any of the following:

- changing the type of disinfectant
- moving the point of disinfectant addition
- changing physical facilities in such a way that more or less effective contact time is used
- changing the approved capacity of the plant
- any other change that we consider significant

Every plant is required to have a CT-study-approval letter on file to document that we have reviewed and approved the plant's CT study and its current disinfection process. See Appendix A for a sample CT letter like the one for your plant.

In order to understand the importance of the CT-study-approval letter, you need to understand how we evaluate the disinfection process at your plant. The critical factors we evaluate are:

- the number of disinfection zones and treatment trains at the plant
- the maximum flow rate though each zone
- the baffling characteristics of each disinfectant contact unit
- the T_{10} time in each zone

Disinfection Zones and Treatment Trains

A *disinfection zone* is defined as that section of the plant starting at a disinfectant injection or monitoring point, and ending at the subsequent disinfectant injection or monitoring point. A disinfection zone contains one or more treatment units and the associated piping. Every disinfectant-injection point is the start of a new disinfection zone, even if it is not always used. Every injection point must have an associated monitoring point. However, a plant may have only one disinfectant point and choose to monitor at more than one point, creating multiple disinfection zones.

The starting point for analyzing your disinfection process is to identify the unit processes and the disinfection injection and monitoring points. It is usually helpful to prepare a sketch or schematic of the plant. A drawing, like the ones shown in Figures B-5 though B-7, may help in defining disinfection zones.

Figure B-5 shows a small plant with pre- and post-disinfectant application points for chlorine. Even at this small plant, the operator has some choices regarding disinfection. For example:

- The operator can choose to use a single chlorine-monitoring point for the pre-disinfection application point. In this case, the upper schematic shows that there will be a single pre-disinfection zone that:
  - starts at the chlorine-injection point located in the pipe between the raw water pumps and the sedimentation basin and
  - ends at the monitoring point after the filters.
- The operator can choose to use two or more monitoring points for the pre-disinfectant. The lower schematic shows that this monitoring strategy creates two pre-disinfection zones instead of one.

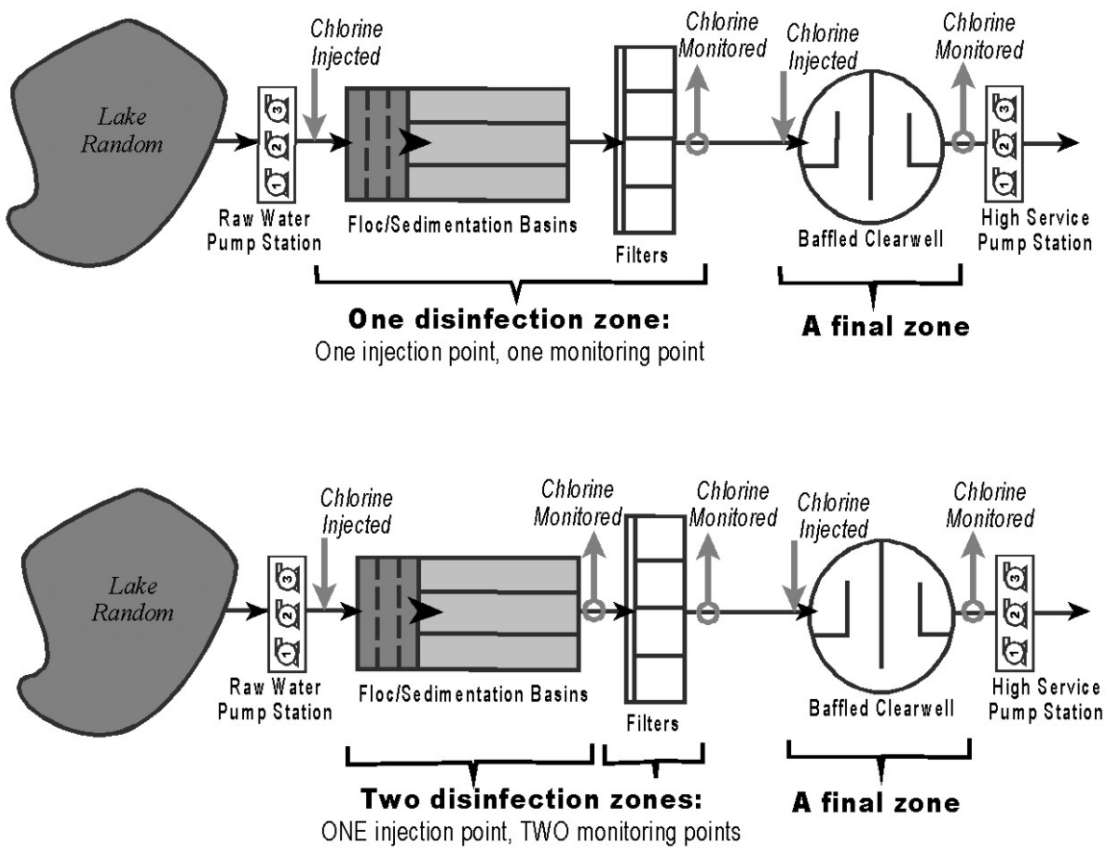

Figure B-5. Plant schematic of an SWTP with one chlorine-injection point.

Figure B-6 contains the schematic for a plant that has multiple chlorine injection points and uses several different types of disinfectants. The figure shows how the disinfection zones might be defined in this complex design.

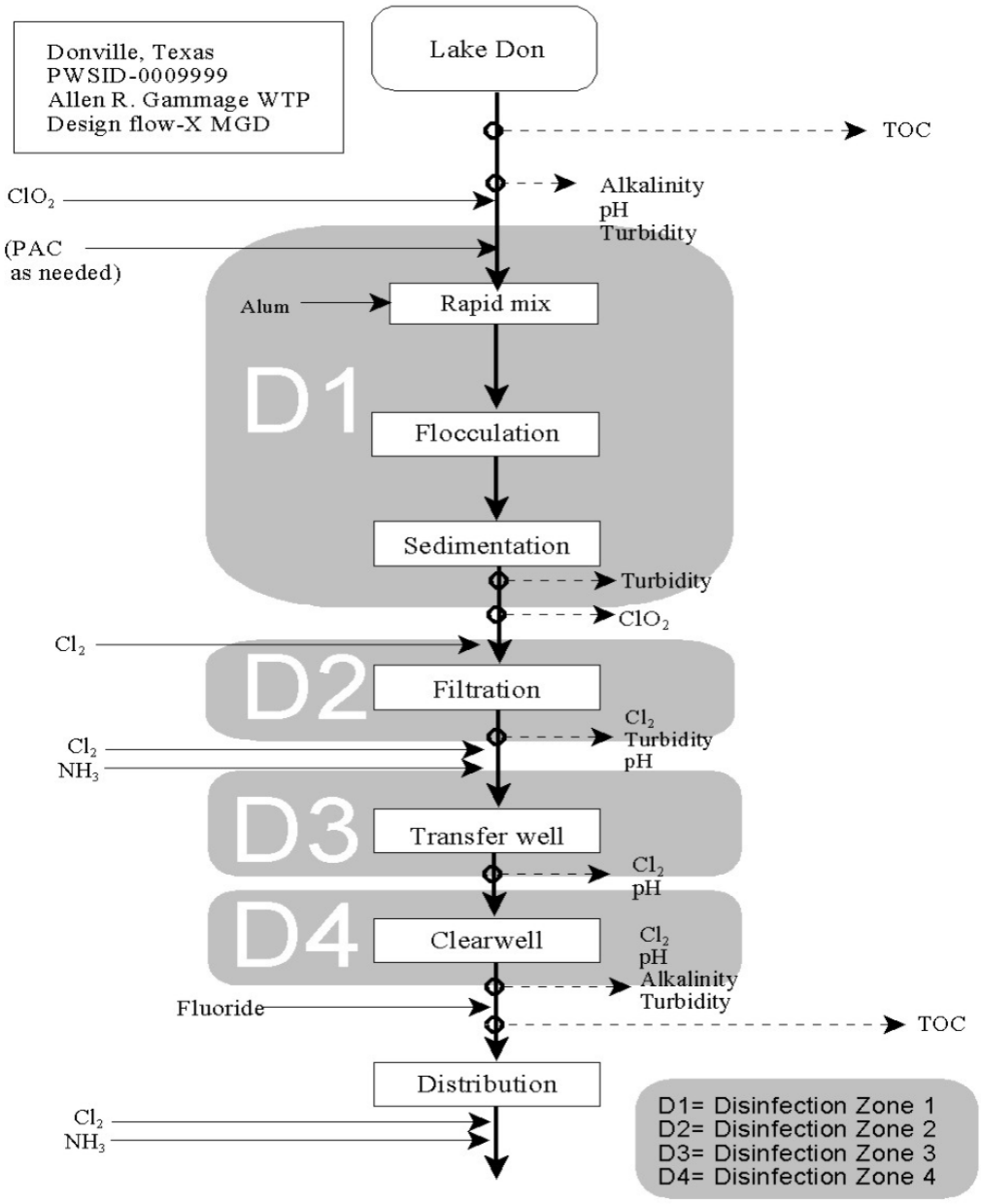

Figure B-6. Schematic of an SWTP with multiple disinfectant-application points.

Plants with multiple treatment trains may have parallel disinfection zones. The analysis of multiple treatment trains is not that much harder than the one for a single treatment train **if** the treatment trains are identical, they share a common disinfectant application point, and flow is split equally. If the treatment trains are very different, it may be more appropriate to treat the treatment trains as separate plants. Figure B-7 shows the schematics of two treatment plants. Figure B-7 shows a plant where it would be appropriate to define two trains. The complexity of the plant in the following schematic suggests that it might be more appropriate to redefine the facility as two plants instead of two trains.

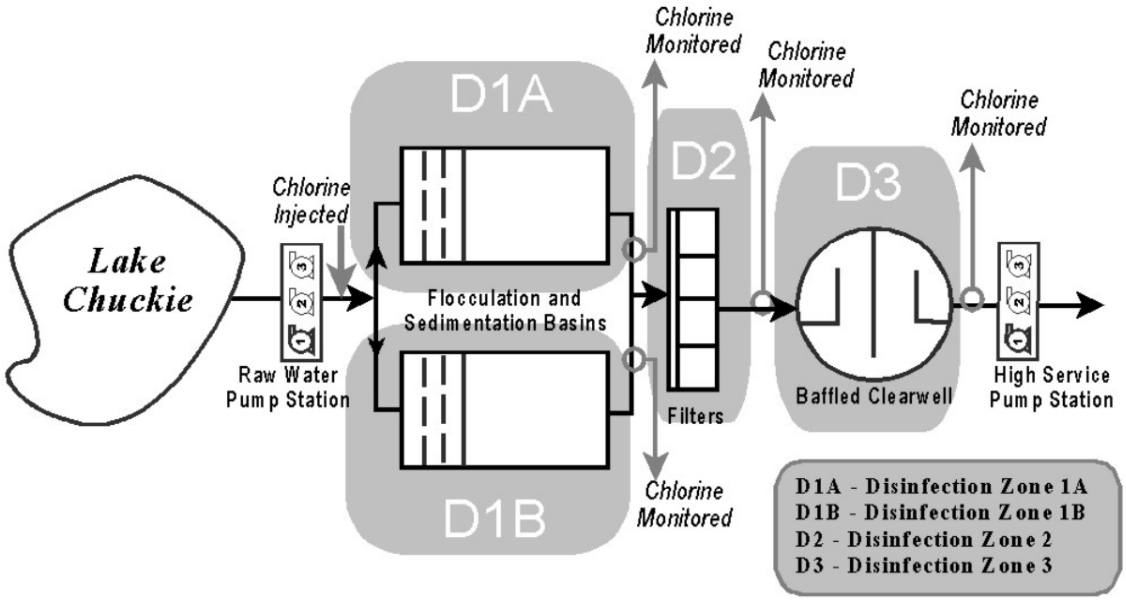

One SWTP with two parallel treatment trains in zone D1

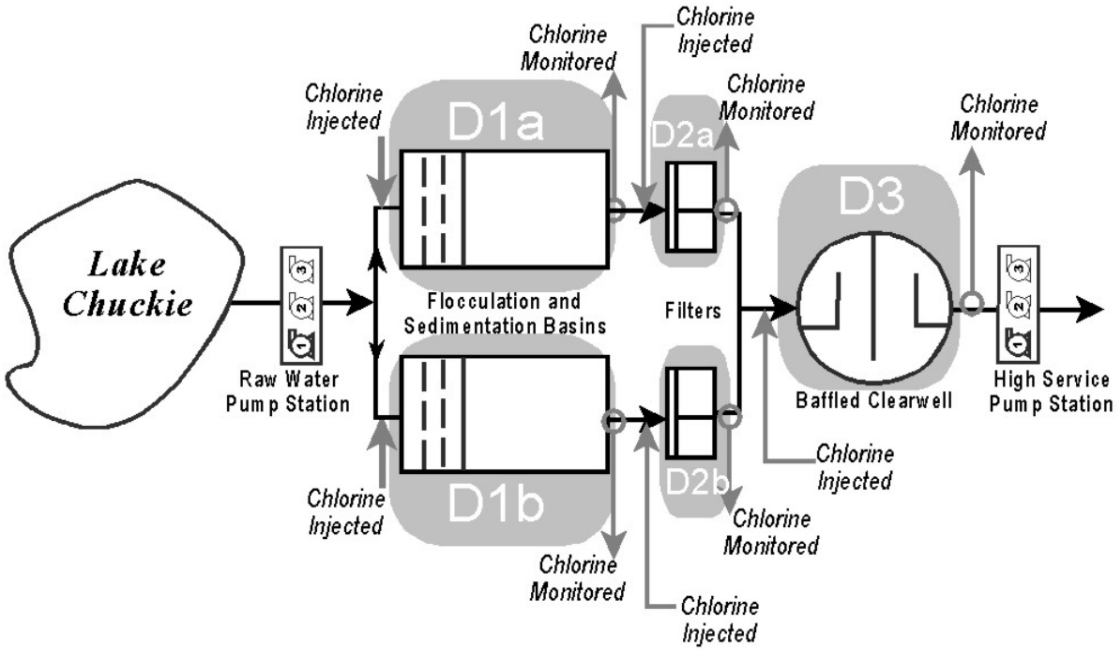

Two SWTPs with a common zone D3

Figure B-7. Schematic of an SWTP with multiple treatment trains.

Flow Rate and Effective Contact Time, T_{10}

The theoretical contact time in a basin is easily calculated by dividing the actual volume of the basin by the flow rate through it. When the flow rate increases, the time the water spends in the plant decreases. Therefore, we try to use the maximum flow rate through the disinfection zone when evaluating your disinfection process. If possible, we use your historical operational data to determine the peak hourly flow rate through the zone. If this information is not available, we may base the peak flow rate on the maximum raw water pump capacity or some other design feature of the plant.

IMPORTANT
The flow rate we used in our CT approval letter may be greater than the rated capacity of your plant. However, unless the letter specifically grants an exception to one or more of our minimum design requirements, the letter does not authorize you to operate above your regulatory design capacity. The only purpose the letter serves is to document that we have approved the disinfection protocol that you are using at your plant—even if you violate our other design criteria.

The theoretical contact time is dependent only on the volume of the basin and the flow rate of the water. However, the actual contact time depends on these two factors as well as on the hydraulic characteristics of the basin, that is, how much **short-circuiting** occurs within the basin. Short-circuiting occurs when individual drops of water do not remain in a basin for the same amount of time. Short-circuiting exists to a significant degree in basins that have inadequate baffling and in basins where mixing occurs.

Baffling Factors and Effective Contact Time, T_{10}

The effective contact time (T_{10}) in each disinfection zone is a function of the hydraulics of the basin. The flow through a pipe or a well-baffled basin is very different from the flow through a storage tank or a poorly baffled basin.

Consider the two sets of basins shown in Figure B-8. These two basins have the same shape and size and the only difference between them is that one is well baffled and the other is poorly baffled. Assume that flow rate of the water through each basin is the same and that a food-grade dye is injected at each of the inlets for one minute. In the well-baffled basin, the dyed water moves though the basin as though the water was a solid plug, that is, the dyed water that enters the basin first will leave the basin first. In the poorly-baffled basin, some of the dyed water moves through the basin faster than the rest of the water, that is, some of the dyed water that entered the basin last may exit before some of the water that entered first. As Figure B-8 shows, in an extreme case, much of the dyed water in a poorly-baffled basin will be discharged before any of the dyed water in the well-baffled basin even reaches the outlet.

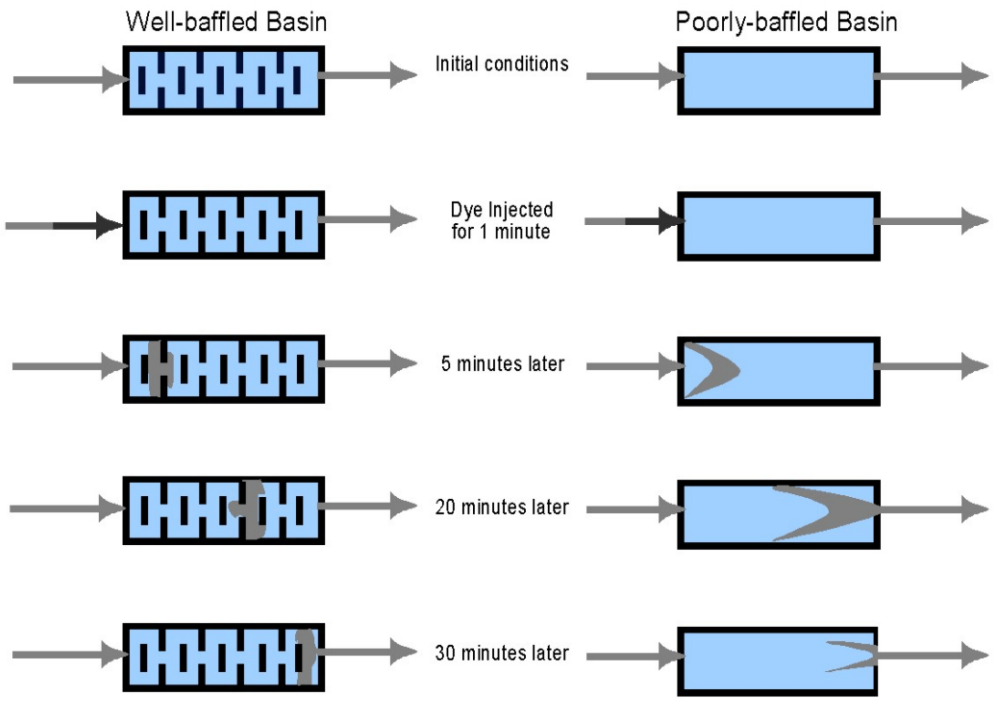

Figure B-8. Comparison of the flow patterns in well-baffled and poorly baffled basins.

Now consider the two treatment units shown in Figure B-9. The longest path a particle can take through a pipeline is not that different from the shortest path. It is different for an unbaffled mixing tank. In the case of a tank, one particle may flow through directly from the influent to the effluent. This short-circuiting particle will be in contact with the disinfectant for a relatively short time.

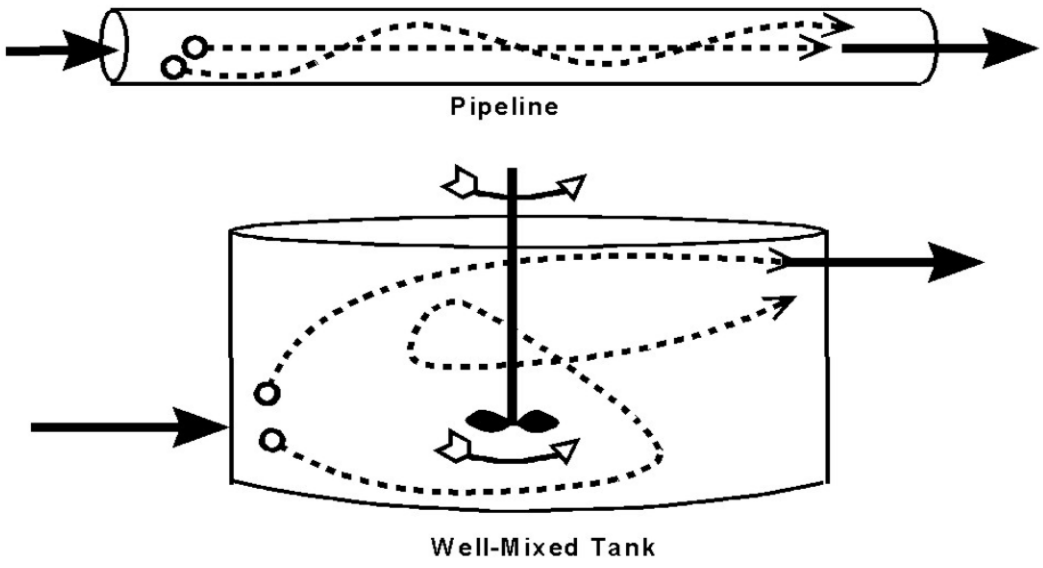

Figure B-9. Comparison of the flow patterns in a pipe and a well-mixed tank.

Although basins with mixers and poor baffling exhibit high levels of short-circuiting, some short-circuiting exists in all basins. The question becomes "How much short-circuiting do we allow before we determine the actual contact time?" To answer this question, a number of research studies were conducted on pilot plants and at full-scale facilities. Based on the results of these studies and a theoretical analysis of the problem, the EPA determined that only 10% short-circuiting should be allowed when determining the actual contact time.

Under those conditions, 10% of the water would receive slightly less disinfection than desired but the rest of the water would receive more than enough disinfection to meet the objectives. Since the actual contact time is based on a 10% short-circuiting allowance, the term T_{10} *time* is used to describe the actual disinfectant contact time at your full-scale plants. It should be noted that using the T_{10} time for CT calculations is a very conservative approach: in many cases 50% of the water actually receives twice the required level of disinfection, and 10% of the water might receive as much as four times more disinfection than required.

The next question becomes "How do we determine the T_{10} time for a given operating condition?" The best way to determine the T_{10} time in a disinfectant contact chamber is to run several tracer tests at different flow rates. During each of the tracer tests, you actually introduce a tracer, or marker, compound (such as a dye, fluoride, or other soluble material) into the water as it enters the contactor. You then run a series of tests to determine how long it takes for 10% of this tracer to reach the end of the basin. By running the tests at several different flow rates, you can determine if the hydraulic properties of the basin change as the flow rate changes.

The differences in hydraulics are described by the *baffling factor* (BF)—defined as the ratio of the effective contact time (T_{10}) to the theoretical detention time (TDT). The results of the tracer studies are used to determine a baffling factor that characterizes the hydraulic short-circuiting within the treatment unit. The relationship between the baffling factor, T_{10}, and the theoretical contact time can be expressed using the following equation:

$$Baffling\ Factor = \frac{T_{10}}{T_{10,\ Theoretical}} \qquad \text{(Equation B-3)}$$

$$= T_{10} \times \frac{Flow\ rate\ during\ the\ tracer\ test}{Volume\ during\ the\ tracer\ test}$$

The baffling factor is important because it is then used to calculate the T_{10} times at flow rates other than the ones used during the tracer study. The T_{10} can be calculated for any given operating condition using the following equation:

$$T_{10\ Current} = T_{10,\ Theoretical,\ Current} \times Baffling\ Factor$$

$$= \frac{Current\ Volume}{Current\ Flow\ Rate} \times Baffling\ Factor \qquad \text{(Equation B-4)}$$

You are probably aware that there are no spaces on pages 4 and 5 of the SWMOR for you to enter the volume and baffling factor for each disinfection zone. This is because we made two additional assumptions in order to significantly reduce the amount of data that you need to collect each day.

- First, we use a minimum water level when calculating the T_{10} for the treatment unit. By using a minimum volume, we ensure that the contact time under all operating conditions will be greater than the value that we are approving—and more time means more kill.
- Second, we assume that the water level never exceeds the water level we used when we approve the CT study. This assumption allows us to conclude that the flow rate into the unit is equal to the flow rate out of the unit. (If that were not true, the water level would continue to fall or start to rise.) The assumption allows us to base the detention time in the clearwell (and other variable-level contact basins) on the rate that water is being treated rather than the peak flow rate of the service or transfer pumps. While this assumption may underestimate the contact time in tanks where the water level falls rapidly (such as at plants with very small clearwells or very large service pumps), it gives a conservative estimate for most of the plants in Texas.

Although these assumptions are a minor inconvenience for systems that closely monitor the water level in their clearwell and storage tanks, they significantly simplify the SWMOR for the majority of plants because it is no longer necessary to determine the water volume in each treatment unit each time you collect a CT data set. By making these assumptions, we can combine Equations B-3 and B-4 to obtain:

$$T_{10\ Current} = T_{10,\ Theoretical,\ Current} \times Baffling\ Factor$$

$$= \frac{Current\ Volume}{Current\ Flow\ Rate} \times \frac{CT\ Study\ Flow\ Rate}{CT\ Study\ Volume} \times T_{10,\ CT\ Study} \qquad \text{(Equation B-5a)}$$

$$= \frac{Current\ Volume}{CT\ Study\ Volume} \times \frac{CT\ Study\ Flow\ Rate}{Current\ Flow\ Rate} \times T_{10,\ CT\ Study}$$

Since we have assumed that the Current Volume and the CT Study Volume are the same, the first term cancels out and you can calculate the actual T_{10} for any operational flow rate using Equation B-5b:

$$T_{10\ Current} = \frac{CT\ Study\ Flow\ Rate}{Current\ Flow\ Rate} \times T_{10\ CT\ Study} \qquad \text{(Equation B-5b)}$$

Although tracer tests are the best way to determine the actual contact time (T_{10}) in a basin, tracer studies are time-consuming, expensive, and difficult to conduct. Therefore, you or your engineer may have chosen to estimate the baffling factor (that is, use a theoretical baffling factor) for your basins rather than conducting an actual tracer study to determine an empirical (that is, a data-based) value.

The theoretical baffling factors that we use when reviewing CT studies are based on the baffling characteristics (that is, the design) of a basin and use data obtained from many research studies. The theoretical baffling factors that we approve are relatively conservative and may actually underestimate the T_{10} in a basin. Consequently, if your plant is using a theoretical baffling factor, you are probably providing slightly more disinfection than you think.

Table B-2. Theoretical baffling factors.

Condition	Baffling Factor	Baffling Description	Typical Unit Process
Unbaffled	0.1	None; agitated basin; high inlet and outlet flow velocities; variable water level	Clearwell or storage tank, without baffling; with no perforated inlet or outlet and with inlet and outlet submerged
Poor	0.3	Single or multiple unbaffled inlets or outlets; no intrabasin baffles	Many conventional sedimentation basins. Storage tanks with two or three baffles
Average	0.5	Baffled inlet or outlet with some intrabasin baffling	Some (few) sedimentation basins. Highly-baffled storage tanks
Superior	0.7	Perforated inlet baffle, serpentine or perforated intrabasin baffles, and outlet weir	Filters; contact tanks with serpentine baffling
Plug Flow	1	Pipeline flow	Sections of pipe 10 times longer than their diameters

A system must estimate the theoretical baffling factors for each piece of the plant in which disinfection occurs. For instance, in a length of pipe, there is plug flow. A step-dose tracer test in a pipe would show that all the material you put in comes out at the theoretical hydraulic detention time of the pipe. Therefore, the correct theoretical baffling factor to use for a pipe is 1.0. On the other hand, in a tank like an unbaffled clearwell, some of the tracer material in a step-dose test would come out almost

immediately. Because of this short-circuiting, the appropriate baffling factor for an unbaffled clearwell is 0.10.

Disinfection Zones and Effective Contact Time, T_{10}

The total T_{10} for a disinfection zone is the sum of the T_{10}s for the individual units in the zone. These individual units can include several sections of pipe, a tank or basin, or any other treatment unit that allows time for the disinfectant to work. Equation B-6 summarizes this relationship.

$$T_{10,\,Zone} = \sum_{Unit\ 1}^{Unit\ n} T_{10,\,Unit} \qquad \text{(Equation B-6)}$$

$$= T_{10,Unit\ 1} + T_{10,Unit\ 2} + \ldots + T_{10,Unit\ n}$$

Example B-1 demonstrates how you should use your CT-study-approval letter to determine T_{10} for each of your disinfection zones.

Example B-1: Determining the Total T_{10} for a Disinfection Zone

The following is an excerpt from the T_{10} Table contained in the CT-approval letter shown in Appendix A. (Footnotes have been omitted.)

Table A-1. Approved T_{10} Table for Aguaville WSC's Schwartz Surface Water Treatment Plant.

Disinfection Zone	Treatment Unit	Volume (gallons)	Flow Rate	Baffling Factor	T_{10}, Unit (min)	T_{10}, Zone (min)
D1	Raw-water line	2,800	2,000 gpm (2.880 MGD)	1.0	1.4	46.7
	Splitter box	1,800	2,000 gpm	0.1	0.1	
	Clarifiers	150,700	1,000 gpm	0.3	45.2	

From this portion of the table, you can see that:

- The T_{10} times for the raw-water line, splitter box, and clarifiers are 1.4 minutes, 0.1 minutes, and 45.2 minutes, respectively.
- The total T_{10} for Zone D1 is 1.4 + 0.1 + 45.2 = 46.7 minutes.

B.3 Submitting a Revised CT Study to the TCEQ

As noted in Section B.2, you may not make any significant change to your disinfection process without our prior written approval. In order to get your proposed change approved, you must conduct a CT study to evaluate the impact of the proposed change. The principal purpose of the CT study is to develop the new T_{10} for each zone. You may determine the T_{10} either by running a tracer study or by using theoretical baffling factors. When you send us the data for our review, you must supply all of the following information:

- a plant schematic showing disinfectant injection and monitoring points
- the dimensions (the length, width, depth, and diameter) and volume of each basin, tank, and large pipe in the disinfection zone

- the peak hourly flow rate through each disinfection zone and a justification for using that specific flow rate to determine T_{10}
- all of the empirical tracer study information if you ran a tracer test
- the baffling factor that you are proposing for each unit and the justification for using that specific baffling factor to determine T_{10}
- the T_{10} for each treatment unit and the total T_{10} for each disinfection zone

If you have no more than 10 disinfection zones, you can use the CT Study template to prepare your revised CT study. The CT Study template is an Excel spreadsheet that can be customized to fit your plant. This template has a place for you to enter all of the information mentioned above. We used the template to prepare the CT study shown in Appendix A. The appendix also contains a copy of the printout from the template for this imaginary plant.

You can download a copy of the template and its instruction manual from the TCEQ website at:

www.tceq.texas.gov/drinkingwater/swmor

or you can call us at 512-239-4691 to request a copy on a CD.

This template can be completed by the public water system staff—a professional engineer is not required. When the template is completed, copy the completed spreadsheet to a CD and just submit it with a cover letter stating the reason for the CT study revision request and the contact person who can answer any questions we may have. The template can be submitted to us at:

Technical Review and Oversight Team, MC 159
Water Supply Division
Attention: CT Study Coordinator
TCEQ
PO Box 13087
Austin, TX 78711-3087

Alternatively, you may submit documents to our physical address at:

Technical Review and Oversight Team, Building F
Water Supply Division
Attention: CT Study Coordinator
TCEQ
12100 Park 35 Circle
Austin, TX 78753

You may also send us the completed template to a special e-mail account that we have established for this purpose. If you submit the CT study electronically, please be sure to include your name, title, and telephone number in the e-mail and to attach the completed template before the e-mail is sent. The e-mail address that you should use is <CTstudy@tceq.texas.gov>.