APPENDIXES

Appendix A: Example of a CT-Study-Approval Letter

Appendix B: Multiple-Barrier Treatment and CT Studies

Appendix C: Inactivation Calculations

Appendix D: CT Tables

Appendix E: Example of a Completed SWMOR

Appendix F: Example of a Completed Filter-Profile Report

Appendix G: Example of a Completed Filter-Assessment Report

Appendix H: Example of a Standard Operating Procedure for Conducting a Filter Inspection

Appendix I: Example of a Completed CPE-Request Form

Appendix A: EXAMPLE OF A CT-STUDY-APPROVAL LETTER

March 23, 2010

Mr. I.M. Smart
Grenn and Barrett Consultants
1500 Downtown Boulevard
Big City, Texas 12345-6789

Subject: Public Drinking Water Supply
Approval of Revised CT Study for Schwartz Treatment Plant
Aguaville WSC—PWS ID No. 9876543
Rural County, Texas

Dear Mr. Smart:

We have completed the review of the CT study template and nine engineering drawings that were submitted with your letter of January 18, 2004. The materials describe proposed changes to the disinfection protocol at the Aguaville Water Supply Corporation's Schwartz Surface Water Treatment Plant. Revisions to the CT study were needed because the WSC recently installed baffle walls in each of its clearwells and has received permission to begin using chloramines. Based on our review, we are approving the updated CT study with a few minor revisions to incorporate the additional information we received from Allen Gammage, the Chief Operator, during our telephone call on March 5, 2004, and the changes you and I discussed during our telephone call on March 13, 2004. The information in this letter will replace, not supplement, the CT study approved in our letter of February 25, 1993.

The Schwartz Surface Water Treatment Plant is supplied by a raw-water pump station located near the Lake Schwartz Dam. The station consists of two 1000-gpm and one 1,500-gpm raw-water pumps which discharge to a 24-inch raw-water transmission line that supplies the SWTP. The 2,000-gpm SWTP is located about one-half mile from the lake and consists of an in-line rapid mix, a splitter box, a pair of 0.150 MG solids-contact, slurry-recirculation clarifiers, a filter splitter box and channel, six mixed-media gravity filters, a head control box, a filtered-water transfer pump station containing three 1,000-gpm transfer pumps, three 0.50-MG baffled clearwells that operate in parallel, and a high-service pump station.

The proposed disinfection protocol uses a standby chlorine application point located upstream of the in-line rapid mix, a primary chlorine injection point at the inlet to the filter splitter box, and a booster chlorination point at the high service pump station. There is a standby injection point for liquid ammonium sulfate (LAS) located just downstream of the rapid mix and a primary injection point at the header which supplies the three clearwells.

A disinfection zone is a segment of the treatment process that begins at a disinfectant application point and ends at the subsequent disinfectant application or residual sampling point. Each disinfectant application point, regardless of the frequency of use, represents the beginning of a separate disinfection zone. Based on the proposed disinfection protocol, three disinfection zones are defined for the plant. The first disinfection zone (D1) begins at the standby prechlorination point at the rapid mix. The second

disinfection zone (D2) begins at the filter influent and ends at the ammonia application point downstream of the filters. The last disinfection zone (D3) includes the clearwell.

CT calculations are used to evaluate the disinfection process. Based on the data provided in the CT study, T_{10} values were developed for individual components of the treatment process. These values are summarized in Table A-1.

Table A-1. Approved T_{10} table for Aguaville WSC's Schwartz Surface Water Treatment Plant.

Disinfection Zone	Treatment Unit	Volume (gallons)	Flow Rate (1)	Baffling Factor	T_{10}, Unit (min)	T_{10}, Zone (min)
D1	Raw-water line	2,800 (2)	2,000 gpm (2.880 MGD)	1.0 (3)	1.4	46.7
	Splitter box	1,800 (4)	2,000 gpm	0.1 (5)	0.1	
	Clarifiers (2)	150,700 (6)	1,000 gpm	0.3 (7)	45.2	
D2	Filters (6)	4,300 (8)	333 gpm	0.7 (9)	9.0	11.7
	Head Control Box	3,250 (10)	2,000 gpm	0.1 (5)	0.5	
	Piping	4,400 (11)	2,000 gpm	1.0 (3)	2.2	
D3	Clearwells (3)	211,500 (12)	667 gpm	0.7 (13)	222.1	222.1

Notes:

1. The flow rates used in this CT study are based on the cumulative capacity of the raw water pumps with the largest unit out of service and assume that flow is equally distributed to treatment units operating in parallel.
2. Based on 120 feet of 24-inch pipe from the rapid mix to the splitter box.
3. Assumes that "plug flow" hydraulic conditions exist in the pipeline.
4. Based on a basin with dimensions of 6.0 feet by 6.0 feet and a 6.0-foot side water depth.
5. In the absence of empirical data, assumes "unbaffled" hydraulic conditions exist in basins with mixers and in unbaffled basins that can have a high level of short-circuiting.
6. Based on the volume of a single solids contact clarifier with a 45.0-foot diameter, a 12.0-foot side water depth, and a center water depth of 14.0 feet.
7. Assumes that "poor" hydraulic conditions exist in a solids-contact, slurry-recirculation clarifier.
8. Based on the volume of a single filter which has a media bed with dimensions of 10.0 feet by 8.0 feet, a total depth of 3.67 feet, and an underdrain that is 1.0 feet deep. Assumes that the average porosity of the filter bed and gravel support system is 50%. Also assumes that a minimum water depth of 4.33 feet is maintained above the surface of the media by the head control box.
9. Assumes that "superior" hydraulic conditions exist in the filter and underdrain.
10. Based on a head control box with dimensions of 6.0 feet by 12.0 feet and a side water depth of 9.0 feet in front of the weir wall and a minimum 3.0-foot side water depth in the compartment that supplies the transfer pumps.
11. Based on 120 feet of 30-inch pipe from the head control box to the ammonia-injection point.
12. Based on the volume of a clearwell with a 60.0-foot diameter and a 24.0-foot side water depth. Assumes a minimum water level of 10.0 feet, or 42% of the nominal tank capacity.
13. Assumes superior hydraulic conditions in the clearwell due to the presence of a perforated internal riser with diffusion plates and four internal baffle walls.

As you review the T_{10} table, you will observe that no disinfection credit was allowed for the filter influent channel, which runs the length of the filter battery, because water is diverted from the channel at six different locations along its length. In addition, the volume of the head control box was based on the average water level maintained in the two-compartment structure rather than on the volume maintained in the first compartment. Finally, the worst-case—instead of the maximum—operating level was used to estimate the volume of variable-level contact basins, such as clearwells.

Note that multiple flow rates were used to determine the T_{10} values for individual units in two of the three disinfection zones. Although this approach is clearly the most versatile, it is not well suited for evaluating the performance of the plant on a daily basis and complying with the reporting requirements. As a result, we have prepared another table to help the operators complete their SWMORs. In Table A-2, we have characterized the T_{10} available in each of the three disinfection zones based on the flow rate through the units that contribute most to the disinfection process within that zone. We have also provided the operators with the disinfection requirements that they must meet on an ongoing basis.

Table A-2. Disinfection parameters for Aguaville WSC's Schwartz SWTP.

APPROVED CT-STUDY PARAMETERS						PERFORMANCE STDs	
Parameters	Disinfection Zones					Log Inactivation	
	D1	D2	D3	D4	D5	*Giardia*	Viruses
Flow rate (MGD)	1.440	0.480	0.960	NA	NA	0.5	2.0
T_{10} time (minutes)	46.7	11.7	222.1	NA	NA		

As you review Table A-2, you will note that we have based the T_{10} time for zone D1 on the volume of, and flow rate through, an individual clarifier. Similarly, T_{10} times for zones D2 and D3 are based on a single filter and a clearwell, respectively. We have taken this approach because it allows the plant to continue to operate when one of the respective units is out of service for backwashing, inspection, or repair.

Please ensure that the operators understand that they need to base their CT calculations for zone D1 on the maximum flow rate through an individual clarifier and the calculations for zones D2 and D3 on the filter and clearwell that are experiencing the highest flow rate, respectively. If the flow rate through individual treatment units is not being measured, the operators should assume an equal distribution of water in parallel treatment units.

If you have any questions concerning our evaluation or if we may be of other assistance, please contact us by e-mail at <CTstudy@tceq.texas.gov>, by phone at 512-239-4691 or at the TCEQ's address.

Sincerely,

Ima Competent, P.E.

Ima Competent, P.E.
Public Drinking Water Section, MC 155
Water Supply Division

Enclosure: Printout of the CT Study Template for the PDWS SWTP

Enclosure A

Printout from March 23, 2011 CT-Study Spreadsheet
for the Aguaville Water Supply Corporation's
Schulze Surface Water Treatment Plant

CT STUDY

FOR PUBLIC WATER SYSTEMS THAT ARE USING SURFACE WATER SOURCES OR GROUND WATER SOURCES UNDER THE INFLUENCE OF SURFACE WATER (cont.)

Description Worksheet

PUBLIC WATER SYSTEM NAME:	**Aguaville WSC**	**PWS ID No.:**	**7654321**
PLANT NAME OR NUMBER:	**Schulze Plant**	**Month:**	**March**
		Day:	**23**
		Year:	**2011**

Enter a detailed narrative description of the plant treatment processes and disinfection protocol.

The Aguaville WSC's Schulze Surface Water Treatment Plant (SWTP) is supplied by a raw water pump station located near the Lake Allen R. Gammage Dam. The raw water pump station consists of two 1000-gpm and one 1,500-gpm raw water pumps which discharge to a 24-inch raw water transmission line that supplies the SWTP which is located about 1/2 mile from the Lake.

The design capacity of the Schulze SWTP is 2,000 gpm. The SWTP consists of an in-line rapid mix, a splitter box, a pair of 0.150 MG solids-contact, slurry-recirculation clarifiers, a filter splitter box/channel, six mixed-media gravity filters, a head control box, three 1,000 gpm transfer pumps, and three 0.50-MG baffled clearwells that operate in parallel.

The proposed disinfection protocol utilizes a standby chlorine application point located upstream of the in-line rapid mix; a primary chlorine injection point at the inlet to the filter splitter box; and a booster chlorination point at the high service pump station. There is a standby injection point for liquid ammonium sulfate (LAS) located just downstream of the rapid mix and a primary injection point at the header which supplies the three clearwells.

The disinfection process utilizes the following three disinfection zones:
D1 - the clarifiers
D2 - the six filters, head control box, and piping
D3 - the three clearwells

The proposed disinfection protocol involves pre-chlorination followed by LAS addition to form chloramines so a total chlorine residual enters the distribution system.
In D1, the clarifiers, no disinfectant residual is normally maintained.
In D2, chlorine will be injected at the inlet to the filter splitter box, with a free chlorine residual maintained through the filters and head control box. The sample location for D2 is at the head control box.
LAS will be added about 120 feet downstream of the chlorine residual sampling point at the head control box. A chloramine residual will be maintained in D3, the clearwells.

CT STUDY

FOR PUBLIC WATER SYSTEMS THAT ARE USING SURFACE WATER SOURCES OR GROUND WATER SOURCES UNDER THE INFLUENCE OF SURFACE WATER (cont.)

Schematic Worksheet

PUBLIC WATER SYSTEM NAME:	Aguaville WSC	**PLANT NAME OR NUMBER:**	Schulze Plant
PWS ID No.:	7654321	**Date:**	March 23, 2011

Use this worksheet to create your plant schematic with the Microsoft Drawing Tools.
If you are not familiar with the drawing tools, you may create your schematic using any other suitable medium.
Please refer to Section 3.3 of the Guidance Manual for instructions and guidance.

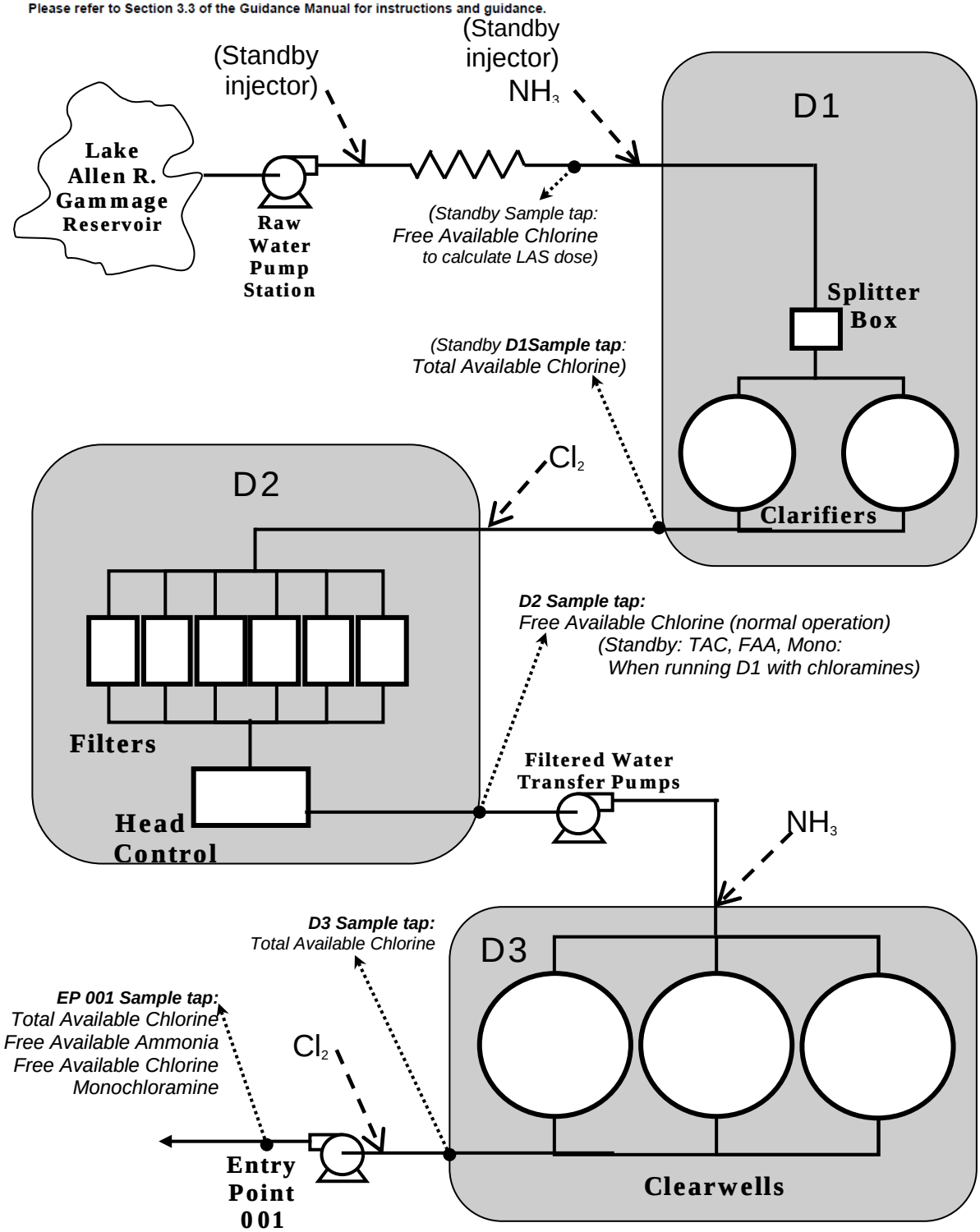

CT STUDY

FOR PUBLIC WATER SYSTEMS THAT ARE USING SURFACE WATER SOURCES OR GROUND WATER SOURCES UNDER THE INFLUENCE OF SURFACE WATER (cont.)

T10 Details Worksheet

PUBLIC WATER SYSTEM NAME: Aguaville WSC **PWS ID No.:** 7654321

PLANT NAME OR NUMBER: Schulze Plant **Date:** March 23, 2011

Treatment Plant Capacity 2.880 mgd
2,000 gpm

Disinfection Zone: D1 **Disinfectant:** Free Chlorine

Unit - 1 Type: Piping Shape: Pipe

Further Description: Water to splitter box after rapid mix

Characteristic			Comments
Number of Units	1		Dimensions reported by Grenn & Barrett Consultants in 2/3/11 submission
Diameter	24	in	Dimensions reported by Grenn & Barrett Consultants in 2/3/11 submission
Length	120	ft	Dimensions reported by Grenn & Barrett Consultants in 2/3/11 submission
Volume (each)	2,820	gal	
Flow Rate (each)	2,000	gpm	
Detention Time	1.4	min	
Baffling Factor	1.0		Piping
			Baffling Characteristics: Perfect
			Approved Baffling Factor:
T_{10}	**1.4**	**min**	

Unit - 2 Type: Other Shape: Rectangular

Further Description: Coagulated water splitter box

Characteristic			Comments
Number of Units	1		Dimensions reported by Grenn & Barrett Consultants in 2/3/11 submission
Length	6	ft	Dimensions reported by Grenn & Barrett Consultants in 2/3/11 submission
Width	6	ft	Dimensions reported by Grenn & Barrett Consultants in 2/3/11 submission
Side Water Depth	6	ft	Dimensions reported by Grenn & Barrett Consultants in 2/3/11 submission
Volume (each)	1,616	gal	
Flow Rate (each)	2,000	gpm	
Detention Time	0.8	min	

CT STUDY

FOR PUBLIC WATER SYSTEMS THAT ARE USING SURFACE WATER SOURCES OR GROUND WATER SOURCES UNDER THE INFLUENCE OF SURFACE WATER (cont.)

T10 Details Worksheet

Baffling Factor	0.1		Baffling Characteristics:	Unbaffled
			Approved Baffling Factor:	
T_{10}	**0.1**	**min**		

Unit - 3 Type: **Clarifier** Shape: **Circular**

Further Description: Solids contact clarifiers

Characteristic			Comments
Number of Units	2		Dimensions reported by Grenn & Barrett Consultants in 2/3/11 submission
Diameter	45	ft	Top of mixing chamber has a 15 foot diameter per G&B sheet 3 of 9
Side Water Depth	12	ft	Dimensions reported by Grenn & Barrett Consultants, 2/3/11, page 4 of 9
Center Water Depth	14	ft	Dimensions reported by Grenn & Barrett Consultants, 2/3/11, page 4 of 9
Volume (each)	150,718	gal	
Flow Rate (each)	1,000	gpm	HDT = 150.7 minutes and SOR(sed) = 0.71 gpm per square foot
Detention Time	150.7	min	
Baffling Factor	0.3		Slurry recirculation with skirt
			Baffling Characteristics: Poor
			Approved Baffling Factor:
T_{10}	**45.2**	**min**	
D1 FLOW RATE	**1.440**	**mgd**	
T10 SUM FOR D1	**46.7**	**min**	

Disinfection Zone: **D2** **Disinfectant:** **Free Chlorine**

Unit - 1 Type: **Filter** Shape: **Rectangular**

Further Description: Six multimedia filters: sand/anthracite

Characteristic			Comments
Number of Units	6		1/29/98 G&B engineering drawings, p. 2 of 9
Length	10	ft	G&B engineering drawings, 4 of 9
Width	8	ft	"
Media Depth	3.67	ft	G&B engineering drawings, 45 of 9
Underdrain Depth	1	ft	"
Minimum Water Depth Over Media	4.33	ft	"
Average Porosity	50	%	Assumed
Volume (each)	4,288	gal	

CT STUDY

FOR PUBLIC WATER SYSTEMS THAT ARE USING SURFACE WATER SOURCES OR GROUND WATER SOURCES UNDER THE INFLUENCE OF SURFACE WATER (cont.)

T10 Details Worksheet

Assumes equal flow to each filter operating in parallel with all filters in service. Filter Loading Rate = 4.2 gpm/ft2

Flow Rate (each)	333	gpm
Detention Time	12.9	min
Baffling Factor	0.7	
T_{10}	**9.0**	**min**
D2 FLOW RATE	**0.480**	**mgd**
T10 SUM FOR D2	**9.0**	**min**

Filter

Baffling Characteristics: Superior

Approved Baffling Factor:

Disinfection Zone: D3 **Disinfectant:** Chloramines

Unit - 1 Type: Clearwell Shape: Circular

Further Description:

Characteristic			Comments
Number of Units	3		
Diameter	60	ft	
Side Water Depth	24	ft	
Center Water Depth	24	ft	
Maximum Volume (each)	507,683	gal	
Minimum Operating Level	10	ft	
Worst Case Volume (each)	211,534	gal	
Percent of Maximum Volume	42	%	
Worst Case Volume (each)	211,534	gal	
Flow Rate (each)	667	gpm	
Detention Time	317.1	min	
Baffling Factor	0.7		
T_{10}	**222.0**	**min**	
D3 FLOW RATE	**0.960**	**mgd**	
T10 SUM FOR D3	**222.0**	**min**	

Baffling Characteristics: Superior

Approved Baffling Factor:

Disinfection Zone: D4 **Disinfectant:**

Disinfection Zone: D5 **Disinfectant:**

CT STUDY

FOR PUBLIC WATER SYSTEMS THAT ARE USING SURFACE WATER SOURCES OR GROUND WATER SOURCES UNDER THE INFLUENCE OF SURFACE WATER (cont.)

Summary Worksheet

PUBLIC WATER SYSTEM NAME: Aguaville WSC **PWS ID No.:** 7654321

PLANT NAME OR NUMBER: Schulze Plant **Date:** March 23, 2011

Disinfection Zone	Treatment Unit	Volume* (each) (gal)	Flow Rate* (each) (MGD)	Baffling Factor*	T_{10}* (min) Unit	T_{10}* (min) Zone
D1	Water to splitter box after rapid mix (1)	2,820	2.880	1	1.410	46.71
	Coagulated water splitter box (1)	1,616	2.880	0.1	0.081	
	Solids contact clarifiers (2)	150,718	1.440	0.3	45.215	
D2	Six multimedia filters: sand/anthracite (6)	4,288	0.480	0.7	9.015	9.01
D3	Clearwell (3)	211,534	0.960	0.7	222.000	222.00

* These values are calculated on the T10 Details Sheet

TCEQ - (09-01-11) CT STUDY

Appendix B: MULTIPLE-BARRIER TREATMENT AND CT STUDIES

B.1 MULTIPLE-BARRIER TREATMENT

Surface water treatment plants must take a raw water source of variable quality and consistently produce high-quality finished water. Plants employ a series of treatments to remove and inactivate disease-causing organisms such as cysts, viruses, and bacteria. Each individual process represents a barrier to prevent the passage of microorganisms through the plant. By employing several barriers, the plant progressively reduces the number of organisms passing through each barrier. This multi-barrier approach minimizes the likelihood that microorganisms will pass through the entire treatment system and survive in the water supplied to the public.

The two main barriers that a surface water treatment plant must use are removal and inactivation. The combination of removal and inactivation must meet the requirements of the EPA's and TCEQ's surface water treatment rules. Removal means taking particles out of the water; inactivation means disinfecting the pathogens so they can't reproduce.

The effectiveness of the overall treatment process is often evaluated based on the percentage of pathogenic organisms that are removed or inactivated by the plant. It is hard to directly calculate the total "percent removal and/or inactivation" achieved because that involves subtracting and multiplying fractions. On the other hand, it is easy to calculate the overall effectiveness of the treatment plant by simply adding the log percent removal and inactivation achieved during each treatment step.

Log Removal and Inactivation

Log removal or *inactivation* expresses the percent of organisms removed or inactivated in terms of powers of 10, or *logs*. For example, in the second row of Table B-1, a "1-log inactivation" means a 10^1-fold, or 10-fold, reduction in the numbers of viable disease-causing organisms and, in the table's fourth row, a "2-log inactivation" means a 10^2-fold, or 100-fold, reduction. Table B-1 contains other inactivation numbers commonly used and shows what they mean. In mathematical terms, the log removal or inactivation for a specific treatment is the negative of the base-10 logarithm of the fraction of the pathogen that remains after the treatment step.

Table B-1. Removal and inactivation levels and their significance.

Removal or Inactivation Level Achieved	Reduction Factor (Fold Reduction)	% of Original Organisms		Significance
		Removed or Inactivated	Still Infectious	
0.5-log	3.16	68.4	31.6	
1.0-log	10	90	10	
1.5-log	31.6	96.8	3.16	
2.0-log	100	99	1	Minimum removal requirement for *Cryptosporidium*
2.5-log	316	99.7	0.3	
3.0-log	1000	99.9	0.1	Minimum removal or inactivation requirement for *Giardia lamblia* cysts
4.0-log	10,000	99.99	0.01	Minimum removal or inactivation requirement for viruses
5.0-log	100,000	99.999	0.001	
6.0-log	1,000,000	99.9999	0.0001	
7.0-log	10,000,000	99.99999	0.00001	

Turbidity Removal: The First Step

Multiple treatment processes (coagulation, flocculation, sedimentation, and filtration) occur in series to remove turbidity, cysts, and other disease-causing microorganisms. Removal of turbidity is an important measure of a plant's ability to produce a safe water supply because disease-causing organisms are small particles (bacteria, cysts, and viruses) within the size range normally considered as turbidity. Effective turbidity removal is an essential part of overall treatment because some of the pathogenic microorganisms are extremely resistant to chemical disinfection.

Settled Water

We do not require you to monitor the turbidity of the water leaving your clarifier or sedimentation basin. However, the settled-water turbidity level can provide you with critical information about the operation of your plant. Specifically, testing settled water turbidity can help you evaluate the effectiveness of coagulation, flocculation, and sedimentation. Consequently, we strongly recommend that you test settled-water turbidity at the outlet of each sedimentation basin or clarifier at least once per day. We also recommend that you monitor the levels of settled-water turbidity 2 to 6 hours after you change your chemical dose or you experience a significant change in raw water quality.

We have not set turbidity limits for settled water. However, you should try to keep your settled-water turbidity level of each sedimentation basin below 1.0 NTU if your raw-water turbidity level is 10 NTU or less. If your raw-water turbidity level is higher than 10 NTU, you should try to keep the settled water turbidity of each basin below 2.0 NTU. Lower settled-water turbidity levels typically mean that you can produce longer filter runs and better filtered-water quality.

Individual Filter Effluent, or Filtered Water

You are required to test levels of individual-filter-effluent (IFE) turbidity. IFE turbidity monitoring is crucial because a single filter's poor performance can be hard to detect if you are only monitoring the turbidity of the water as it leaves the entire filter bank or the clearwell.

The IFE monitoring requirements depend on the size of your system and the design of the plant. For example, if your plant uses more than two conventional filters (such as a gravity or pressure filter containing sand, anthracite, or any other granular media), it must monitor and record the turbidity level of the water produced by each filter once every 15 minutes that the filter is sending water to the clearwell. It doesn't matter how many people your plant serves; if it has more than two conventional filters, each filter must have an online turbidimeter and recorder. Figure B-1 shows the monitoring requirements for these plants.

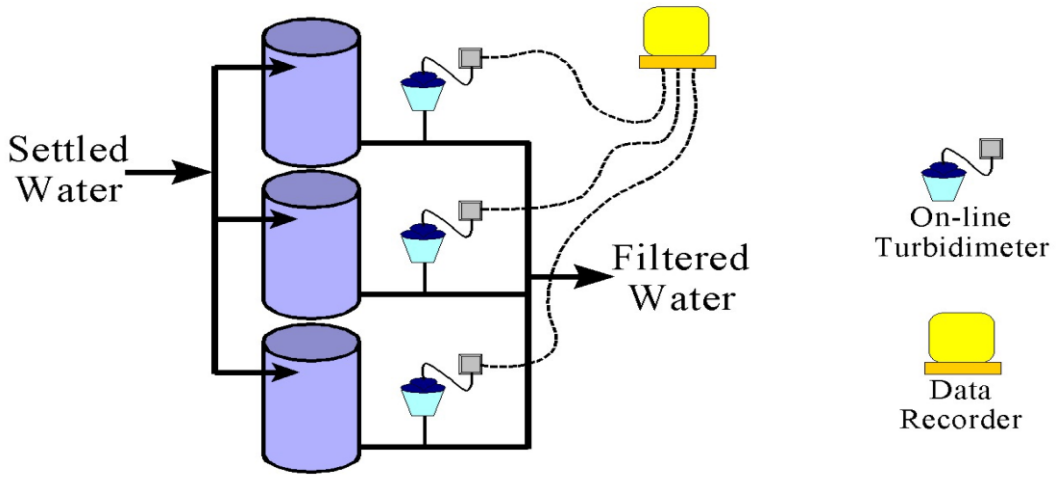

Figure B-1. Schematic showing IFE-monitoring requirements for plants with more than two conventional filters.

If your plant has only two conventional filters, the monitoring requirements depend on how many people your plant serves. If your plant serves 10,000 people or more (including those served through your wholesale connections), you must monitor and record the turbidity level of each filter at least once every 15 minutes. Option 1 in Figure B-2 represents the monitoring requirements for those larger plants. If your plant serves fewer than 10,000 people (including those served through your wholesale connections), you must either:

- monitor and record the turbidity level of each filter at least once every 15 minutes OR
- monitor and record the turbidity level of blended water entering the clearwell at least once every 15 minutes AND monitor the turbidity level leaving each filter at least once each day.

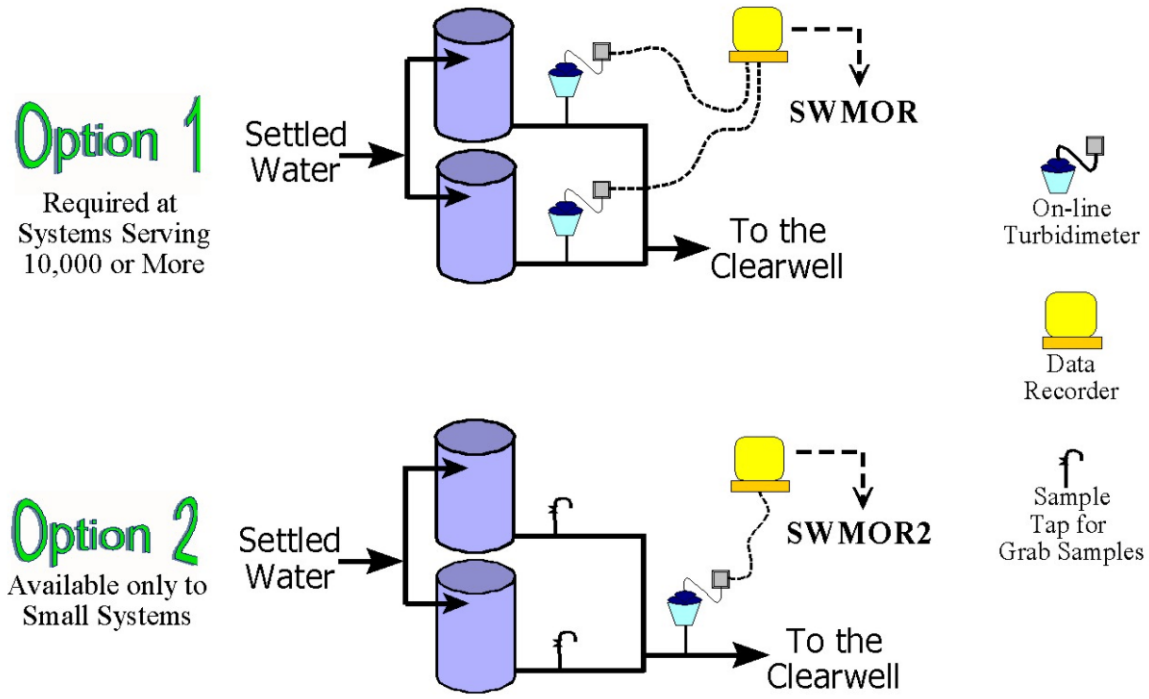

Figure B-2. Schematic showing IFE-monitoring requirements for plants with only two conventional filters.

Plants that use cartridge filters may have even more IFE monitoring options (Figure B-3). The information in Figure B-3 is based on the monitoring options that existed at the time that this document was published. However, some of these options may be restricted or eliminated as we revise our implementation policies and regulatory requirements in response to new federal rules or guidance from the EPA. To keep aware of the latest developments, you should periodically check the EPA's drinking-water Web pages:

water.epa.gov/drink/index.cfm

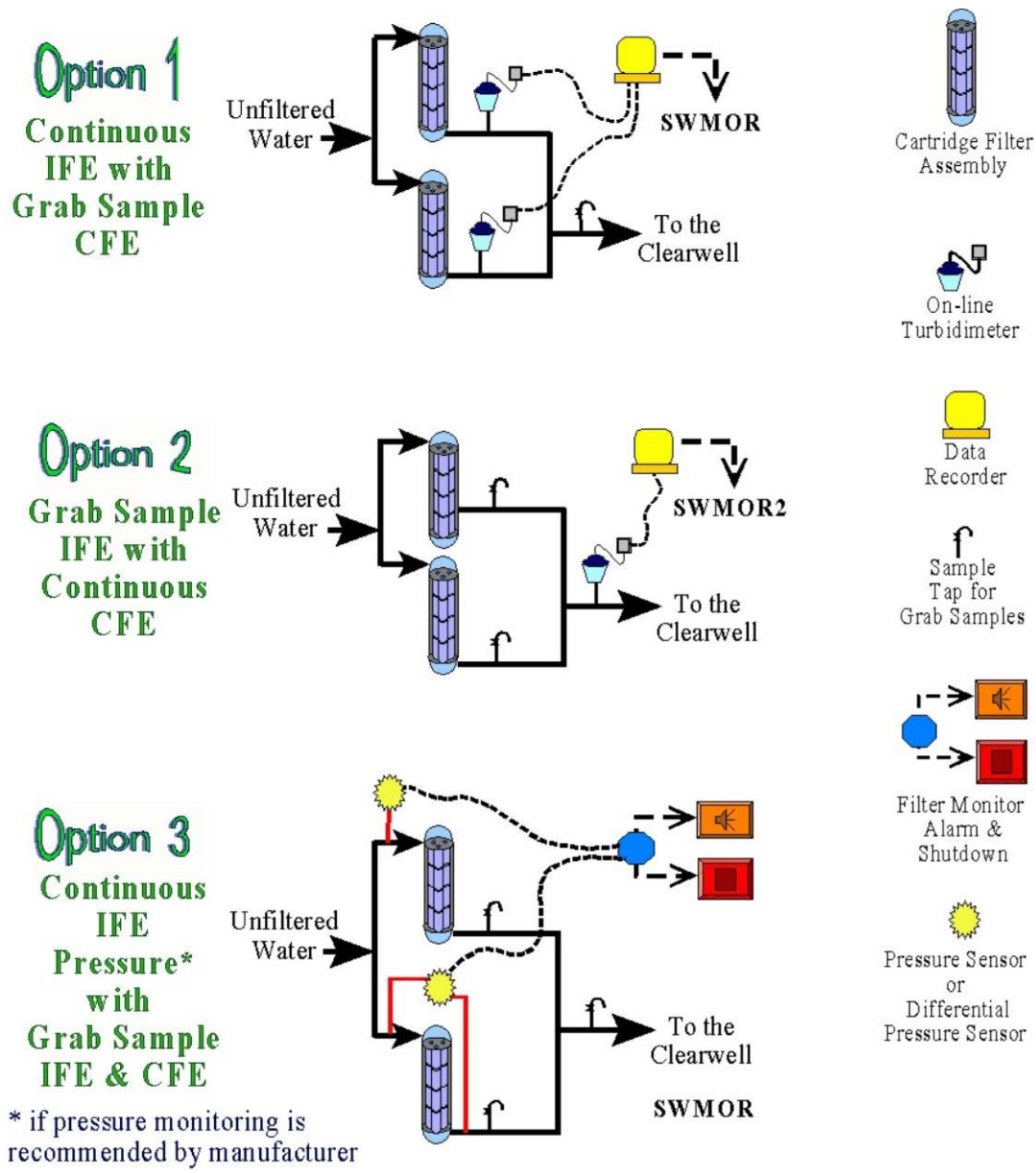

Figure B-3. Schematic showing IFE-monitoring requirements for plants with cartridge filters.

Plants that use membrane filters must continuously monitor the turbidity level or particle count in the water produced by each rack, or bank, of membrane modules or units. Figure B-4 shows the IFE monitoring requirements for a plant using 10 membrane units that are configured in two racks of five modules each.

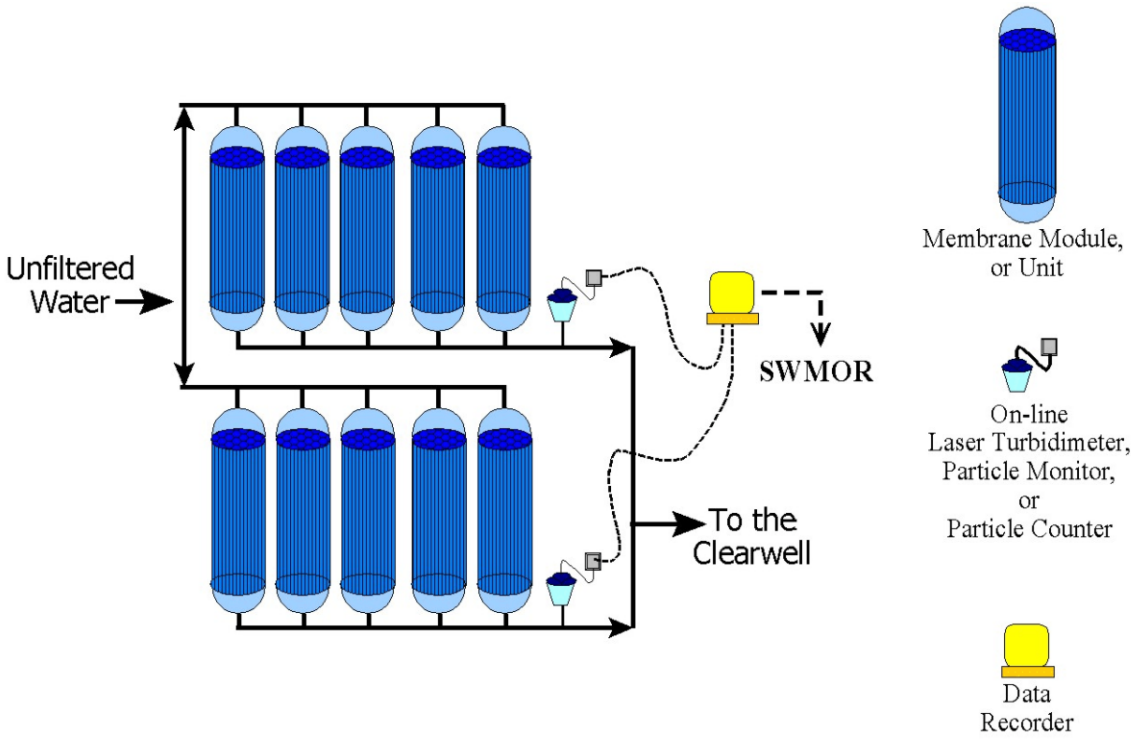

Figure B-4. Schematic showing IFE-monitoring requirements for a plant with membrane filters.

Plants that use membranes may use one of three types of devices to continuously monitor membrane performance. These devices include a laser turbidimeter such as the Hach FilterTrac 660, a particle monitor, or a particle counter. Since membrane units are often backwashed many times each day, we normally require membrane plants to collect and record performance data at least once every 5 minutes instead of once every 15 minutes. The monitoring and reporting requirements for membrane plants are likely to change dramatically over the next few years in response to federal mandates and technological developments. To keep aware of the latest developments, you should periodically check this TCEQ Web page:

www.tceq.texas.gov/drinkingwater/swmor

You may find it particularly useful to visit the Web page that contains our Public Drinking Water Program staff guidance statements:

www.tceq.texas.gov/goto/dw-staff

Special Filter Studies

If your filters are equipped with IFE turbidimeters, we require you to investigate and report the cause of any IFE turbidity readings that are above 1.0 NTU. If your system serves at least 10,000 people, we also require you to investigate any instance when an IFE turbidity level is greater than 0.5 NTU exactly 4 hours after the filter has been placed into, or returned to, service.

The specific type of investigation you must conduct depends on the severity and frequency of the malfunction. Some examples follow.

- Each time that two consecutive 15-minute IFE turbidity readings exceed 1.0 NTU, you must either (1) identify the cause of the elevated readings, or (2) profile the filter. Whichever of these two investigations you perform, send us the results.
- If a specific filter exceeds 1.0 NTU on three separate occasions during any consecutive three-month period, you must also conduct a filter assessment. Again, you must supply us with the results of the assessment.
- If a single filter or any combination of filters ever produces an IFE turbidity level above 2.0 NTU during two consecutive months, you must arrange for a third-party investigator to conduct a comprehensive performance evaluation at your plant. You must provide us with the CPE results and a corrective action plan to address any performance-limiting factor that the evaluator identified.

We realize that these are very complex rules, but they are very important to prevention of waterborne disease. Consequently, we developed the series of special report forms that are described in Chapters 4, 5, and 6.

If your system (1) serves fewer than 10,000 people, (2) has no more than two filters, and (3) continuously monitors blended water entering the clearwell instead of the water leaving each filter, you must conduct special studies based on your CFE turbidity readings instead of the daily grab samples that you collect from each filter.

Combined Filter Effluent, or Treated Water

Combined filter effluent is the water that is produced by the plant after it has combined all the water produced by individual filters. We have traditionally referred to your plant's CFE as its "treated water." However, at some plants, additional treatment steps like pH adjustment, rechlorination, or fluoride addition occur after the point where the filtered water is combined. Even if your plant does not perform post-filtration treatment, the turbidity levels of the CFE and treated water may differ because the sediment that tends to accumulate in a clearwell may occasionally end up raising the turbidity level in the treated water.

We strongly encourage you to install a CFE sampling point for the reasons described above. This sampling point *must* be located after all of the filtered water from individual filters has been combined and *should* be located upstream of any post-filtration treatment process. However, if your plant design limits your ability to install or use that sampling point, we will allow you to monitor the level of treated-water turbidity in lieu of monitoring CFE turbidity.

Our rules currently require you to produce water with a CFE turbidity level of 0.3 NTU or lower in at least 95% of the tests you conduct each month, and limits the turbidity level for each individual CFE sample to 1.0 NTU. If your CFE readings exceed these levels, you will be required to notify your customers that you have failed to produce water of acceptable quality.

As we stated earlier, lower turbidity levels generally indicate better plant performance, higher-quality drinking water, and lower risk for waterborne diseases. Consequently, the TCEQ strongly encourages public water systems to keep turbidity as low as possible. A properly designed, operated, and maintained treatment plant should be able to produce water with a turbidity level consistently below 0.1 NTU.

Disinfection: The Second Step

A typical surface water treatment plant cannot possibly remove all of the disease-causing organisms that might be present in the raw water. Therefore, the treatment must include disinfection to kill or inactivate the pathogens that are not removed.

The effectiveness of disinfection depends on several factors:

1. **The type of disinfectant that the plant uses.** Some disinfectants are stronger than others. The stronger disinfectants will typically require a lower dose to achieve the desired level of inactivation. However, some of the strongest disinfectants, like ozone, do not produce long-lasting residuals.
2. **The concentration of the disinfectant.** Whichever disinfectant you use at your plant, raising the disinfectant residual generally improves the effectiveness of the disinfection process. However, while increasing the residual increases the number of organisms that you kill, it can also increase your disinfection by-product levels.
3. **The amount of time that the disinfectant is in contact with the water**. Obviously, the longer that you expose a pathogen to a disinfectant, the more likely it is that you will kill it.
4. **The pH of the water.** Some disinfectants are affected by the pH of the water. Chlorine is particularly affected because it changes from its hypochlorous acid form to its less effective hypochlorite ion form as the pH rises. Chlorine dioxide, on the other hand, is less effective at low pH levels than above pH 7.5.
5. **The temperature of the water.** Disinfectants are less effective at lower than at higher temperatures because chemical reactions occur more slowly at lower temperatures, and because many pathogens tend to become inactive when the temperature drops. This is generally not a problem unless your water temperature drops below 5°C (41°F).

Some of these factors, like residual concentration and pH, can be controlled to a great extent by the operator. Other factors, like the type of disinfectant and the contact time, are limited by the design of the plant and water demands.

CT and $CT_{required}$

The type of disinfectant that a plant uses and the pH and temperature of its water tend to remain relatively constant on a day-to-day basis. Consequently, we tend to evaluate the disinfection process using the concentration and time factors. Often, we describe the relationship between the disinfectant concentration and time using the term “CT” and the following equation.

$$CT = \text{Concentration of disinfectant (mg/L)} \times \text{Time (minutes)} \qquad \text{(Equation B-1)}$$

Basically, the less time you have to disinfect, the more disinfectant you have to apply to maintain the same CT value.

Just as turbidity levels and particle counts are used to evaluate the effectiveness of physical removal processes, *CT values* are used to assess the performance of chemical disinfection processes. The actual CT value for a disinfection zone is obtained by multiplying the actual disinfectant concentration, "C", by the time, "T", that the disinfectant was in contact with the water. The actual CT value (that is, CT_{actual}) is then compared to the CT required to achieve the desired level of pathogen inactivation (that is, $CT_{required}$). The log inactivation achieved during the disinfection process can be calculated as shown below:

$$\text{Log inactivation achieved} = \frac{\text{Actual CT}}{\text{CT required for N-logs of inactivation}} \times \text{N-logs} \qquad \text{(Equation B-2)}$$

Although the overall CT concept may seem simple and straightforward, applying the approach is complicated because:

- The actual contact time available at your plant is affected by the amount of short-circuiting that occurs within your contact basins.
- The required CT varies based on:
  - the pathogen being inactivated,
  - the number of log inactivations, or N-logs, that you are required to achieve,
  - the actual plant operating conditions, that is, the pH and temperature of the water, and
  - the type and concentration of the disinfectant.
- Your plant may use several disinfectant-application points and may even adjust the pH level during the process.

Because applying this CT approach can be so difficult and time-consuming, we have incorporated a small Visual Basic computer program in the SWMOR spreadsheet. This program uses several complex mathematical equations to calculate CT_{actual} based on the information you enter on your report.

Distribution-System Residual: The Final Step

To ensure that the treated drinking water stays safe to drink, you must make sure that it does not become contaminated before reaching the customer's glass. To achieve this goal, water systems keep pathogens out of the water supply, maintain adequate water pressure throughout the system, prevent cross-connections to untreated water supplies, and ensure that there is enough disinfectant everywhere in the distribution system. This disinfectant concentration in the distribution system is often referred to as the *distribution residual*.

B.2 CT STUDIES AND THE CT-STUDY-APPROVAL LETTER

The CT study is an evaluation of your plant's disinfection process. Its purposes are to:

- identify the number of disinfection zones at your plant
- determine the effective contact time, or T_{10}, in each zone
- define the minimum level of disinfection that must be attained at the plant

Every treatment plant that uses surface water or groundwater that is under the direct influence of surface water must have a current, TCEQ-approved CT study. You must submit changes to your CT study if you make a significant change to your disinfection practice. You may not make a change to your disinfection process without our prior written approval. Significant changes to disinfection practice include any of the following:

- changing the type of disinfectant
- moving the point of disinfectant addition
- changing physical facilities in such a way that more or less effective contact time is used
- changing the approved capacity of the plant
- any other change that we consider significant

Every plant is required to have a CT-study-approval letter on file to document that we have reviewed and approved the plant's CT study and its current disinfection process. See Appendix A for a sample CT letter like the one for your plant.

In order to understand the importance of the CT-study-approval letter, you need to understand how we evaluate the disinfection process at your plant. The critical factors we evaluate are:

- the number of disinfection zones and treatment trains at the plant
- the maximum flow rate though each zone
- the baffling characteristics of each disinfectant contact unit
- the T_{10} time in each zone

Disinfection Zones and Treatment Trains

A *disinfection zone* is defined as that section of the plant starting at a disinfectant injection or monitoring point, and ending at the subsequent disinfectant injection or monitoring point. A disinfection zone contains one or more treatment units and the associated piping. Every disinfectant-injection point is the start of a new disinfection zone, even if it is not always used. Every injection point must have an associated monitoring point. However, a plant may have only one disinfectant point and choose to monitor at more than one point, creating multiple disinfection zones.

The starting point for analyzing your disinfection process is to identify the unit processes and the disinfection injection and monitoring points. It is usually helpful to prepare a sketch or schematic of the plant. A drawing, like the ones shown in Figures B-5 though B-7, may help in defining disinfection zones.

Figure B-5 shows a small plant with pre- and post-disinfectant application points for chlorine. Even at this small plant, the operator has some choices regarding disinfection. For example:

- The operator can choose to use a single chlorine-monitoring point for the pre-disinfection application point. In this case, the upper schematic shows that there will be a single pre-disinfection zone that:
  - starts at the chlorine-injection point located in the pipe between the raw water pumps and the sedimentation basin and
  - ends at the monitoring point after the filters.
- The operator can choose to use two or more monitoring points for the pre-disinfectant. The lower schematic shows that this monitoring strategy creates two pre-disinfection zones instead of one.

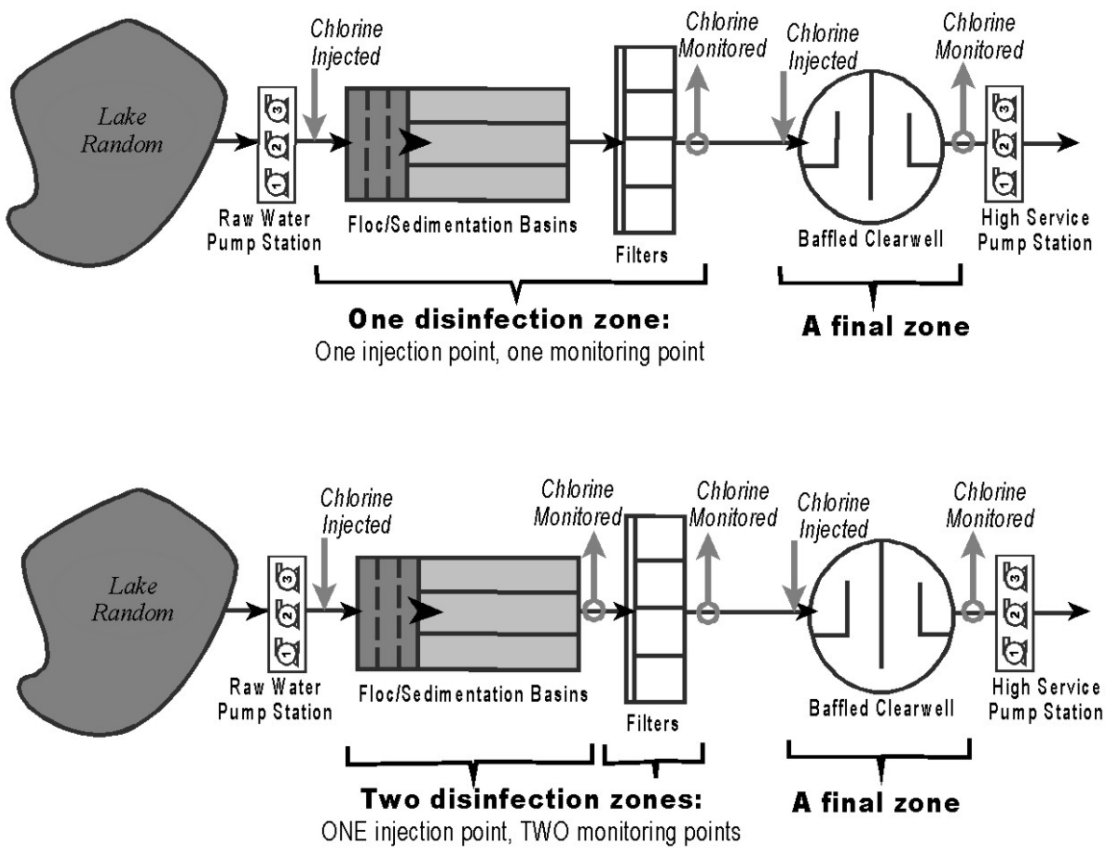

Figure B-5. Plant schematic of an SWTP with one chlorine-injection point.

Figure B-6 contains the schematic for a plant that has multiple chlorine injection points and uses several different types of disinfectants. The figure shows how the disinfection zones might be defined in this complex design.

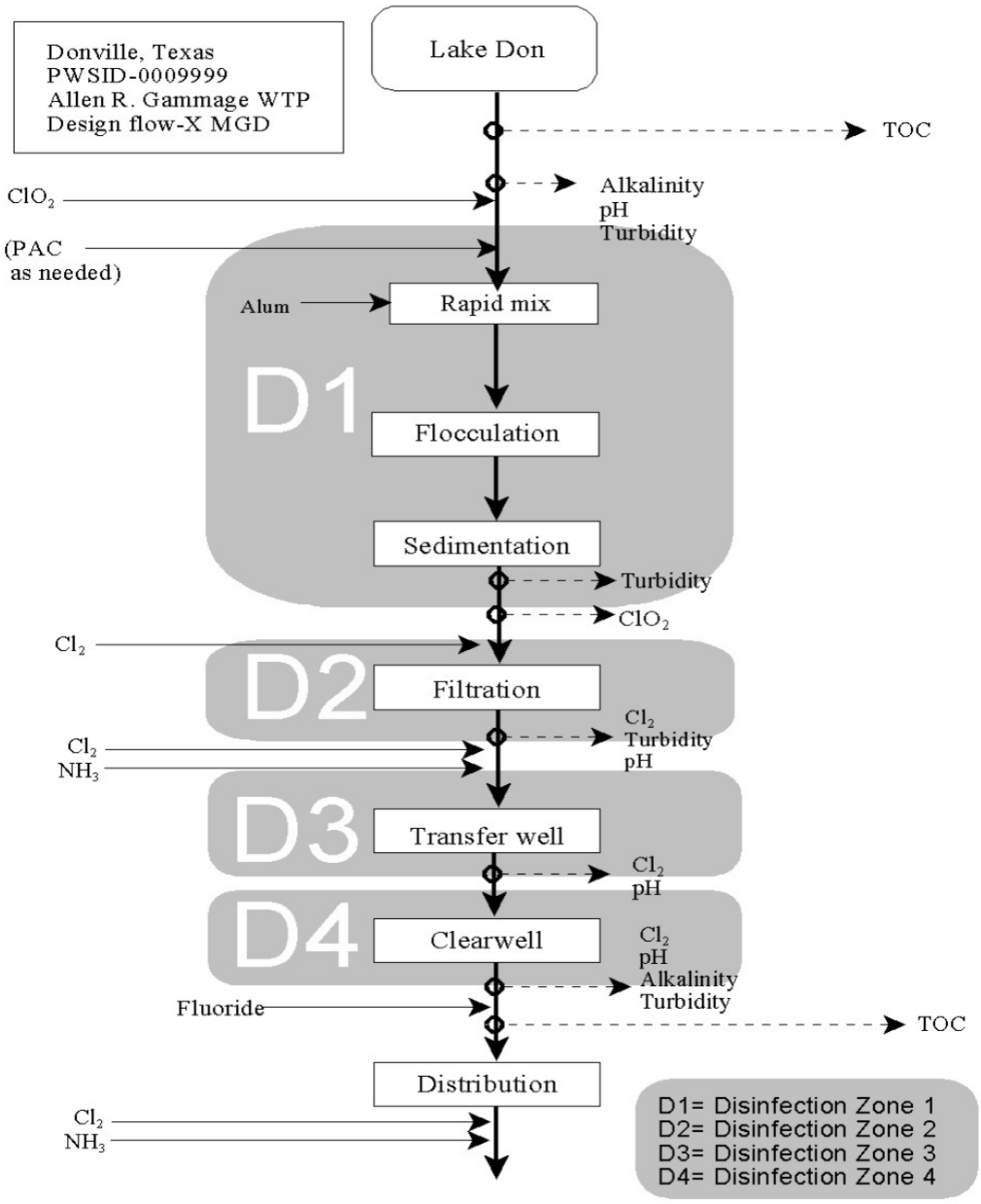

Figure B-6. Schematic of an SWTP with multiple disinfectant-application points.

Plants with multiple treatment trains may have parallel disinfection zones. The analysis of multiple treatment trains is not that much harder than the one for a single treatment train **if** the treatment trains are identical, they share a common disinfectant application point, and flow is split equally. If the treatment trains are very different, it may be more appropriate to treat the treatment trains as separate plants. Figure B-7 shows the schematics of two treatment plants. Figure B-7 shows a plant where it would be appropriate to define two trains. The complexity of the plant in the following schematic suggests that it might be more appropriate to redefine the facility as two plants instead of two trains.

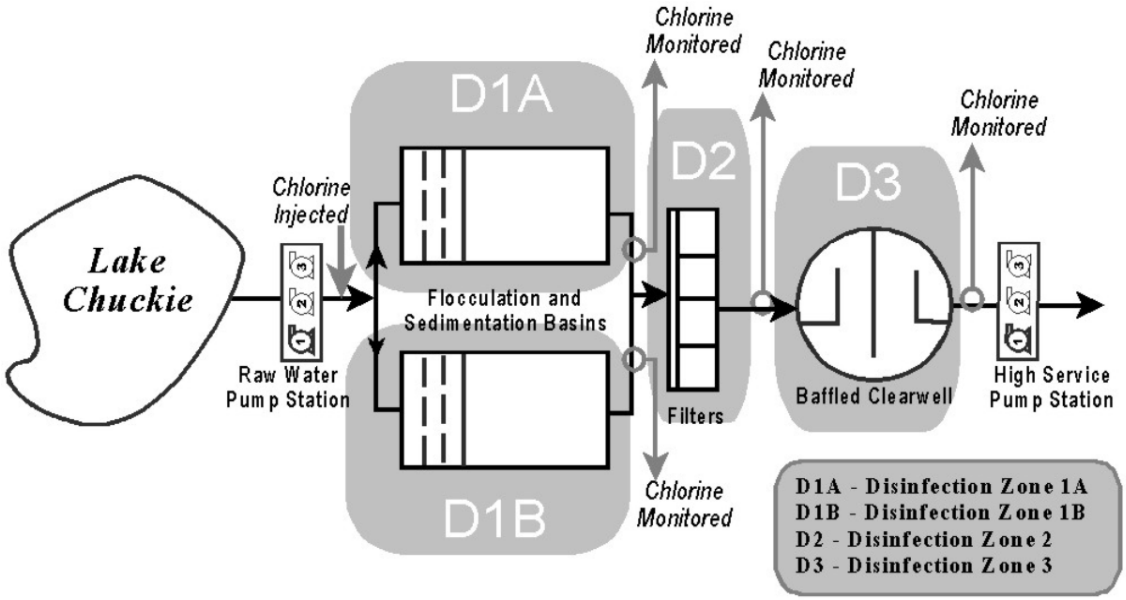

One SWTP with two parallel treatment trains in zone D1

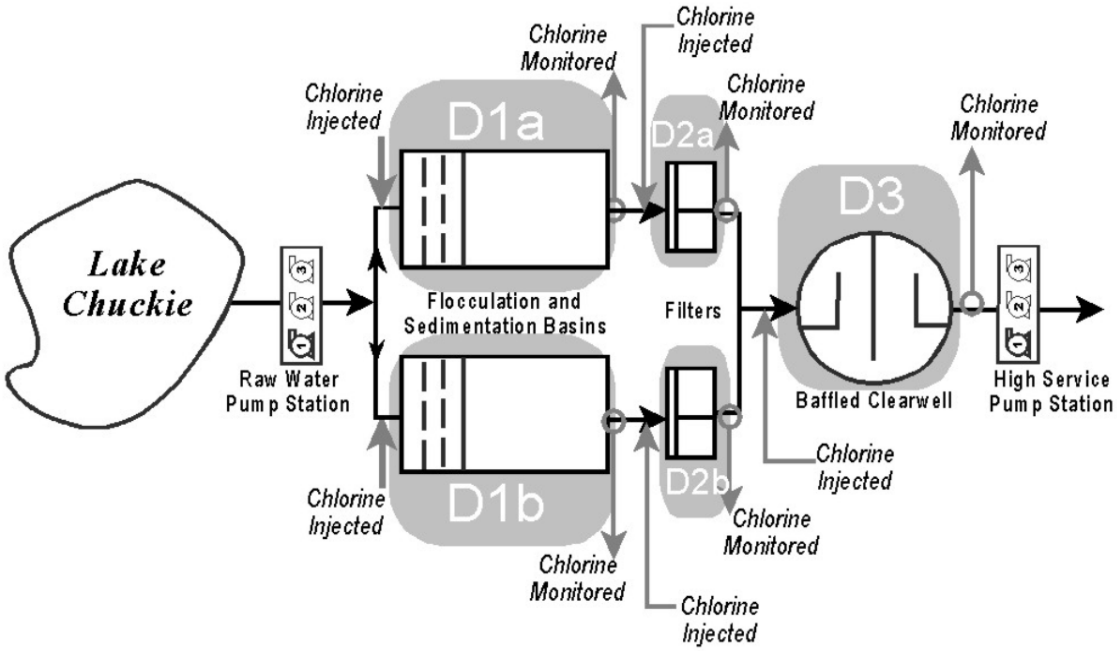

Two SWTPs with a common zone D3

Figure B-7. Schematic of an SWTP with multiple treatment trains.

Flow Rate and Effective Contact Time, T_{10}

The theoretical contact time in a basin is easily calculated by dividing the actual volume of the basin by the flow rate through it. When the flow rate increases, the time the water spends in the plant decreases. Therefore, we try to use the maximum flow rate through the disinfection zone when evaluating your disinfection process. If possible, we use your historical operational data to determine the peak hourly flow rate through the zone. If this information is not available, we may base the peak flow rate on the maximum raw water pump capacity or some other design feature of the plant.

IMPORTANT
The flow rate we used in our CT approval letter may be greater than the rated capacity of your plant. However, unless the letter specifically grants an exception to one or more of our minimum design requirements, the letter does not authorize you to operate above your regulatory design capacity. The only purpose the letter serves is to document that we have approved the disinfection protocol that you are using at your plant—even if you violate our other design criteria.

The theoretical contact time is dependent only on the volume of the basin and the flow rate of the water. However, the actual contact time depends on these two factors as well as on the hydraulic characteristics of the basin, that is, how much **short-circuiting** occurs within the basin. Short-circuiting occurs when individual drops of water do not remain in a basin for the same amount of time. Short-circuiting exists to a significant degree in basins that have inadequate baffling and in basins where mixing occurs.

Baffling Factors and Effective Contact Time, T_{10}

The effective contact time (T_{10}) in each disinfection zone is a function of the hydraulics of the basin. The flow through a pipe or a well-baffled basin is very different from the flow through a storage tank or a poorly baffled basin.

Consider the two sets of basins shown in Figure B-8. These two basins have the same shape and size and the only difference between them is that one is well baffled and the other is poorly baffled. Assume that flow rate of the water through each basin is the same and that a food-grade dye is injected at each of the inlets for one minute. In the well-baffled basin, the dyed water moves though the basin as though the water was a solid plug, that is, the dyed water that enters the basin first will leave the basin first. In the poorly-baffled basin, some of the dyed water moves through the basin faster than the rest of the water, that is, some of the dyed water that entered the basin last may exit before some of the water that entered first. As Figure B-8 shows, in an extreme case, much of the dyed water in a poorly-baffled basin will be discharged before any of the dyed water in the well-baffled basin even reaches the outlet.

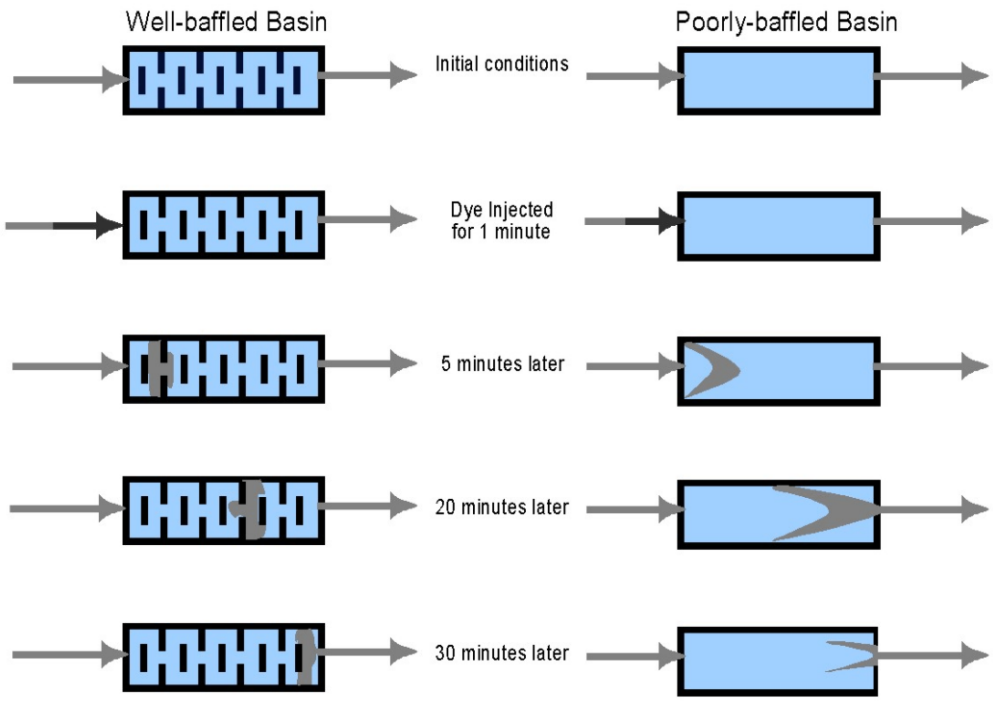

Figure B-8. Comparison of the flow patterns in well-baffled and poorly baffled basins.

Now consider the two treatment units shown in Figure B-9. The longest path a particle can take through a pipeline is not that different from the shortest path. It is different for an unbaffled mixing tank. In the case of a tank, one particle may flow through directly from the influent to the effluent. This short-circuiting particle will be in contact with the disinfectant for a relatively short time.

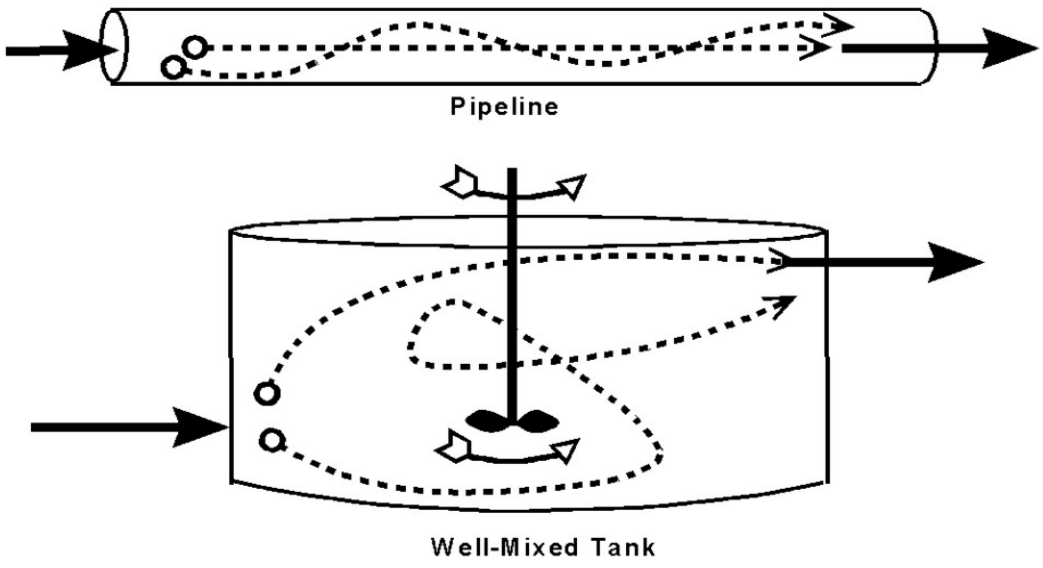

Figure B-9. Comparison of the flow patterns in a pipe and a well-mixed tank.

Although basins with mixers and poor baffling exhibit high levels of short-circuiting, some short-circuiting exists in all basins. The question becomes "How much short-circuiting do we allow before we determine the actual contact time?" To answer this question, a number of research studies were conducted on pilot plants and at full-scale facilities. Based on the results of these studies and a theoretical analysis of the problem, the EPA determined that only 10% short-circuiting should be allowed when determining the actual contact time.

Under those conditions, 10% of the water would receive slightly less disinfection than desired but the rest of the water would receive more than enough disinfection to meet the objectives. Since the actual contact time is based on a 10% short-circuiting allowance, the term T_{10} *time* is used to describe the actual disinfectant contact time at your full-scale plants. It should be noted that using the T_{10} time for CT calculations is a very conservative approach: in many cases 50% of the water actually receives twice the required level of disinfection, and 10% of the water might receive as much as four times more disinfection than required.

The next question becomes "How do we determine the T_{10} time for a given operating condition?" The best way to determine the T_{10} time in a disinfectant contact chamber is to run several tracer tests at different flow rates. During each of the tracer tests, you actually introduce a tracer, or marker, compound (such as a dye, fluoride, or other soluble material) into the water as it enters the contactor. You then run a series of tests to determine how long it takes for 10% of this tracer to reach the end of the basin. By running the tests at several different flow rates, you can determine if the hydraulic properties of the basin change as the flow rate changes.

The differences in hydraulics are described by the *baffling factor* (BF)—defined as the ratio of the effective contact time (T_{10}) to the theoretical detention time (TDT). The results of the tracer studies are used to determine a baffling factor that characterizes the hydraulic short-circuiting within the treatment unit. The relationship between the baffling factor, T_{10}, and the theoretical contact time can be expressed using the following equation:

$$Baffling\ Factor = \frac{T_{10}}{T_{10,\ Theoretical}} \qquad \text{(Equation B-3)}$$

$$= T_{10} \times \frac{Flow\ rate\ during\ the\ tracer\ test}{Volume\ during\ the\ tracer\ test}$$

The baffling factor is important because it is then used to calculate the T_{10} times at flow rates other than the ones used during the tracer study. The T_{10} can be calculated for any given operating condition using the following equation:

$$T_{10\ Current} = T_{10,\ Theoretical,\ Current} \times Baffling\ Factor$$

$$= \frac{Current\ Volume}{Current\ Flow\ Rate} \times Baffling\ Factor \qquad \text{(Equation B-4)}$$

You are probably aware that there are no spaces on pages 4 and 5 of the SWMOR for you to enter the volume and baffling factor for each disinfection zone. This is because we made two additional assumptions in order to significantly reduce the amount of data that you need to collect each day.

- First, we use a minimum water level when calculating the T_{10} for the treatment unit. By using a minimum volume, we ensure that the contact time under all operating conditions will be greater than the value that we are approving—and more time means more kill.
- Second, we assume that the water level never exceeds the water level we used when we approve the CT study. This assumption allows us to conclude that the flow rate into the unit is equal to the flow rate out of the unit. (If that were not true, the water level would continue to fall or start to rise.) The assumption allows us to base the detention time in the clearwell (and other variable-level contact basins) on the rate that water is being treated rather than the peak flow rate of the service or transfer pumps. While this assumption may underestimate the contact time in tanks where the water level falls rapidly (such as at plants with very small clearwells or very large service pumps), it gives a conservative estimate for most of the plants in Texas.

Although these assumptions are a minor inconvenience for systems that closely monitor the water level in their clearwell and storage tanks, they significantly simplify the SWMOR for the majority of plants because it is no longer necessary to determine the water volume in each treatment unit each time you collect a CT data set. By making these assumptions, we can combine Equations B-3 and B-4 to obtain:

$$T_{10\ Current} = T_{10,\ Theoretical,\ Current} \times Baffling\ Factor$$

$$= \frac{Current\ Volume}{Current\ Flow\ Rate} \times \frac{CT\ Study\ Flow\ Rate}{CT\ Study\ Volume} \times T_{10,\ CT\ Study} \qquad \text{(Equation B-5a)}$$

$$= \frac{Current\ Volume}{CT\ Study\ Volume} \times \frac{CT\ Study\ Flow\ Rate}{Current\ Flow\ Rate} \times T_{10,\ CT\ Study}$$

Since we have assumed that the Current Volume and the CT Study Volume are the same, the first term cancels out and you can calculate the actual T_{10} for any operational flow rate using Equation B-5b:

$$T_{10\ Current} = \frac{CT\ Study\ Flow\ Rate}{Current\ Flow\ Rate} \times T_{10\ CT\ Study} \qquad \text{(Equation B-5b)}$$

Although tracer tests are the best way to determine the actual contact time (T_{10}) in a basin, tracer studies are time-consuming, expensive, and difficult to conduct. Therefore, you or your engineer may have chosen to estimate the baffling factor (that is, use a theoretical baffling factor) for your basins rather than conducting an actual tracer study to determine an empirical (that is, a data-based) value.

The theoretical baffling factors that we use when reviewing CT studies are based on the baffling characteristics (that is, the design) of a basin and use data obtained from many research studies. The theoretical baffling factors that we approve are relatively conservative and may actually underestimate the T_{10} in a basin. Consequently, if your plant is using a theoretical baffling factor, you are probably providing slightly more disinfection than you think.

Table B-2. Theoretical baffling factors.

Condition	Baffling Factor	Baffling Description	Typical Unit Process
Unbaffled	0.1	None; agitated basin; high inlet and outlet flow velocities; variable water level	Clearwell or storage tank, without baffling; with no perforated inlet or outlet and with inlet and outlet submerged
Poor	0.3	Single or multiple unbaffled inlets or outlets; no intrabasin baffles	Many conventional sedimentation basins. Storage tanks with two or three baffles
Average	0.5	Baffled inlet or outlet with some intrabasin baffling	Some (few) sedimentation basins. Highly-baffled storage tanks
Superior	0.7	Perforated inlet baffle, serpentine or perforated intrabasin baffles, and outlet weir	Filters; contact tanks with serpentine baffling
Plug Flow	1	Pipeline flow	Sections of pipe 10 times longer than their diameters

A system must estimate the theoretical baffling factors for each piece of the plant in which disinfection occurs. For instance, in a length of pipe, there is plug flow. A step-dose tracer test in a pipe would show that all the material you put in comes out at the theoretical hydraulic detention time of the pipe. Therefore, the correct theoretical baffling factor to use for a pipe is 1.0. On the other hand, in a tank like an unbaffled clearwell, some of the tracer material in a step-dose test would come out almost

immediately. Because of this short-circuiting, the appropriate baffling factor for an unbaffled clearwell is 0.10.

Disinfection Zones and Effective Contact Time, T_{10}

The total T_{10} for a disinfection zone is the sum of the T_{10}s for the individual units in the zone. These individual units can include several sections of pipe, a tank or basin, or any other treatment unit that allows time for the disinfectant to work. Equation B-6 summarizes this relationship.

$$T_{10,\,Zone} = \sum_{Unit\ 1}^{Unit\ n} T_{10,\,Unit} \qquad \text{(Equation B-6)}$$

$$= T_{10,Unit\ 1} + T_{10,Unit\ 2} + \ldots + T_{10,Unit\ n}$$

Example B-1 demonstrates how you should use your CT-study-approval letter to determine T_{10} for each of your disinfection zones.

Example B-1: Determining the Total T_{10} for a Disinfection Zone

The following is an excerpt from the T_{10} Table contained in the CT-approval letter shown in Appendix A. (Footnotes have been omitted.)

Table A-1. Approved T_{10} Table for Aguaville WSC's Schwartz Surface Water Treatment Plant.

Disinfection Zone	Treatment Unit	Volume (gallons)	Flow Rate	Baffling Factor	T_{10}, Unit (min)	T_{10}, Zone (min)
D1	Raw-water line	2,800	2,000 gpm (2.880 MGD)	1.0	1.4	46.7
	Splitter box	1,800	2,000 gpm	0.1	0.1	
	Clarifiers	150,700	1,000 gpm	0.3	45.2	

From this portion of the table, you can see that:

- The T_{10} times for the raw-water line, splitter box, and clarifiers are 1.4 minutes, 0.1 minutes, and 45.2 minutes, respectively.
- The total T_{10} for Zone D1 is 1.4 + 0.1 + 45.2 = 46.7 minutes.

B.3 Submitting a Revised CT Study to the TCEQ

As noted in Section B.2, you may not make any significant change to your disinfection process without our prior written approval. In order to get your proposed change approved, you must conduct a CT study to evaluate the impact of the proposed change. The principal purpose of the CT study is to develop the new T_{10} for each zone. You may determine the T_{10} either by running a tracer study or by using theoretical baffling factors. When you send us the data for our review, you must supply all of the following information:

- a plant schematic showing disinfectant injection and monitoring points
- the dimensions (the length, width, depth, and diameter) and volume of each basin, tank, and large pipe in the disinfection zone

- the peak hourly flow rate through each disinfection zone and a justification for using that specific flow rate to determine T_{10}
- all of the empirical tracer study information if you ran a tracer test
- the baffling factor that you are proposing for each unit and the justification for using that specific baffling factor to determine T_{10}
- the T_{10} for each treatment unit and the total T_{10} for each disinfection zone

If you have no more than 10 disinfection zones, you can use the CT Study template to prepare your revised CT study. The CT Study template is an Excel spreadsheet that can be customized to fit your plant. This template has a place for you to enter all of the information mentioned above. We used the template to prepare the CT study shown in Appendix A. The appendix also contains a copy of the printout from the template for this imaginary plant.

You can download a copy of the template and its instruction manual from the TCEQ website at:

www.tceq.texas.gov/drinkingwater/swmor

or you can call us at 512-239-4691 to request a copy on a CD.

This template can be completed by the public water system staff—a professional engineer is not required. When the template is completed, copy the completed spreadsheet to a CD and just submit it with a cover letter stating the reason for the CT study revision request and the contact person who can answer any questions we may have. The template can be submitted to us at:

Technical Review and Oversight Team, MC 159
Water Supply Division
Attention: CT Study Coordinator
TCEQ
PO Box 13087
Austin, TX 78711-3087

Alternatively, you may submit documents to our physical address at:

Technical Review and Oversight Team, Building F
Water Supply Division
Attention: CT Study Coordinator
TCEQ
12100 Park 35 Circle
Austin, TX 78753

You may also send us the completed template to a special e-mail account that we have established for this purpose. If you submit the CT study electronically, please be sure to include your name, title, and telephone number in the e-mail and to attach the completed template before the e-mail is sent. The e-mail address that you should use is <CTstudy@tceq.texas.gov>.

Appendix C:
INACTIVATION CALCULATIONS

Water systems using surface water, or groundwater under the influence of surface water, must achieve a 3.0-log reduction of *Giardia lamblia* cysts and a 4.0-log reduction of viruses. Given the treatment processes for physical removal at the plant, the disinfection process is required to achieve a minimum number of log inactivations of *Giardia lamblia* cysts and viruses.

As noted in our discussion of the disinfection process on page B-8, the effectiveness of the disinfection process for inactivating *Giardia lamblia* cysts and viruses depends on five factors:

- the type of disinfectant used
- the disinfectant residual concentration
- the time the water is in contact with the disinfectant
- the water temperature
- the water pH

The best way to be sure that the plant is meeting the disinfection requirements is to calculate the CT value for the plant and compare the result to the CT required to achieve effective disinfection. The SWMOR and SWMOR2 both have built-in functions to perform these calculations.

Nevertheless, it is possible to evaluate your disinfection process using other methods. For example, you can use the CT calculator that is built into the CT Study template or you can complete the evaluation manually. To complete this evaluation manually, you must:

1. calculate the current contact time in each disinfection zone
2. calculate the CT value for each disinfection zone
3. determine the value of $CT_{required}$ for each zone
4. calculate the inactivation ratio for each zone
5. add all of the inactivation ratios

The rest of this appendix describes the process you may use to evaluate your disinfection.

IMPORTANT
The SWMOR, SWMOR2, and CT Study spreadsheets use several complex mathematical equations to determine the value of $CT_{required}$. Consequently, under certain operating conditions, the procedure described in this section will give you slightly different results than the one you will get using the spreadsheets. Although the difference between the two readings is typically less than 5%, it can have a significant impact if you are operating very close to your minimum acceptable inactivation requirements—especially the one for viruses.

C.1 Calculating the Contact Time, T_{10}, for the Current Flow Rate

Using the information from your CT-approval letter and the current flow rate through each disinfection zone, calculate T_{10}, in minutes, for each zone using Equation C-1.

$$T_{10\ Actual} = \frac{CT\ Study\ Flow\ Rate}{Actual\ Flow\ Rate} \times T_{10\ CT\ Study} \qquad \text{(Equation C-1)}$$

C.2 Calculating the CT_{ACTUAL} Values for the Current Operating Conditions

The CT value is the product of the residual concentration of a disinfectant, C, in milligrams per liter, and the contact time, T_{10}, in minutes. Using the T_{10} value you calculated above and the disinfectant residual you measured at the end of each disinfection zone, calculate the CT value for each zone using Equation C-2.

$$CT = C\ (mg/L) \times T_{10\ Actual}\ (minutes) \qquad \text{(Equation C-2)}$$

C.3 Determining the Required CT, $CT_{REQUIRED}$, for the Current Operating Conditions

To find the value of $CT_{required}$, you can use either of two methods: approximation or interpolation.

- Approximation is much easier than interpolation, requires no mathematical calculations, and produces fewer errors. Although this method is convenient, it does not give you the exact value of $CT_{required}$. Approximation somewhat underestimates the actual effectiveness of your plant's disinfection process.
- To determine the exact value of $CT_{required}$, you may use interpolation. In this method, you use a series of mathematical calculations to find CT values under conditions that fall between adjacent values in a CT table.

Interpolation is particularly useful when the disinfectant is chlorine dioxide, ozone, or chloramine. Because the CT tables for these disinfectants apply to a wide range of disinfectant concentrations and pH values, you would need to interpolate between temperature values only. In one step, you can find the exact value of $CT_{required}$ for your disinfection zone.

Using interpolation for free chlorine is much more complicated. You must interpolate for each of three factors: temperature, pH, and concentration. Finding the exact $CT_{required}$ would take you as many as seven separate interpolations! Unless you are very comfortable with math, we don't recommend that you use interpolation for free chlorine.

IMPORTANT
The SWMOR, SWMOR2, and CT Study template all use several complex mathematical equations to determine the value of $CT_{required}$. The approximation method will never give you the same $CT_{required}$ as the spreadsheets. Even if you use the interpolation method to get the more accurate $CT_{required}$ value, the result may still differ slightly from the value calculated by the spreadsheets. This discrepancy occurs because interpolation assumes a linear relationship between adjacent points on the CT tables. Unfortunately, the relationship between operating conditions and $CT_{required}$ is not truly linear.

Finding $CT_{required}$ by Approximation

Examples C-1 through C-3 show how to find the value of $CT_{required}$ using the approximation method.

Example C-1: Finding $CT_{required}$ for *Giardia lamblia* When Using Free Chlorine

Problem: Find $CT_{required}$ at 19°C, pH 7.2, and a chlorine concentration of 1.1 mg/L when a 0.5-log inactivation of *Giardia* is needed.

1. In Appendix D, find the CT tables for *Giardia* inactivation using free chlorine.

2. Find the table for the temperature that is equal to or slightly below the actual temperature of the water.
   For a temperature of 19°C, use the table for 15ºC: Table D-1.4.

3. Go to the section of this table for the pH that is equal to or slightly above the actual pH of the water.
   For a pH of 7.2, use the section for pH = 7.5.

4. Find the column for the log inactivations needed.
   This plant must achieve a 0.5-log *Giardia* inactivation, so use the "0.5-log" column.

5. Look at the far left side of the table and find the chlorine concentration that is equal to or slightly above the actual free chlorine concentration.
   In our example, the chlorine concentration is 1.1 mg/L, so use the "1.2 mg/L" row.

6. The value shown at the intersection of the concentration row and the inactivation column is the value of $CT_{required}$.
   In this example, $CT_{required}$ is 15.

Example C-2: Finding $CT_{required}$ for Viruses When Using Free Chlorine

Problem: Find $CT_{required}$ at 8°C and pH 7.2 when chlorine is used to obtain a 2.0-log inactivation of viruses.

1. Go to the CT table for viral inactivation using free chlorine (Table D-1.7).

2. Find the section of the table for the log inactivations needed.
   This plant is required to achieve a 2.0-log viral inactivation, so use one of the two columns under the 2.0-log inactivation section.

3. Go to the column for the pH range that is equal to or slightly above the actual pH of the water.
   For a pH of 7.2, use the "pH = 5.5–9.49" column.

4. Look at the far left side of the table and find the temperature that is equal to or slightly below the actual temperature of the water.
   For a temperature of 8°C, use the "5°C" row.

5. The value shown at the intersection of the temperature row and the pH column is the value of $CT_{required}$.
   In this example, $CT_{required}$ is 4.

Example C-3: Finding $CT_{required}$ When Using Chlorine Dioxide, Ozone, or Chloramine

The CT tables for chlorine dioxide, ozone, and chloramine are found in Appendix D (in Sections D-2, D-3, and D-4, respectively.) Because each of these tables has the same format, you can use the procedure described for chloramine below for any one of these three disinfectants.

Because these disinfectants are less sensitive than chlorine to the effects of pH, you will find no pH sections in these tables. Instead, each table applies to a broad pH range. Make sure the pH of the disinfection zone is within the pH range for the table you use.

Problem: Find $CT_{required}$ when using chloramine to obtain a 0.5-log inactivations of *Giardia* at 19°C.

1. Find the proper CT table for the disinfectant used in the zone. For example, use Table D-4.1 to determine the *Giardia* CT requirement when using chloramine.

2. Find the column for the temperature that is equal to or slightly below the actual temperature of the water.
   For a temperature of 19°C, use the "15°C" column.

3. Look at the far left side of the table and find the row for the required log inactivations.
   This plant is required to achieve a 0.5-log *Giardia* inactivation, so use the "0.5-log" row.

4. The value shown at the intersection of the inactivation row and the temperature column is the value of $CT_{required}$.
   In this example, $CT_{required}$ is 250.

Finding $CT_{required}$ by Interpolation

Example C-4 shows how to determine the value of $CT_{required}$ using the linear interpolation method. Since the process is identical for all of the disinfectants, Example C-4 demonstrates the process for chlorine dioxide and the target organism *Giardia lamblia*.

It should be noted, however, that using this method for free chlorine requires you to repeat this process three times; once for temperature, once for pH, and once for residual. Because of the complexity of the process for free chlorine, we recommend that you use the approximation method when working with this disinfectant.

Example C-4: Finding $CT_{required}$ for *Giardia* When Using Chlorine Dioxide

Problem: Find the exact value of $CT_{required}$ to obtain a 0.5-log inactivations of *Giardia* when using chlorine dioxide at 17°C and a pH of 7.6.

Part 1: Selecting the Table to Use for Interpolation

1. Find the proper CT table or tables for the disinfectant used in the zone.

   For this example, use Table D-2.1 to determine the *Giardia* CT requirement when using chlorine dioxide.

   Once you have found this table, make sure that the pH of the zone is within the pH range of the table. If not, no inactivation credits can be given. A pH of 7.6 is within the range of Table D-2.1 (5.5 through 9.49).

2. Find the columns for the two temperatures that are immediately above and below the actual temperature of the water.

   For example, the temperature is 17°C, so use the "15°C" and "20°C" columns.

3. Look at the far left side of the table and find the row for the required log inactivations.

   This plant is required to achieve a 0.5-log *Giardia* inactivation, so use the "0.5-log" row.

4. The value shown at the intersection of the inactivation row and the temperature columns are the $CT_{required}$ values to be used in the interpolation.

   In this example, the two $CT_{required}$ values are 3.2 and 2.5.

Part 2: Calculating $CT_{required}$ by Linear Interpolation

1. Subtract the $CT_{required}$ value for the higher temperature from the $CT_{required}$ value for the lower temperature:

   3.2 – 2.5 = 0.7

2. Subtract the lower temperature from the higher temperature:

   20 – 15 = 5

3. Divide the result of step 5 by the result of step 6:

   0.7 / 5 = 0.14

4. Subtract the actual water temperature from the higher temperature:

   20 – 17 = 3

5. Multiply the result of step 7 by the result of step 8 and round to the same number of decimal places used in the CT table you are using:

   3 × 0.14 = 0.42 (which you then round to 0.4 since the CT values for chlorine dioxide are listed to the tenths decimal place)

6. Add the result of step 9 to the $CT_{required}$ value for the higher temperature:

   2.5 + 0.4 = 2.9

This is the value of $CT_{required}$ for the actual water temperature in this plant: 17°C.

C.4 Calculating the Inactivation Ratio for Each Disinfection Zone

The inactivation ratio is a measure of how effective the disinfection has been under actual operating conditions. To find the inactivation ratio in a disinfection zone, divide the CT value achieved in that zone, or CT, by the CT value required for effective disinfection, or $CT_{required}$, as shown in Equation C-3.

$$Inactivation\ Ratio = \frac{CT_{Actual}}{CT_{Required}} \qquad \text{(Equation C-3)}$$

C.5 Determining the Total Inactivation Ratio for the Plant

To find the overall inactivation ratio for the plant, you add up the inactivation ratios of the disinfection zones in the plant. Disinfection is sufficiently effective when this overall inactivation ratio is 1.00 or greater.

$$Total\ Inactivation\ Ratio = \sum_{Zone\ D1}^{Zone\ Dn} Inactivation\ Ratio_{Zone\ Dn} \qquad \text{(Equation C-4)}$$

$$= Inactivation\ Ratio_{D1} + Inactivation\ Ratio_{D2} + \ \ldots\ + Inactivation\ Ratio_{Dn}$$

Appendix D: CT TABLES

D.1 CT TABLES FOR DISINFECTION WITH CL_2

This appendix contains the CT tables you should use when inactivating *Giardia lamblia* and viruses with free chlorine. The information used to generate these tables and the associated notes was derived from Appendixes E and F of the EPA's *Guidance Manual for Compliance with the Filtration and Disinfection Requirements for Public Water Systems Using Surface Water Sources*, Office of Drinking Water,Washington D.C., (March 1991) available at:

water.epa.gov/lawsregs/rulesregs/sdwa/swtr/upload/guidsws.pdf

Table D-1.1. CT values required for inactivation of *Giardia* cysts at 0.5°C or lower.

Chlorine Concentration (mg/L)	pH ≤ 6.0						pH = 6.5					
	Log inactivations						Log inactivations					
	0.5	1	1.5	2	2.5	3	0.5	1	1.5	2	2.5	3
≤ 0.4	23	46	69	91	114	137	27	54	82	109	136	163
0.6	24	47	71	94	118	141	28	56	84	112	140	168
0.8	24	48	73	97	121	145	29	57	86	115	143	172
1.0	25	49	74	99	123	148	29	59	88	117	147	176
1.2	25	51	76	101	127	152	30	60	90	120	150	180
1.4	26	52	78	103	129	155	31	61	92	123	153	184
1.6	26	52	79	105	131	157	32	63	95	126	158	189
1.8	27	54	81	108	135	162	32	64	97	129	161	193
2.0	28	55	83	110	138	165	33	66	99	131	164	197
2.2	28	56	85	113	141	169	34	67	101	134	168	201
2.4	29	57	86	115	143	172	34	68	103	137	171	205
2.6	29	58	88	117	146	175	35	70	105	139	174	209
2.8	30	59	89	119	148	178	36	71	107	142	178	213
≥ 3.0	30	60	91	121	151	181	36	72	109	145	181	217
Chlorine Concentration (mg/L)	**pH = 7.0**						**pH = 7.5**					
	Log inactivations						**Log inactivations**					
	0.5	**1**	**1.5**	**2**	**2.5**	**3**	**0.5**	**1**	**1.5**	**2**	**2.5**	**3**
≤ 0.4	33	65	98	130	163	195	40	79	119	158	198	237
0.6	33	67	100	133	167	200	40	80	120	159	199	239
0.8	34	68	103	137	171	205	41	82	123	164	205	246
1.0	35	70	105	140	175	210	42	84	127	169	211	253
1.2	36	72	108	143	179	215	43	86	130	173	216	259
1.4	37	74	111	147	184	221	44	89	133	177	222	266
1.6	38	75	113	151	188	226	46	91	137	182	228	273
1.8	39	77	116	154	193	231	47	93	140	186	233	279
2.0	39	79	118	157	197	236	48	95	143	191	238	286
2.2[a]	40	81	121	161	202	242	50	99	149	198	248	297
2.4	41	82	124	165	206	247	50	99	149	199	248	298
2.6	42	84	126	168	210	252	51	101	152	203	253	304
2.8	43	86	129	171	214	257	52	103	155	207	258	310
≥ 3.0	44	87	131	174	218	261	53	105	158	211	263	316

[a] The values shown in Table D-1.1 for pH = 7.5 and Cl_2 = 2.2 were precisely reproduced from the manual despite the apparent errors.

Table D-1.1 continues on the next page.

Table D-1.1—Continued

Chlorine Concentration (mg/L)	pH = 8.0						pH = 8.5					
	Log inactivations						Log inactivations					
	0.5	1	1.5	2	2.5	3	0.5	1	1.5	2	2.5	3
≤ 0.4	46	92	139	185	231	277	55	110	165	219	274	329
0.6	48	95	143	191	238	286	57	114	171	228	285	342
0.8	49	98	148	197	246	295	59	118	177	236	295	354
1.0	51	101	152	203	253	304	61	122	183	243	304	365
1.2	52	104	157	209	261	313	63	125	188	251	313	376
1.4	54	107	161	214	268	321	65	129	194	258	323	387
1.6	55	110	165	219	274	329	66	132	199	265	331	397
1.8	56	113	169	225	282	338	68	136	204	271	339	407
2.0	58	115	173	231	288	346	70	139	209	278	348	417
2.2	59	118	177	235	294	353	71	142	213	284	355	426
2.4	60	120	181	241	301	361	73	145	218	290	363	435
2.6	61	123	184	245	307	368	74	148	222	296	370	444
2.8	63	125	188	250	313	375	75	151	226	301	377	452
≥ 3.0	64	127	191	255	318	382	77	153	230	307	383	460

Chlorine Concentration (mg/L)	pH = 9.0					
	Log inactivations					
	0.5	1	1.5	2	2.5	3
≤ 0.4	65	130	195	260	325	390
0.6	68	136	204	271	339	407
0.8	70	141	211	281	352	422
1.0	73	146	219	291	364	437
1.2	75	150	226	301	376	451
1.4	77	155	232	309	387	464
1.6	80	159	239	318	398	477
1.8	82	163	245	326	408	489
2.0	83	167	250	333	417	500
2.2	85	170	256	341	426	511
2.4	87	174	261	348	435	522
2.6	89	178	267	355	444	533
2.8	91	181	272	362	453	543
≥ 3.0	92	184	276	368	460	552

Note:

No disinfection credit for *Giardia* cysts is allowed when using free chlorine if the pH within the disinfection zone is greater than 9.0.

Table D-1.2. CT values required for inactivation of *Giardia* cysts at 5°C.

Chlorine Concentration (mg/L)	pH ≤ 6.0						pH = 6.5					
	Log inactivations						Log inactivations					
	0.5	1	1.5	2	2.5	3	0.5	1	1.5	2	2.5	3
≤ 0.4	16	32	49	65	81	97	20	39	59	78	98	117
0.6	17	33	50	67	83	100	20	40	60	80	100	120
0.8	17	34	52	69	86	103	20	41	61	81	102	122
1.0	18	35	53	70	88	105	21	42	63	83	104	125
1.2	18	36	54	71	89	107	21	42	64	85	106	127
1.4	18	36	55	73	91	109	22	43	65	87	108	130
1.6	19	37	56	74	93	111	22	44	66	88	110	132
1.8	19	38	57	76	95	114	23	45	68	90	113	135
2.0	19	39	58	77	97	116	23	46	69	92	115	138
2.2	20	39	59	79	98	118	23	47	70	93	117	140
2.4	20	40	60	80	100	120	24	48	72	95	119	143
2.6	20	41	61	81	102	122	24	49	73	97	122	146
2.8	21	41	62	83	103	124	25	49	74	99	123	148
≥ 3.0	21	42	63	84	105	126	25	50	76	101	126	151
Chlorine Concentration (mg/L)	**pH = 7.0**						**pH = 7.5**					
	Log inactivations						**Log inactivations**					
	0.5	**1**	**1.5**	**2**	**2.5**	**3**	**0.5**	**1**	**1.5**	**2**	**2.5**	**3**
≤ 0.4	23	46	70	93	116	139	28	55	83	111	138	166
0.6	24	48	72	95	119	143	29	57	86	114	143	171
0.8	24	49	73	97	122	146	29	58	88	117	146	175
1.0	25	50	75	99	124	149	30	60	90	119	149	179
1.2	25	51	76	101	127	152	31	61	92	122	153	183
1.4	26	52	78	103	129	155	31	62	94	125	156	187
1.6	26	53	79	105	132	158	32	64	96	128	160	192
1.8	27	54	81	108	135	162	33	65	98	131	163	196
2.0	28	55	83	110	138	165	33	67	100	133	167	200
2.2	28	56	85	113	141	169	34	68	102	136	170	204
2.4	29	57	86	115	143	172	35	70	105	139	174	209
2.6	29	58	88	117	146	175	36	71	107	142	178	213
2.8	30	59	89	119	148	178	36	72	109	145	181	217
≥ 3.0	30	61	91	121	152	182	37	74	111	147	184	221

Table D-1.2 continues on the next page.

Table D-1.2—Continued

Chlorine Concentration (mg/L)	pH = 8.0						pH = 8.5					
	Log inactivations						Log inactivations					
	0.5	1	1.5	2	2.5	3	0.5	1	1.5	2	2.5	3
≤ 0.4	33	66	99	132	165	198	39	79	118	157	197	236
0.6	34	68	102	136	170	204	41	81	122	163	203	244
0.8	35	70	105	140	175	210	42	84	126	168	210	252
1.0	36	72	108	144	180	216	43	87	130	173	217	260
1.2	37	74	111	147	184	221	45	89	134	178	223	267
1.4	38	76	114	151	189	227	46	91	137	183	228	274
1.6	39	77	116	155	193	232	47	94	141	187	234	281
1.8	40	79	119	159	198	238	48	96	144	191	239	287
2.0	41	81	122	162	203	243	49	98	147	196	245	294
2.2	41	83	124	165	207	248	50	100	150	200	250	300
2.4	42	84	127	169	211	253	51	102	153	204	255	306
2.6	43	86	129	172	215	258	52	104	156	208	260	312
2.8	44	88	132	175	219	263	53	106	159	212	265	318
≥ 3.0	45	89	134	179	223	268	54	108	162	216	270	324

Chlorine Concentration (mg/L)	pH = 9.0					
	Log inactivations					
	0.5	1	1.5	2	2.5	3
≤ 0.4	47	93	140	186	233	279
0.6	49	97	146	194	243	291
0.8	50	100	151	201	251	301
1.0	52	104	156	208	260	312
1.2	53	107	160	213	267	320
1.4	55	110	165	219	274	329
1.6	56	112	169	225	281	337
1.8	58	115	173	230	288	345
2.0	59	118	177	235	294	353
2.2	60	120	181	241	301	361
2.4	61	123	184	245	307	368
2.6	63	125	188	250	313	375
2.8	64	127	191	255	318	382
≥ 3.0	65	130	195	259	324	389

Note:

No disinfection credit for *Giardia* cysts is allowed when using free chlorine if the pH within the disinfection zone is greater than 9.0.

Table D-1.3. CT values required for inactivation of *Giardia* cysts at 10°C.

Chlorine Concentration (mg/L)	pH ≤ 6.0						pH = 6.5					
	Log inactivations						Log inactivations					
	0.5	1	1.5	2	2.5	3	0.5	1	1.5	2	2.5	3
≤ 0.4	12	24	37	49	61	73	15	29	44	59	73	88
0.6	13	25	38	50	63	75	15	30	45	60	75	90
0.8	13	26	39	52	65	78	15	31	46	61	77	92
1.0	13	26	40	53	66	79	16	31	47	63	78	94
1.2	13	27	40	53	67	80	16	32	48	63	79	95
1.4	14	27	41	55	68	82	16	33	49	65	82	98
1.6	14	28	42	55	69	83	17	33	50	66	83	99
1.8	14	29	43	57	72	86	17	34	51	67	84	101
2.0	15	29	44	58	73	87	17	35	52	69	87	104
2.2	15	30	45	59	74	89	18	35	53	70	88	105
2.4	15	30	45	60	75	90	18	36	54	71	89	107
2.6	15	31	46	61	77	92	18	37	55	73	98	110
2.8	16	31	47	62	78	93	19	37	56	74	93	111
≥ 3.0	16	32	48	63	79	95	19	38	57	75	94	113
Chlorine Concentration (mg/L)	**pH = 7.0**						**pH = 7.5**					
	Log inactivations						**Log inactivations**					
	0.5	**1**	**1.5**	**2**	**2.5**	**3**	**0.5**	**1**	**1.5**	**2**	**2.5**	**3**
≤ 0.4	17	35	52	69	87	104	21	42	63	83	104	125
0.6	18	36	54	71	89	107	21	43	64	85	107	128
0.8	18	37	55	73	92	110	22	44	66	87	109	131
1.0	19	37	56	75	93	112	22	45	67	89	112	134
1.2	19	38	57	76	95	114	23	46	69	91	114	137
1.4	19	39	58	77	97	116	23	47	70	93	117	140
1.6	20	40	60	79	99	119	24	48	72	96	120	144
1.8	20	41	61	81	102	122	25	49	74	98	123	147
2.0	21	41	62	83	103	124	25	50	75	100	125	150
2.2	21	42	64	85	106	127	26	51	77	102	128	153
2.4	22	43	65	86	108	129	26	52	79	105	131	157
2.6	22	44	66	87	109	131	27	53	80	107	133	160
2.8	22	45	67	89	112	134	27	54	82	109	136	163
≥ 3.0	23	46	69	91	114	137	28	55	83	111	138	166

Table D-1.3 continues on the next page.

Table D-1.3—Continued

Chlorine Concentration (mg/L)	pH = 8.0						pH = 8.5					
	Log inactivations						Log inactivations					
	0.5	1	1.5	2	2.5	3	0.5	1	1.5	2	2.5	3
≤ 0.4	25	50	75	99	124	149	30	59	89	118	148	177
0.6	26	51	77	102	128	153	31	61	92	122	153	183
0.8	26	53	79	105	132	158	32	63	95	126	158	189
1.0	27	54	81	108	135	162	33	65	98	130	163	195
1.2	28	55	83	111	138	166	33	67	100	133	167	200
1.4	28	57	85	113	142	170	34	69	103	137	172	206
1.6	29	58	87	116	145	174	35	70	106	141	176	211
1.8	30	60	90	119	149	179	36	72	108	143	179	215
2.0	30	61	91	121	152	182	37	74	111	147	184	221
2.2	31	62	93	124	155	186	38	75	133	150	188	225
2.4	32	63	95	127	158	190	38	77	115	153	192	230
2.6	32	65	97	129	162	194	39	78	117	156	195	234
2.8	33	66	99	131	164	197	40	80	120	159	199	239
≥ 3.0	34	67	101	134	168	201	41	81	122	162	203	243

Chlorine Concentration (mg/L)	pH = 9.0					
	Log inactivations					
	0.5	1	1.5	2	2.5	3
≤0.4	35	70	105	139	174	209
0.6	36	73	109	145	182	218
0.8	38	75	133	151	188	226
1.0	39	78	117	156	195	234
1.2	40	80	120	160	200	240
1.4	41	82	124	165	206	247
1.6	42	84	127	169	211	253
1.8	43	86	130	173	216	259
2.0	44	88	133	177	221	265
2.2	45	90	136	181	226	271
2.4	46	92	138	184	230	276
2.6	47	94	141	187	234	281
2.8	48	96	144	181	239	287
≥ 3.0	49	97	146	195	243	292

Note:

No disinfection credit for *Giardia* cysts is allowed when using free chlorine if the pH within the disinfection zone is greater than 9.0.

Table D-1.4. CT values required for inactivation of *Giardia* cysts at 15°C.

Chlorine Concentration (mg/L)	pH ≤ 6.0						pH = 6.5					
	Log inactivations						Log inactivations					
	0.5	1	1.5	2	2.5	3	0.5	1	1.5	2	2.5	3
≤ 0.4	8	16	25	33	41	49	10	20	30	39	49	59
0.6	8	17	25	33	42	50	10	20	30	40	50	60
0.8	9	17	26	35	43	52	10	20	31	41	51	61
1.0	9	18	27	35	44	53	11	21	32	42	53	63
1.2	9	18	27	36	45	54	11	21	32	43	53	64
1.4	9	18	28	37	46	55	11	22	33	43	54	65
1.6	9	19	28	37	47	56	11	22	33	44	55	66
1.8	10	19	29	38	48	57	11	23	34	45	57	68
2.0	10	19	29	39	48	58	12	23	35	46	58	69
2.2	10	20	30	39	49	59	12	23	35	47	58	70
2.4	10	20	30	40	50	60	12	24	36	48	60	72
2.6	10	20	31	41	51	61	12	24	37	49	61	73
2.8	10	21	31	41	52	62	12	25	37	49	62	74
≥ 3.0	11	21	32	42	53	63	13	25	38	51	63	76
Chlorine Concentration (mg/L)	**pH = 7.0**						**pH = 7.5**					
	Log inactivations						**Log inactivations**					
	0.5	**1**	**1.5**	**2**	**2.5**	**3**	**0.5**	**1**	**1.5**	**2**	**2.5**	**3**
≤ 0.4	12	23	35	47	58	70	14	28	42	55	69	83
0.6	12	24	36	48	60	72	14	29	43	57	72	86
0.8	12	24	37	49	61	73	15	29	44	59	73	88
1.0	13	25	38	50	63	75	15	30	45	60	75	90
1.2	13	25	38	51	63	76	15	31	46	61	77	92
1.4	13	26	39	52	65	78	16	31	47	63	78	94
1.6	13	26	40	53	66	79	16	32	48	64	80	96
1.8	14	27	41	54	68	81	16	33	49	65	82	98
2.0	14	28	42	55	69	83	17	33	50	67	83	100
2.2	14	28	53	57	71	85	17	34	51	68	85	102
2.4	14	29	43	57	72	86	18	35	53	70	88	105
2.6	15	29	44	59	73	88	18	36	54	71	89	107
2.8	15	30	45	59	74	89	18	36	55	73	91	109
≥ 3.0	15	30	46	61	76	91	19	37	56	74	93	111

Table D-1.4 continues on the next page.

Table D-1.4—Continued

Chlorine Concentration (mg/L)	pH = 8.0						pH = 8.5					
	Log inactivations						Log inactivations					
	0.5	1	1.5	2	2.5	3	0.5	1	1.5	2	2.5	3
≤ 0.4	17	33	50	66	83	99	20	39	59	79	98	118
0.6	17	34	51	68	85	102	20	41	61	81	102	122
0.8	18	35	53	70	88	105	21	42	63	84	105	126
1.0	18	36	54	72	90	108	22	43	65	87	108	130
1.2	19	37	56	74	93	111	22	45	67	89	112	134
1.4	19	38	57	76	95	114	23	46	69	91	114	137
1.6	19	39	58	77	97	116	24	47	71	94	118	141
1.8	20	40	60	79	99	119	24	48	72	96	120	144
2.0	20	41	61	81	102	122	25	49	74	98	123	147
2.2	21	41	62	83	103	124	25	50	75	100	125	150
2.4	21	42	64	85	106	127	26	51	77	102	128	153
2.6	22	43	65	86	108	129	26	52	78	104	130	156
2.8	22	44	66	88	110	132	27	53	80	106	133	159
≥ 3.0	22	45	67	89	112	134	27	54	81	108	135	162

Chlorine Concentration (mg/L)	pH = 9.0					
	Log inactivations					
	0.5	1	1.5	2	2.5	3
≤ 0.4	23	47	70	93	117	140
0.6	24	49	73	97	122	146
0.8	25	50	76	101	126	151
1.0	26	52	78	104	130	156
1.2	27	53	80	107	133	160
1.4	28	55	83	110	138	165
1.6	28	56	82	133	141	169
1.8	29	58	87	115	144	173
2.0	30	59	89	118	148	177
2.2	30	60	91	121	151	181
2.4	31	61	92	123	153	184
2.6	31	63	94	125	157	188
2.8	32	64	96	127	159	191
≥ 3.0	33	65	98	130	163	195

Note:

No disinfection credit for *Giardia* cysts is allowed when using free chlorine if the pH within the disinfection zone is greater than 9.0.

Table D-1.5. CT values required for inactivation of *Giardia* cysts at 20°C.

Chlorine Concentration (mg/L)	pH ≤ 6.0						pH = 6.5					
	Log inactivations						Log inactivations					
	0.5	1	1.5	2	2.5	3	0.5	1	1.5	2	2.5	3
≤ 0.4	6	12	18	24	30	36	7	15	22	29	37	44
0.6	6	13	19	25	32	38	8	15	23	30	38	45
0.8	7	13	20	26	33	39	8	15	23	31	38	46
1.0	7	13	20	26	33	39	8	16	24	31	39	47
1.2	7	13	20	27	33	40	8	16	24	32	40	48
1.4	7	14	21	27	34	41	8	16	25	33	41	49
1.6	7	14	21	28	35	42	8	17	25	33	42	50
1.8	7	14	22	29	36	43	9	17	26	34	43	51
2.0	7	15	22	29	37	44	9	17	26	35	43	52
2.2	7	15	22	29	37	44	9	18	27	35	44	53
2.4	8	15	23	30	38	45	9	18	27	36	45	54
2.6	8	15	23	31	38	46	9	18	28	38	46	55
2.8	8	16	24	31	39	47	9	19	28	37	47	56
≥ 3.0	8	16	24	31	39	47	10	19	29	38	48	57
Chlorine Concentration (mg/L)	**pH = 7.0**						**pH = 7.5**					
	Log inactivations						**Log inactivations**					
	0.5	**1**	**1.5**	**2**	**2.5**	**3**	**0.5**	**1**	**1.5**	**2**	**2.5**	**3**
≤ 0.4	9	17	26	35	43	52	10	21	31	41	52	62
0.6	9	18	27	36	45	54	11	21	32	43	53	64
0.8	9	18	28	37	46	55	11	22	33	44	55	66
1.0	9	19	28	37	47	56	11	22	34	45	56	67
1.2	10	19	29	38	48	57	12	23	35	46	58	69
1.4	10	19	29	39	48	58	12	23	35	47	58	70
1.6	10	20	30	39	49	59	12	24	36	48	60	72
1.8	10	20	31	41	51	61	12	25	37	49	62	74
2.0	10	21	31	41	52	62	13	25	38	50	63	75
2.2	11	21	32	42	53	63	13	26	39	51	64	77
2.4	11	22	33	43	54	65	13	26	39	52	65	78
2.6	11	22	33	44	55	66	13	27	40	53	67	80
2.8	11	22	34	45	56	67	14	27	41	54	68	81
≥ 3.0	11	23	34	45	57	68	14	28	42	55	69	83

Table D-1.5 continues on the next page.

Table D-1.5—Continued

Chlorine Concentration (mg/L)	pH = 8.0						pH = 8.5					
	Log inactivations						Log inactivations					
	0.5	1	1.5	2	2.5	3	0.5	1	1.5	2	2.5	3
≤ 0.4	12	25	37	49	62	74	15	30	45	59	74	89
0.6	13	26	39	51	64	77	15	31	46	61	77	92
0.8	13	26	40	53	66	79	16	32	48	63	79	95
1.0	14	27	41	54	68	81	16	33	49	65	82	98
1.2	14	28	42	55	69	83	17	33	50	67	83	100
1.4	14	28	43	57	71	85	17	34	52	69	86	103
1.6	15	27	44	58	73	87	18	35	53	70	88	105
1.8	15	30	45	59	74	89	18	36	54	72	90	108
2.0	15	30	46	61	76	91	18	37	55	73	92	110
2.2	16	31	47	62	78	93	19	38	57	75	94	113
2.4	16	32	48	63	79	95	19	38	58	77	96	115
2.6	16	32	49	65	81	97	20	39	59	78	98	117
2.8	17	33	50	66	83	99	20	40	60	79	99	119
≥ 3.0	17	34	51	67	84	101	20	41	61	81	102	122

Chlorine Concentration (mg/L)	pH = 9.0					
	Log inactivations					
	0.5	1	1.5	2	2.5	3
≤ 0.4	18	35	53	70	88	105
0.6	18	36	55	73	91	109
0.8	19	38	57	75	94	113
1.0	20	39	59	78	98	117
1.2	20	40	60	80	100	120
1.4	21	41	62	82	103	123
1.6	21	42	63	84	105	126
1.8	22	43	65	86	108	129
2.0	22	44	66	88	110	132
2.2	23	45	68	90	113	135
2.4	23	46	69	92	115	138
2.6	24	47	71	94	118	141
2.8	24	48	72	95	119	143
≥ 3.0	24	49	73	97	122	146

Note:

No disinfection credit for *Giardia* cysts is allowed when using free chlorine if the pH within the disinfection zone is greater than 9.0.

Table D-1.6. CT values required for inactivation of *Giardia* cysts at 25°C.[a]

Chlorine Concentration (mg/L)	pH ≤ 6.0						pH = 6.5					
	Log inactivations						Log inactivations					
	0.5	1	1.5	2	2.5	3	0.5	1	1.5	2	2.5	3
≤ 0.4	4	8	12	16	20	24	5	10	15	19	24	29
0.6	4	8	13	17	21	25	5	10	15	20	25	30
0.8	4	9	13	17	22	26	5	10	16	21	26	31
1.0	4	9	13	17	22	26	5	10	16	21	26	31
1.2	5	9	14	18	23	27	5	11	16	21	27	32
1.4	5	9	14	18	23	27	6	11	17	22	28	33
1.6	5	9	14	19	23	28	6	11	17	22	28	33
1.8	5	10	15	19	24	29	6	11	17	23	28	34
2.0	5	10	15	19	24	29	6	12	18	23	29	35
2.2	5	10	15	20	25	30	6	12	18	23	29	35
2.4	5	10	15	20	25	30	6	12	18	24	30	36
2.6	5	10	16	21	26	31	6	12	19	25	31	37
2.8	5	10	16	21	26	31	6	12	19	25	31	37
≥ 3.0	5	11	16	21	27	32	6	13	19	25	32	38
Chlorine Concentration (mg/L)	**pH = 7.0**						**pH = 7.5**					
	Log inactivations						**Log inactivations**					
	0.5	**1**	**1.5**	**2**	**2.5**	**3**	**0.5**	**1**	**1.5**	**2**	**2.5**	**3**
≤ 0.4	6	12	18	23	29	35	7	14	21	28	35	42
0.6	6	12	18	24	30	36	7	14	22	29	36	43
0.8	6	12	19	25	31	37	7	15	22	29	37	44
1.0	6	12	19	25	31	37	8	15	23	30	38	45
1.2	6	13	19	25	32	38	8	15	23	31	38	46
1.4	7	13	20	26	33	39	8	16	24	31	39	47
1.6	7	13	20	27	33	40	8	16	24	32	40	48
1.8	7	14	21	27	34	41	8	16	25	33	41	49
2.0	7	14	21	27	34	41	8	17	25	33	42	50
2.2	7	14	21	28	35	42	9	17	26	34	43	51
2.4	7	14	22	29	36	43	9	17	26	35	43	52
2.6	7	15	22	29	37	44	9	18	27	35	44	53
2.8	8	15	23	30	38	45	9	18	27	36	45	54
≥ 3.0	8	15	23	31	38	46	9	18	28	37	46	55

[a] For temperatures above 25°C, $CT_{required}$ drops by a factor of two for each 10°C rise in temperature—that is, the $CT_{required}$ at 30°C is one-half the $CT_{required}$ at 20°C.

Table D-1.6 continues on the next page.

Table D1.6—continued

Chlorine Concentration (mg/L)	pH = 8.0						pH = 8.5					
	Log inactivations						Log inactivations					
	0.5	1	1.5	2	2.5	3	0.5	1	1.5	2	2.5	3
≤°0.4	8	17	25	33	42	50	10	20	30	39	49	59
0.6	9	17	26	34	43	51	10	20	31	41	51	61
0.8	9	18	27	35	44	53	11	21	32	42	53	63
1.0	9	18	27	36	45	54	11	22	33	43	54	65
1.2	9	18	28	37	46	55	11	22	34	45	56	67
1.4	10	19	29	38	48	57	12	23	35	46	58	69
1.6	10	19	29	39	48	58	12	23	35	47	58	70
1.8	10	20	30	40	50	60	12	24	36	48	60	72
2.0	10	20	31	41	51	61	12	25	37	49	62	74
2.2	10	21	31	41	52	62	13	25	38	50	63	75
2.4	11	21	32	42	53	63	13	26	39	51	64	77
2.6	11	22	33	43	54	65	13	26	39	52	65	78
2.8	11	22	33	44	55	66	13	27	40	53	67	80
≥ 3.0	11	22	34	45	56	67	14	27	41	54	68	81

Chlorine Concentration (mg/L)	pH = 9.0					
	Log inactivations					
	0.5	1	1.5	2	2.5	3
≤°0.4	12	23	35	47	58	70
0.6	12	24	37	49	61	73
0.8	13	25	38	50	63	75
1.0	13	26	39	52	65	78
1.2	13	27	40	53	67	80
1.4	14	27	41	55	68	82
1.6	14	28	42	56	70	84
1.8	14	29	43	57	72	86
2.0	15	29	44	59	73	88
2.2	15	30	45	60	75	90
2.4	15	31	46	61	77	92
2.6	16	31	47	63	78	94
2.8	16	32	48	64	80	96
≥ 3.0	16	32	49	65	81	97

Note:

No disinfection credit for *Giardia* cysts is allowed when using free chlorine if the pH within the disinfection zone is greater than 9.0.

Table D-1.7. CT values required for inactivation of viruses.[a,b]

	Log inactivations					
	2		3		4	
	pH		pH		pH	
Temperature	**5.5–9.49**	**9.5–10.49**	**5.5–9.49**	**9.5–10.49**	**5.5–9.49**	**9.5–10.49**
0.5°C	6	45	9	66	12	90
5°C	4	30	6	44	8	60
10°C	3	22	4	33	6	45
15°C	2	15	3	22	4	30
20°C	1	11	2	16	3	22
25°C	1	7	1	11	2	15

[a] No disinfection credit is allowed for pH above 10.49.

[b] For temperatures above 25°C, $CT_{required}$ drops by a factor of two for each 10°C rise in temperature—that is, the $CT_{required}$ at 30°C is one-half the $CT_{required}$ at 20°C.

D.2 CT TABLES FOR DISINFECTION WITH CLO_2

This appendix contains the CT tables you should use when inactivating *Giardia lamblia* and viruses with chlorine dioxide. The information used to generate these tables and the associated notes was derived from Appendixes E and F of the EPA's *Guidance Manual for Compliance with the Filtration and Disinfection Requirements for Public Water Systems Using Surface Water Sources*, Office of Drinking Water, Washington (March 1991), available at:

water.epa.gov/lawsregs/rulesregs/sdwa/swtr/upload/guidsws.pdf

Table D-2.1. CT values required for inactivation of *Giardia* cysts at pH between 6.0 and 9.49.[a]

	Temperature (°C)					
Inactivation	**≤ 1**	**5**	**10**	**15**	**20**	**25**
0.5-log	10.0	4.3	4.0	3.2	2.5	2.0
1.0-log	21.0	8.7	7.7	6.3	5.0	3.7
1.5-log	32.0	13.0	12.0	10.0	7.5	5.5
2.0-log	42.0	17.0	15.0	13.0	10.0	7.3
2.5-log	52.0	22.0	19.0	16.0	13.0	9.0
3.0-log	63.0	26.0	23.0	19.0	15.0	11.0

[a] No disinfection credit is allowed for pH above 9.49.

Table D-2.2. CT values required for inactivation of viruses at pH between 6.0 and 9.49.[a,b]

	Temperature (°C)					
Inactivation	**≤ 1**	**5**	**10**	**15**	**20**	**25**
2-log	8.4	5.6	4.2	2.8	2.1	1.4
3-log	25.6	17.1	12.8	8.6	6.4	4.3
4-log	50.1	33.4	25.1	16.7	12.5	8.4

[a] No disinfection credit is allowed for pH above 9.49.

[b] For temperatures above 25°C, $CT_{required}$ drops by a factor of two for each 10°C rise in temperature—that is, the $CT_{required}$ at 30°C is one-half the $CT_{required}$ at 20°C.

D.3 CT TABLES FOR DISINFECTION WITH O_3

This appendix contains the CT tables you should use when inactivating *Giardia lamblia* and viruses with ozone. The information used to generate these tables and the associated notes was derived from Appendixes E and F of the EPA's *Guidance Manual for Compliance with the Filtration and Disinfection Requirements for Public Water Systems Using Surface Water Sources*, Office of Drinking Water, Washington (March 1991), available at:

water.epa.gov/lawsregs/rulesregs/sdwa/swtr/upload/guidsws.pdf

Table D-3.1. CT values required for inactivation of *Giardia* cysts at pH between 6.0 and 9.49.[a,b]

	Temperature (ºC)					
Inactivation	**≤ 1**	**5**	**10**	**15**	**20**	**25**
0.5-log	0.48	0.32	0.23	0.16	0.12	0.08
1.0-log	0.97	0.63	0.48	0.32	0.24	0.16
1.5-log	1.50	0.95	0.72	0.48	0.36	0.24
2.0-log	1.90	1.30	0.95	0.63	0.48	0.32
2.5-log	2.40	1.60	1.20	0.79	0.60	0.40
3.0-log	2.90	1.90	1.43	0.95	0.72	0.48

[a] No disinfection credit is allowed for pH above 9.49.

[b] For temperatures above 25°C, $CT_{required}$ drops by a factor of two for each 10°C rise in temperature—that is, the $CT_{required}$ at 30°C is one-half the $CT_{required}$ at 20°C.

Table D-3.2. CT values required for inactivation of viruses at pH between 6.0 and 9.49.[a,b]

	Temperature (ºC)					
Inactivation	**≤ 1**	**5**	**10**	**15**	**20**	**25**
2-log	0.90	0.60	0.50	0.30	0.25	0.15
3-log	1.40	0.90	0.80	0.50	0.40	0.25
3-log	1.80	1.20	1.00	0.60	0.50	0.30

[a] No disinfection credit is allowed for pH above 9.49.

[b] For temperatures above 25°C, $CT_{required}$ drops by a factor of two for each 10°C rise in temperature—that is, the $CT_{required}$ at 30°C is one-half the $CT_{required}$ at 20°C.

D.4 CT TABLES FOR NH_2CL (CHLORAMINES)

This appendix contains the CT tables you should use when inactivating *Giardia lamblia* and viruses with chloramine. The information used to generate these tables and the associated notes was derived from Appendixes E and F of the EPA's *Guidance Manual for Compliance with the Filtration and Disinfection Requirements for Public Water Systems Using Surface Water Sources*, Office of Drinking Water, Washington (March 1991), available at:

water.epa.gov/lawsregs/rulesregs/sdwa/swtr/upload/guidsws.pdf

Table D-4.1. CT values required for inactivation of *Giardia* cysts at pH between 6.0 and 9.49.[a,b]

	Temperature (ºC)					
Inactivation	**≤ 1**	**5**	**10**	**15**	**20**	**25 ≥**
0.5-log	635	365	310	250	185	125
1.0-log	1270	735	615	500	370	250
1.5-log	1900	1100	930	750	550	375
2.0-log	2535	1470	1230	1000	735	500
2.5-log	3170	1830	1540	1250	915	625
3.0-log	3800	2200	1850	1500	1100	750

[a] Table D-4.1 applies only if a well-mixed chlorine residual is present prior to the application of ammonia in the treatment process.
[b] No disinfection credit is allowed for pH above 9.49.

Table D-4.2. CT values required for inactivation of viruses at pH between 6.0 and 9.49.[a,b,c]

	Temperature (ºC)					
Inactivation	**≤ 1**	**5**	**10**	**15**	**20**	**25**
2-log	1245	857	643	428	321	214
3-log	2063	1423	1067	712	534	356
4-log	2883	1988	1491	994	746	497

[a] Table D-4.2 applies only if a well-mixed chlorine residual is present prior to the application of ammonia in the treatment process.
[b] No disinfection credit is allowed for pH above 9.49.
[c] For temperatures above 25°C, $CT_{required}$ drops by a factor of two for each 10°C rise in temperature—that is, the $CT_{required}$ at 30°C is one-half the $CT_{required}$ at 20°C.

Appendix E:
EXAMPLE OF A COMPLETED SWMOR

SURFACE WATER MONTHLY OPERATING REPORT

FOR PUBLIC WATER SYSTEMS THAT ARE USING SURFACE WATER SOURCES
OR GROUND WATER SOURCES UNDER THE INFLUENCE OF SURFACE WATER

Summary Page

PUBLIC WATER SYSTEM NAME: Aguaville PWS

PLANT NAME OR NUMBER: Schwartz Plant

I certify that I am familiar with the information contained in this report and that, to the best of my knowledge, the information is true, complete, and accurate.

PWS ID No.: 1234567

Operator's Signature: Hardy Worker

Report for the Month of: February 2011

Certificate No. & Grade: WS1234567, BS

Date: March 9, 2011

TREATMENT PLANT PERFORMANCE

Total number of turbidity readings:	133	Number of 4-hour periods when plant was off-line:	34
Number of readings above 0.10 NTU:	114	Number of 4-hour periods when plant was on-line but turbidity data was not collected:	1
Number of readings above 0.3 NTU:	5		
Number of readings above 0.5 NTU:	3	Number of days when plant was on-line but individual filter turbidity data was not collected:	1
Number of readings above 1.0 NTU:	2		
Maximum allowable turbidity level:	0.3	Number of days with readings above 1.0 NTU:	1 (2)
Percentage of readings above this limit:	3.8 % (1)	Number of days with readings above 5.0 NTU:	0 (3)

Statistical Summary				
Maximum turbidity reading:	1.17 NTU	Average turbidity value:	0.23 NTU
Minimum turbidity reading:	0.03 NTU	Standard deviation:	0.149 NTU
CFE 95th percentile value:	0.34 NTU	IFE 95th percentile:	0.484 NTU

Number of days with a low CT for no more than 4.0 consecutive hours:	1	Average log inactivation for Giardia:	3.26
		Average log inactivation for viruses:	61.43
Number of days with a low CT for more than 4.0 consecutive hours:	0 (4)	Number of days when profiling data was not collected:	1
		Number of days when CT data was not collected:	0

Minimum disinfectant residual required leaving the plant:		0.5 mg/L, measured as Total Chlorine	
Number of days with a low residual for no more than 4.0 consecutive hours:	1		
Number of days with a low residual for more than 4.0 consecutive hours:	0 (5)	Number of days when disinfectant residual leaving the plant was not properly monitored:	1

DISTRIBUTION SYSTEM

Minimum disinfectant residual required in distribution system:		0.5 mg/L, measured as Total Chlorine	
Total number of readings this month:	116 (at least 28 required) (8)		
Average disinfectant residual value:	2.12	Percentage of readings with a low residual this month:	2.6 % (6A)
Number of readings with a low residual:	3		
Number of readings with no detectable residual:	1	Percentage of readings with a low residual last month:	1.4 % (6B)

ADDITIONAL REPORTS & WORKSHEETS

The Page 1 Addendum (Public Notices) is required because there was at least one treatment technique or monitoring/reporting violation reported.

Additional report(s) for individual filter monitoring required:	○ NONE	● Filter Profile	● Filter Assessment	○ CPE
Additional report(s) for individual filter monitoring submitted:	● NONE	○ Filter Profile (9)	○ Filter Assessment (10)	○ CPE (11)

Additional IFE Reports are required this month.

SURFACE WATER MONTHLY OPERATING REPORT
TEXAS COMMISSION ON ENVIRONMENTAL QUALITY
WATER SUPPLY DIVISION/PUBLIC DRINKING WATER SECTION (MC-155)
P.O. BOX 13087, AUSTIN, TEXAS 78711-3087

TCEQ - 0102C (07-19-10, Excel 2007) PAGE 1 SWMOR

SURFACE WATER MONTHLY OPERATING REPORT

FOR PUBLIC WATER SYSTEMS THAT ARE USING SURFACE WATER SOURCES
OR GROUND WATER SOURCES UNDER THE INFLUENCE OF SURFACE WATER (cont.)
Summary Page Addendum (Violations and Public Notices)

PUBLIC WATER SYSTEM NAME: Aguaville PWS

PLANT NAME OR NUMBER: Schwartz Plant

PWS ID No.: 1234567

Month: February

Year: 2011

PUBLIC NOTICES

VIOLATION TYPE	DESCRIPTION OF VIOLATION	VIOLATION OCCURRED?	NOTICE TO TCEQ ■ DATE OF NOTICE	NOTICE TO CUSTOMER * DATE OF NOTICE	NOTICE TO CUSTOMER * PENDING	VIOLATION DATES
TREATMENT TECHNIQUE	Were more than 5.0% of the turbidity readings above the acceptable level? - see (1) on the *Summary Page*	No				
	Were there any days with turbidity readings above 1.0 NTU? - see (2) on the *Summary Page*	Yes	02/05/11		YES	4,
	Were there any days with turbidity readings above 5.0 NTU? - see (3) on the *Summary Page*	No				
	Were there any periods when the plant failed to meet the CT requirements for more than 4.0 consecutive hours? - see (4) on the *Summary Page*	No				
	Were there any periods when the residuals leaving the plant fell below the acceptable level for more than 4.0 consecutive hours? - see (5) on the *Summary Page*	No				
	Were more than 5.0% of the residuals in the distribution system below the acceptable level for two months in a row? - see (6A) and (6B) on the *Summary Page*	No				
MONITORING & REPORTING	Were there any days when the plant failed to report all of the required Combined Filter Effluent (CFE) turbidity readings? - see the *Turbidity Data Page*	Yes	03/09/11		YES	1,
	Were there any days when the plant failed to report all the CT data needed to evaluate the level of microbial inactivation achieved? - see the *Disinfection Data Page*	No				
	Were there any days when the plant failed to report the minimum disinfectant residual entering the distribution system? - see the *Turbidity Data Page*	Yes	03/09/11		YES	18,
	Did the system fail to collect enough samples in the distribution system to meet the minimum disinfectant monitoring requirements? - see (8) on the *Summary Page*	No				
	Were there any days when the plant failed to report the maximum individual filter effluent (IFE) turbidity level produced by each filter? - see the *Filter Data Page*	Yes	03/09/11		YES	12,
	Were there any days when the plant failed to report the IFE turbidity level 4-hours after beginning a filter run? - see the *Filter Data Page*	Yes	03/09/11		YES	12,
	Did the plant fail to submit a Filter Profile Report if one was required? - see (9) on the *Summary page*	Yes	03/09/11		YES	February 2011
	Did the plant fail to submit a Filter Assessment Report if one was required? - see (10) on the *Summary Page*	Yes	03/09/11		YES	February 2011
	Did the plant fail to submit a Comprehensive Performance Evaluation Request if one was required? - see (11) on the *Summary Page*	No				
	Did the plant fail to collect at least one Total Organic Carbon sample set? - *see TOCMOR Page*	No				

■ Treatment technique violation notices are due no later than the end of the next business day. Please include a copy if possible.
* Copies of each Public Notice must accompany this report if they have already been issued.

SUMITTED BY: *Hardy Worker*

Certificate No. and Grade: WS1234567, BS

Date: March 9, 2011

TCEQ - 0102C (11-10-09) PAGE 1 - Addendum SWMOR

SURFACE WATER MONTHLY OPERATING REPORT

FOR PUBLIC WATER SYSTEMS THAT ARE USING SURFACE WATER SOURCES OR GROUND WATER SOURCES UNDER THE INFLUENCE OF SURFACE WATER (cont.)

Turbidity Data Page

PUBLIC WATER SYSTEM NAME: Aguaville PWS

PLANT NAME OR NUMBER: Schwartz Plant

PWS ID No.: 1234567

Connections: 4,321

Month: February **Year:** 2011

Population: 13,500

PERFORMANCE DATA

Date	Raw Water Pumpage (MGD)	Treated Water Pumpage (MGD)	RAW WATER ANALYSES NTU	RAW WATER ANALYSES Alk.	SETTLED WATER TURBIDITY (Optional Data) Basin No. 1	2	3	4	5	6	FINISHED WATER QUALITY Turbidity NTU1	NTU2	NTU3	NTU4	NTU5	NTU6	Lowest Residual	Time*
1	1.411	1.322	49	52	2.4	1.9					X	0.19	0.07	0.03	0.31	ND	2.4	
2	1.484	1.444	26	68	2.8	1.8					X	0.33	0.24	0.27	0.15	0.12	3.4	
3	1.598	1.511	12	59	2.1	2.2					X	0.23	0.08	0.12	0.17	0.26	3.1	
4	1.154	1.084	80	92	5.2	4.3					X	0.34	0.46	0.78	1.06	1.17	2.3	
5	0.000	0.889	X	X	X	X					X	X	X	X	X	X	1.1	
6	2.650	1.103	15	61	1.8	1.4					X	X	0.26	0.32	0.21	0.10	2.8	
7	1.302	1.239	73	55	2.3	2.0					X	0.13	0.28	0.38	0.34	0.30	3.0	
8	1.337	1.280	10	47	1.7	1.9					X	0.27	0.24	0.17	0.19	0.04	2.7	
9	1.701	1.687	24	53	1.9	1.6					X	0.24	0.32	0.25	0.18	0.12	0.3	0.75
10	1.408	1.397	16	44	1.2	1.1					X	0.04	0.08	0.07	0.21	0.11	1.9	
11	1.457	1.402	70	62	1.8	1.5					X	0.33	0.06	0.20	0.23	0.34	2.2	
12	1.537	1.522	98	43	3.2	2.3					X	0.29	0.08	0.16	0.14	0.27	3.1	
13	1.092	1.084	16	57	2.2	1.8					X	0.33	0.28	0.10	0.27	0.29	2.0	
14	1.564	1.506	68	48	2.0	1.7					X	0.23	0.26	0.31	0.28	0.03	1.4	
15	1.361	1.278	93	69	2.6	2.1					X	0.30	0.20	0.23	0.05	0.25	1.8	
16	1.879	1.794	10	55	2.1	1.9					X	0.31	0.21	0.17	0.28	0.22	1.5	
17	0.109	0.000	91	58	2.2	X					X	0.20	0.31	0.24	0.34	0.20	X	
18	0.230	0.050	95	64	2.5	X					X	0.17	0.13	0.16	0.32	0.28	MD	
19	1.630	1.557	26	53	3.0	2.5					X	0.22	0.09	0.15	0.16	0.11	2.6	
20	1.293	1.272	21	39	2.3	2.4					X	0.16	0.11	0.19	0.08	0.05	2.6	
21	1.249	1.210	80	61	2.9	2.5					X	0.29	0.26	0.12	0.05	0.31	2.9	
22	1.913	1.894	91	71	2.7	2.0					X	0.14	0.17	0.04	0.05	0.33	1.6	
23	1.926	1.834	95	66	2.4	1.8					X	0.23	0.17	0.26	0.27	0.24	3.0	
24	1.018	0.930	23	54	1.5	1.6					X	0.19	0.16	0.14	0.22	0.32	2.2	
25	1.104	1.016	60	47	2.2	1.4					X	0.20	0.24	0.21	0.18	0.15	2.3	
26	1.934	1.896	25	48	1.7	1.5					X	0.25	0.17	0.27	0.29	0.14	3.2	
27	1.337	1.321	50	37	2.6	2.2					X	0.18	0.30	0.28	0.33	0.27	1.7	
28	1.909	1.893	64	47	2.5	1.9					X	0.21	0.19	0.26	0.15	0.12	2.3	
29																		
30																		
31																		
Total	38.587	36.415																
Avg	1.378	1.301																
Max	2.650	1.896																
Min	0.000	0.000																

NOTE: ONLY use the "Time*" column to show the length of time that the disinfectant residual entering the distribution system fell below the acceptable level.

SUBMITTED BY: Hardy Worker **Certificate No. and Grade:** WS1234567, BS **Date:** March 9, 2011

TCEQ - 0102C (07-19-10, Excel 2007) PAGE 2 SWMOR

SURFACE WATER MONTHLY OPERATING REPORT

FOR PUBLIC WATER SYSTEMS THAT ARE USING SURFACE WATER SOURCES OR GROUND WATER SOURCES UNDER THE INFLUENCE OF SURFACE WATER (cont.)

Filter Data Page

PUBLIC WATER SYSTEM NAME: Aguaville PWS

PLANT NAME OR NUMBER: Schwartz Plant

PWS ID No.: 1234567

Month: February **Year:** 2011

PERFORMANCE DATA

INDIVIDUAL FILTER TURBIDITY

Date	Filter No. 1		Filter No. 2		Filter No. 3		Filter No. 4		Filter No. 5		Filter No. 6		Filter No. 7		Filter No. 8		Filter No. 9		Filter No. 10	
	Max	4 Hrs	Max	4 Hrs	Max	4 Hrs	Max	4 Hrs	Max	4 Hrs	Max	4 Hrs	Max	4 Hrs	Max	4 Hrs	Max	4 Hrs	Max	4 Hrs
1	0.37	0.19	0.18	0.11	0.22	0.14	0.31	0.16	0.42	0.22	0.35	0.18								
2	0.38	0.21	0.21	0.13	0.25	0.11	0.33	0.13	0.47	0.23	0.40	0.13								
3	0.41	0.27	0.23	0.15	0.21	0.13	0.29	0.13	0.39	0.26	0.27	0.19								
4	1.32	0.57	0.72	0.34	0.67	0.26	0.87	0.48	1.05	0.52	0.84	0.40								
5	X	X	X	X	X	X	X	X	X	X	X	X								
6	0.27	0.16	0.27	0.14	0.29	0.09	0.42	0.20	0.46	0.19	0.37	0.12								
7	0.35	0.22	0.17	0.09	0.23	0.12	0.37	0.16	0.49	0.23	0.33	0.18								
8	0.33	0.17	0.22	0.12	0.17	0.08	0.32	0.13	0.38	0.17	0.26	0.17								
9	0.28	0.15	0.16	0.08	0.24	0.10	0.41	0.14	0.34	0.18	0.29	0.10								
10	0.21	0.19	0.14	0.07	0.11	0.05	0.26	0.15	0.41	0.21	0.32	0.23								
11	0.24	0.17	0.18	0.11	0.30	0.16	0.34	0.14	0.28	0.16	0.25	0.16								
12	0.36	0.20	0.19	0.10	MD	ND	0.42	0.21	0.48	0.24	0.38	0.20								
13	0.19	0.12	0.10	0.06	0.26	0.11	0.33	0.17	1.24	0.48	0.22	0.15								
14	0.29	0.18	0.23	0.09	0.18	0.10	0.35	0.16	0.40	0.20	0.29	0.13								
15	0.42	0.21	0.22	0.13	0.16	0.06	0.28	0.12	0.37	0.15	0.31	0.19								
16	0.26	0.17	0.15	0.08	0.27	0.15	0.32	0.19	0.39	0.15	0.36	0.21								
17	0.34	X	0.25	0.12	X	X	X	X	X	X	X	X								
18	0.18	0.16	0.24	0.14	X	X	X	X	X	X	X	X								
19	0.26	0.18	0.14	0.08	0.23	0.14	0.32	0.17	0.46	0.26	0.32	0.16								
20	0.25	0.15	0.20	0.11	0.27	0.17	0.38	0.18	0.39	0.24	0.26	0.13								
21	0.41	0.24	0.23	0.10	0.18	0.12	0.33	0.15	0.32	0.19	0.38	0.20								
22	0.39	0.22	0.19	0.13	0.20	0.13	0.29	0.20	0.42	0.23	0.23	0.17								
23	0.32	0.19	0.18	0.09	0.26	0.18	0.41	0.23	0.37	0.18	0.33	0.12								
24	0.27	0.17	0.22	0.15	0.28	0.11	0.39	0.19	0.40	0.25	0.37	0.18								
25	0.22	0.15	0.21	0.12	0.14	0.08	0.31	0.20	0.35	0.20	0.35	0.20								
26	0.26	0.21	0.16	0.07	0.17	0.08	0.29	0.16	0.45	0.27	0.30	0.15								
27	0.31	0.25	0.25	0.11	0.21	0.12	0.36	0.14	0.41	0.28	0.27	0.11								
28	0.29	0.20	0.16	0.09	0.19	0.10	0.30	0.18	0.38	0.22	0.29	0.13								
29																				
30																				
31																				

SUMMARY & COMPLIANCE ACTIONS

Criteria	Filter No. 1	2	3	4	5	6	7	8	9	10	Plant
Number of days with event(s) above 0.5 NTU at 4.0 hrs this month	1	0	0	0	0	0					
Number of days with event(s) above 1.0 NTU this month	1	0	0	0	2	0					
Number of days with event(s) above 1.0 NTU last month	0	0	0	0	1	1					
Number of days with event(s) above 1.0 NTU two months ago	1	0	2	3	1	1					
Total number of days with event(s) above 1.0 NTU in three months	2	0	2	3	4	2					
Number of days with event(s) above 2.0 NTU this month											0
Number of days with event(s) above 2.0 NTU last month											0
Does the filter/plant have an approved Corrective Action Plan?	N	N	N	N	N	N					N
Is the plant required to submit a Filter Profile Report?	Y	N	N	N	Y	N					
Is the plant required to submit a Filter Assessment Report?	N	N	N	N	Y	N					
Is the plant required to submit a Request for Compliance CPE?											N

SUBMITTED BY: Hardy Worker

Certificate No. and Grade: WS1234567, BS

Date: March 9, 2011

TCEQ - 0102C (07-19-10, Excel 2007) PAGE 3 SWMOR

SURFACE WATER MONTHLY OPERATING REPORT

FOR PUBLIC WATER SYSTEMS THAT ARE USING SURFACE WATER SOURCES
OR GROUND WATER SOURCES UNDER THE INFLUENCE OF SURFACE WATER (cont.)
Disinfection Data Page

PUBLIC WATER SYSTEM NAME: Aguaville PWS

PLANT NAME OR NUMBER: Schwartz Plant

PWS ID No.: 1234567

Month: February Year: 2011

DISINFECTION PROCESS PARAMETERS

APPROVED CT STUDY PARAMETERS						PERFORMANCE STANDARDS	
	Disinfection Zones					Log Inactivations	
Parameters	D1	D2	D3	D4	D5	Giardia lamblia Cysts	Viruses
Flow Rate (MGD)	45.000	0.480	0.960			0.5	2.0
T_{10} (minutes)	46.7	11.7	222.1				

PERFORMANCE DATA

Date	Disinfectant	C (mg/L)	Flow (MGD)	Temp (°C)	pH	Giardia Log	Virus Log	Inact. Ratio	Time*
1	NA *D1*								
	FCL *D2*	3.4	0.480	13.1	7.5				
	CLA *D3*	3.2	0.960	13.1	7.6	2.26	39.37	4.51	
	D4							(G)	
	D5								
2	NA *D1*								
	FCL *D2*	2.9	2.000	11.2	7.5				
	CLA *D3*	3.1	2.000	11.2	7.6	0.75	7.73	1.50	
	D4							(G)	
	D5								
3	NA *D1*								
	FCL *D2*	2.6	0.480	9.3	7.3				
	CLA *D3*	2.4	0.960	9.3	7.2	1.49	23.10	2.98	
	D4							(G)	
	D5								
4	FCL *D1*	0.4	1.440	8.9	6.8				
	FCL *D2*	2.5	0.480	8.9	7.2				
	CLA *D3*	2.2	0.960	8.9	7.3	19.04	421.51	38.09	
	D4							(G)	
	D5								
5	NA *D1*								
	NA *D2*								
	NA *D3*					NA	NA	NA	
	D4								
	D5								
6	NA *D1*								
	FCL *D2*	1.8	0.480	10.2	7.5				
	CLA *D3*	2.1	0.960	10.2	7.6	1.25	17.35	2.49	
	D4							(G)	
	D5								
7	NA *D1*								
	FCL *D2*	2.9	0.480	9.3	7.6				
	CLA *D3*	2.4	0.960	9.3	7.6	1.47	25.58	2.94	
	D4							(G)	
	D5								
8	NA *D1*								
	FCL *D2*	3.2	0.480	8.6	7.2				
	CLA *D3*	3.3	0.960	8.6	7.4	1.88	27.32	3.76	
	D4							(G)	
	D5								

PERFORMANCE DATA

Date	Disinfectant	C (mg/L)	Flow (MGD)	Temp (°C)	pH	Giardia Log	Virus Log	Inact. Ratio	Time*
9	NA *D1*								
	FCL *D2*	1.9	0.480	7.9	7.1				
	CLA *D3*	3.4	0.960	7.9	7.3	1.64	16.37	3.29	
	D4							(G)	
	D5								
10	NA *D1*								
	FCL *D2*	2.1	0.260	8.9	7.7				
	CLA *D3*	2.3	0.520	8.9	7.6	2.32	33.96	4.65	
	D4							(G)	
	D5								
11	NA *D1*								
	FCL *D2*	2.4	0.260	9.2	7.8				
	CLA *D3*	2.3	0.520	9.2	8.0	2.41	39.21	4.83	
	D4							(G)	
	D5								
12	NA *D1*								
	FCL *D2*	3.1	0.480	10.3	7.5				
	CLA *D3*	2.9	0.960	10.3	7.2	1.79	29.55	3.58	
	D4							(G)	
	D5								
13	NA *D1*								
	FCL *D2*	3.3	0.480	9.5	7.5				
	CLA *D3*	2.9	0.960	9.5	7.2	1.75	29.63	3.50	
	D4							(G)	
	D5								
14	NA *D1*								
	FCL *D2*	2.6	0.480	10.5	7.8				
	CLA *D3*	2.6	0.960	10.5	7.5	1.54	25.26	3.08	
	D4							(G)	
	D5								
15	NA *D1*								
	FCL *D2*	2.4	0.480	8.7	7.3				
	CLA *D3*	2.4	0.960	8.7	7.4	1.41	20.58	2.82	
	D4							(G)	
	D5								
16	FCL *D1*	0.2	1.440	6.1	6.8				
	FCL *D2*	3.1	0.480	6.1	7.2				
	CLA *D3*	2.9	0.960	6.1	7.3	8.79	186.80	17.59	
	D4							(G)	
	D5								

NOTES: * ONLY use the "Time=" column to show the length of time that the total inactivation ratio was less than 1.00.
* Not representative of total log inactivation(s) and/or total inactivation ratio for all disinfection zones; Excluded from statistical summary calculations.

SUBMITTED BY: Hardy Worker

Certificate No. and Grade: WS1234567, BS

Date: March 9, 2011

TCEQ - 0102C (07-19-10, Excel 2007) PAGE 4 SWMOR

SURFACE WATER MONTHLY OPERATING REPORT

FOR PUBLIC WATER SYSTEMS THAT ARE USING SURFACE WATER SOURCES
OR GROUND WATER SOURCES UNDER THE INFLUENCE OF SURFACE WATER (cont.)
Disinfection Data Page (cont.)

PUBLIC WATER SYSTEM NAME: Aguaville PWS
PLANT NAME OR NUMBER: Schwartz Plant
PWS ID No.: 1234567
Month: February
Year: 2011

DISINFECTION PROCESS PARAMETERS

APPROVED CT STUDY PARAMETERS						PERFORMANCE STANDARDS	
	Disinfection Zones					Log Inactivations	
Parameters	D1	D2	D3	D4	D5	Giardia lamblia Cysts	Virus
Flow Rate (MGD)	45.000	0.480	0.960			0.5	2.0
T_{10} (minutes)	46.7	11.7	222.1				

PERFORMANCE DATA

Date	Disinfectant	C (mg/L)	Flow (MGD)	Temp (°C)	pH	Giardia Log	Virus Log	Inact. Ratio	Time*
17	FCL *D1*	0.3	0.720	4.3	7.0				
	FCL *D2*	2.8	0.480	4.3	7.5				
	CLA *D3*	2.9	0.720	4.3	7.8	19.21	442.55	38.42	
	D4							(G)	
	D5								
18	NA *D1*								
	FCL *D2*	2.5	0.480	8.1	7.6				
	CLA *D3*	2.6	0.960	8.1	7.7	1.39	20.63	2.79	
	D4							(G)	
	D5								
19	NA *D1*								
	FCL *D2*	3.1	0.480	9.9	7.5				
	CLA *D3*	2.9	0.960	9.9	7.5	1.75	28.75	3.51	
	D4							(G)	
	D5								
20	NA *D1*								
	FCL *D2*	3.0	0.480	10.3	7.2				
	CLA *D3*	2.7	0.960	10.3	7.4	1.78	28.52	3.57	
	D4							(G)	
	D5								
21	NA *D1*								
	FCL *D2*	2.8	0.480	11.2	7.7				
	CLA *D3*	2.9	0.960	11.2	7.6	1.77	28.64	3.54	
	D4							(G)	
	D5								
22	NA *D1*								
	FCL *D2*	2.1	0.480	10.9	7.4				
	CLA *D3*	1.9	0.960	10.9	7.5	1.30	20.82	2.60	
	D4							(G)	
	D5								
23	NA *D1*								
	FCL *D2*	2.6	0.480	12.4	7.3				
	CLA *D3*	2.8	0.960	12.4	7.3	1.92	28.99	3.83	
	D4							(G)	
	D5								
24	NA *D1*								
	FCL *D2*	2.8	0.480	13.6	7.6				
	CLA *D3*	2.7	0.960	13.6	7.5	1.95	33.63	3.90	
	D4							(G)	
	D5								

PERFORMANCE DATA

Date	Disinfectant	C (mg/L)	Flow (MGD)	Temp (°C)	pH	Giardia Log	Virus Log	Inact. Ratio	Time*
25	NA *D1*								
	FCL *D2*	0.0	0.480	10.8	7.8				
	CLA *D3*	2.1	0.960	10.8	7.7	0.80	1.63	0.81	0.75
	D4							(V)	
	D5								
26	NA *D1*								
	FCL *D2*	3.0	0.480	10.3	7.3				
	CLA *D3*	3.2	0.960	10.3	7.3	1.94	28.90	3.88	
	D4							(G)	
	D5								
27	NA *D1*								
	FCL *D2*	2.6	0.260	11.4	7.6				
	CLA *D3*	2.8	0.520	11.4	7.5	3.21	49.94	6.42	
	D4							(G)	
	D5								
28	NA *D1*								
	FCL *D2*	ND	0.480	12.6	7.6				
	CLA *D3*	2.7	0.960	12.6	7.7	1.11*	2.37*	1.18	
	D4							(V)	
	D5								
29	*D1*								
	D2								
	D3								
	D4								
	D5								
30	*D1*								
	D2								
	D3								
	D4								
	D5								
31	*D1*								
	D2								
	D3								
	D4								
	D5								

	Giardia Log	Virus Log
Max	19.21	442.55
Min	0.75	1.63
Avg	3.26	61.43
SD	4.71	109.67

NOTES: = ONLY use the "Time=" column to show the length of time that the total inactivation ratio was less than 1.00.
* Not representative of total log inactivation(s) and/or total inactivation ratio for all disinfection zones; Excluded from statistical summary calculations.

SUBMITTED BY: Hardy Worker
Certificate No. and Grade: WS1234567, BS
Date: March 9, 2011

TCEQ - 0102C (07-19-10, Excel 2007) PAGE 5 SWMOR

MONTHLY TOTAL ORGANIC CARBON REMOVAL REPORT (TOCMOR)

FOR SURFACE WATER OR GROUND WATER UNDER THE INFLUENCE OF SURFACE WATER SYSTEMS

PUBLIC WATER SYSTEM NAME: Aguaville PWS

PLANT NAME OR NUMBER: Schwartz Plant

PWS ID No.: 1234567

Month: February Year: 2011

Type of treatment: [X] Conventional [ ] Unconventional explain:

Note: Systems are required to run one TOC Sample Set every month. Additional space is provided for those systems that do additional sampling

Test No.	Test Date	Monthly TOC Sample Set			Actual % TOC Removed	Step 1 Required % Removal	Step 1 Removal Ratio	Optional data		COMPLIANCE REMOVAL RATIO
		Raw Alkalinity	Raw TOC	Treated TOC				Step 2 Required % Removal	Step 2 Removal Ratio	
		Enter the Sample Set results			*calculated*	*calculated from matrix*	*calculated*	*Please attach the p3-Step2 worksheet*	*calculated*	*calculated*
1	2/8	136	4.20	3.30	21.4	25	0.86	22.7	0.9	0.94
2										
3										
4										
5										
6										
7										
8										
9										
10										
11										
12										
13										
14										
15										
16										
17										
18										
19										
20										
21										
22										
23										
24										
25										
26										
27										
28										
29										
30										
31										
Avg		136.00	4.20	3.30	21.43		0.86		0.9	0.94
Max		136.00	4.20	3.30	21.43		0.86		0.9	0.94
Min		136.00	4.20	3.30	21.43		0.86		0.9	0.94

TOTAL ORGANIC CARBON (TOC) REMOVAL SUMMARY

TOC Summary: Don't forget to include a copy of your P.7-TOC ACC worksheet with your report.					Monthly Compliance Ratio
Raw Water Alkalinity	Raw Water TOC	Treated Water TOC	TOC % Removal	ACC # used	
136	4.20	3.30	21.4	6 RAA	1.00

I certify that I am familiar with the information contained in this report and that, to the best of my knowledge, the information is true, complete, and accurate.

Operator's Signature: Hardy Worker Certificate No. and Grade: WS1234567, BS Date: March 9, 2011

Submit the report by the 10th of the month following the reporting period to:

TEXAS COMMISSION ON ENVIRONMENTAL QUALITY
WATER SUPPLY DIVISION/PUBLIC DRINKING WATER SECTION (MC-155)
P.O. BOX 13087, AUSTIN, TEXAS 78711-3087

TCEQ - 0879 (09-01-09) TOCMOR, Page 1 - Summary TOCMOR

TOC ALTERNATIVE COMPLIANCE CRITERIA REPORT
FOR SURFACE WATER OR GROUND WATER UNDER THE INFLUENCE OF SURFACE WATER SYSTEMS

PUBLIC WATER SYSTEM NAME: Aguaville PWS
PWS ID No.: 1234567
PLANT NAME OR NUMBER: Schwartz Plant
Month: February Year: 2011

This Alternative Compliance Criteria (ACC) Report is being submitted to request the following ACC: (check one)
(Before you can begin entering data, you must put an "X" in the box that shows the number of the Alternative Compliance Criteria you are applying for.)

#1	#2	#3	#4	#5	#6	#7	#8
					X		

ACC #1

ACC # 2

ACC # 3

ACC # 4

ACC # 5

ACC # 6

Treated water SUVA less than or equal to 2.0 L/mg-m?
(either based on most recent month's data OR calculated quarterly as a running annual average)

(Treated water SUVA is the ultraviolet light absorption at 254 nanometers divided by the dissolved organic carbon concentration in the finished water before any disinfection of any kind, or measured using a finished water SUVA jar test. Measure monthly.)

Treated water SUVA measured: [ ] In Plant [X] By Finished Water SUVA Jar Test (Be sure to sign the certification)

I certify that an oxidant was used upstream of the Treated Water TOC monitoring point during the period for which treated water SUVA data is reported.

Certified Operators Signature / Certificate Number / Date

Current Month SUVA		Q1			Q2			Q3			Q4		
	Month/Year	01/2010	02/2010	03/2010	04/2010	05/2010	06/2010	07/2010	08/2010	09/2010	10/2010	11/2010	12/2010
	Monthly Treated Water SUVA	2.02	2.00	2.12	1.90	1.98	2.01	1.80	1.94	1.91	2.06	1.98	1.89
	Quarterly Average			2.05			1.96			1.88			1.98
	RAA												1.97

ACC #7

ACC # 8

I certify that I am familiar with the information contained in this report and that, to the best of my knowledge, the information is true, complete, and accurate.

Operator's Signature: Hardy Worker Certificate No. and Grade: WS1234567, BS Date: March 9, 2011

TCEQ - 0879 (09-01-09) TOCMOR, Page 2 - ACC Attachment TOCMOR

STEP 2 JAR TEST REPORT

FOR SURFACE WATER OR GROUND WATER UNDER THE INFLUENCE OF SURFACE WATER SYSTEMS

PUBLIC WATER SYSTEM NAME: Aguaville PWS

PWS ID No.: 1234567

PLANT NAME OR NUMBER: Schwartz Plant

DATE OF JAR TEST: December 13, 2010

PLANT CONDITIONS								
RAW WATER SOURCE(s)	COAGULANT		COAGULANT AID		FLOC AID		pH ADJUSTMENT	
	Type	Dose (mg/L)	Type	Dose (mg/L)	Type	Dose (mg/L)	Type	Dose (mg/L)
Allen R. Gammage Reservoir and Lake Schwartz	Alum	45.00	Cationic polymer	0.50	NA		NA	

STEP 2 JAR TEST PARAMETERS									
COAGULANT		BASE		JAR SIZE	JAR TEST CONDITIONS				
					Rapid Mix		Flocculation		Settling
Type	Stock Solution Concentration (g/L)	Type	Stock Solution Concentration (g/L)	Volume (liters)	Speed (rpm)	Duration (minutes)	Speed (rpm)	Duration (minutes)	Duration (minutes)
Alum	2	NA		2	325.0	0.5	50, 30, 15	3.0, 3.0, 3.0	20.0

JAR TEST RESULTS									
Jar No.	COAGULANT		BASE		Alkalinity (mg/L as $CaCO_3$)	pH	TOC (mg/L)	Incremental TOC Removal (mg/L TOC removed per 10 mg/L of alum)	Cumulative TOC Removal (%)
	Dose (Alum eq.) (mg/L)	Volume (mL)	Dose (mg/L)	Volume (mL)					
RAW	0				144	7.6	4.4		
1	20	2.00				7.5	4.2	0.1	4.5
2	30	3.00				7.5	3.9	0.3	11.4
3	40	4.00				7.4	3.7	0.2	15.9
4	50	5.00			Target pH (based on raw water alkalinity)	7.4	3.4	0.3	22.7
5	60	6.00				7.3	3.4	0.0	22.7
6	70	7.00				7.3	3.2	0.2	27.3
7	80	8.00				7.1	3.0	0.2	31.8
8	90	9.00			7.0	6.9	3.1	-0.1	bad data point
9									
10									
11									
12									

Has the TCEQ approved this source as "Not Amenable" to Treatment even though Target pH was not reached? If "yes", provide the date of the TCEQ letter or e-mail.		TOC, % Removal at Apparent PODR:	More than 1 PODR
		More than one PODR found; please enter correct PODR value:	22.7%

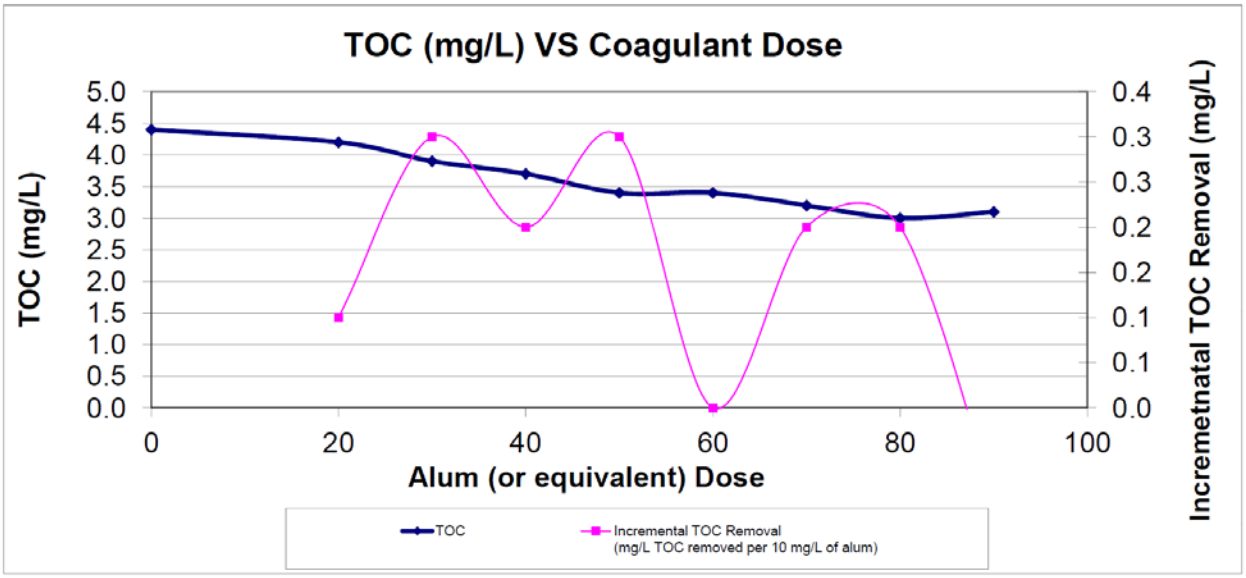

I certify that I am familiar with the information contained in this report and that, to the best of my knowledge, the information is true, complete, and accurate.

Operator's Signature: Hardy Worker

Certificate No. and Grade: WS1234567, BS

TCEQ - 0879 (09-01-09) TOCMOR, Page 3 - Step 2 Jar Test Attachment TOCMOR

Appendix F:
EXAMPLE OF A COMPLETED FPR AND FAR

EXAMPLE OF A COMPLETED FPR

FILTER PROFILE REPORT FOR INDIVIDUAL FILTERS

FOR PUBLIC WATER SYSTEMS THAT ARE USING SURFACE WATER SOURCES OR GROUND WATER SOURCES UNDER THE INFLUENCE OF SURFACE WATER THAT ARE REQUIRED TO CONDUCT ADDITIONAL INDIVIDUAL FILTER MONITORING

PUBLIC WATER SYSTEM NAME: Aguaville WSC

PLANT NAME OR NUMBER: Schwartz Water Treatment Plant

PWS ID No.: 1234567

Month: February Year: 2010

OBVIOUS REASONS

FILTER NO.:	1	1	5
DATE:	02-04-10	02-04-10	02-04-10
TIME:	10:00 AM	4:15 PM	11:45 AM
DURATION:	45.00	15.00	15.00
TURBIDITY:	1.32	0.57	1.05
OBVIOUS REASONS *(Check all that apply)*			
NONE IDENTIFIED - *A Filter Profile must be submitted*	☐ *(See Profile No. ____)*	☐ *(See Profile No. ____)*	☐ *(See Profile No. ____)*
Filter Problems			
Post-Backwash Turbidity Spike	☐	☑	☐
Prolonged Filter Run Time	☑	☐	☐
Excessive Filter-Loading Rate	☐	☐	☐
Rate-of-Flow Control Valve Failure	☐	☐	☐
Media Defects (insufficient depth, mudballs, etc.)	☐	☐	☐
Inadequate Surface Wash or Backwash Facilities	☐	☐	☐
Backwash Artifact	☐	☐	☑
Turbidimeter Errors			
Incorrect Calibration	☐	☐	☐
Air Bubble	☐	☐	☐
Debris	☐	☐	☐
Chemical Feed Equipment Failure			
Coagulant	☐	☐	☐
Coagulant Aid	☐	☐	☐
Filter Aid	☐	☐	☐
Poor Raw Water Quality	☐	☐	☐
Other Major Unit Process Failures/Maintenance Activities	☐	☐	☐
Specify:			Backwash Filter No. 1

OBVIOUS REASONS

FILTER NO.:	5		
DATE:	02-13-10		
TIME:	2:15 PM		
DURATION:	15.00		
TURBIDITY:	1.24		
OBVIOUS REASONS *(Check all that apply)*			
NONE IDENTIFIED - *A Filter Profile must be submitted*	☑ *(See Profile No. 1)*	☐ *(See Profile No. ____)*	☐ *(See Profile No. ____)*
Filter Problems			
Post-Backwash Turbidity Spike	☐	☐	☐
Prolonged Filter Run Time	☐	☐	☐
Excessive Filter-Loading Rate	☐	☐	☐
Rate-of-Flow Control Valve Failure	☐	☐	☐
Media Defects (insufficient depth, mudballs, etc.)	☐	☐	☐
Inadequate Surface Wash or Backwash Facilities	☐	☐	☐
Backwash Artifact	☐	☐	☐
Turbidimeter Errors			
Incorrect Calibration	☐	☐	☐
Air Bubble	☐	☐	☐
Debris	☐	☐	☐
Chemical Feed Equipment Failure			
Coagulant	☐	☐	☐
Coagulant Aid	☐	☐	☐
Filter Aid	☐	☐	☐
Poor Raw Water Quality	☐	☐	☐
Other Major Unit Process Failures/Maintenance Activities	☐	☐	☐
Specify:			

SUBMITTED BY: *Hardy Worker*

Certificate No. and Grade: 123-45-6789, BSW

Date: 24-Feb-10

TCEQ - 10276 (10-02-00) PAGE 1 FPR

FILTER PROFILE REPORT FOR INDIVIDUAL FILTERS

FOR PUBLIC WATER SYSTEMS THAT ARE USING SURFACE WATER SOURCES OR GROUND WATER SOURCES UNDER THE INFLUENCE OF SURFACE WATER THAT ARE REQUIRED TO CONDUCT ADDITIONAL INDIVIDUAL FILTER MONITORING

PUBLIC WATER SYSTEM NAME: Aguaville WSC

PLANT NAME OR NUMBER: Schwartz Water Treatment Plant

PWS ID No.: 1234567

Month: February Year: 2010

NARRATIVE DESCRIPTION OF FILTER PROFILE

FILTER NO.: 5

PROFILE NO.: 1

DATE OF PROFILE: February 19, 2010

DETAILS: The filter profile on Filter No. 5 began at 1:28 pm on Tuesday, February 19 following a routine backwash and our typical 45-minute idle time that we allow for filter pre-ripening. The filter profile ended at 12:03 am on Thursday, February 21, when the plant was taken off-line for the day. Filter No. 5 was backwashed and returned before the plant was returned to service the following morning. Some specific observations we made during the filter profile include:

1) there was a significant increase in the IFE turbidity level at 6:00 pm on the 19th when the plant's production rate was increased from 9.6 MGD to 13.2 MGD.
2) the 4-hour IFE turbidity level on Filter No. 5 was recorded at 12:30 pm and was 0.262 NTU.
3) a turbidity spike was observed when Filter No. 3 was taken off-line and backwashed at 8:28 pm on the 19th.
4) the maximum daily 15-minute IFE reading from Filter No. 5 occurred at 8:30 pm on the 19th while backwashing Filter No. 3
5) the plant was shut off for the night at 11:55 pm and was not started up again until 8:00 on Wednesday, February 20th.
6) the short-but severe turbidity spike that occurred at 11:46 am on the 20th was an unusual reading that occurred when we flushed the turbidimeter body as part of our routine maintenance activities.
7) the 4-hr IFE reading for Filter No. 5 occurred at 12:00 noon and was 0.235 NTU
8) at 2:35 pm on the 20th, we took Filter No. 6 off-line for backwashing
9) the maximum daily 15-minute reading for the 20th (on Filter No. 5) was 0.394 NTU and occurred while Filter No. 6 was still off-line

NARRATIVE DESCRIPTION OF FILTER PROFILE

FILTER NO.:

PROFILE NO.:

DATE OF PROFILE:

DETAILS:

SUBMITTED BY: Hardy Worker

Certificate No. and Grade: 123-45-6789, BSW

Date: February 24, 2010

TCEQ - 10276 (10-02-00) PAGE 2 FPR

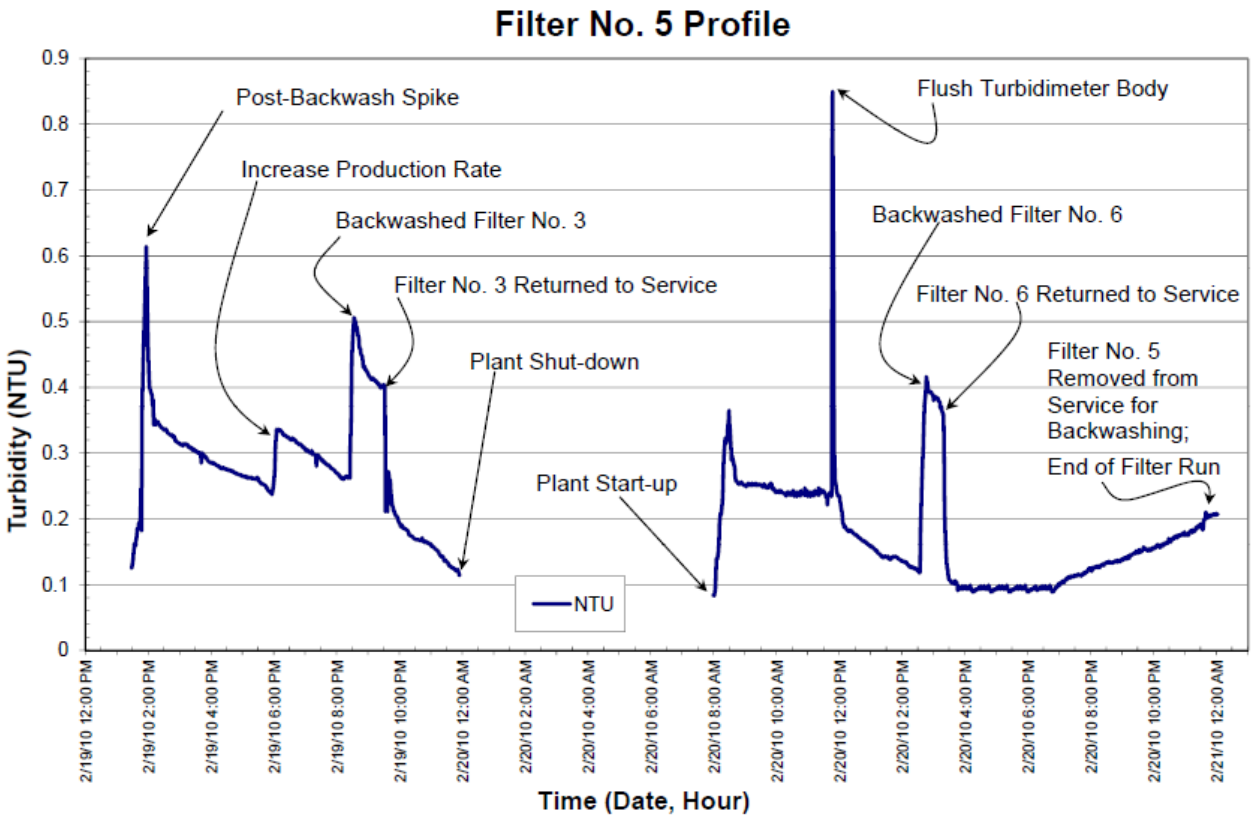
Filter No. 5 Profile
Post-Backwash Spike
Increase Production Rate
Backwashed Filter No. 3
Filter No. 3 Returned to Service
Plant Shut-down
Plant Start-up
Flush Turbidimeter Body
Backwashed Filter No. 6
Filter No. 6 Returned to Service
Filter No. 5 Removed from Service for Backwashing;
End of Filter Run
NTU
Turbidity (NTU)
Time (Date, Hour)
0
0.1
0.2
0.3
0.4
0.5
0.6
0.7
0.8
0.9
2/19/10 12:00 PM
2/19/10 2:00 PM
2/19/10 4:00 PM
2/19/10 6:00 PM
2/19/10 8:00 PM
2/19/10 10:00 PM
2/20/10 12:00 AM
2/20/10 2:00 AM
2/20/10 4:00 AM
2/20/10 6:00 AM
2/20/10 8:00 AM
2/20/10 10:00 AM
2/20/10 12:00 PM
2/20/10 2:00 PM
2/20/10 4:00 PM
2/20/10 6:00 PM
2/20/10 8:00 PM
2/20/10 10:00 PM
2/21/10 12:00 AM

Example of a Completed FAR

FILTER ASSESSMENT REPORT FOR INDIVIDUAL FILTERS

FOR PUBLIC WATER SYSTEMS THAT ARE USING SURFACE WATER SOURCES OR GROUND WATER SOURCES UNDER THE INFLUENCE OF SURFACE WATER THAT ARE REQUIRED TO CONDUCT AN INDIVIDUAL FILTER ASSSESSMENT

PUBLIC WATER SYSTEM NAME:	Aguaville WSC	PLANT NAME OR NUMBER:	Schwartz Water Treatment Plant
PWS ID No.:	1234567	FILTER NUMBER:	Filter No. 5

DESIGN SPECIFICATIONS

FILTER TYPE	Gravity	OPERATING MODE	Constant Rate/Variable Level

	Diameter (ft)	Length (ft)	Width (ft)	Surface Area (ft^2)	Freeboard (ft)	Max Head Loss (ft)
MEDIA BED DIMENSIONS		12.00	24.00	288.00	3.25	13.00

MEDIA TYPE	Multiple Media					
MEDIA SPECS	Material	Depth (inches)	Min. Size (mm)	Max. Size (mm)	UC	Specific Gravity
Layer 1 Material	Anthracite	24.00	0.90	1.20	1.60	Unknown
Layer 2 Material	Sand	12.00	0.45	0.55	1.40	Unknown
Layer 3 Material	Garnet	3.00	0.20	0.35	1.40	Unknown
Layer 4 Material						
TOTAL DEPTH (inches)	39.00					
L/D RATIO	1206.4					

UNDERDRAIN TYPE	Type-S with gravel			
	No. of Grades	Min. Size (in)	Max. Size (in)	Total Depth (in)
SUPPORT GRAVEL	4	0.25	1.50	12.00

TROUGHS		SUPPL. BACKWASH	Air Scour (retrofit)
Number.	5		
Separation (inches)	39.00	FILTER-TO-WASTE	No

	Regulatory Std	Design	Typical	During Backwash	Maximum	App'd Exception
FILTER FLOW RATE (gpm)	1440	1400	1111	1333	1833	None
LOADING RATE (gpm/ft^2)	5.0	4.86	3.86	4.63	6.36	None
BW FLOW RATE (gpm)	3600 - 6278	5000	3800		5000	
BW LOADING RATE (gpm/ft^2)	12.5 - 21.8	17.36	13.19		17.36	

	Source	Controller	Meter	Turbidimeter	LOHG
FILTER INFLUENT		Fix. weir Splitter	Proportional	None	
FILTER EFFLUENT		None	None	Hach 1720D	Water Lvl Indicator
BACKWASH WATER	Filters & Pump	Mot. Valve (Auto.)	Ultrasonic	None	

ADDITIONAL REMARKS: There flow distribution to the filter is controlled with a fixed-weir splitter box and a valve that is completely opened when the filter is on-line and is completely closed when the filter is out of service during backwash and the subsequent idle period.

OPERATING PROCEDURES

CALIBRATION	Flow Meter	Backwash Meter	Mech. ROFC	NTU (Primary)	NTU (Secondary)
Method	Ultrasonic	Ultrasonic		Formazin	Comparison
Frequency	Annual	Annual		Quarterly	Weekly
Date of Last	June 13, 2010	June 13, 2011		January 24, 2012	February 14, 2012

BACKWASH	Turbidity (NTU)	LOH (ft)	Run Time (hr)	Run Volume (gal)	Filtration Rate
Criteria	1.0 NTU	10.00	48.00	NA	NA
Monitoring Interval	5 min	8 hrs	Each Shift		

WRITTEN SOPs	
Plant Start-up	Complete
Filter Start-up	Complete
Plant Shutdown	Partial
Filter Shutdown	Partial
Filter Backwash	Complete
Filter Inspection	None

ADDITIONAL REMARKS: We are creating a Filter Inspection SOP as part of this Filter Assessment.

I certify that I am familiar with the information contained in this report and that, to the best of my knowledge, the information is true, complete, and accurate.

Operator's Signature: Más Papeleo

Operator's Name (printed): Más Papeleo

Certificate No. and Class: 987-65-4321

Date: February 23, 2012

Submit Report to TCEQ/Water Supply Division (MC-159), ATTN: SWTR Coordinator, P.O. Box 13087, Austin, TX 78711-3087
The report is due the 10th of the following month

TCEQ - 10277 (10-02-00) PAGE 1 Filter Assessment Report

FILTER ASSESSMENT REPORT FOR INDIVIDUAL FILTERS

FOR PUBLIC WATER SYSTEMS THAT ARE USING SURFACE WATER SOURCES OR GROUND WATER SOURCES UNDER THE INFLUENCE OF SURFACE WATER THAT ARE REQUIRED TO CONDUCT AN INDIVIDUAL FILTER ASSSESSMENT

PUBLIC WATER SYSTEM NAME:	Aguaville WSC	PLANT NAME OR NUMBER:	Schwartz Water Treatment Plant
PWS ID No.:	1234567	FILTER NUMBER:	Filter No. 5

CURRENT CONDITIONS

DATE	TIME	TURBIDITY (NTU)	LOH (ft)	FLOW RATE (gpm)	RUN TIME (hr)	RUN VOLUME (gal)
17-Feb-12	6:00 AM	0.32	7.00	1,100	18.75	Unknown

PHYSICAL CONDITION	
Walls	Good
Troughs	Minor Damage
Suppl. Backwash	Fully Operational
Flow Meter	
ROFC	Fully Operational
Flow Control Valve	Fully Operational
Turbidimeter	Fully Operational
LOHG	Slight Malfunction

ADDITIONAL REMARKS: Some of the indicator marks on the LOHG ruler are not legible.

MEDIA SURFACE CONDITIONS

	Before BW	After BW
MOUNDS		
Number	3	1
Length (inches)	6 - 12	12
Width (inches)	6 - 9	12
Height (inches)	1 - 2.5	1.0
DEPRESSIONS		
Number	6	0
Length (inches)	18 - 36	
Width (inches)	5 - 6	
Depth (inches)	1.5 -3.75	
ACCUMULATED FLOC		
Thickness (inches)	0 - 0.25	Minimal
Distribution	Uniform	Uniform

	Before BW	After BW
RETRACTION		
Number	1	0
Length (inches)	18	
Width (inches)	1	
Depth (inches)	1.5	
CRACKS		
Number	6	0
Length (inches)	6 - 15	
Width (inches)	0 - 0.5	
Depth (inches)	0 - 0.5	
MUDBALLS		
No. per ft^2	>10	0
Size (inches)	0.25 - 0.75	
Distribution	Localized	

ADDITIONAL REMARKS: The largest depressions are located adjacent to the backwash troughs. With the exception of one slight mound in the southwest corner of the filter, all of the anomalies were eliminated by the backwash cycle.

BACKWASH CONDITIONS

BW FLOW RATE (gpm)	2800
RISE RATE (inches/minute)	15.60
LOADING RATE (gpm/ft^2)	9.72
DURATION (minutes)	12.00
TOTAL VOLUME (gallons)	39,200
TROUGHS	
Levelness	Slighly Unlevel
Flooding	None
SUPPL. BACKWASH	
Duration (minutes)	5.0
Effectiveness	Adequate
JETTING	
No. of Sites	2
Severity	Moderate
BW WATER DISTRIBUTION	Even/Uniform
SPENT BWW TURBIDITY	2.98
EXPANSION (inches)	12.00
EXPANSION (percent)	35.29411765
YIELD (percent)	Unknown

ADDITIONAL REMARKS: In one area of the filter, a severe jet was observed but we classified it as moderate because it did not seem to affect the backwash effectiveness in other parts of the filter.

Submitted by: Más Papeleo

Date: February 23, 2012

TCEQ - 10277 (10-02-00) PAGE 2 Filter Assessment Report

FILTER ASSESSMENT REPORT FOR INDIVIDUAL FILTERS

FOR PUBLIC WATER SYSTEMS THAT ARE USING SURFACE WATER SOURCES OR GROUND WATER SOURCES UNDER THE INFLUENCE OF SURFACE WATER THAT ARE REQUIRED TO CONDUCT AN INDIVIDUAL FILTER ASSSESSMENT

PUBLIC WATER SYSTEM NAME:	Aguaville WSC	PLANT NAME OR NUMBER:	Schwartz Water Treatment Plant
PWS ID No.:	1234567	FILTER NUMBER:	Filter No. 5

FILTER PROBE

NUMBER OF SITES	121
MEDIA	
Max. Thickness (inches)	37.00
Min. Thickness (inches)	26.00
Typ. Thickness (inches)	34.00
SUPPORT MATERIAL	
Max. Elevation	70.00
Min. Elevation	77.00
Typ. Elevation	75.00

ADDITIONAL REMARKS: One relatively large gravel mound was detected in the northeast corner of the filter.

FILTER EXCAVATION

	REFERENCE	SITE 2	SITE 3	SITE 4	SITE 5	SITE 6
SITE CHARACTERISTIC	Normal	Normal	Normal	Media Mound	Gravel Mound	Crack
LAYER 1 (Top Layer)	18.00	19.00	18.00	21.00	14.00	18.00
INTERFACE 1	2.50	2.00	2.00	1.50	1.25	2.50
LAYER 2	11.00	12.00	11.00	11.00	10.00	12.00
INTERFACE 2	0.75	0.50	0.75	0.50	0.50	
LAYER 3	4.00	4.00	3.75	3.00	0.00	
INTERFACE 3						
LAYER 4						
MUDBALLS	Few	None	None	Few	None	Few
Max. Size (inches)	0.75			0.50		0.50
Min. Size (inches)	0.25			0.13		0.25
Max. Depth (inches)	4.00			5.00		3.00

	SITE 7	SITE 8	SITE 9	SITE 10	SITE 11	SITE 12
SITE CHARACTERISTIC	Retraction	Jetting				
LAYER 1 (Top Layer)	18.00	18.00				
INTERFACE 1	2.00	4.75				
LAYER 2	12.00	8.00				
INTERFACE 2	1.00	2.50				
LAYER 3	3.00	2.00				
INTERFACE 3						
LAYER 4						
MUDBALLS	Several	None				
Max. Size (inches)	0.75					
Min. Size (inches)	0.25					
Max. Depth (inches)	7.00					

MEDIA CONDITION	
Sharpness	Good
Encrustation	Slight
Uniformity	Marginal

ADDITIONAL REMARKS: The sand and garnet seemed in very good shape. The anthracite seemed slightly worn and encrusted. The anthracite grains did not seem very uniform in shape or size.

ADDITIONAL STUDIES

FILTER PROFILE ATTACHED?	Yes

Note: A Filter Profile must be attached to this report.

PERCENT MUDBALLS	
Media Volume (ml)	1680
Mudball Volume (ml)	14
% Mudballs	0.8%

ADDITIONAL REMARKS: Several of the mudballs were placed in a chlorine solution (200 ppm, pH=4.5) for 12 hours and the mudballs dissolved. A representative sample of filter media was dried in an oven, weighed, and then placed in the acidified chlorine solution. After 12 hours, the media was removed, rinsed several times, dried and reweighed. The media lost 12% of its mass. The chlorine solution had a brownish tint so we neutralized the chlorine with thiosulfate and ran iron and manganese tests on the material. The manganese result was 0.55 mg/L and the iron result was 0.2 mg/L.

CONCLUSIONS

CONCLUSIONS: We have lost 5-6 inches of our anthracite and the anthracite that remains seems to no longer meet manufacturer's specifications. There is also a large gravel mound in one area of the filter. The presence of the severe backwash jet and the degree that the media layers were intermixed suggests that there is some underdrain damage in that part of the filter. The filter profile that was run on February 19th suggests that the performance of Filter No. 5 is adversely affected by sudden flow rate changes.

CORRECTIVE ACTION PLAN ATTACHED?	Yes
WOULD YOU LIKE SOME TECHNICAL ASSISTANCE FROM THE TCEQ?	No

Submitted by: Más Papeleo

Date: February 23, 2012

TCEQ - 10277 (10-02-00) PAGE 3 Filter Assessment Report

FILTER ASSESSMENT REPORT FOR INDIVIDUAL FILTERS

FOR PUBLIC WATER SYSTEMS THAT ARE USING SURFACE WATER SOURCES OR GROUND WATER SOURCES UNDER THE INFLUENCE OF SURFACE WATER THAT ARE REQUIRED TO CONDUCT AN INDIVIDUAL FILTER ASSSESSMENT

PUBLIC WATER SYSTEM NAME:	Aguaville WSC	PLANT NAME OR NUMBER:	Schwartz Water Treatment Plant
PWS ID No.:	1234567	FILTER NUMBER:	Filter No. 5

FILTER SCHEMATIC

PREPARE A SIMPLE FILTER SCHEMATIC SHOWING THE LOCATION OF BACKWASH WATER TROUGHS, OBSERVED ANOMALIES, AND EXCAVATION SITES.

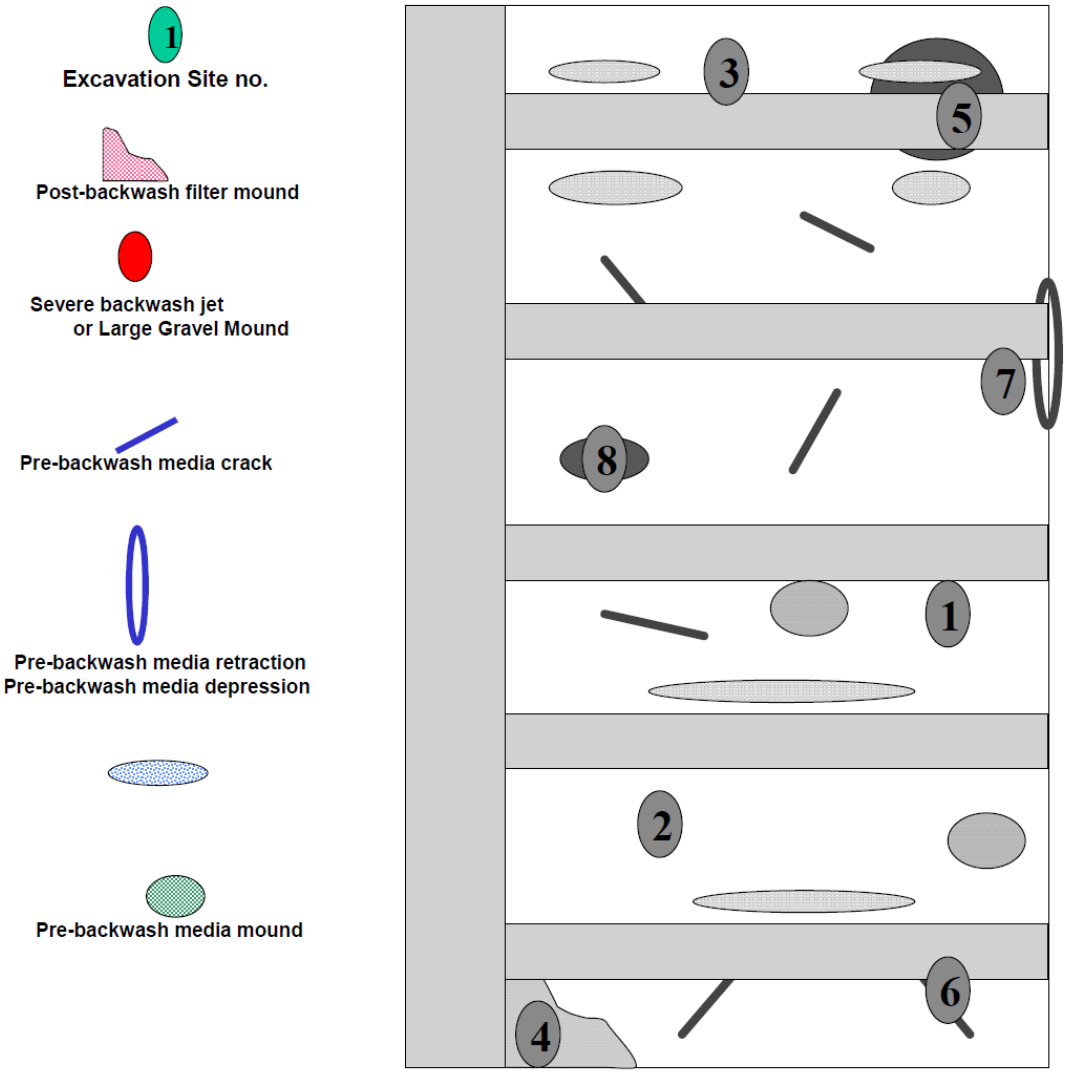

Submitted by: Más Papeleo

Date: February 23, 2012

TCEQ - 10277 (10-02-00) PAGE 4 Filter Assessment Report

CORRECTIVE-ACTION PLAN

Task: Improve the performance of Filter No. 5 by addressing the operational and filter defects identified during the filter assessment.

Plant: Aguaville WSC, Schwartz WTP

Date: February 25, 2012

Step No.	Activity	Description	By Whom	By When
1	Gather additional information	Submit 1.0 ft^3 of media to the Water Plant Sand Company to determine the size range, uniformity coefficient, and condition of each type of media material.	Plant manager	3/1/12
		Submit 1.0 ft^3 of media to Water Plant Reference Labs, Inc. to determine the composition of the material that appears to be deposited on the anthracite media.	Plant manager	3/1/12
		Contact our consulting engineer to discuss potential solutions to Filter No. 5 problem.	Plant manager	3/1/12
		Get a cost estimate for new media from the Water Plant Sand Company.	Plant manager	3/5/12
		Staff meeting to identify other concerns about Filter No. 5 and to discuss possible changes in plant SOPs.	Plant staff	3/5/12
2	Modify SOPs	Backwash SOP: Limit production rate to a maximum of 9.6 MGD when backwashing a filter.	Shift supervisors and operator IIs	3/15/12
		Plant start-up SOP: If the clearwell has more than 10 feet of water, backwash one of the filters before starting a production run.		
		Normal operations SOP: If possible, avoid operating plant above 9.6 MGD.		
3	Submit report to the Board.	Develop report summarizing the historical filter performance for past three months, filter assessment results, and laboratory findings, and operational changes implemented to reduce IFE turbidity levels.	Plant manager	4/5/12
		Staff Meeting to discuss findings, develop staff recommendations, and finalize the report.	Plant staff and general manager	4/9/12
		Discuss the report conclusions (Filter No. 5 renovation; and the need for additional filtration capacity or three operating shifts) and the new SOPs with the Board President.	Plant manager and general manager	4/11/12
		Request approval to renovate Filter No. 5.	Board meeting	4/20/12

Step No.:	Activity:	Description:	By Whom:	By When:
4	Rebuild Filter No. 5.	Purchase required media and gravel.	General manager	5/15/12
		Remove old media and gravel.	contractor	5/15/12
		Check condition of underdrain and repair if necessary.	Engineer and contractor	6/1/12
		Install gravel and media.	Contractor with plant-manager inspection	06/15/12 (see note)

Note: If we cannot complete the renovation of Filter No. 5 by June 20, 2012, we must delay the project until the fall. Because we are currently limited to a 16-hour production day, we are unable to meet our maximum daily demand (which typically occurs in July or August) with only five filters.

Appendix G:
EXAMPLE OF A STANDARD OPERATING PROCEDURE FOR CONDUCTING A ROUTINE FILTER INSPECTION

This appendix contains an example of a standard operating procedure (SOP) based on an SOP developed by the staff at a surface water treatment plant (SWTP) in Texas. The SOP was developed during an on-site technical-assistance visit conducted as part of a TCEQ pilot project.

IMPORTANT

Do not use the example SOP until you have:

- reviewed the document
- customized the SOP to fit your specific plant;
- ensured that the SOP conforms with the existing standard operations, maintenance, and safety requirements of the water system;
- documented approval; and
- distributed it to plant staff.

City of Aguaville Surface Water Treatment Plant (SWTP)
EXAMPLE Standard Operating Procedure SOP No. 7
ROUTINE FILTER INSPECTIONS

Date Adopted: September 23, 1999

Date Revised: January 7, 2012

Background: This example standard operating procedure (SOP) is Number 7 in a coordinated series of SOPs for operating the City of Aguaville SWTP. SOPs 1 through 6 would cover topics such as:

- Routine filter backwash procedure
- Turbidity monitoring
- Disinfection level monitoring

Every SWTP should have SOPs that are kept up to date. All the operators should use the SOPs. That is how you can ensure that things are done the same way each time.

Reason for Revision: To reformat the SOP and add a pre-backwash filter-inspection step, and some additional safety precautions, and insert Equation 7.3.

Summary: This SOP contains the procedures for conducting a routine filter inspection. The procedures for conducting a variety of special filter studies are found in other SOPs. The process for conducting a routine filter inspection requires at least two staff members and involves a series of steps:

1. preparing a filter diagram;
2. partially draining the filter and measuring the filtration rate;
3. observing the (pre-backwash) condition of the filter media surface;
4. looking for any unusual conditions during a routine filter backwash;
5. draining the filter;
6. observing the (post-backwash) condition of the filter media surface;
7. making several filter bed measurements, including
    a. the levelness of the filter media surface,
    b. the depth of the filter media, and
    c. the levelness of the support gravel and underdrain;
8. excavating the media to identify any unusual filter conditions;
9. backwashing the filter again to
    a. restratify the media and
    b. measure the bed expansion and backwash water flow rate at the maximum backwash rate; and
10. returning the filter to service.

IMPORTANT

Use **extreme caution** to ensure operator safety, especially in the case of the large filters at Plant No. 2 where confined spaces and high backwash water flow rates exist. In addition, **extreme caution** is also required to prevent damage to the washwater troughs, filter underdrain and support gravel, and filter media.

Filter evaluations require a team of at least two licensed water works operators. At least one of the operators must hold a valid Class C Surface Water license.

Failure to comply with the requirements of this SOP is grounds for disciplinary action up to and including termination.

Equipment Needed:

One filter probe
One 1-inch wide tape measure or a 1-inch wide yardstick
Four 2 ft × 2 ft pieces of ¼-inch plywood
One 2 ft × 3 ft piece of ⅜-inch plywood
One stopwatch
One 8 ft to 10 ft length of 2 × 4
One 1 ft × 1 ft × 2.5 ft (H) plexiglass excavation box
One 2-inch diameter PVC filter-coring tool will be needed if special studies will be conducted following the routine inspection

Procedure:

Step 1—Prepare a Filter Diagram

Prepare a diagram of the filter showing the location of the filter inlets, outlets, and backwash trough. Although the diagram does not have to be exactly to scale, it is helpful if the diagram is drawn as large as possible and looks like the filter.

Step 2—Partially Draining the Filter and Measuring Filtration Rate

1. Close the filter influent valve completely.
2. Leave the filter effluent valve open.
3. Record the filtered-water flow rate from the filter's flowmeter.
4. Measure and record the amount of time that it takes for the water level to fall 6 inches. If possible, make this measurement while the water level is at least 6 inches above the top of the backwash trough. If the water level is not at least 6 inches above the top of the backwash trough, wait until the water level is below the top of the trough to begin the measurement.
5. Leave the filter effluent valve open until the water reaches the surface of the filter media.

Step 2—Partially Draining the Filter and Measuring Filtration Rate, continued

6. When the water reaches the surface of the filter media, take one of the two following actions:
   A. At Plant No. 1 (which does not have filter-to-waste facilities), leave the filter effluent valve open for three minutes after the water level reaches the surface of the filter media, and then completely close the valve.
   B. At Plant No. 2 (which does have filter-to-waste facilities):
      i. Completely close the filter effluent valve.
      ii. Open the filter-to-waste valve for eight minutes.
      iii. Completely close the filter-to-waste valve.
7. Determine and record the wetted surface area of the filter.
   A. If the drawdown was measured above the wash water trough, calculate the surface area of the filter.
   B. If the drawdown was measured below the top of the trough, determine the total area between the troughs.
8. Calculate the filtration rate using Equation 7.1 shown on the following page.
9. Compare the calculated filtration rate with the filtration rate shown on the filtered water flowmeter.

Equation 7.1: Calculating the filtration rate

$$\text{Filtration rate (gpm)} = \frac{\text{drawdown (inches)} \times \text{surface area (ft}^2) \times \left[\frac{\text{ft}}{12\text{ in}}\right] \times \left[\frac{7.48\text{ gal}}{\text{ft}^3}\right]}{\text{time (minutes)}}$$

$$= \frac{\text{drawdown (inches)} \times \text{surface area (ft}^2) \times 0.6233}{\text{time (minutes)}}$$

IMPORTANT

This part of the filter evaluation requires an operator to climb down into the filter. **Operators must take the following precautions to avoid injury and filter damage.**

1. At least two licensed operators must be present any time that an operator enters a filter. One of the operators must carefully enter the filter and make the measurements while the other remains outside the filter to record the data. Class D operators **may not** enter the filter.
2. Filter surfaces are often wet and slippery. Any operator who enters the filter must wear slip-resistant shoes.
3. We have designated all of the filters at Plant No. 2 as "confined spaces" because they are very deep filter boxes and some of them are partially covered. Consequently, any operator who enters those filters must:
    a. have a signed Confined Space Entry Request form prior to entering the filter,
    b. wear a safety harness, and
    c. be secured by a safety rope whenever he or she is inside the filter.
4. Operators are encouraged to take identical precautions when entering the filters at Plant No. 1.
5. Operators **must not** stand or walk in the fiberglass backwash troughs at Plant No. 1 because the troughs can be severely damaged.
6. The ¼-inch plywood boards **must** be used to distribute and support the weight of the operator whenever they are walking or standing on the filter media.

1. Lower the ladder into the filter using one of the following procedures:
    A. At Plant No. 1 (which uses lightweight fiberglass backwash troughs), the troughs **will not** support the weight of an individual. Consequently, the following procedure **must** be used on Filters No. 1–4:
    B. Lower the ⅜-inch plywood into the filter and place it directly on the filter media near the wall where the operator will enter. This board will then be used as the support footing for the ladder.
    C. Lower the ladder into the filter and center its feet on the piece of plywood.
    D. At Plant No. 2 (which has concrete backwash troughs), the troughs will support the weight of an individual. Consequently, when inspecting Filters No. 5–8, operators can either use the procedure described in item A above, or they can lower the ladder so that its feet are securely positioned directly in the backwash trough.

2. Secure the top of the ladder to the top of the filter or the filter railing using a strong rope or chain.
3. If a safety harness is being used, secure the end of the lanyard to the filter railing at a location where the operator standing outside the filter can reach it.
4. The operator who will be making the measurements must **carefully** enter the filter. The operator who will be recording the data **must** remain outside the filter as a safety precaution.
5. Lower the tape measure, the ¼-inch plywood pieces, the straight 2 × 4, and other equipment into the filter.
6. Observe the surface of the filter media for the following media conditions.
    A. **Thickness of the floc mat:** Measure the thickness of the floc mat at several locations throughout the filter.
    B. **Distribution of floc mat:** Specifically, look for areas where the floc has accumulated to an unusual depth or has not accumulated to the same degree as in the rest of the filter.
    C. **Mudballs:** Specifically, look for areas where mudballs appear to be accumulating on the surface of the media.
    D. **Significant media mounds or depressions:** Specifically, look for areas where the depressions or mounds exceed 1½ inches in depth or height.
    E. **Filter cracks:** Specifically, look for cracks that are more than 6 inches long, more than ¼-inch wide, or more than ½-inch or so deep. Some small cracks may form as the filter dewaters, but larger cracks suggest that the filter media has been coated with an excessive coagulant layer.
    F. **Separation from filter wall:** Specifically, look for areas where the media has separated from the wall more than ¼ inch, the length of the separation exceeds 6–8 inches, or the separation is more than 1 inch deep. Some separation from the filter wall may occur as the filter dewaters, but separations that exist before the filters dewater suggest that the filter media has been coated with an excessive coagulant layer.
7. On the filter diagram, record the location of any unusual conditions seen on the media surface and describe the condition in detail on a separate sheet of paper.
8. Remove any equipment that was taken into the filter.
9. Exit the filter and remove the ladder and the ¼-inch plywood piece if it was used.

Step 4—Looking for Unusual Conditions during a Backwash Cycle

1. Make sure that none of the equipment used while observing the filter media surface during Step 3 remains in the filter.
2. Open the filter backwash valve **slightly** and allow that water to rise to 6–8 inches below the bottom of the backwash-water trough.

Step 4—Looking for Unusual Conditions during a Backwash Cycle, continued

3. Complete a routine backwash of the filter following the backwash procedure in the City's other SOPs describing routine filter backwash procedures. During the backwash cycle, observe the condition of the filter for the following unusual backwash conditions:
    A. **Levelness of the backwash trough:** Specifically, look at the top of the backwash water troughs to determine if water flows over some sections of the trough sooner than others.
    B. **Trough flooding:** Specifically, look for areas where flooding is occurring in one or more of the troughs.
    C. **Media boils and jets:** Specifically, look for areas where the backwash is producing a significantly more vigorous rolling action in the media. Pay particular attention to areas along the filter wall.
    D. **Media loss:** Specifically, look for media carryover into the backwash water troughs. Pay particular attention to areas where the carryover appears to be localized.
    E. **Lack of media agitation:** Specifically, look for areas where the media is moving very little. Again, pay particular attention to the areas along the filter wall and in the corners of the filter.
4. Record the location of any undesirable backwash conditions on the filter diagram, and describe the condition in detail on a separate sheet of paper.
5. Record the turbidity level of the spent backwash water at the end of the backwash cycle.

Step 5—Draining the Filter

1. Make sure that the influent and filter backwash are completely closed.
2. Open the filter effluent valve and wait approximately 45 minutes to allow the filter to completely discharge to the clearwell.
3. At Plant No. 2 (which is equipped with filter-to-waste facilities), open the filter-to-waste valve after 15 minutes.

Step 6—Observing the (Post-Backwash) Surface of the Filter Media

1. Repeat the filter-surface-inspection process described in Step 3.
2. Using the filter diagram, record the location of any unusual conditions seen on the media surface, and describe the condition in detail on a separate sheet of paper.

Step 7—Filter-Bed Measurements

IMPORTANT

Avoid injury; be safe. This part of the filter evaluation requires an operator to climb down into the filter. Operators must take the following precautions to avoid injury and filter damage.

1. At least two licensed operators must be present any time that an operator enters a filter. One of the operators must carefully enter the filter and make the measurements while the other remains outside the filter to record the data. Class D operators may not enter the filter.
2. Filter surfaces are often wet and slippery. Any operator who enters the filter must wear slip-resistant shoes.
3. We have designated all of the filters at Plant No. 2 as "confined spaces" because they are very deep filter boxes and some of them are partially covered. Consequently, any operator who enters those filters must:
   a. have a signed Confined Space Entry Request form prior to entering the filter,
   b. wear a safety harness, and
   c. be secured by a safety rope whenever he or she is inside the filter.
4. Operators are encouraged to take identical precautions when entering the filters at Plant No. 1.
5. Operators **must not** stand or walk in the fiberglass backwash troughs at Plant No. 1 because the troughs can be severely damaged.
6. The ¼-inch plywood boards **must** be used to distribute and support the weight of the operator whenever they are walking or standing on the filter media.

1. Close the filter effluent valve.
2. Lower the ladder into the filter using one of the following procedures:
   A. At Plant No. 1 (which uses lightweight fiberglass backwash troughs), the troughs **will not** support the weight of an individual. Consequently, the following procedure **must** be used at Plant No. 1:
      i. Lower the ⅜-inch plywood into the filter and place it directly on the filter media near the wall where the operator will enter. This board will then be used as the support footing for the ladder.
      ii. Lower the ladder into the filter and center its feet on the piece of plywood.
   B. At Plant No. 2 (which has concrete backwash troughs), the troughs will support the weight of an individual. Consequently, the operators can either use the procedure described in item A above, or they can lower the ladder so that its feet are securely positioned directly in the backwash trough.
3. Secure the top of the ladder to the top of the filter or the filter railing using a strong rope or chain.
4. If a safety harness is being used, secure the end of the lanyard to the filter railing at a location where the operator standing outside the filter can reach it.
5. The operator who will be making the measurements must **carefully** enter the filter. The operator who will be recording the data **must** remain outside the filter as a safety precaution.
6. Lower (do not drop) the filter probe, the straight 2 × 4, the ¼-inch plywood pieces, and other equipment into the filter.

Notes

1. Lay the straight 2 × 4 across the tops of adjacent troughs so that it spans the space between the troughs and provides a reference point for the measurements between the filter troughs.
2. Operators **must not** stand or walk directly on the surface of the filter media.
   a. At Plant No. 1 (which has fiberglass troughs), the operator **must** conduct the procedure while standing on the ¼-inch plywood pieces placed directly on the filter bed.
   b. At Plant No. 2 (which has concrete backwash troughs), the operator can either make the measurements while standing and walking in the troughs or by using the method described for plant No. 1 above. However, if the operator cannot reach the area between the troughs, the Plant No. 1 method must be used.

7. Keeping the probe perpendicular, probe the filter at two-foot intervals.
   A. Determine the levelness of the media surface by measuring the distance from the top of the filter trough to the surface of the media.
      i. Lower the probe until it just touches the top of the filter media.
      ii. Record the distance (to the nearest inch or less) directly on the filter diagram.
   B. Measure the depth of the media bed to the top of the gravel support layer or, if the filter uses a gravel-less underdrain, to the top of the underdrain.

IMPORTANT:
Do not push the probe into the gravel layer. Be **extremely** careful not to press the probe so far down that it damages the filter underdrain.

      i. Press the probe down into the media until a change in resistance is felt or until the sound of the probe passing through the media changes.
      ii. Record the depth (to the nearest inch or less) directly on the filter diagram.
8. Determine levelness of the support gravel/underdrain.
   A. Either:
      i. measure the distance from the top of the backwash trough to the surface of the support gravel or gravel-less underdrain; or
      ii. measure the depth of the media layer and the distance from the media surface to the top of the backwash trough and add the two readings.
   B. Record the result directly on the filter diagram.
9. Reduce the interval if significant differences are detected between adjacent measurements for either (1) the distance to the media surface, or (2) the media depth.
   A. If the distance or depth between adjacent measurements varies by more than 2 inches vertically, make an additional set of measurements at the midpoint of the two points.
   B. If the distance or depth continues to vary by more than two inches vertically, continue to measure at midpoints until the distance between the measurements is only three inches horizontally.
10. Probe the filter at each site where an undesirable filter backwash or media-surface condition was identified.

Step 8—Excavating the Filter

IMPORTANT:

Be safe. Operators must take some extremely important precautions to avoid injury and filter damage.

1. Operators must comply with all of the safety requirements described in Step 7.
2. Do not disturb the gravel support bed when excavating the media at each site.
   a. Excavation at each site must be stopped as soon as the operator detects small gravel (that is, ¼- to ⅛-inch gravel).
   b. The upper 75% of the filter bed can be excavated by hand or with a small shovel.
   c. The lower 25% of the filter bed **must** be excavated by hand.
3. Do not walk or stand directly on the filter media.
4. If the filter design does not allow the filter to be completely drained, do not attempt excavation below the remaining water level without an excavation box.

Notes:

1. During the filter excavation, note and record the following information:
   a. If mudballs are present, note their size and shape and how far they have penetrated into the media bed.
   b. If the filter contains more than one type of media, note how distinct the interface is between the different media layers, that is, the degree of stratification.
   c. If the filter contains more than one type of media, note how much intermixing of the media layers is present.
2. If the excavation cannot be completed because of the presence of subsurface standing water or other conditions that cause the walls of the excavation hole to collapse, it may be useful, or even necessary, to use the excavation box. **Do not force the excavation box so deep that it penetrates into the gravel layer.**

1. Make sure that all of the filter bed measurement activities required in Step 7 have been completed.
2. Place the ¼-inch plywood pieces on the filter media about a foot from the area to be excavated.
3. Clean a 3 ft^2 area on the opposite side of the excavation site by scraping off the top ¼-inch of filter media and placing it in a pile on one end of the scraped area.
4. Excavate a 6- to 8-inch diameter hole in the filter bed.
5. Excavate the top 3 to 6 inches of the media bed.
   A. If mudballs are present, note their size and shape and the depth of penetration.
   B. Place the excavated media in a pile at one end of the scraped area.
6. Excavate the remainder of the upper media layer.
7. If mudballs are present, note their size and shape and the depth of penetration. For example, “pancake-shaped mudballs with a diameter of ½ to ¾ inches have penetrated three inches into the anthracite layer.”
8. Place this layer of excavated media in a pile adjacent to the previous pile.

Step 8—Excavating the Filter, continued

9. If the filter contains multiple media materials, describe the interface between the layers. For example, "14 inches of clean anthracite is located above a 2-inch layer of intermixed sand and anthracite that contains about 40% sand and 60% anthracite."
10. If the filter bed contains more than one media layer, continue the excavation—that is, repeat step 5 until all the layers between the surface of the media and the upper gravel layer have been excavated and described.

IMPORTANT:
Stop the excavation as soon as the samples contain more than about 10% gravel; **do not** excavate the gravel layer.

11. Replace the media after completing the excavation.
    A. Return the media to the hole in the opposite order that it was removed. That means last out = first in.
    B. Pack each layer slightly by hand as it is replaced.
    C. If there is media left over after filling the excavation hole, spread it around in the general area of the excavation site and the cleared area.
12. Repeat steps 1–7 in each area where unusual backwash or media conditions were observed or noted during the media probing.
13. Collect "Core Samples" as described in the SWTP's other SOPs that describe how to perform special filter studies if any special studies are to be conducted on the filter media.
14. Remove the filter probe, tape measure, plywood squares, and any other equipment from the filter.
15. Close the filter-to-waste valve.

Step 9—Measuring Bed Expansion and Backwash Water Flow Rate

IMPORTANT

During the backwash process, large volumes of water are used and high water velocities exist in the backwash troughs and spent backwash water channel. Consequently, whenever possible, the evaluation team should collect the data required in this step without being in the filter during the backwash cycle. **However, if an operator needs to be in the filter during a backwash cycle, the following precautions must be taken to avoid injury.**

1. At least two licensed operators must present any time that an operator enters a filter. One of the operators must carefully enter the filter and make the measurements while the other remains outside the filter to record the data. Class D operators may **not** enter the filter.
2. Filter surfaces are often wet and slippery—any operator who enters the filter must wear slip-resistant shoes.
3. Any operator who is inside the filter box during a backwash procedure must wear a safety harness that is securely anchored to the filter wall or some other similarly immovable object. The lanyard, or safety rope, must be short enough to prevent the operator from becoming submerged in the filter bed, backwash trough, or spent backwash water channel.
4. Operators must stand at a location that will minimize the possibility of injury of filter damage.
    a. At Plant No. 1, the operators must stand on the top of the wall of the spent-backwash-water channel. Operators **must not** stand on the top of fiberglass backwash troughs at Plant No. 1 because they can be severely damaged.
    b. At Plant No. 2, the operator may either stand on the top of the wall of the spent-backwash-water channel or on the top of a backwash trough where it connects to the wall of the filter box.

1. Make sure that all of the filter excavation activities required in Step 8 have been completed.
2. The operator who will be making the measurements must get the Secchi disk. The operator who will be recording the data **must** remain outside the filter as a safety precaution.
3. Find a place to stand that has good footing, and use the lanyard to secure the safety harness to the filter wall or other similarly immovable object.
4. Remove the ladder and the ⅜-inch plywood piece if it was used.
5. Complete a routine backwash of the filter following the backwash procedure in this example facility's SOP for routine filter backwash procedures.
6. Determine if there are still any unusual backwash conditions that were observed in Step 4. If there are, record their location on the filter diagram.
7. Measure the height of the expanded media bed at the maximum backwash flow rate routinely used during the backwash cycle.
    A. Lower a Secchi disk into the filter media until a small amount of filter media from the expanded bed begins collecting on the top of the disk.
    B. Measure the distance from the top of the filter wall to the surface of the fluidized (that is, expanded) media bed.
    C. Record the result on the filter diagram.

Step 9—Measuring Bed Expansion and Backwash Water Flow Rate, continued

8. Measure the maximum backwash-water flow rate routinely used to backwash the filters.
    A. At the maximum backwash-water flow rate, record the flow rate that is being shown on the backwash-water flowmeter.
    B. At the maximum backwash-water flow rate, close the backwash waste drain valve.
    C. Measure and record the amount of time that it takes for the water level to rise 6 inches.
    D. Open the backwash waste valve.
9. Complete the backwash cycle as described in the WSC's routine filter backwash SOP.
10. Return the filter to service using the procedure described in the WSC's routine filter backwash SOP.
11. Measure the height of the unexpanded filter bed using the same process as described in item 7.
12. Lower the ladder into the filter using one of the following procedures:
    A. At Plant No. 1 (which uses lightweight fiberglass backwash troughs), the troughs **will not** support the weight of an individual. Consequently, the following procedure **must** be used on Filters No. 1–4:
        i. Lower the ⅜-inch plywood into the filter and place it directly on the filter media near the wall where the operator will enter. This board will then be used as the support footing for the ladder.
        ii. Lower the ladder into the filter and center its feet on the piece of plywood.
    B. At Plant No. 2 (which has concrete backwash troughs), the troughs will support the weight of an individual. Consequently, when inspecting Filters No. 5–8, operators can either use the procedure described in item A above, or they can lower the ladder so that its feet are securely positioned directly in the backwash trough.
13. Secure the top of the ladder to the top of the filter or the filter railing using a strong rope or chain.
14. Take the Secchi disk, carefully exit the filter, and remove the ladder and the ⅜-inch plywood piece if it was used.
15. Calculate backwash water flow rate using equation 7.2.

Equation 7.2: Calculating the backwash water flow rate

$$\text{Backwash rate (gpm)} = \frac{\text{rise (inches)} \times \text{surface area (ft}^2\text{)} \times \left[\frac{\text{ft}}{12\text{ in}}\right] \times \left[\frac{7.48\text{ gal}}{\text{ft}^3}\right]}{\text{time (minutes)}}$$

$$= \frac{\text{rise (inches)} \times \text{surface area (ft}^2\text{)} \times 0.6233}{\text{time (minutes)}}$$

Step 9—Measuring Bed Expansion and Backwash Water Flow Rate, continued

Calculate the percent bed expansion using equation 7.3.

Equation 7.3: Calculating the percent bed expansion

$$\%\ Expansion = \frac{\text{“height” of unexpanded bed (inches)} - \text{“height” of expanded bed (inches)}}{\text{total depth of media bed (inches)}} \times 100$$

------ End of Example SWTP SOP No. 7—Routine Filter Inspections -----

Appendix H:
EXAMPLE OF A COMPLETED CPE-REQUEST FORM

COMPREHENSIVE PERFORMANCE EVALUATION REQUEST FORM

FOR PUBLIC WATER SYSTEMS THAT ARE USING SURFACE WATER SOURCES OR GROUND WATER SOURCES UNDER THE INFLUENCE OF SURFACE WATER THAT ARE REQUIRED TO CONDUCT A COMPREHENSIVE PERFORMANCE EVALUATION

PUBLIC WATER SYSTEM NAME: Aguaville WSC PWS ID No.: 9876543

PLANT NAME OR NUMBER: Schulze Surface Water Treatment Plant

EVENTS THAT TRIGGERED THE CPE REQUEST

EVENT NUMBER 1		EVENT NUMBER 2	
Filter Number:	5	Filter Number:	3
Date of Event:	April 5, 2011	Date of Event:	May 13, 2011
FAR Prepared?		FAR Prepared?	
CAP Prepared?		CAP Prepared?	

PUBLIC WATER SYSTEM PREFERENCES

PREFERRED DATES FOR CPE:

(1) Week of: June 10, 2011
(2) Week of: June 17, 2011
(3) Week of: July 15, 2011

ADMINISTRAVE CONTACT INFORMATION:		PLANT CONTACT INFORMATION:	
Name:	Haile Paide	Name:	Mas Papeleo
Title:	General Manager	Title:	Plant Superintendent
Phone:	(123) 456-7890	Phone:	(123) 456-8907
Fax:	(123) 456-7809	Fax:	(123) 456-7809
Address:	Aguaville WSC RR 4, Box Z Aguaville, TX 78900	Address:	Aguaville WSC RR 5, Box A Aguaville, TX 78900

I certify that I am familiar with the information contained in this report and that, to the best of my knowledge, the information is true, complete, and accurate.

Operator's Signature: _____ Date: May 12, 2011

Name (printed): Haile Paide

If applicable, Certificate No. and Class: NA

The request must be submitted with your Monthly Operational Report and a copy should be faxed to the Drinking Water Section at (512) 239-6050 as soon as it is signed.

TCEQ/WSD/Public

Reserved for TCEQ Use Only

TCEQ - 10278 (01-22-02)

CPE Request Form