HOMESTEAD PHASE 3

CONTRIBUTING ZONE PLAN

Prepared For:

Mr. Rich Christiano
Gehan Homes
3815 S. Capital of Texas Hwy
Suite 275, Barton Creek Plaza III
Austin, Texas 78704

8-26-20

STATE OF TEXAS
LEE A. WHITED
102471
LICENSED
PROFESSIONAL ENGINEER
CBD, Inc.
F-3791

Prepared By:

CARLSON, BRIGANCE & DOERING, INC.
5501 West William Cannon Drive
Austin, Texas 78749
(512) 280-5160

CBD No. 5172
August 2020

Texas Commission on Environmental Quality

Edwards Aquifer Application Cover Page

Our Review of Your Application

The Edwards Aquifer Program staff conducts an administrative and technical review of all applications. The turnaround time for administrative review can be up to 30 days as outlined in 30 TAC 213.4(e). Generally administrative completeness is determined during the intake meeting or within a few days of receipt. The turnaround time for technical review of an administratively complete Edwards Aquifer application is 90 days as outlined in 30 TAC 213.4(e). Please know that the review and approval time is directly impacted by the quality and completeness of the initial application that is received. In order to conduct a timely review, it is imperative that the information provided in an Edwards Aquifer application include final plans, be accurate, complete, and in compliance with 30 TAC 213.

Administrative Review

1. Edwards Aquifer applications must be deemed administratively complete before a technical review can begin. To be considered administratively complete, the application must contain completed forms and attachments, provide the requested information, and meet all the site plan requirements. The submitted application and plan sheets should be final plans. Please submit one full-size set of plan sheets with the original application, and half-size sets with the additional copies.

   To ensure that all applicable documents are included in the application, the program has developed tools to guide you and web pages to provide all forms, checklists, and guidance. Please visit the below website for assistance: http://www.tceq.texas.gov/field/eapp.

2. This Edwards Aquifer Application Cover Page form (certified by the applicant or agent) must be included in the application and brought to the administrative review meeting.

3. Administrative reviews are scheduled with program staff who will conduct the review. Applicants or their authorized agent should call the appropriate regional office, according to the county in which the project is located, to schedule a review. The average meeting time is one hour.

4. In the meeting, the application is examined for administrative completeness. Deficiencies will be noted by staff and emailed or faxed to the applicant and authorized agent at the end of the meeting, or shortly after. Administrative deficiencies will cause the application to be deemed incomplete and returned.

   An appointment should be made to resubmit the application. The application is re-examined to ensure all deficiencies are resolved. The application will only be deemed administratively complete when all administrative deficiencies are addressed.

5. If an application is received by mail, courier service, or otherwise submitted without a review meeting, the administrative review will be conducted within 30 days. The applicant and agent will be contacted with the results of the administrative review. If the application is found to be administratively incomplete, it can be retrieved from the regional office or returned by regular mail. If returned by mail, the regional office may require arrangements for return shipping.

6. If the geologic assessment was completed before October 1, 2004 and the site contains "possibly sensitive" features, the assessment must be updated in accordance with the *Instructions to Geologists* (TCEQ-0585 Instructions).

Technical Review

1. When an application is deemed administratively complete, the technical review period begins. The regional office will distribute copies of the application to the identified affected city, county, and groundwater conservation district whose jurisdiction includes the subject site. These entities and the public have 30 days to provide comments on the application to the regional office. All comments received are reviewed by TCEQ.

2. A site assessment is usually conducted as part of the technical review, to evaluate the geologic assessment and observe existing site conditions. The site must be accessible to our staff. The site boundaries should be clearly marked, features identified in the geologic assessment should be flagged, roadways marked and the alignment of the Sewage Collection System and manholes should be staked at the time the application is submitted. If the site is not marked the application may be returned.
3. We evaluate the application for technical completeness and contact the applicant and agent via Notice of Deficiency (NOD) to request additional information and identify technical deficiencies. There are two deficiency response periods available to the applicant. There are 14 days to resolve deficiencies noted in the first NOD. If a second NOD is issued, there is an additional 14 days to resolve deficiencies. If the response to the second notice is not received, is incomplete or inadequate, or provides new information that is incomplete or inadequate, the application must be withdrawn or if not withdrawn the application will be denied and the application fee will be forfeited.
4. The program has 90 calendar days to complete the technical review of the application. If the application is technically adequate, such that it complies with the Edwards Aquifer rules, and is protective of the Edwards Aquifer during and after construction, an approval letter will be issued. Construction or other regulated activity may not begin until an approval is issued.

Mid-Review Modifications

It is important to have final site plans prior to beginning the permitting process with TCEQ to avoid delays.

Occasionally, circumstances arise where you may have significant design and/or site plan changes after your Edwards Aquifer application has been deemed administratively complete by TCEQ. This is considered a "Mid-Review Modification". Mid-Review Modifications may require redistribution of an application that includes the proposed modifications for public comment.

If you are proposing a Mid-Review Modification, two options are available to you:

- You can withdraw your application, and your fees will be refunded or credited for a resubmittal.
- TCEQ can continue the technical review of the application as it was submitted, and a modification application can be submitted at a later time.

If the application is withdrawn, the resubmitted application will be subject to the administrative and technical review processes and will be treated as a new application. The application will be redistributed to the effected jurisdictions.

Please contact the regional office if you have questions. If your project is located in Williamson, Travis, or Hays County, contact TCEQ's Austin Regional Office at 512-339-2929. If your project is in Comal, Bexar, Medina, Uvalde, or Kinney County, contact TCEQ's San Antonio Regional Office at 210-490-3096

Please fill out all required fields below and submit with your application.

1. Regulated Entity Name: Homestead Phase 3					**2. Regulated Entity No.:110763786**			
3. Customer Name: Gehan Homes					**4. Customer No.: 601574049**			
5. Project Type: (Please circle/check one)	New	Modification			Extension		Exception	
6. Plan Type: (Please circle/check one)	WPAP	CZP	SCS	UST	AST	EXP	EXT	Technical Clarification	Optional Enhanced Measures
7. Land Use: (Please circle/check one)	Residential	Non-residential				**8. Site (acres):**		18.21
9. Application Fee:	$4000	**10. Permanent BMP(s):**				Pond B		
11. SCS (Linear Ft.):		**12. AST/UST (No. Tanks):**						
13. County:	Williamson	**14. Watershed:**				North Fork Brushy Creek		

Application Distribution

Instructions: Use the table below to determine the number of applications required. One original and one copy of the application, plus additional copies (as needed) for each affected incorporated city, county, and groundwater conservation district are required. Linear projects or large projects, which cross into multiple jurisdictions, can require additional copies. Refer to the "Texas Groundwater Conservation Districts within the EAPP Boundaries" map found at:

http://www.tceq.texas.gov/assets/public/compliance/field_ops/eapp/EAPP%20GWCD%20map.pdf

For more detailed boundaries, please contact the conservation district directly.

Austin Region			
County:	**Hays**	**Travis**	**Williamson**
Original (1 req.)	__	__	1
Region (1 req.)	__	__	1
County(ies)	__	__	1
Groundwater Conservation District(s)	__Edwards Aquifer Authority __Barton Springs/ Edwards Aquifer __Hays Trinity __Plum Creek	__Barton Springs/ Edwards Aquifer	NA
City(ies) Jurisdiction	__Austin __Buda __Dripping Springs __Kyle __Mountain City __San Marcos __Wimberley __Woodcreek	__Austin __Bee Cave __Pflugerville __Rollingwood __Round Rock __Sunset Valley __West Lake Hills	__Austin __Cedar Park __Florence __Georgetown __Jerrell 1 Leander __Liberty Hill __Pflugerville __Round Rock

San Antonio Region					
County:	**Bexar**	**Comal**	**Kinney**	**Medina**	**Uvalde**
Original (1 req.)	__	__	__	__	__
Region (1 req.)	__	__	__	__	__
County(ies)	__	__	__	__	__
Groundwater Conservation District(s)	__ Edwards Aquifer Authority __Trinity-Glen Rose	__Edwards Aquifer Authority	__Kinney	__EAA __Medina	__EAA __Uvalde
City(ies) Jurisdiction	__Castle Hills __Fair Oaks Ranch __Helotes __Hill Country Village __Hollywood Park __San Antonio (SAWS) __Shavano Park	__Bulverde __Fair Oaks Ranch __Garden Ridge __New Braunfels __Schertz	NA	__San Antonio ETJ (SAWS)	NA

I certify that to the best of my knowledge, that the application is complete and accurate. This application is hereby submitted to TCEQ for administrative review and technical review.

Lee A. Whited

Print Name of Customer/Authorized Agent

8-26-20

Signature of Customer/Authorized Agent — Date

FOR TCEQ INTERNAL USE ONLY			
Date(s)Reviewed:		Date Administratively Complete:	
Received From:		Correct Number of Copies:	
Received By:		Distribution Date:	
EAPP File Number:		Complex:	
Admin. Review(s) (No.):		No. AR Rounds:	
Delinquent Fees (Y/N):		Review Time Spent:	
Lat./Long. Verified:		SOS Customer Verification:	
Agent Authorization Complete/Notarized (Y/N):		Fee Check:	Payable to TCEQ (Y/N):
Core Data Form Complete (Y/N):			Signed (Y/N):
Core Data Form Incomplete Nos.:			Less than 90 days old (Y/N):

TABLE OF CONTENTS

I. Contributing Zone Plan Application (TCEQ-10257)

ATTACHMENT A - Road Map
ATTACHMENT B - USGS Quadrangle Map
ATTACHMENT C - Project Narrative
ATTACHMENT D - Factors Affecting Surface Water Quality
ATTACHMENT E - Volume and Character of Stormwater
ATTACHMENT J - BMPs for Upgradient Stormwater
ATTACHMENT K - BMPs for On-site Stormwater
ATTACHMENT L - BMPs for Surface Streams
ATTACHMENT M - Construction Plans
ATTACHMENT N - Inspection, Maintenance, Repair and Retrofit Plan
ATTACHMENT P - Measures for Minimizing Surface Stream Contamination

II. Water Quality Design

III. Temporary Stormwater (TCEQ-0602)

ATTACHMENT A – Spill Response Actions
ATTACHMENT B – Potential Sources of Contamination
ATTACHMENT C – Sequence of Major Activities
ATTACHMENT D – Temporary Best Management Practices and Measures
ATTACHMENT E – Request to Temporarily Seal a Fracture, if sealing a feature
ATTACHMENT F – Structural Practices
ATTACHMENT G – Drainage Area Map – See Construction Plans
ATTACHMENT H – Temporary Sediment Pond(s) Plans and Calculations See Construction Plans
ATTACHMENT I – Inspection and Maintenance for BMPs
ATTACHMENT J – Schedule of Interim and Permanent Soil Stabilization Practices

IV. Agent Authorization Form (TCEQ-0599), if application submitted by agent

V. Application Fee Form (TCEQ-0574)

VI. Core Data Form (TCEQ-10400)

*Edwards Aquifer Application Cover Page

*Check Payable to TCEQ

I. CZP APPLICATION

Contributing Zone Plan Application

Texas Commission on Environmental Quality

for Regulated Activities on the Contributing Zone to the Edwards Aquifer and Relating to 30 TAC §213.24(1), Effective June 1, 1999

To ensure that the application is administratively complete, confirm that all fields in the form are complete, verify that all requested information is provided, consistently reference the same site and contact person in all forms in the application, and ensure forms are signed by the appropriate party.

Note: Including all the information requested in the form and attachments contributes to more streamlined technical reviews.

Signature

To the best of my knowledge, the responses to this form accurately reflect all information requested concerning the proposed regulated activities and methods to protect the Edwards Aquifer. This **Contributing Zone Plan Application** is hereby submitted for TCEQ review and Executive Director approval. The application was prepared by:

Print Name of Customer/Agent: Lee A. Whited

Date: 08-11-2020

Signature of Customer/Agent:

Regulated Entity Name: Homestead Phase 3

Project Information

1. County: Williamson
2. Stream Basin: Tributary to North Fork Brushy Creek
3. Groundwater Conservation District (if applicable): _____
4. Customer (Applicant):

   Contact Person: Rich Christiano
   Entity: Gehan Homes
   Mailing Address: 3815 S. Capital of Texas Hwy, Suite 275, Barton Creek Plaza III
   City, State: Austin, TX Zip: 78704
   Telephone: 512-330-9366 Fax: _____
   Email Address: sbarkdale@gehanhomes.com

5. Agent/Representative (If any):

Contact Person: Lee A. Whited
Entity: Carlson, Brigance, & Doering, Inc.
Mailing Address: 5501 West William Cannon Drive
City, State: Austin, TX Zip: 78749
Telephone: 512-280-5160 Fax: 512-583-0903
Email Address: lee@cbdeng.com

6. Project Location:

☒ The project site is located inside the city limits of Leander.
☐ The project site is located outside the city limits but inside the ETJ (extra-territorial jurisdiction) of _____.
☐ The project site is not located within any city's limits or ETJ.

7. ☒ The location of the project site is described below. Sufficient detail and clarity has been provided so that the TCEQ's Regional staff can easily locate the project and site boundaries for a field investigation.

Approximately 1800 ft North of the intersection of CR 279 and Collaborative Way.
Lat. 30.60357° Long. -97.8903°

8. ☒ **Attachment A - Road Map**. A road map showing directions to and the location of the project site is attached. The map clearly shows the boundary of the project site.

9. ☒ **Attachment B - USGS Quadrangle Map**. A copy of the official 7 ½ minute USGS Quadrangle Map (Scale: 1" = 2000') is attached. The map(s) clearly show:

☒ Project site boundaries.
☒ USGS Quadrangle Name(s).

10. ☒ **Attachment C - Project Narrative**. A detailed narrative description of the proposed project is attached. The project description is consistent throughout the application and contains, at a minimum, the following details:

☒ Area of the site
☒ Offsite areas
☒ Impervious cover
☒ Permanent BMP(s)
☒ Proposed site use
☒ Site history
☐ Previous development
☐ Area(s) to be demolished

11. Existing project site conditions are noted below:

☐ Existing commercial site
☐ Existing industrial site

- ☐ Existing residential site
- ☐ Existing paved and/or unpaved roads
- ☒ Undeveloped (Cleared)
- ☐ Undeveloped (Undisturbed/Not cleared)
- ☐ Other: _____

12. The type of project is:

- ☒ Residential: # of Lots: 21
- ☐ Residential: # of Living Unit Equivalents: _____
- ☐ Commercial
- ☐ Industrial
- ☐ Other: _____

13. Total project area (size of site): 18.21 Acres

    Total disturbed area: 11.18 Acres

14. Estimated projected population: 74

15. The amount and type of impervious cover expected after construction is complete is shown below:

Table 1 - Impervious Cover

Impervious Cover of Proposed Project	*Sq. Ft.*	*Sq. Ft./Acre*	*Acres*
Structures/Rooftops	77,500	÷ 43,560 =	1.78
Parking	0	÷ 43,560 =	0
Other paved surfaces	101,892	÷ 43,560 =	2.34
Total Impervious Cover	179,392	÷ 43,560 =	4.12

Total Impervious Cover 4.12 **÷ Total Acreage** 18.21 **X 100 =** 22.6**% Impervious Cover**

16. ☒ **Attachment D - Factors Affecting Surface Water Quality**. A detailed description of all factors that could affect surface water quality is attached. If applicable, this includes the location and description of any discharge associated with industrial activity other than construction.

17. ☒ Only inert materials as defined by 30 TAC 330.2 will be used as fill material.

For Road Projects Only

Complete questions 18 - 23 if this application is exclusively for a road project.

☐ N/A

18. Type of project:

- ☐ TXDOT road project.
- ☐ County road or roads built to county specifications.
- ☐ City thoroughfare or roads to be dedicated to a municipality.
- ☐ Street or road providing access to private driveways.

19. Type of pavement or road surface to be used:

- ☐ Concrete
- ☐ Asphaltic concrete pavement
- ☐ Other: _____

20. Right of Way (R.O.W.):

Length of R.O.W.: _____ feet.
Width of R.O.W.: _____ feet.
L x W = _____Ft^2 ÷ 43,560 Ft^2/Acre = _____ acres.

21. Pavement Area:

Length of pavement area: _____ feet.
Width of pavement area: _____ feet.
L x W = _____Ft^2 ÷ 43,560 Ft^2/Acre = _____ acres.
Pavement area _____ acres ÷ R.O.W. area _____ acres x 100 = _____% impervious cover.

22. ☐ A rest stop will be included in this project.

☐ A rest stop will not be included in this project.

23. ☐ Maintenance and repair of existing roadways that do not require approval from the TCEQ Executive Director. Modifications to existing roadways such as widening roads/adding shoulders totaling more than one-half (1/2) the width of one (1) existing lane require prior approval from the TCEQ.

Stormwater to be generated by the Proposed Project

24. ☒ **Attachment E - Volume and Character of Stormwater**. A detailed description of the volume (quantity) and character (quality) of the stormwater runoff which is expected to occur from the proposed project is attached. The estimates of stormwater runoff quality and quantity are based on area and type of impervious cover. Include the runoff coefficient of the site for both pre-construction and post-construction conditions.

Wastewater to be generated by the Proposed Project

25. ☐ Wastewater is to be discharged in the contributing zone. Requirements under 30 TAC §213.6(c) relating to Wastewater Treatment and Disposal Systems have been satisfied.

☐ N/A

26. Wastewater will be disposed of by:

☐ On-Site Sewage Facility (OSSF/Septic Tank):

☐ **Attachment F - Suitability Letter from Authorized Agent.** An on-site sewage facility will be used to treat and dispose of the wastewater from this site. The appropriate licensing authority's (authorized agent) written approval is attached. It states that the land is suitable for the use of private sewage facilities and will meet or exceed the requirements for on-site sewage facilities as specified under 30 TAC Chapter 285 relating to On-site Sewage Facilities.

☐ Each lot in this project/development is at least one (1) acre (43,560 square feet) in size. The system will be designed by a licensed professional engineer or registered sanitarian and installed by a licensed installer in compliance with 30 TAC Chapter 285.

☒ Sewage Collection System (Sewer Lines):
The sewage collection system will convey the wastewater to the City of Leander (name) Treatment Plant. The treatment facility is:

☒ Existing.
☐ Proposed.

☐ N/A

Permanent Aboveground Storage Tanks(ASTs) ≥ 500 Gallons

Complete questions 27 - 33 if this project includes the installation of AST(s) with volume(s) greater than or equal to 500 gallons.

☐ N/A

27. Tanks and substance stored:

Table 2 - Tanks and Substance Storage

AST Number	*Size (Gallons)*	*Substance to be Stored*	*Tank Material*
1			
2			
3			
4			
5			

Total x 1.5 = _____ Gallons

28. ☐ The AST will be placed within a containment structure that is sized to capture one and one-half (1 1/2) times the storage capacity of the system. For facilities with more than

one tank system, the containment structure is sized to capture one and one-half (1 1/2) times the cumulative storage capacity of all systems.

☐ **Attachment G - Alternative Secondary Containment Methods**. Alternative methods for providing secondary containment are proposed. Specifications showing equivalent protection for the Edwards Aquifer are attached.

29. Inside dimensions and capacity of containment structure(s):

Table 3 - Secondary Containment

Length (L)(Ft.)	*Width(W)(Ft.)*	*Height (H)(Ft.)*	*L x W x H = (Ft3)*	*Gallons*

Total: _____ Gallons

30. Piping:

☐ All piping, hoses, and dispensers will be located inside the containment structure.
☐ Some of the piping to dispensers or equipment will extend outside the containment structure.
☐ The piping will be aboveground
☐ The piping will be underground

31. ☐ The containment area must be constructed of and in a material impervious to the substance(s) being stored. The proposed containment structure will be constructed of: _____.

32. ☐ **Attachment H - AST Containment Structure Drawings**. A scaled drawing of the containment structure is attached that shows the following:

☐ Interior dimensions (length, width, depth and wall and floor thickness).
☐ Internal drainage to a point convenient for the collection of any spillage.
☐ Tanks clearly labeled
☐ Piping clearly labeled
☐ Dispenser clearly labeled

33. ☐ Any spills must be directed to a point convenient for collection and recovery. Spills from storage tank facilities must be removed from the controlled drainage area for disposal within 24 hours of the spill.

☐ In the event of a spill, any spillage will be removed from the containment structure within 24 hours of the spill and disposed of properly.

☐ In the event of a spill, any spillage will be drained from the containment structure through a drain and valve within 24 hours of the spill and disposed of properly. The drain and valve system are shown in detail on the scaled drawing.

Site Plan Requirements

Items 34 - 46 must be included on the Site Plan.

34. ☐ The Site Plan must have a minimum scale of 1" = 400'.

    Site Plan Scale: 1" = 100'.

35. 100-year floodplain boundaries:

    ☐ Some part(s) of the project site is located within the 100-year floodplain. The floodplain is shown and labeled.

    ☒ No part of the project site is located within the 100-year floodplain.

    The 100-year floodplain boundaries are based on the following specific (including date of material) sources(s): FEMA Firm# 48491C-0435E Williamson County, TX, dated Sept 26, 2008.

36. ☒ The layout of the development is shown with existing and finished contours at appropriate, but not greater than ten-foot contour intervals. Lots, recreation centers, buildings, roads, etc. are shown on the site plan.

    ☐ The layout of the development is shown with existing contours at appropriate, but not greater than ten-foot contour intervals. Finished topographic contours will not differ from the existing topographic configuration and are not shown. Lots, recreation centers, buildings, roads, etc. are shown on the site plan.

37. ☒ A drainage plan showing all paths of drainage from the site to surface streams.

38. ☒ The drainage patterns and approximate slopes anticipated after major grading activities.

39. ☒ Areas of soil disturbance and areas which will not be disturbed.

40. ☒ Locations of major structural and nonstructural controls. These are the temporary and permanent best management practices.

41. ☒ Locations where soil stabilization practices are expected to occur.

42. ☒ Surface waters (including wetlands).

    ☐ N/A

43. ☒ Locations where stormwater discharges to surface water.

    ☐ There will be no discharges to surface water.

44. ☒ Temporary aboveground storage tank facilities.

    ☐ Temporary aboveground storage tank facilities will not be located on this site.

45. ☐ Permanent aboveground storage tank facilities.

☒ Permanent aboveground storage tank facilities will not be located on this site.

46. ☒ Legal boundaries of the site are shown.

Permanent Best Management Practices (BMPs)

Practices and measures that will be used during and after construction is completed.

47. ☒ Permanent BMPs and measures must be implemented to control the discharge of pollution from regulated activities after the completion of construction.

☐ N/A

48. ☒ These practices and measures have been designed, and will be constructed, operated, and maintained to insure that 80% of the incremental increase in the annual mass loading of total suspended solids (TSS) from the site caused by the regulated activity is removed. These quantities have been calculated in accordance with technical guidance prepared or accepted by the executive director.

☒ The TCEQ Technical Guidance Manual (TGM) was used to design permanent BMPs and measures for this site.

☐ A technical guidance other than the TCEQ TGM was used to design permanent BMPs and measures for this site. The complete citation for the technical guidance that was used is: _____.

☐ N/A

49. ☒ Owners must insure that permanent BMPs and measures are constructed and function as designed. A Texas Licensed Professional Engineer must certify in writing that the permanent BMPs or measures were constructed as designed. The certification letter must be submitted to the appropriate regional office within 30 days of site completion.

☐ N/A

50. Where a site is used for low density single-family residential development and has 20 % or less impervious cover, other permanent BMPs are not required. This exemption from permanent BMPs must be recorded in the county deed records, with a notice that if the percent impervious cover increases above 20% or land use changes, the exemption for the whole site as described in the property boundaries required by 30 TAC §213.4(g) (relating to Application Processing and Approval), may no longer apply and the property owner must notify the appropriate regional office of these changes.

☐ The site will be used for low density single-family residential development and has 20% or less impervious cover.

☒ The site will be used for low density single-family residential development but has more than 20% impervious cover.

☐ The site will not be used for low density single-family residential development.

51. The executive director may waive the requirement for other permanent BMPs for multi-family residential developments, schools, or small business sites where 20% or less impervious cover is used at the site. This exemption from permanent BMPs must be recorded in the county deed records, with a notice that if the percent impervious cover increases above 20% or land use changes, the exemption for the whole site as described in the property boundaries required by 30 TAC §213.4(g) (relating to Application Processing and Approval), may no longer apply and the property owner must notify the appropriate regional office of these changes.

- ☐ **Attachment I - 20% or Less Impervious Cover Waiver**. The site will be used for multi-family residential developments, schools, or small business sites and has 20% or less impervious cover. A request to waive the requirements for other permanent BMPs and measures is attached.
- ☒ The site will be used for multi-family residential developments, schools, or small business sites but has more than 20% impervious cover.
- ☐ The site will not be used for multi-family residential developments, schools, or small business sites.

52. ☒ **Attachment J - BMPs for Upgradient Stormwater**.

- ☒ A description of the BMPs and measures that will be used to prevent pollution of surface water, groundwater, or stormwater that originates upgradient from the site and flows across the site is attached.
- ☐ No surface water, groundwater or stormwater originates upgradient from the site and flows across the site, and an explanation is attached.
- ☐ Permanent BMPs or measures are not required to prevent pollution of surface water, groundwater, or stormwater that originates upgradient from the site and flows across the site, and an explanation is attached.

53. ☒ **Attachment K - BMPs for On-site Stormwater**.

- ☒ A description of the BMPs and measures that will be used to prevent pollution of surface water or groundwater that originates on-site or flows off the site, including pollution caused by contaminated stormwater runoff from the site is attached.
- ☐ Permanent BMPs or measures are not required to prevent pollution of surface water or groundwater that originates on-site or flows off the site, including pollution caused by contaminated stormwater runoff, and an explanation is attached.

54. ☒ **Attachment L - BMPs for Surface Streams**. A description of the BMPs and measures that prevent pollutants from entering surface streams is attached.

- ☐ N/A

55. ☒ **Attachment M - Construction Plans**. Construction plans and design calculations for the proposed permanent BMPs and measures have been prepared by or under the direct supervision of a Texas Licensed Professional Engineer, and are signed, sealed, and dated. Construction plans for the proposed permanent BMPs and measures are

attached and include: Design calculations, TCEQ Construction Notes, all proposed structural plans and specifications, and appropriate details.

☐ N/A

56. ☒ **Attachment N - Inspection, Maintenance, Repair and Retrofit Plan**. A site and BMP specific plan for the inspection, maintenance, repair, and, if necessary, retrofit of the permanent BMPs and measures is attached. The plan fulfills all of the following:

    ☐ Prepared and certified by the engineer designing the permanent BMPs and measures
    ☒ Signed by the owner or responsible party
    ☐ Outlines specific procedures for documenting inspections, maintenance, repairs, and, if necessary, retrofit.
    ☐ Contains a discussion of record keeping procedures

    ☐ N/A

57. ☐ **Attachment O - Pilot-Scale Field Testing Plan**. Pilot studies for BMPs that are not recognized by the Executive Director require prior approval from the TCEQ. A plan for pilot-scale field testing is attached.

    ☒ N/A

58. ☒ **Attachment P - Measures for Minimizing Surface Stream Contamination**. A description of the measures that will be used to avoid or minimize surface stream contamination and changes in the way in which water enters a stream as a result of the construction and development is attached. The measures address increased stream flashing, the creation of stronger flows and in-stream velocities, and other in-stream effects caused by the regulated activity, which increase erosion that result in water quality degradation.

    ☐ N/A

Responsibility for Maintenance of Permanent BMPs and Measures after Construction is Complete.

59. ☒ The applicant is responsible for maintaining the permanent BMPs after construction until such time as the maintenance obligation is either assumed in writing by another entity having ownership or control of the property (such as without limitation, an owner's association, a new property owner or lessee, a district, or municipality) or the ownership of the property is transferred to the entity. Such entity shall then be responsible for maintenance until another entity assumes such obligations in writing or ownership is transferred.

60. ☒ A copy of the transfer of responsibility must be filed with the executive director at the appropriate regional office within 30 days of the transfer if the site is for use as a multiple single-family residential development, a multi-family residential development,

or a non-residential development such as commercial, industrial, institutional, schools, and other sites where regulated activities occur.

Administrative Information

61. ☒ Submit one (1) original and one (1) copy of the application, plus additional copies as needed for each affected incorporated city, groundwater conservation district, and county in which the project will be located. The TCEQ will distribute the additional copies to these jurisdictions.

62. ☒ Any modification of this Contributing Zone Plan may require TCEQ review and Executive Director approval prior to construction, and may require submission of a revised application, with appropriate fees.

63. ☒ The site description, controls, maintenance, and inspection requirements for the storm water pollution prevention plan (SWPPP) developed under the EPA NPDES general permits for stormwater discharges have been submitted to fulfill paragraphs 30 TAC §213.24(1-5) of the technical report. All requirements of 30 TAC §213.24(1-5) have been met by the SWPPP document.

☒ The Temporary Stormwater Section (TCEQ-0602) is included with the application.

ATTACHMENT "A"

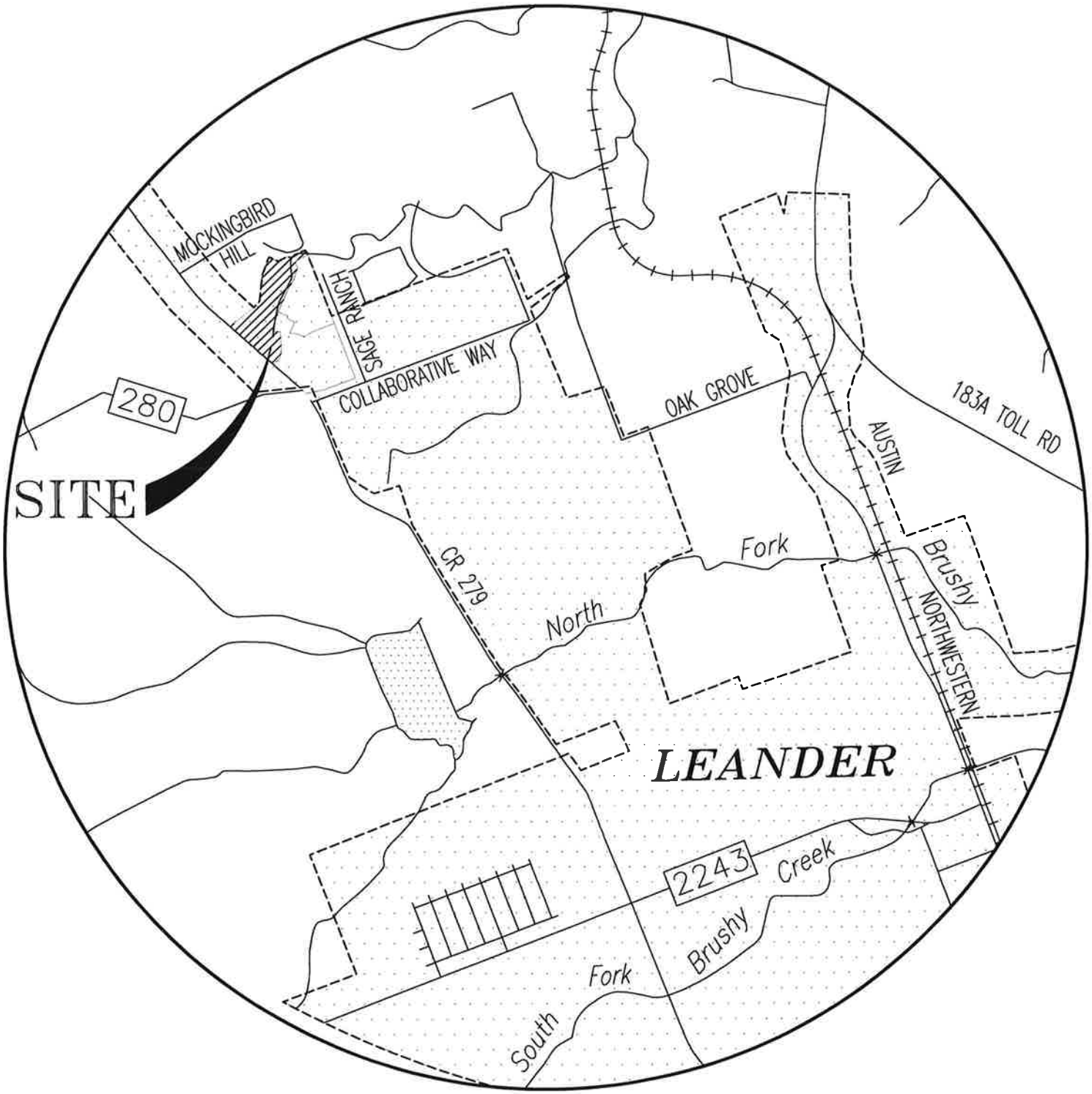

LOCATION MAP

1"=2000'

U.S. DEPARTMENT OF THE INTERIOR
U.S. GEOLOGICAL SURVEY

The National Map
US Topo

NAMELESS QUADRANGLE
TEXAS
7.5-MINUTE SERIES

Produced by the United States Geological Survey
North American Datum of 1983 (NAD83)
World Geodetic System of 1984 (WGS84). Projection and
1 000-meter grid:Universal Transverse Mercator, Zone 14R

This map is not a legal document. Boundaries may be generalized for this map scale. Private lands within government reservations may not be shown. Obtain permission before entering private lands.

Imagery....NAIP, September 2016 - November 2016
Roads.... U.S. Census Bureau, 2015
Names....GNIS, 1979 - 2018
Hydrography....National Hydrography Dataset, 2002 - 2018
Contours....National Elevation Dataset, 2002 - 2004
Boundaries....Multiple sources; see metadata file 2016 - 2017

Wetlands....FWS National Wetlands Inventory 1982

MN
GN
0°32′ 9 MILS
3°48′ 68 MILS
UTM GRID AND 2019 MAGNETIC NORTH DECLINATION AT CENTER OF SHEET

U.S. National Grid
100,000 - m Square ID
NU PU
Grid Zone Designation 14R

SCALE 1:24 000
KILOMETERS
METERS
MILES
FEET

CONTOUR INTERVAL 20 FEET
NORTH AMERICAN VERTICAL DATUM OF 1988

This map was produced to conform with the National Geospatial Program US Topo Product Standard, 2011.
A metadata file associated with this product is draft version 0.6.18

TEXAS
QUADRANGLE LOCATION

1 Bertram
2 Liberty Hill
3 Leander NE
4 Travis Peak
5 Leander
6 Pace Bend
7 Mansfield Dam
8 Jollyville

ADJOINING QUADRANGLES

ROAD CLASSIFICATION
Expressway
Secondary Hwy
Ramp
Local Connector
Local Road
4WD
Interstate Route
US Route
State Route

NAMELESS, TX
2019

NSN. 7642-01-463-9738
NGA REF NO. USGSX24K312851

CONTRIBUTING ZONE APPLICATION
Attachment "C"
PROJECT NARRATIVE

1.0 GENERAL

Homestead Phase 3 Subdivision is a single-family detached development located on the east side of Bagdad Road, just north of CR 280 within the City of Leander, Texas. This project borders Homestead Phase 1 and 2 to the south. This tract has an approved Concept Plan and Preliminary Plan from the City of Leander and this Construction Plan application is intended to comply with the previous approvals. The subject tract is a total of 18.21 acres of land, and the Project includes 21 two-family detached residential lots & 3 miscellaneous lots for park, drainage and open space.

2.0 ACCESS\TRANSPORTATION

The Homestead phase 3 Subdivision will take primary access via Bagdad Drive to the west. Care was taken to provide pedestrian access though the site as well as good circulation for vehicular traffic. All street design and construction will conform with City of Leander requirements.

3.0 IMPERVIOUS COVER

Impervious Cover for this section will come from houses, driveways, sidewalks, and streets. Homestead Phase 3 proposes 4.12 acres of impervious cover. No previous development exists and no area is proposed to be demolished for this site.

4.0 WATER QUALITY/DETENTION

The drainage from this site will run overland to proposed streets and eventually to a storm sewer conveyance system that will convey the runoff to a batch detention Pond at the north-east corner of the site. The water quality Pond is designed to treat runoff for Homestead Phase 3. The pond B will provide water quality treatment (TCEQ requirement for Edwards Aquifer Contributing Zone). All drainage design and construction will comply with City of Leander requirements. Detention was provided with Pond A (built with Phase 1) for the entirety of Homestead Phase 1, 2 and 3.

5.0 WATER AND WASTEWATER

Water and wastewater service for this Project will be provided by the City of Leander. Water connections will be made to the stubbed waterlines from Homestead Phase 2 and to waterline on Bagdad Road.

Wastewater connections will be to wastewater lines to be built with Homestead Phase 2 stubbed to phase 3.

6.0 TREE PRESERVATION

Preservation of existing trees and mitigation for tree removal will comply with the Consent Agreement. There are numerous ash juniper trees on site with scattered live oak trees intermixed.

7.0 RIPARIAN CORRIDOR

Per the Consent Agreement, Homestead will average the riparian corridor setbacks to provide at least as much setback as is strictly required by the City Ordinance. This plan provides more setback than is required and the resulting surplus will be applied to future phases.

8.0 FLOODPLAIN

No portion of this tract is within the designated flood hazard area as shown the federal emergency management agency (FEMA) flood insurance rate map #48491C2075E and 48491C0455E, Williamson County, Texas dated September 26, 2008.

9.0 PARKLAND DEDICATION

This project will comply with the City of Leander parkland dedication requirements and the Consent Agreement.

10.0 CERTIFICATION

I hereby certify that this Plan complies with the Consent Agreement and applicable codes and ordinances, and the information contained here on is true and correct to the best of my knowledge.

Lee A. Whited, P.E. #102471
Project Manager
CARLSON, BRIGANCE, & DOERING, INC. F-3791
5501 West William Cannon Dr., Austin, Texas 78749

8-26-20

STATE OF TEXAS
LEE A. WHITED
102471
LICENSED
PROFESSIONAL ENGINEER
CBD, Inc.
F-3791

CZP APPLICATION

ATTACHMENT "D"

Factors contributing to the contamination of surface and groundwater are generated from man made pollutants such as pet waste, pesticides, fertilizers, illegal trash dumping, and automotive fluids.

CZP APPLICATION

ATTACHMENT "E"

Volume and Character of Stormwater Runoff:

This project will generate approximately 40.4 CFS. The runoff leaving the site will be in compliance with the Texas Commission on Environmental Quality Regulations. Runoff from the development will be routed to the water quality batch detention pond B in this phase via channels, culverts, and storm sewers. The batch detention pond B has a 91% removal rate by TCEQ Standards. The batch detention pond B was designed and will be built to meet TCEQ Standard Specifications. The quality of runoff will be at an acceptable level. The runoff will be coming from proposed two-family homes and proposed streets. The average curve number for proposed development is 86 and the impervious cover in the proposed developed state is 22.6% and is approximately 0% for the undeveloped state. The runoff coefficient for existing conditions is .37 and the runoff coefficient for proposed conditions is .67.

CZP APPLICATION

ATTACHMENT "J"

Most of Homestead Phase 3 and part of offsite flow will drain to batch detention Pond "B" being built with this phase. There is a total of 45.39 acres of offsite are flowing to the site. 44.07 acres of offsite flow will drain through a natural channel then across a proposed culvert on Thistle Hill Drive then into a natural pond/creek. 1.31 Acres of offsite flow will flow through the streets, storm system and into the proposed Pond B. The batch detention pond was designed in accordance with TCEQ to handle onsite proposed flows and flows from offsite areas.

CZP APPLICATION

ATTACHMENT "K"

The proposed site is approximately 18.21 acres. All storm water will run overland where it will be diverted by channels and streets and storm system into the water quality pond B then released. Detention for this phase will be provided by Pond A built with Phase 1. The water quality controls were designed using TCEQ Technical Guidance Manual RG-348.

CZP APPLICATION

ATTACHMENT "L"

Pond "B" (Water Quality Pond being built with Homestead Phase 3) has been designed to capture Homestead Phase 3 development. A small portion of Phase 3 impervious cover runs off uncontrolled. Water Quality Pond "B" is a batch detention pond and is capable of removing 91% of pollutant loads. Pond "B" will remove enough loads to compensate for those untreated areas proposed & existing developed areas. Loads will be removed at 80% or more by Water Quality Pond "B". There are no features located within the project site or affected by the project construction.

ATTACHMENT N– Inspection, Maintenance, Repair and Retrofit Plan

PROJECT DESCRIPTION

Homestead Phase 3 is a 18.21 acre parcel out of the approved Homestead approved Preliminary Plan. Homestead Phase 3 plat includes 21 single-family lots and various lots for parkland, landscaping, sidewalks, and easements. Homestead is located in Western Williamson County, Texas in the City of Leander's City Limits. This property is located along the Southfork of the San Gabriel River. The project site is in the Edward's Aquifer Contributing Zone.

Homestead Phase 3 will incorporate a batch detention basin pond for permanent water quality control.

PEST MANAGEMENT

The following Integrated Pest Management plan for Homestead Phase 3 will assume that primary pests of concern will be Aphids, Beetles, Beneficial Insects, Caterpillars, Fertilizing Recommendations, Fire Ants, Fleas, Galls, Hiring a Landscape Professional, Landscaping, Lawn Care, Lawn Problems, Mosquito's, Poison Ivy, Pruning, Spider Mites, Product Ratings, Scale, Snails, Stink Bugs, and Weeks. The anticipated pest problems have been derived from the type of pests that typically inhabit subdivisions and developments within local proximity to the project.

Non-toxic and less persistent control products should be employed in controlling pests before more persistent products are considered. More persistent control products should only be used after all other tactics have been employed. It is advisable to utilize a pest control professional, familiar with the IPM approaches, before resorting to highly toxic and persistent chemicals. Regularly scheduled pesticide applications are not considered to be part of the Integrated Pest management.

BATCH DETENTION BASIN

A clear requirement for batch detention basins is that a firm commitment be made to carry out both routine and non-routine maintenance tasks. The nature of the maintenance requirements are outlined below:

Inspections. Inspections should take place a minimum of twice a year. One inspection should take place during wet weather to determine if the basin is meeting the target detention time of 12 hours and a drawdown time of no more than 48 hours. The remaining inspections should occur between storm events so that manual operation of the valve and controller can be verified. The level sensor in the basin should be inspected and any debris or sediment in the area should be removed. The outlet structure and the trash screen should be inspected for signs of clogging. Debris and sediment should be removed from the outlet. Debris obstructing the valve should be removed. During each inspection, erosion areas inside and downstream of this BMP should be identified and repaired/revegetated immediately.

Mowing. The basin, basin side-slopes, and embankment of the basin must be mowed to prevent woody growth and control weeds. A mulching mower should be used, or the grass clippings should be caught and removed. Mowing should take place at least twice a year, or more frequently if vegetation exceeds 18 inches in height.

Litter and Debris Removal. Litter and debris removal should take place at least twice a year, as part of the periodic mowing operations and inspections. Debris and litter should be removed from the surface of the basin. Particular attention should be paid to floatable debris around the outlet structure. The outlet should be checked for possible clogging or obstructions and any debris removed.

Erosion control. The basin side slopes and embankment all may periodically suffer from slumping and erosion. To correct these problems, corrective action, such as regrading and revegetation, may be necessary. Correction of erosion control should take place whenever required based on the periodic inspections.

Nuisance Control. Standing water or soggy conditions may occur in the basin. Some standing water may occur after a storm event since the valve may close with 2 to 3 inches of water in the basin. Some flow into the basin may also occur between storms due to spring flow and residential water use that enters the storm sewer system. Twice a year, the facility should be evaluated in terms of nuisance control (insects, weeds, odors, algae, etc.).

Structural Repairs and Replacement. With each inspection, any damage to structural elements of the basin (pipes, concrete drainage structures, retaining walls, etc.) should be identified and repaired immediately. An example of this type of repair can include patching of cracked concrete, sealing of voids, removal of vegetation from cracks and joints. The various inlet/outlet structures in a basin will eventually deteriorate and must be replaced.

Sediment Removal. A properly designed batch detention basin will accumulate quantities of sediment over time. The accumulated sediment can detract from the appearance of the facility and reduce the pollutant removal performance of the facility. The sediment also tends to accumulate near the outlet structure and can interfere with the level sensor operation. Sediment shall be removed from the basin at least every 5 years, when sediment depth exceeds 6 inches, when the sediment interferes with the level sensor or when the basin does not drain within 48 hours.

Logic Controller. The Logic Controller should be inspected as part of the twice yearly inspections. Verify that the external indicators (active, cycle in progress) are operating properly by turning the controller off and on, and by initiating a cycle by triggering the level sensor in the basin. The valve should be manually opened and closed using the open/close switch to verify valve operation and to assist in inspecting the valve for debris. The solar panel should be inspected and any dust or debris on the panel should be carefully removed. The controller and all other circuitry and wiring should be inspected for signs of corrosion, damage from insects, water leaks, or other damage. At the end of the inspection, the controller should be reset.

Record Keeping. The responsible party shall maintain written copies of inspection reports indicating, at a minimum: date of inspection, weather during inspection, items noted during inspection, documentation of repairs made, and other inspection items discussed above. The responsible party shall maintain all records for a minimum of two (2) years following the date of inspections.

BMP DESIGN FIRM INFORMATION

Carlson, Brigance and Doering, Inc.
Mr. Lee A. Whited, P.E.
Phone: (512) 280-5160
5501 West William Cannon
Austin, TX 78749

The above Inspection, Maintenance, Repair and Retrofit Plan has been prepared by the undersigned Engineer, and I hereby certify that the above Plan conforms with the minimum requirements of the TCEQ Technical Guidance on Best Management Practices, RG-348.

8-26-20

Lee A. Whited, P.E. Date Seal

8-26-20

STATE OF TEXAS
LEE A. WHITED
102471
LICENSED
PROFESSIONAL ENGINEER
CBD, Inc.
F-3791

OWNER CONTACT INFORMATION

Gehan Homes
Mr. Rich Christiano
Phone: (512) 330-9366
3815 S Capital Texas Hwy
Austin, Texas 78704

The Owner certifies that the requirements within the Inspection, Maintenance, Repair and Retrofit Plan above will be adhered to in conformance with the approved Contributing Zone Plan until such time as the maintenance obligations are assumed by another entity and appropriate transfer of responsibility documents filed with TCEQ.

8/3/20

Owner Signature Date

Richard Christiano V.P of Operations

Printed Name Title

CZP APPLICATION

ATTACHMENT "P"

The project utilizes a water quality batch detention (Pond "B") that is being built with HOMESTEAD PHASE 3 to minimize surface stream contamination. The batch detention pond will reduce the sediment pollutant load to be less than or equal to that of existing loads. Discharge flows over the pond outlet structures are reinforced with outfall protection. This evenly distributes the discharge flow and slows discharge velocities, thus stopping the undermining of soil and sediment transport to the creek.

II. WATER QUALITY DESIGN

WATER QUALITY METHODOLOGY

Water Quality will be provided by a batch detention pond being built with Homestead Phase 3 (Pond B) and will treat proposed Homestead Phase 3. Total suspended solid load removal was determined using TCEQ's Load Removal Calculations. Provided are TSS sheets for phase 3 Pond B.

Currently, there are no loads entering this site. The loads leaving the site after development will be reduced by 80% or more per TCEQ regulations.

Impervious Cover was determined based on TCEQ's requirements for residential development as well as any roadway and park areas. These values were plugged into the TCEQ Load Spreadsheet provided.

WATER QUALITY
PROPOSED IMPERVIOUS COVER & CALCULATIONS MAP

LEGEND

PHASE 3

- STRUCTURE (3500 SQ. FT.) LOT: 12 LOTS
- STRUCTURE (4000 SQ. FT.) LOT: 8 LOTS
- STRUCTURE (5000 SQ. FT.) LOT: 0 LOTS
- PROPERTY BOUNDARY
- PROPOSED DRAINAGE AREA
- OFFSITE DRAINING TO POND

0 50 100 200
SCALE: 1" = 100'

HOMESTEAD PHASE 3
SITE AREA = 18.21 ACRES

QUANTITIES IMPERVIOUS ONSITE PHASE THREE

CL STREETS = 1,832 LF X 36' = 65,952 SF = 1.514 ACRES

CL SIDEWALKS = 3,394 LF X 5' = 16,970 SF = 0.390 ACRE

= 1,959 LF X 6' = 11,754 SF = 0.270 ACRES

= 902 LF X 8' = 7,216 SF = 0.166 ACRES

LOTS COUNT 13 x 3,500 SF PER LOT = 45,500 SF = 1.045 ACRES
8 x 4,000 SF PER LOT = 32,000 SF = 0.735 ACRE
0 x 5,000 SF PER LOT = 0 SF = 0 ACRE

TOTAL IMPERVIOUS = 4.120 ACRES

QUANTITIES IMPERVIOUS ONSITE DRAINAGE UNCONTROLLED
LOTS = 1.2x3500+1x4000 = 8,200 SF = 0.188 ACRES

CL SIDEWALKS = 198 LF X 5' = 990 SF = 0.023 ACRES

= 1,959 LF X 6' = 11,754 SF = 0.270 ACRES

= 721 LF X 8' = 5,768 SF = 0.132 ACRES

TOTAL UNCONTROLLED IMPERVIOUS COVER = 0..613 ACRES

DRAINAGE TO POND B (TOTAL DRAINAGE AREA=8.74 ACRES)

CL STREETS = 1,832 LF X 36' = 65,952 SF = 1.514 ACRES

CL SIDEWALKS = 3,196 LF X 5' = 15,980 SF = 0.367 ACRES

= 13 LF X 6' = 78 SF = 0.002 ACRES

= 184 LF X 8' = 1,472 SF = 0.034 ACRES

LOTS COUNT 11.8 x 3,500 SF PER LOT = 41,300 SF = 0.948 ACRES
7 x 4,000 SF PER LOT = 28,000 SF = 0.643 ACRE
0 x 5,000 SF PER LOT = 0 SF = 0 ACRE

TOTAL IMPERVIOUS = 3.508 ACRES

OFFSITE DRAINING TO POND B = 57,036 SQ FT = 1.309 ACRES

FOR CITY OF LEANDER USE

20-PICP-011

DESIGNED BY:	DRAFTED BY:
LAW	ZHL & CMC

REVISION	DATE
INITIAL SUBMITTAL	03.24.20
UPDATE #1 SUBMITTAL	05.18.20
UPDATE #2 SUBMITTAL	07.28.20

Carlson, Brigance & Doering, Inc.
Civil Engineering ◆ Surveying
FIRM ID #F3791
Main Office
5501 West William Cannon Dr.
Austin, Texas 78749
Phone No. (512) 280-5160
North Office
12129 RR 620 N., Ste. 600
Austin, Texas 78750
Fax No. (512) 280-5165

SHEET NAME: IMPERVIOUS COVER PROPOSED MAP

JOB NAME: HOMESTEAD PHASE 3

PROJECT: STREET, DRAINAGE, WATER, AND WASTEWATER IMPROVEMENTS

8/26/2020

STATE OF TEXAS
LEE A. WHITED
102471
LICENSED
PROFESSIONAL ENGINEER
CARLSON, BRIGANCE & DOERING, INC.
ID# F3791

DATE NOVEMBER 2019

JOB NUMBER 5172

SHEET 1 OF 1

SHEET NO. 1

FILE PATH:J:\AC3D\5172\Eng\Docs\CZP-HOMESTEAD PHASE 3\5172-IMPERVIOUS COVER.dwg - Aug 26, 2020 - 2:34pm

WATER QUALITY POND "B"

WQ LOAD REMOVAL CALCULATIONS SUMMARY

Below is a summary of the load for Homestead Phase 3 and a breakdown of Pond B treatment. After this summary are the TCEQ load calculation sheets as support for this Summary.

HOMESTEAD PHASE 3 Load Removal Required
Area= 18.21 acres (Area to onsite Pond= 7.425 acres)
Total Developed impervious Cover= 4.12 ac.
Total Load Removal Requirement = 3,586 lbs.

Loads required to be removed phase 3 = 3,586 lbs
Loads removed phase 3 = 3,586 lbs

Pond B Volume Requirements Phase 3 and Offsite
Area to Pond B= 8.735 ac. (Phase 3 Area to Pond 7.425 ac., Offsite to Pond 1.31 ac.)
Impervious Cover to Pond = 3.51 ac
WQ Volume Capacity Needed to remove load = 43,286 FT^3
WQ Volume Capacity Provided = 43,892 FT^3

8-26-20

STATE OF TEXAS
LEE A. WHITED
102471
LICENSED
PROFESSIONAL ENGINEER

CBD, Inc.
F-3791

Texas Commission on Environmental Quality

TSS Removal Calculations 04-20-2009

Project Name: **HOMESTEAD PH 3 POND B**
Date Prepared: **08.11.2020**

Additional information is provided for cells with a red triangle in the upper right corner. Place the cursor over the cell.
Text shown in blue indicate location of instructions in the Technical Guidance Manual - RG-348.
Characters shown in red are data entry fields.
Characters shown in black (Bold) are calculated fields. Changes to these fields will remove the equations used in the spreadshee

1. The Required Load Reduction for the total project: Calculations from RG-348 Pages 3-27 to 3-30

Page 3-29 Equation 3.3: $L_M = 27.2(A_N \times P)$

where:

$L_{M\ TOTAL\ PROJECT}$ = Required TSS removal resulting from the proposed development = 80% of increased I
A_N = Net increase in impervious area for the project
P = Average annual precipitation, inches

Site Data: Determine Required Load Removal Based on the Entire Project

County =	**Williamson**	
Total project area included in plan * =	**18.21**	acres
Predevelopment impervious area within the limits of the plan * =	**0.00**	acres
Total post-development impervious area within the limits of the plan* =	**4.12**	acres
Total post-development impervious cover fraction * =	**0.23**	
P =	**32**	inches
$L_{M\ TOTAL\ PROJECT}$ =	**3586**	lbs.

*** The values entered in these fields should be for the total project area.**

Number of drainage basins / outfalls areas leaving the plan area = **1**

2. Drainage Basin Parameters (This information should be provided for each basin):

Drainage Basin/Outfall Area No. = **1**

8-26-20

STATE OF TEXAS
LEE A. WHITED
102471
LICENSED
PROFESSIONAL ENGINEER
CBD, Inc.
F-3791

Total drainage basin/outfall area =	**8.74**	acres
Predevelopment impervious area within drainage basin/outfall area =	**0.00**	acres
Post-development impervious area within drainage basin/outfall area =	**3.51**	acres
Post-development impervious fraction within drainage basin/outfall area =	**0.40**	
$L_{M\ THIS\ BASIN}$ =	**3053**	lbs.

3. Indicate the proposed BMP Code for this basin.

Proposed BMP = **Batch Detention**

Removal efficiency = **91** percent

Aqualogic Cartridge Filter
Batch Detention
Bioretention
Contech StormFilter
Constructed Wetland
Extended Detention
Grassy Swale
Retention / Irrigation
Sand Filter
Stormceptor
Vegetated Filter Strips
Vortechs
Wet Basin
Wet Vault

4. Calculate Maximum TSS Load Removed (L_R) for this Drainage Basin by the selected BMP Type.

RG-348 Page 3-33 Equation 3.7: L_R = (BMP efficiency) x P x (A_I x 34.6 + A_P x 0.54)

where:

A_C = Total On-Site drainage area in the BMP catchment area
A_I = Impervious area proposed in the BMP catchment area
A_P = Pervious area remaining in the BMP catchment area
L_R = TSS Load removed from this catchment area by the proposed BMP

A_C =	**8.74**	acres
A_I =	**3.51**	acres
A_P =	**5.23**	acres
L_R =	**3619**	lbs

5. Calculate Fraction of Annual Runoff to Treat the drainage basin / outfall area

Desired $L_{M\ THIS\ BASIN}$ =	3586	lbs.
F =	0.99	

6. Calculate Capture Volume required by the BMP Type for this drainage basin / outfall area. Calculations from RG-348 Pages 3-34 to 3-36

Rainfall Depth =	3.66	inches
Post Development Runoff Coefficient =	0.31	
On-site Water Quality Volume =	35723	cubic feet

Calculations from RG-348 Pages 3-36 to 3-37

Off-site area draining to BMP =	1.31	acres
Off-site Impervious cover draining to BMP =	0.00	acres
Impervious fraction of off-site area =	0.00	
Off-site Runoff Coefficient =	0.02	
Off-site Water Quality Volume =	348	cubic feet
Storage for Sediment =	7214	
Total Capture Volume (required water quality volume(s) x 1.20) =	43286	cubic feet

III. Temporary Stormwater (TCEQ-0602)

ATTACHMENT A – Spill Response Actions
ATTACHMENT B – Potential Sources of Contamination
ATTACHMENT C – Sequence of Major Activities
ATTACHMENT D – Temporary Best Management Practices and Measures
~~ATTACHMENT E – Request to Temporarily Seal a Fracture, if sealing a feature~~
ATTACHMENT F – Structural Practices
ATTACHMENT G – Drainage Area Map (See Construction Plans)
~~ATTACHMENT H – Temporary Sediment Pond(s) Plans and Calculations~~
ATTACHMENT I – Inspection and Maintenance for BMPs
ATTACHMENT J – Schedule of Interim and Permanent Soil Stabilization Practices

Temporary Stormwater Section

Texas Commission on Environmental Quality

for Regulated Activities on the Edwards Aquifer Recharge Zone and Relating to 30 TAC §213.5(b)(4)(A), (B), (D)(I) and (G); Effective June 1, 1999

To ensure that the application is administratively complete, confirm that all fields in the form are complete, verify that all requested information is provided, consistently reference the same site and contact person in all forms in the application, and ensure forms are signed by the appropriate party.

Note: Including all the information requested in the form and attachments contributes to more streamlined technical reviews.

Signature

To the best of my knowledge, the responses to this form accurately reflect all information requested concerning the proposed regulated activities and methods to protect the Edwards Aquifer. This **Temporary Stormwater Section** is hereby submitted for TCEQ review and executive director approval. The application was prepared by:

Print Name of Customer/Agent: Lee A. Whited

Date: 08-11-2020

Signature of Customer/Agent:

Regulated Entity Name: Homestead Phase 3

Project Information

Potential Sources of Contamination

Examples: Fuel storage and use, chemical storage and use, use of asphaltic products, construction vehicles tracking onto public roads, and existing solid waste.

1. Fuels for construction equipment and hazardous substances which will be used during construction:

   ☒ The following fuels and/or hazardous substances will be stored on the site: gas

   These fuels and/or hazardous substances will be stored in:

   ☒ Aboveground storage tanks with a cumulative storage capacity of less than 250 gallons will be stored on the site for less than one (1) year.

- ☐ Aboveground storage tanks with a cumulative storage capacity between 250 gallons and 499 gallons will be stored on the site for less than one (1) year.
- ☐ Aboveground storage tanks with a cumulative storage capacity of 500 gallons or more will be stored on the site. An Aboveground Storage Tank Facility Plan application must be submitted to the appropriate regional office of the TCEQ prior to moving the tanks onto the project.

☐ Fuels and hazardous substances will not be stored on the site.

2. ☒ **Attachment A - Spill Response Actions**. A site specific description of the measures to be taken to contain any spill of hydrocarbons or hazardous substances is attached.

3. ☐ Temporary aboveground storage tank systems of 250 gallons or more cumulative storage capacity must be located a minimum horizontal distance of 150 feet from any domestic, industrial, irrigation, or public water supply well, or other sensitive feature.

4. ☒ **Attachment B - Potential Sources of Contamination**. A description of any activities or processes which may be a potential source of contamination affecting surface water quality is attached.

Sequence of Construction

5. ☒ **Attachment C - Sequence of Major Activities**. A description of the sequence of major activities which will disturb soils for major portions of the site (grubbing, excavation, grading, utilities, and infrastructure installation) is attached.

   - ☒ For each activity described, an estimate (in acres) of the total area of the site to be disturbed by each activity is given.
   - ☒ For each activity described, include a description of appropriate temporary control measures and the general timing (or sequence) during the construction process that the measures will be implemented.

6. ☒ Name the receiving water(s) at or near the site which will be disturbed or which will receive discharges from disturbed areas of the project: Tributary North Fork Brushy Creek

Temporary Best Management Practices (TBMPs)

Erosion control examples: tree protection, interceptor swales, level spreaders, outlet stabilization, blankets or matting, mulch, and sod. Sediment control examples: stabilized construction exit, silt fence, filter dikes, rock berms, buffer strips, sediment traps, and sediment basins. Please refer to the Technical Guidance Manual for guidelines and specifications. All structural BMPs must be shown on the site plan.

7. ☒ **Attachment D – Temporary Best Management Practices and Measures**. TBMPs and measures will prevent pollution of surface water, groundwater, and stormwater. The construction-phase BMPs for erosion and sediment controls have been designed to retain sediment on site to the extent practicable. The following information is attached:

- ☒ A description of how BMPs and measures will prevent pollution of surface water, groundwater or stormwater that originates upgradient from the site and flows across the site.
- ☒ A description of how BMPs and measures will prevent pollution of surface water or groundwater that originates on-site or flows off site, including pollution caused by contaminated stormwater runoff from the site.
- ☒ A description of how BMPs and measures will prevent pollutants from entering surface streams, sensitive features, or the aquifer.
- ☒ A description of how, to the maximum extent practicable, BMPs and measures will maintain flow to naturally-occurring sensitive features identified in either the geologic assessment, TCEQ inspections, or during excavation, blasting, or construction.

8. ☐ The temporary sealing of a naturally-occurring sensitive feature which accepts recharge to the Edwards Aquifer as a temporary pollution abatement measure during active construction should be avoided.

   - ☐ **Attachment E - Request to Temporarily Seal a Feature**. A request to temporarily seal a feature is attached. The request includes justification as to why no reasonable and practicable alternative exists for each feature.
   - ☐ There will be no temporary sealing of naturally-occurring sensitive features on the site.

9. ☒ **Attachment F - Structural Practices**. A description of the structural practices that will be used to divert flows away from exposed soils, to store flows, or to otherwise limit runoff discharge of pollutants from exposed areas of the site is attached. Placement of structural practices in floodplains has been avoided.

10. ☒ **Attachment G - Drainage Area Map**. A drainage area map supporting the following requirements is attached:

    - ☐ For areas that will have more than 10 acres within a common drainage area disturbed at one time, a sediment basin will be provided.
    - ☐ For areas that will have more than 10 acres within a common drainage area disturbed at one time, a smaller sediment basin and/or sediment trap(s) will be used.
    - ☐ For areas that will have more than 10 acres within a common drainage area disturbed at one time, a sediment basin or other equivalent controls are not attainable, but other TBMPs and measures will be used in combination to protect down slope and side slope boundaries of the construction area.
    - ☐ There are no areas greater than 10 acres within a common drainage area that will be disturbed at one time. A smaller sediment basin and/or sediment trap(s) will be used in combination with other erosion and sediment controls within each disturbed drainage area.

☒ There are no areas greater than 10 acres within a common drainage area that will be disturbed at one time. Erosion and sediment controls other than sediment basins or sediment traps within each disturbed drainage area will be used.

11. ☐ **Attachment H - Temporary Sediment Pond(s) Plans and Calculations**. Temporary sediment pond or basin construction plans and design calculations for a proposed temporary BMP or measure have been prepared by or under the direct supervision of a Texas Licensed Professional Engineer. All construction plans and design information must be signed, sealed, and dated by the Texas Licensed Professional Engineer. Construction plans for the proposed temporary BMPs and measures are attached.

☐ N/A

12. ☒ **Attachment I - Inspection and Maintenance for BMPs.** A plan for the inspection of each temporary BMP(s) and measure(s) and for their timely maintenance, repairs, and, if necessary, retrofit is attached. A description of the documentation procedures, recordkeeping practices, and inspection frequency are included in the plan and are specific to the site and/or BMP.

13. ☒ All control measures must be properly selected, installed, and maintained in accordance with the manufacturer's specifications and good engineering practices. If periodic inspections by the applicant or the executive director, or other information indicate a control has been used inappropriately, or incorrectly, the applicant must replace or modify the control for site situations.

14. ☒ If sediment escapes the construction site, off-site accumulations of sediment must be removed at a frequency sufficient to minimize offsite impacts to water quality (e.g., fugitive sediment in street being washed into surface streams or sensitive features by the next rain).

15. ☐ Sediment must be removed from sediment traps or sedimentation ponds not later than when design capacity has been reduced by 50%. A permanent stake will be provided that can indicate when the sediment occupies 50% of the basin volume.

16. ☒ Litter, construction debris, and construction chemicals exposed to stormwater shall be prevented from becoming a pollutant source for stormwater discharges (e.g., screening outfalls, picked up daily).

Soil Stabilization Practices

Examples: establishment of temporary vegetation, establishment of permanent vegetation, mulching, geotextiles, sod stabilization, vegetative buffer strips, protection of trees, or preservation of mature vegetation.

17. ☒ **Attachment J - Schedule of Interim and Permanent Soil Stabilization Practices**. A schedule of the interim and permanent soil stabilization practices for the site is attached.

18. ☒ Records must be kept at the site of the dates when major grading activities occur, the dates when construction activities temporarily or permanently cease on a portion of the site, and the dates when stabilization measures are initiated.

19. ☒ Stabilization practices must be initiated as soon as practicable where construction activities have temporarily or permanently ceased.

Administrative Information

20. ☒ All structural controls will be inspected and maintained according to the submitted and approved operation and maintenance plan for the project.

21. ☒ If any geologic or manmade features, such as caves, faults, sinkholes, etc., are discovered, all regulated activities near the feature will be immediately suspended. The appropriate TCEQ Regional Office shall be immediately notified. Regulated activities must cease and not continue until the TCEQ has reviewed and approved the methods proposed to protect the aquifer from any adverse impacts.

22. ☒ Silt fences, diversion berms, and other temporary erosion and sediment controls will be constructed and maintained as appropriate to prevent pollutants from entering sensitive features discovered during construction.

TEMPORARY STORMWATER SECTION

ATTACHMENT "A"

Below is the general procedure to follow in the event of a spill or loss of product resulting in an impact or potential impact to soil, surface water, groundwater or sanitary sewer system.

Notifications:

- 911 (if immediate danger to life or health)
- General Contractor Site Superintendent.
- Environmental Emergency Response Contractor (if necessary).
- For spills that exceed the reportable quantity established per federal and state regulations, also contact the Texas Commission on Environmental Quality (TCEQ) at 800-832-8224 and the National Response Center at 800-424-8802. **Reportable quantities are provided behind this Attachment.**

Cleanup:

- Impacted soil or used absorbent material shall be picked up and stored in a waterproof, leak proof manner such as on plastic sheeting and covered with plastic sheeting, a drum or roll-off container with a lid or cover that can be secured, or a 5-gallon bucket with a secure lid.
- The Site Superintendent or Emergency Response Coordinator will work with TCEQ to determine the appropriate sampling and disposal protocols for handling impacted soils, absorbent materials, or water.
- Provide proof of sampling and disposal such as laboratory analytical reports and waste manifests to TCEQ.

Follow-up:

- Within 48 hours send a written report to TCEQ describing the cause of the release, the total quantity of material discharged, description of corrective action taken or still in progress to be completed, notifications made, and plans for preventing recurrence.
- Complete any follow-up reports required by the TCEQ or National Response Center within the allowable time frames.
- Submit a copy of documentation of disposal to TCEQ and US EPA at the time of disposal. Also submit a copy of the final uniform hazardous waste manifest "designated facility to generator copy" by the time of environmental closeout.

REPORTABLE QUANTITY TABLE

Kind of spill	Where discharged	Reportable quantity	Rule, statute, or responsible agency
Hazardous substance	onto land	"Final RQ" in Table 302.4 in 40 CFR 302.4 (see attached)	30 TAC 327
	into water	"Final RQ" or 100 lbs, whichever is **less**	30 TAC 327
Any Oil	coastal waters	as required by the Texas General Land Office	Texas General Land Office
Crude Oil, Oil that is neither a petroleum product nor used oil	onto land	210 gallons (five barrels)	30 TAC 327
	Directly into water	enough to create a sheen	30 TAC 327
Petroleum Product, used oil	onto land from an exempt PST facility	210 gallons (five barrels)	30 TAC 327
	onto land, or onto land from a non-exempt PST facility	25 gallons	30 TAC 327
	directly into water	enough to create a sheen	30 TAC 327
Industrial solid waste or other substances	into water	100 lbs	30 TAC 327
From petroleum storage tanks, underground or aboveground	into water	enough to create a sheen on water	30 TAC 334.75-81
From petroleum storage tanks, underground or aboveground	onto land	25 gallons or equal to the RQ under 40 CFR 302	30 TAC 327
Other substances that may be useful or valuable and are not ordinarily considered to be waste, but will cause pollution if discharged into water in the state	into water	100 lbs	30 TAC 327

TEMPORARY STORMWATER SECTION

ATTACHMENT "B"

Potential sources of contamination include the leaking of fluids from construction equipment, trash generated by workers and material, sediment transport onto public roadways, from construction equipment, and the use of asphaltic products on the roadways.

TEMPORARY STORMWATER SECTION

ATTACHMENT "C"

The major activities of this project that will result in large areas of soil disturbance are:
Sequence of Construction Disturbance

1. General contractor to install and maintain erosion controls and tree protection per approved plans. **(Disturbance 0 AC.)**

2. Hold Pre-Construction conference. **(Disturbance 0 AC.)**

3. Rough cut all required or necessary ponds. Either the permanent outlet structure or a temporary outlet must be constructed prior to development of any embankment or excavation that leads to ponding conditions. The outlet system must consist of low-level outlet and an emergency overflow meeting the requirements of the city of Leander. The outlet system shall be protected from erosion and shall be maintained throughout the course of construction until final restoration is achieved. **(Disturbance 0.63 AC.)**

4. Rough grade streets. No Development of embankment will be permitted at this time. Once streets are rough cut, the geotechnical engineer is to field verify pavement design is appropriate, and modify recommendations accordingly. **(Disturbance 2.32 AC.)**

5. Install all utilities to be located under the proposed pavement. **(Disturbance 0.61 AC.)**

6. Deliver storm sewer cut sheets to the construction inspection division of DPW. **(Disturbance 0 AC.)**

7. Begin installation of storm sewer lines. Upon Completion, restore as much disturbed area as much as possible. Particularly channels and large open areas. **(Disturbance 0.66 AC.)**

8. Deliver final grade cut sheets to the construction's inspection division of DPW. **(Disturbance 0 AC.)**

9. Regrade streets to subgrade. **(Disturbance 1.68 AC.)**

10. Ensure that all underground utility crossings are completed. Lay first course base material on all streets. **(Disturbance 1.80 AC.)**

11. Install curb and gutter. **(Disturbance 0.39 AC.)**

12. Lay final base course on all streets. **(Disturbance 1.68 AC.)**

13. Lay asphalt. **(Disturbance 1.38 AC.)**

14. Complete all underground installations within the R.O.W. **(Disturbance 0.65 AC.)**

15. Complete permanent erosion controls and restoration of site vegetation. **(Disturbance 10.90 AC.)**

16. Final inspection of the project. **(Disturbance 0 AC.)**

17. Remove and dispose of temporary erosion controls. **(Disturbance 0.37 AC.)**

TEMPORARY STORMWATER SECTION

ATTACHMENT "D"

All temporary BMP's will be installed prior to the beginning of construction and remain in place until revegetation has been completed. These temporary measures will include silt fences, inlet dykes, and stabilized construction entrances. These erosion control devices will prevent the transport of sediment generated from this site. Most offsite flows have been diverted around the project via the existing topography and storm leading to the pond; and, therefore will not be polluting or contaminating this runoff. The erosion control devices proposed with this project allow for the passing of water while retaining any sediment or trash. This will allow for the flow to maintain its natural course to naturally occurring sensitive features.

Sequence of Construction Disturbance

1. General contractor to install and maintain erosion controls and tree protection per approved plans. Ensure that concrete wash out area is installed in accordance with the approved plans. **(Duration-1 week**)

2. Hold Pre-Construction conference. **(Duration-2 hour)**

3. Rough grade streets. No Development of embankment will be permitted at this time. Once streets are rough cut, the geotechnical engineer is to field verify pavement design is appropriate, and modify recommendations accordingly. **(Duration- 3 weeks)**

4. Install all utilities to be located under the proposed pavement. **(Duration- 4 weeks)**

5. Deliver storm sewer cut sheets to the construction inspection division of DPW. **(Duration- 1 day)**

6. Begin installation of storm sewer lines. Upon Completion, restore as much disturbed area as much
as possible. Particularly channels and large open areas. **(Duration- 6 weeks)**

7. Deliver final grade cut sheets to the constructions inspection division of DPW.**(Duration- 1 day)**

8. Regrade streets to subgrade. **(Duration-2 week)**

9. Insure that all underground utility crossings are completed. Lay first course base material on all streets. **(Duration-2 week)**

10. Install curb and gutter. **(Duration-1 week)**

TEMPORARY STORMWATER SECTION

ATTACHMENT "D" (CONT.)

11. Lay final base course on all streets. **(Duration-2 week)**

12. Lay asphalt. **(Duration-1 week)**

13. Complete all underground installations within the R.O.W. **(Duration-2 week)**

14. Complete permanent erosion control (including pond) and restoration of site vegetation. **(Duration-2 week)**

15. Final inspection of the project. **(Duration-3 day)**

16. Remove and dispose of temporary erosion controls. **(Duration-1 week)**

TEMPORARY STORMWATER SECTION

ATTACHMENT "F"

Practices of diverting runoff around exposed soils will consist of silt fence, which will be utilized to catch any pollutants from leaving the site. The only runoff aimed at exposed soils will be from the site itself. Below is a list of controls for the site with description.

Stabilized construction entrance: A stabilized construction entrance will be placed at the project boundary at CR 279 (Bagdad Road), per City of Leander Detail 302-1, provided in the erosion control details sheet. The stabilized construction entrance will help prevent sediment from being transported from the site.

Silt Fence: silt fence shall be installed per City of Austin detail 642S-1, as provided in the erosion control detail sheet. Silt fence shall be installed along the outer perimeter of the downstream portion of the site and within the blocks of the lots as shown on the plans. The silt fence will prevent sediment from leaving the site due to disturbed soils during construction. Internal silt fence will reduce sediment draining to the streets under rough cut conditions and final paving.

Inlet Protection: Inlet protection will be installed using a GeoCurve Inlet filter as provided in the detail on the Erosion Control Detail sheet. The inlet filter will prevent any runoff in the street from draining to the water quality pond (Pond B to be built with Phase 3) and causing sediment build up.

Concrete Washout: a concrete washout area will be provided per the City of Leander Detail 303-1 provided in the Erosion Control Detail sheet. The concrete washout area will be provided in the contractor staging area and temporary spoils site. The concrete washout area will prevent concrete slurry from draining into the storm system and washing into the water quality pond.

TEMPORARY STORMWATER SECTION

ATTACHMENT "I"

The temporary BMP's will be inspected on a weekly basis for their compliance with TCEQ and City of Leander Criteria. The contractor will be responsible for maintenance of these items. If cited by the City of Leander, the contractor will have 24 hours to bring the delinquent items up to standard. The contractor will keep a record of these items on site in the construction trailer. A Stormwater Pollution Prevention Plan will be filed prior to commencement of construction.

TEMPORARY STORMWATER SECTION

ATTACHMENT "J"

The project's limits of construction are primarily confined to the existing right-of-ways, easements, and project site. The project will begin with rough cutting of site. The utilities will be installed. The backfill behind the curbs and paving will be completed and within 120 days. The backfill behind the curbs and embankments will be revegetated with hydro mulch mix to be determined by the City of Leander to stabilize the soil. Stabilization measures shall be initiated as soon as practicable in portions of the site where construction activities have temporarily or permanently ceased, but in no case more than 14 days after the construction activity in that portion of the site has temporarily or permanently ceased. Where the initiation of stabilization measures by the 14th day after construction activity temporary or permanently cease is precluded by weather conditions, stabilization measures shall be initiated as soon as practicable. Where construction activity on a portion of the site is temporarily ceased, and earth disturbing activities will be resumed within 21 days, temporary stabilization measures do not have to be initiated on that portion of site. In areas experiencing droughts where the initiation of stabilization measures by the 14th day after construction activity has temporarily or permanently ceased is precluded by seasonal arid conditions, stabilization measures shall be initiated as soon as practicable.

IV. AGENT AUTHORIZATION FORM

Agent Authorization Form
For Required Signature
Edwards Aquifer Protection Program
Relating to 30 TAC Chapter 213
Effective June 1, 1999

I Rich Christiano,
Print Name

Authorized Agent,
Title - Owner/President/Other

of Gehan Homes,
Corporation/Partnership/Entity Name

have authorized Lee A. Whited, P.E. (102471)
Print Name of Agent/Engineer

of Carlson, Brigance, & Doering, Inc. (512-280-5160)
Print Name of Firm

to represent and act on the behalf of the above named Corporation, Partnership, or Entity for the purpose of preparing and submitting this plan application to the Texas Commission on Environmental Quality (TCEQ) for the review and approval consideration of regulated activities.

I also understand that:

1. The applicant is responsible for compliance with 30 Texas Administrative Code Chapter 213 and any condition of the TCEQ's approval letter. The TCEQ is authorized to assess administrative penalties of up to $10,000 per day per violation.

2. For those submitting an application who are not the property owner, but who have the right to control and possess the property, additional authorization is required from the owner.

3. Application fees are due and payable at the time the application is submitted. The application fee must be sent to the TCEQ cashier or to the appropriate regional office. The application will not be considered until the correct fee is received by the commission.

4. A notarized copy of the Agent Authorization Form must be provided for the person preparing the application, and this form must accompany the completed application.

5. No person shall commence any regulated activity on the Edwards Aquifer Recharge Zone, Contributing Zone or Transition Zone until the appropriate application for the activity has been filed with and approved by the Executive Director.

SIGNATURE PAGE:

Applicant's Signature

6/3/2020
Date

THE STATE OF Texas §

County of Travis §

BEFORE ME, the undersigned authority, on this day personally appeared Rich Christiano known to me to be the person whose name is subscribed to the foregoing instrument, and acknowledged to me that (s)he executed same for the purpose and consideration therein expressed.

GIVEN under my hand and seal of office on this 3rd day of June, 2020.

Kirsten Bolt
NOTARY PUBLIC

KIRSTEN BOLT
Notary ID #131795459
My Commission Expires
November 13, 2022

Kirsten Bolt
Typed or Printed Name of Notary

MY COMMISSION EXPIRES: 11/13/2022

V. APPLICATION FEE FORM

VI. TCEQ CORE DATA FORM

Application Fee Form

Texas Commission on Environmental Quality
Name of Proposed Regulated Entity: Homestead Phase 3
Regulated Entity Location: Leander, TX (Williamson County)
Name of Customer: Gehan Homes
Contact Person: Rich Christiano Phone: 512-330-9366
Customer Reference Number (if issued):CN 601574049
Regulated Entity Reference Number (if issued):RN 110763786

Austin Regional Office (3373)

☐ Hays ☐ Travis ☒ Williamson

San Antonio Regional Office (3362)

☐ Bexar ☐ Medina ☐ Uvalde
☐ Comal ☐ Kinney

Application fees must be paid by check, certified check, or money order, payable to the **Texas Commission on Environmental Quality**. Your canceled check will serve as your receipt. **This form must be submitted with your fee payment**. This payment is being submitted to:

☒ Austin Regional Office
☐ Mailed to: TCEQ - Cashier
Revenues Section
Mail Code 214
P.O. Box 13088
Austin, TX 78711-3088

☐ San Antonio Regional Office
☐ Overnight Delivery to: TCEQ - Cashier
12100 Park 35 Circle
Building A, 3rd Floor
Austin, TX 78753
(512)239-0357

Site Location (Check All That Apply):

☐ Recharge Zone ☒ Contributing Zone ☐ Transition Zone

Type of Plan	***Size***	***Fee Due***
Water Pollution Abatement Plan, Contributing Zone Plan: One Single Family Residential Dwelling	Acres	$
Water Pollution Abatement Plan, Contributing Zone Plan: Multiple Single Family Residential and Parks	Acres	$
Water Pollution Abatement Plan, Contributing Zone Plan: Non-residential	18.21 Acres	$ 6500.00
Sewage Collection System	L.F.	$
Lift Stations without sewer lines	Acres	$
Underground or Aboveground Storage Tank Facility	Tanks	$
Piping System(s)(only)	Each	$
Exception	Each	$
Extension of Time	Each	$

Signature: _____ Date: 09/03/2020

Application Fee Schedule

Texas Commission on Environmental Quality

Edwards Aquifer Protection Program 30 TAC Chapter 213 (effective 05/01/2008)

Water Pollution Abatement Plans and Modifications

Contributing Zone Plans and Modifications

Project	*Project Area in Acres*	*Fee*
One Single Family Residential Dwelling	< 5	$650
Multiple Single Family Residential and Parks	< 5 5 < 10 10 < 40 40 < 100 100 < 500 ≥ 500	$1,500 $3,000 $4,000 $6,500 $8,000 $10,000
Non-residential (Commercial, industrial, institutional, multi-family residential, schools, and other sites where regulated activities will occur)	< 1 1 < 5 5 < 10 10 < 40 40 < 100 ≥ 100	$3,000 $4,000 $5,000 $6,500 $8,000 $10,000

Organized Sewage Collection Systems and Modifications

Project	*Cost per Linear Foot*	*Minimum Fee-Maximum Fee*
Sewage Collection Systems	$0.50	$650 - $6,500

Underground and Aboveground Storage Tank System Facility Plans and Modifications

Project	*Cost per Tank or Piping System*	*Minimum Fee-Maximum Fee*
Underground and Aboveground Storage Tank Facility	$650	$650 - $6,500

Exception Requests

Project	*Fee*
Exception Request	$500

Extension of Time Requests

Project	*Fee*
Extension of Time Request	$150

TCEQ Core Data Form

TCEQ Use Only

For detailed instructions regarding completion of this form, please read the Core Data Form Instructions or call 512-239-5175.

SECTION I: General Information

1. Reason for Submission (If other is checked please describe in space provided.)

☒ New Permit, Registration or Authorization (Core Data Form should be submitted with the program application.)

☐ Renewal (Core Data Form should be submitted with the renewal form) ☐ Other

2. Customer Reference Number (if issued)	Follow this link to search for CN or RN numbers in Central Registry**	3. Regulated Entity Reference Number (if issued)
CN 601574049		RN 110763786

SECTION II: Customer Information

4. General Customer Information	5. Effective Date for Customer Information Updates (mm/dd/yyyy)	08/11/2020

☐ New Customer ☒ Update to Customer Information ☐ Change in Regulated Entity Ownership

☐ Change in Legal Name (Verifiable with the Texas Secretary of State or Texas Comptroller of Public Accounts)

The Customer Name submitted here may be updated automatically based on what is current and active with the Texas Secretary of State (SOS) or Texas Comptroller of Public Accounts (CPA).

6. Customer Legal Name (If an individual, print last name first: e.g.: Doe, John) — If new Customer, enter previous Customer below:

Gehan Homes

7. TX SOS/CPA Filing Number	8. TX State Tax ID (11 digits)	9. Federal Tax ID (9 digits)	10. DUNS Number (if applicable)
		75-255198	

11. Type of Customer: ☒ Corporation ☐ Individual Partnership: ☐ General ☐ Limited

Government: ☐ City ☐ County ☐ Federal ☐ State ☐ Other ☐ Sole Proprietorship ☐ Other:

12. Number of Employees

☐ 0-20 ☒ 21-100 ☐ 101-250 ☐ 251-500 ☐ 501 and higher

13. Independently Owned and Operated? ☐ Yes ☒ No

14. Customer Role (Proposed or Actual) - as it relates to the Regulated Entity listed on this form. Please check one of the following:

☐ Owner ☐ Operator ☒ Owner & Operator

☐ Occupational Licensee ☐ Responsible Party ☐ Voluntary Cleanup Applicant ☐ Other:

15. Mailing Address:	3815 S. Capital of Texas Hwy, Suite 275, Barton Creek Plaza III						
	City	Austin	State	TX	ZIP	78704	ZIP + 4

16. Country Mailing Information (if outside USA)	17. E-Mail Address (if applicable)
	sbarksdale@gehanhomes.com

18. Telephone Number	19. Extension or Code	20. Fax Number (if applicable)
(512) 330 - 9366		( ) -

SECTION III: Regulated Entity Information

21. General Regulated Entity Information (If "New Regulated Entity" is selected below this form should be accompanied by a permit application)

☒ New Regulated Entity ☐ Update to Regulated Entity Name ☐ Update to Regulated Entity Information

The Regulated Entity Name submitted may be updated in order to meet TCEQ Agency Data Standards (removal of organizational endings such as Inc, LP, or LLC).

22. Regulated Entity Name (Enter name of the site where the regulated action is taking place.)

Homestead Phase 3

23. Street Address of the Regulated Entity: (No PO Boxes)	4807-4247 CR 279						
	City	Leander	State	TX	ZIP	78641	ZIP + 4
24. County	Williamson						

Enter Physical Location Description if no street address is provided.

25. Description to Physical Location:	From Austin: TX-1 Loop North, to TX-183 North, left on Hero Way West, Right on Bagdad Road, 1800 feet North of intersection of Bagdad Road and Collaborative Way.

26. Nearest City	State	Nearest ZIP Code
Leander	TX	78641

27. Latitude (N) In Decimal:	30.60357		28. Longitude (W) In Decimal:	-97.8903	
Degrees	Minutes	Seconds	Degrees	Minutes	Seconds
30	36	12.90	-97	53	25

29. Primary SIC Code (4 digits)	30. Secondary SIC Code (4 digits)	31. Primary NAICS Code (5 or 6 digits)	32. Secondary NAICS Code (5 or 6 digits)
1542	1794	237110	238910

33. What is the Primary Business of this entity? (Do not repeat the SIC or NAICS description.)

Single Family Subdivision

34. Mailing Address:	Gehan Homes						
	3815 S. Capital of Texas Hwy, Suite 275, Barton Creek Plaza III						
	City	Austin	State	TX	ZIP	78704	ZIP + 4
35. E-Mail Address:	sbarksdale@gehanhomes.com						

36. Telephone Number	37. Extension or Code	38. Fax Number (if applicable)
(512) 330 - 9366		( ) -

39. **TCEQ Programs and ID Numbers** Check all Programs and write in the permits/registration numbers that will be affected by the updates submitted on this form. See the Core Data Form instructions for additional guidance.

☐ Dam Safety	☐ Districts	☐ Edwards Aquifer	☐ Emissions Inventory Air	☐ Industrial Hazardous Waste
☐ Municipal Solid Waste	☐ New Source Review Air	☐ OSSF	☐ Petroleum Storage Tank	☐ PWS
☐ Sludge	☐ Storm Water	☐ Title V Air	☐ Tires	☐ Used Oil
☐ Voluntary Cleanup	☐ Waste Water	☐ Wastewater Agriculture	☐ Water Rights	☐ Other:

SECTION IV: Preparer Information

40. Name: Lee A. Whited			41. Title: P.E.
42. Telephone Number	43. Ext./Code	44. Fax Number	45. E-Mail Address
(512) 280 - 5160		( ) -	lee@cbdeng.com

SECTION V: Authorized Signature

46. By my signature below, I certify, to the best of my knowledge, that the information provided in this form is true and complete, and that I have signature authority to submit this form on behalf of the entity specified in Section II, Field 6 and/or as required for the updates to the ID numbers identified in field 39.

Company:	Carlson, Brigance and Doering, Inc.	Job Title:	P.E.
Name(*In Print*):	Lee A. Whited	Phone:	(512) 280-5160
Signature:		Date:	8-26-20

HOMESTEAD
PHASE 3
PUBLIC IMPROVEMENT CONSTRUCTION PLANS
PROJECT NO. 20-PICP-011

SUBMITTED BY:

8-10-20

CARLSON, BRIGANCE & DOERING, INC. DATE

APPROVED BY:

WAYNE S. WATTS, P.E., CFM, CITY ENGINEER DATE
CITY OF LEANDER, TEXAS

APPROVED BY:

ROBIN M. GRIFFIN, AICP, PLANNING DIRECTOR DATE
CITY OF LEANDER, TEXAS

APPROVED BY:

MARK TUMMONS, DIRECTOR OF PARKS AND RECREATION DATE
CITY OF LEANDER, TEXAS

APPROVED BY:

GINA ELLISON, P.E., PUBLIC WORKS DIRECTOR DATE
CITY OF LEANDER, TEXAS

APPROVED BY:

CHIEF JOSHUA DAVIS, FIRE MARSHAL DATE
CITY OF LEANDER, TEXAS

GENERAL NOTES:

1. ALL EASEMENTS ON PRIVATE PROPERTY SHALL BE MAINTAINED BY THE PROPERTY OWNER OR HIS OR HER ASSIGNS.
2. THE HOA WILL OWN AND MAINTAIN THE FOLLOWING LOTS:

   BLOCK I, LOTS 4
   BLOCK H, LOTS 47 & 48
3. THE HOMEOWNERS ASSOCIATION IS REQUIRED TO MOW AND MAINTAIN LANDSCAPING IN THE OPEN CHANNELS, DETENTION AND WATER QUALITY AREAS.
4. THE CITY ACCEPTS AND MAINTAINS DRAINAGE AND WATER QUALITY IMPROVEMENTS CONTAINED IN OPEN CHANNELS, DETENTION AND WATER QUALITY AREAS. THE CITY WILL ALSO ACCEPT AND MAINTAIN WATER, WASTEWATER AND STREETS.

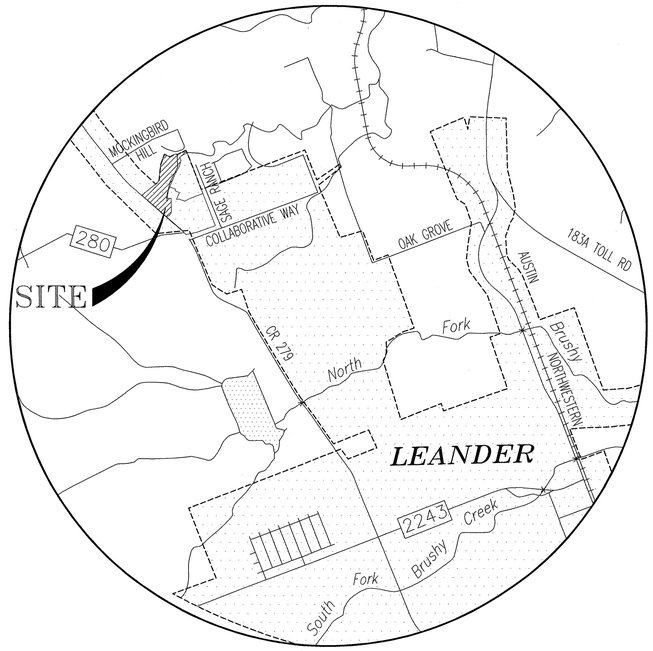

LOCATION MAP
1"=2000'

Sheet Number	Sheet Title
1	COVER SHEET
2	GENERAL NOTES
3	PLAT (SHEET 1 & 2)
4	PLAT (SHEET 3)
5	PRELIMINARY PLAT
6	EXISTING FLOODPLAIN
7	PROPOSED FLOODPLAIN
8	EROSION CONTROL PLAN
9	TREE LIST
10	EROSION CONTROL DETAILS & NOTES
11	THISTLE HILL DRIVE (0+00 TO 5+00)
12	THISTLE HILL DRIVE (5+00 TO 9+50)
13	THISTLE HILL DRIVE (9+50 TO END)
14	LACKEY COVE (0+00 TO END)
15	OVERALL DRAINAGE PLAN
16	DRAINAGE AREA AND CALCULATIONS PLAN
17	AREA GRADING PLAN
18	STORM SEWER LINE 'A' (0+00 to 7+00)
19	STORM SEWER LINE 'A' (7+00 to END)
20	STORM SEWER LINE 'B' & 'C' (0+00 to END)
21	STORM SEWER LATERALS
22	WATER QUALITY - POND B
23	WATER QUALITY - POND B SECTIONS
24	WATER QUALITY - POND DETAILS
25	ELECTICAL NOTES SYMBOLS & ABBREIVATIONS
26	ELECTRICAL SPECIFICATIONS
27	ELECTRICAL OVERALL SITE PLAN
28	ELECTRICAL SITE PLAN-NEW BATCH POND 1
29	ELECTRICAL LADDER DIAGRAM
30	ELECTRICAL DETAILS
31	WATER DISTRIBUTION PLAN
32	OVERALL WASTEWATER COLLECTION PLAN
33	WASTEWATER LINE 'A' PLAN & PROFILE (0+00 TO END)
34	WASTEWATER LINE 'B' & 'C' PLAN & PROFILE (0+00 TO END)
35	WASTEWATER LINE 'D' PLAN & PROFILE (0+00 TO END)
36	TRAFFIC CONTROL PLAN
37	TRAFFIC CONTROL PLAN & TXDOT DETAILS
38	LIGHTING STREET SIGNAGE STRIPING & SIDEWALK PLAN
39	STANDARD CONSTRUCTION DETAILS (1 OF 3)
40	STANDARD CONSTRUCTION DETAILS (2 OF 3)
41	STANDARD CONSTRUCTION DETAILS (3 OF 3)
42	STANDARD WATER & WASTEWATER DETAILS (1 OF 2)
43	STANDARD WATER & WASTEWATER DETAILS (2 OF 2)
44	(E1.0) ELECTRICAL NOTES SYMBOLS & ABBREVIATIONS
45	(E1.1) ELECTRICAL SPECIFICATIONS
46	(E2.0) ELECTRICAL SITE LIGHTING PLAN
47	(E3.0) ELECTRICAL DETAILS
48	(E4.0) SITE LIGHTING PHOTOMETRICS PLAN
49	(E5.0) RESIDENTIAL ROADWAY LIGHTING STANDARDS
50	(E5.1) RESIDENTIAL ROADWAY LIGHTING STANDARDS
51	(E5.2) RESIDENTIAL ROADWAY LIGHTING STANDARDS
52	(LN-1) CONSTRUCTION-PLANTING NOTES
53	(LP-NI)LANDSCAPE NOTES PLAN SCHEDULE
54	(LP-1.0) OVERALL LAYOUT PLAN
55	(LP-1.1) PLANTING PLAN
56	(LP-1.2) PLANTING PLAN
57	(LP-1.3) PLANTING PLAN
58	(LP-1.4) PLANTING PLAN
59	(LP-1.5) MAIJOR CORRIDOR STREETSCAPE PLAN
60	(LP-D1) HARDSCAPE DETAILS
61	(LP-D2) PLANTING DETAILS

INITIAL SUBMITTAL DATE: 03/24/2020

OWNER & DEVELOPER:
GEHAN HOMES, LTD.
3815 S. CAPITAL OF TEXAS HIGHWAY
SUITE 275
AUSTIN, TEXAS 78704
(512) 330-9366 PHONE
(512) 900-2934 FAX

ENGINEER & SURVEYOR:
CARLSON, BRIGANCE & DOERING, INC.
5501 WEST WILLIAM CANNON DRIVE
AUSTIN, TEXAS 78749
PHONE: (512) 280-5160
FAX: (512) 280-5165

LEGAL DESCRIPTION:
HOMESTEAD, PHASE 3
WILLIAMSON COUNTY, TEXAS

TOTAL ACREAGE: 18.21 ACRES
SURVEY: CHARLES COCHRAN SURVEY, ABSTRACT NO. 134

SITE LOCATION:
THIS SUBDIVISION IS CONTAINED WITHIN THE CURRENT CORPORATE LIMITS OF THE CITY OF LEANDER, TEXAS AND IS IS SUBJECT TO THE CITY OF LEANDER SUBDIVISION ORDINANCE.

FEMA:
NO PORTION OF THIS TRACT IS LOCATED WITHIN A FLOOD HAZARD AREA AS SHOWN ON THE FLOOD INSURANCE RATE MAP PANEL # 48491C 0435E, FOR WILLIAMSON COUNTY, EFFECTIVE SEPTEMBER 26, 2008.

REVISION #	DESCRIPTION	APPROVAL

FOR CITY OF LEANDER USE

20-PICP-011

DESIGNED BY:	DRAFTED BY:
LAW	ZHL & CMC

REVISION	DATE
INITIAL SUBMITTAL	03.24.20
UPDATE #1 SUBMITTAL	05.18.20
UPDATE #2 SUBMITTAL	07.28.20

Carlson, Brigance & Doering, Inc.
Civil Engineering ◆ Surveying
FIRM ID #F3791
Main Office
5501 West William Cannon Dr.
Austin, Texas 78749
Phone No. (512) 280-5160
North Office
12129 RR 620 N., Ste. 600
Austin, Texas 78750
Fax No. (512) 280-5165

SHEET NAME: COVER SHEET
JOB NAME: HOMESTEAD PHASE 3
PROJECT: STREET, DRAINAGE, WATER, AND WASTEWATER IMPROVEMENTS

8/10/2020
STATE OF TEXAS
LEE A. WHITED
102471
LICENSED PROFESSIONAL ENGINEER
CARLSON, BRIGANCE & DOERING, INC.
ID# F3791

DATE NOVEMBER 2019
JOB NUMBER 5172
SHEET 1 OF 61
SHEET NO. 1

FILE PATH:I:\AD\5172\dwg\5172-COVER.dwg - Aug 10, 2020 - 4:19pm

GENERAL NOTES

REVISED FEBRUARY 25, 2020

1. THE CONTRACTOR SHALL VERIFY ALL DEPTHS AND LOCATIONS OF EXISTING UTILITIES PRIOR TO ANY CONSTRUCTION. ANY DISCREPANCIES WITH CONSTRUCTION PLANS FOUND IN THE FIELD SHALL BE BROUGHT IMMEDIATELY TO THE ATTENTION OF THE ENGINEER.

2. THE CONTRACTOR SHALL CONTACT THE TEXAS EXCAVATION SYSTEM AT 1-800-344-8377 FOR EXISTING UTILITY LOCATIONS 48 HOURS PRIOR TO THE START OF CONSTRUCTION. THE CONTRACTOR SHALL VERIFY THE LOCATIONS OF ALL UTILITIES THAT ARE TO BE EXTENDED, TIED TO, CROSSED, OR ALTERED; OR SUBJECT TO DAMAGE/INCONVENIENCE BY THE CONSTRUCTION OPERATIONS.

3. CONTACT THE CITY OF LEANDER PUBLIC WORKS DEPARTMENT FOR EXISTING WATER, WASTEWATER, STREET LIGHT ELECTRICAL WIRING, AND TRAFFIC SIGNAL WIRING LOCATIONS A MINIMUM OF 48 HOURS PRIOR TO START OF CONSTRUCTION.
a. LOCATE REQUESTS MUST INCLUDE A COPY OF YOUR 811 TICKET.
b. REFRESH ALL LOCATES BEFORE 14 DAYS - LOCATE REFRESH REQUESTS MUST INCLUDE A COPY OF YOUR 811 TICKET. TEXAS PIPELINE DAMAGE PREVENTION LAWS REQUIRE THAT A LOCATE REFRESH REQUEST BE SUBMITTED BEFORE 14 DAYS, OR IF LOCATION MARKERS ARE NO LONGER VISIBLE.
c. REPORT ALL DAMAGE TO CITY INFRASTRUCTURE IMMEDIATELY - IF YOU WITNESS OR EXPERIENCE EXCAVATION DAMAGE, PLEASE CONTACT THE CITY OF LEANDER PUBLIC WORKS DEPARTMENT BY PHONE. IF DAMAGE IS WITNESSED OR EXPERIENCED AFTER HOURS, CALL THE CITY OF LEANDER UTILITIES ON-CALL LINE AT THE NUMBER LISTED ABOVE.

4. ANY CHANGES OR REVISIONS TO THESE PLANS MUST FIRST BE SUBMITTED TO THE CITY BY THE DESIGN ENGINEER FOR REVIEW AND WRITTEN APPROVAL PRIOR TO CONSTRUCTION OF THE REVISION.

5. A TRAFFIC CONTROL PLAN, IN ACCORDANCE WITH THE TEXAS MANUAL ON UNIFORM TRAFFIC CONTROL DEVICES, SHALL BE SUBMITTED TO THE CITY FOR REVIEW AND APPROVAL PRIOR TO ANY PARTIAL OR COMPLETE ROADWAY CLOSURES. TRAFFIC CONTROL PLANS SHALL BE SITE SPECIFIC AND SEALED BY A REGISTERED PROFESSIONAL ENGINEER. LANE CLOSURES ON ARTERIALS AND ANY FULL ROAD CLOSURES REQUIRE MESSAGE BOARDS NOTIFYING THE PUBLIC ONE WEEK PRIOR TO THE CLOSURE.

6. NO WORK IS TO BE PERFORMED BETWEEN THE HOURS OF 6:00 P.M. AND 7:00 A.M. THE CITY INSPECTOR RESERVES THE RIGHT TO REQUIRE THE CONTRACTOR TO UNCOVER ALL WORK PERFORMED WITHOUT INSPECTION. FURTHER, THERE IS A NOISE ORDINANCE IN EFFECT FOR CONSTRUCTION ACTIVITY BETWEEN THE HOURS OF 9 PM AND 7 AM. REQUESTS FOR EXCEPTIONS TO THE ORDINANCE MUST BE MADE TO LEANDER CITY COUNCIL.

7. CONTACT THE CITY INSPECTOR 4 DAYS PRIOR TO WORK TO SCHEDULE ANY INSPECTIONS ON WEEKENDS OR CITY HOLIDAYS.

8. NO STREET LIGHTS OR SIGNS OF ANY KIND ARE TO BE PLACED WITHIN ANY SIDEWALKS.

9. NO BLASTING IS ALLOWED.

10. ANY EXISTING UTILITIES, PAVEMENT, CURBS, SIDEWALKS, STRUCTURES, TREES, ETC., THAT ARE DAMAGED OR REMOVED SHALL BE REPAIRED OR REPLACED BY THE CONTRACTOR AT NO COST TO THE OWNER.

11. THE CONTRACTOR SHALL GIVE THE CITY OF LEANDER 48 HOURS NOTICE BEFORE BEGINNING EACH PHASE OF CONSTRUCTION. CONTACT ASSIGNED CITY INSPECTOR.

12. A PRE-CONSTRUCTION CONFERENCE SHALL BE HELD WITH THE CONTRACTOR, DESIGN ENGINEER/PERMIT APPLICANT AND THE CITY OF LEANDER REPRESENTATIVES PRIOR TO INSTALLATION OF EROSION/SEDIMENTATION CONTROLS AND TREE PROTECTION MEASURES AND PRIOR TO BEGINNING ANY WORK. THE CONTRACTOR SHALL NOTIFY THE CITY OF LEANDER PLANNING DEPARTMENT PLANNING COORDINATOR AT LEAST THREE (3) DAYS PRIOR TO THE MEETING DATE.

13. THE CONTRACTOR AND ENGINEER SHALL KEEP ACCURATE RECORDS OF ALL CONSTRUCTION THAT DEVIATES FROM THE PLANS. THE ENGINEER SHALL FURNISH THE CITY OF LEANDER ACCURATE "RECORD DRAWINGS" FOLLOWING THE COMPLETION OF ALL CONSTRUCTION. THESE "RECORD DRAWINGS" SHALL MEET THE SATISFACTION OF THE ENGINEERING DEPARTMENTS PRIOR TO FINAL ACCEPTANCE

14. WHEN CONSTRUCTION IS BEING CARRIED OUT WITHIN EASEMENTS, THE CONTRACTOR SHALL CONFINE HIS WORK TO WITHIN THE PERMANENT AND TEMPORARY EASEMENTS. PRIOR TO ACCEPTANCE, THE CONTRACTOR SHALL BE RESPONSIBLE FOR REMOVING ALL TRASH AND DEBRIS WITHIN THE PERMANENT EASEMENTS. CLEANUP SHALL BE TO THE SATISFACTION OF THE ENGINEER.

15. CONTRACTOR TO LOCATE, PROTECT, AND MAINTAIN BENCHMARKS, MONUMENTS, CONTROL POINTS AND PROJECT ENGINEERING REFERENCE POINTS. RE-ESTABLISH DISTURBED OR DESTROYED ITEMS BY REGISTERED PROFESSIONAL LAND SURVEYOR IN THE STATE OF TEXAS, AT NO ADDITIONAL COST TO OWNER.

16. THE CONTRACTOR SHALL PROTECT ALL EXISTING FENCES. IN THE EVENT THAT A FENCE MUST BE REMOVED, THE CONTRACTOR SHALL REPLACE SAID FENCE OR PORTION THEREOF WITH THE SAME TYPE OF FENCING TO A QUALITY OF EQUAL OR BETTER THAN THE ORIGINAL FENCE.

17. ALL CONSTRUCTION SHALL BE IN ACCORDANCE WITH THE LATEST CITY OF AUSTIN STANDARD SPECIFICATIONS. CITY OF AUSTIN STANDARDS SHALL BE USED UNLESS OTHERWISE NOTED IN DETAILS.

18. ALL CONSTRUCTION OPERATIONS SHALL BE ACCOMPLISHED IN ACCORDANCE WITH APPLICABLE REGULATIONS OF THE U.S. OCCUPATIONAL SAFETY AND HEALTH ADMINISTRATION (OSHA). OSHA STANDARDS MAY BE PURCHASED FROM THE GOVERNMENT PRINTING OFFICE; INFORMATION AND RELATED REFERENCE MATERIALS MAY BE PURCHASED FROM OSHA, 1033 LA POSADA DR. SUITE 375, AUSTIN, TEXAS 78752-3832.

19. ALL MATERIALS AND CONSTRUCTION PROCEDURES WITHIN THE SCOPE OF THIS CONTRACT WHERE NOT SPECIFICALLY COVERED IN THE PROJECT SPECIFICATIONS SHALL CONFORM TO ALL CITY OF LEANDER DETAILS AND CITY OF AUSTIN STANDARD SPECIFICATIONS.

20. PROJECT SPECIFICATIONS TAKE PRECEDENCE OVER PLANS AND SPECIAL CONDITIONS GOVERN OVER TECHNICAL SPECIFICATIONS.

21. HOT MIX ASPHALTIC CONCRETE PAVEMENT SHALL BE MINIMUM THICKNESS OF 2 INCHES WITH NO RECYCLED ASPHALT SHINGLES CONTENT.

22. CONTRACTOR SHALL IMMEDIATELY NOTIFY THE ENGINEER OF ANY QUESTIONS THAT MAY RISE CONCERNING THE INTENT, PLACEMENT, OR LIMITS OF DIMENSIONS OR GRADES NECESSARY FOR THE CONSTRUCTION OF THIS PROJECT.

23. CONTRACTOR SHALL BE RESPONSIBLE FOR ACQUIRING ALL PERMITS, TESTS, APPROVALS AND ACCEPTANCES REQUIRED TO COMPLETE CONSTRUCTION OF THIS PROJECT.

24. THE CONTRACTOR SHALL BE RESPONSIBLE FOR ALL COORDINATION BETWEEN HIMSELF AND OTHER CONTRACTORS AND UTILITIES IN THE VICINITY OF THE PROJECT. THIS INCLUDES GAS, WATER, WASTEWATER, ELECTRICAL, TELEPHONE, CABLE TV AND STREET DRAINAGE WORK. ONCE THE CONTRACTOR BECOMES AWARE OF A POSSIBLE CONFLICT, IT IS THE CONTRACTOR'S RESPONSIBILITY TO NOTIFY THE ENGINEER WITHIN TWENTY-FOUR (24) HOURS.

25. THE CONTRACTOR MUST OBTAIN A CONSTRUCTION WATER METER FOR ALL WATER USED DURING CONSTRUCTION. A COPY OF THIS PERMIT MUST BE CARRIED AT ALL TIMES BY ALL WHO USE WATER.

26. CONTRACTOR SHALL BE RESPONSIBLE FOR KEEPING ROADS AND DRIVES ADJACENT TO AND NEAR THE SITE FREE FROM SOIL, SEDIMENT AND DEBRIS. CONTRACTOR WILL NOT REMOVE SOIL, SEDIMENT OR DEBRIS FROM ANY AREA OR VEHICLE BY MEANS OF WATER. ONLY SHOVELING AND SWEEPING WILL BE ALLOWED. CONTRACTOR WILL BE RESPONSIBLE FOR DUST CONTROL FROM THE SITE.

FILE PATH:J:\AC3D\5172\dwg\5172-GENERAL NOTES.dwg - Aug 10, 2020 - 4:20pm

GENERAL NOTES (cont)

26. THE CITY OF LEANDER SHALL NOT BE PETITIONED FOR ACCEPTANCE UNTIL ALL NECESSARY EASEMENT DOCUMENTS HAVE BEEN SIGNED AND RECORDED.

27. AN ENGINEER'S CONCURRENCE LETTER AND RECORD DRAWINGS SHALL BE SUBMITTED TO THE ENGINEERING DEPARTMENT PRIOR TO THE ISSUANCE OF CERTIFICATE OF COMPLETION OR SUBDIVISION ACCEPTANCE. THE ENGINEER AND CONTRACTOR SHALL VERIFY THAT ALL FINAL REVISIONS AND CHANGES HAVE BEEN MADE TO THE DIGITAL COPY PRIOR TO CITY SUBMITTAL. RECORD CONSTRUCTION DRAWINGS, INCLUDING ROADWAY AND ALL UTILITIES SHALL BE PROVIDED TO THE CITY IN DIGITAL FORMAT AS AUTOCAD ".DWG" FILES, MICROSTATION ".DGN" FILES OR ESRI ".SHP" FILES ON CD ROM. LINE WEIGHTS, LINE TYPES

28. AND TEXT SIZE SHALL BE SUCH THAT IF HALF-SIZE PRINTS (11"X17") WERE PRODUCED, THE PLANS WOULD STILL BE LEGIBLE. ALL REQUIRED DIGITAL FILES SHALL CONTAIN A MINIMUM OF TWO CONTROL POINTS REFERENCED TO THE STATE PLANE GRID COORDINATE SYSTEM - TEXAS CENTRAL ZONE (4203), IN US SURVEY FEET AND SHALL INCLUDE ROTATION INFORMATION AND SCALE FACTOR REQUIRED TO REDUCE SURFACE COORDINATES TO GRID COORDINATES IN US SURVEY FEET

29. TREES IN EXISTING ROW SHOULD BE PROTECTED OR NOTED IN THE PLANS TO BE REMOVED.

CONSTRUCTION SEQUENCE NOTES

1. GENERAL CONTRACTOR TO INSTALL AND MAINTAIN EROSION CONTROLS AND TREE PROTECTION PER APPROVED PLANS.

2. HOLD PRE-CONSTRUCTION CONFERENCE. CALL PLANNING DEPARTMENT FOR A PRE-CONSTRUCTION MEETING, 528-2763, 48 HOURS PRIOR TO BEGINNING ANY WORK. CALL THE "ONE CALL" SYSTEM AT 1-800-545-6005 FOR EXISTING UTILITY LOCATIONS AND OR ANY WORK WITHIN CITY OF LEANDER R.O.W. ALSO, NOTIFY PWD CONSTRUCTION INSPECTION DIVISION WHEN INSTALLED.

3. ROUGH CUT ALL REQUIRED OR NECESSARY PONDS. EITHER THE PERMANENT OUTLET STRUCTURE OR A TEMPORARY OUTLET MUST BE CONSTRUCTED PRIOR TO DEVELOPMENT OF ANY EMBANKMENT OR EXCAVATION THAT LEADS TO PONDING CONDITIONS. THE OUTLET SYSTEM MUST CONSIST OF A LOW-LEVEL OUTLET AND AN EMERGENCY OVERFLOW. THE OUTLET SYSTEM SHALL BE PROTECTED FROM EROSION AND SHALL BE MAINTAINED THROUGHOUT THE COURSE OF CONSTRUCTION UNTIL FINAL RESTORATION IS ACHIEVED.

4. ROUGH GRADE STREETS. NO DEVELOPMENT OF EMBANKMENT WILL BE PERMITTED AT THIS TIME. ONCE STREETS ARE ROUGH CUT, THE GEOTECHNICAL ENGINEER IS TO FIELD VERIFY PAVEMENT DESIGN IS APPROPRIATE, AND MODIFY RECOMMENDATIONS ACCORDINGLY.

5. INSTALL ALL UTILITIES TO BE LOCATED UNDER THE PROPOSED PAVEMENT.

6. DELIVER STORM SEWER CUT SHEETS TO THE CONSTRUCTION INSPECTION DIVISION OF DPW.

7. BEGIN INSTALLATION OF STORM SEWER LINES. UPON COMPLETION, RESTORE AS MUCH DISTURBED AREA AS POSSIBLE, PARTICULARLY CHANNELS AND LARGE OPEN AREAS.

8. DELIVER FINAL GRADE CUT SHEETS TO THE CONSTRUCTION INSPECTION DIVISION OF DPW.

9. REGRADE STREETS TO SUBGRADE.

10. INSURE THAT ALL UNDERGROUND UTILITY CROSSINGS ARE COMPLETED. LAY FIRST COURSE BASE MATERIAL ON ALL STREETS.

11. INSTALL CURB AND GUTTER.

12. LAY FINAL BASE COURSE ON ALL STREETS.

13. LAY ASPHALT.

14. COMPLETE ALL UNDERGROUND INSTALLATIONS WITHIN THE R.O.W.

15. COMPLETE PERMANENT EROSION CONTROL AND RESTORATION OF SITE VEGETATION.

16. THE PROJECT ENGINEER INSPECTS JOB AND WRITES CONCURRENCE LETTER TO THE CITY. FINAL INSPECTION IS SCHEDULED UPON RECEIPT OF LETTER.

17. REMOVE AND DISPOSE OF TEMPORARY EROSION CONTROLS.

18. COMPLETE ANY NECESSARY FINAL DRESS UP OF AREAS DISTURBED BY ITEM 17.

EROSION CONTROL NOTES

1. THE CONTRACTOR SHALL INSTALL EROSION/SEDIMENTATION CONTROLS AND TREE PROTECTIVE FENCING PRIOR TO ANY WORK (CLEARING, GRUBBING OR EXCAVATION). CONTACT STORMWATER INSPECTOR FOR ON SITE INSPECTION PRIOR TO BEGINNING CONSTRUCTION.

2. THE CONTRACTOR IS REQUIRED TO INSPECT THE CONTROLS AND FENCES AT WEEKLY INTERVALS AND AFTER SIGNIFICANT RAINFALL EVENTS TO ENSURE THAT THEY ARE FUNCTIONING PROPERLY. THE PERSON(S) RESPONSIBLE FOR MAINTENANCE OF CONTROLS AND FENCES SHALL IMMEDIATELY MAKE ANY NECESSARY REPAIRS TO DAMAGED AREAS. SILT ACCUMULATION AT CONTROLS MUST BE REMOVED WHEN THE DEPTH REACHES SIX (6) INCHES.

3. THE TEMPORARY SPOILS DISPOSAL SITE IS TO BE SHOWN IN THE EROSION CONTROL MAP.

4. ANY ON-SITE SPOILS DISPOSAL SHALL BE REMOVED PRIOR TO ACCEPTANCE UNLESS SPECIFICALLY SHOWN ON THE PLANS. THE DEPTH OF SPOIL SHALL NOT EXCEED 10 FEET IN ANY AREA.

5. ALL AREAS DISTURBED OR EXPOSED DURING CONSTRUCTION SHALL BE RESTORED WITH A MINIMUM OF 6 INCHES OF TOPSOIL AND COMPOST BLEND. TOPSOIL ON SINGLE FAMILY LOTS MAY BE INSTALLED WITH HOME CONSTRUCTION. THE TOPSOIL AND COMPOST BLEND SHALL CONSIST OF 75% TOPSOIL AND 25% COMPOST.

6. SEEDING FOR REESTABLISHING VEGETATION SHALL COMPLY WITH THE AUSTIN GROW GREEN GUIDE OR WILLIAMSON COUNTY'S PROTOCOL FOR SUSTAINABLE ROADSIDES (SPEC 164--WC001 SEEDING FOR EROSION CONTROL). RESEEDING VARIETIES OF BERMUDA SHALL NOT BE USED.

7. STABILIZED CONSTRUCTION ENTRANCE IS REQUIRED AT ALL POINTS WHERE CONSTRUCTION TRAFFIC IS EXITING THE PROJECT ONTO EXISTING PAVEMENT. LINEAR CONSTRUCTION PROJECTS MAY REQUIRE SPECIAL CONSIDERATION. ROADWAYS SHALL REMAIN CLEAR OF SILT AND MUD.

8. TEMPORARY STOP SIGNS SHOULD BE INSTALLED AT ALL CONSTRUCTION ENTRANCES WHERE A STOP CONDITION DOES NOT ALREADY EXIST.

9. IN THE EVENT OF INCLEMENT WEATHER THAT MAY RESULT IN A FLOODING SITUATION, THE CONTRACTOR SHALL REMOVE INLET PROTETION MEASURES UNTIL SUCH TIME AS THE WEATHER EVENT HAS PASSED.

WATER AND WASTEWATER NOTES

1. PRESSURE TAPS SHALL BE IN ACCORDANCE WITH CITY OF LEANDER STANDARD SPECIFICATIONS. THE CONTRACTOR SHALL PERFORM ALL EXCAVATION, ETC. AND SHALL FURNISH, INSTALL AND AIR TEST THE SLEEVE AND VALVE. A CITY OF LEANDER INSPECTOR MUST BE PRESENT WHEN THE CONTRACTOR MAKES A TAP, AND/OR ASSOCIATED TESTS. A MINIMUM OF TWO (2) WORKING DAYS NOTICE IS REQUIRED. "SIZE ON SIZE" TAPS WILL NOT BE PERMITTED UNLESS MADE BY THE USE OF AN APPROVED FULL-CIRCLE GASKETED TAPPING SLEEVE. CONCRETE BLOCKING SHALL BE PLACED BEHIND AND UNDER ALL TAP SLEEVES A MINIMUM OF 24 HOURS PRIOR TO THE BRANCH BEING PLACED INTO SERVICE. BLOCKING SHALL BE INSPECTED PRIOR TO BACKFILL.

2. FIRE HYDRANTS ON MAINS UNDER CONSTRUCTION SHALL BE SECURELY WRAPPED WITH A BLACK POLY WRAP BAG AND TAPED INTO PLACE. THE POLY WRAP SHALL BE REMOVED WHEN THE MAINS ARE ACCEPTED AND PLACED INTO SERVICE.

3. CURVILINEAR WASTEWATER DESIGN LAYOUT IS NOT PERMITTED.

4. THRUST BLOCKING OR RESTRAINTS SHALL BE IN ACCORDANCE WITH THE CITY OF LEANDER STANDARD SPECIFICATIONS AND REQUIRED AT ALL FITTINGS PER DETAIL OR MANUFACTURES RECOMMENDATION.ALL FITTINGS SHALL HAVE BOTH THRUST BLOCKING AND RESTRAINTS.

5. MANDREL TESTING WILL BE REQUIRED ON ALL WASTEWATER PIPE. PER TCEQ, THIS TEST MUST BE CONDUCTED AFTER THE FINAL BACKFILL HAS BEEN IN PLACE AT LEAST 30 DAYS.

WATER AND WASTEWATER NOTES (cont)

6. ALL NEWLY INSTALLED PIPES AND RELATED PRODUCTS MUST CONFORM TO AMERICAN NATIONAL STANDARDS INSTITUTE/NATIONAL SANITATION FOUNDATION (ANSI/NSF) STANDARD 61 AND MUST BE CERTIFIED BY AND ORGANIZATION ACCREDITED BY ANSI IN ADDITION TO NORMAL COMPACTION METHODS DURING DRY WEATHER CONDITIONS,

7. TRENCH AND MANHOLE BACKFILL IN AND/OR ADJACENT TO STREETS, STRUCTURES, DRIVEWAYS, ETC., SHOULD BE FLOODED TO PROVIDE ADDITIONAL CONSOLIDATION OF BACKFILL DURING CONSTRUCTION PERIODS THAT DO NOT EXPERIENCE SIGNIFICANT RAINFALL EVENTS PRIOR TO SUBGRADE PREPARATION, FLEXIBLE BASE PLACEMENT, PAVING OPERATIONS.

8. ALL WATER SERVICE, WASTEWATER SERVICE AND VALVE LOCATIONS SHALL BE APPROPRIATELY STAMPED AS FOLLOWS:
WATER SERVICE "W" ON TOP OF CURB
WASTEWATER SERVICE "S" ON TOP OF CURB
VALVE "V" ON TOP OF CURB

9. TOOLS FOR STAMPING THE CURBS SHALL BE PROVIDED BY THE CONTRACTOR. OTHER APPROPRIATE MEANS OF STAMPING SERVICE AND VALVE LOCATIONS SHALL BE PROVIDED IN AREAS WITHOUT CURBS. SUCH MEANS OF STAMPING SHALL BE SPECIFIED BY THE ENGINEER AND ACCEPTED BY THE CITY OF LEANDER

10. ALL PLASTIC PIPES FOR USE IN PUBLIC WATER SYSTEMS MUST BEAR THE NATIONAL SANITATION FOUNDATION SEAL OF APPROVAL (NSF-PW) AND HAVE AN ASTM DESIGN PRESSURE RATING OF AT LEAST 200 PSI.

11. NO PIPE OR FITTING WHICH HAS BEEN USED FOR ANY PURPOSE OTHER THAN THE CONVEYANCE OF DRINKING WATER SHALL BE ACCEPTED OR RELOCATED FOR USE IN ANY PUBLIC DRINKING WATER SUPPLY.

12. TYPICAL DEPTH OF COVER FOR ALL WASTEWATER LINES SHALL BE 48" MINIMUM, WATER LINES SHALL BE 36" MINIMUM UNDER BOTH PAVEMENT AND NATURAL GROUND. STORM SEWER SHALL BE 24" MINIMUM UNDER NATURAL GROUND

13. THE HYDROSTATIC LEAKAGE RATE SHALL NOT EXCEED THE AMOUNT ALLOWED OR RECOMMENDED BY AWWA FORMULAS.

14. ALL WATER MAINS, DISTRIBUTION LINES AND SERVICE LINES SHALL BE INSTALLED IN ENCASEMENT PIPE UNDERNEATH EXISTING STREETS AND OTHER PAVED SURFACES UNLESS APPROVED WITH PLANS.

15. ALL MECHANICAL RESTRAINTS SHALL BE INSTALLED IN ACCORDANCE WITH THE MANUFACTURER'S INSTRUCTIONS.

16. ALL DEAD-END WATER MAINS SHALL HAVE THRUST RESTRAINTS INSTALLED ON THE LAST THREE PIPE-LENGTHS (STANDARD 20' LAYING LENGTH), AT MINIMUM, AND THRUST BLOCKS INSTALLED ON THE PLUG. ADDITIONAL THRUST RESTRAINTS MAY BE REQUIRED BASED UPON THE MANUFACTURER'S RECOMMENDATIONS AND/OR CALCULATIONS BY THE ENGINEER OF RECORD.

17. WHERE WATER LINES CROSS WASTEWATER LINES AND THERE IS LESS THAN 9 FEET CLEARANCE BETWEEN LINES, THE WASTEWATER LINE SHALL BE PLACED SO THAT THE WASTEWATER PIPE SECTION IS CENTERED ON THE WATER LINE AND CONSTRUCTED IN ACCORDANCE WITH TCEQ CHAPTERS 217.53(b) AND 290.44(e).

18. PIPE MATERIAL FOR WATER MAINS SHALL BE PVC (AWWA C900-16 MIN. 235 PSI PRESSURE RATING). WATER SERVICES (2" OR LESS) SHALL BE POLYETHYLENE TUBING (BLACK, 200PSI, SDR-(9)). DUCTILE IRON PIPE (AWWA C115/C151, MIN. PRESSURE CLASS 250) MAY BE USED FOR WATER MAINS WITH THE EXPRESS APPROVAL OF CITY OF LEANDER ENGINEERING.

19. PIPE FOR PRESSURE WASTEWATER MAINS SHALL BE PVC (AWWA C900-16), GREEN AND MARKED FOR SEWER. PIPE MATERIAL FOR GRAVITY WASTEWATER MAINS SHALL BE PVC (ASTM D2241, D3034 MAX. SDR-26 OR PS115 F679) OR FIBERGLASS WITH PIPE STIFFNESS OF 72 PSI PER COA SPL WW-509.

20. ALL FIRE HYDRANT LEADS SHALL BE DUCTILE IRON PIPE (AWWA C115/C151 PRESSURE CLASS 350).

21. INTERIOR SURFACES OF ALL DUCTILE IRON POTABLE OR RECLAIMED WATER PIPE SHALL BE CEMENT-MORTAR LINED AND SEAL COATED AS REQUIRED BY AWWA C104.

22. ALL IRON PIPE AND FITTINGS SHALL BE WRAPPED WITH MINIMUM 8-MIL POLYETHYLENE.

23. THE CONTRACTOR SHALL CONTACT THE ENGINEERING DEPARTMENT INSPECTOR AT 528-2700 AT LEAST 48 HOURS PRIOR TO CONNECTING TO THE EXISTING WATER LINES.

24. ALL MANHOLES SHALL BE CONCRETE WITH CAST IRON RING AND COVER. TAPPING OF FIBERGLASS MANHOLES SHALL NOT BE ALLOWED.

25. EXISTING MANHOLES MODIFIED BY CONSTRUCTION ACTIVITY SHALL BE TESTED FOR LEAKAGE BY VACUUM. ANY EXISTING MANHOLE WHICH FAILS TO PASS THE VACUUM TEST SHALL BE CLOSELY EXAMINED BY THE INSPECTOR AND THE CONTRACTOR TO DETERMINE IF THE MANHOLE CAN BE REPAIRED. THEREAFTER, THE CONTRACTOR SHALL EITHER REPAIR OR REMOVE AND REPLACE THE MANHOLE AS DIRECTED.

26. PIPE CONNECTIONS TO EXISTING MANHOLES AND JUNCTION BOXES SHALL BE CONSTRUCTED IN ACCORDANCE WITH CITY OF AUSTIN SPECIFICATION 506.5.F.

27. LINE FLUSHING OR ANY ACTIVITY USING A LARGE QUANTITY OF WATER MUST BE COORDINATED WITH THE PUBLIC WORKS DEPARTMENT.

28. THE CONTRACTOR, AT HIS EXPENSE, SHALL PERFORM STERILIZATION OF ALL CONSTRUCTED POTABLE WATER LINES AND SHALL PROVIDE ALL EQUIPMENT (INCLUDING TEST GAUGES), SUPPLIES (INCLUDING CONCENTRATED CHLORINE DISINFECTING MATERIAL), AND NECESSARY LABOR REQUIRED FOR THE STERILIZATION PROCEDURE. THE STERILIZATION PROCEDURE SHALL BE MONITORED BY CITY OF LEANDER PERSONNEL. WATER SAMPLES WILL BE COLLECTED BY THE CITY OF LEANDER TO VERIFY EACH TREATED LINE HAS ATTAINED AN INITIAL CHLORINE CONCENTRATION OF 50 PPM. WHERE MEANS OF FLUSHING IS NECESSARY, THE CONTRACTOR, AT HIS EXPENSE, SHALL PROVIDE FLUSHING DEVICES AND REMOVE SAID DEVICES PRIOR TO FINAL ACCEPTANCE BY THE CITY OF LEANDER.

29. SAMPLING TAPS SHALL BE BROUGHT UP TO 3 FEET ABOVE GRADE AND SHALL BE EASILY ACCESSIBLE FOR CITY PERSONNEL. AT THE CONTRACTORS' REQUEST, AND IN HIS PRESENCE, SAMPLES FOR BACTERIOLOGICAL TESTING WILL BE COLLECTED BY THE CITY OF LEANDER NOT LESS THAN 24 HOURS AFTER THE TREATED LINE HAS BEEN FLUSHED OF THE CONCENTRATED CHLORINE SOLUTION AND CHARGED WITH WATER APPROVED BY THE CITY.

30. TESTING SHALL BE PERFORMED FOR ALL WASTEWATER PIPE INSTALLED AND PRESSURE PIPE HYDROSTATIC TESTING OF ALL WATER LINES CONSTRUCTED. THE OWNER'S CONTRACTOR SHALL PROVIDE ALL EQUIPMENT (INCLUDING PUMPS AND GAUGES), SUPPLIES AND LABOR NECESSARY TO PERFORM THE TESTS. THE CONTRACTOR SHALL NOTIFY THE CITY OF LEANDER ENGINEERING DEPARTMENT NO LESS THAN 48 HOURS PRIOR TO PERFORMING STERILIZATION, QUALITY TESTS, OR PRESSURE TESTS. A CITY OF LEANDER INSPECTOR SHALL BE PRESENT FOR ALL TESTS AND SHALL BE PAID FOR BY THE OWNER/CONTRACTOR. THESE SERVICES ARE PAID FOR AT THE TIME OF CONSTRUCTION PLAN SUBMITTAL.

31. THE CONTRACTOR SHALL NOT OPEN OR CLOSE ANY VALVE UNLESS AUTHORIZED BY THE CITY OF LEANDER.

32. ALL VALVE BOXES AND COVERS SHALL BE CAST IRON.

33. ALL WATER VALVE COVERS ARE TO BE PAINTED BLUE.

34. ALL WATER METER BOXES SHALL BE:

a. SINGLE, 1" METER AND BELOW DFW37F-12-1CA, OR EQUAL
b. DUAL, 1" METERS AND BELOW DFW39F-12-1CA, OR EQUAL
c. 1.5" SINGLE METER DFW65C-14-1CA, OR EQUAL
d. 2" SINGLE METER DFW1730F-12-1CA, OR EQUAL

WATER AND WASTEWATER NOTES (cont.)

35. SAND, AS DESCRIBED IN AUSTIN SPECIFICATION ITEM 510 PIPE, SHALL NOT BE USED AS BEDDING FOR WATER AND WASTEWATER LINES. ACCEPTABLE BEDDING MATERIALS ARE PIPE BEDDING STONE, PEA GRAVEL AND IN LIEU OF SAND, A NATURALLY OCCURRING OR MANUFACTURED STONE MATERIAL CONFORMING TO ASTM C33 FOR STONE QUALITY AND MEETING THE FOLLOWING GRADATION SPECIFICATION:
SIEVE SIZE PERCENT RETAINED BY WEIGHT

1/2" 0
3/8" 0-2
#4 40-85
#10 95-100

36. THE CONTRACTOR IS HEREBY NOTIFIED THAT CONNECTING TO, SHUTTING DOWN, OR TERMINATING EXISTING UTILITY LINES MAY HAVE TO OCCUR AT OFF-PEAK HOURS. SUCH HOURS ARE USUALLY OUTSIDE NORMAL WORKING HOURS AND POSSIBLY BETWEEN 12 AM AND 6 AM.

37. ALL WASTEWATER CONSTRUCTION SHALL BE IN ACCORDANCE WITH THE TEXAS COMMISSION ON ENVIRONMENTAL QUALITY (TCEQ) REGULATIONS, 30 TAC CHAPTER 213 AND 30 TAC CHAPTER 217, AS APPLICABLE. WHENEVER TCEQ AND CITY OF LEANDER SPECIFICATION CONFLICT, THE MORE STRINGENT SHALL APPLY.

38. MANHOLES SHALL BE COATED PER CITY OF AUSTIN SPL WW-511 (RAVEN 405 OR SPRAYWALL).

39. DENSITY TESTING FOR TRENCH BACKFILL LOCATED WITHIN THE LIMITS OF THE PAVED AREA IS TO BE DONE IN 12" LIFTS EVERY 500' AND AT LEAST ONCE PER LINE SEGMENT

40. ALL GRAVITY WASTEWATER MAINS TO BE TESTED BY CAMERA AND PAID FOR BY THE CONTRACTOR. CAMERA TESTING FOR WASTEWATER LINES IN ROADWAY SHALL OCCUR BEFORE PAVING. CONTRACTOR SHALL PROVIDE THE CITY WITH A DVD COPY OF THE FULL CAMERA INSPECTION.

41. RECLAIMED AND RECYCLED WATER LINE SHALL BE CONSTRUCTED OF "PURPLE PIPE." ALL RECLAIMED AND RECYCLED WATER VALVE COVERS SHALL BE SQUARE AND PAINTED PURPLE.

STREET AND DRAINAGE NOTES

1. ALL SIDEWALKS SHALL COMPLY WITH THE AMERICANS WITH DISABILITIES ACT. THE CITY OF LEANDER HAS NOT REVIEWED THESE PLANS FOR COMPLIANCE WITH THE AMERICANS WITH DISABILITIES ACT, OR ANY OTHER ACCESSIBILITY LEGISLATION, AND DOES NOT WARRANTY OR APPROVE THESE PLANS FOR ANY ACCESSIBILITY STANDARDS.

2. PRIOR TO ACCEPTANCE THE ENGINEER SHALL SUBMIT DOCUMENTATION THAT THE IMPROVEMENTS WERE INSPECTED BY TDLR OR A REGISTERED ACCESSIBLITY SPECIALIST (RAS) AND ARE IN COMPLIANCE WITH THE REQUIREMENTS OF THE TABA.

3. CONTRACTOR SHALL PROVIDE QUALITY TESTING FOR ALL INFRASTRUCTURES TO BE ACCEPTED AND MAINTAINED BY THE CITY OF LEANDER AFTER COMPLETION. THE CONTRACTOR SHALL NOTIFY THE CITY OF LEANDER ENGINEERING DEPARTMENT AT 528-2700 NO LESS THAN 48 HOURS PRIOR TO ANY TESTING.

4. BACKFILL BEHIND THE CURB SHALL BE COMPACTED TO OBTAIN A MINIMUM OF 95% MAXIMUM DENSITY TO WITHIN 6" OF TOP OF CURB. MATERIAL USED SHALL BE PRIMARILY GRANULAR WITH NO ROCKS LARGER THAN 6" IN THE GREATEST DIMENSION. THE REMAINING 6" SHALL BE CLEAN TOPSOIL FREE FROM ALL CLODS AND SUITABLE FOR SUSTAINING PLANT LIFE

5. A MINIMUM OF 6" OF TOPSOIL SHALL BE PLACED BETWEEN THE CURB AND RIGHT-OF-WAY AND IN ALL DRAINAGE CHANNELS EXCEPT CHANNELS CUT IN STABLE ROCK.

6. DEPTH OF COVER FOR ALL CROSSINGS UNDER PAVEMENT, INCLUDING GAS, ELECTRIC TELEPHONE, CABLE TV, ETC., SHALL BE A MINIMUM OF 36" BELOW SUBGRADE.

7. STREET RIGHT-OF-WAY SHALL BE GRADED AT A SLOPE OF ¼" PER FOOT TOWARD THE CURB UNLESS OTHERWISE INDICATED. HOWEVER, IN NO CASE SHALL THE WIDTH OF RIGHT-OF-WAY AT ¼" PER FOOT SLOPE BE LESS THAN 10 FEET UNLESS A SPECIFIC REQUEST FOR AN ALTERNATE GRADING SCHEME IS MADE TO AND ACCEPTED BY THE CITY OF LEANDER PUBLIC WORKS DEPARTMENT.

8. BARRICADES BUILT TO THE CITY OF LEANDER STANDARDS SHALL BE ERECTED ON ALL DEAD-END STREETS AND AS NECESSARY DURING CONSTRUCTION TO MAINTAIN JOB AND PUBLIC SAFETY.

9. ALL REINFORCED CONCRETE PIPE SHALL BE MINIMUM CLASS III OF TONGUE AND GROOVE OR O-RING JOINT DESIGN.

10. THE CONTRACTOR IS TO NOTIFY THE ENGINEERING INSPECTOR 48 HOURS PRIOR TO THE FOLLOWING TESTING: PROOF ROLLING SUB-GRADE AND EVERY LIFT OF ROADWAY EMBANKMENT, IN-PLACE DENSITY TESTING OF EVERY BASE COURSE, AND ASPHALT CORES. ALL OF THIS TESTING MUST BE WITNESSED BY A CITY OF LEANDER REPRESENTATIVE.

11. THE CONTRACTOR MUST PROVIDE A PNEUMATIC TRUCK PER TXDOT SPEC FOR PROOF ROLLING.

12. AT INTERSECTIONS WHICH HAVE VALLEY DRAINAGE, THE CROWNS OF THE INTERSECTING STREETS WILL CULMINATE IN A DISTANCE OF 40 FEET FROM INTERSECTING CURB LINE UNLESS OTHERWISE NOTED.

13. AT THE INTERSECTION OF TWO 44' STREETS OR LARGER, THE CROWNS OF THE INTERSECTING STREETS WILL CULMINATE IN A DISTANCE OF 40 FEET FROM INTERSECTING CURB LINE UNLESS OTHERWISE NOTED.

14. A CURB LAYDOWN IS REQUIRED AT ALL POINTS WHERE THE PROPOSED SIDEWALK INTERSECTS THE CURB.

15. ALL STRIPING, WITH THE EXCEPTION OF STOP BARS, CROSS WALKS, WORDS AND ARROWS, IS TO BE TYPE II (WATER BASED). STOP BARS, CROSS WALKS, WORDS AND ARROWS REQUIRE TYPE I THERMOPLASTIC.

16. MANHOLE FRAMES, COVERS, VALVES, CLEAN-OUTS, ETC. SHALL BE RAISED TO GRADE PRIOR TO FINAL PAVEMENT CONSTRUCTION.

17. CONTRACTOR SHALL NOTIFY THE LEANDER ENGINEERING DEPARTMENT AT 528-2700 AT LEAST 48 HOURS PRIOR TO THE INSTALLATION OF ANY DRAINAGE FACILITY WITHIN A DRAINAGE EASEMENT OR STREET ROW. THE METHOD OF PLACEMENT AND COMPACTION OF BACKFILL IN THE CITY'S ROW MUST BE APPROVED PRIOR TO THE START OF BACKFILL OPERATIONS.

18. A STOP BAR SHALL BE PLACED AT ALL STOP SIGN LOCATIONS.

19. A MINIMUM OF SEVEN DAYS OF CURE TIME IS REQUIRED FOR HMAC PRIOR TO THE INTRODUCTION OF PUBLIC VEHICULAR TRAFFIC TO ANY STREETS.

20. THE GEOTECHNICAL ENGINEER SHALL INSPECT THE SUBGRADE FOR COMPLIANCE WITH THE DESIGN ASSUMPTIONS MADE DURING PREPARATION OF THE SOILS REPORT. ANY ADJUSTMENTS THAT ARE REQUIRED SHALL BE MADE THROUGH REVISIONS OF THE CONSTRUCTION PLANS.

21. GEOTECHNICAL INVESTIGATION INFORMATION AND PAVEMENT RECOMMENDATIONS WERE PROVIDED BY InTEC. PAVEMENT RECOMMENDATIONS ARE AS FOLLOWS:

STREET	ROW	PAVEMENT	BASE	HMAC
THISTLE HILL DRIVE	56'	36'	10.0"	2.0"
LACKEY COVE	56'	36'	10.0"	2.0"

* GEOTECH TO VERIFY SUBGRADE AND MAKE FINAL RECOMMENDATIONS

TRENCH SAFETY NOTES

1. TRENCH SAFETY SYSTEMS TO BE UTILIZED FOR THIS PROJECT ARE DESCRIBED IN ITEM 509S "TRENCH SAFETY SYSTEMS" OF THE CITY OF AUSTIN STANDARD SPECIFICATIONS AND SHALL BE IN ACCORDANCE WITH THE LAWS OF THE STATE OF TEXAS AND THE U.S. OCCUPATION SAFETY AND HEALTH ADMINISTRATION REGULATIONS.

GRADING NOTES

1. POSITIVE DRAINAGE SHALL BE MAINTAINED ON ALL SURFACE AREAS WITHIN THE SCOPE OF THIS PROJECT. CONTRACTOR SHOULD TAKE PRECAUTIONS NOT TO ALLOW ANY PONDING OF WATER.

2. THE CONTRACTOR SHALL CONSTRUCT EARTHEN EMBANKMENTS WITH SLOPES NO STEEPER THAN 3:1 AND COMPACT SOIL TO 95% OF MAXIMUM DENSITY IN ACCORDANCE WITH THE CITY OF AUSTIN STANDARD SPECIFICATIONS.

3. AREAS OF SOIL DISTURBANCE ARE LIMITED TO GRADING AND IMPROVEMENTS SHOWN. ALL OTHER AREAS WILL NOT BE DISTURBED.

BENCHMARKS

1) IRON ROD SET APPROXIMATELY 160' (N) & 72' (E) OF THE ROAD CENTERLINE INTERSECTION OF PROPOSED N. LAKELINE BOULEVARD AND PLANO LANE ON LOT 1, 'AMENITY CENTER'.
ELEV=1046.70 Northing = 10173969.4170 Easting = 3071629.9940

2) IRON ROD SET APPROXIMATELY 249' (N) & 37' (W) OF THE ROAD CENTERLINE INTERSECTION OF PROPOSED N. LAKELINE BOULEVARD AND SONNY DRIVE ON LOT 1, 'AMENITY CENTER'.
ELEV=1039.65 Northing = 10173825.4990 Easting = 3072495.4380

3) IRON ROD SET APPROXIMATELY 96' (E) OF THE CUL-DE-SAC CENTERLINE ON LOT 45, BLOCK V.
ELEV=1026.36 Northing = 10174067.2410 Easting = 3073522.9990

(COORDINATES BASED ON NAD83, TX STATE PLANES / CENTRAL ZONE 4203, US FT)

CITY CONTACTS

ENGINEERING MAIN LINE: 512-528-2766
PLANNING DEPARTMENT: 512-528-2750
PUBLIC WORKS MAIN LINE: 512-259-2640
STORMWATER INSPECTIONS: 512-285-0055
UTILITIES MAIN LINE: 512-259-1142
UTILITIES ON-CALL: 512-690-4760

TCEQ-0592A **(REV. JULY 15, 2015)**

TEXAS COMMISSION ON ENVIRONMENTAL QUALITY
CONTRIBUTING ZONE PLAN
GENERAL CONSTRUCTION NOTES

1. A WRITTEN NOTICE OF CONSTRUCTION MUST BE SUBMITTED TO THE TCEQ REGIONAL OFFICE AT LEAST 48 HOURS PRIOR TO THE START OF ANY GROUND DISTURBANCE OR CONSTRUCTION ACTIVITIES. THIS NOTICE MUST INCLUDE:
   - THE NAME OF THE APPROVED PROJECT;
   - THE ACTIVITY START DATE; AND
   - THE CONTACT INFORMATION OF THE PRIME CONTRACTOR.
2. ALL CONTRACTORS CONDUCTING REGULATED ACTIVITIES ASSOCIATED WITH THIS PROJECT SHOULD BE PROVIDED WITH COMPLETE COPIES OF THE APPROVED CONTRIBUTING ZONE PLAN (CZP) AND THE TCEQ LETTER INDICATING THE SPECIFIC CONDITIONS OF ITS APPROVAL. DURING THE COURSE OF THESE REGULATED ACTIVITIES, THE CONTRACTOR(S) SHOULD KEEP COPIES OF THE APPROVED PLAN AND APPROVAL LETTER ON-SITE.
3. NO HAZARDOUS SUBSTANCE STORAGE TANK SHALL BE INSTALLED WITHIN 150 FEET OF A WATER SUPPLY SOURCE, DISTRIBUTION SYSTEM, WELL, OR SENSITIVE FEATURE.
4. PRIOR TO BEGINNING ANY CONSTRUCTION ACTIVITY, ALL TEMPORARY EROSION AND SEDIMENTATION (E&S) CONTROL MEASURES MUST BE PROPERLY INSTALLED AND MAINTAINED IN ACCORDANCE WITH THE MANUFACTURERS SPECIFICATIONS. IF INSPECTIONS INDICATE A CONTROL HAS BEEN USED INAPPROPRIATELY, OR INCORRECTLY, THE APPLICANT MUST REPLACE OR MODIFY THE CONTROL FOR SITE SITUATIONS. THESE CONTROLS MUST REMAIN IN PLACE UNTIL THE DISTURBED AREAS HAVE BEEN PERMANENTLY STABILIZED.
5. ANY SEDIMENT THAT ESCAPES THE CONSTRUCTION SITE MUST BE COLLECTED AND PROPERLY DISPOSED OF BEFORE THE NEXT RAIN EVENT TO ENSURE IT IS NOT WASHED INTO SURFACE STREAMS, SENSITIVE FEATURES, ETC.
6. SEDIMENT MUST BE REMOVED FROM THE SEDIMENT TRAPS OR SEDIMENTATION BASINS WHEN IT OCCUPIES 50% OF THE BASIN'S DESIGN CAPACITY.
7. LITTER, CONSTRUCTION DEBRIS, AND CONSTRUCTION CHEMICALS EXPOSED TO STORMWATER SHALL BE PREVENTED FROM BEING DISCHARGED OFFSITE.
8. ALL EXCAVATED MATERIAL THAT WILL BE STORED ON-SITE MUST HAVE PROPER E&S CONTROLS.
9. IF PORTIONS OF THE SITE WILL HAVE A CEASE IN CONSTRUCTION ACTIVITY LASTING LONGER THAN 14 DAYS, SOIL STABILIZATION IN THOSE AREAS SHALL BE INITIATED AS SOON AS POSSIBLE PRIOR TO THE 14TH DAY OF INACTIVITY. IF ACTIVITY WILL RESUME PRIOR TO THE 21ST DAY, STABILIZATION MEASURES ARE NOT REQUIRED. IF DROUGHT CONDITIONS OR INCLEMENT WEATHER PREVENT ACTION BY THE 14TH DAY, STABILIZATION MEASURES SHALL BE INITIATED AS SOON AS POSSIBLE.
10. THE FOLLOWING RECORDS SHOULD BE MAINTAINED AND MADE AVAILABLE TO THE TCEQ UPON REQUEST:
    - THE DATES WHEN MAJOR GRADING ACTIVITIES OCCUR;
    - THE DATES WHEN CONSTRUCTION ACTIVITIES TEMPORARILY OR PERMANENTLY CEASE ON A PORTION OF THE SITE; AND
    - THE DATES WHEN STABILIZATION MEASURES ARE INITIATED.
11. THE HOLDER OF ANY APPROVED CZP MUST NOTIFY THE APPROPRIATE REGIONAL OFFICE IN WRITING AND OBTAIN APPROVAL FROM THE EXECUTIVE DIRECTOR PRIOR TO INITIATING ANY OF THE FOLLOWING:
    A. ANY PHYSICAL OR OPERATIONAL MODIFICATION OF ANY BEST MANAGEMENT PRACTICES (BMPS) OR STRUCTURE(S), INCLUDING BUT NOT LIMITED TO TEMPORARY OR PERMANENT PONDS, DAMS, BERMS, SILT FENCES, AND DIVERSIONARY STRUCTURES;
    B. ANY CHANGE IN THE NATURE OR CHARACTER OF THE REGULATED ACTIVITY FROM THAT WHICH WAS ORIGINALLY APPROVED;
    C. ANY CHANGE THAT WOULD SIGNIFICANTLY IMPACT THE ABILITY TO PREVENT POLLUTION OF THE EDWARDS AQUIFER; OR
    D. ANY DEVELOPMENT OF LAND PREVIOUSLY IDENTIFIED AS UNDEVELOPED IN THE APPROVED CONTRIBUTING ZONE PLAN.

AUSTIN REGIONAL OFFICE
12100 PARK 35 CIRCLE, BUILDING A
AUSTIN, TEXAS 78753-1808
PHONE: (512) 339-2929
FAX: (512) 339-3795

SAN ANTONIO REGIONAL OFFICE
14250 JUDSON ROAD
SAN ANTONIO, TEXAS 78233-4480
PHONE: (210) 490-3096
FAX: (210) 545-4329

THESE GENERAL CONSTRUCTION NOTES MUST BE INCLUDED ON THE CONSTRUCTION PLANS PROVIDED TO THE CONTRACTOR AND ALL SUBCONTRACTORS.

FOR CITY OF LEANDER USE

20-PICP-011

DESIGNED BY: LAW
DRAFTED BY: ZHL & CMC

REVISION	DATE
INITIAL SUBMITTAL	03.24.20
UPDATE #1 SUBMITTAL	05.18.20
UPDATE #2 SUBMITTAL	07.28.20

Carlson, Brigance & Doering, Inc.
Civil Engineering ◆ Surveying
FIRM ID #F3791
Main Office
5501 West William Cannon Dr.
Austin, Texas 78749
North Office
12129 RR 620 N., Ste. 600
Austin, Texas 78750
Phone No. (512) 280-5160 Fax No. (512) 280-5165

SHEET NAME: GENERAL NOTES
JOB NAME: HOMESTEAD PHASE 3
PROJECT: STREET, DRAINAGE, WATER, AND WASTEWATER IMPROVEMENTS

8/10/2020

STATE OF TEXAS
LEE A. WHITED
102471
LICENSED PROFESSIONAL ENGINEER
CARLSON, BRIGANCE & DOERING, INC.
ID# F3791

DATE
NOVEMBER 2019

JOB NUMBER
5172

SHEET
2 OF 61

SHEET NO.
2

HOMESTEAD, PHASE 3
FINAL PLAT

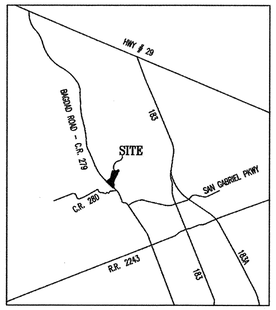

VICINITY MAP
NOT TO SCALE

INITIAL SUBMITTAL DATE: MARCH 24, 2020
DATE: JUNE 30, 2020

OWNER & DEVELOPER:
GEHAN HOMES, LTD.
3815 S. CAPITAL OF TEXAS HIGHWAY
SUITE 275
AUSTIN, TEXAS 78704
(512) 330-9366 phone
(512) 900-2934 fax

ENGINEER & SURVEYOR:
CARLSON, BRIGANCE & DOERING, INC.
5501 WEST WILLIAM CANNON DRIVE
AUSTIN, TEXAS 78749
(512) 280-5160 phone
(512) 280-5165 fax

TOTAL ACREAGE: 18.208 ACRES
SURVEY: CHARLES COCHRAN SURVEY,
ABSTRACT NO. 134

F.E.M.A. MAP NO. 48491C 0435F
WILLIAMSON COUNTY, TEXAS AND
INCORPORATED AREAS.
DATED: DECEMBER 20, 2019

TOTAL OF LOTS:	24	14.916 ACRES
NO. OF TWO FAMILY LOTS:	21	4.743 ACRES
NO. H.O.A., D.E., W.Q., P.U.E., L.S.E. & PEDESTRIAN ACCESS LOTS:	2	10.173 ACRES
BLOCKS:	1	

STREETS		
THISTLE HILL DRIVE	1,218 L.F.	1.693 ACRES
LACKEY COVE	310 L.F.	0.528 ACRES
TOTAL	1,738 L.F.	2.221 ACRES

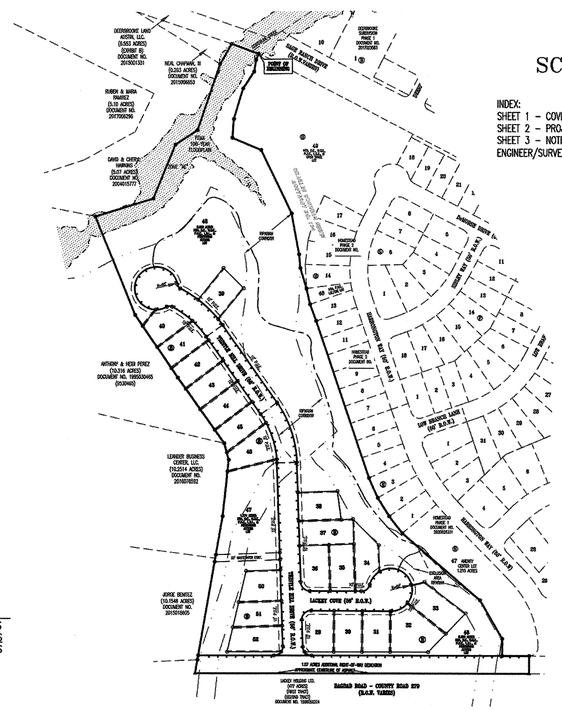

0 200' 400'

SCALE: 1" = 200'

INDEX:
SHEET 1 – COVER SHEET AND PROJECT INFORMATION
SHEET 2 – PROJECT
SHEET 3 – NOTES, LEGAL, SIGNATURE BLOCKS, AND ENGINEER/SURVEYOR CERTIFICATION

LOT SQUARE FOOTAGE LIST

BLOCK	LOT	SQ. FT.
H	29	10,062
H	30	9,115
H	31	9,080
H	32	14,753
H	33	11,709
H	34	10,274
H	35	9,135
H	36	10,325
H	37	10,644
H	38	9,085
H	39	8,860
H	40	8,552
H	41	8,931
H	42	9,129
H	43	9,122
H	44	9,103
H	45	9,183
H	46	10,717
H	47	68,545
H	48	374,599
H	50	9,351
H	51	9,004
H	52	10,490

A 2.5' PUBLIC UTILITY EASEMENT IS
ADJACENT TO ALL SIDE LOT LINES
(NOT TO SCALE)

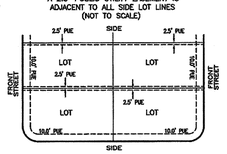

SHEET NO. 1 OF 3

Carlson, Brigance & Doering, Inc.
FIRM ID #F3791 ◆ REG. # 10024900
Civil Engineering ◆ Surveying
5501 West William Cannon ◆ Austin, Texas 78749
Phone No. (512) 280-5160 ◆ Fax No. (512) 280-5165

PATH–J: AC3D\5172\SURVEY\PLAT – HOMESTEAD PHASE 3.dwg

HOMESTEAD, PHASE 3
FINAL PLAT

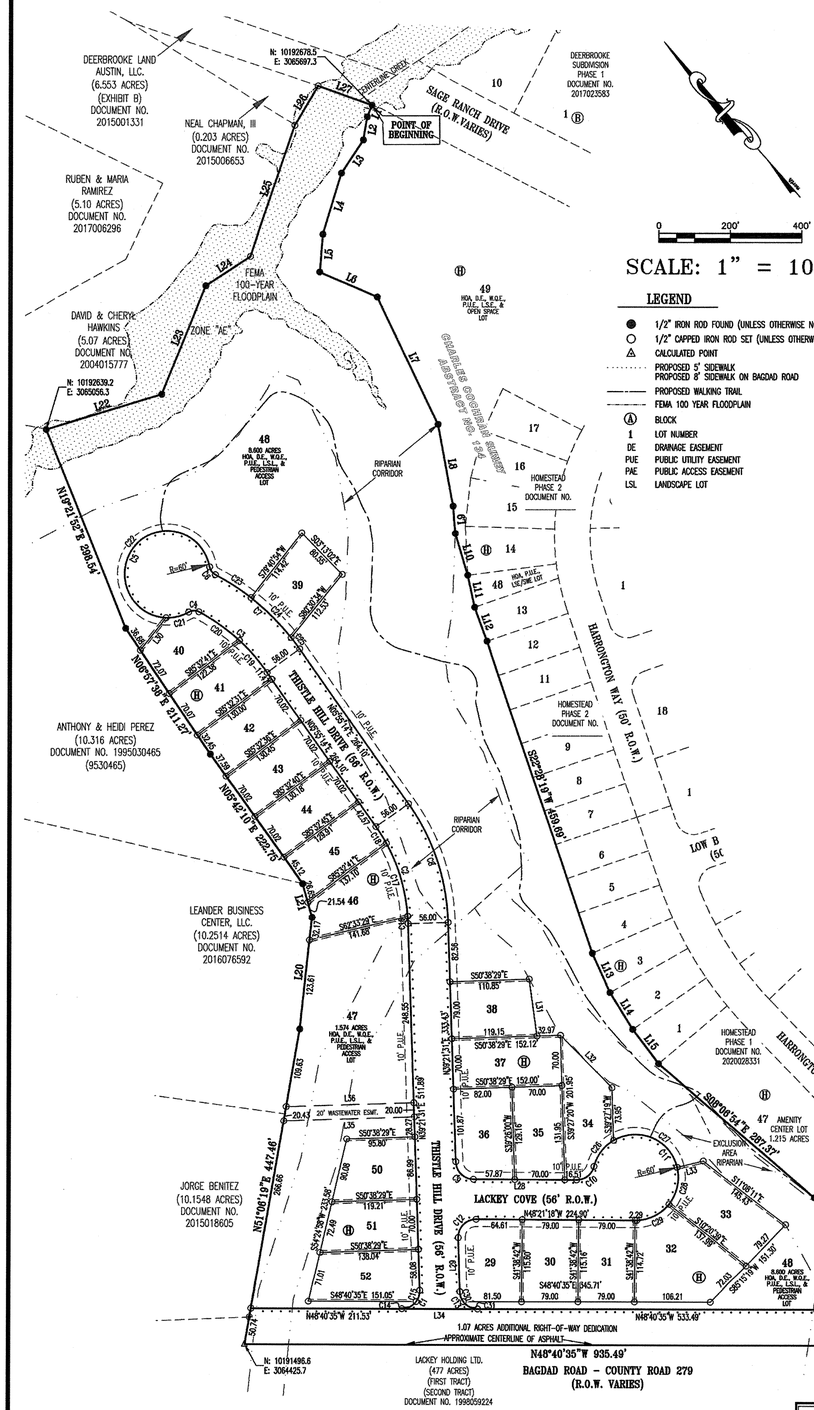

0 200' 400'

SCALE: 1" = 100'

LEGEND

- ● 1/2" IRON ROD FOUND (UNLESS OTHERWISE NOTED)
- ○ 1/2" CAPPED IRON ROD SET (UNLESS OTHERWISE NOTED)
- △ CALCULATED POINT
- PROPOSED 5' SIDEWALK
  PROPOSED 8' SIDEWALK ON BAGDAD ROAD
- PROPOSED WALKING TRAIL
- FEMA 100 YEAR FLOODPLAIN
- Ⓐ BLOCK
- 1 LOT NUMBER
- DE DRAINAGE EASEMENT
- PUE PUBLIC UTILITY EASEMENT
- PAE PUBLIC ACCESS EASEMENT
- LSL LANDSCAPE LOT

Curve Table

Curve #	Length	Radius	Chord Direction	Chord Length	Tangent	DELTA
C1	40.13	25.00	N85°20'28"E	35.98	25.87	91°57'54"
C2	144.15	247.00	N22°38'23"E	142.11	74.19	33°26'17"
C3	127.94	272.00	N07°33'14"W	126.76	65.17	26°56'57"
C4	15.07	15.00	N49°48'06"W	14.44	8.24	57°32'46"
C5	303.66	60.00	N66°24'44"E	68.85	42.03	289°56'27"
C6	13.89	15.00	N04°51'52"E	13.40	7.49	53°04'11"
C7	157.95	328.00	N07°52'30"W	156.43	80.54	27°35'28"
C8	176.83	303.00	N22°38'23"E	174.33	91.01	33°26'17"
C9	38.27	25.00	N04°29'53"W	34.64	24.02	87°42'49"
C10	33.01	25.00	N85°11'12"W	30.67	19.41	75°39'48"
C11	265.34	60.00	N02°40'13"E	96.23	80.53	253°22'38"
C12	40.27	25.00	N85°30'07"E	36.05	26.02	92°17'11"
C13	38.41	25.00	N04°39'32"W	34.74	24.16	88°02'06"
C14	23.18	25.00	S75°14'29"E	22.36	12.50	53°07'48"
C15	16.94	25.00	N58°46'34"E	16.62	8.81	38°50'08"
C16	10.39	247.00	N38°09'14"E	10.39	5.19	2°24'34"
C17	106.21	247.00	N24°37'49"E	105.40	53.94	24°36'16"
C18	27.55	247.00	N09°06'58"E	27.54	13.79	6°23'27"
C19	58.86	272.00	N00°16'43"W	58.74	29.55	12°23'55"
C20	69.08	272.00	N13°45'12"W	68.89	34.72	14°33'02"
C21	33.28	60.00	S62°41'01"E	32.86	17.08	31°46'56"
C22	270.38	60.00	S82°18'12"W	93.13	73.84	258°11'30"
C23	59.14	328.00	N16°30'18"W	59.06	29.65	10°19'52"
C24	78.91	328.00	N04°26'51"W	78.72	39.65	13°47'01"
C25	19.90	328.00	N04°10'57"E	19.90	9.95	3°28'35"
C26	46.75	60.00	S78°18'03"W	45.57	24.63	44°38'18"
C27	112.20	60.00	N25°48'23"W	96.55	81.30	107°08'49"
C28	54.34	60.00	N53°42'41"E	52.50	29.19	51°53'20"
C29	52.05	60.00	S75°29'33"E	50.43	27.79	49°42'11"
C30	15.23	25.00	S21°54'28"W	14.99	7.86	34°54'07"
C31	23.18	25.00	S22°06'35"E	22.36	12.50	53°07'59"

Line Table

Line #	Length	Direction
L1	17.60	S63°32'13"W
L2	32.81	S50°59'25"W
L3	55.92	S74°42'05"W
L4	88.75	S58°06'30"W
L5	52.55	S45°40'55"W
L6	87.45	S25°50'59"E
L7	196.74	S15°33'37"W
L8	116.98	S30°57'51"W
L9	38.26	S36°22'44"W
L10	60.47	S24°38'25"W
L11	45.11	S28°40'49"W
L12	50.02	S21°01'50"W
L13	59.79	S16°36'08"W
L14	59.85	S09°13'20"W
L15	59.85	S03°56'40"W
L16	125.57	S11°21'30"W
L17	48.18	S41°19'25"W
L18	75.78	S48°40'35"E
L19	50.00	S41°19'25"W
L20	155.78	N47°34'07"E

Line Table

Line #	Length	Direction
L21	48.19	N25°24'05"E
L22	169.25	S65°48'22"E
L23	163.08	N63°29'10"E
L24	74.58	S82°01'50"E
L25	192.59	N60°02'10"E
L26	64.05	N72°04'49"E
L27	79.88	S29°15'06"E
L28	144.38	N48°21'18"W
L29	76.01	N39°21'31"E
L30	57.60	S79°44'09"W
L31	79.43	S33°22'05"W
L32	102.79	S03°27'52"E
L33	37.71	S82°13'59"E
L34	106.06	N48°40'35"W
L35	182.98	S50°36'29"E
L36	178.82	S50°36'29"E

SHEET NO. 2 OF 3

Carlson, Brigance & Doering, Inc.
FIRM ID #F3791 ◆ REG. # 10024900
Civil Engineering ◆ Surveying
5501 West William Cannon ◆ Austin, Texas 78749
Phone No. (512) 280-5160 ◆ Fax No. (512) 280-5165

PATH–J: AC3D\5172\SURVEY\PLAT – HOMESTEAD PHASE 3.dwg

HOMESTEAD, PHASE 3
FINAL PLAT

THE STATE OF TEXAS §
COUNTY OF WILLIAMSON §

KNOW ALL MEN BY THESE PRESENTS: THAT GEHAN HOMES, LTD., ORGANIZED AND EXISTING UNDER THE LAWS OF THE STATE OF TEXAS, HAVING IT'S HOME OFFICE IN AUSTIN, TEXAS, ACTING HEREIN BY AND THROUGH TOM STEVENSON, AUSTIN DIVISION PRESIDENT, AND BEING OWNERS OF THAT CERTAIN 59.574 ACRE TRACT OF LAND, OUT OF AND A PART OF THE CHARLES COCHRAN SURVEY, ABSTRACT 134, SITUATED IN WILLIAMSON COUNTY, TEXAS, CONVEYED BY DEED OF RECORD IN DOCUMENT NO. 2019014182 OF THE OFFICIAL PUBLIC RECORDS OF WILLIAMSON COUNTY, TEXAS, DO HEREBY CERTIFY THAT THERE ARE NO LIEN HOLDERS AND DEDICATES TO THE PUBLIC FOREVER USE OF ALL ADDITIONAL ROW, STREETS, ALLEYS, EASEMENTS, PARKS, AND ALL OTHER LANDS INTENDED FOR PUBLIC DEDICATION, OR WHEN THE SUBDIVIDER HAS MADE PROVISIONS FOR PERPETUAL MAINTENANCE THEREOF, TO THE INHABITANTS OF THE SUBDIVISION AS SHOWN HEREON TO BE KNOWN AS

"HOMESTEAD, PHASE 3" SUBDIVISION.

GEHAN HOMES, LTD.

_____
TOM STEVENSON
AUSTIN DIVISION PRESIDENT

STATE OF TEXAS §
COUNTY OF WILLIAMSON §

BEFORE ME, THE UNDERSIGNED AUTHORITY, A NOTARY PUBLIC IN AND FOR WILLIAMSON COUNTY, TEXAS, ON THIS THE _____ DAY OF _____ 20___, PERSONALLY APPEARED, TOM STEVENSON, AS AUSTIN DIVISION PRESIDENT OF GEHAN HOMES, LTD., ORGANIZED AND EXISTING UNDER THE LAWS OF THE STATE OF TEXAS, ON BEHALF OF SAID GEHAN HOMES, LTD., A DULY AUTHORIZED AGENT WITH AUTHORITY TO SIGN SAID DOCUMENT, PERSONALLY KNOWN TO ME (AND PROVED TO ME ON THE BASIS OF SATISFACTORY EVIDENCE) TO BE THE PERSON WHOSE NAME IS SUBSCRIBED TO THE FOREGOING INSTRUMENT, AND ACKNOWLEDGED TO ME THAT (S)HE EXECUTED THE SAME FOR THE PURPOSES AND CONSIDERATION THEREIN EXPRESSED.

GIVEN UNDER MY HAND AND SEAL OF OFFICE, THIS THE _____ DAY OF _____, 20___, A.D.

_____
NOTARY PUBLIC, STATE OF TEXAS

PRINTED NAME:_____

MY COMMISSION EXPIRES:_____

APPROVED THIS THE ____ DAY OF _____, 20___, A.D., AT A PUBLIC MEETING OF THE PLANNING AND ZONING COMMISSION OF THE CITY OF LEANDER, TEXAS AND AUTHORIZED TO BE FILED FOR RECORD BY THE COUNTY CLERK OF WILLIAMSON COUNTY, TEXAS.

_____
REBECCA H. ROSS, CHAIR
PLANNING AND ZONING COMMISSION
CITY OF LEANDER, TEXAS

_____
ELLEN COUFAL, SECRETARY
PLANNING AND ZONING COMMISSION
CITY OF LEANDER, TEXAS

STATE OF TEXAS §
COUNTY OF WILLIAMSON §

I, LEE A. WHITED, P.E., AM AUTHORIZED UNDER THE LAWS OF TEXAS, TO PRACTICE THE PROFESSION OF ENGINEERING, AND DO HEREBY STATE THAT THIS PLAT CONFORMS WITH THE APPLICABLE ORDINANCES OF THE CITY OF LEANDER, TEXAS.

ENGINEERING BY:_____
LEE A. WHITED, P.E. NO. 102471 DATE
CARLSON, BRIGANCE & DOERING, INC.
5501 WEST WILLIAM CANNON DRIVE,
AUSTIN, TEXAS 78749

STATE OF TEXAS
LEE A. WHITED
102471
LICENSED
PROFESSIONAL ENGINEER

CARLSON, BRIGANCE & DOERING, INC.
ID# F3791

STATE OF TEXAS §
COUNTY OF WILLIAMSON §

I, AARON V. THOMASON, R.P.L.S., AM AUTHORIZED UNDER THE LAWS OF THE STATE OF TEXAS, TO PRACTICE THE PROFESSION OF LAND SURVEYING AND HEREBY STATE THAT I PREPARED THIS PLAT FROM AN ACTUAL AND ACCURATE ON-THE-GROUND SURVEY OF THE LAND AND THAT THE CORNER MONUMENTS SHOWN THEREON WERE PROPERLY PLACED UNDER MY PERSONAL SUPERVISION, IN ACCORDANCE WITH ALL CITY OF LEANDER ORDINANCE AND CODES, AND THAT ALL EXISTING EASEMENTS OF RECORD AS FOUND ON TITLE POLICY PROVIDED BY STEWART TITLE, GF# 180073452, WITH AN ISSUED DATE OF FEBRUARY 14, 2019, HAVE BEEN SHOWN OR NOTED HEREON.

SURVEYED BY:_____
AARON V. THOMASON, R.P.L.S. NO. 6214 DATE
CARLSON, BRIGANCE & DOERING, INC.
5501 WEST WILLIAM CANNON DRIVE,
AUSTIN, TEXAS 78749
aaron@cbdeng.com

STATE OF TEXAS
REGISTERED
AARON V. THOMASON
6214
PROFESSIONAL
LAND SURVEYOR

THIS FLOOD STATEMENT, AS DETERMINED BY A H.U.D.-F.I.A. FLOOD INSURANCE RATE MAP, DOES NOT IMPLY THAT THE PROPERTY OR THE IMPROVEMENTS THEREON WILL BE FREE FROM FLOODING OR FLOOD DAMAGE. ON RARE OCCASIONS, GREATER FLOODS CAN AND WILL OCCUR, AND FLOOD HEIGHTS MAY INCREASE BY MAN-MADE OR NATURAL CAUSES.

THIS STATEMENT SHALL NOT CREATE LIABILITY ON THE PART OF ENGINEER OR SURVEYOR.

NOTES:

1. THIS SUBDIVISION IS CONTAINED WITHIN THE CURRENT CORPORATE LIMITS OF THE CITY OF LEANDER, TEXAS.
2. NO LOT IN THIS SUBDIVISION SHALL BE OCCUPIED UNTIL CONNECTED TO THE CITY OF LEANDER WATER DISTRIBUTION AND WASTEWATER COLLECTION FACILITIES.
3. A BUILDING PERMIT IS REQUIRED FROM THE CITY OF LEANDER PRIOR TO CONSTRUCTION OF ANY BUILDING OR SITE IMPROVEMENTS ON ANY LOT IN THIS SUBDIVISION.
4. NO BUILDINGS, FENCES, LANDSCAPING OR OTHER STRUCTURES ARE PERMITTED WITHIN DRAINAGE EASEMENTS SHOWN, EXCEPT AS APPROVED BY THE CITY OF LEANDER, TEXAS PUBLIC WORKS DEPARTMENT.
5. PROPERTY OWNER SHALL PROVIDE ACCESS TO DRAINAGE EASEMENTS AS MAY BE NECESSARY AND SHALL NOT PROHIBIT ACCESS BY THE CITY OF LEANDER.
6. ALL EASEMENTS ON PRIVATE PROPERTY SHALL BE MAINTAINED BY THE PROPERTY OWNER OR HIS OR HER ASSIGNS.
7. IN ADDITION TO THE EASEMENT SHOWN HEREON, A TEN (10') FOOT WIDE PUBLIC UTILITY EASEMENT IS DEDICATED ALONG AND ADJACENT TO ALL RIGHT-OF-WAY AND A TWO AND A HALF (2.5') FOOT WIDE PUBLIC UTILITY EASEMENT IS DEDICATED ALONG ALL SIDE LOT LINES.
8. A PORTION OF THIS TRACT IS LOCATED WITHIN A FLOOD HAZARD AREA AS SHOWN ON THE FLOOD INSURANCE RATE MAP PANEL # 48491C 0435E, FOR WILLIAMSON COUNTY, EFFECTIVE SEPTEMBER 26, 2008.
9. BUILDING SETBACKS NOT SHOWN HEREON SHALL COMPLY WITH THE MOST CURRENT ZONING ORDINANCE OF THE CITY OF LEANDER, TEXAS. ADDITIONAL RESIDENTIAL GARAGE SETBACKS MAY BE REQUIRED AS LISTED IN THE CURRENT ZONING ORDINANCE.
10. SIDEWALKS SHALL BE INSTALLED ON BOTH SIDES OF THISTLE HILL DRIVE, LACKEY COVE, AND THE SUBDIVISION SIDE OF BAGDAD ROAD. THOSE SIDEWALKS NOT ABUTTING RESIDENTIAL, COMMERCIAL OR INDUSTRIAL LOT (INCLUDING SIDEWALKS ALONG STREET FRONTAGES OF LOTS PROPOSED FOR SCHOOLS, CHURCHES, PARK LOTS, DETENTION LOTS, DRAINAGE LOTS, LANDSCAPE LOTS, OR SIMILAR LOTS), SIDEWALKS ON ARTERIAL STREETS TO WHICH ACCESS IS PROHIBITED, SIDEWALKS ON DOUBLE FRONTAGE LOTS ON THE SIDE TO WHICH ACCESS IS PROHIBITED, AND ALL SIDEWALKS ON SAFE SCHOOL ROUTES SHALL BE INSTALLED WHEN THE ADJOINING STREET IS CONSTRUCTED.
11. ALL UTILITY LINES MUST BE LOCATED UNDERGROUND.
12. NO DRIVEWAY SHALL BE CONSTRUCTED CLOSER THAN 50' OR 60% OF PARCEL FRONTAGE, WHICHEVER IS LESS, TO THE ROW OF AN INTERSECTING LOCAL OR COLLECTOR STREET OR 100' OR 60% OF PARCEL FRONTAGE, WHICHEVER IS LESS, TO THE ROW OF AN INTERSECTING ARTERIAL STREET.
13. THE HOMEOWNERS ASSOCIATION WILL OWN AND MAINTAIN THE FOLLOWING LOTS: 47 & 48, BLOCK H, LOT 4, BLOCK I.
14. THE HOMEOWNERS ASSOCIATION IS REQUIRED TO MOW AND MAINTAIN LANDSCAPING IN THE OPEN CHANNELS, DETENTION AND WATER QUALITY AREAS.
15. FOR EVERY SIX HUNDRED (600) SQUARE FEET OF AREA IN THE LANDSCAPE LOT 4, BLOCK I, LOT 47 AND 48, BLOCK H, TWO (2) SHADE TREES (TWO-INCH CALIPER OR LARGER) AND FOUR (4) SHRUBS (FIVE GALLON CONTAINER SIZE OR LARGER) SHALL BE PLANTED AND MAINTAINED. TWO ORNAMENTAL TREES PER SHADE TREE MAY BE SUBSTITUTED FOR UP TO FIFTY PERCENT OF THE SHADE TREES IF DESIRED. A SIX-FOOT PRIVACY FENCE, BUT NO HIGHER THAN THREE FEET WITHIN TWENTY FIVE FEET OF AN INTERSECTING STREET, SHALL BE CONSTRUCTED WITH THE SUBDIVISION IMPROVEMENTS AT THE COMMON LOT LINE BETWEEN THE LANDSCAPE LOT AND THE SINGLE-FAMILY OR TWO-FAMILY LOTS. THE FENCE IS REQUIRED TO BE CONSTRUCTED OF ONE OR MORE OF THE FOLLOWING MATERIALS: BRICK, STONE, CAST STONE, STUCCO, FACTORY TINTED (NOT PAINTED) SPLIT-FACED CONCRETE MASONRY UNIT, OR OTHER SIMILAR MATERIAL APPROVED BY THE DIRECTOR OF PLANNING. IN ADDITION TO THE MATERIALS LISTED ABOVE, TEXTURED PRE-CAST CONCRETE (E.G. WOODCRETE) IS ALSO PERMITTED WHEN THE PRIVACY FENCE IS ADJACENT TO COLLECTORS. ALL COLUMNS ARE REQUIRED TO HAVE CONCRETE FOOTINGS.
16. THE CITY OF LEANDER ACCEPTS AND MAINTAINS DRAINAGE AND WATER QUALITY IMPROVEMENTS CONTAINED IN OPEN CHANNELS, DETENTION AND WATER QUALITY AREAS.
17. THIS PLAT CONFORMS TO THE PRELIMINARY PLAT APPROVED BY THE PLANNING AND ZONING COMMISSION ON FEBRUARY 14, 2019
18. APPROVAL OF THIS PLAT DOES NOT CONSTITUTE THE APPROVAL OF VARIANCES OR WAIVERS TO ORDINANCE REQUIREMENTS.
19. THE HOA BYLAWS ARE RECORDED IN THE OFFICIAL PUBLIC RECORDS OF WILLIAMSON COUNTY, TEXAS UNDER DOCUMENT NUMBER

FIELD NOTES

BEING ALL OF THAT CERTAIN 18.208 ACRE TRACT OR PARCEL OF LAND OUT OF AND A PART OF THE CHARLES COCHRAN SURVEY, ABSTRACT NUMBER 134, SITUATED IN WILLIAMSON COUNTY, TEXAS, SAID TRACT OF LAND BEING MORE PARTICULARLY DESCRIBED AS BEING A PORTION OF A CALLED 59.574 ACRE TRACT OF LAND CONVEYED TO GEHAN HOMES, LTD. IN DOCUMENT NUMBER 2019014182, OFFICIAL PUBLIC RECORDS, WILLIAMSON COUNTY, TEXAS, SAID 18.208 ACRE TRACT OF LAND BEING MORE FULLY DESCRIBED BY METES AND BOUNDS AS FOLLOWS:

BEGINNING, AT A ½" IRON ROD FOUND BEING IN THE EAST LINE OF SAID 59.574 ACRE TRACT, SAME BEING IN THE WEST RIGHT-OF-WAY LINE OF SAGE RANCH DRIVE (R.O.W. VARIES), SAME BEING AT THE NORTHERNMOST CORNER OF LOT 49, BLOCK H, HOMESTEAD, PHASE 2, A SUBDIVISION RECORDED IN DOCUMENT NUMBER _____ OF THE OFFICIAL PUBLIC RECORDS OF WILLIAMSON COUNTY, TEXAS, FOR THE POINT OF BEGINNING OF THE HEREIN DESCRIBED TRACT OF LAND,

THENCE, OVER AND ACROSS SAID 59.574 ACRE TRACT, AND WITH THE WESTERN BOUNDARY LINE OF SAID HOMESTEAD PHASE 2 AND HOMESTEAD PHASE 1, A SUBDIVISION RECORDED IN DOCUMENT NUMBER 2020028331 OF THE OFFICIAL PUBLIC RECORDS OF WILLIAMSON COUNTY, TEXAS, THE FOLLOWING TWENTY-ONE (21) COURSES AND DISTANCES, NUMBERED 1 THROUGH 21,

1. S63°32'13"W, A DISTANCE OF 17.60 FEET TO A CAPPED ½" IRON ROD SET STAMPED "CBD SETSTONE",
2. S50°59'25"W, A DISTANCE OF 32.81 FEET TO A CAPPED ½" IRON ROD SET STAMPED "CBD SETSTONE",
3. S74°42'05"W, A DISTANCE OF 55.92 FEET TO A CAPPED ½" IRON ROD SET STAMPED "CBD SETSTONE",
4. S58°08'30"W, A DISTANCE OF 88.75 FEET TO A CAPPED ½" IRON ROD SET STAMPED "CBD SETSTONE",
5. S45°40'55"W, A DISTANCE OF 52.55 FEET TO A CAPPED ½" IRON ROD SET STAMPED "CBD SETSTONE",
6. S25°50'59"E, A DISTANCE OF 87.45 FEET TO A CAPPED ½" IRON ROD SET STAMPED "CBD SETSTONE",
7. S15°33'37"W, A DISTANCE OF 196.74 FEET TO A CAPPED ½" IRON ROD SET STAMPED "CBD SETSTONE",
8. S30°57'51"W, A DISTANCE OF 116.98 FEET TO A CAPPED ½" IRON ROD SET STAMPED "CBD SETSTONE",
9. S36°22'44"W, A DISTANCE OF 38.26 FEET TO A CAPPED ½" IRON ROD SET STAMPED "CBD SETSTONE",
10. S24°38'25"W, A DISTANCE OF 60.47 FEET TO A CAPPED ½" IRON ROD SET STAMPED "CBD SETSTONE",
11. S28°40'49"W, A DISTANCE OF 45.11 FEET TO A CAPPED ½" IRON ROD SET STAMPED "CBD SETSTONE",
12. S21°01'50"W, A DISTANCE OF 50.02 FEET TO A CAPPED ½" IRON ROD SET STAMPED "CBD SETSTONE",
13. S22°28'19"W, A DISTANCE OF 459.69 FEET TO A CAPPED ½" IRON ROD FOUND STAMPED "CBD SETSTONE",
14. S16°36'08"W, A DISTANCE OF 59.79 FEET TO A CAPPED ½" IRON ROD FOUND STAMPED "CBD SETSTONE",
15. S09°13'20"W, A DISTANCE OF 59.85 FEET TO A CAPPED ½" IRON ROD FOUND STAMPED "CBD SETSTONE",
16. S03°56'40"W, A DISTANCE OF 59.85 FEET TO A CAPPED ½" IRON ROD FOUND STAMPED "CBD SETSTONE",
17. S08°06'54"E, A DISTANCE OF 287.37 FEET TO A CAPPED ½" IRON ROD FOUND STAMPED "CBD SETSTONE",
18. S11°21'30"W, A DISTANCE OF 125.57 FEET TO A CAPPED ½" IRON ROD FOUND STAMPED "CBD SETSTONE",
19. S41°19'25"W, A DISTANCE OF 48.18 FEET TO A CAPPED ½" IRON ROD FOUND STAMPED "CBD SETSTONE",
20. S48°40'35"E, A DISTANCE OF 75.78 FEET TO A CAPPED ½" IRON ROD FOUND STAMPED "CBD SETSTONE", AND
21. S41°19'25"W, A DISTANCE OF 50.00 FEET TO A CALCULATED POINT, BEING A POINT ON A SOUTHWESTERN BOUNDARY LINE OF SAID 59.574 ACRE TRACT, BEING ALSO THE APPROXIMATE CENTERLINE OF SAID BAGDAD ROAD (R.O.W. VARIES), ALSO KNOWN AS COUNTY ROAD 279, FOR THE SOUTHERNMOST CORNER OF THE HEREIN DESCRIBED TRACT,

THENCE, WITH THE APPROXIMATE CENTERLINE OF SAID BAGDAD ROAD, AND WITH THE SOUTHWEST LINE OF SAID 59.574 ACRE TRACT, N48°40'35"W, A DISTANCE OF 935.49 FEET TO A CALCULATED POINT, BEING THE WESTERNMOST CORNER OF SAID 59.574 ACRE TRACT, AND BEING ALSO A POINT ON THE APPROXIMATE CENTERLINE OF SAID BAGDAD ROAD, FOR THE WESTERNMOST CORER OF THE HEREIN DESCRIBED TRACT,

THENCE, WITH THE COMMON BOUNDARY LINE OF SAID 59.574 ACRE TRACT, A CALLED 10.1548 ACRE TRACT OF LAND CONVEYED TO JORGE BENITEZ IN DOCUMENT NUMBER 2015018605 OF THE OFFICIAL PUBLIC RECORDS OF WILLIAMSON COUNTY, TEXAS, AND A CALLED 10.2514 ACRE TRACT OF LAND CONVEYED TO LEANDER BUSINESS CENTER, LLC., IN DOCUMENT NUMBER 2016076592 OF THE OFFICIAL PUBLIC RECORDS OF WILLIAMSON COUNTY, TEXAS , THE FOLLOWING THREE (3) COURSES AND DISTANCES, NUMBERED 1 THROUGH 3,

1. N51°06'19"E, A DISTANCE OF 447.46 FEET TO A ½" IRON ROD FOUND,
2. N47°34'07"E, A DISTANCE OF 155.78 FEET TO A ½" IRON ROD FOUND, AND
3. N25°24'05"E, A DISTANCE OF 48.19 FEET TO A ¾" IRON ROD FOUND, BEING A NORTHWESTERN CORNER OF SAID 59.574 ACRE TRACT, SAME BEING AN EASTERN CORNER OF SAID 10.2514 ACRE TRACT, AND BEING ALSO A SOUTHERN CORNER OF A CALLED 10.316 ACRE TRACT OF LAND CONVEYED TO ANTHONY & HEIDI PEREZ IN DOCUMENT NUMBER 1995030465 OF THE OFFICIAL PUBLIC RECORDS OF WILLIAMSON COUNTY, TEXAS,

THENCE, WITH THE COMMON BOUNDARY LINE OF SAID 59.574 ACRE TRACT AND SAID 10.316 ACRE TRACT THE FOLLOWING THREE (3) COURSES AND DISTANCES, NUMBERED 1 THROUGH 3,

1. N05°42'10"E, A DISTANCE OF 222.75 FEET TO A ¾" IRON ROD FOUND,
2. N06°57'38"E, A DISTANCE OF 211.27 FEET TO A ¾" IRON ROD FOUND, AND
3. N19°21'52"E, A DISTANCE OF 298.54 FEET TO A ½" IRON ROD FOUND, BEING A NORTHERN CORNER OF SAID 59.574 ACRE TRACT, SAME BEING AN EASTERN CORNER OF SAID 10.316 ACRE TRACT, AND BEING ALSO A SOUTHWESTERN CORNER OF A CALLED 5.07 ACRE TRACT OF LAND CONVEYED TO DAVID & CHERYL HAWKINS IN DOCUMENT NUMBER 2004015777 OF THE OFFICIAL PUBLIC RECORDS OF WILLIAMSON COUNTY, TEXAS,

THENCE, WITH THE COMMON BOUNDARY LINE OF SAID 59.574 ACRE TRACT AND SAID 5.07 ACRE TRACT, THE FOLLOWING FOUR (4) COURSES AND DISTANCES, NUMBERED 1 THROUGH 4,

1. S65°48'22"E, A DISTANCE OF 169.25 FEET TO A ¾" IRON ROD FOUND,
2. N63°29'10"E, A DISTANCE OF 163.08 FEET TO A ¾" IRON ROD FOUND,
3. S82°01'50"E, A DISTANCE OF 74.58 FEET TO A ½" IRON ROD SET STAMPED "CBD SETSTONE", AND
4. N60°02'10"E, A DISTANCE OF 192.59 FEET TO A ½" IRON ROD SET STAMPED "CBD SETSTONE", BEING A NORTHERN CORNER OF SAID 59.574 ACRE TRACT, SAME BEING A SOUTHEASTERN CORNER OF SAID 5.07 ACRE TRACT, AND BEING ALSO A SOUTHWESTERN CORNER OF A CALLED 0.203 ACRE TRACT OF LAND CONVEYED TO NEAL CHAPMAN, III IN DOCUMENT NUMBER 2015006653 OF THE OFFICIAL PUBLIC RECORDS OF WILLIAMSON COUNTY, TEXAS,

THENCE, WITH THE COMMON BOUNDARY LINE OF SAID 59.574 ACRE TRACT AND SAID 0.203 ACRE TRACT, N72°04'49"E, A DISTANCE OF 64.05 FEET TO A CAPPED ½" IRON ROD SET STAMPED "CBD SETSTONE", BEING THE NORTHERNMOST CORNER OF SAID 59.574 ACRE TRACT, SAME BEING THE EASTERNMOST CORNER OF SAID 0.203 ACRE TRACT, AND BEING ALSO A POINT ON A WESTERN BOUNDARY LINE OF A CALLED 6.553 ACRE TRACT OF LAND CONVEYED TO DEERBROOKE LAND AUSTIN, LLC., IN DOCUMENT NUMBER 2015001331 OF THE OFFICIAL PUBLIC RECORDS OF WILLIAMSON COUNTY, TEXAS, FOR THE NORTHERNMOST CORNER OF THE HEREIN DESCRIBED TRACT,

THENCE, WITH THE COMMON BOUNDARY LINE OF SAID 59.574 ACRE TRACT, SAID 6.553 ACRE TRACT, AND SAID WESTERN RIGHT-OF-WAY LINE OF SAID SAGE RANCH DRIVE, S29°15'06"E, A DISTANCE OF 79.88 FEET TO THE POINT OF BEGINNING AND CONTAINING 18.208 ACRES OF LAND.

STATE OF TEXAS §
COUNTY OF WILLIAMSON §

KNOW ALL MEN BY THESE PRESENTS: I, NANCY E. RISTER, CLERK OF THE COUNTY COURT OF SAID COUNTY, DO HEREBY CERTIFY THAT THE FOREGOING INSTRUMENT IN WRITING, WITH ITS CERTIFICATE OF AUTHENTICATION WAS FILED FOR RECORD IN MY OFFICE,

ON THIS THE _____ DAY OF _____, 20__, A.D., AT _____ O'CLOCK __ M., AND DULY RECORDED THIS THE _____ DAY OF _____, 20__, A.D., AT _____ O'CLOCK __ M., IN THE PLAT RECORDS, OF SAID COURT IN

DOCUMENT NO. _____ .

WITNESS MY HAND AND SEAL OF THE COUNTY COURT OF SAID COUNTY, AT MY OFFICE IN GEORGETOWN, TEXAS, THE LAST DATE SHOWN ABOVE WRITTEN.

_____
BY DEPUTY
NANCY E. RISTER, CLERK
COUNTY COURT, WILLIAMSON COUNTY, TEXAS

SHEET NO. 3 OF 3

Carlson, Brigance & Doering, Inc.
FIRM ID #F3791 ◆ REG. # 10024900
Civil Engineering ◆ Surveying
5501 West William Cannon ◆ Austin, Texas 78749
Phone No. (512) 280-5160 ◆ Fax No. (512) 280-5165

PATH-J:AC3D\5172\SURVEY\PLAT - HOMESTEAD PHASE 3.dwg

SCALE: 1" = 100'

0 50 100 200

SCALE: 1" = 100'

LEGEND

□	CONCRETE MONUMENT SET
⊙	IRON PIPE FOUND
◆	IRON ROD FOUND
○	IRON ROD SET
WL ESMT.	WATER LINE EASEMENT
WW ESMT.	WASTEWATER EASEMENT
P.U.E.	PUBLIC UTILITY EASEMENT
L.S.E.	LANDSCAPE LOT
D.E.	DRAINAGE EASEMENT
S.W.E.	SIDEWALK LOT
17	LOT NUMBER
Ⓐ	BLOCK NUMBER
1	ADJOINER OWNERSHIP (SEE SHEET 2 FOR LIST)
— — —	EASEMENT LINE
· · · · ·	SIDEWALK LOCATION (8' ON BAGDAD (CR 279)) (5' ALL RESIDENTIAL STREETS)
— · — · —	100-YR FULLY DEVELOPED FLOODPLAIN
— — —	RIPARIAN CORRIDOR

FLOOD PLAIN NOTE:

A PORTION OF THIS TRACT IS WITHIN THE DESIGNATED FLOOD HAZARD AREA AS SHOWN ON THE FEDERAL EMERGENCY MANAGEMENT AGENCY (FEMA) FLOOD INSURANCE RATE MAP # 48491C0435E WILLIAMSON COUNTY, TEXAS DATED SEPTEMBER 26, 2008.

STREET STANDARDS CHART

STREET NAME	R.O.W. WIDTH	STREET LENGTH
McKINNEY DRIVE	56'	536 LF
HONAKER WAY	56'	385 LF
MONTALVO TRAIL	56'	691 LF
CALVERT DRIVE	56'	702 LF
LAKEY COVE	56'	310 LF
THISTLE HILL DRIVE	56'	1,174 LF
McCLENDON TRAIL	50'	663 LF
BEARD PASS	50'	623 LF
HARRONGTON WAY	50'	1,515 LF
ALSBURY BEND	50'	818 LF
SIBLEY WAY	50'	440 LF
DeMORSE DRIVE	50'	580 LF
FENTON PASS	50'	210 LF
STULTUS WAY	50'	152 LF
TOTAL LINEAR FEET		8,819 LF

FOR CITY OF LEANDER USE

1/30/19

STATE OF TEXAS
CHARLES R. BRIGANCE JR.
64346
LICENSED PROFESSIONAL ENGINEER

CARLSON, BRIGANCE & DOERING, INC.
ID# F3791

Carlson, Brigance & Doering, Inc.
Civil Engineering
5501 West William Cannon
Austin, Texas 78749
Phone No. (512) 280-5160
Surveying
Austin, Texas 78749
Fax No. (512) 280-5165
FIRM ID #F3791

PRELIMINARY PLAT 100 SCALE

DATE OCTOBER 2018

DRAFTED BY: JSL

SHEET

DESIGNED BY: CRB

JOB NAME HOMESTEAD

PROJECT STREET, DRAINAGE, WATER & WASTEWATER IMPROVEMENTS

JOB NUMBER 4980

SHEET 5 OF 50

FILE PATH:J:\ACSD\4980\dwg\4980-Preliminary Plan.dwg - Jan 30, 2019 - 1:53pm

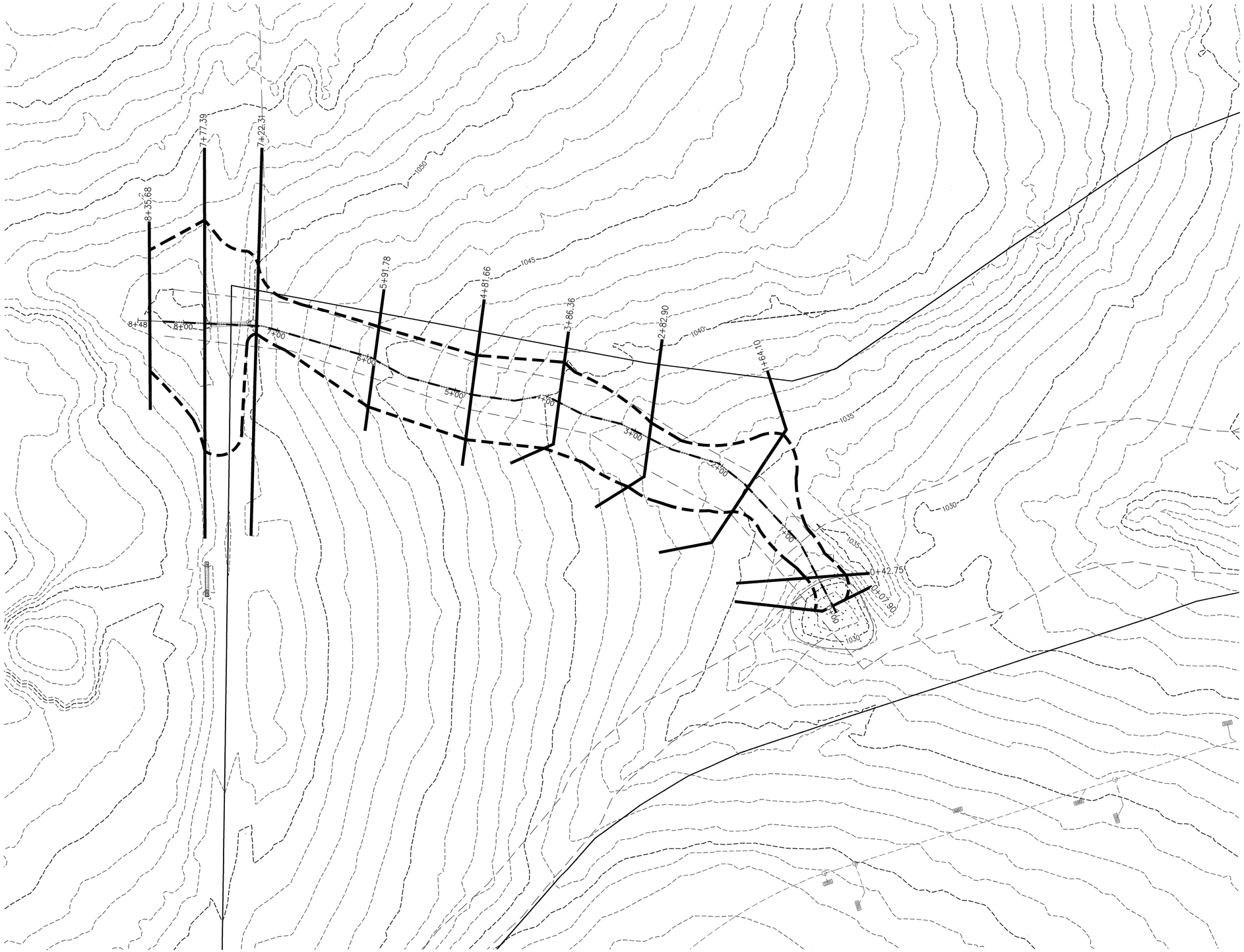

LEGEND

- CREEK CENTERLINE
- 1' CONTOUR
- 800 — 5' CONTOUR
- PROPERTY BOUNDARY
- FLOODPLAIN CROSS SECTION
- 100 YR–FLOODPLAIN
- RIPARIAN CORRIDOR

0 25 50 100
SCALE: 1" = 50'

FOR CITY OF LEANDER USE

20–PICP–011

DESIGNED BY:	DRAFTED BY:
LAW	ZHL & CMC

REVISION	DATE
INITIAL SUBMITTAL	03.24.20
UPDATE #1 SUBMITTAL	05.18.20
UPDATE #2 SUBMITTAL	07.28.20

Carlson, Brigance & Doering, Inc.
Civil Engineering ◆ Surveying
FIRM ID #F3791
Main Office: 3501 West William Cannon Dr. Austin, Texas 78749 Phone No. (512) 280-5160
North Office: 12129 RR 620 N., Ste. 600 Austin, Texas 78750 Fax No. (512) 280-5165

SHEET NAME: EXISTING FLOODPLAIN

JOB NAME: HOMESTEAD PHASE 3

PROJECT: STREET, DRAINAGE, WATER, AND WASTEWATER IMPROVEMENTS

8/10/2020

STATE OF TEXAS
LEE A. WHITED
102471
PROFESSIONAL ENGINEER
CARLSON, BRIGANCE & DOERING, INC.
ID# F3791

DATE	NOVEMBER 2019
JOB NUMBER	5172
SHEET	6 OF 61
SHEET NO.	

FILE PATH: J:\ACSD\5172\dwg\5172-EXISTING Floodplain.dwg - Aug 10, 2020 - 4:39pm

LEGEND

- CREEK CENTERLINE
- 1' CONTOUR
- 800 — 5' CONTOUR
- PROPERTY BOUNDARY
- FLOODPLAIN CROSS SECTION
- ULT. 1% (100 YR) FLOODPLAIN
- RIPARIAN CORRIDOR

0 25 50 100
SCALE: 1" = 50'

FOR CITY OF LEANDER USE

20-PICP-011

DESIGNED BY:	DRAFTED BY:
LAW	ZHL & CMC

REVISION	DATE
INITIAL SUBMITTAL	03.24.20
UPDATE #1 SUBMITTAL	05.18.20
UPDATE #2 SUBMITTAL	07.28.20

Carlson, Brigance & Doering, Inc.
Civil Engineering ◆ Surveying
FIRM ID #F3791
Main Office
5501 West William Cannon Dr.
Austin, Texas 78749
Phone No. (512) 280-5160
North Office
12129 RR 620 N. Ste. 600
Austin, Texas 78750
Fax No. (512) 280-5165

SHEET NAME: PROPOSED FLOODPLAIN

JOB NAME: HOMESTEAD PHASE 3

PROJECT: STREET, DRAINAGE, WATER, AND WASTEWATER IMPROVEMENTS

8/10/2020

STATE OF TEXAS
LEE A. WHITED
102471
LICENSED PROFESSIONAL ENGINEER
CARLSON, BRIGANCE & DOERING, INC.
ID# F3791

DATE	NOVEMBER 2019
JOB NUMBER	5172
SHEET	7 OF 61
SHEET NO.	

FILE PATH:J:\ACD\5172\dwg\5172-PROPOSED Floodplain.dwg - Aug 10, 2020 - 4:31pm

OCE-ENGINEERING.CTB

NOTE:
THE CITY OF LEANDER ENVIRONMENTAL INSPECTOR HAS THE AUTHORITY TO ADD OR MODIFY EROSION/SEDIMENT CONTROLS ON SITE THROUGHOUT THE DURATION OF THE PROJECT

FOR CITY OF LEANDER USE

20-PICP-011

DESIGNED BY:	DRAFTED BY:
LAW	ZHL & CMC

REVISION	DATE
INITIAL SUBMITTAL	03.24.20
UPDATE #1 SUBMITTAL	05.18.20
UPDATE #2 SUBMITTAL	07.28.20

Carlson, Brigance & Doering, Inc.
Civil Engineering ◆ Surveying
FIRM ID #F3791
Main Office: 5501 West William Cannon Dr. Austin, Texas 78749
North Office: 12129 RR 620 N. Ste. 600 Austin, Texas 78750
Phone No. (512) 280-5160 Fax No. (512) 280-5165

SHEET NAME: EROSION CONTROL PLAN

JOB NAME: HOMESTEAD PHASE 3

PROJECT: STREET, DRAINAGE, WATER, AND WASTEWATER IMPROVEMENTS

8/10/2020

STATE OF TEXAS
LEE A. WHITED
102471
LICENSED PROFESSIONAL ENGINEER
CARLSON, BRIGANCE & DOERING, INC.
ID# F3791

DATE	NOVEMBER 2019
JOB NUMBER	5172
SHEET	8 OF 61
SHEET NO.	8

FILE PATH:J:\AC3D\5172\dwg\5172-EROSION.dwg - Aug 10, 2020 - 4:20pm

LEGEND

H HERITAGE TREE

[*] TREES TO BE REMOVED

TREE LIST

	TREE NO.	TREE TYPE	CALIPER INCH	REMOVED	PROTECTED	HERITAGE	REASON FOR REMOVAL
	10083	LO BB	17.5		17.5		
	10084	LO	15.0		15.0		
	10085	LO	10.0		10.0		
H	10086	LO	26.0		26.0	Y	
	10087	CEDAR ELM	11.0		11.0		
	10088	LO	9.0		9.0		
	10089	LO BB	14.0		14.0		
	10090	LO	17.0		17.0		
	10091	LO	9.0		9.0		
	10092	LO	11.0		11.0		
	10096	LO	9.0		9.0		
	10097	LO MB	19.0		19.0		
	10098	LO	18.0		18.0		
	10099	CEDAR ELM	9.0		9.0		
	10100	LO	19.0		19.0		
	10101	LO BB	12.5		12.5		
	10102	LO	8.0		8.0		
	10103	PO	13.0		13.0		
	10104	CEDAR ELM	10.0		10.0		
	10105	LO	10.0		10.0		
	10106	SO	11.0		11.0		
	10107	CEDAR ELM	8.0		8.0		
	10108	LO	9.0		9.0		
	10109	LO	12.0		12.0		
	10110	CEDAR ELM	14.0		14.0		
	10111	SO	8.0		8.0		
	10112	LO BB	24.0		24.0		
	10113	CEDAR ELM	11.0		11.0		

TREE LIST

	TREE NO.	TREE TYPE	CALIPER INCH	REMOVED	PROTECTED	HERITAGE	REASON FOR REMOVAL
	10114	CEDAR ELM	14.0		14.0		
	10115	CEDAR ELM BB	13.5		13.5		
	10116	CEDAR ELM	10.0		10.0		
	10117	PO	9.0		9.0		
	10118	CEDAR ELM	10.0		10.0		
	10119	CEDAR ELM	10.0		10.0		
	10120	CEDAR ELM	10.0		10.0		
	10121	CEDAR ELM BB	14.5		14.5		
	10122	CEDAR ELM	8.0		8.0		
	10123	CEDAR ELM	8.0		8.0		
	10136	LO	15.0		15.0		
	10137	LO	10.0		10.0		
	10138	LO	8.0		8.0		
	10139	LO	10.0		10.0		
	10140	LO	11.0		11.0		
H	10141	LO BB	27.0		27.0	Y	
	10142	LO	10.0		10.0		
	10143	LO	11.0		11.0		
	10144	LO	12.0		12.0		
	10145	LO	12.0		12.0		
	10146	LO	8.0		8.0		
	10147	LO	11.0		11.0		
	10148	LO BB	11.0		11.0		
	10149	LO	11.0		11.0		
	10150	LO BB	13.5		13.5		
	10151	LO	9.0		9.0		
	10152	LO BB	13.5		13.5		
	10153	LO BB	11.0		11.0		

TREE LIST

	TREE NO.	TREE TYPE	CALIPER INCH	REMOVED	PROTECTED	HERITAGE	REASON FOR REMOVAL
	10154	LO MB	16.0		16.0		
	10155	LO	8.0		8.0		
	10156	LO BB	14.0		14.0		
	10159	LO BB	20.5		20.5		
	10160	LO	9.0		9.0		
	10161	LO	14.0		14.0		
	10162	LO	10.0		10.0		
	10163	LO	11.0		11.0		
	10164	LO	8.0		8.0		
	10165	SO	8.0		8.0		
	10166	SO	8.0		8.0		
	10167	SO	12.0		12.0		
	10168	SO MB	17.5		17.5		
	10169	PO BB	21.0		21.0		
[*]	10170	SO	10.0	10.0			WQ POND
[*]	10171	LO	8.0	8.0			WQ POND
[*]	10172	SO MB	20.5	20.5			WQ POND
[*]	10173	LO	10.0	10.0			WQ POND
[*]	10174	LO	17.0	17.0			WQ POND
[*]	10175	CEDAR ELM	8.0	8.0			WQ POND
[*]	10176	LO	8.0	8.0			WQ POND
[*]	10177	LO BB	11.0	11.0			WQ POND
[*]	10178	LO	11.0	11.0			WQ POND
[*]	10179	LO MB	15.0	15.0			WQ POND
[*]	10180	LO	10.0	10.0			WQ POND
[*]	10181	LO	8.0	8.0			WQ POND
[*]	10182	LO	16.0	16.0			WQ POND
[*]	10183	LO	8.0	8.0			WQ POND

TREE LIST

	TREE NO.	TREE TYPE	CALIPER INCH	REMOVED	PROTECTED	HERITAGE	REASON FOR REMOVAL
[*]	10184	LO	16.0	16.0			WQ POND
[*]	10185	LO	14.0	14.0			WQ POND
[*]	10186	LO	10.0	10.0			WQ POND
[*]	10189	SO BB	11.5	11.5			WQ POND
[*]	10190	CEDAR ELM	8.0	8.0			WQ POND
[*]	10191	LO	11.0	11.0			WQ POND
[*]	10192	LO	10.0	10.0			WQ POND
[*]	10193	LO	13.0	13.0			WQ POND
[*]	10194	LO	13.0	13.0			WQ POND
[*]	10195	LO	10.0	10.0			WQ POND
[*]	10196	LO	9.0	9.0			WQ POND
[*]	10197	LO BB	19.5	19.5			WQ POND
	10198	LO	17.0		17.0		
[*]	10199	LO	15.0	15.0			ROW
[*]	10200	LO	14.0	14.0			ROW
	10201	LO	19.0		19.0		
[*]	10202	LO	10.0		10.0		WQ POND
[*]	10203	LO	8.0	8.0			WQ POND
	10204	LO	8.0		8.0		
[*]	10205	LO	12.0	12.0			ROW
	10206	LO BB	25.0		25.0		
	10207	LO	13.0		13.0		
H	10208	LO	29.0		29.0	Y	
	10209	LO	15.0		15.0		
	10210	CEDAR ELM	8.0		8.0		
H	10211	LO	32.0		32.0	Y	
	10212	CEDAR ELM	10.0		10.0		
	10213	CEDAR ELM	9.0		9.0		

TREE LIST

	TREE NO.	TREE TYPE	CALIPER INCH	REMOVED	PROTECTED	HERITAGE	REASON FOR REMOVAL
	10214	LO BB	12.0		12.0		
	10215	LO	11.0		11.0		
	10216	LO	10.0		10.0		
	10217	CEDAR ELM	9.0		9.0		
	10218	CEDAR ELM	10.0		10.0		
	10219	LO	10.0		10.0		
	10220	LO	9.0		9.0		
	10221	LO	11.0		11.0		
	10222	CEDAR ELM	9.0		9.0		
	10223	CEDAR ELM	8.0		8.0		
	10224	CEDAR ELM	10.0		10.0		
	10225	CEDAR ELM	9.0		9.0		
	10226	CEDAR ELM	8.0		8.0		
[*]	10227	LO	14.0	14.0			BLDG PAD
[*]	10228	LO	8.0	8.0			BLDG PAD
[*]	10229	LO BB	12.5	12.5			BLDG PAD
[*]	10230	LO	14.0	14.0			BLDG PAD
[*]	10231	LO	12.0	12.0			BLDG PAD
[*]	10232	LO	10.0	10.0			BLDG PAD
[*]	10233	LO MB	16.5	16.5			BLDG PAD
[*]	10234	LO	8.0	8.0			BLDG PAD
[*]	10235	LO BB	11.5	11.5			BLDG PAD
[*]	10236	LO	8.0	8.0			BLDG PAD
	10237	LO MB	16.0		16.0		
[*]	10238	LO BB	11.0	11.0			PUE
[*]	10239	LO	9.0	9.0			PUE
[*]	10240	LO BB	10.5	10.5			ROW
	10241	LO	8.0		8.0		

TREE LIST

	TREE NO.	TREE TYPE	CALIPER INCH	REMOVED	PROTECTED	HERITAGE	REASON FOR REMOVAL
	10242	LO MB	21.5		21.5		
	10243	LO	8.0		8.0		
	10244	LO	13.0		13.0		
	10245	LO	11.0		11.0		
	10246	LO	9.0		9.0		
	10247	CEDAR ELM	9.0		9.0		
	10248	LO	15.0		15.0		
	10249	LO	15.0		15.0		
	10250	LO	11.0		11.0		
	10251	LO	12.0		12.0		
[*]	10252	LO BB	11.0	11.0			WQ POND
[*]	10253	LO	8.0	8.0			WQ POND
	10254	LO	9.0		9.0		
	10255	LO	11.0		11.0		
[*]	10256	LO	9.0	9.0			ROW
[*]	10257	LO	11.0	11.0			ROW
[*]	10258	LO	8.0	8.0			ROW
	10259	LO	10.0		10.0		
[*]	10260	LO	12.0	12.0			ROW
[*]	10261	LO BB	11.0	11.0			ROW
	10262	LO	10.0		10.0		
	10263	LO	9.0		9.0		
	10264	LO	9.0		9.0		
	10265	CEDAR ELM	15.0		15.0		
	10266	LO	12.0		12.0		
	10267	LO	11.0		11.0		
	10268	CEDAR ELM	12.0		12.0		
	10269	LO	14.0		14.0		

TREE LIST

	TREE NO.	TREE TYPE	CALIPER INCH	REMOVED	PROTECTED	HERITAGE	REASON FOR REMOVAL
[*]	10270	LO	14.0	14.0			BLDG PAD
[*]	10271	LO	11.0	11.0			BLDG PAD
[*]	10272	CEDAR ELM	15.0	15.0			BLDG PAD
[*]	10273	LO BB	11.0	11.0			BLDG PAD
	10276	LO BB	15.0		15.0		
	10277	CEDAR ELM	16.0		16.0		
[*]	10278	LO BB	10.5	10.5			BLDG PAD
[*]	10279	LO	9.0	9.0			BLDG PAD
[*]	10280	LO	15.0	15.0			BLDG PAD
[*]	10281	LO	8.0	8.0			BLDG PAD
[*]	10282	LO	9.0	9.0			BLDG PAD
[*]	10283	LO	16.0	16.0			BLDG PAD
[*]	10284	LO	9.0	9.0			BLDG PAD
[*]	10285	LO	10.0	10.0			BLDG PAD
[*]	10286	LO	9.0	9.0			BLDG PAD
[*]	10287	LO	8.0	8.0			BLDG PAD
[*]	10288	LO MB	19.0	19.0			BLDG PAD
[*]	10289	LO BB	12.0	12.0			ROW
[*]	10290	LO MB	29.5	29.5			ROW
[*]	10291	LO MB	22.5	22.5			ROW
[*]	10292	LO BB	19.5	19.5			ROW
[*]	10293	MULTI LO MB	29.0	29.0			ROW
[*]	10294	LO BB	20.5	20.5			ROW
[*]	10295	LO	11.0	11.0			ROW
	10296	LO	14.0		14.0		
	10297	CEDAR ELM	8.0		8.0		
	10300	CEDAR ELM BB	12.5		12.5		
	10301	LO	9.0		9.0		

TREE LIST

	TREE NO.	TREE TYPE	CALIPER INCH	REMOVED	PROTECTED	HERITAGE	REASON FOR REMOVAL
	10302	LO	8.0		8.0		
	10303	CEDAR ELM	14.0		14.0		
[*]	50029	LO DBL	16.0	16.0			BLDG PAD
[*]	50030	LO	10.0	10.0			BLDG PAD
[*]	50031	LO	14.0	14.0			BLDG PAD
[*]	50032	LO	15.5	15.5			BLDG PAD
[*]	50033	LO DBL	22.25	22.25			BLDG PAD
[*]	50034	LO	18.0	18.0			BLDG PAD
[*]	50035	LO	15.5	15.5			BLDG PAD
[*]	50036	LO	9.0	9.0			BLDG PAD
H	50037	LO	27.0		27.0	Y	
	50038	LO	14.0		14.0		
	50039	LO	16.0		16.0		
	50040	LO	15.0		15.0		
	50041	LO TPL	29.0		29.0		
H	50059	LO DBL	39.75		39.75	Y	
H	50060	LO	35.5		35.5	Y	
	50085	LO	13.0		13.0		
	50086	LO	14.5		14.5		
	50087	LO DBL	24.0		24.0		
	50088	LO	13.0		13.0		
	50089	LO	20.0		20.0		
	50090	LO	14.0		14.0		
	50091	LO	13.0		13.0		
	50288	LO, ELM DBL	24.0		24.0		
	50441	LO DBL	25.0		25.0		
	50442	LO	19.5		19.5		
	50443	LO TPL	12.0		12.0		

TREE LIST

TREE NO.	TREE TYPE	CALIPER INCH	REMOVED	PROTECTED	HERITAGE	REASON FOR REMOVAL
50444	LO DBL	11.75		11.75		
50445	LO	10.0		10.0		
50446	LO	8.5		8.5		
50447	LO	8.0		8.0		
50448	LO DBL	10.5		10.5		
50449	LO	9.0		9.0		
50450	LO, ELM DBL	12.75		12.75		
50451	LO	11.0		11.0		
50452	LO	8.0		8.0		
50453	LO	11.0		11.0		
50454	LO, ELM DBL	13.5		13.5		
50455	LO	13.5		13.5		
50456	LO	8.0		8.0		
50457	LO	8.5		8.5		
50458	ELM	11.0		11.0		
50459	LO	9.5		9.5		
50460	LO	9.5		9.5		
50461	LO	10.0		10.0		
50462	LO	11.0		11.0		
50463	ELM TPL	15.5		15.5		
50464	LO	12.5		12.5		
50465	LO	8.0		8.0		
50466	ELM	9.5		9.5		
50467	LO	9.5		9.5		
50468	LO	11.0		11.0		
50469	LO	12.0		12.0		
50470	LO	13.0		13.0		
50471	LO	8.5		8.5		

TREE LIST

TREE NO.	TREE TYPE	CALIPER INCH	REMOVED	PROTECTED	HERITAGE	REASON FOR REMOVAL
50472	LO	8.0		8.0		
50473	LO	9.0		9.0		
50474	LO, ELM DBL	10.75		10.75		
50475	LO DBL	12.25		12.25		
50476	LO CLUSTER	11.0		11.0		
50477	LO	8.0		8.0		
50478	LO DBL	21.0		21.0		
50479	LO	10.0		10.0		
50480	LO DBL	11.0		11.0		
50481	LO	9.5		9.5		
50482	LO	15.5		15.5		
50483	LO	8.0		8.0		
50484	LO	8.0		8.0		
50485	ELM	12.5		12.5		
50486	LO	14.5		14.5		
50487	ELM	11.0		11.0		

TREE MITIGATION SUMMARY FOR PHASE 3

TREE MITIGATION REQUIREMENT SUMMARY:

	TOTAL INCHES	INCHES REMOVED	MITIGATION	INCHES RETAINED
TREES 8" – 18" SUBDIVISION	2614	476	0	2138
SIGNIFICANT TREES 18" and GREATER SUBDIVISION	569.75	220.25	0	349.5
HERITAGE TREES (3:1 REQUIRED) SUBDIVISION	216.25	0	0	216.25
TOTAL INCHES OF TREES	3400	696.25	0	2703.75

1. Per the Zoning Ordinance Trees within Building Pads are not included in the Mitigation Requirement

TREE MITIGATION SUMMARY (PRELIMINARY)

TREE MITIGATION REQUIREMENT SUMMARY:

	TOTAL INCHES	INCHES REMOVED	MITIGATION	INCHES RETAINED
SIGNIFICANT TREES 18"–26" SUBDIVISION	15,672.25	4089.25	0	11,583
HERITAGE TREES (3:1 REQUIRED) SUBDIVISION	370.25	0	0	370.25
TOTAL INCHES OF TREES	16,042.50	4089.25	0	11,953.25

NOTE:
1. MITIGATION FOR SIGNIFICANT TREES IS NOT REQUIRED BECAUSE OVER 50% ARE BEING RETAINED (73.91%)

FOR CITY OF LEANDER USE

20–PICP–011

DESIGNED BY: LAW | DRAFTED BY: ZHL & CMC

DATE	REVISION
03.24.20	INITIAL SUBMITTAL
05.18.20	UPDATE #1 SUBMITTAL
07.28.20	UPDATE #2 SUBMITTAL

Carlson, Brigance & Doering, Inc.
Civil Engineering ◆ Surveying
FIRM ID #F3791
Main Office: 5501 West William Cannon Dr., Austin, Texas 78749
North Office: 12129 RR 620 N., Ste. 600, Austin, Texas 78750
Phone No. (512) 280-5160 Fax No. (512) 280-5165

SHEET NAME: TREE LIST

JOB NAME: HOMESTEAD PHASE 3

PROJECT: STREET, DRAINAGE, WATER, AND WASTEWATER IMPROVEMENTS

8/10/2020

STATE OF TEXAS
LEE A. WHITED
102471
LICENSED PROFESSIONAL ENGINEER
CARLSON, BRIGANCE & DOERING, INC.
ID# F3791

DATE: NOVEMBER 2019

JOB NUMBER: 5172

SHEET 9 OF 61

SHEET NO. 9

FILE PATH:J:\AC3D\5172\dwg\5172-EROSION.dwg - Aug 10, 2020 - 4:20pm

OCE-ENGINEERING.CTB

EROSION CONTROL NOTES

1. THE CONTRACTOR SHALL INSTALL EROSION/SEDIMENTATION CONTROLS AND TREE/NATURAL AREA PROTECTIVE FENCING PRIOR TO ANY SITE PREPARATION WORK (CLEARING, GRUBBING OR EXCAVATION).

2. THE PLACEMENT OF EROSION/SEDIMENTATION CONTROLS SHALL BE IN ACCORDANCE WITH THE ENVIRONMENTAL CRITERIA MANUAL AND THE APPROVED EROSION AND SEDIMENTATION CONTROL PLAN. THE COA ESC PLAN SHALL BE CONSULTED AND USED AS THE BASIS FOR A TPDES REQUIRED SWPPP. IF A SWPPP IS REQUIRED, IT SHALL BE AVAILABLE FOR REVIEW BY THE CITY OF AUSTIN ENVIRONMENTAL INSPECTOR AT ALL TIMES DURING CONSTRUCTION, INCLUDING AT THE PRE-CONSTRUCTION MEETING.

3. THE PLACEMENT OF TREE/NATURAL AREA PROTECTIVE FENCING SHALL BE IN ACCORDANCE WITH THE CITY OF AUSTIN STANDARD NOTES FOR TREE AND NATURAL AREA PROTECTION AND THE APPROVED GRADING/TREE AND NATURAL AREA PLAN.

4. A PRE-CONSTRUCTION CONFERENCE SHALL BE HELD ON-SITE WITH THE CONTRACTOR, DESIGN ENGINEER/PERMIT APPLICANT AND ENVIRONMENTAL INSPECTOR AFTER INSTALLATION OF THE EROSION/SEDIMENTATION CONTROLS AND TREE/NATURAL AREA PROTECTION MEASURES AND PRIOR TO BEGINNING ANY SITE PREPARATION WORK. THE OWNER OR OWNER'S REPRESENTATIVE SHALL NOTIFY THE PLANNING AND DEVELOPMENT REVIEW DEPARTMENT, 974-2278, AT LEAST THREE DAYS PRIOR TO THE MEETING DATE. COA APPROVED ESC PLAN AND TPDES SWPPP (IF REQUIRED) SHOULD BE REVIEWED BY COA EV INSPECTOR AT THIS TIME.

5. ANY MAJOR VARIATION IN MATERIALS OR LOCATIONS OF CONTROLS OR FENCES FROM THOSE SHOWN ON THE APPROVED PLANS WILL REQUIRE A REVISION AND MUST BE APPROVED BY THE REVIEWING ENGINEER, ENVIRONMENTAL SPECIALIST OR CITY ABORIST AS APPROPRIATE. MAJOR REVISIONS MUST BE APPROVED BY THE PLANNING AND DEVELOPMENT REVIEW DEPARTMENT. MINOR CHANGES TO BE MADE AS FIELD REVISIONS TO THE EROSION AND SEDIMENTATION CONTROL PLAN MAY BE REQUIRED BY THE ENVIRONMENTAL INSPECTOR DURING THE COURSE OF CONSTRUCTION TO CORRECT CONTROL INADEQUACIES.

6. THE CONTRACTOR IS REQUIRED TO PROVIDE A CERTIFIED INSPECTOR WITH EITHER A CERTIFIED PROFESSIONAL IN EROSION AND SEDIMENT CONTROL (CPESC), CERTIFIED EROSION, SEDIMENT AND STORMWATER-INSPECTOR (CESSWI) OR CERTIFIED INSPECTOR OF SEDIMENTATION AND EROSION CONTROLS (CISEC) CERTIFICATION TO INSPECT THE CONTROLS AND FENCES AT WEEKLY INTERVALS AND AFTER SIGNIFICANT RAINFALL EVENTS TO INSURE THAT THEY ARE FUNCTIONING PROPERLY. THE PERSON(S) RESPONSIBLE FOR MAINTENANCE OF CONTROLS AND FENCES SHALL IMMEDIATELY MAKE ANY NECESSARY REPAIRS TO DAMAGED AREAS. SILT ACCUMULATION AT CONTROLS MUST BE REMOVED WHEN THE DEPTH REACHES SIX (6) INCHES.

7. PRIOR TO FINAL ACCEPTANCE BY THE CITY, HAUL ROADS AND WATERWAY CROSSINGS CONSTRUCTED FOR TEMPORARY CONTRACTOR ACCESS MUST BE REMOVED, ACCUMULATED SEDIMENT REMOVED FROM THE WATERWAY AND THE AREA RESTORED TO THE ORIGINAL GRADE AND REVEGETATED. ALL LAND CLEARING DEBRIS SHALL BE DISPOSED OF IN APPROVED SPOIL DISPOSAL SITES.

8. ALL WORK MUST STOP IF A VOID IN THE ROCK SUBSTRATE IS DISCOVERED WHICH IS; ONE SQUARE FOOT IN TOTAL AREA; BLOWS AIR FROM WITHIN THE SUBSTRATE AND/OR CONSISTENTLY RECEIVES WATER DURING ANY RAIN EVENT. AT THIS TIME IT IS THE RESPONSIBILITY OF THE PROJECT MANAGER TO IMMEDIATELY CONTACT A CITY OF AUSTIN ENVIRONMENTAL INSPECTOR FOR FURTHER INVESTIGATION.

9. TEMPORARY AND PERMANENT EROSION CONTROL:

ALL DISTURBED AREAS SHALL BE RESTORED AS NOTED BELOW.

A. ALL DISTURBED AREAS TO BE REVEGETATED ARE REQUIRED TO PLACE A MINIMUM OF SIX (6) INCHES OF TOPSOIL. MIX IS DESIGNATED AS 4 PART SOIL TO 1 COMPOST (20% COMPOST), BUT COL STANADARD IS 3 PARTS SOIL FOR 1 PART COMPOST (25% COMPOST). DO NOT ADD TOPSOIL WITHIN THE CRITICAL ROOT ZONE OF EXISTING TREES. THE TOPSOIL SHALL BE COMPOSED OF 4 PARTS OF SOIL MIXED WITH 1 PART COMPOST, BY VOLUME. THE COMPOST SHALL MEET THE DEFINITION OF COMPOST AS DEFINED BY TXDOT SPECIFICATION ITEM 161. THE SOIL SHALL BE LOCALLY AVAILABLE NATIVE SOIL THAT MEETS THE FOLLOWING SPECIFICATIONS:

- SHALL BE FREE OF TRASH, WEEDS, DELETERIOUS MATERIALS, ROCKS, AND DEBRIS.
- 100% SHALL PASS THROUGH A 1.5-INCH (38-MM) SCREEN.
- SOIL TO BE A LOAMY MATERIAL THAT MEETS THE REQUIREMENTS OF THE TABLE BELOW IN ACCORDANCE WITH THE USDA TEXTURAL TRIANGLE. SOIL KNOWN LOCALLY AS "RED DEATH" IS NOT AN ALLOWABLE SOIL. TEXTURAL COMPOSITION SHALL MEET THE FOLLOWING CRITERIA:
- AN OWNER/ENGINEER MAY PROPOSE USE OF ONSITE SALVAGED TOPSOIL WHICH DOES NOT MEET THE SOIL TEXTURE CLASS REQUIRED ABOVE BY PROVIDING A SOIL ANALYSIS AND A WRITTEN STATEMENT FROM A QUALIFIED PROFESSIONAL IN SOILS, LANDSCAPE ARCHITECTURE, OR AGRONOMY INDICATING THE ONSITE TOPSOIL WILL PROVIDE AN EQUIVALENT GROWTH MEDIA AND SPECIFYING WHAT, IF ANY, SOIL AMENDMENTS ARE REQUIRED.
- SOIL AMENDMENTS SHALL BE WORKED INTO THE EXISTING ONSITE TOPSOIL WITH A DISC OR TILLER TO CREATE A WELL-BLENDED MATERIAL.

TOPSOIL SALVAGED FROM THE EXISTING SITE MAY OFTEN BE USED, BUT IT SHOULD MEET THE SAME STANDARDS AS SET FORTH IN THESE STANDARDS.

THE VEGETATIVE STABILIZATION OF AREAS DISTURBED BY CONSTRUCTION SHALL BE AS FOLLOWS:

SPECIAL PROVISION

164 – WC 001

SEEDING FOR EROSION CONTROL

For this project, Item 164, "Seeding for Erosion Control," of the Standard Specifications, is hereby voided and replaced in its entirety with the clauses and requirements below.

PART 1- GENERAL

1.1 DESCRIPTION
Provide and install native grass seeding as shown in the plans or as directed.

1.2 RELATED ITEMS
A. Item 161-WC 001 "Compost"
B. Item 168-WC 001 "Vegetative Watering "
C. Item 160-WC 001 "Topsoil"
D. Item 636 "Aluminum Signs"
E. Item 644 "Small Roadside Sign Supports and Assemblies"

1.3 REFERENCES
A. Federal Seed Act
B. Texas Seed Law

1.4 MEASUREMENT
This item will be measured by the square yard, by the acre, or by the pound.

1.5 PAYMENT
A. The work performed and the materials furnished in accordance with the seeding Item and measured as provided under "Measurement" will be paid for at the unit price bid for "Seeding for Erosion Control." This price is full compensation for furnishing materials, including seed, mowing, labor, equipment, maintenance, tools, supplies, and incidentals.
B. When humic acid or MycoApply Endo are specified on the plans as a pay item, the work performed and the material furnished will be paid for at the unit price bid for "Humic Acid" or "MycoApply Endo" at the application rates specified. This price is full compensation for furnishing materials, labor, equipment, water, tools, supplies, and incidentals.

1.6 QUALITY CONTROL SUBMITTALS
A. Submit seeding product data, including plant tags and seed certification for native grass seed mix for approval.
B. Submit seed planting equipment method, manufacturer and data for approval.
C. Submit product data and sample for sign in accordance with Tex-726-I.
D. Submit humic acid and MycoApply Endo product data and supplier's information for approval.

PART 2 – PRODUCTS

2.1 MATERIALS
A. Native Grass Seed
Provide seed as shown in the plans or as directed, using Tables 1-11 to determine the appropriate seed mix and rates, and meeting the requirements of the Federal Seed Act and Texas Seed Law, including the testing and labeling for pure live seed (PLS= Purity and Germination). Minimum purity shall be 50%. The seed test to be conducted by the State Seed Laboratory, and a seed test report shall be submitted in accordance with 1.6, "Quality Control Submittals." Each type (mix) of seed must be mixed by the supplier and delivered in labeled and unopened bags or containers, unless otherwise approved by the Owner's representative. Do not blend the seed mixes on site. Use within twelve (12) months from that date of analysis. When Buffalograss is specified, use seed treated with KNO3 (potassium nitrate) to overcome dormancy.

Parts A and B of the seed mix tables are the primary seed mixes for application. In the event that a species in Part A or B of the mixes is not seasonally available, coordinate with the seed supplier to designate substitute species and quantities in the mix using Part C of the tables. Substitutions will only be allowed at the discretion of the County.

Seeds must be stored in a dry, well-ventilated location away from contaminants. Seed storage humidity level should be lower than 75%. Store any unused seed in a water resistant container. If seed will be stored longer than one (1) year, the optimal temperature range would be 40-60F.

During transit (from storage to sowing), seed should be protected from dramatic temperature fluctuations day after day; temperature cannot exceed 100F at any time. Seed must remain dry and protected from sun exposure. The transit period may not exceed ten (10) days.

Obtain native grass seed from any three of the approved providers:
1. Native American Seed, Junction TX. 1-800-728-4043
2. Wildseed Farms, Fredericksburg, TX. 1-800-848-0078
3. Douglas W. King Company, San Antonio, TX. 1-888-357-3337

Table 1: Type 1 – Standard Tall Native Grass Seed Mix
For Edward's Plateau and Blackland Prairie Eco-Regions

Part A: Wildflowers		
Species	Common Name	lbs per acre
Cassia (Chamaecrista) fasiculata	Partridge Pea	5.00
Centaurea americana	American Basketflower	5.00
Coreopsis tinctoria	Plains Coreopsis	2.00
Desmanthus illinoensis	Illinois Bundleflower	3.75
Engelmannia pinnatifida (Engelmannia peristenia)	Engelmann Daisy (Cutleaf Daisy)	9.00
Gaillardia pulchella	Indian Blanket	7.50
Helianthus maximiliani	Maximilian Sunflower	2.00
Ipomopsis rubra	Standing Cypress	3.00
Monarda citriodora	Lemon Mint	1.50
Oenothera speciosa	Pink Evening Primrose	0.50
Rudbeckia hirta	Black-eyed Susan	0.50
Thelesperma filifolium	Greenthread	2.00
		41.75

EROSION CONTROL NOTES - CONTINUED...

Table 1 (continued): Type 1 – Standard Tall Native Grass Seed Mix
For Edward's Plateau and Blackland Prairie Eco-Regions

Part B: Grasses		
Species	Common Name	lbs per acre
Bouteloua curtipendula	Sideoats Grama	14.00
Bouteloua gracilis	Blue Grama	15.00
Buchloe dactyloides	Buffalograss	6.00
Elymus canadensis	Canada (Prairie) Wildrye	10.00
Leptochloa dubia	Green Sprangletop	4.00
Panicum virgatum	Switchgrass (Upland)	2.00
Schizachyrium scoparium	Little Bluestem	4.00
Sorghastrum nutans	Indian Grass	3.00
		58.00

Part C: Replacement Species and/or Species added for Increased Diversity		
Species	Common Name	lbs per acre
Andropogon gerardii	Big Bluestem	4.00
Argemone albiflora	White Prickly Poppy	3.00
*Bothriochloa laguroides	Silver Bluestem	
Bouteloua rigidiseta	Texas Grama Grass	2.70
Callirhoe leiocarpa	Annual Winecup	1.20
Castilleja indivisa	Indian Paintbrush	0.15
Dalea candida (Petalostemon candidus)	White Prairie Clover	1.00
Eragrostis trichoides	Sand Lovegrass	0.50
liatris mucronata	Gayfeather	2.50
Lindheimera texana	Texas Yellow Star	3.00
Oenothera missouriensis	Missouri Primrose	0.50
Oenothera speciosa	Pink Evening Primrose	0.50
Salvia azurea	Pitcher Sage	0.25
Salvia farinacea	Mealy Blue Sage	1.50
Simsia calva	Bush Sunflower	1.75
Solidago nemoralis	Grey Goldenrod	1.75
*Midway Mix (Native American Seed)	Grasses 1'-2'	2.50

Source: Lady Bird Johnson Wildflower Center, 2010

Table 2: Type 2 – Standard Tall Native Grass Seed Mix
For Post Oak Savanna Eco-Region

Part A: Wildflowers		
Species	Common Name	lbs per acre
Cassia (Chamaecrista) fasiculata	Partridge Pea	5.00
Centaurea americana	American Basketflower	5.00
Coreopsis tinctoria	Plains Coreopsis	1.00
Desmanthus illinoensis	Illinois Bundleflower	3.75
Engelmannia pinnatifida (Engelmannia peristenia)	Engelmann Daisy (Cutleaf Daisy)	9.00
Ipomopsis rubra	Standing Cypress	3.00
Monarda citriodora	Lemon Mint	1.50
Oenothera speciosa	Pink Evening Primrose	0.25
Rudbeckia hirta	Black-eyed Susan	0.50
Thelesperma filifolium	Greenthread	2.00
		31.00

Part B: Grasses		
Species	Common Name	lbs per acre
Bouteloua curtipendula	Sideoats Grama	14.00
Bouteloua gracilis	Blue Grama	15.00
Buchloe dactyloides	Buffalograss	6.00
Elymus canadensis	Canada Wildrye	10.00
Eragrostis trichoides	Sand Lovegrass	0.50
Panicum virgatum	Switchgrass (Upland)	10.00
	Little bluestem	
Sporobolus cryptandrus	Sand Dropseed	1.00
Sorghastrum nutans	Indian Grass	3.00
		63.5

Part C: Replacement Species and/or Species added for Increased Diversity		
Species	Common Name	lbs per acre
Andropogon gerardii	Big Bluestem Grass	2.00
Argemone albiflora	White Prickly Poppy	2.00
Asclepias tuberosa	Butterfly Weed	2.50
Bouteloua rigidiseta	Texas Grama Grass	2.25
Callirhoe leiocarpa	Annual Winecup	1.00
Castilleja indivisa	Indian Paintbrush	0.15
Corydalis curvisiliqua	Scrambled Eggs	0.50
liatris mucronata	Gayfeather	2.25
Lindheimera texana	Texas Yellow Star	3.00
Salvia azurea	Pitcher Sage	1.50
Salvia farinacea	Mealy Blue Sage	1.50
Simsia calva	Bush Sunflower	1.25
Tridens flavus	Purpletop (Grass)	2.25
"Midway Mix" (Native American Seed)	Grasses 1'-2' tall	2.00

Source: Lady Bird Johnson Wildflower Center, 2010

Table 3: Type 3 – Riparian Native Grass Seed Mix
For Edward's Plateau, Blackland Prairie and Post Oak Savannah Eco-Regions

Part A: Wildflowers		
Species	Common Name	lbs per acre
Centaurea Americana	American Basketflower	5.00
Coreopsis tinctoria	Plains Coreopsis	4.00
Desmanthus illinoensis	Illinois Bundleflower	7.50
Engelmannia pinnatifida (Engelmannia peristenia)	Engelmann Daisy (Cutleaf Daisy)	9.00
Helianthus maximiliani	Maximilian Sunflower	2.00
Oenothera speciosa	Pink Evening Primrose	0.50
Rudbeckia (Dracopis) amplexicaulis	Clasping Coneflower	3.00
		31.00

Part B: Grasses		
Species	Common Name	lbs per acre
Bouteloua curtipendula	Sideoats Grama	14.00
Bouteloua gracilis	Blue Grama	15.00
Buchloe dactyloides	Buffalograss	6.00
Elymus canadensis	Canada (Prairie)	10.00
Leptochloa dubia	Green Sprangletop	4.00
Panicum virgatum	Switchgrass (Upland)	2.00
Schizachyrium scoparium	Little Bluestem	4.00
Sorghastrum nutans	Indian Grass	3.00
Tripsacum dactyloides	Eastern Gamagrass	10.00
		68.00

Part C: Replacement Species and/or Species added for Increased Diversity		
Species	Common Name	lbs per acre
Andropogon gerardii	Big Bluestem	1.00
Andropogon glomeratus	Bushy Bluestem Grass (for moist areas)	0.50
Chasmanthium latifolium	Inland Sea Oats	1.50
Physostegia intermedia	Obedient Plant	0.50
*Solidago altissima (S. canadensis)	Tall Goldenrod	0.75
*Solidago gigantea	Giant Goldenrod	0.75
Salvia azurea	Pitcher Sage	0.75
"Midway Mix" (Native American Seed)	Grasses 1'-2' tall	2.50

Source: Lady Bird Johnson Wildflower Center, 2009

Table 4: Type 4 - Cool Season Native Grass Seed Mix
For Edward's Plateau, Blackland Prairie and Post Oak Savannah Eco-Regions

Species	Common Name	lbs per acre
Elymus canadensis	Prairie Wildrye	10.00
Pascopyrum smithii	Western Wheatgrass	9.00
Dalea candida (var. candida)	White Prairie Clover	3.00
		22.00

Source: Lady Bird Johnson Wildflower Center, 2009

Table 5: Type 5 – Spring Native Grass Seed Mix
For Edward's Plateau and Blackland Prairie Eco-Regions

Species	Common Name	lbs per acre
Bouteloua curtipendula	Sideoats grama	14.00
Bouteloua gracilis	Blue grama	15.00
Buchloe dactyloides	Buffalograss	6.00
Elymus canadensis	Canada wildrye	10.00
Leptochloa dubia	Green sprangletop	4.00
Panicum virgatum	Switchgrass (upland variety)	2.00
Schizachyrium scoparium	Little bluestem (native)	4.00
Sorghastrum nutans	Indian grass	3.00
		58.00

Source: Lady Bird Johnson Wildflower Center, 2009

Table 6: Type 6 – Spring Native Grass Seed Mix
For Post Oak Savannah Eco-Region

Species	Common Name	lbs per acre
Bouteloua curtipendula	Sideoats grama	14.00
Bouteloua gracilis	Blue grama	15.00
Buchloe dactyloides	Buffalograss	6.00
Elymus canadensis	Canada wildrye	10.00
Eragrostis trichoides	Sand lovegrass	0.50
Panicum virgatum	Switchgrass (upland variety)	10.00
Schizachyrium scoparium	Little bluestem (native)	4.00
Sporobolus cryptandrus	Sand dropseed	1.00
Sorghastrum nutans	Indian grass	3.00
		63.50

Source: Lady Bird Johnson Wildflower Center, 2009

EROSION CONTROL NOTES - CONTINUED...

Table 7: Type 7 – Standard Short Native Grass Seed Mix
For Edward's Plateau and Blackland Prairie Eco-Regions

Part A: Wildflowers		
Species	Common Name	lbs per acre
Cassia (Chamaecrista) fasiculata	Partridge Pea	5.00
Coreopsis tinctoria	Plains Coreopsis	1.00
Lupinus texensis	Bluebonnet	15.00
Gaillardia pulchella	Indian Blanket	10.00
Mondarda citriodora	Lemon Mint	3.00
Oenothera speciosa	Pink Evening Primrose	0.50
Rudbecia hirta	Black-eyed Susan	2.00
Thelesperma filifolium	Greenthread	1.50
		38.00

Part B: Grasses		
Species	Common Name	lbs per acre
Bouteloua curtipendula	Sideoats Grama	21.00
Bouteloua gracilis	Blue Grama	35.00
Buchloe dactyloides	Buffalograss	50.00
Elymus Canadensis	Prairie Wildrye	10.00
Eragrostis trichoides	Sand Lovegrass	0.50
		116.5

Part C: Replacement Species and/or Species added for Increased Diversity		
Species	Common Name	lbs per acre
Bouteloua rigidiseta	Texas Gama Grass	2.25
Callirhoe leiocarpa	Annual Winecup	1.00
Castilleja indivisa	Indian Paintbrush	0.15
Corydalis curvisiliqua	Scrambled Eggs	0.50
liatris mucronata	Gayfeather	2.25
Oenothera missouriensis	Missouri Primrose	1.75
Dalea candida (Petalostemon candidus)	White Prairie Clover	0.75
Salvia farinacea	Mealy Blue Sage	1.50
Simsia calva	Bush Sunflower	1.75
"Midway Mix" (Native American Seeds)	Grasses 1'-2' tall	2.50

Source: Lady Bird Johnson Wildflower Center, 2010

Table 8: Type 8 – Standard Short Native Grass Seed Mix
For Post Oak Savannah Eco-Region

Part A: Wildflowers		
Species	Common Name	lbs per acre
Cassia (Chamaecrista) fasiculata	Partridge Pea	5.00
Centaurea americana	American Basketflower	5.00
Coreopsis tinctoria	Plains Coreopsis	2.00
Desmanthus illinoensis	Illinois Bundleflower	3.75
Engelmannia pinnatifida	Engelmann Daisy (Cutleaf Daisy)	9.00
Gaillardia pulchella	Indian Blanket	7.50
Ipomopsis rubra	Standying Cypress	3.00
Mondardo citriodora	Lemon Mint	1.50
Oenothera speciosa	Pink Evening Primrose	0.25
Rudbecia herta	Black-eyed Susan	0.50
Thelesperma filifolium	Greenthread	2.00
		39.50

Part B: Grasses		
Grasses	Species	lbs per acre
Bouteloua curtipendula	Sideoats Grama	14.00
Bouteloua gracilis	Blue Grama	15.00
Buchloe dactyloides	Buffalograss	6.00
Elymus canadensis	Canada Wildrye	10.00
Schizachyrium scoparium	Little Bluestem (Native)	8.00
		53.00

Part C: Replacement Species and/or Species added for Increased Diversity		
Grasses	Species	lbs per acre
Argemone albiflora	White Prickly Poppy	2.50
Bouteloua rigidiseta	Texas Grama Grass	2.75
Callirhoe leiocarpa	Annual Winecup	1.00
Castilleja indivisa	Indian Paintbrush	0.15
Eragrostis trichoides	Sand Lovegrass	0.50
liatris mucronata	Gayfeather	2.50
Lindheimera texana	Texas Yellow Star	3.00
Oenothera missouriensis	Missouri Primrose	0.50
Oenothera speciosa	Pink Evening Primrose	0.25
Salvia azurea	Pitcher Sage	0.75
Salvia farinacea	Mealy Blue Sage	1.50
Simsia calva	Bush Sunflower	1.25
"Midway Mix" (Native American Seeds)	Grasses 1'-2' tall	2.50

Source: Lady Bird Johnson Wildflower Center, 2010

Table 9: Type 9 – Bare Patch Repair Mix
For Edward's Plateau, Blackland Prairie and Post Oak Savannah Eco-Regions

Species	Common Name	lbs per acre
Bouteloua curtipendula	Sideoats grama	25.00
Bouteloua gracilis	Blue grama	10.00
Leptochloa dubia	Green sprangletop	10.00
		45.00

Source: Lady Bird Johnson Wildflower Center, 2009

B. Cool Season Temporary Cover Seed
If native grass seed is to be installed during the winter period of November 8 – February 14, then Table 4 (temporary cool season mix) must be incorporated into the native grass seed mix, as specified on the plans, or as directed.

C. Compost Manufactured Topsoil (CMT) and Erosion Control Compost (ECC)
As specified in Item 161–WC 001 "Compost."

D. Topsoil
As specified in Item 160–WC 001 "Topsoil."

E. Humic Acid
Humic Acid can be obtained from the following supplier or approved equal:
1. Medina Agriculture Products 1-830-426-3011.

F. Mycorrhizal Fungi
MycoApply Endo, produced by Mycorrhizal Applications, Inc. can be obtained from the following supplier or approved equal:
1. Horizon Distributors, Inc. 512-282-2331
This product will require de-chlorinated, clean, fresh water for application.

G. Vegetative Watering
Clean, fresh and free of substances or matter that could inhibit vigorous growth of plants. As specified in Item 168–WC 001 "Vegetative Watering".

H. No Mowing Notice Sign
As specified in Item 636 "Aluminum Signs."

I. Sign Support
As specified in Item 644 "Small Roadside Sign Supports and Assemblies."

PART 3 – EXECUTION

3.1 SEQUENCING
A. Following fine grading and topsoil or compost installation, initiate seed installation as specified in the plans or as directed to disturbed roadside areas and channels. If road base operations have not been completed, exclude seeding install fifteen (15) feet from the road pavement.
B. Following road pavement, initiate seed installation following grading and topsoil or compost installation to remaining disturbed areas, as specified in the plans or as directed.
C. Install no mowing notice signs in accordance with the plans or as directed at time of Final Acceptance.

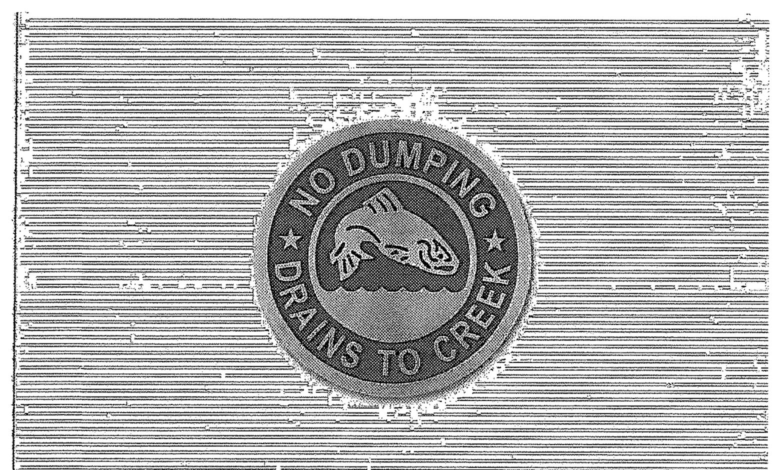

NOTES:
1. INSTALL 4" DIAMETER STAINLESS STEEL "NO DUMPING – DRAINS TO CREEK" MARKER, FACTORY PAINTED BLUE AS SHOWN, 2" ABOVE VERTICAL FACE OF INLET AT MIDPOINT OF ALL INLETS.
2. MARKER SHALL BE AFFIXED TO SURFACE WITH ADHESIVE PER MANUFACTURER'S RECOMMENDATIONS.
3. MARKER SHALL BE MANUFACTURED BY ALMATEK INDUSTRIES OR APPROVED EQUAL:
ALMATEK INDUSTRIES, INC.
2 JOY DRIVE
HACKETTSTOWN, NJ 07840
(800) 248-2080
WWW.ALMATEK.COM

WAYNE S. WATTS 88134 LICENSED PROFESSIONAL ENGINEER — 06/20/18
City Of Leander, Texas
DETAIL #303-3
STORM DRAIN MARKERS

Table 10: Type 1, 2, 7, 8 and 9 Seeding Schedule

	OPTIMUM PLANTING TIME Fall Seeding	Winter Seeding	Spring Seeding	Summer Seeding
Seeding Dates	Sept. 21 - Nov. 7	Nov. 8 - Feb. 14	Feb. 15 - June 15	June 16 - Sept. 20
Grass Type	Type 1 Type 2 Type 7 Type 8 Type 9	Type 1 Type 2 Type 6 Type 7 Type 9	Type 5 or 6	NO SEEDING
	Standard Native Grass Mix	Standard Native Grass Mix	Spring Mix	Apply Erosion Control Compost (ECC)
		PLUS	PLUS (Only if Directed)	PLUS
Supplemental Grass		Table 4 Cool Season Non-Native Grass Seed Mix	Apply the Table 2: Type 2 Wildflower Seed Mix in the next Fall Seeding Time Period	Apply the Type 1- Standard Native Grass Mix in the Fall Seeding Time Period

Table 11: Type 3 Seeding Schedule

	OPTIMUM PLANTING TIME Fall Seeding	Winter Seeding	Spring Seeding	Summer Seeding
Seeding Dates	Sept. 21 - Nov. 7	Nov. 8 - Feb. 14	Feb. 15 - June 15	June 16 - Sept. 20
Grass Type	Type 3	Type 3	Type 3	NO SEEDING
	Riparian Native Grass Seed Mix	Riparian Native Grass Seed Mix	Riparian Native Grass Seed Mix	Apply Erosion Control Compost (ECC)
		PLUS		PLUS
Supplemental Grass		Type 4		
		Cool Season Non-Native Grass Seed Mix		Apply the Type 3- Riparian Native Grass Seed Mix in the Fall Seeding Time Period

D. Vegetative Watering
Provide vegetative watering to seeded areas shown on the plan immediately after seed installation for healthy vegetative establishment, in accordance with Item 168-WC 001, "Vegetative Watering" or as directed.

E. No Mow Signs
At final acceptance, post signs at locations indicated on the plans or as directed to prevent mowing of established native grass stands.

3.3 MAINTENANCE
A. Requirements
1. Maintain the native grass areas during and after construction until the certificate of completion is issued.
2. Maintain the erosion control compost (ECC) if the seeding time falls in the summer period. Seed the specified grass mix when the fall seeding period begins.
3. Maintain native grass areas to establish vigorous growth and plant establishment of native grass mix. Establish an overall vegetative cover of 70-80% minimum with no single bare area larger than 100 SF. Areas should have at least 30% of species diversity and be four (4) to six (6) inches in height.
4. Watering of the native grass seed shall be in accordance with Item 168-WC 001, "Vegetative Watering."
5. Posted signs should be repaired or replaced immediately if found to be damaged or missing.

B. Schedule
1. Inspect the grass areas weekly and within 24 hours after each rain event of one half inch (1/2") or more. Restore eroded areas to finished grade and reseed.
2. Reseed areas that have not established if grass cover is less than 80% of coverage (TCEQ, 2005).
3. Inspect seeded areas every two weeks during establishment phase to check for invasive species, refer to Invasive Species Control.

NOTES FOR TREE AND NATURAL PROTECTION

1. ALL TREES AND NATURAL AREAS SHOWN ON PLAN TO BE PRESERVED SHALL BE PROTECTED DURING CONSTRUCTION WITH TEMPORARY FENCING.
2. PROTECTIVE FENCES SHALL BE ERECTED ACCORDING TO CITY OF AUSTIN STANDARDS FOR TREE PROTECTION.
3. PROTECTIVE FENCES SHALL BE INSTALLED PRIOR TO THE START OF ANY SITE PREPARATION WORK (CLEARING, GRUBBING OR GRADING), AND SHALL BE MAINTAINED THROUGHOUT ALL PHASES OF THE CONSTRUCTION PROJECT.
4. EROSION AND SEDIMENTATION CONTROL BARRIERS SHALL BE INSTALLED OR MAINTAINED IN A MANNER WHICH DOES NOT RESULT IN SOIL BUILD-UP WITHIN TREE DRIP LINES.
5. PROTECTIVE FENCES SHALL SURROUND THE TREES OR GROUP OF TREES, AND WILL BE LOCATED AT THE OUTERMOST LIMIT OF BRANCHES (DRIP LINE), FOR NATURAL AREAS, PROTECTIVE FENCES SHALL FOLLOW THE LIMIT OF CONSTRUCTION LINE, IN ORDER TO PREVENT THE FOLLOWING:
(A) SOIL COMPACTION IN THE ROOT ZONE AREA RESULTING FROM VEHICULAR TRAFFIC OR STORAGE OF EQUIPMENT OR MATERIALS;
(B) ROOT ZONE DISTURBANCES DUE TO GRADE CHANGES (GREATER THAN 6 INCHES CUT OR FILL), OR TRENCHING NOT REVIEWED AN AUTHORIZED BY THE CITY ARBORIST;
(C) WOUNDS TO EXPOSED ROOTS, TRUNK OR LIMBS BY MECHANICAL EQUIPMENT;
(D) OTHER ACTIVITIES DETRIMENTAL TO TREES SUCH AS CHEMICAL STORAGE, CEMENT TRUCK CLEANING, AND FIRES.
6. EXCEPTIONS TO INSTALLING FENCES AT TREE DRIP LINES MAY BE PERMITTED IN THE FOLLOWING CASES:
(A) WHERE THERE IS TO BE AN APPROVED GRADE CHANGE, IMPERMEABLE PAVING SURFACE, TREE WELL, OR OTHER SUCH SITE DEVELOPMENT, ERECT THE FENCE APPROXIMATELY 2 TO 4 FEET BEYOND THE AREA DISTURBED;
(B) WHERE PERMEABLE PAVING IS TO BE INSTALLED WITHIN A TREE'S DRIP LINE, ERECT THE FENCE AT THE OUTER LIMITS OF THE PERMEABLE PAVING AREA (PRIOR TO SITE GRADING SO THAT THIS AREA IS GRADED SEPARATELY PRIOR TO PAVING INSTALLATION TO MINIMIZED ROOT DAMAGE);
(C) WHERE TREES ARE CLOSE TO PROPOSED BUILDINGS, ERECT THE FENCE TO ALLOW 6 TO 10 FEET OF WORK SPACE BETWEEN THE FENCE AND THE BUILDING;
(D) WHERE THERE ARE SEVERE SPACE CONSTRAINTS DUE TO TRACT SIZE, OR OTHER SPECIAL REQUIREMENTS, CONTACT THE ENVIRONMENTAL INSPECTOR TO DISCUSS ALTERNATIVES.

SPECIAL NOTE: FOR THE PROTECTION OF NATURAL AREAS, NO EXCEPTIONS TO INSTALLING FENCES AT THE LIMIT OF CONSTRUCTION LINE WILL BE PERMITTED.

7. WHERE ANY OF THE ABOVE EXCEPTIONS RESULT IN A FENCE BEING CLOSER THAN 4 FEET TO A TREE TRUNK, PROTECT THE TRUNK WITH STRAPPED-ON PLANKING TO A HEIGHT OF 8 FT (OR TO THE LIMITS OF LOWER BRANCHING) IN ADDITION TO THE REDUCED FENCING PROVIDED.
8. TREES APPROVED FOR REMOVAL SHALL BE REMOVED IN A MANNER WHICH DOES NOT IMPACT TREES TO BE PRESERVED.
9. ANY ROOTS EXPOSED BY CONSTRUCTION ACTIVITY SHALL BE PRUNED FLUSH WITH THE SOIL. BACKFILL ROOT AREAS WITH GOOD QUALITY TOP SOIL PER CITY OF LEANDER SPECIFICATIONS AS SOON POSSIBLE. IF EXPOSED ROOT AREAS ARE NOT BACKFILLED WITHIN 2 DAYS, COVER THEM WITH ORGANIC MATERIAL IN A MANNER WHICH REDUCES SOIL TEMPERATURE AND MINIMIZES WATER LOSS DUE TO EVAPORATION.
10. ANY TRENCHING REQUIRED FOR THE INSTALLATION OF LANDSCAPE IRRIGATION SHALL BE PLACED AS FAR FROM EXISTING TREE TRUCKS TRUNKS AS POSSIBLE.
11. NO LANDSCAPE TOPSOIL DRESSING GREATER THAN 4 INCHES SHALL BE PERMITTED WITHIN THE DRIP LINE OF TREES. NO SOIL IS PERMITTED ON THE ROOT FLARE OF ANY TREE.
12. PRUNING TO PROVIDE CLEARANCE FOR STRUCTURES, VEHICULAR TRAFFIC AND EQUIPMENT SHALL TAKE PLACE BEFORE DAMAGE OCCURS (RIPPING OF BRANCHES, ETC.)
13. ALL FINISHED PRUNING SHALL BE DONE ACCORDING TO RECOGNIZED, APPROVED STANDARDS FOR THE INDUSTRY (REFERENCE THE NATIONAL ARBORIST ASSOCIATION PRUNING STANDARDS FOR SHADE TREES AVAILABLE ON REQUEST FROM THE CITY ARBORIST.)
14. DEVIATIONS FROM THE ABOVE NOTES MAY BE CONSIDERED ORDINANCE VIOLATIONS IF THERE IS SUBSTANTIAL NONCOMPLIANCE OR IF TREE SUSTAINS DAMAGE AS A RESULT.

DEVELOPER INFORMATION:

OWNER: GEHAN HOMES, LTD.
PHONE # (512) 330-9366
ADDRESS 3815 S. CAPITAL OF TEXAS HIGHWAY SUITE 275

OWNER'S REPRESENTATIVE RESPONSIBLE FOR PLAN ALTERATIONS:

LEE A. WHITED P.E.
CARLSON, BRIGANCE AND DOERING, INC. CIVIL ENGINEERING & SURVEYING
PHONE NO. (512) 280-5160; FAX NO. (512) 280-5165

PERSON OR FIRM RESPONSIBLE FOR EROSION/SEDIMENTATION CONTROL AINTENANCE:
LEE A WHITED, P.E. PHONE # (512) 280-5160

PERSON OR FIRM RESPONSIBLE FOR TREE/NATURAL AREA PROTECTION MAINTENANCE:
LEE A WHITED, P.E. PHONE # (512) 280-5160

NOTES FOR LANDSCAPING AND IRRIGATION

IRRIGATION NOTES

AUTOMATIC IRRIGATION SYSTEMS SHALL COMPLY WITH THE FOLLOWING REQUIREMENTS. THESE REQUIREMENTS SHALL BE NOTED ON THE SITE DEVELOPMENT PERMIT AND SHALL BE IMPLEMENTED AS PART OF THE LANDSCAPE INSPECTION:

1. A NEW COMMERCIAL AND MULTI-FAMILY IRRIGATION SYSTEM MUST BE DESIGNED AND INSTALLED SO THAT:
(A) THERE IS NOT DIRECT OVERSPRAY ONTO NON-IRRIGATED AREAS;
(B) THE SYSTEM DOES NOT INCLUDE SPRAY IRRIGATION ON AREAS LESS THAN SIX (6) FEET WIDE (SUCH AS MEDIANS, BUFFER STRIPS, AND PARKING LOT ISLANDS)
(C) ABOVE-GROUND IRRIGATION EMISSION DEVICES ARE SET BACK AT LEAST SIX (6) INCHES FROM IMPERVIOUS SURFACES;
(D) THE IRRIGATION SYSTEM HAS A MASTER VALVE;
(E) CIRCUIT REMOTE CONTROL VALVES HAVE ADJUSTABLE FLOW CONTROLS;
(F) SERVICEABLE IN-HEAD CHECK VALVES ARE ADJACENT TO PAVED AREAS WHERE ELEVATION DIFFERENCES MAY CAUSE LOW HEAD DRAINAGE;
(G) THE IRRIGATION SYSTEM HAS A CITY- APPROVED WEATHER BASED CONTROLLER;
(H) AN AUTOMATIC RAIN SHUT-OFF DEVICE SHUTS OFF THE IRRIGATION SYSTEM AUTOMATICALLY AFTER NOT MORE THAN A ONE-HALF INCH (1/2") RAINFALL;
(I) ZONE VALVES AND CIRCUITS ARE SEPARATED BASED ON PLANT WATER REQUIREMENTS;
(J) AN IRRIGATION EMISSION DEVICE (SUCH AS SPRAY, ROTOR, OR DRIP EMITTER) DOES NOT EXCEED THE MANUFACTURER'S RECOMMENDED OPERATING PRESSURE; AND
(K) NO COMPONENT OF THE IRRIGATION SYSTEM DEVIATES FROM THE MANUFACTURER'S RECOMMENDED USE OF THE PRODUCT.

2. THE MAXIMUM SPACING BETWEEN SPRAY OR ROTARY SPRINKLER HEADS MUST NOT EXCEED THE RADIUS OF THROW OF THE HEAD UNLESS MANUFACTURER OF THE SPRINKLER HEAD SPECIFICALLY RECOMMENDS A GREATER SPACING. THE RADIUS OF THROW IS DETERMINED BY REFERENCE TO THE MANUFACTURER'S SPECIFICATIONS FOR A SPECIFIC NOZZLE AT A SPECIFIC OPERATING PRESSURE.

3. THE IRRIGATION INSTALLER SHALL DEVELOP AND PROVIDE AN AS-BUILT DESIGN PLAN AND WATER BUDGET TO THE CITY AT THE TIME THE FINAL PLUMBING INSPECTION IS PERFORMED. THE WATER BUDGET SHALL INCLUDE:
(A) A CHART CONTAINING ZONE NUMBERS, PRECIPITATION RATE, AND GALLONS PER MINUTE; AND
(B) THE LOCATION OF THE EMERGENCY IRRIGATION SYSTEM SHUT-OFF VALVE. A LAMINATED COPY OF THE WATER BUDGET SHALL BE PERMANENTLY INSTALLED INSIDE THE IRRIGATION CONTROLLER DOOR.

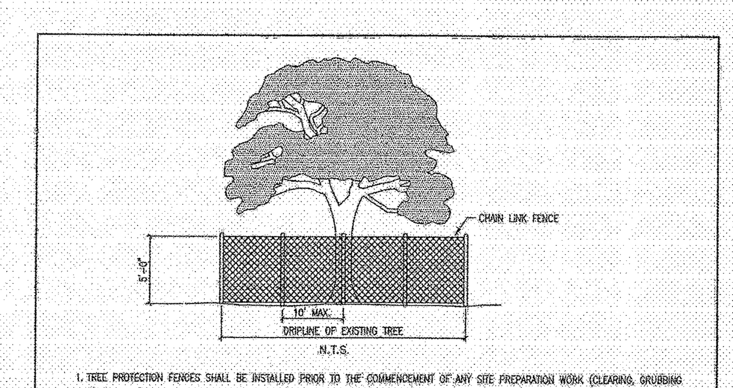

1. TREE PROTECTION FENCES SHALL BE INSTALLED PRIOR TO THE COMMENCEMENT OF ANY SITE PREPARATION WORK (CLEARING, GRUBBING OR GRADING).
2. FENCES SHALL COMPLETELY SURROUND THE TREE, OR CLUSTERS OF TREES; SHALL BE LOCATED AT THE OUTERMOST LIMIT OF THE TREE BRANCHES (DRIPLINE), AND SHALL BE MAINTAINED THROUGHOUT THE CONSTRUCTION PROJECT IN ORDER TO PREVENT THE FOLLOWING:
A. SOIL COMPACTION IN THE ROOT ZONE AREA RESULTING FROM VEHICULAR TRAFFIC, OR STORAGE OF EQUIPMENT OR MATERIALS.
B. ROOT ZONE DISTURBANCES DUE TO GRADE CHANGES (GREATER THAN SIX INCHES (6")) CUT OR FILL, OR TRENCHING NOT REVIEWED AND AUTHORIZED BY THE CITY.
C. WOUNDS TO EXPOSED ROOTS, TRUNKS OR LIMBS BY MECHANICAL EQUIPMENT.
D. OTHER ACTIVITIES DETRIMENTAL TO TREES, SUCH AS CHEMICAL STORAGE, CEMENT TRUCK CLEANING AND FIRE.
3. EXCEPTIONS TO INSTALLING FENCES AT TREE DRIPLINES MAY BE PERMITTED IN THE FOLLOWING CASES:
A. WHERE PERMEABLE PAVING IS TO BE INSTALLED, ERECT THE FENCE AT THE OUTER LIMITS OF THE PERMEABLE PAVING AREA.
B. WHERE TREES ARE CLOSE TO PROPOSED BUILDINGS, ERECT THE FENCE NO CLOSER THAN SIX FEET (6'-0") TO BUILDING.
4. CRITICAL ROOT ZONE REQUIREMENTS
A. NO CONSTRUCTION OR DISTURBANCE SHALL OCCUR WITHIN AN AREA THAT CONSTITUTES MORE THAN FIFTY (50%) OF THE TOTAL CRITICAL ROOT ZONE AND ONE HALF THE RADIAL DISTANCE OF THE CRITICAL ROOT ZONE FOR EACH TREE BEING PRESERVED INCLUDING SIGNIFICANT TREES, HERITAGE TREES, AND ANY OTHER TREES FOR WHICH PRESERVATION IS TO BE CREDITED. THE REMAINING CRITICAL ROOT ZONE SHALL CONSIST OF AT LEAST ONE HUNDRED (100) SQUARE FEET.
B. THIS DEFINED AREA SHALL BE FLAGGED AND ENCIRCLED WITH PROTECTIVE FENCING DURING CONSTRUCTION. THE PLANNING DIRECTOR MAY APPROVE CONSTRUCTION CLOSER TO THE TRUNK THAN ONE HALF (½) THE RADIAL DISTANCE, DEPENDING ON THE SIZE, SPACING, OR SPECIES OF THE TREE, THE TYPE OF DISTURBANCE PROPOSED, AND UNIQUENESS OF THE SITUATION.
C. CUT OR FILL THAT IS GREATER THAN FOUR (4) INCHES IN DEPTH AND THE SEVERING OF MAJOR ROOTS SHALL BE CONSIDERED DISTURBANCE FOR THE PURPOSES OF THIS ORDINANCE.
D. WITHIN THE PROTECTED CRITICAL ROOT ZONE, ONLY FLATWORK, DECKING, OR SIMILAR CONSTRUCTION, MAY BE APPROVED AND SHALL NOT AFFECT THE BRANCHING OF THE TREE.
E. IF PROPOSED OR ACTUAL PROTECTION OF THE CRITICAL ROOT ZONE OF A TREE DOES NOT MEET THE REQUIREMENTS OF THIS SECTION, THEN THE TREE SHALL BE CONSIDERED REMOVED AND SHALL REQUIRE MITIGATION IN ACCORDANCE WITH THIS ORDINANCE.

WAYNE S. WATTS 88134 LICENSED — 08/21/15
City Of Leander, Texas
303-2
TREE PROTECTION

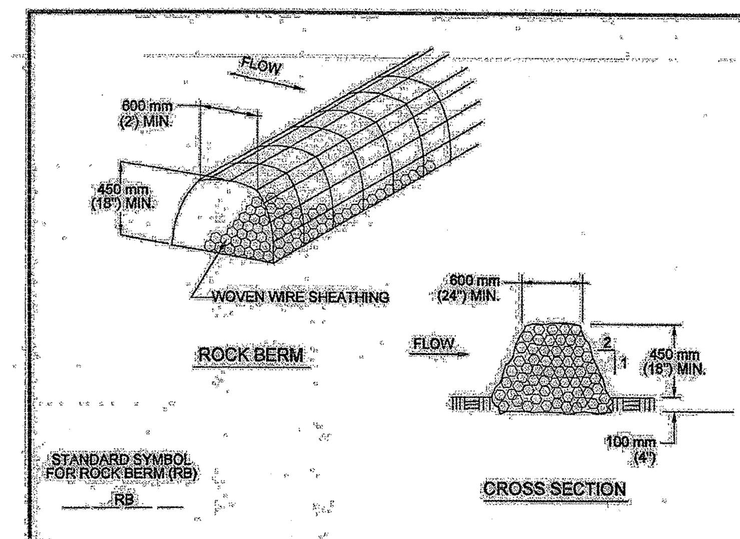

NOTES:
1. USE ONLY OPEN GRADED ROCK 75 to 125 mm (3 to 5") DIAMETER FOR ALL CONDITIONS.
2. THE ROCK BERM SHALL BE SECURED WITH A WOVEN WIRE SHEATHING HAVING MAXIMUM 25 mm (1") OPENING AND MINIMUM WIRE DIAMETER OF 12.9 mm (20 GAUGE).
3. THE ROCK BERM SHALL BE INSPECTED DAILY OR AFTER EACH RAIN, AND THE STONE AND/OR FABRIC CORE-WOVEN SHEATHING SHALL BE REPLACED WHEN THE STRUCTURE CEASES TO FUNCTION AS INTENDED, DUE TO SEDIMENT ACCUMULATION AMONG THE ROCKS, WASHOUT, CONSTRUCTION TRAFFIC DAMAGE, ETC.
4. IF SEDIMENT REACHES A DEPTH EQUAL TO ONE-THIRD THE HEIGHT OF THE BERM OR 150 mm (6"), WHICHEVER IS LESS, THE SEDIMENT SHALL BE REMOVED AND DISPOSED OF ON AN APPROVED SITE AND IN A MANNER THAT WILL NOT CREATE A SEDIMENTION PROBLEM.
5. WHEN THE SITE IS COMPLETELY STABILIZED,THE BERM AND ACCUMULATED SEDIMENT SHALL BE REMOVED AND DISPOSED OF IN AN APPROVED MANNER.

CITY OF AUSTIN WATERSHED PROTECTION DEPARTMENT	ROCK BERM	
8/24/2010 ADOPTED	THE ARCHITECT/ENGINEER ASSUMES RESPONSIBILITY FOR APPROPRIATE USE OF THIS STANDARD.	STANDARD NO. 639S-1

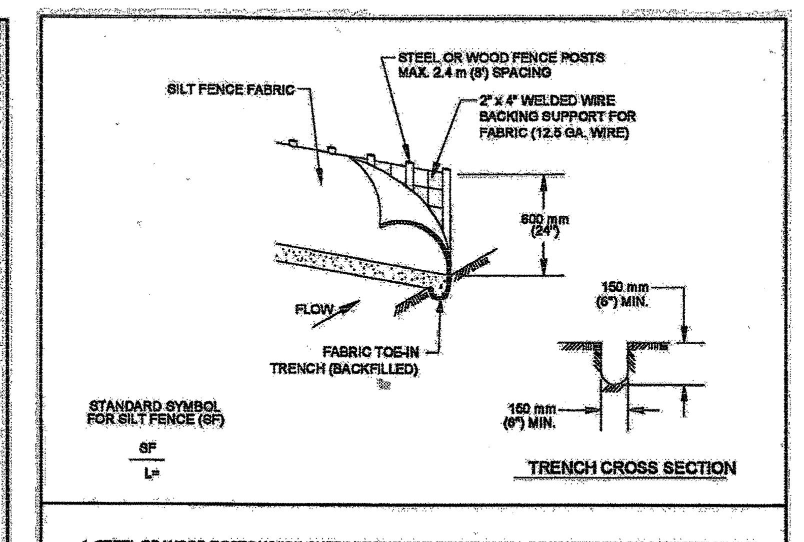

1. STEEL OR WOOD POSTS WHICH SUPPORT THE SILT FENCE SHALL BE INSTALLED ON A SLIGHT ANGLE TOWARD THE ANTICIPATED RUNOFF SOURCE. POST MUST BE EMBEDDED A MINIMUM OF 300 mm (12 INCHES). IF WOOD POSTS CANNOT ACHIEVE 300 mm (12 Inches) DEPTH, USE STEEL POSTS.

2. THE TOE OF THE SILT FENCE SHALL BE TRENCHED IN WITH A SPADE OR MECHANICAL TRENCHER, SO THAT THE DOWNSLOPE FACE OF THE TRENCH IS FLAT AND PERPENDICULAR TO THE LINE OF FLOW.

3. THE TRENCH MUST BE A MINIMUM OF 150 mm (6 Inches) DEEP AND 150 mm (6 Inches) WIDE TO ALLOW FOR THE SILT FENCE FABRIC TO BE LAID IN THE GROUND AND BACKFILLED WITH COMPACTED MATERIAL.

4. SILT FENCE FABRIC SHOULD BE SECURELY FASTENED TO EACH STEEL OR WOOD SUPPORT POST OR TO WOVEN WIRE , WHICH IS IN TURN ATTACHED TO THE STEEL OR WOOD FENCE POST.

5. INSPECTION SHALL BE MADE WEEKLY OR AFTER EACH RAINFALL EVENT AND REPAIR OR REPLACEMENT SHALL BE MADE PROMPTY AS NEEDED.

6. SILT FENCE SHALL BE REMOVED WHEN THE SITE IS COMPLETELY STABILIZED SO AS NOT TO BLOCK OR IMPEDE STORM FLOW OR DRAINAGE.

7. ACCUMULATED SILT SHALL BE REMOVED WHEN IT REACHES A DEPTH OF 150 mm (6 Inches). THE SILT SHALL BE DISPOSED OF ON AN APPROVED SITE AND IN SUCH A MANNER THAT WILL NOT CONTRIBUTE TO ADDITIONAL SILTATION.

CITY OF AUSTIN WATERSHED PROTECTION DEPARTMENT	SILT FENCE	
9/1/2011 ADOPTED	THE ARCHITECT/ENGINEER ASSUMES RESPONSIBILITY FOR APPROPRIATE USE OF THIS STANDARD.	STANDARD NO. 642S-1

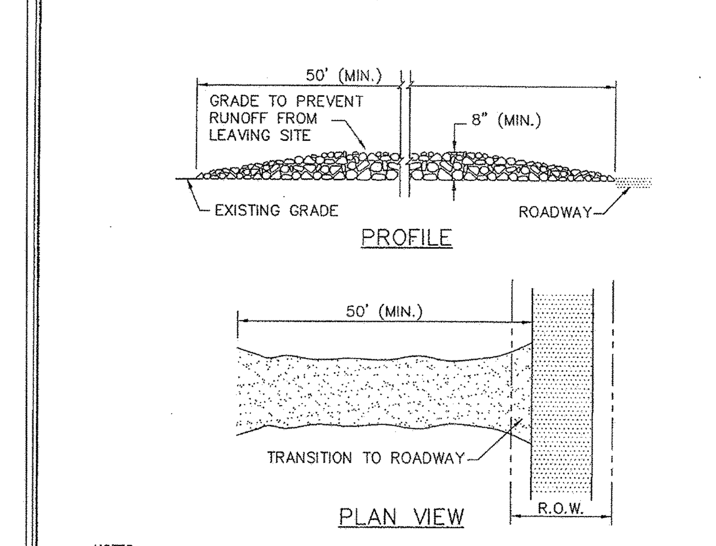

NOTES:
1. STONE SIZE – 3 TO 5 INCH OPEN GRADED ROCK.
2. LENGTH – AS EFFECTIVE, BUT NO LESS THAN 50 FEET.
3. THICKNESS – NOT LESS THAN 8 INCHES.
4. WIDTH – NOT LESS THAN FULL WIDTH OF ALL POINTS OF INGRESS OR EGRESS.
5. WASHING – WHEN NECESSARY, WHEELS SHALL BE CLEANED TO REMOVE SEDIMENT PRIOR TO ENTRANCE ONTO PUBLIC ROADWAY. WHEN WASHING IS REQUIRED, IT SHALL BE DONE ON AN AREA STABILIZED WITH CRUSHED STONE WHICH DRAINS INTO AN APPROVED TRAP OR SEDIMENT BASIN. ALL SEDIMENT SHALL BE PREVENTED FROM ENTERING ANY STORM DRAIN, DITCH OR WATERCOURSE USING APPROVED METHODS.
6. MAINTENANCE – THE ENTRANCE SHALL BE MAINTAINED IN A CONDITION WHICH WILL PREVENT TRACKING OR FLOWING OF SEDIMENT INTO PUBLIC ROADWAYS. THIS MAY REQUIRE PERIODIC TOP DRESSING WITH ADDITIONAL STONE AS CONDITIONS DEMAND, AND REPAIR AND/OR CLEAN-OUT OF ANY MEASURES USED TO TRAP SEDIMENT. ALL SEDIMENT SPILLED, DROPPED, WASHED OR TRACKED ONTO PUBLIC ROADWAY MUST BE REMOVED IMMEDIATELY.
7. DRAINAGE – ENTRANCE MUST BE PROPERLY GRADED OR INCORPORATE A DRAIN SWALE TO PREVENT RUNOFF FROM LEAVING THE CONSTRUCTION SITE.

CITY OF LEANDER, TEXAS		
Scale: NTS	Approved / Date	Drawn by: RPW
STABILIZED CONSTRUCTION ENTRANCE		Detail No. 302-1

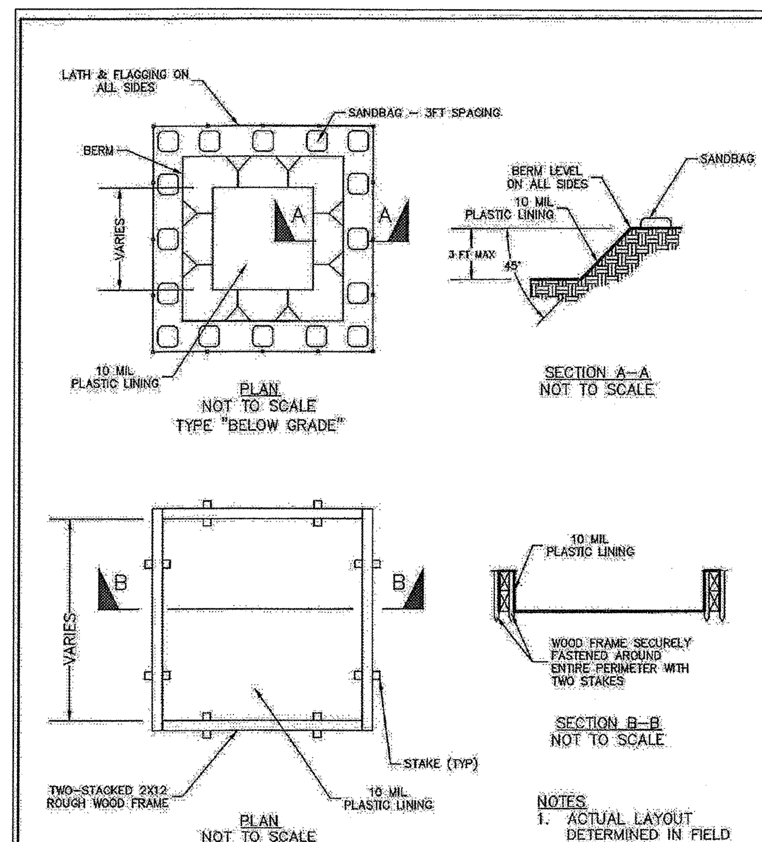

NOTES
1. ACTUAL LAYOUT DETERMINED IN FIELD

WAYNE S. WATTS 88134 LICENSED — 01/30/15
City Of Leander, Texas
303-1
CONCRETE WASHOUT

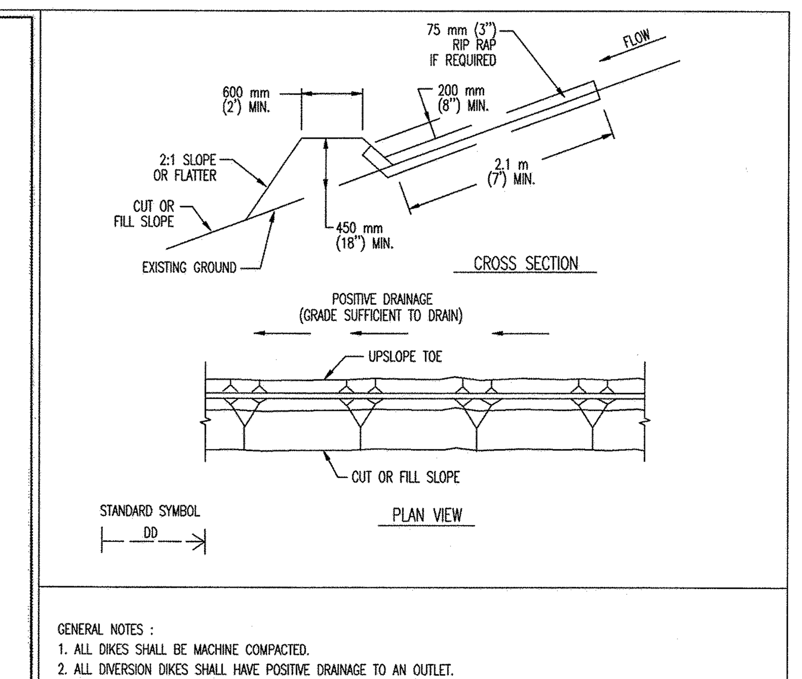

GENERAL NOTES :
1. ALL DIKES SHALL BE MACHINE COMPACTED.
2. ALL DIVERSION DIKES SHALL HAVE POSITIVE DRAINAGE TO AN OUTLET.
3. a. DIVERTED RUNOFF FROM A PROTECTED OR STABILIZED AREA SHALL HAVE ITS OUTLET FLOW DIRECTED TO AN UNDISTURBED STABILIZED AREA OR INTO A LEVEL SPREADER OR GRADE STABILIZATION STRUCTURE.
b. DIVERTED RUNOFF FROM A DISTURBED OR EXPOSED AREA SHALL BE CONVEYED TO A SEDIMENT TRAPPING DEVICE, SUCH AS A ROCK BERM, BRUSH BERM, STONE OUTLET STRUCTURE, SEDIMENT TRAP OR SEDIMENT BASIN OR TO AN AREA PROTECTED BY ANY OF THESE PRACTICES.
4. UNLESS OTHERWISE SPECIFIED, EROSION STABILIZATION SHALL BE OPEN GRADED ROCK 75 TO 125 mm (3 TO 5 inches) IN DIAMETER EMBEDDED IN SOIL SURFACE.
5. INSPECTION SHALL BE CONDUCTED WEEKLY OR AFTER EACH RAINFALL EVENT.

CITY OF AUSTIN WATERSHED PROTECTION DEPARTMENT	DIVERSION DIKE
RECORD COPY SIGNED BY J. PATRICK MURPHY 3/27/00 ADOPTED	THE ARCHITECT/ENGINEER ASSUMES RESPONSIBILITY FOR APPROPRIATE USE OF THIS STANDARD.

GeoSolutions, Inc. — Product Data Sheet — GeoCurve Inlet Filter

The GeoCurve Inlet Filter is a stormwater filter for placement into a stormwater curb inlet for the purpose of capturing debris and sediment that is transported by stormwater runoff. The device is comprised of a filter media (woven monofilament filter fabric) affixed to the lower portion of a "C" shaped 12 gauge welded wire frame (2" x 4" openings) with an upper retention flange. The device effectively filters stormwater, can easily be removed for maintenance and cleaning and incorporates an overflow window for heavy storm events.

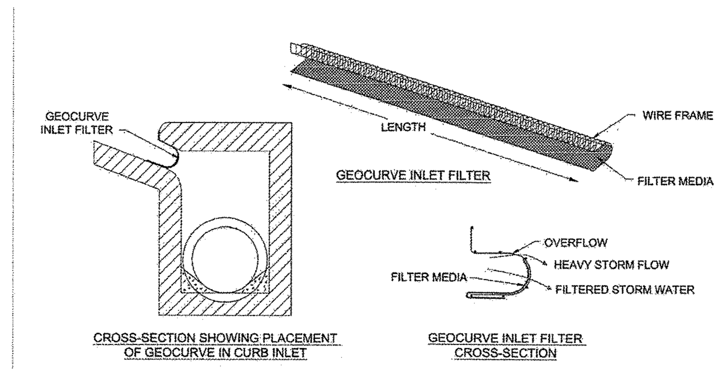

FILTER MEDIA PROPERTIES: Mono-filament Woven Filter Fabric

PROPERTY	ASTM TEST METHOD	VALUE	C.O.A. REQ'T
Fabric Weight	D 3776	4.5 oz/sy	3 oz/sy
Grab Tensile Strength	D 4632	170 lbs	----
Mullen Burst Strength	D 3786	410 lbs/sq in	120 lbs/sq in
UV Stability	D 4355	80 %	70 %
Water Flow Rate	D 4491	325 gal/min/sf	275 gal/min/sf

GeoSolutions, Inc. 4417 Burleson Road Austin, Texas 78744 512-330-0796

FOR CITY OF LEANDER USE

20-PICP-011

DESIGNED BY: LAW	DRAFTED BY: ZHL & CMC

REVISION	DATE
INITIAL SUBMITTAL	03.24.20
UPDATE #1 SUBMITTAL	05.18.20
UPDATE #2 SUBMITTAL	07.28.20

Carlson, Brigance & Doering, Inc.
Civil Engineering ◆ Surveying
FIRM ID #F3791
Main Office
5501 West William Cannon Dr.
Austin, Texas 78749
North Office
12129 RR 620 N., Ste. 600
Austin, Texas 78750
Phone No. (512) 280-5160 Fax No. (512) 280-5165

SHEET NAME: EROSION CONTROL DETAILS & NOTES

JOB NAME: HOMESTEAD PHASE 3

PROJECT: STREET, DRAINAGE, WATER, AND WASTEWATER IMPROVEMENTS

8/10/2020

STATE OF TEXAS — LEE A. WHITED — 102471 — LICENSED PROFESSIONAL ENGINEER
CARLSON, BRIGANCE & DOERING, INC. ID# F3791

DATE: NOVEMBER 2019

JOB NUMBER: 5172

SHEET: 10 OF 61

SHEET NO. 10

FILE PATH:J:\AC3D\5172\dwg\5172-EROSION.dwg - Aug 10, 2020 - 4:21pm

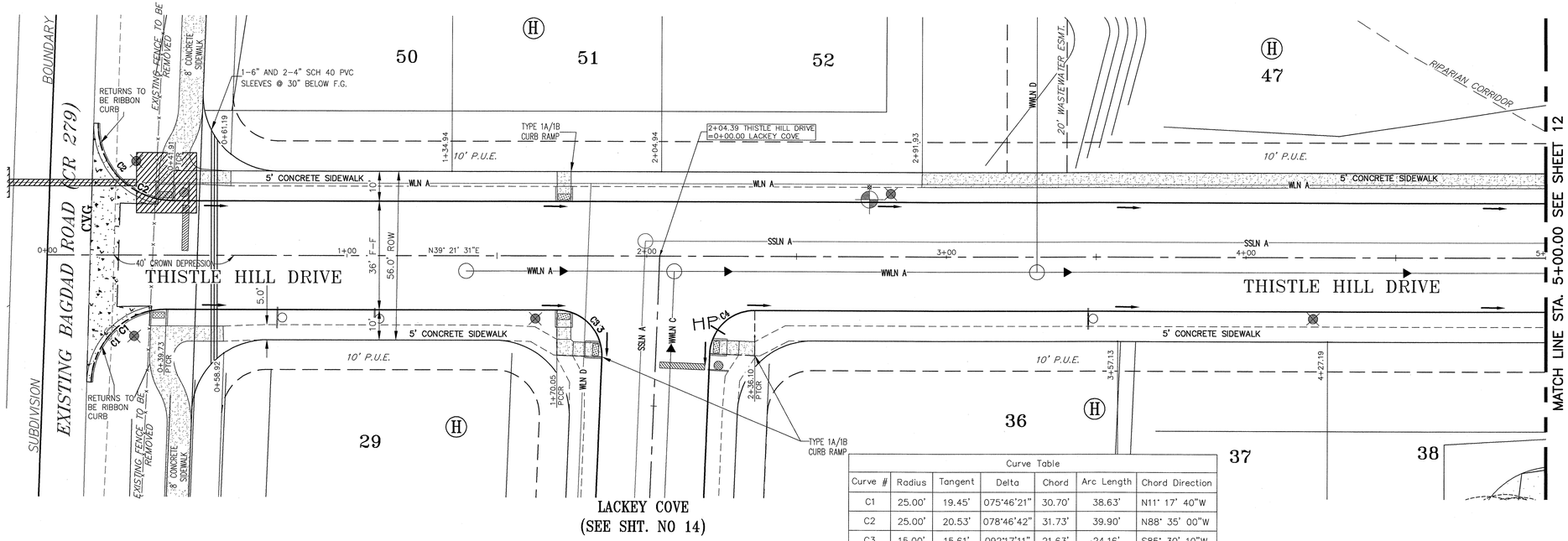

Curve Table						
Curve #	Radius	Tangent	Delta	Chord	Arc Length	Chord Direction
C1	25.00'	19.45'	075°46'21"	30.70'	38.63'	N11° 17' 40"W
C2	25.00'	20.53'	078°46'42"	31.73'	39.90'	N88° 35' 00"W
C3	15.00'	15.61'	092°17'11"	21.63'	24.16'	S85° 30' 10"W
C4	15.00'	14.41'	087°42'49"	20.79'	22.96'	S04° 29' 50"E

LEGEND

- DASHED SIDEWALK = TO BE BUILT BY HOME BUILDER
- SOLID SIDEWALK = TO BE BUILT WITH THIS CONTRACT
- STREET LIGHT
- SIGN
- STOP SIGN
- STOP BAR
- AVG — ASPHALT VALLEY GUTTER
- CVG — CONCRETE VALLEY GUTTER
- LP/HP — LOWPOINT/HIGHPOINT
- FLOW ARROW
- C3 — CURVE NUMBER

SCALE: 1" = 20'

PROFILE SCALE
HORIZ: 1" = 20'
VERT: 1" = 2'

NATURAL GROUND RT. — NATURAL GROUND LT.
NATURAL GROUND ℄ — PROPOSED T/C LT. & RT.

THISTLE HILL DRIVE

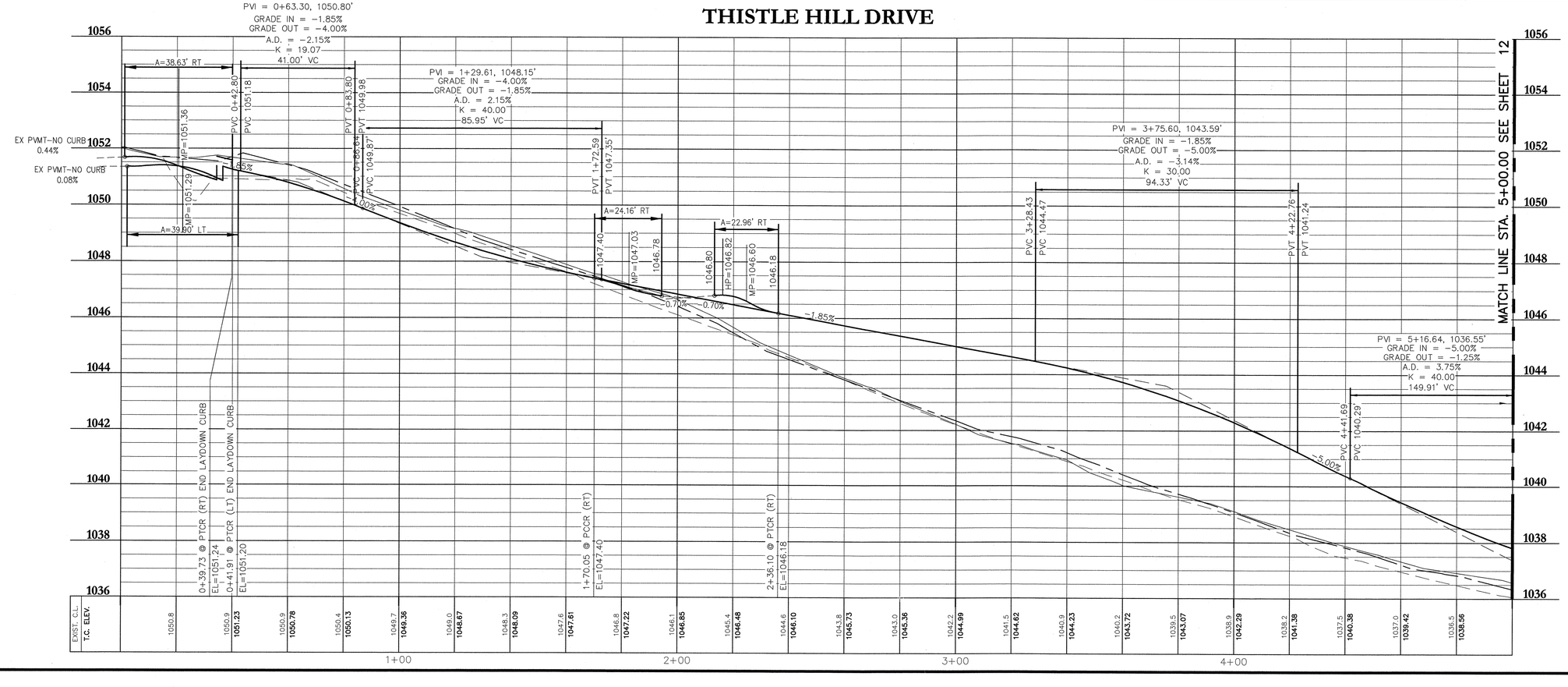

FOR CITY OF LEANDER USE

20-PICP-011

DESIGNED BY:	DRAFTED BY:
LAW	ZHL & CMC

REVISION	DATE
INITIAL SUBMITTAL	03.24.20
UPDATE #1 SUBMITTAL	05.18.20
UPDATE #2 SUBMITTAL	07.28.20

Carlson, Brigance & Doering, Inc.
Civil Engineering ◆ Surveying
Main Office: 5501 West William Cannon Dr. Austin, Texas 78749
North Office: FIRM ID #F3791 12129 RR 620 N., Ste. 600 Austin, Texas 78750
Phone No. (512) 280-5160 Fax No. (512) 280-5165

SHEET NAME: THISTLE HILL DRIVE (0+00 TO 5+00)

JOB NAME: HOMESTEAD PHASE 3

PROJECT: STREET, DRAINAGE, WATER, AND WASTEWATER IMPROVEMENTS

8/10/2020

STATE OF TEXAS — LEE A. WHITED — 102471 — LICENSED PROFESSIONAL ENGINEER — CARLSON, BRIGANCE & DOERING, INC. ID# F3791

DATE: NOVEMBER 2019

JOB NUMBER: 5172

SHEET: 11 OF 61

SHEET NO.: 11

OCE-STREET.CTB

FILE PATH:J:\ACAD\5172\dwg\5172-STREETS.dwg - Aug 10, 2020 - 8:17pm

OCE-STREET.CTB

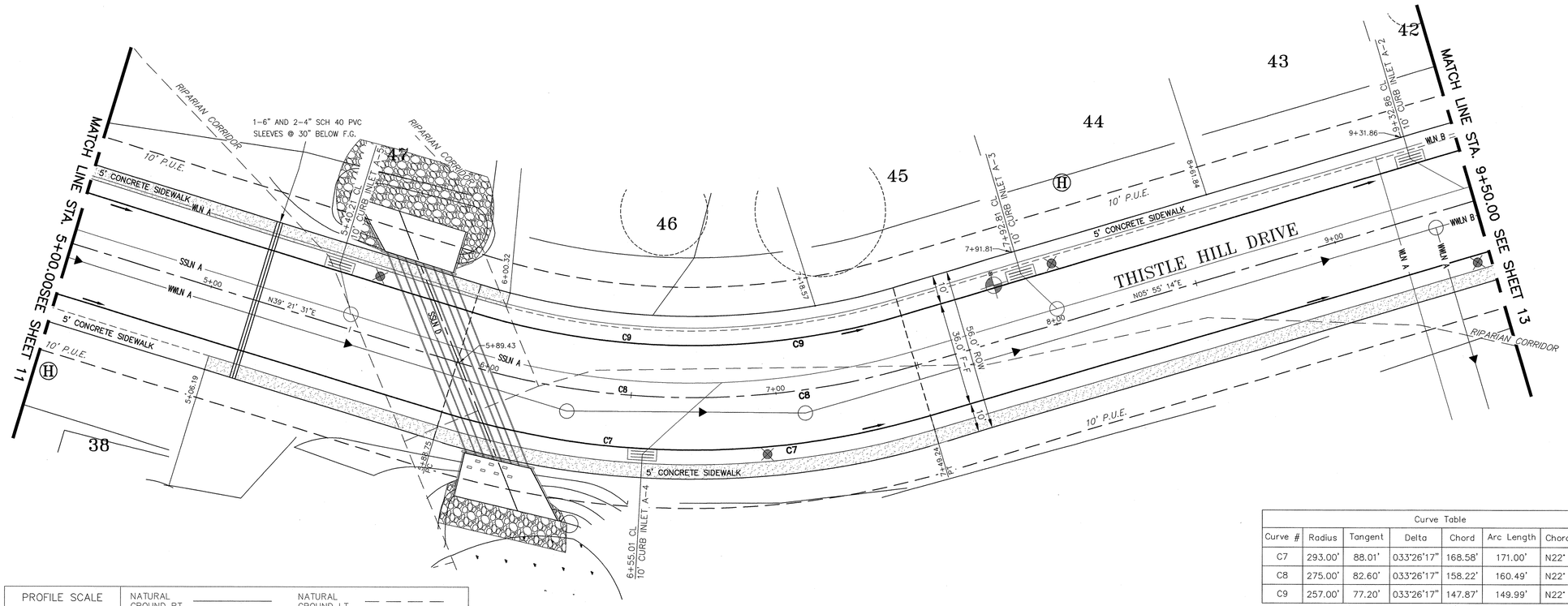

Curve Table						
Curve #	Radius	Tangent	Delta	Chord	Arc Length	Chord Direction
C7	293.00'	88.01'	033°26'17"	168.58'	171.00'	N22° 38' 20"E
C8	275.00'	82.60'	033°26'17"	158.22'	160.49'	N22° 38' 20"E
C9	257.00'	77.20'	033°26'17"	147.87'	149.99'	N22° 38' 20"E

LEGEND

- DASHED SIDEWALK = TO BE BUILT BY HOME BUILDER
- SOLID SIDEWALK = TO BE BUILT WITH THIS CONTRACT
- STREET LIGHT
- SIGN
- STOP SIGN
- STOP BAR
- AVG — ASPHALT VALLEY GUTTER
- CVG — CONCRETE VALLEY GUTTER
- LP/HP — LOWPOINT/HIGHPOINT
- FLOW ARROW
- C9 — CURVE NUMBER

PROFILE SCALE
HORIZ: 1" = 20'
VERT: 1" = 2'

NATURAL GROUND RT. ———
NATURAL GROUND ℄ — — — —
NATURAL GROUND LT. — — — —
PROPOSED T/C LT. & RT. ———

SCALE: 1" = 20'

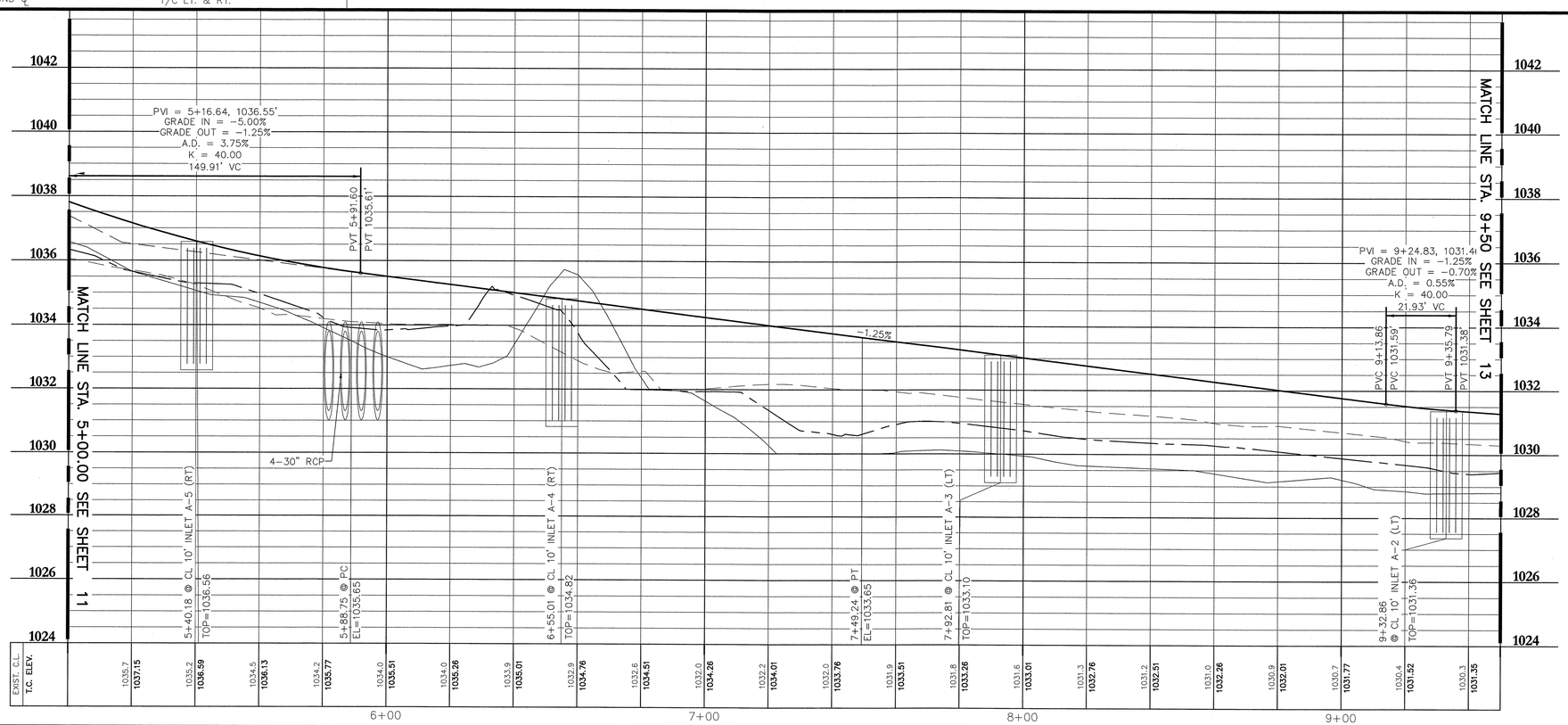

FOR CITY OF LEANDER USE

20-PICP-011

DESIGNED BY:	DRAFTED BY:
LAW	ZHL & CMC

REVISION	DATE
INITIAL SUBMITTAL	03.24.20
UPDATE #1 SUBMITTAL	05.18.20
UPDATE #2 SUBMITTAL	07.28.20

Carlson, Brigance & Doering, Inc.
Civil Engineering ◆ Surveying
FIRM ID #F3791
Main Office: 5501 West William Cannon Dr. Austin, Texas 78749 Phone No. (512) 280-5160
North Office: 12129 RR 620 N., Ste. 600 Austin, Texas 78750 Fax No. (512) 280-5165

SHEET NAME: THISTLE HILL DRIVE (5+00 TO 9+50)

JOB NAME: HOMESTEAD PHASE 3

PROJECT: STREET, DRAINAGE, WATER, AND WASTEWATER IMPROVEMENTS

8/10/2020

STATE OF TEXAS — LEE A. WHITED 102471 — LICENSED PROFESSIONAL ENGINEER — CARLSON, BRIGANCE & DOERING, INC. ID# F3791

DATE	NOVEMBER 2019
JOB NUMBER	5172
SHEET	12 OF 61
SHEET NO.	12

FILE PATH:J:\AC20\5172\dwg\5172-STREETS.dwg - Aug 10, 2020 - 6:16pm

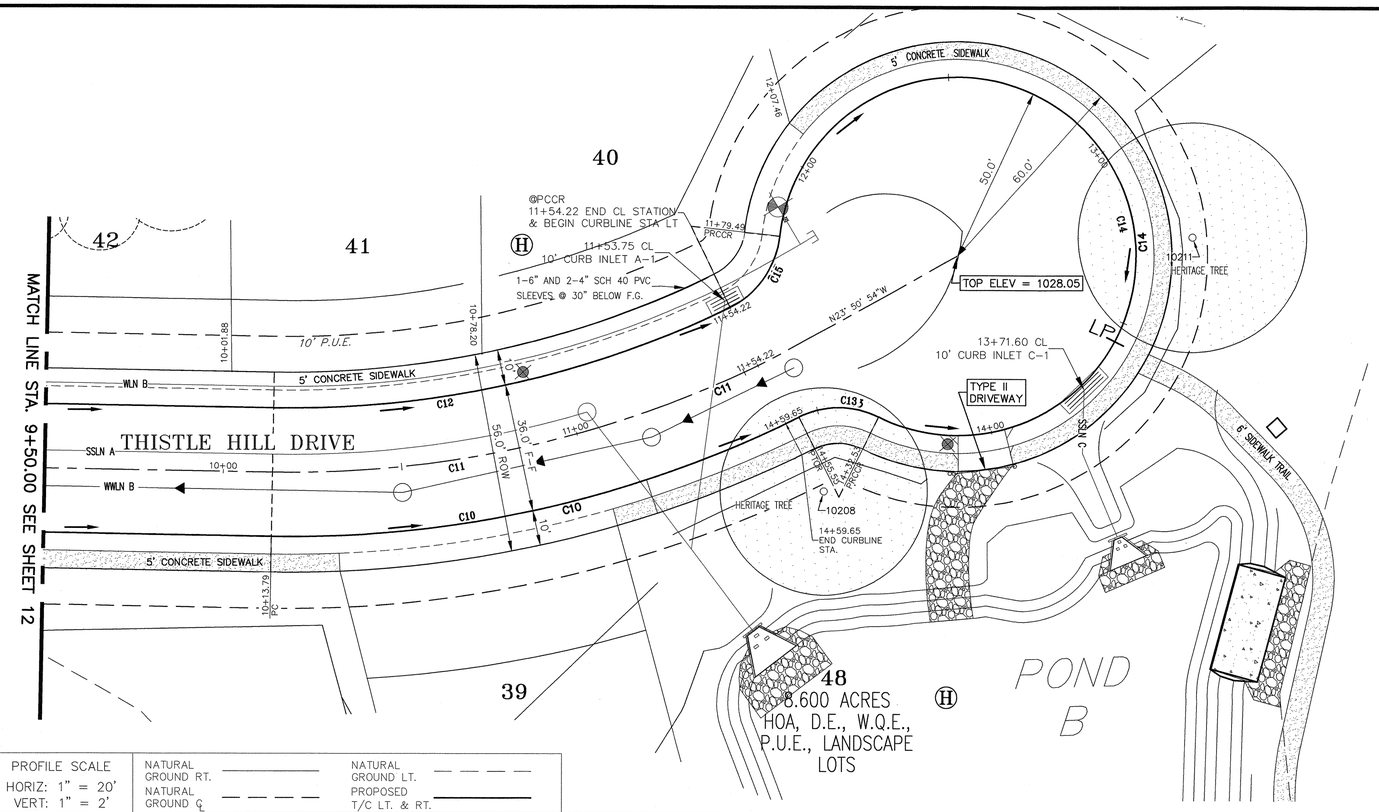

PROFILE SCALE		
HORIZ: 1" = 20'	NATURAL GROUND RT.	NATURAL GROUND LT.
VERT: 1" = 2'	NATURAL GROUND ℄	PROPOSED T/C LT. & RT.

LEGEND

- DASHED SIDEWALK = TO BE BUILT BY HOME BUILDER
- SOLID SIDEWALK = TO BE BUILT WITH THIS CONTRACT
- STREET LIGHT
- SIGN
- STOP SIGN
- STOP BAR
- AVG — ASPHALT VALLEY GUTTER
- CVG — CONCRETE VALLEY GUTTER
- LP/HP — LOWPOINT/HIGHPOINT
- FLOW ARROW
- C3 — CURVE NUMBER
- 50000 — HERITAGE TREE

Curve Table

Curve #	Radius	Tangent	Delta	Chord	Arc Length	Chord Direction
C10	318.00'	77.99'	027°33'33"	151.49'	152.96'	N07° 51' 30"W
C11	300.00'	73.57'	027°33'33"	142.91'	144.30'	N07° 51' 30"W
C12	282.00'	67.24'	026°49'14"	130.80'	132.01'	N07° 29' 20"W
C13	25.00'	12.40'	052°46'19"	22.22'	23.03'	S04° 44' 50"W
C14	50.00'	35.04'	289°57'17"	57.39'	253.03'	S66° 09' 20"W
C15	25.00'	13.84'	057°55'17"	24.21'	25.27'	N49° 51' 40"W

0 20' 40'

SCALE: 1" = 20'

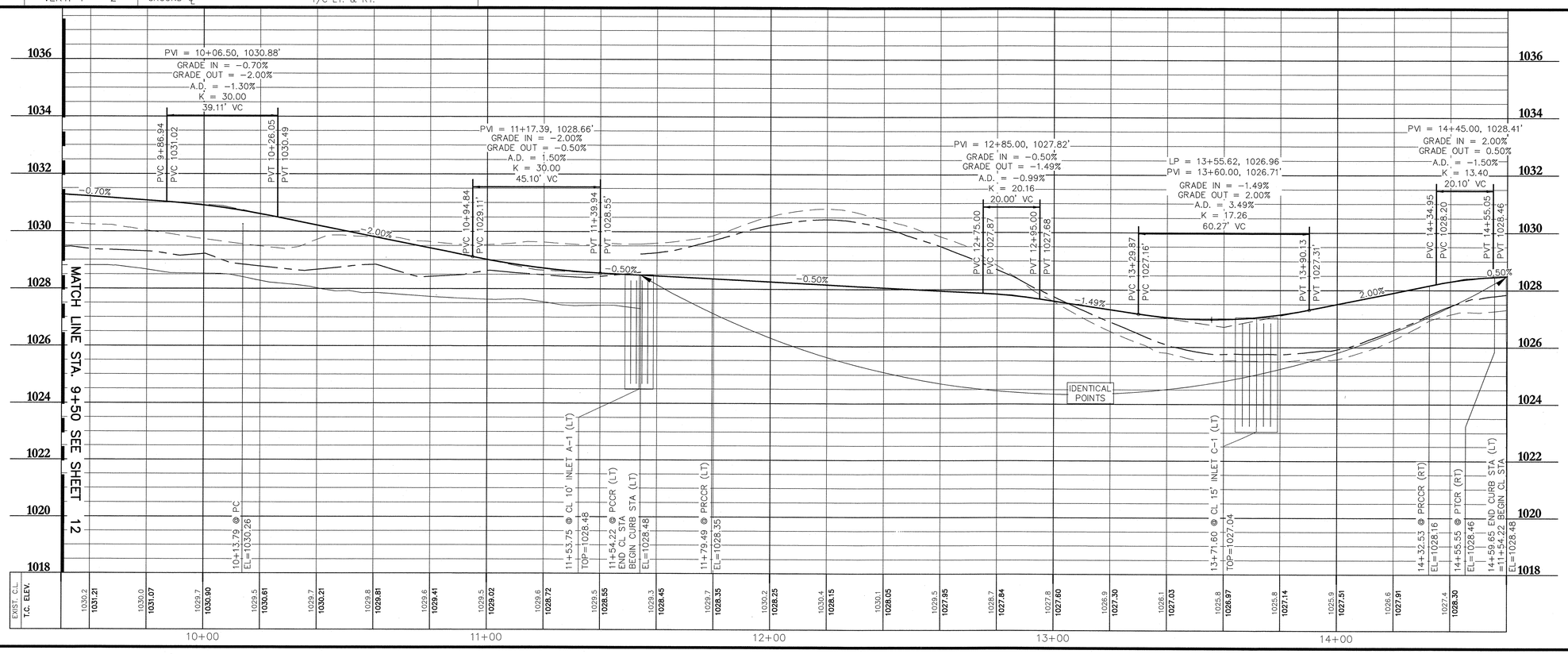

FOR CITY OF LEANDER USE

20-PICP-011

DESIGNED BY:	DRAFTED BY:
LAW	ZHL & CMC

REVISION	DATE
INITIAL SUBMITTAL	03.24.20
UPDATE #1 SUBMITTAL	05.18.20
UPDATE #2 SUBMITTAL	07.28.20

Carlson, Brigance & Doering, Inc.
Civil Engineering ◆ Surveying
FIRM ID #F3791
Main Office: 5501 West William Cannon Dr. Austin, Texas 78749 Phone No. (512) 280-5160
North Office: 12129 RR 620 N., Ste. 600 Austin, Texas 78750 Fax No. (512) 280-5165

SHEET NAME: THISTLE HILL DRIVE (9+50 TO END)

JOB NAME: HOMESTEAD PHASE 3

PROJECT: STREET, DRAINAGE, WATER, AND WASTEWATER IMPROVEMENTS

8/10/2020

STATE OF TEXAS — LEE A. WHITED — 102471 — LICENSED PROFESSIONAL ENGINEER — CARLSON, BRIGANCE & DOERING, INC. ID# F3791

DATE	NOVEMBER 2019
JOB NUMBER	5172
SHEET	13 OF 61
SHEET NO.	13

OCE-STREET.CTB

FILE PATH:J:\AC30\172\dwg\5172-STREETS.dwg - Aug 10, 2020 - 6:16pm

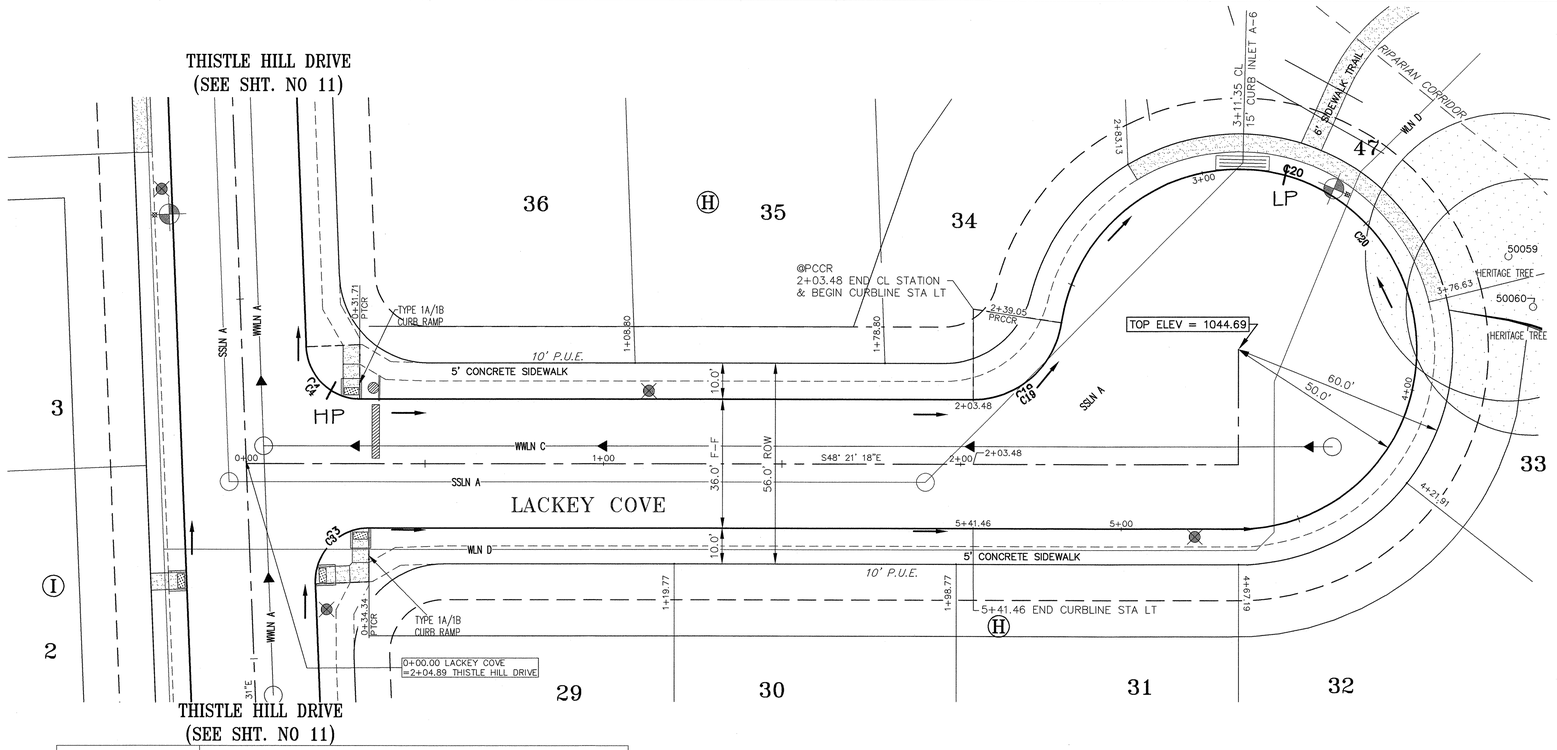

LEGEND

- DASHED SIDEWALK = TO BE BUILT BY HOME BUILDER
- SOLID SIDEWALK = TO BE BUILT WITH THIS CONTRACT
- STREET LIGHT
- SIGN
- STOP SIGN
- STOP BAR
- AVG — ASPHALT VALLEY GUTTER
- CVG — CONCRETE VALLEY GUTTER
- LP/HP — LOWPOINT/HIGHPOINT
- FLOW ARROW
- C3 — CURVE NUMBER
- 50000 — HERITAGE TREE

Curve Table						
Curve #	Radius	Tangent	Delta	Chord	Arc Length	Chord Direction
C3	15.00'	15.61'	092°17'11"	21.63'	24.16'	S85° 30' 10"W
C4	15.00'	14.41'	087°42'49"	20.79'	22.96'	S04° 29' 50"E
C19	25.00'	21.55'	081°31'46"	32.65'	35.57'	S89° 07' 10"E
C20	50.00'	55.50'	264°02'01"	74.29'	230.41'	N02° 08' 00"E

0 20' 40'

SCALE: 1" = 20'

PROFILE SCALE		
HORIZ: 1" = 20'	NATURAL GROUND RT.	NATURAL GROUND LT.
VERT: 1" = 2'	NATURAL GROUND ℄	PROPOSED T/C LT. & RT.

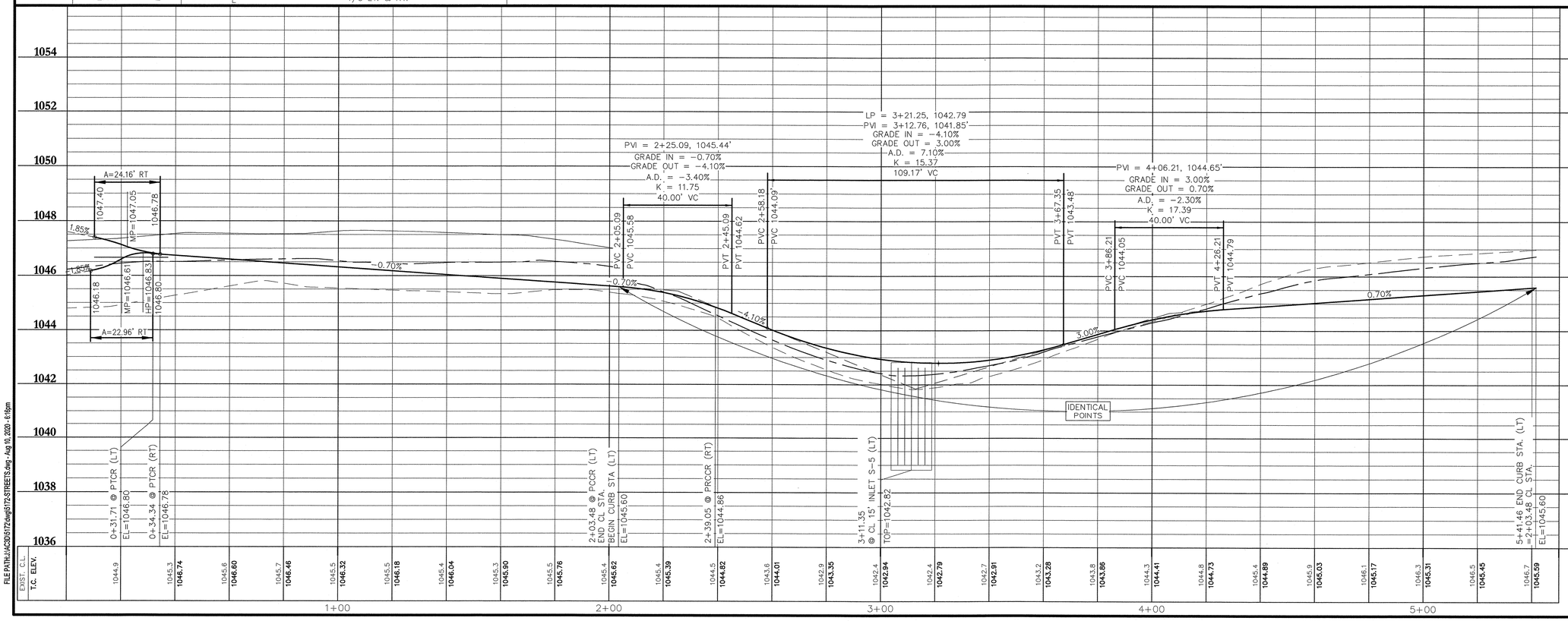

FOR CITY OF LEANDER USE

20-PICP-011

DESIGNED BY:	DRAFTED BY:
LAW	ZHL & CMC

REVISION	DATE
INITIAL SUBMITTAL	03.24.20
UPDATE #1 SUBMITTAL	05.18.20
UPDATE #2 SUBMITTAL	07.28.20

Carlson, Brigance & Doering, Inc.
Civil Engineering ◆ Surveying
FIRM ID #F3791
Main Office: 5501 West William Cannon Dr. Austin, Texas 78749
North Office: 12129 RR 620 N., Ste. 600 Austin, Texas 78750
Phone No. (512) 280-5160 Fax No. (512) 280-5165

SHEET NAME: LACKEY COVE (0+00 TO END)

JOB NAME: HOMESTEAD PHASE 3

PROJECT: STREET, DRAINAGE, WATER, AND WASTEWATER IMPROVEMENTS

8/10/2020

STATE OF TEXAS
LEE A. WHITED
102471
PROFESSIONAL ENGINEER
CARLSON, BRIGANCE & DOERING, INC.
ID# F3791

DATE	NOVEMBER 2019
JOB NUMBER	5172
SHEET	14 OF 61
SHEET NO.	14

OCE-STREET.CTB

FILE PATH:J:\ACD\5172\dwg\5172-STREETS.dwg - Aug 10, 2020 - 8:16pm

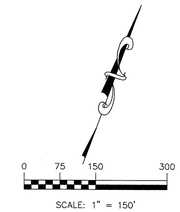

LEGEND

- PROPERTY BOUNDARY
- DRAINAGE BOUNDARY LINE
- (XX) DRAINAGE AREA LABEL
- 940 EXISTING CONTOUR 10'
- EXISTING CONTOUR 2'
- FLOW ARROW

FOR CITY OF LEANDER USE

20-PICP-011

DESIGNED BY: LAW	DRAFTED BY: ZHL & CMC

REVISION	DATE
INITIAL SUBMITTAL	03.24.20
UPDATE #1 SUBMITTAL	05.18.20
UPDATE #2 SUBMITTAL	07.28.20

Carlson, Brigance & Doering, Inc.
Civil Engineering ◆ Surveying
FIRM ID #F3791
Main Office
5501 West William Cannon Dr.
Austin, Texas 78749
Phone No. (512) 280-5160
North Office
12129 RR 620 N., Ste. 600
Austin, Texas 78750
Fax No. (512) 280-5165

SHEET NAME: OVERALL DRAINAGE PLAN

JOB NAME: HOMESTEAD PHASE 3

PROJECT: STREET, DRAINAGE, WATER, AND WASTEWATER IMPROVEMENTS

8/10/2020

STATE OF TEXAS
LEE A. WHITED
102471
PROFESSIONAL ENGINEER
CARLSON, BRIGANCE & DOERING, INC.
ID# F3791

DATE	NOVEMBER 2019
JOB NUMBER	5172
SHEET	15 OF 61
SHEET NO.	15

FILE PATH:J:\ACSD\5172\dwg\5172-DRAINAGE PLANS AND CALCS.dwg - Aug 10, 2020 - 4:21pm

25 YR INLET FLOWS

INLET NUMBER	DRAINAGE AREA NO.	Q (CFS)	Q SPILL (CFS)	Q PASS (CFS)	Q ADD (CFS)	Q TOTAL (CFS)	Q REQUIRED (CFS)	INLET TYPE	S_L FT/FT	PAVEMENT WIDTH (ft)	PONDED WIDTH (FT)	D DEPTH AT CURB (ft)	L INLET LENGTH (FT)	Qs PVMT (cfs)	Qw GUTTER(cfs)	E0 Q_w/Q_{total}	Se EQUV. SLOPE (ft/ft)	Lt 100% INTERCEPT LENGTH	E INLET EFFICIENCY	Qi INLET CAPACITY (cfs)	Comments
A-1	C6	4.00	0.00	0.26	0.44	4.00	3.74	10' INLET	0.005	28	9.71	N/A	10	2.43	1.57	0.39	0.071	12.77	0.94	3.74	PASS to C-1
A-2	C5	3.90	0.00	0.44	1.81	3.90	3.46	10' INLET	0.007	28	8.59	N/A	10	2.24	1.66	0.43	0.076	13.46	0.91	3.56	PASS to A-1
A-3	C4	6.20	0.00	1.81	0.68	6.20	4.39	10' INLET	0.0125	28	9.58	N/A	10	3.75	2.45	0.39	0.072	20.13	0.71	4.40	PASS to A-2
A-4	C3	5.60	0.00	1.45	0.00	5.60	4.15	10' INLET	0.0125	28	8.97	N/A	10	3.29	2.31	0.41	0.074	18.91	0.74	4.15	PASS to C-1
A-5	C2	3.50	0.00	0.68	0.00	3.50	2.82	10' INLET	0.0254	28	5.90	N/A	10	1.42	2.08	0.59	0.098	16.26	0.82	2.87	PASS to A-3
A-6	C1	9.30	0.00	0.00	0.00	9.30	9.30	L.P. INLET	0.006	28	N/A	0.350	15	N/A	N/A	N/A	N/A	N/A	N/A	9.30	
C-1	C7	5.90	0.00	0.00	1.71	5.90	5.90	L.P. INLET	0.013	28	N/A	0.258	15	N/A	N/A	N/A	N/A	N/A	N/A	5.90	

100 YR INLET FLOWS

INLET NUMBER	DRAINAGE AREA NO.	Q (CFS)	Q SPILL (CFS)	Q PASS (CFS)	Q ADD (CFS)	Q TOTAL (CFS)	Q REQUIRED (CFS)	INLET TYPE	S_L FT/FT	PAVEMENT WIDTH (ft)	PONDED WIDTH (FT)	D DEPTH AT CURB (ft)	L INLET LENGTH (FT)	Qs PVMT (cfs)	Qw GUTTER(cfs)	E0 Q_w/Q_{total}	Se EQUV. SLOPE (ft/ft)	Lt 100% INTERCEPT LENGTH	E INLET EFFICIENCY	Qi INLET CAPACITY (cfs)	Comments
A-1	C6	6.10	0.00	0.26	0.34	4.00	3.74	10' INLET	0.005	28	9.71	N/A	10	2.43	1.57	0.39	0.071	12.77	0.94	3.74	PASS to C-1
A-2	C5	5.90	0.00	0.34	1.81	3.90	3.56	10' INLET	0.007	28	8.59	N/A	10	2.24	1.66	0.43	0.076	13.46	0.91	3.56	PASS to A-1
A-3	C4	9.40	0.00	1.81	1.67	6.20	4.39	10' INLET	0.0125	28	9.58	N/A	10	3.75	2.45	0.39	0.072	20.13	0.71	4.40	PASS to A-2
A-4	C3	8.60	0.05	3.31	0.00	8.60	5.24	10' INLET	0.0125	28	13.80	N/A	10	5.67	2.93	0.34	0.065	24.58	0.61	5.24	PASS to C-1
A-5	C2	5.30	0.00	1.67	0.00	5.30	3.63	10' INLET	0.0254	28	7.17	N/A	10	2.67	2.63	0.50	0.085	21.06	0.69	3.64	PASS to A-3
A-6	C1	14.00	0.00	0.00	0.00	14.00	14.00	L.P. INLET	0.03	28	N/A	0.459	15	N/A	N/A	N/A	N/A	N/A	N/A	14.00	
C-1	C7	8.80	0.00	0.00	3.57	5.90	5.90	L.P. INLET	0.02	28	N/A	0.258	15	N/A	N/A	N/A	N/A	N/A	N/A	5.90	

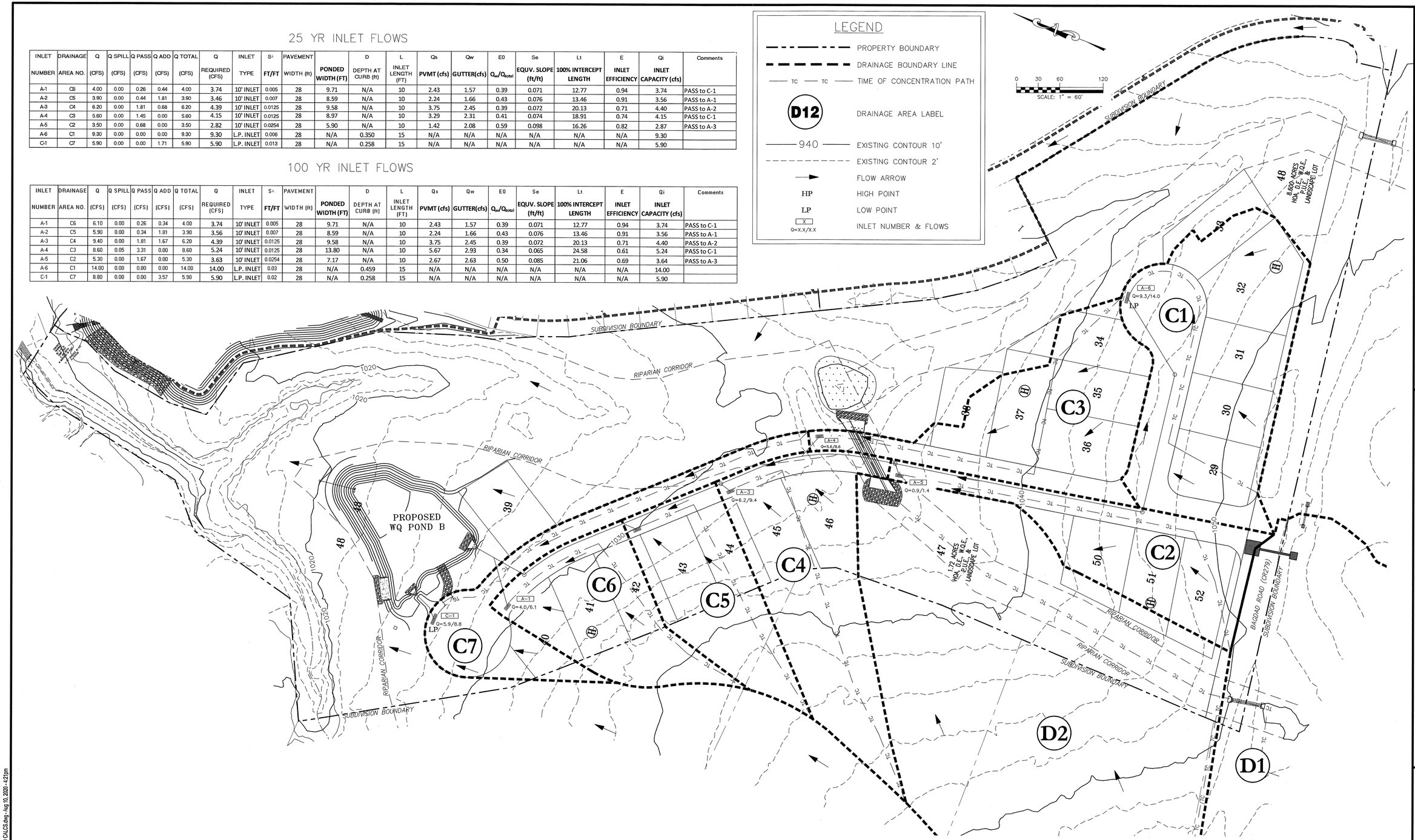

DRAINAGE CALCULATIONS

Area No.	Area (Acre)	T_C (Min.)	Perv. (%)	Imperv. (%)	C 25	C 100	I_{25} In/Hr	I_{100} In/Hr	Q_{25} CFS	Q_{100} CFS
C1	1.86	16	44	56	0.65	0.73	7.62	10.22	9.3	14.0
C2	1.01	31	46	54	0.64	0.72	5.36	7.23	3.5	5.3
C3	1.29	17	48	52	0.59	0.67	7.43	9.96	5.6	8.6
C4	1.51	16	68	32	0.54	0.62	7.57	10.14	6.2	9.4
C5	0.85	12	69	31	0.53	0.61	8.55	11.44	3.9	5.9
C6	0.86	14	61	39	0.57	0.65	8.09	10.83	4.0	6.1
C7	0.72	5	29	71	0.72	0.81	11.36	15.15	5.9	8.8
D1	39.93	65	61	39	0.51	0.59	3.41	4.66	69.6	109.5
D2	5.79	12	100	0	0.39	0.46	8.62	11.53	19.5	30.7

COMBO FLOWS

AREAS COMBINED	T_C (Min.)	C_{25}*A	C_{100}*A	I_{25} In/Hr	I_{100} In/Hr	Q_{25} CFS	Q_{100} CFS
C1-C2	31	1.86	2.10	5.40	7.28	10.1	15.3
C1-C3	31	2.62	2.96	5.40	7.28	14.1	21.5
C1-C4	31	3.44	3.89	5.40	7.28	18.5	28.3
C1-C5	31	3.89	4.41	5.40	7.28	21.0	32.1
C1-C6	31	4.39	4.97	5.40	7.28	23.7	36.2
C1-C7	31	4.91	5.55	5.40	7.28	26.5	40.4
D1-D2	65	22.66	26.17	3.41	4.65	77.3	121.8

FOR CITY OF LEANDER USE

20-PICP-011

DESIGNED BY: LAW

DRAFTED BY: ZHL & CMC

REVISION	DATE
INITIAL SUBMITTAL	03.24.20
UPDATE #1 SUBMITTAL	05.18.20
UPDATE #2 SUBMITTAL	07.28.20

Carlson, Brigance & Doering, Inc.
Civil Engineering ◆ Surveying
FIRM ID #F3791
Main Office: 5501 West William Cannon Dr. Austin, Texas 78749 Phone No. (512) 280-5160
North Office: 12129 RR 620 N., Ste. 600 Austin, Texas 78750 Fax No. (512) 280-5165

SHEET NAME: DRAINAGE AREA AND CALCULATIONS PLAN

JOB NAME: HOMESTEAD PHASE 3

PROJECT: STREET, DRAINAGE, WATER, AND WASTEWATER IMPROVEMENTS

8/10/2020

STATE OF TEXAS
LEE A. WHITED
102471
LICENSED PROFESSIONAL ENGINEER
CARLSON, BRIGANCE & DOERING, INC.
ID# F3791

DATE NOVEMBER 2019

JOB NUMBER 5172

SHEET 16 OF 61

SHEET NO. 16

FILE PATH:J:\ACD\5172\dwg\5172-DRAINAGE PLANS AND CALCS.dwg - Aug 10, 2020 - 4:21pm

EXPOSED CONCRETE NOTE:
ALL EXPOSED CONCRETE THAT IS VISIBLE IS REQUIRED TO BE CLAD IN STONE INCLUDING BUT NOT LIMITED TO LEDGESTONE, FIELDSTONE, CAST STONE, OR OTHER DECORATIVE MATERIALS AS APPROVED BY THE DIRECTOR OF PLANNING. ALL OTHER EXPOSED CONCRETE IS REQUIRED TO BE CLAD IN STONE AS LISTED ABOVE OR TEXTURED AND TINTED IN EARTHEN COLORS.

FOR CITY OF LEANDER USE

20-PICP-011

DESIGNED BY:	DRAFTED BY:
LAW	ZHL & CMC

REVISION	DATE
INITIAL SUBMITTAL	03.24.20
UPDATE #1 SUBMITTAL	05.18.20
UPDATE #2 SUBMITTAL	07.28.20

Carlson, Brigance & Doering, Inc.
Civil Engineering ◆ Surveying
FIRM ID #F3791
Main Office
5501 West William Cannon Dr.
Austin, Texas 78749
Phone No. (512) 280-5160
North Office
12129 RR 620 N., Ste. 600
Austin, Texas 78750
Fax No. (512) 280-5165

SHEET NAME: AREA GRADING PLAN

JOB NAME: HOMESTEAD PHASE 3

PROJECT: STREET, DRAINAGE, WATER, AND WASTEWATER IMPROVEMENTS

8/10/2020

STATE OF TEXAS
LEE A. WHITED
102471
PROFESSIONAL ENGINEER
CARLSON, BRIGANCE & DOERING, INC.
ID# F3791

DATE	NOVEMBER 2019
JOB NUMBER	5172
SHEET	17 OF 61
SHEET NO.	17

FILE PATH: J:\ACSDWG\5172\dwg\5172-GRADING PLAN.dwg - Aug 10, 2020 - 4:22pm

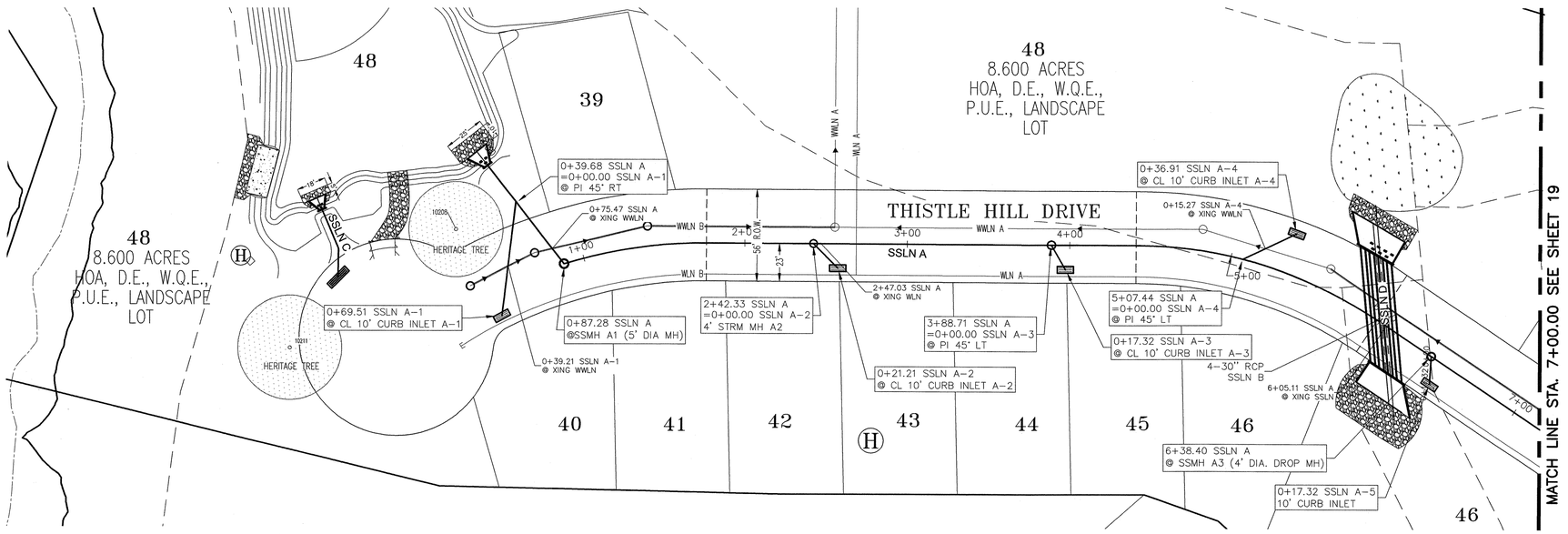

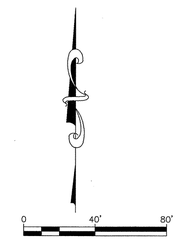

SCALE: 1" = 40'

PROFILE SCALE
HORIZ. 1" = 40'
VERT. 1" = 4'

PROPOSED STORM SEWER LINE A (0+ 00 TO 7+ 00)

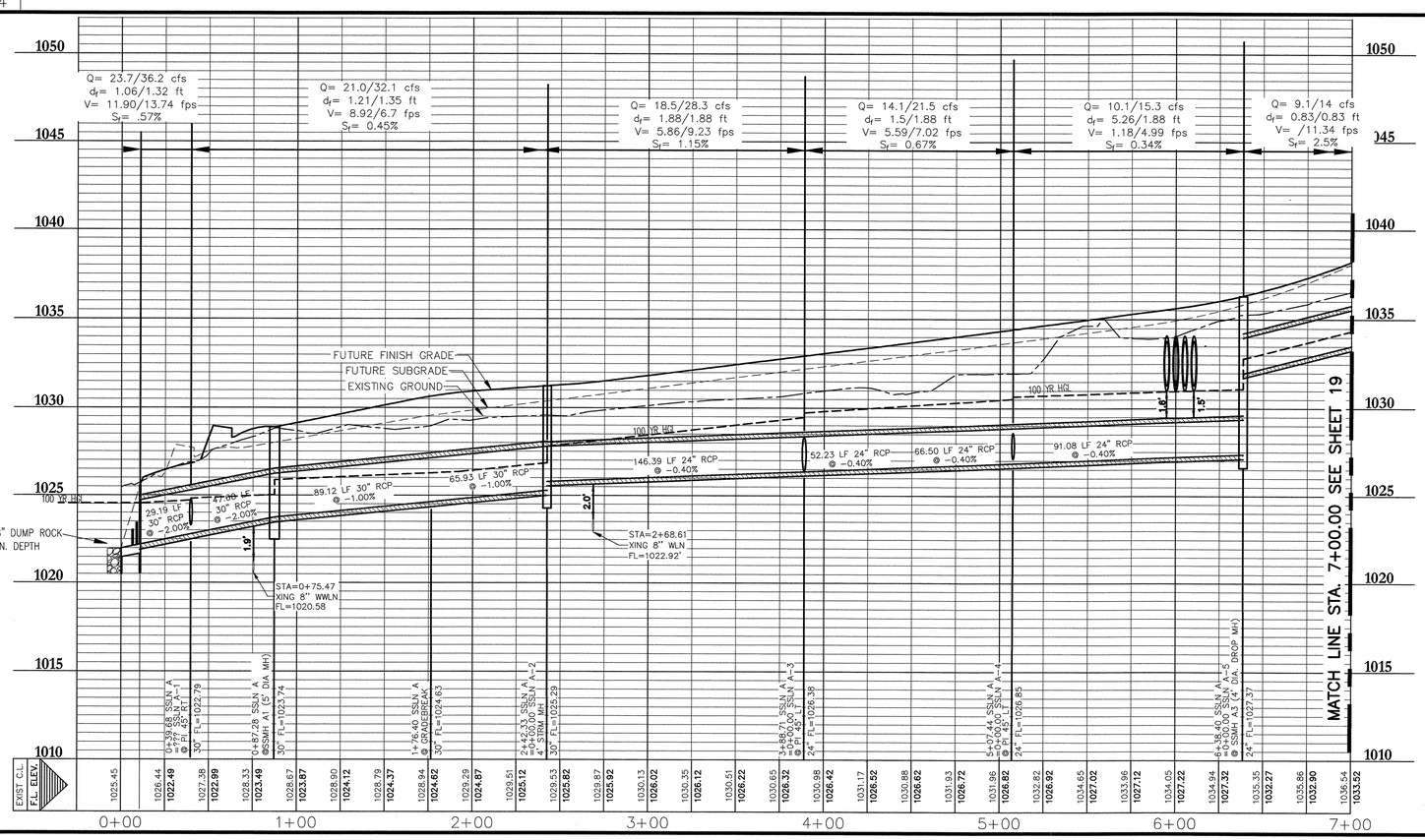

NOTES: (THESE NOTES APPLY TO THE ENTIRE DRAINAGE SYSTEM)

1. THE DESIGN INTENT OF THESE PLANS IS FOR ALL BENDS, LATERAL CONNECTIONS, REDUCTIONS, AND FITTINGS TO BE MADE WITH PRE-FABRICATED FITTINGS MANUFACTURED IN ACCORDANCE WITH ASTM C-76, CLASS 3 REQUIREMENTS, ALL DEFLECTIONS SHALL BE A MAXIMUM OF 5 DEGREES. IF THE CONTRACTOR ELECTS TO USE ALTERNATE CONNECTION METHODS THEN A SUBMITTAL SHALL BE APPROVED BY THE ENGINEER AND THE CITY OF LEANDER PRIOR TO COMMENCING PIPE LAYING OPERATIONS.

2. WHERE STORM DRAINAGE IS SHOWN TO BE INSTALLED ON A CURVE THE CONTRACTOR SHALL SUBMIT A LAYING SCHEDULE DEMONSTRATING ANTICIPATED JOINT SEPARATIONS USING 8' JOINTS, A COMBINATION OF 8' AND 4' JOINTS, OR LONG RADIUS PIPE TO ACHIEVE THE NECESSARY RADIUS WITHOUT EXCESSIVE JOINT SEPARATION. PROPOSED INSTALLATION METHOD SHALL BE APPROVED BY THE ENGINEER AND THE CITY OF LEANDER PRIOR TO COMMENCING PIPE LAYING OPERATIONS.

CALL BEFORE YOU DIG
1-800-245-4545
TEXAS ONE CALL SYSTEM

THE LOCATION OF ALL EXISTING UNDERGROUND UTILITIES ARE SHOWN IN APPROXIMATE LOCATIONS ONLY. THE CONTRACTOR SHALL DETERMINE THE EXACT LOCATION OF ALL EXISTING UTILITIES BEFORE COMMENCING WORK. THE CONTRACTOR WILL AGREE TO BE FULLY RESPONSIBLE FOR ANY AND ALL DAMAGES WHICH MIGHT BE INCURRED BY THEIR FAILURE TO EXACTLY LOCATE AND PRESERVE ANY AND ALL UNDERGROUND UTILITIES, STRUCTURES OR FACILITIES. CONTRACTOR SHALL NOTIFY ENGINEER OF ANY DISCREPANCIES 24- HOURS PRIOR TO COMMENCING CONSTRUCTION.

FOR CITY OF LEANDER USE

20-PICP-011

DESIGNED BY:	DRAFTED BY:
LAW	ZHL & CMC

REVISION	DATE
INITIAL SUBMITTAL	03.24.20
UPDATE #1 SUBMITTAL	05.18.20
UPDATE #2 SUBMITTAL	07.28.20

Carlson, Brigance & Doering, Inc.
Civil Engineering ◆ Surveying
FIRM ID #F3791
Main Office
5501 West William Cannon Dr.
Austin, Texas 78749
Phone No. (512) 280-5160
North Office
12129 RR 620 N., Ste. 600
Austin, Texas 78750
Fax No. (512) 280-5165

SHEET NAME: STORM SEWER LINE 'A' (0+00 to 7+00)

JOB NAME: HOMESTEAD PHASE 3

PROJECT: STREET, DRAINAGE, WATER, AND WASTEWATER IMPROVEMENTS

8/10/2020

STATE OF TEXAS
LEE A. WHITED
102471
PROFESSIONAL ENGINEER
CARLSON, BRIGANCE & DOERING, INC.
ID# F3791

DATE
NOVEMBER 2019

JOB NUMBER
5172

SHEET
18 OF 61

SHEET NO. 18

OCE-ENGINEERING.CTB
FILE PATH:J:\ACD\5172\dwg\5172-STORM.dwg - Aug 10, 2020 - 4:22pm

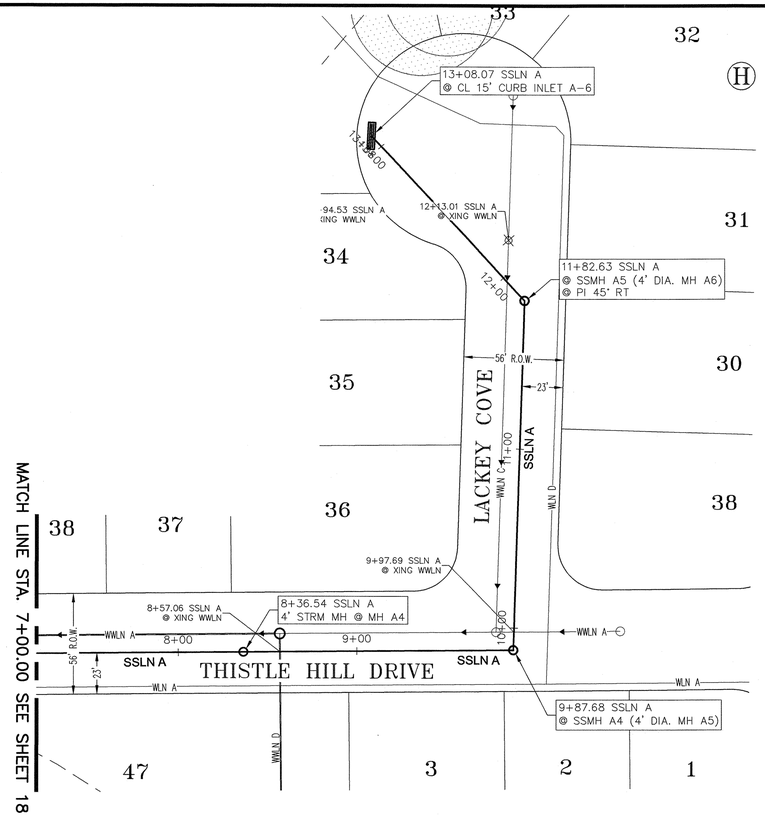

PROPOSED STORM SEWER LINE A (7+00 TO END)

SCALE: 1" = 40'

PROFILE SCALE
HORIZ. 1" = 40'
VERT. 1" = 4'

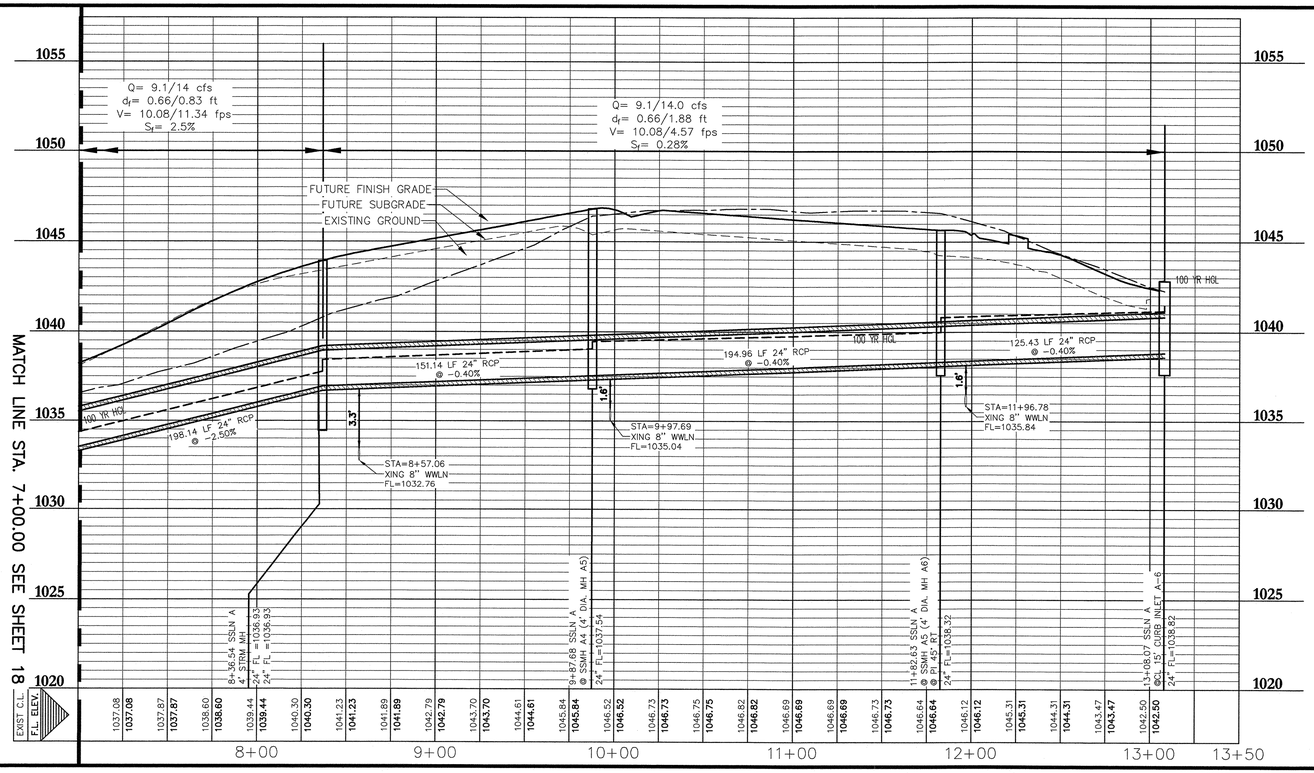

NOTES: (THESE NOTES APPLY TO THE ENTIRE DRAINAGE SYSTEM)

1. THE DESIGN INTENT OF THESE PLANS IS FOR ALL BENDS, LATERAL CONNECTIONS, REDUCTIONS, AND FITTINGS TO BE MADE WITH PRE-FABRICATED FITTINGS MANUFACTURED IN ACCORDANCE WITH ASTM C-76, CLASS 3 REQUIREMENTS, ALL DEFLECTIONS SHALL BE A MAXIMUM OF 5 DEGREES. IF THE CONTRACTOR ELECTS TO USE ALTERNATE CONNECTION METHODS THEN A SUBMITTAL SHALL BE APPROVED BY THE ENGINEER AND THE CITY OF LEANDER PRIOR TO COMMENCING PIPE LAYING OPERATIONS.

2. WHERE STORM DRAINAGE IS SHOWN TO BE INSTALLED ON A CURVE THE CONTRACTOR SHALL SUBMIT A LAYING SCHEDULE DEMONSTRATING ANTICIPATED JOINT SEPARATIONS USING 8' JOINTS, A COMBINATION OF 8' AND 4' JOINTS, OR LONG RADIUS PIPE TO ACHIEVE THE NECESSARY RADIUS WITHOUT EXCESSIVE JOINT SEPARATION. PROPOSED INSTALLATION METHOD SHALL BE APPROVED BY THE ENGINEER AND THE CITY OF LEANDER PRIOR TO COMMENCING PIPE LAYING OPERATIONS.

CALL BEFORE YOU DIG
TEXAS ONE CALL SYSTEM
1-800-245-4545

THE LOCATION OF ALL EXISTING UNDERGROUND UTILITIES ARE SHOWN IN APPROXIMATE LOCATIONS ONLY. THE CONTRACTOR SHALL DETERMINE THE EXACT LOCATION OF ALL EXISTING UTILITIES BEFORE COMMENCING WORK. THE CONTRACTOR WILL AGREE TO BE FULLY RESPONSIBLE FOR ANY AND ALL DAMAGES WHICH MIGHT BE INCURRED BY THEIR FAILURE TO EXACTLY LOCATE AND PRESERVE ANY AND ALL UNDERGROUND UTILITIES, STRUCTURES OR FACILITIES. CONTRACTOR SHALL NOTIFY ENGINEER OF ANY DISCREPANCIES 24- HOURS PRIOR TO COMMENCING CONSTRUCTION.

FOR CITY OF LEANDER USE

20-PICP-011

DESIGNED BY:	DRAFTED BY:
LAW	ZHL & CMC

REVISION	DATE
INITIAL SUBMITTAL	03.24.20
UPDATE #1 SUBMITTAL	05.18.20
UPDATE #2 SUBMITTAL	07.28.20

Carlson, Brigance & Doering, Inc.
Civil Engineering ◆ Surveying
FIRM ID #F3791
Main Office
5501 West William Cannon Dr.
Austin, Texas 78749
Phone No. (512) 280-5160
North Office
12129 RR 620 N., Ste. 600
Austin, Texas 78750
Fax No. (512) 280-5165

SHEET NAME: STORM SEWER LINE 'A' (7+00 to END)

JOB NAME: HOMESTEAD PHASE 3

PROJECT: STREET, DRAINAGE, WATER, AND WASTEWATER IMPROVEMENTS

8/10/2020

STATE OF TEXAS
LEE A. WHITED
102471
PROFESSIONAL ENGINEER
CARLSON, BRIGANCE & DOERING, INC.
ID# F3791

DATE
NOVEMBER 2019

JOB NUMBER
5172

SHEET
19 OF 61

SHEET NO.
19

OCE-STORM.CTB

FILE PATH:J:\ACD\5172\dwg\5172-STORM.dwg - Aug 10, 2020 - 6:19pm

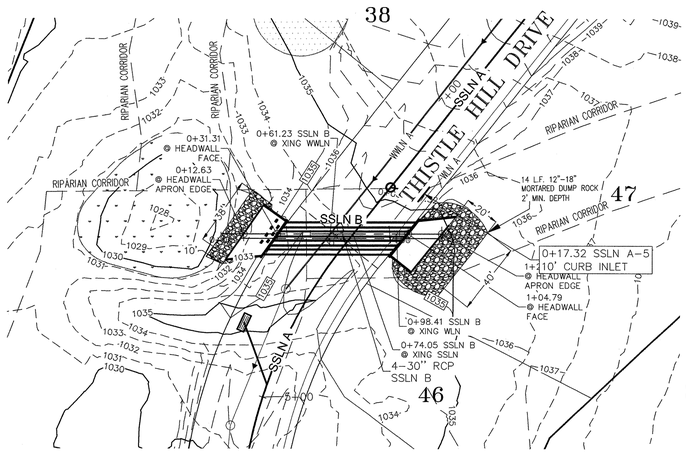

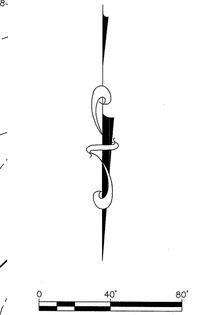

SCALE: 1" = 40'

PROPOSED STORM SEWER LINE B (0+ 00 TO END)

PROFILE SCALE
HORIZ. 1" = 40'
VERT. 1" = 4'

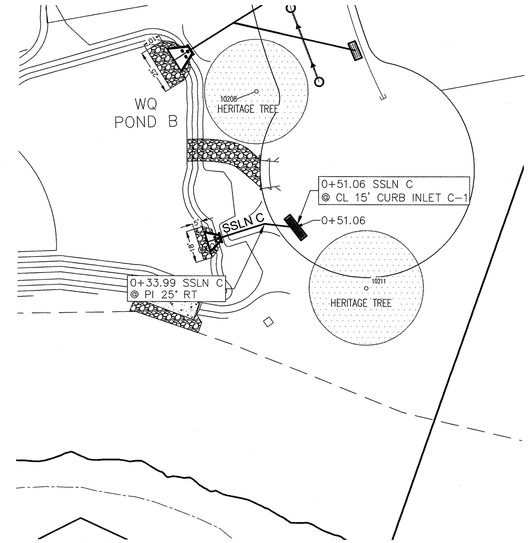

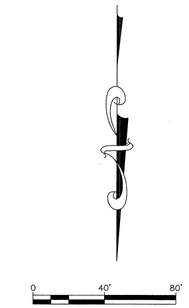

SCALE: 1" = 40'

PROPOSED STORM SEWER LINE C (0+ 00 TO END)

THE LOCATION OF ALL EXISTING UNDERGROUND UTILITIES ARE SHOWN IN APPROXIMATE LOCATIONS ONLY. THE CONTRACTOR SHALL DETERMINE THE EXACT LOCATION OF ALL EXISTING UTILITIES BEFORE COMMENCING WORK. THE CONTRACTOR WILL AGREE TO BE FULLY RESPONSIBLE FOR ANY AND ALL DAMAGES WHICH MIGHT BE INCURRED BY THEIR FAILURE TO EXACTLY LOCATE AND PRESERVE ANY AND ALL UNDERGROUND UTILITIES, STRUCTURES OR FACILITIES. CONTRACTOR SHALL NOTIFY ENGINEER OF ANY DISCREPANCIES 24- HOURS PRIOR TO COMMENCING CONSTRUCTION.

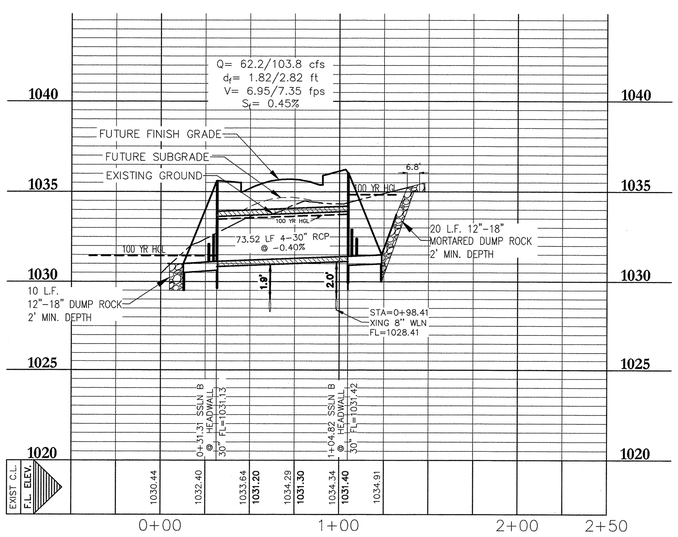

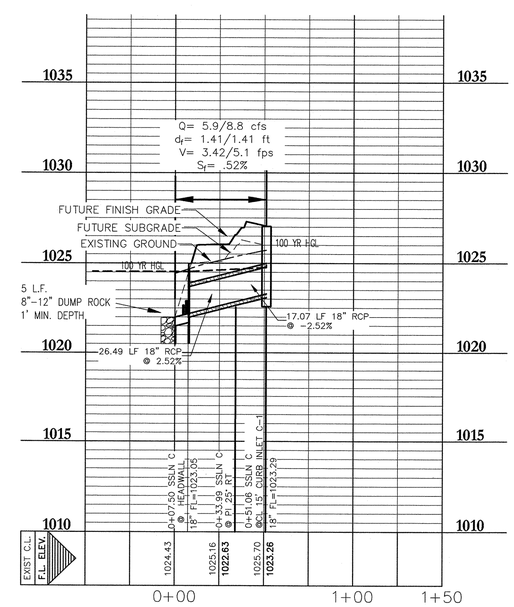

NOTES: (THESE NOTES APPLY TO THE ENTIRE DRAINAGE SYSTEM)

1. THE DESIGN INTENT OF THESE PLANS IS FOR ALL BENDS, LATERAL CONNECTIONS, REDUCTIONS, AND FITTINGS TO BE MADE WITH PRE-FABRICATED FITTINGS MANUFACTURED IN ACCORDANCE WITH ASTM C-76, CLASS 3 REQUIREMENTS, ALL DEFLECTIONS SHALL BE A MAXIMUM OF 5 DEGREES. IF THE CONTRACTOR ELECTS TO USE ALTERNATE CONNECTION METHODS THEN A SUBMITTAL SHALL BE APPROVED BY THE ENGINEER AND THE CITY OF LEANDER PRIOR TO COMMENCING PIPE LAYING OPERATIONS.

2. WHERE STORM DRAINAGE IS SHOWN TO BE INSTALLED ON A CURVE THE CONTRACTOR SHALL SUBMIT A LAYING SCHEDULE DEMONSTRATING ANTICIPATED JOINT SEPARATIONS USING 8' JOINTS, A COMBINATION OF 8' AND 4' JOINTS, OR LONG RADIUS PIPE TO ACHIEVE THE NECESSARY RADIUS WITHOUT EXCESSIVE JOINT SEPARATION. PROPOSED INSTALLATION METHOD SHALL BE APPROVED BY THE ENGINEER AND THE CITY OF LEANDER PRIOR TO COMMENCING PIPE LAYING OPERATIONS.

CALL BEFORE YOU DIG! 1-800-245-4545 TEXAS ONE CALL SYSTEM

FOR CITY OF LEANDER USE

20-PICP-011

DESIGNED BY:	DRAFTED BY:
LAW	ZHL & CMC

REVISION	DATE
INITIAL SUBMITTAL	03.24.20
UPDATE #1 SUBMITTAL	05.18.20
UPDATE #2 SUBMITTAL	07.28.20

Carlson, Brigance & Doering, Inc.
Civil Engineering ◆ Surveying
FIRM ID #F3791
Main Office: 5501 West William Cannon Dr. Austin, Texas 78749
North Office: 12129 RR 620 N., Ste. 600 Austin, Texas 78750
Phone No. (512) 280-5160 Fax No. (512) 280-5165

SHEET NAME: STORM SEWER LINE 'B' & 'C' (0+00 to END)

JOB NAME: HOMESTEAD PHASE 3

PROJECT: STREET, DRAINAGE, WATER, AND WASTEWATER IMPROVEMENTS

8/10/2020

STATE OF TEXAS
LEE A. WHITED
102471
LICENSED PROFESSIONAL ENGINEER
CARLSON, BRIGANCE & DOERING, INC.
ID# F3791

DATE	NOVEMBER 2019
JOB NUMBER	5172
SHEET	20 OF 61
SHEET NO.	20

OCE-ENGINEERING.CTB

FILE PATH:H:\ACDSW\72\dwg\5172STORM.dwg - Aug 10, 2020 - 4:22pm

SSLN A-1

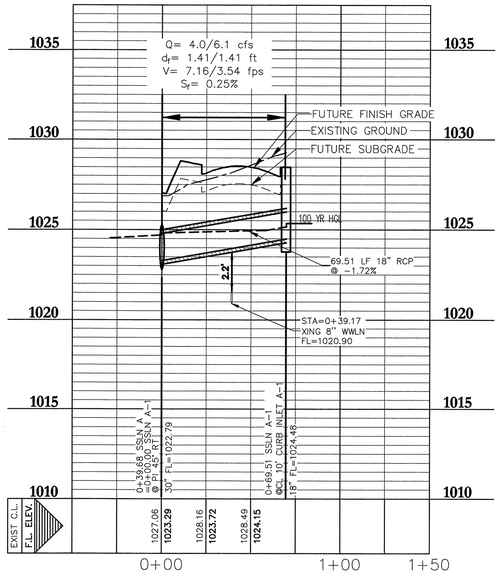

SSLN A-2

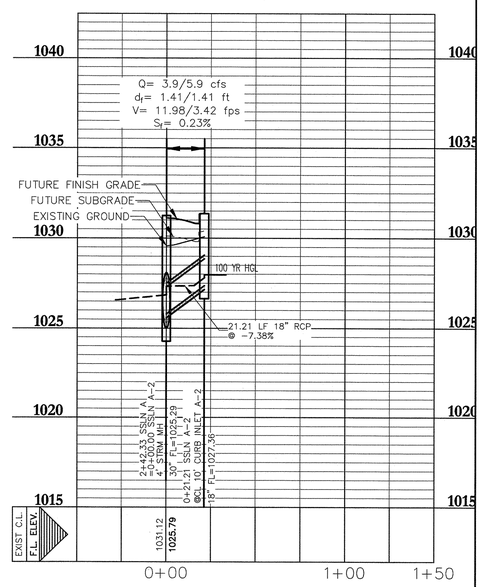

SSLN A-3

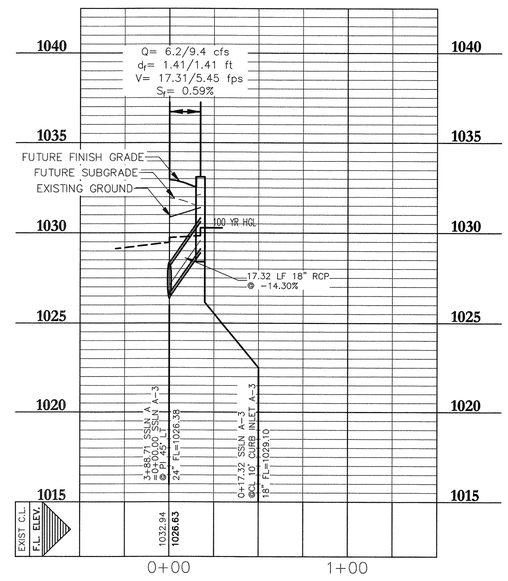

SSLN A-4

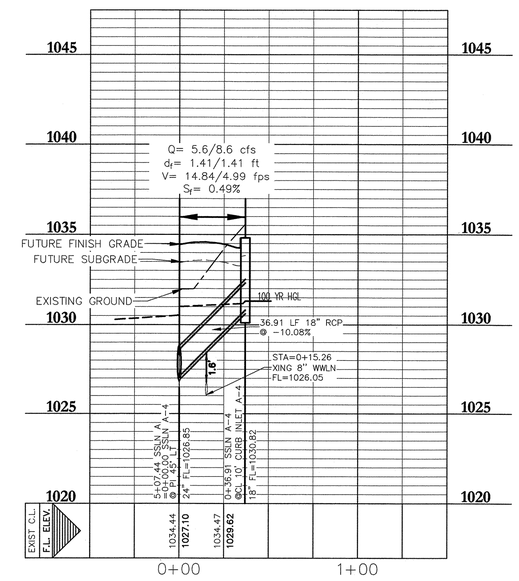

PROFILE SCALE
HORIZ. 1" = 40'
VERT. 1" = 4'

SSLN A-5

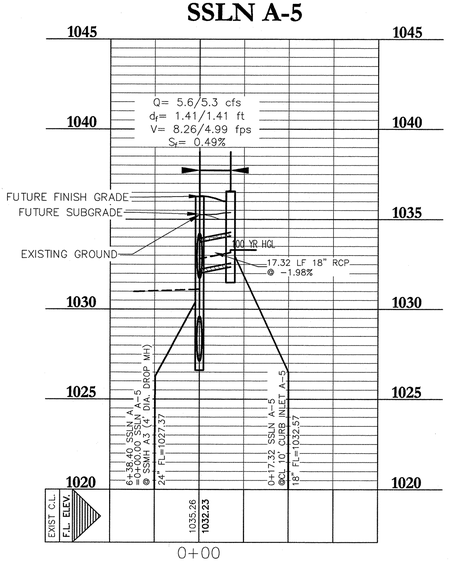

NOTES: (THESE NOTES APPLY TO THE ENTIRE DRAINAGE SYSTEM)

1. THE DESIGN INTENT OF THESE PLANS IS FOR ALL BENDS, LATERAL CONNECTIONS, REDUCTIONS, AND FITTINGS TO BE MADE WITH PRE-FABRICATED FITTINGS MANUFACTURED IN ACCORDANCE WITH ASTM C-76, CLASS 3 REQUIREMENTS. ALL DEFLECTIONS SHALL BE A MAXIMUM OF 5 DEGREES. IF THE CONTRACTOR ELECTS TO USE ALTERNATE CONNECTION METHODS THEN A SUBMITTAL SHALL BE APPROVED BY THE ENGINEER AND THE CITY OF LEANDER PRIOR TO COMMENCING PIPE LAYING OPERATIONS.

2. WHERE STORM DRAINAGE IS SHOWN TO BE INSTALLED ON A CURVE THE CONTRACTOR SHALL SUBMIT A LAYING SCHEDULE DEMONSTRATING ANTICIPATED JOINT SEPARATIONS USING 8' JOINTS, A COMBINATION OF 8' AND 4' JOINTS, OR LONG RADIUS PIPE TO ACHIEVE THE NECESSARY RADIUS WITHOUT EXCESSIVE JOINT SEPARATION. PROPOSED INSTALLATION METHOD SHALL BE APPROVED BY THE ENGINEER AND THE CITY OF LEANDER PRIOR TO COMMENCING PIPE LAYING OPERATIONS.

CALL BEFORE YOU DIG
1-800-245-4545
TEXAS ONE CALL SYSTEM

THE LOCATION OF ALL EXISTING UNDERGROUND UTILITIES ARE SHOWN IN APPROXIMATE LOCATIONS ONLY. THE CONTRACTOR SHALL DETERMINE THE EXACT LOCATION OF ALL EXISTING UTILITIES BEFORE COMMENCING WORK. THE CONTRACTOR WILL AGREE TO BE FULLY RESPONSIBLE FOR ANY AND ALL DAMAGES WHICH MIGHT BE INCURRED BY THEIR FAILURE TO EXACTLY LOCATE AND PRESERVE ANY AND ALL UNDERGROUND UTILITIES, STRUCTURES OR FACILITIES. CONTRACTOR SHALL NOTIFY ENGINEER OF ANY DISCREPANCIES 24- HOURS PRIOR TO COMMENCING CONSTRUCTION.

FOR CITY OF LEANDER USE

20-PICP-011

DESIGNED BY:	DRAFTED BY:
LAW	ZHL & CMC

REVISION	DATE
INITIAL SUBMITTAL	03.24.20
UPDATE #1 SUBMITTAL	05.18.20
UPDATE #2 SUBMITTAL	07.28.20

Carlson, Brigance & Doering, Inc.
Civil Engineering ◆ Surveying
FIRM ID #F3791
Main Office
5501 West William Cannon Dr.
Austin, Texas 78749
Phone No. (512) 280-5160
North Office
12129 RR 620 N., Ste. 600
Austin, Texas 78750
Fax No. (512) 280-5165

SHEET NAME: STORM SEWER LATERALS

JOB NAME: HOMESTEAD PHASE 3

PROJECT: STREET, DRAINAGE, WATER, AND WASTEWATER IMPROVEMENTS

8/10/2020

STATE OF TEXAS
LEE A. WHITED
102471
PROFESSIONAL ENGINEER
CARLSON, BRIGANCE & DOERING, INC.
FIRM # F3791

DATE	NOVEMBER 2019
JOB NUMBER	5172
SHEET	21 OF 61
SHEET NO.	21

OCE-ENGINEERING.CTB
FILE PATH:J:\AC3D5172\dwgs\5172-STORM.dwg -Aug 10, 2020 -4:22pm

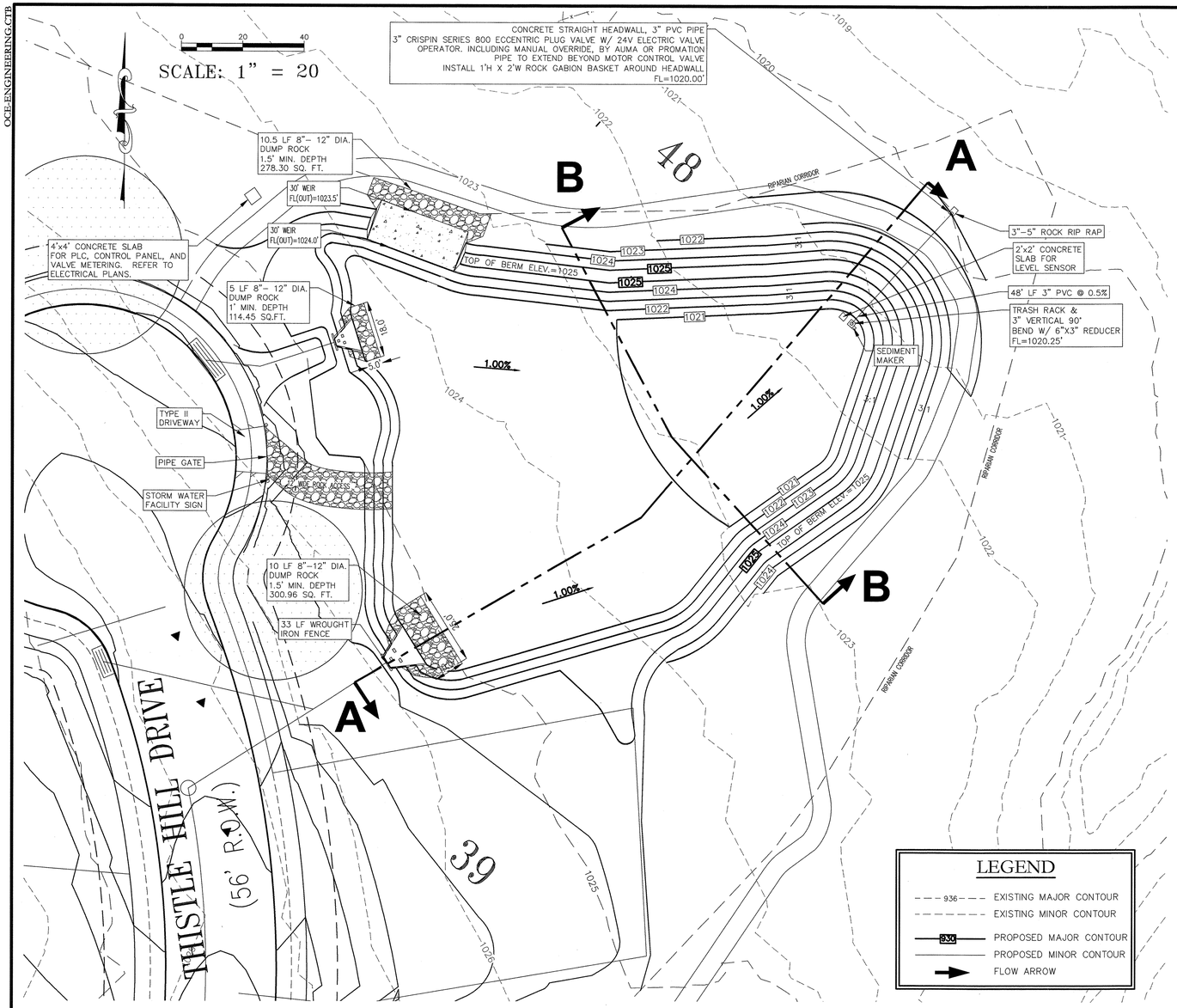

LEGEND

- 936 — EXISTING MAJOR CONTOUR
- EXISTING MINOR CONTOUR
- 930 — PROPOSED MAJOR CONTOUR
- PROPOSED MINOR CONTOUR
- FLOW ARROW

EXPOSED CONCRETE NOTE:
ALL EXPOSED CONCRETE THAT IS VISIBLE IS REQUIRED TO BE CLAD IN STONE INCLUDING BUT NOT LIMITED TO LEDGESTONE, FIELDSTONE, CAST STONE, OR OTHER DECORATIVE MATERIALS AS APPROVED BY THE DIRECTOR OF PLANNING. ALL OTHER EXPOSED CONCRETE IS REQUIRED TO BE CLAD IN STONE AS LISTED ABOVE OR TEXTURED AND TINTED IN EARTHEN COLORS.

BATCH DETENTION								
START ELEV=	1020.25	AREA		AVG.AREA		VOLUME		TOTAL VOLUME
ELEV.		(FT^2)		(FT^2)		(FT^3)		(FT^3)
1020.25		1						
				2007.90				
1021		4015				1505.92		1505.92
				9432.67				
1022		14850				9432.67		10938.59
				15657.17				
1023		16464				15657.17		26595.75
WQVR=1023.96				17296.00				43286.00
1024	WQVP	18128				17296.00		43891.75
				19644.00				
1025		21160				19644.00		63535.75
*WQVR = WATER QUALITY VOLUME REQUIRED, WQVP = WQV PROVIDED								

WEIR CALCULATIONS

$Q=3LH^{1.5}$

Q_{100} =40.4 CFS

L=30'

$H=\left(\frac{Q_{100}}{3L}\right)^{.67}=\left(\frac{40.4}{(3)(30')}\right)^{.67}$

H_{100}=.58'

ORIFICE CALCULATIONS

WQVP=43892 CF

DRAW DOWN TIME(S)=48HR $X\frac{3600}{ft}$=172800

$Q_{48}=\frac{43892\,CF}{172800\,sec}=Q_{48}$ .254CFS

$Q=.6A\sqrt{2QH}$

$h=\frac{1024-1020.25}{2}$

h = 1.875'

$A=\frac{Q}{.6\sqrt{2GH}}=\frac{.254\,CFS}{.6[(2)(32.2)(1.875)]^{1/2}}$

A=.0385FT²

$A=\frac{\pi D^2}{4}$ = .0385FT²

D²=.0491FT²

D=.221FT = 2.66" USE 2.5" ORIFICE CAP

Texas Commission on Environmental Quality

TSS Removal Calculations 04-20-2009

Project Name: HOMESTEAD PH 3 POND B
Date Prepared: 07.21.2020

Additional information is provided for cells with a red triangle in the upper right corner. Place the cursor over the cell.
Text shown in blue indicate location of instructions in the Technical Guidance Manual - RG-348.
Characters shown in red are data entry fields.
Characters shown in black (Bold) are calculated fields. Changes to these fields will remove the equations used in the spreadsheet.

1. The Required Load Reduction for the total project: Calculations from RG-348 — Pages 3-27 to 3-30

Page 3-29 Equation 3.3: $L_M = 27.2(A_N \times P)$

where:
$L_{M\ TOTAL\ PROJECT}$ = Required TSS removal resulting from the proposed development = 80% of increased load
A_N = Net increase in impervious area for the project
P = Average annual precipitation, inches

Site Data: Determine Required Load Removal Based on the Entire Project

County =	Williamson	
Total project area included in plan * =	18.21	acres
Predevelopment impervious area within the limits of the plan * =	0.00	acres
Total post-development impervious area within the limits of the plan* =	4.12	acres
Total post-development impervious cover fraction * =	0.23	
P =	32	inches
$L_{M\ TOTAL\ PROJECT}$ =	3586	lbs.

* The values entered in these fields should be for the total project area.

Number of drainage basins / outfalls areas leaving the plan area = 1

2. Drainage Basin Parameters (This information should be provided for each basin):

Drainage Basin/Outfall Area No. =	1	
Total drainage basin/outfall area =	8.74	acres
Predevelopment impervious area within drainage basin/outfall area =	0.00	acres
Post-development impervious area within drainage basin/outfall area =	3.51	acres
Post-development impervious fraction within drainage basin/outfall area =	0.40	
$L_{M\ THIS\ BASIN}$ =	3053	lbs.

3. Indicate the proposed BMP Code for this basin.

Proposed BMP = Batch Detention
Removal efficiency = 91 percent

Aqualogic Cartridge Filter
Batch Detention
Bioretention
Contech StormFilter
Constructed Wetland
Extended Detention
Grassy Swale
Retention / Irrigation
Sand Filter
Stormceptor
Vegetated Filter Strips
Vortechs
Wet Basin
Wet Vault

4. Calculate Maximum TSS Load Removed (L_R) for this Drainage Basin by the selected BMP Type.

RG-348 Page 3-33 Equation 3.7: L_R = (BMP efficiency) x P x (A_I x 34.6 + A_P x 0.54)

where:
A_C = Total On-Site drainage area in the BMP catchment area
A_I = Impervious area proposed in the BMP catchment area
A_P = Pervious area remaining in the BMP catchment area
L_R = TSS Load removed from this catchment area by the proposed BMP

A_C =	8.74	acres
A_I =	3.51	acres
A_P =	5.23	acres
L_R =	3619	lbs

5. Calculate Fraction of Annual Runoff to Treat the drainage basin / outfall area

Desired $L_{M\ THIS\ BASIN}$ =	3586	lbs.
F =	0.99	

6. Calculate Capture Volume required by the BMP Type for this drainage basin / outfall area. Calculations from RG-348 — Pages 3-34 to 3-36

Rainfall Depth =	3.66	inches
Post Development Runoff Coefficient =	0.31	
On-site Water Quality Volume =	35723	cubic feet

Calculations from RG-348 — Pages 3-36 to 3-37

Off-site area draining to BMP =	1.31	acres
Off-site Impervious cover draining to BMP =	0.00	acres
Impervious fraction of off-site area =	0.00	
Off-site Runoff Coefficient =	0.02	
Off-site Water Quality Volume =	348	cubic feet
Storage for Sediment =	7214	
Total Capture Volume (required water quality volume(s) x 1.20) =	43286	cubic feet

FOR CITY OF LEANDER USE

20–PICP–011

REVISION	DATE	DESIGNED BY:	DRAFTED BY:
INITIAL SUBMITTAL	03.24.20	LAW	ZHL & CMC
UPDATE #1 SUBMITTAL	05.18.20		
UPDATE #2 SUBMITTAL	07.28.20		

Carlson, Brigance & Doering, Inc.
Civil Engineering ◆ Surveying
FIRM ID #F3791
Main Office: 5501 West William Cannon Dr. Austin, Texas 78749
Phone No. (512) 280-5160
North Office: 12129 RR 620 N. Ste. 600 Austin, Texas 78750
Fax No. (512) 280-5165

SHEET NAME: WATER QUALITY - POND B
JOB NAME: HOMESTEAD PHASE 3
PROJECT: STREET, DRAINAGE, WATER, AND WASTEWATER IMPROVEMENTS

8/10/2020
STATE OF TEXAS
LEE A. WHITED
102471
PROFESSIONAL ENGINEER
CARLSON, BRIGANCE & DOERING, INC.
FIRM # F3791

DATE NOVEMBER 2019
JOB NUMBER 5172
SHEET 22 OF 61
SHEET NO. 22

OCE-ENGINEERING.CTB
FILE PATH:J:\ACD\5172\dwg\5172-POND.dwg - Aug 10, 2020 - 4:22pm

OCE-ENGINEERING.CTB

CROSS SECTION A-A

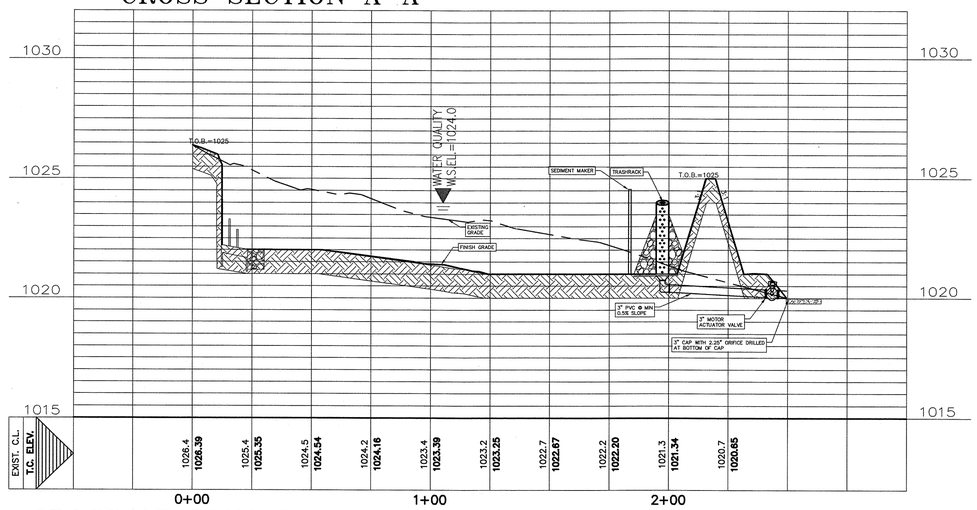

CROSS SECTION B-B

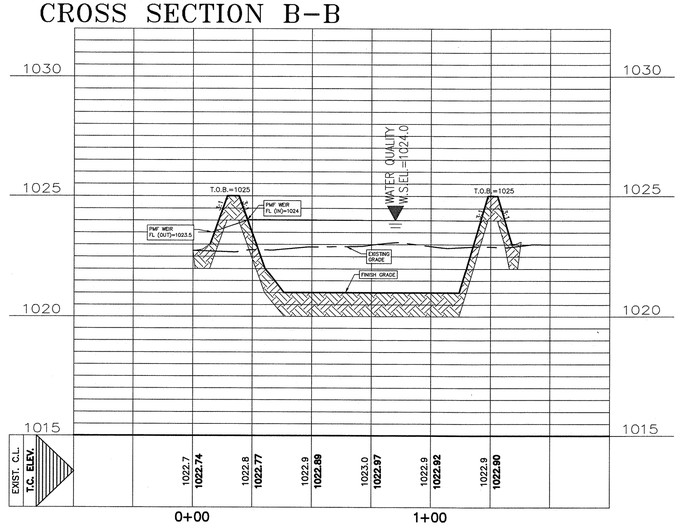

0 30 60

SCALE: 1" = 30.00
1"-3' VERT.

FOR CITY OF LEANDER USE

20-PICP-011

DESIGNED BY:	DRAFTED BY:
LAW	ZHL & CMC

REVISION	DATE
INITIAL SUBMITTAL	03.24.20
UPDATE #1 SUBMITTAL	05.18.20
UPDATE #2 SUBMITTAL	07.28.20

Carlson, Brigance & Doering, Inc.
Civil Engineering ◆ Surveying
FIRM ID #F3791
Main Office: 5501 West William Cannon Dr. Austin, Texas 78749 Phone No. (512) 280-5160
North Office: 12120 RR 620 N., Ste. 600 Austin, Texas 78750 Fax No. (512) 280-5165

SHEET NAME: WATER QUALITY - POND B SECTIONS

JOB NAME: HOMESTEAD PHASE 3

PROJECT: STREET, DRAINAGE, WATER, AND WASTEWATER IMPROVEMENTS

8/10/2020

STATE OF TEXAS
LEE A. WHITED
102471
PROFESSIONAL ENGINEER
CARLSON, BRIGANCE & DOERING, INC.
ID# F3791

DATE	NOVEMBER 2019
JOB NUMBER	5172
SHEET	23 OF 61
SHEET NO.	23

FILE PATH:J:\ACSD\5172\dwg\5172-POND.dwg - Aug 10, 2020 - 5:37pm

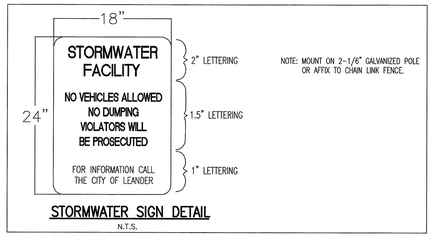

STORMWATER SIGN DETAIL

N.T.S.

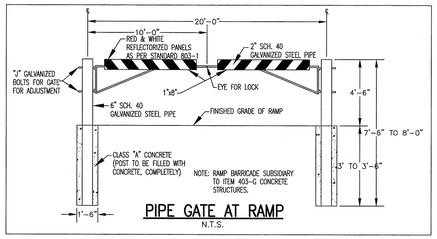

PIPE GATE AT RAMP

N.T.S.

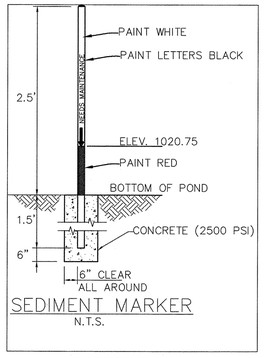

SEDIMENT MARKER

N.T.S.

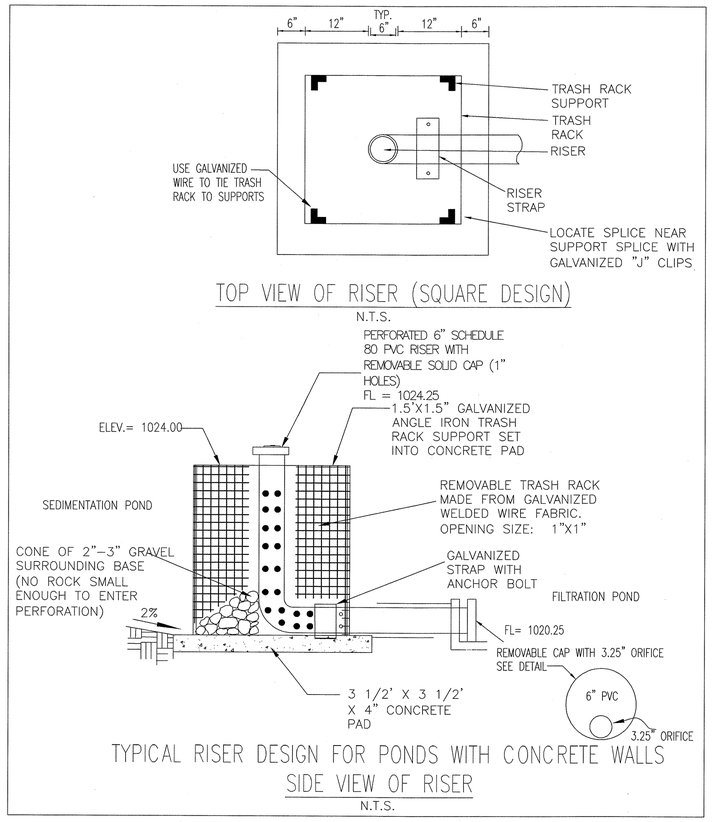

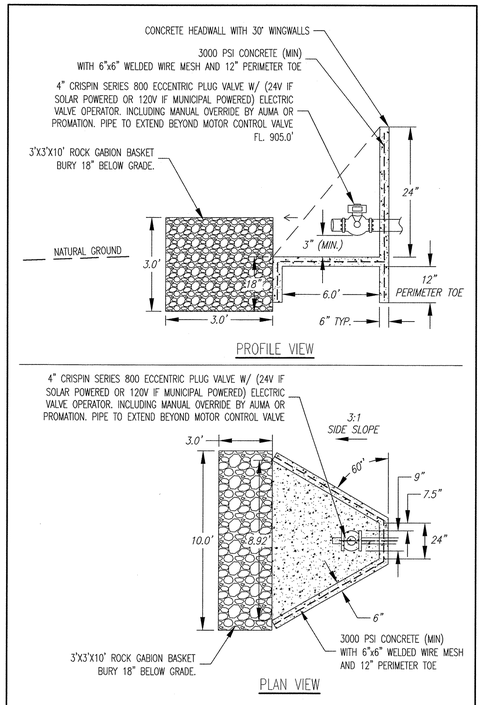

HEADWALL WITH PLUG VALVE DETAIL

N.T.S.

EXPOSED CONCRETE NOTE:
ALL EXPOSED CONCRETE THAT IS VISIBLE IS REQUIRED TO BE CLAD IN STONE INCLUDING BUT NOT LIMITED TO LEDGESTONE, FIELDSTONE, CAST STONE, OR OTHER DECORATIVE MATERIALS AS APPROVED BY THE DIRECTOR OF PLANNING. ALL OTHER EXPOSED CONCRETE IS REQUIRED TO BE CLAD IN STONE AS LISTED ABOVE OR TEXTURED AND TINTED IN EARTHEN COLORS.

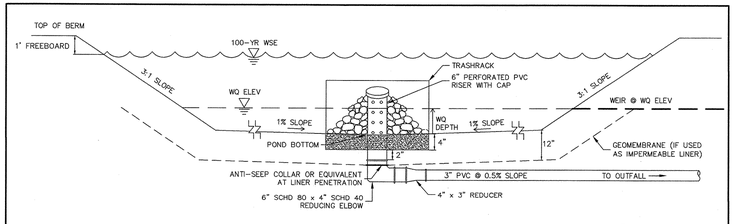

BATCH DETENTION POND A CROSS SECTION

N.T.S.

FOR CITY OF LEANDER USE

20-PICP-011

DESIGNED BY:	DRAFTED BY:
LAW	ZHL & CMC

REVISION	DATE
INITIAL SUBMITTAL	03.24.20
UPDATE #1 SUBMITTAL	05.18.20
UPDATE #2 SUBMITTAL	07.28.20

Carlson, Brigance & Doering, Inc.
Civil Engineering ◆ Surveying
FIRM ID #F3791
Main Office: 5501 West William Cannon Dr. Austin, Texas 78749
North Office: 12129 Rain Creek Pkwy. Suite 600 Austin, Texas 78750
Phone No. (512) 280-5160 Fax No. (512) 280-5165

SHEET NAME: WATER QUALITY - POND DETAILS

JOB NAME: HOMESTEAD PHASE 3

PROJECT: STREET, DRAINAGE, WATER, AND WASTEWATER IMPROVEMENTS

8/10/2020

STATE OF TEXAS
LEE A. WHITED
102471
LICENSED PROFESSIONAL ENGINEER
CARLSON, BRIGANCE & DOERING, INC.
ID# F3791

DATE NOVEMBER 2019

JOB NUMBER 5172

SHEET 24 OF 61

SHEET NO. 24

OCE-ENGINEERING.CTB

FILE PATH:J:\ACAD\5172\dwg\5172-POND.dwg - Aug 10, 2020 - 5:37pm

ELECTRICAL SYMBOL LEGEND

NOT ALL SYMBOLS SHOWN MAY BE USED

PLAN LEGEND

SYMBOL	DESCRIPTION
J	JUNCTION BOX
	DISCONNECT SWITCH
	MOTOR STARTER OR LIGHTING CONTACTOR, SURFACE MOUNTED
	COMBINATION MOTOR STARTER, AND DISCONNECT SWITCH, SURFACE MOUNTED
1 M	MANHOLE, NUMBER OF MANHOLE SHOWN NEXT TO SYMBOL
1 C	COMMUNICATIONS MANHOLE, NUMBER OF MANHOLE SHOWN NEXT TO SYMBOL
MH 23A T	TELECOMMUNICATIONS MANHOLE, NUMBER OF MANHOLE SHOWN NEXT TO SYMBOL
W	KEYED NOTE, NUMBER IN POSITION "W" MATCHES NOTE NUMBER
$	SWITCH, TOGGLE, WALL MOUNTED, (SINGLE POLE THROW) MOUNT 48" AFF, UON
$3	SWITCH, TOGGLE, WALL MOUNTED, THREE WAY, (SINGLE POLE DOUBLE THROW) MOUNT 48" AFF, UON
$EP	EXPLOSION PROOF SWITCH, TOGGLE, WALL MOUNTED, (SINGLE POLE THROW) MOUNT 48" AFF, UON
$M	SWITCH, MOTOR RATED, WITH THERMAL OVERLOADS
	TERMINAL BOARD
	TELEPHONE OUTLET, PRIVATE, MOUNTED 12" AFF, UON
WH	WATTHOUR METER
	POLE
	TRANSFORMER, PAD MOUNTED, KVA RATING MAY BE DISPLAYED NEXT TO SYMBOL
T	TRANSFORMER, DRY TYPE, KVA RATING MAY BE DISPLAYED INSIDE OF SYMBOL
	ANTENNA
W-X, Y, Z	CONDUIT AND/OR WIRING HOMERUN TO PANEL. TERMINAL BOARD, OR CONTROLLER, USED WITH THE FOUR PRECEDING SYMBOLS. DESTINATION EQUIPMENT IDENTIFIER SHOWN IN POSITION "W" CIRCUIT NUMBER SHOWN IN POSITIONS "X", "Y", OR "Z". THESE CIRCUITS MAY ONLY SHOW ONE CIRCUIT NUMBER
	WIRING CONTINUATION
	FLEXIBLE CONDUIT
	HOMERUN
	CONDUIT CAPPED FOR FUTURE USE
	CONDUIT GOING DOWN
	CONDUIT GOING UP
	CONDUIT RUN UNDERGROUND OR CONCEALED
	CONDUIT RUN EXPOSED
	120V RECEPTACLE FLUSH MOUNTED
	250V RECEPTACLE FLUSH MOUNTED
	WELDING OUTLET
T	THERMOSTAT
	PANELBOARD SURFACE MOUNTED

GROUNDING LEGEND

SYMBOL	DESCRIPTION
A OR B	GROUNDING RECEPTACLE = A, GROUND TEST WELL = B
B	CONDUCTOR BARE UON
	GROUNDING CONNECTION
G	GROUND BUS BAR LENGTH AS SHOWN BY SYMBOL LENGTH UON
	COPPERCLAD GROUND ROD

SYMBOL	MODIFIERS
(E)	EXISTING
WP	WEATHERPROOF
EP	EXPLOSION PROOF
GFCI	GROUND FAULT CIRCUIT INTERRUPTER CIRCUIT
T	TELEPHONE
P	POWER
F	FIRE ALARM
VT	VAPORTIGHT
WT	WATERTIGHT
PT	PAINTTIGHT
P	PRIMARY
O	OVERHEAD
U	UNDERGROUND
S	SECONDARY
FT	FIXED TEMPERATURE
R	RECESSED
G	GROUNDED
UNG	UNGROUNDED

ONE LINE AND CONTROL SCHEMATIC LEGEND

SYMBOL	DESCRIPTION
	GROUNDING CONNECTION, WHEN USED WITH TRANSFORMER SYMBOL IT DENOTES A NEUTRAL GROUNDING CONNECTION
	GROUNDED WYE WINDING CONNECTION
	DELTA WINDING CONNECTION
	RELAY OR CONTACTOR CONTACTS
	SEPARABLE CONNECTOR OR CONNECTION FOR DRAWOUT ASSEMBLIES
	CONDUCTOR CONNECTION
	CIRCUIT BREAKER, MOLDED CASE, TRIP CURRENT AND QUANTITY OF POLES (P) SHOWN NEXT TO SYMBOL
	SWITCH, DISCONNECT, NON-FUSED, LOAD BREAK, CONTINUOUS CURRENT RATING AND QUANTITY OF POLES SHOWN NEXT TO SYMBOL
	SWITCH, DISCONNECT, FUSED, LOAD BREAK, FUSED AMPERE RATING AND FUSE TYPE SHOWN NEXT TO SYMBOL
	FUSE, AMPERE RATING AND FUSE TYPE SHOWN NEXT TO SYMBOL
	MOTOR THERMAL OVERLOAD PROTECTOR
M	MOTOR STARTER MAIN CONTACTOR
CR	CONTACTOR OR RELAY COIL, LETTER(S) INSIDE OF SYMBOL MATCH CONTACTS CONTROLLED
PT	PRESSURE TRANSMITTER
	EQUIPMENT ENCLOSURE
VS	VOLTMETER SWITCH
AS	AMMETER SWITCH
A	AMMETER
V	VOLTMETER
	CURRENT TRANSFORMER WITH RATIO SHOWN
10	MOTOR, 10 HORSEPOWER SHOWN
	LIMIT SWITCH NORMALLY CLOSED
	LIMIT SWITCH NORMALLY OPEN
	MOTOR OPERATED VALVE GEARED LIMIT SWITCH
	PRESSURE SWITCH NORMALLY CLOSED OPENS ON INCREASING PRESSURE
	PRESSURE SWITCH NORMALLY OPEN CLOSES ON INCREASING PRESSURE
	LEVEL SWITCH NORMALLY CLOSED OPENS ON INCREASING LEVEL
	LEVEL SWITCH NORMALLY OPEN CLOSES ON INCREASING LEVEL
	FLOW SWITCH NORMALLY CLOSED OPENS WITH FLOW
	FLOW SWITCH NORMALLY OPEN CLOSES ON LOSS OF FLOW
	SPACE HEATER
øF	PHASE FAILURE RELAY
	DRAW-OUT CIRCUIT BREAKER
50 51	INSTANTANEOUS/TIME OVERCURRENT RELAY
51N	NEUTRAL TIME OVERCURRENT RELAY
	CABLE TERMINATOR
27 47	UNDERVOLTAGE/PHASE-SEQUENCE RELAY
86	LOCKOUT RELAY
DO	DESOLVED OXYGEN SENSOR
FS	FLOW SWITCH
AI	ANALYTIC INDICATOR
LT	LEVEL TRANSDUCER
FM	FLOW METER

ONE LINE AND CONTROL SCHEMATIC LEGEND (CONT'D)

SYMBOL	DESCRIPTION
	INSTRUMENT TRANSFORMER PT-POTENTIAL TRANSFORMER
480V 120V	CONTROL POWER TRANSFORMER. VOLTAGE AS SHOWN
	LIGHTNING ARRESTOR
	SWITCH
	NORMALLY OPEN CONTACT
	NORMALLY CLOSED CONTACT
	MOMENTARY PUSHBUTTON
HAND OFF AUTO	THREE POSITION MAINTAINED CONTACT SWITCH
MOV	MOTOR OPERATED VALVE
	SOLENOID VALVE
ETM	ELAPSED TIME METER
TD 0-10 MIN. TOE	TIME DELAY RELAY. TIMES OUT AFTER ENERGIZATION
TD 0-10 MIN. TOD	TIME DELAY RELAY. TIMES OUT AFTER DENERGIZATION
R	PILOT LIGHT R=RED B=BLUE G=GREEN A=AMBER Y=YELLOW
LSHH	HIGH LEVEL FLOAT SWITCH
LSLL	LOW LEVEL CUTOFF FLOAT SWITCH
MCP SIZE 1 FVNR	MOTOR STARTER FVNR=FULL VOLTAGE NON-REVERSING VFD=VARIABLE FREQUENCY DRIVE WITH BYPASS SOFT START=ELECTRONIC SOFT START RVNR=REDUCED VOLTAGE NON-REVERSING FVR=FULL VOLTAGE REVERSING MCP=MOTOR CIRCUIT PROTECTOR SIZE=NEMA STARTER SIZE
STE	LEVEL SENSOR TERMINATION ENCLOSURE
TS	TEMPERATURE SWITCH
MP	MOISTURE PROBE
SOV	SOLENOID VALVE
LS	LIMIT SWITCH
AS	AMMETER SWITCH
VS	VOLTMETER SWITCH
PS	PRESSURE SWITCH
LC	LIGHTING CONTACTOR

2 working days Call before you Dig. CALL 811

CONDUIT AND WIRING LEGEND

	NEW
	EXISTING TO BE REMOVED
	EXISTING TO REMAIN
UE	UNDERGROUND ELECTRICAL
UF	UNDERGROUND FIBER OPTIC
UT	UNDERGROUND TELEPHONE
UG	UNDERGROUND GROUNDING
OE	OVERHEAD ELECTRICAL

ABBREVIATIONS

A	AMPERES OR TRIP AMPERES
AC	ALTERNATING CURRENT
ACT	ABOVE COUNTER TOP
A/C	AIR CONDITIONING
AFF	ABOVE FINISHED FLOOR
AFG	ABOVE FINISHED GRADE
AIC	SYMMETRICAL AMPS INTERRUPTING CAPACITY
AWG	AMERICAN WIRE GAGE
BD	BOARD
BLDG	BUILDING
C	CONDUIT
CAB	CABINET
CAP	CAPACITOR
CB	CIRCUIT BREAKER
CKT	CIRCUIT
CL	CURRENT LIMITING
CONN	CONNECT OR CONNECTION
CONT'D	CONTINUED
CONTR	CONTRACTOR
CPT	CONTROL POWER TRANSFORMER
CT	CURRENT TRANSFORMER
CU	COPPER
DBL	DOUBLE
DIM	DIMENSION
DISC SW	DISCONNECT SWITCH
DC	DIRECT CURRENT
EA	EACH
EC	ELECTRICAL CONTRACTOR
EF	EXHAUST FAN
ELEC	ELECTRICAL
EM	EMERGENCY
EMT	ELECTRICAL METALLIC TUBING
ENCL	ENCLOSURE
EQUIP	EQUIPMENT
FLA	FULL LOAD AMPS
FLEX	FLEXIBLE CONDUIT
FIX	FIXTURE
GC	GENERAL CONTRACTOR
GALV	GALVANIZED
GEN	GENERATOR
GFCI	GROUND FAULT CIRCUIT INTERRUPTER
GFI	GROUND FAULT INTERRUPTER
GND	GROUND
HOA	HAND-OFF-AUTO
HP	HORSEPOWER
HT	HEIGHT
HTR	HEATER
HZ	HERTZ
JB	JUNCTION BOX
KCMIL	THOUSAND CIRCULAR MILLS
KVA	KILOVOLT AMPERES
KW	KILOWATT
KWH	KILOWATT HOURS
LA	LIGHTNING ARRESTOR
L-L	LINE TO LINE
L-N	LINE TO NEUTRAL
LTG	LIGHT OR LIGHTING
MC	MECHANICAL CONTRACTOR
MCB	MAIN CIRCUIT BREAKER
MCC	MOTOR CONTROL CENTER

ABBREVIATIONS (CONT'D)

MCP	MOTOR CIRCUIT PROTECTOR
MIN	MINIMUM
MLO	MAIN LUGS ONLY
MSB	MAIN SWITCH BOARD
MTD	MOUNTED
MTG	MOUNTING
N.C.	NORMALLY CLOSED
NEC	NATIONAL ELECTRICAL CODE
NEMA	NATIONAL ELECTRICAL MANUFACTURERS ASSOCIATION
NEUT	NEUTRAL
NIC	NOT IN THIS CONTRACT
N.O.	NORMALLY OPEN
NTS	NOT TO SCALE
OC	ON CENTER
OH	OVERHEAD
OL	OVERLOAD
ø	PHASE
P	POLE
PC	PHOTOELECTRIC
PEN	PENDANT
PNL	PANELBOARD
PRV	PRESSURE REDUCING VALVE
PVC	POLYVINYL CHLORIDE
R	RELOCATED
RECP	RECEPTACLE
REQ'D	REQUIRED
REQ'MTS	REQUIREMENTS
RM	ROOM
SCH	SCHEDULE
SE	SERVICE ENTRANCE
SM	SURFACE MOUNT
SN	SOLID NEUTRAL
SOV	SOLENOID OPERATED VALVE
SPACE	SPACES(S) ONLY (NO BREAKER OR DEVICE)
SPARE	SPARE BREAKER OR DEVICE
SPD	SURGE PROTECTIVE DEVICE
SPECS	CONTRACT SPECIFICATIONS
SS	STAINLESS STEEL HARDWARE
SWBD	SWITCHBOARD
SW	SWITCH
SWGR	SWITCH GEAR
TB	TELEPHONE BACKBOARD
TTB	TELEPHONE TERMINAL BOARD
TYP	TYPICAL
UE	UNDERGROUND ELECTRIC
UL	UNDERWRITERS LABORATORIES
UON	UNLESS OTHERWISE NOTED
UT	UNDERGROUND TELEPHONE
VA	VOLT AMPERES
W	WATTS
W/	WITH
WH	WATER HEATER
WP	WEATHER PROOF
XFMR	TRANSFORMER
XMTR	TRANSMITTER
1/C	SINGLE CONDUCTOR CABLE
3/C	THREE CONDUCTOR CABLE

GENERAL NOTES: (APPLICABLE TO ALL ELECTRICAL SHEETS)

1. ALL WORK SHALL BE PERFORMED IN ACCORDANCE WITH THE NATIONAL ELECTRICAL CODE, ALL CITY, COUNTY, AND STATE REGULATIONS, NFPA, ANSI, UL, IEEE, AND THE LOCAL CODE AUTHORITY HAVING JURISDICTION. THE ELECTRICAL CONTRACTOR SHALL BE RESPONSIBLE FOR ALL PERMITS AND INSPECTIONS.
2. ALL ELECTRICIANS SHALL BE LICENSED BY THE APPROPRIATE CITY, STATE, OR LOCAL CODE AUTHORITY HAVING JURISDICTION.
3. THE ELECTRICAL CONTRACTOR SHALL FOLLOW ALL OSHA AND OWNER SAFETY RULES AS REQUIRED TO WORK ON THIS SITE.
4. ALL INSTALLATIONS SHALL BE DONE IN A NEAT AND WORKMAN LIKE MANNER.
5. ALL POWER OUTAGES SHALL BE PERFORMED DURING NON-BUSINESS HOURS. COORDINATE ALL POWER OUTAGES WITH THE OWNER. NOTIFY THE OWNER IN WRITING 10 DAYS PRIOR TO SCHEDULING ANY POWER OUTAGES.
6. THE ELECTRICAL CONTRACTOR SHALL PROVIDE ALL TEMPORARY ELECTRICAL POWER AND LIGHTING REQUIRED FOR THIS PROJECT.
7. THE DEMOLITION DRAWINGS (IF APPLICABLE) ARE DIAGRAMMATIC IN NATURE. THE ELECTRICAL CONTRACTOR SHALL BE THOROUGHLY FAMILIAR WITH THE PROJECT SCOPE OF WORK PRIOR TO SUBMITTING THEIR BID.
8. THE ELECTRICAL CONTRACTOR SHALL VERIFY THE ELECTRICAL REQUIREMENTS OF ALL OWNER PROVIDED EQUIPMENT AND SHALL NOTIFY THE ENGINEER IMMEDIATELY OF ANY DISCREPANCIES.
9. ALL WORK SHOWN ON DRAWINGS IS NEW UNLESS OTHERWISE NOTED.
10. ALL GROUNDING SHALL BE PER NEC AND LOCAL CODES.
11. ALL ELECTRICAL CONSTRUCTION ON THE PROJECT SHALL CONFORM TO THE NEC AND ALL OTHER AUTHORITIES HAVING JURISDICTION. THE CONTRACTOR SHALL OBTAIN ALL PERMITS REQUIRED AND PAY ALL FEES.
12. ALL WIRING SHALL BE FREE OF SHORTS AND GROUNDS. NO CIRCUIT WIRING SHALL BE LOADED BEYOND THE PERMITTED AMPACITIES ALLOWED BY THE NEC. ALL WIRE SIZES ARE FOR COPPER.
13. CONTRACTOR SHALL FIELD VERIFY ALL CONDITIONS AND DIMENSIONS PRIOR TO SUBMITTING BID.
14. ELECTRICAL CONTRACTOR SHALL PROVIDE ALL EQUIPMENT AND MATERIALS NECESSARY TO MAKE A COMPLETE AND WORKABLE JOB INCLUDING FINAL HOOK-UP OF ALL EQUIPMENT.
15. FIRE STOP SHALL BE PROVIDED AT ALL LOCATIONS WHERE ELECTRICAL EQUIPMENT OR SYSTEMS PENETRATE FIRE RATED WALLS. SEE ARCHITECTURAL PLANS FOR RATED WALL LOCATIONS. CONTROL WIRING TO MECHANICAL EQUIPMENT IS NOT SHOWN ON THESE SHEETS.
16. RISER AND ONE-LINE DIAGRAMS ARE MEANT TO SHOW ONLY VERTICAL AND ELECTRICAL RELATIONSHIPS AND THEREFORE MAY NOT INCLUDE ALL REQUIRED EQUIPMENT, DEVICES AND ACCESSORIES.
17. EQUIPMENT INTERRUPTING CAPACITIES SPECIFIED IN THE CONTRACT DOCUMENTS ARE BASED UPON EQUIPMENT CHARACTERISTICS AND IMPEDANCES SHOWN ON THE DRAWINGS. IF ACTUAL INSTALLED EQUIPMENT DEVIATES FROM THESE CHARACTERISTICS OR HAS LOWER IMPEDANCES THE CONTRACTOR SHALL INCREASE THE INTERRUPTING CAPACITIES OF ALL ITEMS ON THE LOAD SIDE OF THE DEVIANT EQUIPMENT IN DIRECT PROPORTION TO THE CHANGED CHARACTERISTICS. INTERRUPTING CAPACITIES SHALL NOT BE REDUCED TO VALUES LESS THAN THOSE REQUIRED BY THE CONTRACT DOCUMENTS.
18. EQUIPMENT SIZES ARE AS DESIGNED. CIRCUIT BREAKERS, CONDUIT, MOTOR STARTERS, DISCONNECT SWITCHES, PLUG-IN'S, ETC., SHALL BE ADJUSTED TO THE EQUIPMENT SUBMITTED AND APPROVED FOR INSTALLATION ON THIS PROJECT.
19. REFER TO ARCHITECTURAL OR CIVIL DRAWINGS FOR SITE INFORMATION.
20. LIGHT FIXTURE MOUNTING HEIGHTS ARE MEASURED BETWEEN THE FLOOR AND THE BOTTOM OF THE FIXTURE.

STATE OF TEXAS STEVE L. KANETZKY 84696 LICENSED PROFESSIONAL ENGINEER

SKE
S. Kanetzky Engineering, LLC.
5920 W. William Cannon
Bldg. 7, Suite 200
Austin, Texas 78749
(512) 329-5774.
www.skaneng.com
TBPE Firm No. F-2356
SKE PROJECT # 2490920

DESIGNED BY:	DRAFTED BY:
SPC/RWH	RWH/TSE

DATE | REVISION

Carlson, Brigance & Doering, Inc.
FIRM ID #F3791
Civil Engineering ◆ Surveying
5501 West William Cannon ◆ Austin, Texas 78749
Phone No. (512) 280-5160 ◆ Fax No. (512) 280-5165

SHEET NAME: ELECTRICAL NOTES, SYMBOLS & ABBREVIATIONS

JOB NAME: HOMESTEAD PHASE 3 BATCH DETENTION

PROJECT: STREET, DRAINAGE, WATER, AND WASTEWATER IMPROVEMENTS

DATE: AUGUST, 2020

JOB NUMBER: 5172

SHEET: 25 OF 61

SHEET NO.: E1.0

FILE PATH:K:\Projects\2020\2490920-CBD-Homestead Phase 3 Batch Detention\01 Design Phase_CAD\2490319-E10.dwg – Aug 10, 2020 – 2:07pm

ELECTRICAL SPECIFICATIONS

PART 1 – GENERAL

1.01 WORK INCLUDED

A. ELECTRICAL SYSTEMS

1.02 RELATED WORK

A. THE WORK COVERED BY THIS SPECIFICATION CONSISTS OF FURNISHING ALL LABOR, SUPPLIES AND MATERIALS, SHOP DRAWINGS AND A LIST OF MAKE AND CATALOG NUMBERS OF ALL EQUIPMENT AND MATERIALS TO BE INSTALLED AND PERFORMING ALL OPERATIONS, INCLUDING INSTALLATION OF LIGHTING FIXTURES, ELECTRICAL EQUIPMENT, CUTTING AND PATCHING, COORDINATION WITH OTHER TRADES ON THE JOB, ETC., NECESSARY FOR THE INSTALLATION OF COMPLETE ELECTRICAL SYSTEMS AS SHOWN ON THE DRAWINGS AND HEREINAFTER SPECIFIED. THESE SPECIFICATIONS SUPPLEMENT THE GENERAL CONDITIONS AND SPECIFICATIONS.

B. EXAMINATION OF SITE: THE CONTRACTOR SHALL THOROUGHLY EXAMINE SITE AND SATISFY HIMSELF AS TO THE CONDITIONS UNDER WHICH THE WORK IS TO BE PERFORMED. THE CONTRACTOR SHALL VERIFY AT THE SITE ALL MEASUREMENTS AFFECTING HIS WORK AND SHALL BE RESPONSIBLE FOR THE CORRECTNESS OF THE SAME. NO EXTRA COMPENSATION WILL BE ALLOWED TO THE CONTRACTOR FOR EXPENSES DUE TO HIS NEGLECT TO EXAMINE OR FAILURE TO DISCOVER CONDITIONS WHICH AFFECT HIS WORK. NO EXTRA COMPENSATION WILL BE ALLOWED ON ACCOUNT OF DIFFERENCES BETWEEN ACTUAL DIMENSIONS AND THOSE INDICATED ON THE DRAWINGS.

C. THE AGREEMENT FORMS, GENERAL CONDITIONS AND SUPPLEMENTARY CONDITIONS OF THE SPECIFICATIONS SHALL APPLY TO THE WORK SPECIFIED IN DIVISION 26.

1.03 DEFINITION

A. "WIRING": WIRE OR CABLE, INSTALLED IN RACEWAY WITH ALL REQUIRED BOXES, FITTINGS, CONNECTORS AND ACCESSORIES, COMPLETELY INSTALLED.

B. "FEEDER": WIRING TO ANY DEVICE OR EQUIPMENT IN WHICH NUMBER SIX AWG COPPER (#6 CU) OR LARGER CONDUCTORS ARE USED.

C. "POWER WIRING": WIRING TO ANY DEVICE OR EQUIPMENT SERVED BY A MULTI–POLE BREAKER.

1.04 QUALITY ASSURANCE

A. CODES: COMPLY WITH THE LATEST EDITION OF THE NATIONAL ELECTRICAL CODE (NEC) AND ANY OTHER AUTHORITIES HAVING JURISDICTION OVER THE WORK.

B. PERMITS AND INSPECTIONS: PROVIDE ALL PERMITS REQUIRED AND OBTAIN FINAL INSPECTION AND APPROVAL FROM THE INSPECTION DEPARTMENT HAVING JURISDICTION.

C. WHERE DIFFERENT SECTIONS OF ANY APPLICABLE CODES SPECIFY DIFFERENT MATERIALS, METHODS OF CONSTRUCTION, OR OTHER REQUIREMENTS, THE MOST RESTRICTIVE SHALL GOVERN.

D. STANDARDS FOR MATERIAL AND WORKMANSHIP: USE MATERIALS THAT ARE NEW AND LISTED AND LABELED BY UNDERWRITERS LABORATORIES (UL) AS CONFORMING TO ITS STANDARDS, WHERE SUCH A STANDARD HAS BEEN ESTABLISHED FOR THE PARTICULAR TYPE OF MATERIAL IN QUESTION. EXECUTE WORK IN A WORKMAN LIKE MANNER, TO PRESENT A NEAT AND MECHANICAL APPEARANCE WHEN COMPLETED.

1.05 SUBSTITUTION OF MATERIALS

A. NO SUBSTITUTION OF MATERIAL IS ALLOWED WITHOUT WRITTEN PRIOR AUTHORIZATION FROM THE ENGINEER AND OWNER. DETERMINATION OF WHAT IS CONSIDERED EQUAL IS AT THE SOLE DISCRETION OF THE ENGINEER AND OWNER.

B. INCLUDE SUFFICIENT DESCRIPTIVE INFORMATION, INCLUDING MANUFACTURER'S PUBLISHED DATA TO ESTABLISH CONTRACT COMPLIANCE. SUBMIT SAMPLES IF REQUESTED BY ARCHITECT/ENGINEER.

1.06 DRAWINGS AND SPECIFICATIONS

A. THE WIRING LAYOUTS ARE SCHEMATIC AND DO NOT NECESSARILY SHOW THE EXACT LOCATION OF RACEWAYS, OUTLETS, ETC. REFER TO THE ARCHITECTURAL DRAWINGS FOR ACTUAL DIMENSIONS. FIT WORK TO CONFORM TO THE DETAILS OF BUILDING CONSTRUCTION. COORDINATE ALL WORK TO ASSURE PROPER CLEARANCE.

1.07 AS–BUILT DRAWINGS

A. AS WORK PROGRESSES, RECORD ON ONE (1) SET OF ELECTRICAL PRINTS ALL CHANGES AND DEVIATIONS FROM THE CONTRACT DOCUMENTS IN SIZE, LOCATIONS AND TYPES OF ALL MATERIALS AND EQUIPMENT. RECORD FINAL LOCATION OF OUTLETS, SWITCHES, STARTERS, UNDERGROUND AND EXPOSED CONDUITS, ETC. TO INDICATE THE FINAL INSTALLATION. MAKE SUFFICIENT MEASUREMENTS TO LOCATE ALL EQUIPMENT AND CONDUITS. PROVIDE AS–BUILT DRAWINGS.

B. THE CONTRACTOR SHALL PREPARE A TYPED PANEL DIRECTORY FOR EACH PANEL UTILIZED FOR THIS PROJECT. THIS DIRECTORY SHALL IDENTIFY THE CIRCUIT NUMBER, DEVICES SERVED, AND LOCATION OF DEVICES BY ROOM NUMBER. HE SHALL FILE THEM WITH THE BUILDING MANAGER WHEN THE WORK IS COMPLETE.

1.08 MAINTENANCE DATA

A. FURNISH AND DELIVER TO THE ARCHITECT/ENGINEER TWO (2) COMPLETE COPIES OF ALL DATA PREPARED BY MANUFACTURERS, DETAILING OPERATION AND MAINTENANCE INSTRUCTION FOR ALL EQUIPMENT.

1.09 PENETRATIONS, CUTTING, AND PATCHING

A. PERFORM CUTTING AND PATCHING IN ACCORDANCE WITH THE GENERAL AND SUPPLEMENTARY CONDITIONS OF THE CONTRACT.

B. PROVIDE ALL SLEEVES REQUIRED FOR PROPER INSTALLATION OF WORK INCLUDED IN THIS SECTION.

C. MAKE ALL PENETRATIONS THROUGH WALLS AT 90 DEGREE ANGLES. SEAL ALL PENETRATIONS AT FIRE AND SMOKE PARTITIONS WITH FIRE SAFING MATERIAL. SEAL ALL PENETRATIONS AT SOUND WALLS WITH SOUNDPROOFING MATERIAL.

1.10 SUBMITTALS

A. SHOP DRAWINGS AND MATERIAL BROCHURES: FURNISH AN ELECTRONIC SET OF SHOP DRAWINGS AND PRODUCT DATA IN PDF FORMAT TO THE ARCHITECT/ENGINEER ON THE FOLLOWING MATERIALS:

1. DISCONNECT SWITCHES
2. RACEWAYS
3. CONDUCTORS
4. CONTROL PANELS
5. INSTRUMENTATION

1.11 COOPERATION

A. THE CONTRACTOR SHALL SCHEDULE HIS WORK, AND IN EVERY WAY POSSIBLE, COOPERATE WITH ALL OTHER TRADES IN THE JOB TO AVOID DELAYS, INTERFERENCES AND UNNECESSARY WORK. HE SHALL COOPERATE WITH THEM IN PROVIDING FOR THE INSTALLATION OF THIS WORK AND COORDINATE WITH WORK OF OTHER TRADES TO ASSURE PROPER CLEARANCE OF PIPING, DUCTWORK, CONDUIT, ETC. WHEN SUCH IS REQUIRED.

1.12 WIRING WORKMANSHIP

A. RUN WIRING IN ALL BRANCH CIRCUIT PANELBOARDS AND TERMINAL CABINETS PARALLEL OR AT RIGHT ANGLES TO THE SIDES OR TOP OF THE EQUIPMENT HOUSING.

B. GROUP AND HARNESS CONDUCTORS TOGETHER USING LOCKING TYPE CABLE TIES. CABLE TIES: AS MANUFACTURED BY THE PANDUIT CORPORATION OR THOMAS AND BETTS.

1.13 STORAGE MATERIALS

A. KEEP THE BUILDING AND PREMISES CLEAN AND CLEAR OF SCRAP MATERIALS AT ALL TIMES. STORE MATERIALS AND EQUIPMENT IN DESIGNATED STORAGE AREAS.

1.14 ORDERING OF MATERIALS

A. ORDER MATERIALS AND EQUIPMENT SO AS NOT TO JEOPARDIZE PROGRESS OF CONSTRUCTION OR COMPLETION DATE.

1.15 SAFETY PRECAUTIONS AND PROGRAMS

A. IT SHALL BE THE DUTY AND RESPONSIBILITY OF THE CONTRACTOR AND ALL OF ITS SUBCONTRACTORS TO BE FAMILIAR AND COMPLY WITH ALL REQUIREMENTS OF PUBLIC LAW 91–96, 29 U.S.C. SECS. 651 ET. SEQ., THE OCCUPATIONAL SAFETY AND HEALTH ACT OF 1970 (OSHA), AND ALL AMENDMENTS THERETO AND TO ENFORCE AND COMPLY WITH ALL OF THE PROVISIONS OF THIS ACT. IN ADDITION, ON PROJECTS IN WHICH TRENCH EXCAVATION WILL EXCEED A DEPTH OF FIVE FEET (5'), THE CONTRACTOR AND ALL OF ITS SUBCONTRACTORS SHALL COMPLY WITH ALL REQUIREMENTS OF 29 C.F.R., SECS. 1926.652 AND 1926.653, OSHA SAFETY AND HEALTH STANDARDS.

1.16 WARRANTY

A. GUARANTEE ALL WORK UNDER THIS SECTION FOR WORKMANSHIP, LABOR AND MATERIALS FOR A PERIOD OF ONE (1) YEAR FROM THE DATE OF ACCEPTANCE BY THE OWNER OR HIS AUTHORIZED REPRESENTATIVE.

PART 2 – PRODUCTS AND EXECUTION

2.01 CONDUIT

A. EXCEPT AS OTHERWISE NOTED, SPECIFIED OR REQUIRED, INSTALL ALL WIRES USED IN THIS PROJECT IN CONDUIT AS HEREINAFTER SPECIFIED:

BELOW GRADE: SCHEDULE 40 PVC
ABOVE GRADE (OUTSIDE): ALUMINUM RIGID
ABOVE GRADE (INSIDE): ALUMINUM RIGID
ELBOWS: PVC COATED RIGID STEEL

B. INSTALL CONDUITS CONTINUOUS FROM OUTLET TO OUTLET, FROM OUTLET TO CABINET, JUNCTION BOX AND PULL BOX. SECURE CONDUITS TO ALL BOXES, ETC., IN SUCH A MANNER THAT EACH SYSTEM WILL BE ELECTRICALLY CONTINUOUS FROM SERVICE TO ALL OUTLETS. TERMINATE ALL CONDUIT RUNS FROM CABINETS AND JUNCTION BOXES IN APPROVED OUTLET BOXES. INSTALL CONDUITS AS HIGH AS POSSIBLE UP AGAINST STRUCTURE ABOVE. AVOID ROUTING CONFLICTS WITH HVAC EQUIPMENT/DUCTWORK, SANITARY WASTE, VENT PIPING, AND DOMESTIC WATER PIPING.

C. INSTALL A NYLON PULL WIRE (200 LB. TEST) AND TIE ENDS IN ALL CONDUIT LINES LEFT EMPTY FOR FUTURE USE.

D. TRAPPED OR INACCESSIBLE JUNCTION BOXES, OUTLETS, ETC. ARE NOT ALLOWED.

E. GENERALLY, CONCEAL ALL CONDUITS UNLESS OTHERWISE DIRECTED OR INDICATED ON THE DRAWINGS.

F. NO BENDS PERMITTED WITH A RADIUS LESS THAN SIX (6) TIMES THE DIAMETER OF THE CONDUIT OR MORE THAN 900.

G. PROVIDE JUNCTION BOXES OR PULL BOXES TO AVOID EXCESSIVE RUNS OR TOO MANY BENDS BETWEEN OUTLETS.

H. INCREASE CONDUIT SIZES SHOWN ON THE PLANS AS REQUIRED FACILITATING PULLING OF CONDUCTORS.

I. RUN ALL CONDUITS PARALLEL TO OR AT RIGHT ANGLES TO THE BUILDING WALLS AND SUPPORT FROM WALLS OR CEILINGS AT INTERVALS REQUIRED BY CODE WITH APPROVED CLAMPS OR HANGERS.

J. INSTALL APPROVED APPLETON, CROUSE HINDS, OR O.Z. MANUFACTURING CO. EXPANSION FITTINGS IN ALL EMT RUNS WHICH PASS THROUGH EXPANSION JOINTS IN THE BUILDING. OTHER METHODS TO PROVIDE FOR THIS EXPANSION MUST BE APPROVED BY THE ARCHITECT/ENGINEER.

2.02 WIRING

A. INSTALL WIRING AS FOLLOWS:

1. FEEDERS AND POWER WIRING: CONDUCTORS IN RIGID ALUMINUM RIGID CONDUIT WHEN INSTALLED IN DRY LOCATION ABOVE GRADE. SCHEDULE 40 PVC WHEN INSTALLED BELOW GRADE. USE PVC COATED RIGID ELBOWS.
2. BRANCH CIRCUITS: INSTALL CONDUCTORS IN ALUMINUM RIGID CONDUIT.
3. INSTALL ALL WIRING IN CONDUIT. USE ONLY UL LISTED LUBRICANTS IN PULLING THE CONDUCTORS.
4. INSTALL CONDUCTORS CONTINUOUS FROM OUTLET TO OUTLET AND FROM OUTLET TO JUNCTION BOX OR PULL BOX. INSTALL SPLICES AND JOINTS CAREFULLY AND SECURELY TO BE MECHANICALLY AND ELECTRICALLY SOLID WITH PRESSURE TYPE CONNECTORS. USE 3M "SCOTCHLOCK" OR IDEAL "WING NUT" OR EQUAL TWIST–ON CONNECTORS FOR #10 AND SMALLER CONDUCTORS.
5. CONNECT CONDUCTORS FOR LIGHTING AND RECEPTACLE CIRCUITS TO THE PANEL AS DETAILED WITH COLOR CODED JACKET. COLOR CODE ALL WIRES WITH THE TYPE, SIZE, MAKE AND VOLTAGE MARKED ON IT. COLOR CODE WIRING WITH THE SAME COLOR BEING USED WITH ITS RESPECTIVE PHASE AS FOLLOWS, UNLESS OTHERWISE REQUIRED BY THE LOCAL AUTHORITY HAVING JURISDICTION.

	120/240 VOLT DELTA	120/208 VOLT WYE	480/277 VOLT WYE
PHASE A	RED	RED	BROWN
PHASE B	ORANGE	BLACK	YELLOW
PHASE C	BLACK	BLUE	PURPLE
NEUTRAL	WHITE	WHITE	GRAY
GROUND	GREEN	GREEN	GREEN

6. BRANCH CIRCUIT CONDUCTORS SHALL NOT BE SMALLER THAN NO. 12 AWG. INCREASE THE WIRE SIZES UP ONE (1) SIZE WHEREVER THE RUN DISTANCE EXCEEDS 200 FEET.
7. ALL WIRING AND CABLE INCLUDING FIBER OPTIC, ELECTRICAL, DATA, TELECOMMUNICATIONS, TEMPERATURE CONTROLS, SECURITY, FIRE PROTECTION, ETC. SHALL BE RUN IN CONDUIT.
8. ELECTRICAL CONTRACTOR MAY GROUP WIRES WITH SAME VOLTAGE FOR FIELD DEVICES IN CONDUIT AS HE DEEMS BEST APPROPRIATE.
9. ANALOG AND LOW VOLTAGE SIGNALS SHALL NOT RUN IN SAME CONDUIT AS 120VAC AND 480VAC CIRCUITS.

2.03 CONDUCTORS

A. COPPER OF 98% CONDUCTIVITY.

B. NO. 10 AND SMALLER: SOLID TYPE THWN/THHN, EXCEPT AS OTHERWISE NOTED.

C. NO. 8 AND LARGER: STRANDED, TYPE THWN/THHN, EXCEPT AS OTHERWISE NOTED.

D. MINIMUM SIZE CONDUCTORS USED SHALL BE NO. 12 AWG FOR ALL APPLICATIONS EXCEPT WHERE SPECIFICALLY NOTED OTHERWISE (A.C. CONTROLS, ETC.).

E. USE WIRE AND CABLE FROM ONE (1) MANUFACTURER. DELIVER IN THE ORIGINAL WRAPPING BEARING THE UNDERWRITERS LABORATORIES (UL) LABEL.

2.04 OUTLETS

A. USE GALVANIZED STEEL OR CAST TYPE BOXES AT ALL OUTLETS FOR LIGHTING FIXTURES, WALL SWITCHES, WALL RECEPTACLES, ETC.

B. SECURELY ATTACH OUTLET BOXES FOR FIXTURES AND DEVICES TO THE BUILDING CONSTRUCTION WITH EXPANSION BOLTS.

C. FLUSH MOUNT ALL OUTLET BOXES, REGARDLESS OF WALL OR CEILING CONSTRUCTION, UNLESS THEY ARE SPECIFICALLY SHOWN AS BEING USED WITH EXPOSED CONDUIT. IF SURFACE MOUNTED, USE CAST TYPE AS SPECIFIED ABOVE. UTILITY BOXES ARE NOT ALLOWED.

2.05 INSTALLATION

A. INSTALL RACEWAYS EXPOSED. SUPPORT EXPOSED RACEWAYS AT INTERVALS NOT EXCEEDING TEN FEET (10') WITH MACHINE SCREWS FOR METAL CONSTRUCTION AND EXPANSION BOLTS FOR CONCRETE CONSTRUCTION.

B. INSTALL THE EDGES OF ALL OUTLET BOXES FLUSH WITH THE SURFACE IN WHICH THEY ARE RECESSED. SCREW ATTACH INTERNAL DEVICES BEFORE ATTACHING COVERPLATE. DO NOT USE COVERPLATES AS A MEANS OF TIGHTENING THE DEVICES IN PLACE.

2.06 DISCONNECT AND FEEDER SWITCHES

A. FEEDER SWITCHES AND DISCONNECT SWITCHES: HEAVY DUTY, EXCEPT AS OTHERWISE NOTED. IN DAMP LOCATIONS OR EXPOSED TO THE WEATHER, USE NEMA 3R, RAINTIGHT.

B. DISCONNECT SWITCHES: FACTORY INSTALLED PROVISION FOR PADLOCKING IN EITHER THE "ON" OR "OFF" POSITION.

2.07 FUSES

A. FUSES: BUSSMANN OR APPROVED EQUAL.

2.08 LABELING

A. LABEL ALL PANELS, CONTROL POINTS, SWITCHES, AND MOTORS, AS DIRECTED. IDENTIFY PANELS BY PANEL NUMBER. LABEL SWITCHES, INDICATING THE EQUIPMENT WHICH THEY CONTROL. ALL LABELS SHALL BE ENGRAVED. PANEL DIRECTORIES TO BE TYPED. COORDINATE ALL EQUIPMENT NUMBERING WITH MECHANICAL CONTRACTOR.

B. INSTALL ARC FLASH HAZARD LABELS ON ALL NEW SWITCHBOARDS, PANELBOARDS, INDUSTRIAL CONTROL PANELS, METER SOCKET ENCLOSURES AND MOTOR CONTROL CENTERS PER NEC 110.16. PANDUIT #PPS0305W2100 OR EQUAL.

2.09 GROUNDING

A. PROVIDE GROUNDING FOR ELECTRICAL SYSTEM IN ACCORDANCE WITH THE REQUIREMENTS OF THE NATIONAL ELECTRICAL CODE (NEC)

2.10 COVERPLATES

A. WHERE WIRING DEVICES ARE FLUSH MOUNTED, INSTALL STAINLESS STEEL COVERPLATES.

B. WHERE WIRING DEVICES ARE SURFACE MOUNTED, INSTALL FORMED STEEL COVERPLATES WITH CADMIUM PLATING.

C. WHERE WEATHERPROOF COVERPLATES ARE REQUIRED, MEET UL "WET LOCATION COVER CLOSED" REQUIREMENTS. USE COVERPLATES THAT ARE HINGED AND GASKETED WITH SPRING LOADED CLOSER.

D. INSTALL FINISHED COVERPLATES ON ALL JUNCTION BOXES, OUTLET BOXES, SECTIONAL SWITCH BOXES, UTILITY BOXES, ETC.

E. WHERE MORE THAN ONE (1) DEVICE IS INDICATED AT A LOCATION, MOUNT DEVICES IN COMBINED SECTION GANG BOXES, COVERED BY A COMMON PLATE.

2.11 RECEPTACLES

A. DUPLEX RECEPTACLES: 20 AMPERE, 125 VOLT, SELF OR AUTOMATIC GROUNDING, GFCI.

B. SPECIAL MOUNTING HEIGHTS ARE NOTED ON THE ARCHITECTURAL DRAWINGS. UNLESS OTHERWISE INDICATED ON THE ELECTRICAL DRAWINGS, MOUNT DEVICES AT THE FOLLOWING HEIGHTS ABOVE FINISHED FLOOR:

1. DUPLEX RECEPTACLE	18"
2. WALL SWITCHES	48"
3. VOICE & VOICE/DATA OUTLETS	18"
4. WALL TELEPHONE OUTLETS	48"

2.12 SWITCHES

A. PROVIDE HEAVY–DUTY, AC, QUIET SWITCHES. THE SWITCHES SHALL BE HUBBELL 1221 OR EQUAL, 120–277 VOLT, 20 AMPERES, SPECIFICATION GRADE. SWITCHES SHALL BE SINGLE POLE, DOUBLE POLE, THREE WAY, FOUR WAY, OR KEY OPERATED AS SCHEDULED ON THE DRAWINGS AND SHALL BE THE SELF GROUNDING TYPE. COLOR SHALL BE IVORY.

2.13 LIGHTING FIXTURES

A. PROVIDE ALL LIGHTING FIXTURES, AS SCHEDULED ON DRAWINGS, COMPLETE WITH LAMPS AND HARDWARE. INSTALL COMPLETELY WIRED, CONNECTED AND IN OPERATING ORDER.

B. CONFIRM ALL CEILING CONDITIONS, CLEARANCES AND OPERATING VOLTAGES BEFORE ORDERING LIGHTING FIXTURES.

C. SUBMIT SHOP DRAWINGS.

2.13.1 LAMPS

A. INSTALL SCHEDULED LAMPS MANUFACTURED BY GENERAL ELECTRIC, PHILLIPS, OR APPROVED EQUAL.

2.13.2 FIXTURES

A. PROVIDE LIGHTING FIXTURES WHICH HAVE BEEN TESTED AND CERTIFIED FOR PROPER OPERATION BY THE FIXTURE'S MANUFACTURER.

B. PROVIDE LIGHTING FIXTURES WITH TRIM COMPATIBLE WITH CEILING OR SURFACE ON OR IN WHICH INSTALLED.

C. EACH LUMINAIRE SHALL HAVE TWO SUPPORT WIRES INSTALLED, ONE ON EACH END, AT DIAGONAL CORNERS. LUMINAIRES IN FIRE RATED CEILINGS SHALL BE SUPPORTED ON ALL FOUR CORNERS.

D. SUPPORT AND SECURELY ATTACH WITH GALVANIZED FASTENERS IN A LEVEL POSITION.

E. INSTALL ACCORDING TO MANUFACTURER'S RECOMMENDATIONS.

F. FIRE RATED ASSEMBLIES, COMPLY WITH DETAILS OF LISTED ASSEMBLY.

2.14 TEMPORARY POWER

A. PROVIDE TEMPORARY POWER (SMALL TOOL) AND LIGHTING PER OSHA REQUIREMENTS.

STATE OF TEXAS
STEVE L. KANETZKY
84696
LICENSED
PROFESSIONAL ENGINEER

SKE
S. Kanetzky Engineering, LLC.
5920 W. William Cannon
Bldg. 7, Suite 200
Austin, Texas 78749
(512) 329-5774.
www.skaneng.com
TBPE Firm No. F-2356
SKE PROJECT # 2490920

DESIGNED BY:	DRAFTED BY:
SPC/RWH	RWH/TSE

DATE | REVISION

Carlson, Brigance & Doering, Inc.
FIRM ID #F3791
CBD
Civil Engineering ◆ Surveying
5501 West William Cannon ◆ Austin, Texas 78749
Phone No. (512) 280-5160 ◆ Fax No. (512) 280-5165

SHEET NAME: ELECTRICAL SPECIFICATIONS

JOB NAME: HOMESTEAD PHASE 3 BATCH DETENTION

PROJECT: STREET, DRAINAGE, WATER, AND WASTEWATER IMPROVEMENTS

DATE: AUGUST, 2020

JOB NUMBER: 5172

SHEET: 26 OF 61

SHEET NO.: E1.1

FILE PATH:K:\Projects\2020\2490920-CBD-Homestead Phase 3 Batch Detention\01 Design Phase_CAD\2490319-E11.dwg – Aug 10, 2020 – 2:07pm

1 E2.0 **ELECTRICAL OVERALL SITE PLAN**
SCALE: 1" = 100'

STATE OF TEXAS
STEVE L. KANETZKY
84696
LICENSED
PROFESSIONAL ENGINEER
8/10/20

SKE

S. Kanetzky
Engineering, LLC.
5920 W. William Cannon
Bldg. 7, Suite 200
Austin, Texas 78749
(512) 329-5774.
www.skaneng.com
TBPE Firm No. F-2356
SKE PROJECT # 2490920

DESIGNED BY:	DRAFTED BY:
SPC/RWH	RWH/TSE

REVISION	DATE

Carlson, Brigance & Doering, Inc.
FIRM ID #F3791
Civil Engineering ◆ Surveying
5501 West William Cannon ◆ Austin, Texas 78749
Phone No. (512) 280-5160 ◆ Fax No. (512) 280-5165

SHEET NAME: ELECTRICAL OVERALL SITE PLAN
JOB NAME: HOMESTEAD PHASE 3 BATCH DETENTION
PROJECT: STREET, DRAINAGE, WATER, AND WASTEWATER IMPROVEMENTS

DATE: AUGUST, 2020
JOB NUMBER: 5172
SHEET: 27 OF 61
SHEET NO.: E2.0

FILE PATH:K:\Projects\2020\2490920-CBD-Homestead Phase 3 Batch Detention\01 Design Phase_CAD\2490319-E20.dwg - Aug 10, 2020 - 2:07pm

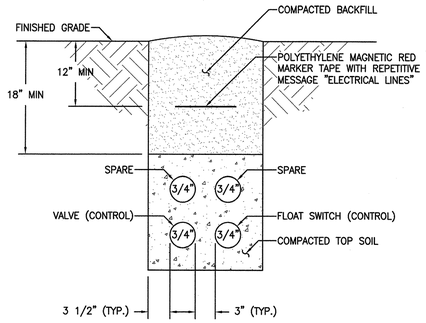

2 E2.1 **DETAIL - TRENCH SECTION A-A**
SCALE: NTS

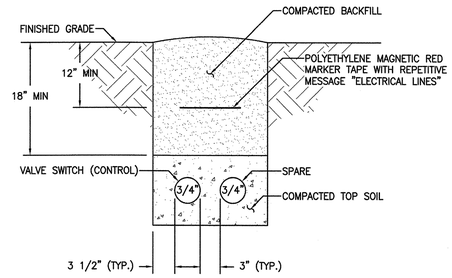

3 E2.1 **DETAIL - TRENCH SECTION B-B**
SCALE: NTS

REFERENCE NOTES

1. ELECTRICAL CONTRACTOR SHALL PROVIDE SOLAR POWERED VALVE CONTROL PANEL. SOLAR POWERED VALVE CONTROL PANEL AND SOLAR ARRAY TO BE PROVIDED BY THE DUDLEY COMPANY (830-372-4808) OR EQUAL. SEE SHEET E2.2 FOR VALVE CONTROL PANEL DETAILS.
2. ELECTRICAL CONTRACTOR SHALL PROVIDE AND INSTALL USE TYPE USE-2 SOLAR POWER CABLE IN 3/4" CONDUIT FROM SOLAR ARRAY TO VALVE CONTROL PANEL. PROVIDE AND INSTALL WEATHERPROOF MULTI CONTACT CONNECTOR MC-4 AT SOLAR ARRAY. TYPICAL.

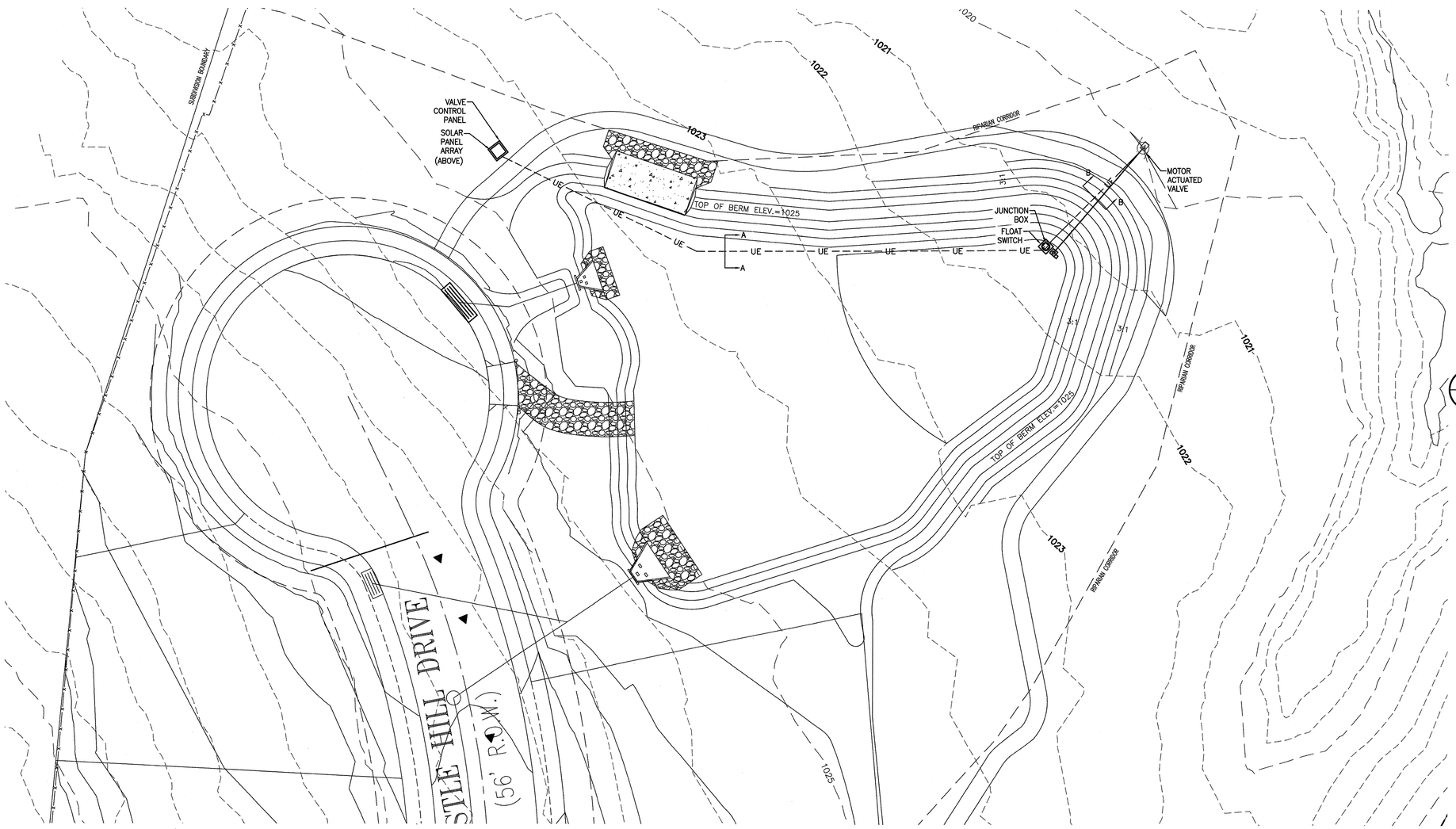

1 E2.1 **ELECTRICAL SITE PLAN - NEW BATCHPOND**
SCALE: 1" = 20'

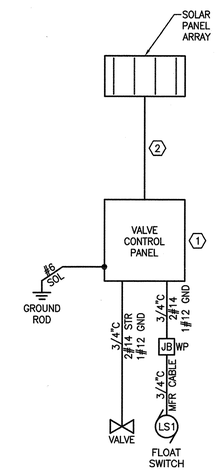

4 E2.1 **BATCH DETENTION BASIN/ ONE-LINE DIAGRAM**
SCALE: NTS

STATE OF TEXAS
STEVE L. KANETZKY
84696
LICENSED
PROFESSIONAL ENGINEER

SKE

S. Kanetzky Engineering, LLC.
5920 W. William Cannon
Bldg. 7, Suite 200
Austin, Texas 78749
(512) 329-5774.
www.skaneng.com
TBPE Firm No. F-2356

SKE PROJECT # 2490920

DESIGNED BY:	DRAFTED BY:
SPC/RWH	RWH/TSE

DATE	REVISION

Carlson, Brigance & Doering, Inc.
FIRM ID #F3791
Civil Engineering ◆ Surveying
5501 West William Cannon Dr. ◆ Austin, Texas 78749
Phone No. (512) 280-5160 ◆ Fax No. (512) 280-5165

SHEET NAME: ELECTRICAL SITE PLAN -NEW BATCH POND 1

JOB NAME: HOMESTEAD PHASE 3 BATCH DETENTION

PROJECT: STREET, DRAINAGE, WATER, AND WASTEWATER IMPROVEMENTS

DATE	AUGUST, 2020
JOB NUMBER	5172
SHEET	28 OF 61
SHEET NO.	E2.1

FILE PATH:K:\Projects\2020\2490920-CBD-Homestead Phase 3 Batch Detention\01 Design Phase_CAD\2490319-E21.dwg - Aug 10, 2020 - 2:07pm

REFERENCE NOTES

(1) ELECTRICAL CONTRACTOR TO PROVIDE SOLAR POWERED VALVE CONTROL PANEL. SOLAR POWERED VALVE CONTROL PANEL AND SOLAR ARRAY TO BE PROVIDED BY THE DUDLEY COMPANY (830-372-4808) OR EQUAL. SEE SHEET E2.2 FOR VALVE CONTROL PANEL DETAILS.

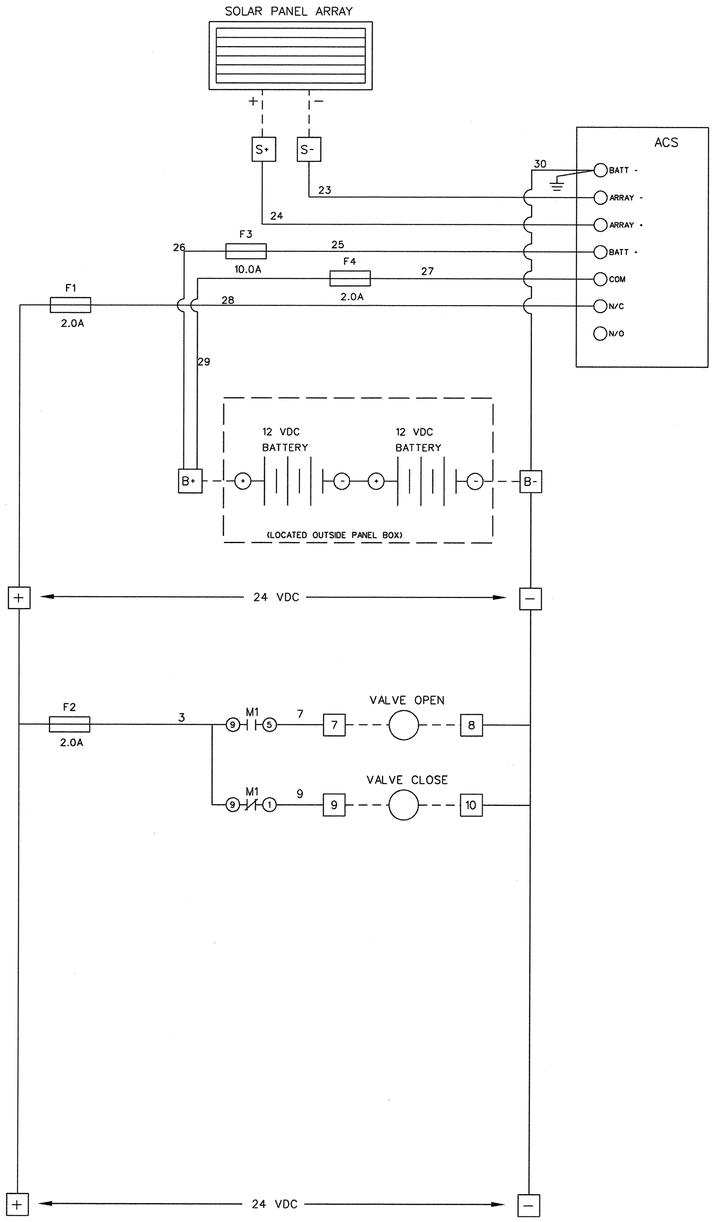

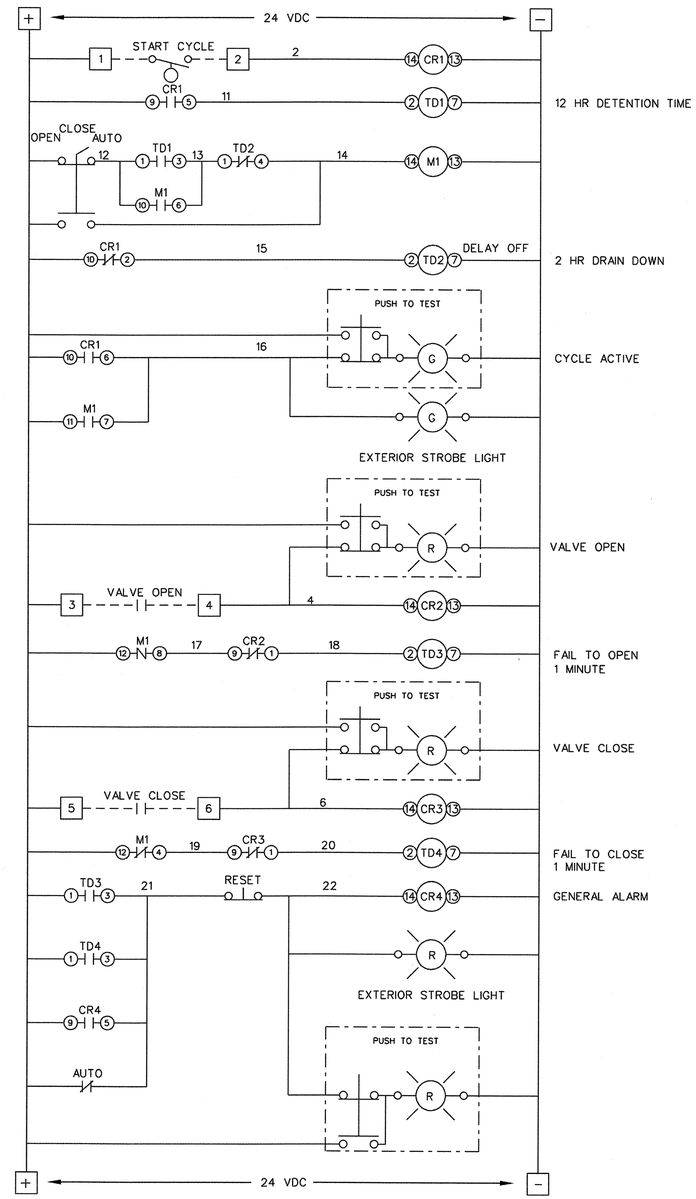

LEGEND

- TERMINAL INTERNAL TO CABINET
- INTERNAL PANEL WIRING
- EXTERNAL PANEL WIRING
- NORMALLY OPEN CONTACT
- NORMALLY CLOSED CONTACT
- FUSE
- CIRCUIT BREAKER
- RESISTOR
- POTENTIOMETER

WIRING KEY
24VDC
SUPPLY - BLUE #18 AWG
RETURN - GRAY #18 AWG

1 E2.2 **ELECTRICAL LADDER DIAGRAM** (1)
SCALE: NTS

STATE OF TEXAS
STEVE L. KANETZKY
84696
LICENSED PROFESSIONAL ENGINEER

SKE
S. Kanetzky Engineering, LLC.
5920 W. William Cannon
Bldg. 7, Suite 200
Austin, Texas 78749
(512) 329-5774.
www.skaneng.com
TBPE Firm No. F-2356
SKE PROJECT # 2490920

DESIGNED BY:	DRAFTED BY:
SPC/RWH	RWH/TSE

DATE | REVISION

Carlson, Brigance & Doering, Inc.
FIRM ID #F3791
Civil Engineering ◆ Surveying
5501 West William Cannon Dr. ◆ Austin, Texas 78749
Phone No. (512) 280-5160 ◆ Fax No. (512) 280-5165

SHEET NAME: ELECTRICAL LADDER DIAGRAM
JOB NAME: HOMESTEAD PHASE 3 BATCH DETENTION
PROJECT: STREET, DRAINAGE, WATER, AND WASTEWATER IMPROVEMENTS

DATE: AUGUST, 2020
JOB NUMBER: 5172
SHEET: 29 OF 61
SHEET NO.: E2.2

FILE PATH:K:\Projects\2020\2490920-CBD-Homestead Phase 3 Batch Detention\01 Design Phase_CAD\2490319-E22.dwg - Aug 10, 2020 - 2:07pm

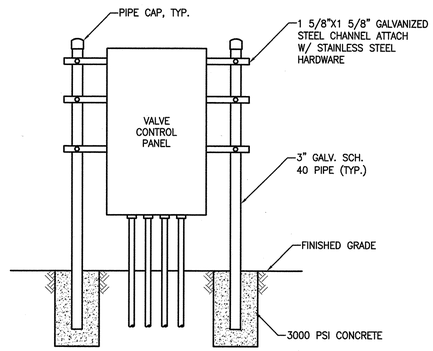

4 DETAIL - ELECTRICAL EQUIPMENT MOUNTING
E3.0 SCALE: NTS

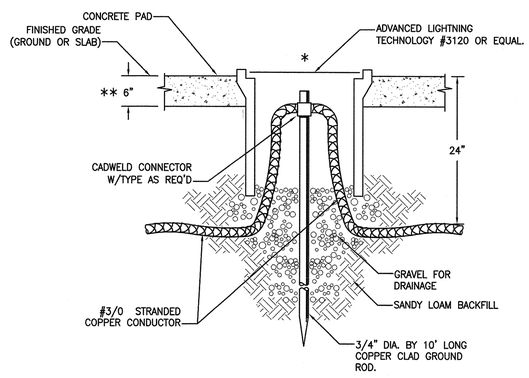

* INSTALL GROUND RODS AWAY FROM HEAVY TRAFFIC AREAS AND SIDEWALKS. COORDINATE EXACT LOCATION WITH CIVIL DRAWINGS.

** INSTALL 2'X2'X6" CONCRETE PAD.

3 DETAIL - 3/4" X 10' GROUND ROD
E3.0 SCALE: NTS

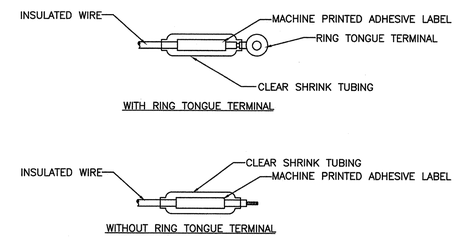

WHERE POSSIBLE RING TERMINALS SHALL BE USED. ONE OF THE ABOVE METHODS MUST BE USED ON ALL WIRE #8 AWG & SMALLER. THE SAME MUST ALSO BE USED ON LARGER WIRE UNLESS AN ALTERNATE METHOD IS SUBMITTED & APPROVED.

2 DETAIL - WIRE TERMINATION AND MARKING
E3.0 SCALE: NTS

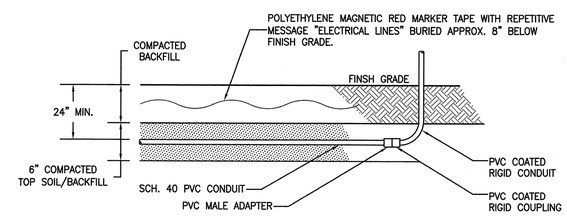

1 DETAIL - TYPICAL UNDERGROUND CONDUIT RUN
E3.0 SCALE: NTS

S. Kanetzky Engineering, LLC.
5920 W. William Cannon
Bldg. 7, Suite 200
Austin, Texas 78749
(512) 329-5774.
www.skaneng.com
TBPE Firm No. F-2356
SKE PROJECT # 2490920

DESIGNED BY:	DRAFTED BY:
SPC/RWH	RWH/TSE

DATE	REVISION

Carlson, Brigance & Doering, Inc.
FIRM ID #F3791
Civil Engineering ◆ Surveying
5501 Westbury Cove Dr. ◆ Austin, Texas 78749
Phone No. (512) 280-5160 ◆ Fax No. (512) 280-5165

SHEET NAME: ELECTRICAL D3TAILS

JOB NAME: HOMESTEAD PHASE 3 BATCH DETENTION

PROJECT: STREET, DRAINAGE, WATER, AND WASTEWATER IMPROVEMENTS

DATE	AUGUST, 2020
JOB NUMBER	5172
SHEET	30 OF 61
SHEET NO.	E3.0

FILE PATH:K:\Projects\2020\2490920-CBD-Homestead Phase 3 Batch Detention\01 Design Phase_CAD\2490319-E30.dwg – Aug 10, 2020 – 2:07pm

Curve Table: WLN A					
Curve #	Radius	Delta	Tangent	Chord	Arc Length
C1	251.00'	033°26'17"	75.39'	144.41'	146.48'
C2	275.98'	033°08'37"	82.12'	157.43'	159.64'

Curve Table: WLN C					
Curve #	Radius	Delta	Tangent	Chord	Arc Length

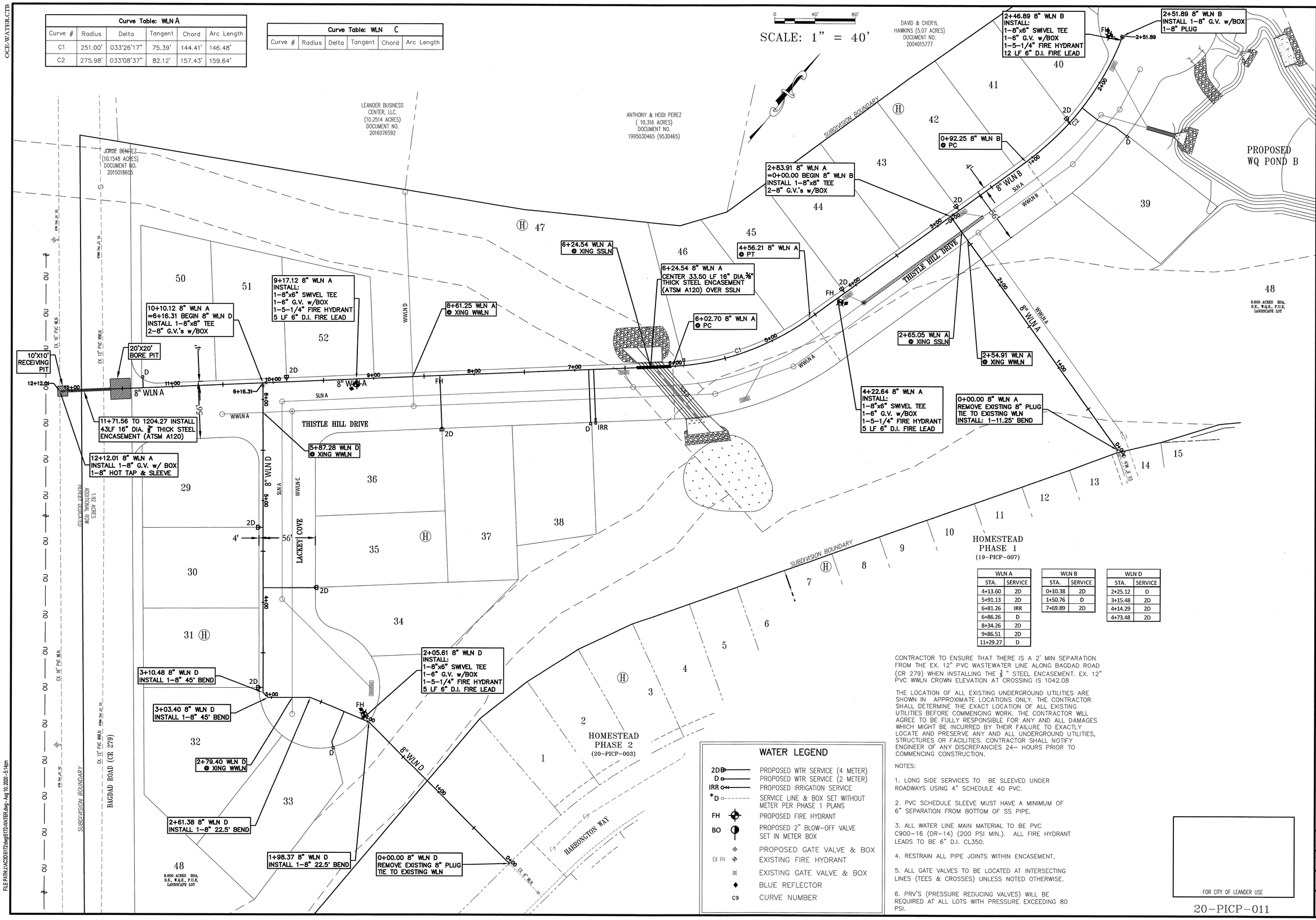

WLN A	
STA.	SERVICE
4+13.60	2D
5+91.13	2D
6+81.26	IRR
6+86.26	D
8+34.26	2D
9+86.51	2D
11+29.27	D

WLN B	
STA.	SERVICE
0+10.38	2D
1+50.76	D
7+69.89	2D

WLN D	
STA.	SERVICE
2+25.12	D
3+15.48	2D
4+14.29	2D
4+73.48	2D

CONTRACTOR TO ENSURE THAT THERE IS A 2' MIN SEPARATION FROM THE EX. 12" PVC WASTEWATER LINE ALONG BAGDAD ROAD (CR 279) WHEN INSTALLING THE 3/8" STEEL ENCASEMENT. EX. 12" PVC WWLN CROWN ELEVATION AT CROSSING IS 1042.08

THE LOCATION OF ALL EXISTING UNDERGROUND UTILITIES ARE SHOWN IN APPROXIMATE LOCATIONS ONLY. THE CONTRACTOR SHALL DETERMINE THE EXACT LOCATION OF ALL EXISTING UTILITIES BEFORE COMMENCING WORK. THE CONTRACTOR WILL AGREE TO BE FULLY RESPONSIBLE FOR ANY AND ALL DAMAGES WHICH MIGHT BE INCURRED BY THEIR FAILURE TO EXACTLY LOCATE AND PRESERVE ANY AND ALL UNDERGROUND UTILITIES, STRUCTURES OR FACILITIES. CONTRACTOR SHALL NOTIFY ENGINEER OF ANY DISCREPANCIES 24- HOURS PRIOR TO COMMENCING CONSTRUCTION.

NOTES:

1. LONG SIDE SERVICES TO BE SLEEVED UNDER ROADWAYS USING 4" SCHEDULE 40 PVC.

2. PVC SCHEDULE SLEEVE MUST HAVE A MINIMUM OF 6" SEPARATION FROM BOTTOM OF SS PIPE.

3. ALL WATER LINE MAIN MATERIAL TO BE PVC C900-16 (DR-14) (200 PSI MIN.). ALL FIRE HYDRANT LEADS TO BE 6" D.I. CL350.

4. RESTRAIN ALL PIPE JOINTS WITHIN ENCASEMENT.

5. ALL GATE VALVES TO BE LOCATED AT INTERSECTING LINES (TEES & CROSSES) UNLESS NOTED OTHERWISE.

6. PRV'S (PRESSURE REDUCING VALVES) WILL BE REQUIRED AT ALL LOTS WITH PRESSURE EXCEEDING 80 PSI.

WATER LEGEND

2D	PROPOSED WTR SERVICE (4 METER)
D	PROPOSED WTR SERVICE (2 METER)
IRR	PROPOSED IRRIGATION SERVICE
*D	SERVICE LINE & BOX SET WITHOUT METER PER PHASE 1 PLANS
FH	PROPOSED FIRE HYDRANT
BO	PROPOSED 2" BLOW-OFF VALVE SET IN METER BOX
	PROPOSED GATE VALVE & BOX
EX FH	EXISTING FIRE HYDRANT
	EXISTING GATE VALVE & BOX
	BLUE REFLECTOR
C9	CURVE NUMBER

FOR CITY OF LEANDER USE

20-PICP-011

DESIGNED BY: LAW
DRAFTED BY: ZHL & CMC

REVISION	DATE
INITIAL SUBMITTAL	03.24.20
UPDATE #1 SUBMITTAL	05.18.20
UPDATE #2 SUBMITTAL	07.28.20

Carlson, Brigance & Doering, Inc.
Civil Engineering ◆ Surveying
FIRM ID #F3791
Main Office: 5501 West William Cannon Dr. Austin, Texas 78749
North Office: 12129 RR 620 N., Ste. 600 Austin, Texas 78750
Phone No. (512) 280-5160 Fax No. (512) 280-5165

SHEET NAME: WATER DISTRIBUTION PLAN
JOB NAME: HOMESTEAD PHASE 3
PROJECT: STREET, DRAINAGE, WATER, AND WASTEWATER IMPROVEMENTS

8/10/2020
STATE OF TEXAS
LEE A. WHITED
102471
LICENSED PROFESSIONAL ENGINEER
CARLSON, BRIGANCE & DOERING, INC.
ID# F3791

DATE: NOVEMBER 2019
JOB NUMBER: 5172
SHEET: 31 OF 61
SHEET NO.: 31

OCE-WATER.CTB
FILE PATH: J:\ACAD\5172\dwg\5172-WATER.dwg - Aug 10, 2020 - 5:14pm

OCE-WASTE.CTB

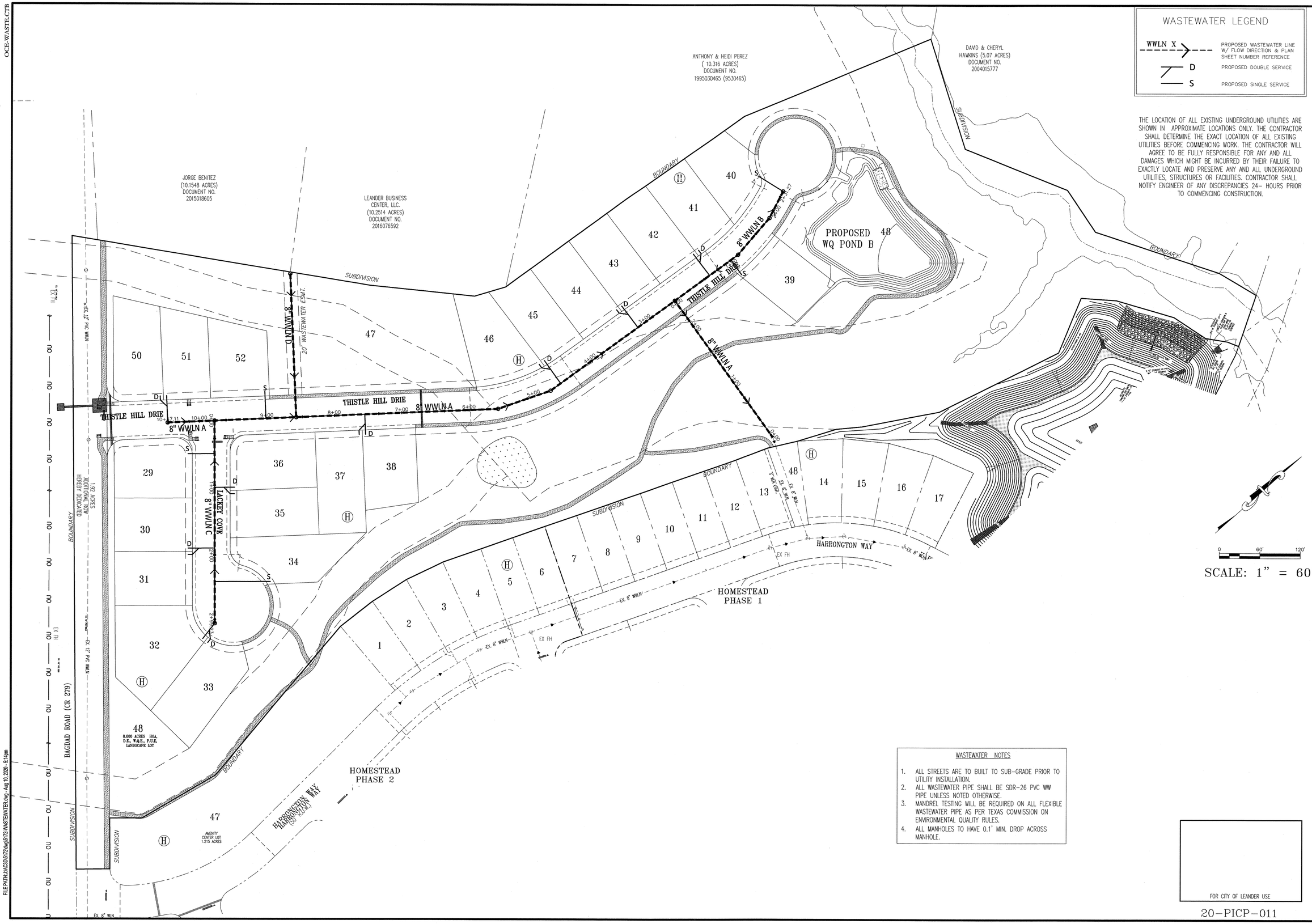

THE LOCATION OF ALL EXISTING UNDERGROUND UTILITIES ARE SHOWN IN APPROXIMATE LOCATIONS ONLY. THE CONTRACTOR SHALL DETERMINE THE EXACT LOCATION OF ALL EXISTING UTILITIES BEFORE COMMENCING WORK. THE CONTRACTOR WILL AGREE TO BE FULLY RESPONSIBLE FOR ANY AND ALL DAMAGES WHICH MIGHT BE INCURRED BY THEIR FAILURE TO EXACTLY LOCATE AND PRESERVE ANY AND ALL UNDERGROUND UTILITIES, STRUCTURES OR FACILITIES. CONTRACTOR SHALL NOTIFY ENGINEER OF ANY DISCREPANCIES 24- HOURS PRIOR TO COMMENCING CONSTRUCTION.

WASTEWATER NOTES

1. ALL STREETS ARE TO BUILT TO SUB-GRADE PRIOR TO UTILITY INSTALLATION.
2. ALL WASTEWATER PIPE SHALL BE SDR-26 PVC WW PIPE UNLESS NOTED OTHERWISE.
3. MANDREL TESTING WILL BE REQUIRED ON ALL FLEXIBLE WASTEWATER PIPE AS PER TEXAS COMMISSION ON ENVIRONMENTAL QUALITY RULES.
4. ALL MANHOLES TO HAVE 0.1' MIN. DROP ACROSS MANHOLE.

FOR CITY OF LEANDER USE

20-PICP-011

DESIGNED BY:	DRAFTED BY:
LAW	ZHL & CMC

REVISION	DATE
INITIAL SUBMITTAL	03.24.20
UPDATE #1 SUBMITTAL	05.18.20
UPDATE #2 SUBMITTAL	07.28.20

Carlson, Brigance & Doering, Inc.
Civil Engineering ◆ Surveying
FIRM ID #F3791
Main Office: 5501 West William Cannon Dr. Austin, Texas 78749
North Office: 12129 RR 620 N., Ste. 600 Austin, Texas 78750
Phone No. (512) 280-5160 Fax No. (512) 280-5165

SHEET NAME: OVERALL WASTEWATER COLLECTION PLAN

JOB NAME: HOMESTEAD PHASE 3

PROJECT: STREET, DRAINAGE, WATER, AND WASTEWATER IMPROVEMENTS

8/10/2020

STATE OF TEXAS
LEE A. WHITED
102471
LICENSED
PROFESSIONAL ENGINEER
CARLSON, BRIGANCE & DOERING, INC.
ID# F3791

DATE	NOVEMBER 2019
JOB NUMBER	5172
SHEET	32 OF 61
SHEET NO.	32

FILE PATH:J:\ACD\5172\dwg\5172-WASTEWATER.dwg - Aug 10, 2020 - 5:14pm

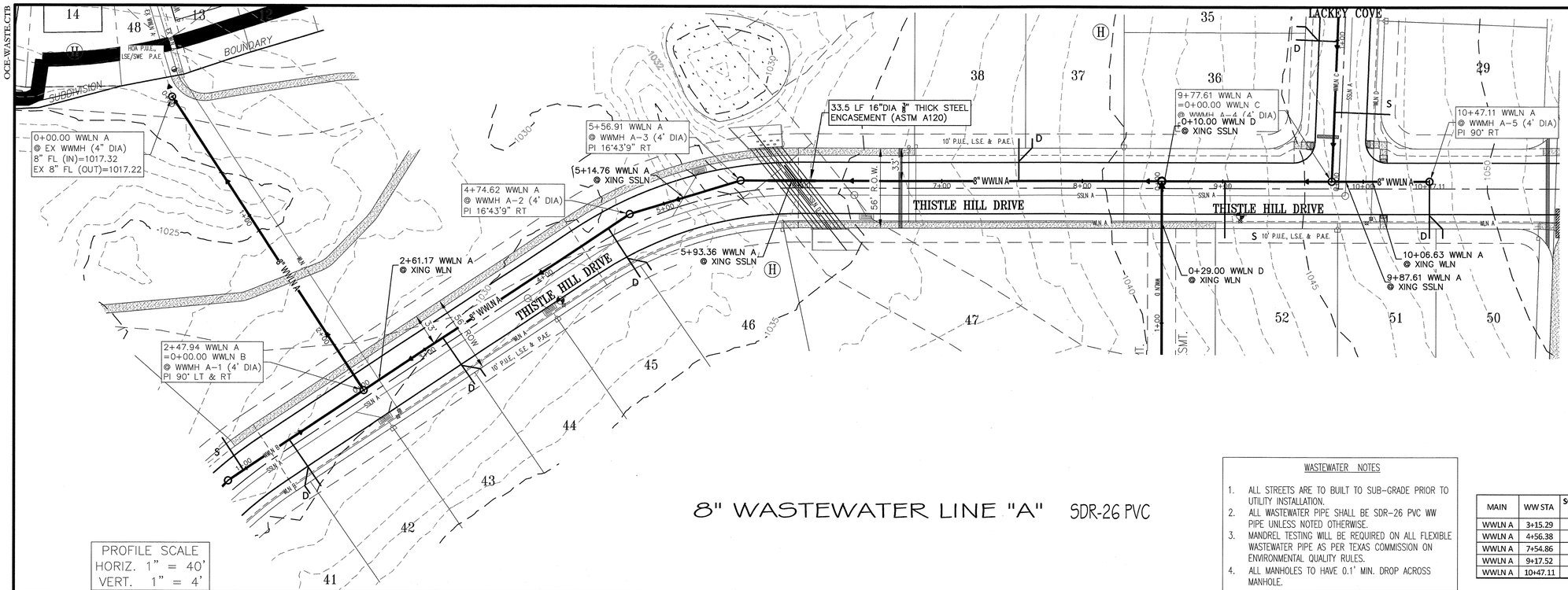

8" WASTEWATER LINE "A" SDR-26 PVC

WASTEWATER LEGEND

- PROPOSED WASTEWATER LINE WITH 4' DIA MANHOLE
- DIRECTIONAL ARROW
- D — PROPOSED DOUBLE WW SERVICE
- S — PROPOSED SINGLE WW SERVICE
- PROPOSED (2) DOUBLE WTR SERVICE (4 METERS) – DUPLEX LOTS
- PROPOSED SINGLE WTR SERVICE
- PROPOSED IRRIGATION SERVICE

THE LOCATION OF ALL EXISTING UNDERGROUND UTILITIES ARE SHOWN IN APPROXIMATE LOCATIONS ONLY. THE CONTRACTOR SHALL DETERMINE THE EXACT LOCATION OF ALL EXISTING UTILITIES BEFORE COMMENCING WORK. THE CONTRACTOR WILL AGREE TO BE FULLY RESPONSIBLE FOR ANY AND ALL DAMAGES WHICH MIGHT BE INCURRED BY THEIR FAILURE TO EXACTLY LOCATE AND PRESERVE ANY AND ALL UNDERGROUND UTILITIES, STRUCTURES OR FACILITIES. CONTRACTOR SHALL NOTIFY ENGINEER OF ANY DISCREPANCIES 24– HOURS PRIOR TO COMMENCING CONSTRUCTION.

WASTEWATER NOTES

1. ALL STREETS ARE TO BUILT TO SUB-GRADE PRIOR TO UTILITY INSTALLATION.
2. ALL WASTEWATER PIPE SHALL BE SDR-26 PVC WW PIPE UNLESS NOTED OTHERWISE.
3. MANDREL TESTING WILL BE REQUIRED ON ALL FLEXIBLE WASTEWATER PIPE AS PER TEXAS COMMISSION ON ENVIRONMENTAL QUALITY RULES.
4. ALL MANHOLES TO HAVE 0.1' MIN. DROP ACROSS MANHOLE.

MAIN	WW STA	SGL OR DBL SERVICE
WWLN A	3+15.29	D
WWLN A	4+56.38	D
WWLN A	7+54.86	D
WWLN A	9+17.52	S
WWLN A	10+47.11	D

SCALE: 1" = 40'

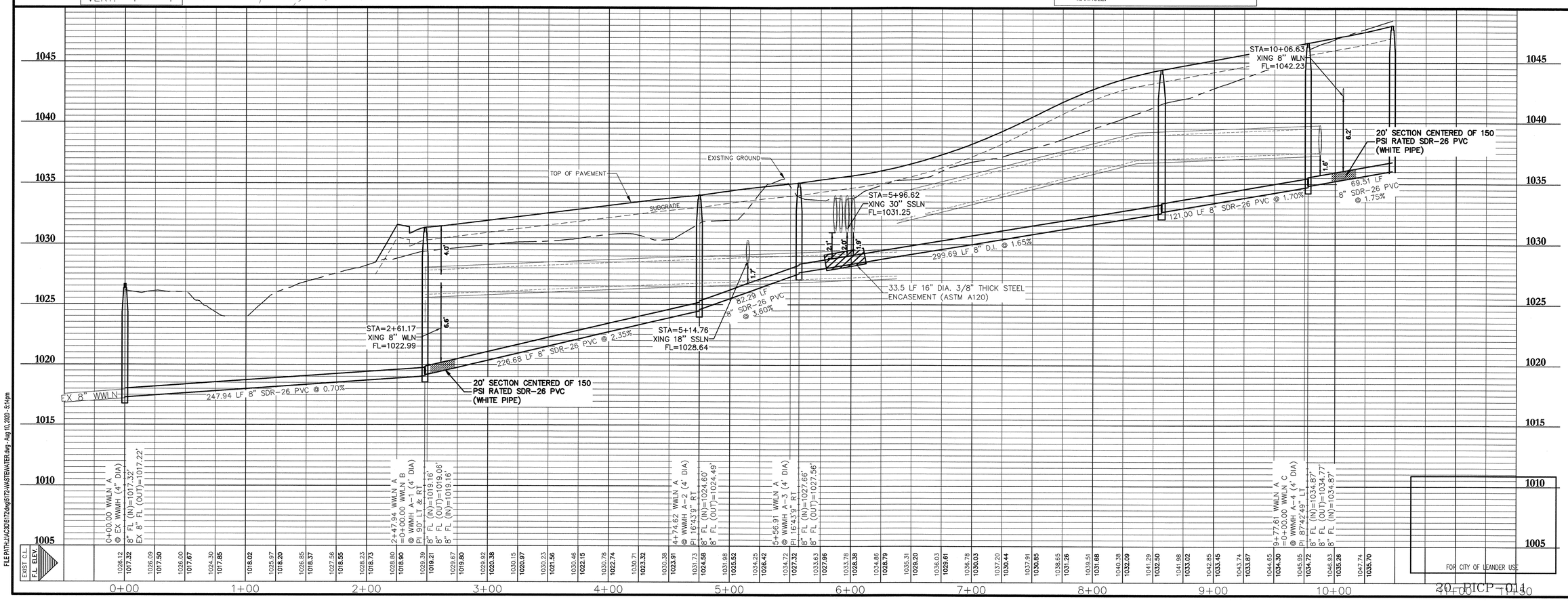

FOR CITY OF LEANDER USE

20-PICP-014

DESIGNED BY: LAW
DRAFTED BY: ZHL & CMC

REVISION	DATE
INITIAL SUBMITTAL	03.24.20
UPDATE #1 SUBMITTAL	05.18.20
UPDATE #2 SUBMITTAL	07.28.20

Carlson, Brigance & Doering, Inc.
Civil Engineering ◆ Surveying
FIRM ID #F3791
Main Office: 3501 West William Cannon Dr. Austin, Texas 78749 Phone No. (512) 280-5160
North Office: 12129 RR 620 N., Ste. 600 Austin, Texas 78750 Fax No. (512) 280-5165

SHEET NAME: WASTEWATER LINE 'A' PLAN & PROFILE (0+00 TO END)
JOB NAME: HOMESTEAD PHASE 3
PROJECT: STREET, DRAINAGE, WATER, AND WASTEWATER IMPROVEMENTS

8/10/2020
STATE OF TEXAS
LEE A. WHITED
102471
LICENSED PROFESSIONAL ENGINEER
CARLSON, BRIGANCE & DOERING, INC.
ID# F3791

DATE: NOVEMBER 2019
JOB NUMBER: 5172
SHEET: 33 OF 61
SHEET NO.: 33

OCE-WASTE.CTB
FILE PATH:J:\ACSD\5172\dwg\5172-WASTEWATER.dwg - Aug 10, 2020 - 5:14pm

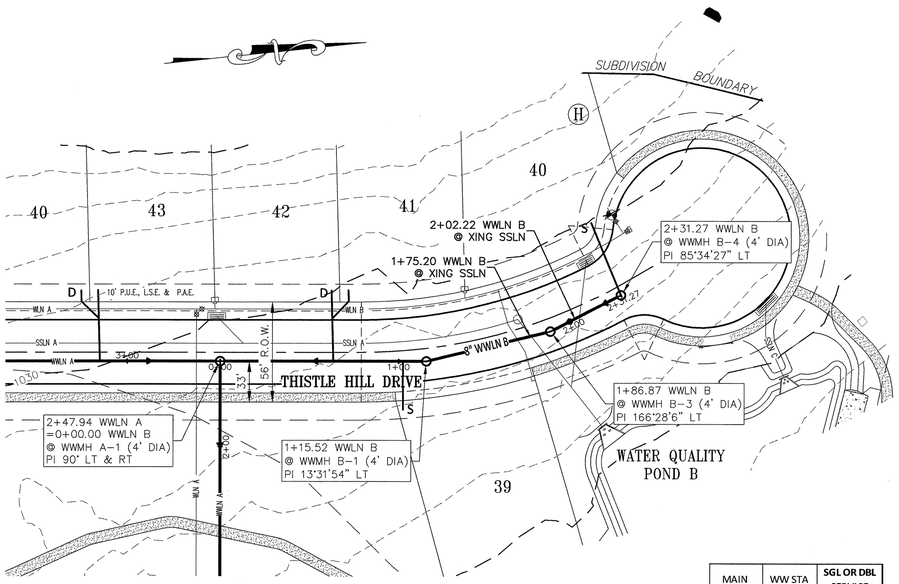

8" WASTEWATER LINE "B" SDR-26 PVC

MAIN	WW STA	SGL OR DBL SERVICE
WWLN B	0+63.36	D
WWLN B	1+02.45	S
WWLN B	2+31.27	S

PROFILE SCALE
HORIZ. 1" = 40'
VERT. 1" = 4'

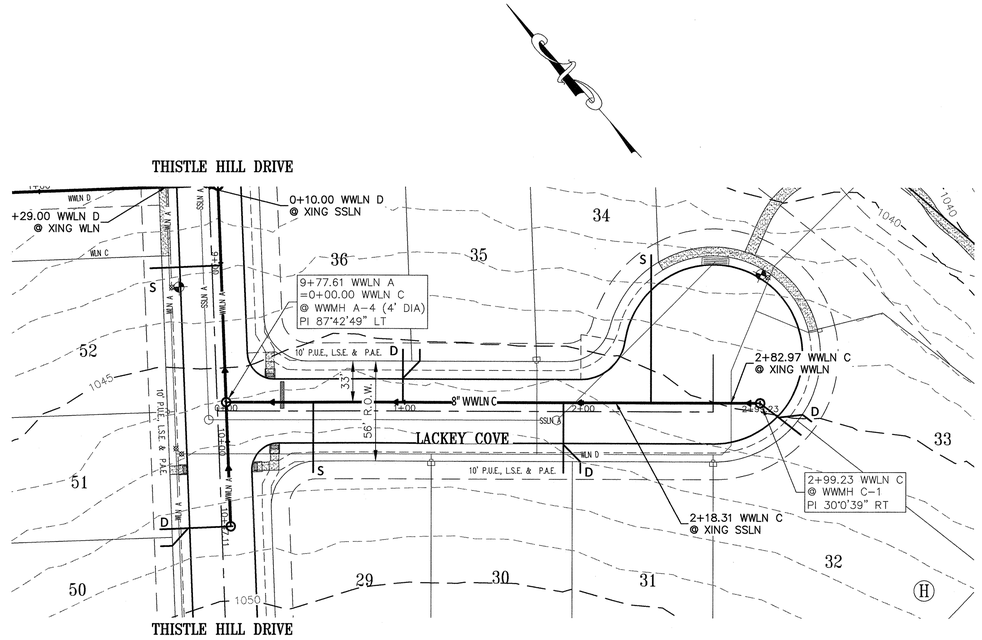

8" WASTEWATER LINE "C" SDR-26 PVC

MAIN	WW STA	SGL OR DBL SERVICE
WWLN C	0+48.81	S
WWLN C	0+99.00	D
WWLN C	1+88.97	D
WWLN C	2+37.96	S
WWLN C	2+99.23	D

WASTEWATER LEGEND

- PROPOSED WASTEWATER LINE WITH 4' DIA MANHOLE
- DIRECTIONAL ARROW
- D — PROPOSED DOUBLE WW SERVICE
- S — PROPOSED SINGLE WW SERVICE
- PROPOSED (2) DOUBLE WTR SERVICE (4 METERS) – DUPLEX LOTS
- PROPOSED SINGLE WTR SERVICE
- PROPOSED IRRIGATION SERVICE

THE LOCATION OF ALL EXISTING UNDERGROUND UTILITIES ARE SHOWN IN APPROXIMATE LOCATIONS ONLY. THE CONTRACTOR SHALL DETERMINE THE EXACT LOCATION OF ALL EXISTING UTILITIES BEFORE COMMENCING WORK. THE CONTRACTOR WILL AGREE TO BE FULLY RESPONSIBLE FOR ANY AND ALL DAMAGES WHICH MIGHT BE INCURRED BY THEIR FAILURE TO EXACTLY LOCATE AND PRESERVE ANY AND ALL UNDERGROUND UTILITIES, STRUCTURES OR FACILITIES. CONTRACTOR SHALL NOTIFY ENGINEER OF ANY DISCREPANCIES 24– HOURS PRIOR TO COMMENCING CONSTRUCTION.

0 40' 80'
SCALE: 1" = 40'

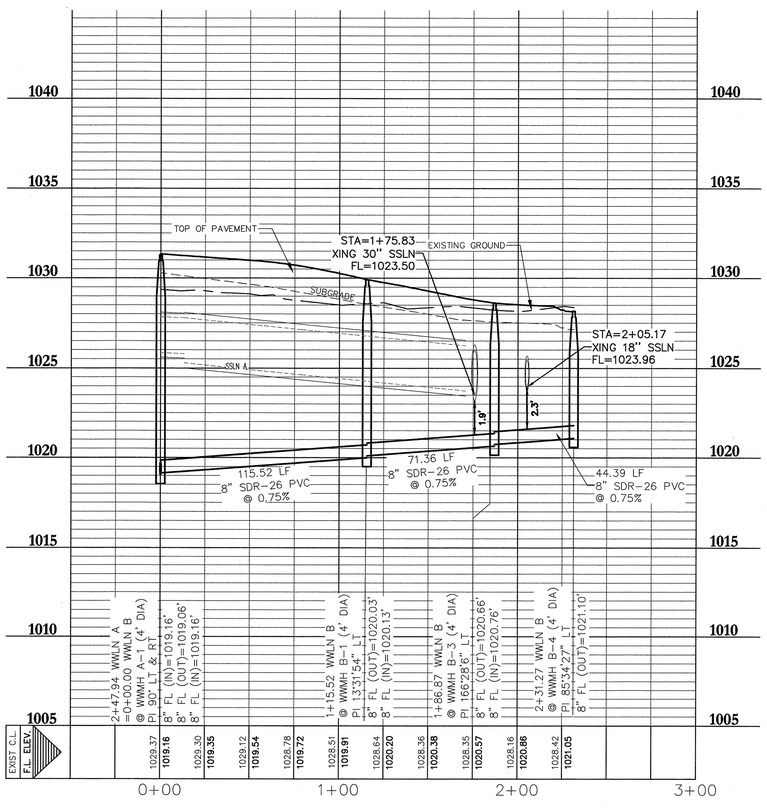

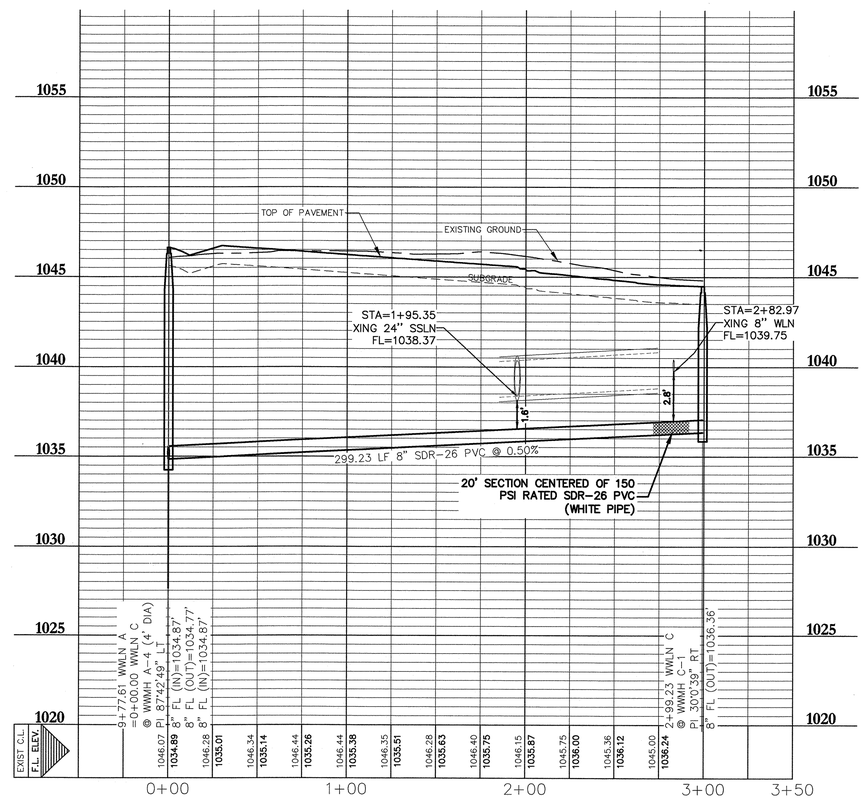

WASTEWATER NOTES

1. ALL STREETS ARE TO BUILT TO SUB-GRADE PRIOR TO UTILITY INSTALLATION.
2. ALL WASTEWATER PIPE SHALL BE SDR-26 PVC WW PIPE UNLESS NOTED OTHERWISE.
3. MANDREL TESTING WILL BE REQUIRED ON ALL FLEXIBLE WASTEWATER PIPE AS PER TEXAS COMMISSION ON ENVIRONMENTAL QUALITY RULES.
4. ALL MANHOLES TO HAVE 0.1' MIN. DROP ACROSS MANHOLE.

FOR CITY OF LEANDER USE

20–PICP–011

DESIGNED BY:	DRAFTED BY:
LAW	ZHL & CMC

REVISION	DATE
INITIAL SUBMITTAL	03.24.20
UPDATE #1 SUBMITTAL	05.18.20
UPDATE #2 SUBMITTAL	07.28.20

Carlson, Brigance & Doering, Inc.
Civil Engineering ◆ Surveying
FIRM ID #F3791
Main Office: 3501 West William Cannon Dr. Austin, Texas 78749
North Office: 12129 RR 620 N., Ste. 600 Austin, Texas 78750
Phone No. (512) 280-5160 Fax No. (512) 280-5165

SHEET NAME: WASTEWATER LINE 'B' & 'C' PLAN & PROFILE (0+00 TO END)
JOB NAME: HOMESTEAD PHASE 3
PROJECT: STREET, DRAINAGE, WATER, AND WASTEWATER IMPROVEMENTS

8/10/2020
STATE OF TEXAS
LEE A. WHITED
102471
LICENSED PROFESSIONAL ENGINEER
CARLSON, BRIGANCE & DOERING, INC.
ID# F3791

DATE: NOVEMBER 2019
JOB NUMBER: 5172
SHEET: 34 OF 61
SHEET NO.: 34

OCE-WASTE.CTB
FILE PATH:J:\AC20\5172\dwg\5172-WASTEWATER.dwg - Aug 10, 2020 - 5:13pm

OCE-WASTE.CTB

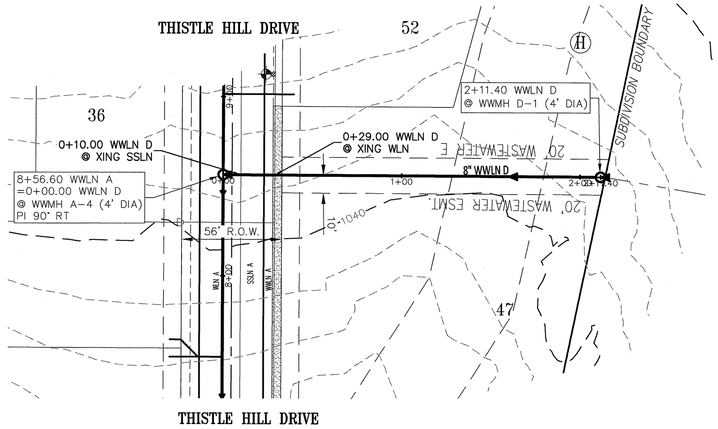

8" WASTEWATER LINE "D" SDR-26 PVC

PROFILE SCALE
HORIZ. 1" = 40'
VERT. 1" = 4'

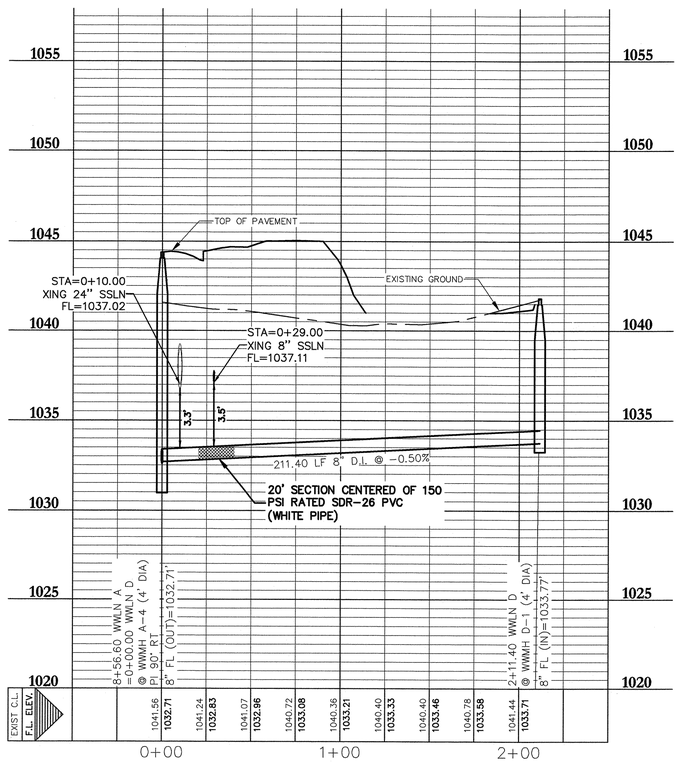

WASTEWATER LEGEND

- PROPOSED WASTEWATER LINE WITH 4' DIA MANHOLE
- DIRECTIONAL ARROW
- D — PROPOSED DOUBLE WW SERVICE
- S — PROPOSED SINGLE WW SERVICE
- PROPOSED (2) DOUBLE WTR SERVICE (4 METERS) – DUPLEX LOTS
- PROPOSED SINGLE WTR SERVICE
- PROPOSED IRRIGATION SERVICE

THE LOCATION OF ALL EXISTING UNDERGROUND UTILITIES ARE SHOWN IN APPROXIMATE LOCATIONS ONLY. THE CONTRACTOR SHALL DETERMINE THE EXACT LOCATION OF ALL EXISTING UTILITIES BEFORE COMMENCING WORK. THE CONTRACTOR WILL AGREE TO BE FULLY RESPONSIBLE FOR ANY AND ALL DAMAGES WHICH MIGHT BE INCURRED BY THEIR FAILURE TO EXACTLY LOCATE AND PRESERVE ANY AND ALL UNDERGROUND UTILITIES, STRUCTURES OR FACILITIES. CONTRACTOR SHALL NOTIFY ENGINEER OF ANY DISCREPANCIES 24– HOURS PRIOR TO COMMENCING CONSTRUCTION.

0 40' 80'

SCALE: 1" = 40'

WASTEWATER NOTES

1. ALL STREETS ARE TO BUILT TO SUB-GRADE PRIOR TO UTILITY INSTALLATION.
2. ALL WASTEWATER PIPE SHALL BE SDR-26 PVC WW PIPE UNLESS NOTED OTHERWISE.
3. MANDREL TESTING WILL BE REQUIRED ON ALL FLEXIBLE WASTEWATER PIPE AS PER TEXAS COMMISSION ON ENVIRONMENTAL QUALITY RULES.
4. ALL MANHOLES TO HAVE 0.1' MIN. DROP ACROSS MANHOLE.

FOR CITY OF LEANDER USE

20–PICP–011

DESIGNED BY:	DRAFTED BY:
LAW	ZHL & CMC

REVISION	DATE
INITIAL SUBMITTAL	03.24.20
UPDATE #1 SUBMITTAL	05.18.20
UPDATE #2 SUBMITTAL	07.28.20

Carlson, Brigance & Doering, Inc.
Civil Engineering ◆ Surveying
FIRM ID #F3791
Main Office: 5501 West William Cannon Dr. Austin, Texas 78749
Phone No. (512) 280-5160
North Office: 12120 RR 620 N., Ste. 600 Austin, Texas 78750
Fax No. (512) 280-5165

SHEET NAME: WASTEWATER LINE 'D' PLAN & PROFILE (0+00 TO END)

JOB NAME: HOMESTEAD PHASE 3

PROJECT: STREET, DRAINAGE, WATER, AND WASTEWATER IMPROVEMENTS

8/10/2020

STATE OF TEXAS
LEE A. WHITED
102471
LICENSED PROFESSIONAL ENGINEER
CARLSON, BRIGANCE & DOERING, INC.
ID# F3791

DATE: NOVEMBER 2019

JOB NUMBER: 5172

SHEET: 35 OF 61

SHEET NO.: 35

FILE PATH:J:\JC30\5172\dwg\5172-WASTEWATER.dwg - Aug 10, 2020 - 5:13pm

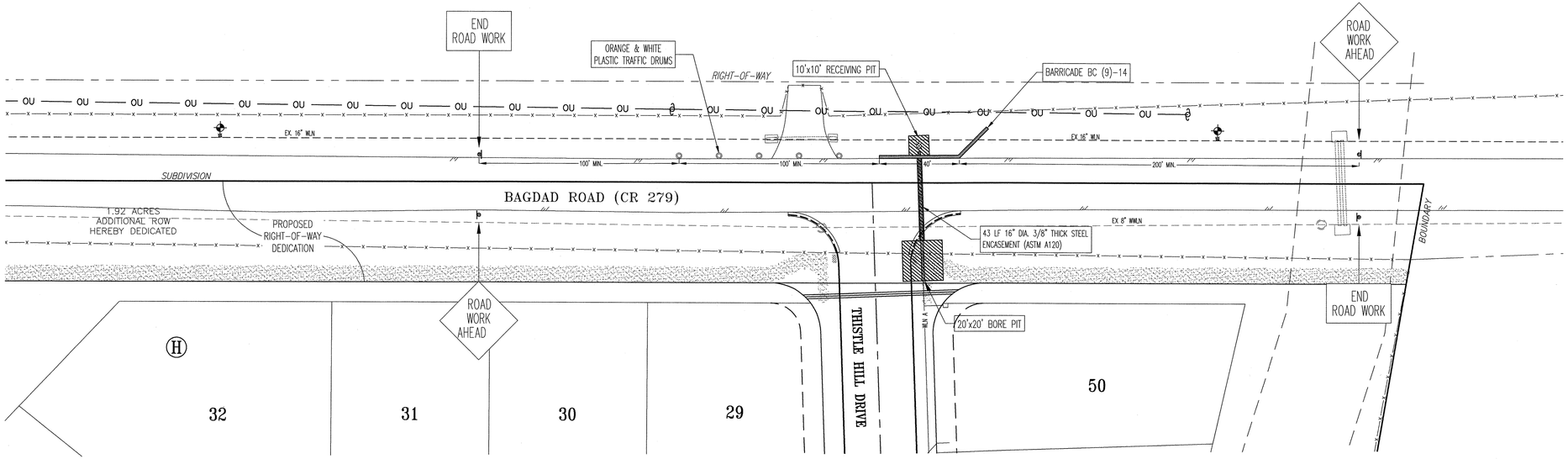

BAGDAD ROAD (CR 279) @ THISTLE HILL DRIVE
8" WATERLINE 'A' ROAD BORE

WORK IS LIMITED TO BETWEEN
9:00 AM AND 3:00 PM

0 30 60'

SCALE: 1" = 30'

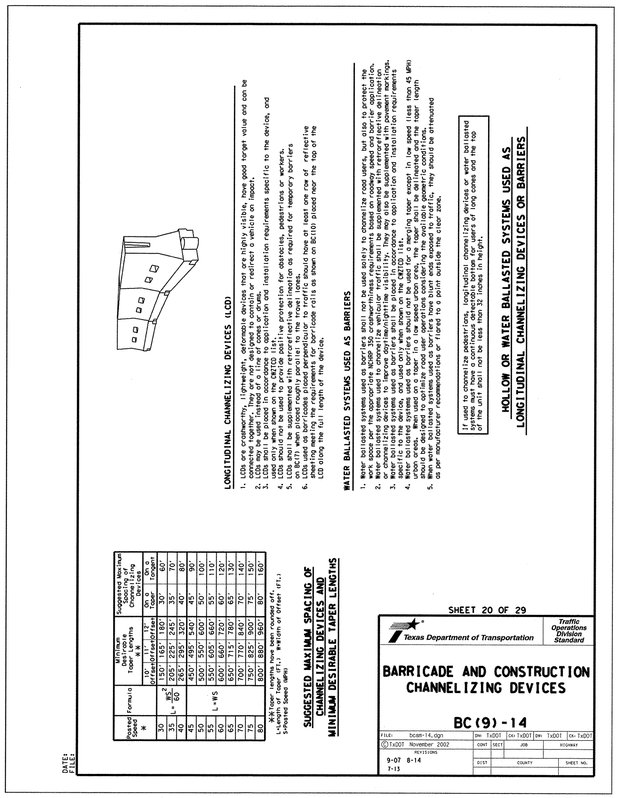

DATE:
FILE:

Posted Speed *	Formula	Minimum Spacing of Channelizing Devices		Suggested Maximum Spacing of Channelizing Devices	
		Freeway/Expressway		On a Freeway	On a Expressway
30	$L = \frac{WS^2}{60}$	150'	165'	30'	60'
35		205'	225'	35'	70'
40		265'	295'	40'	80'
45		330'	365'	45'	90'
50		410'	450'	50'	100'
55		500'	550'	55'	110'
60		600'	660'	60'	120'
65		650'	715'	65'	130'
70		700'	770'	70'	140'
75		750'	825'	75'	150'
80		800'	880'	80'	160'

* Posted speeds have been rounded off.
L=Length of taper (ft. Tapers of greater ft.)
W=Width (offset distance)
S=Posted Speed (MPH)

SUGGESTED MAXIMUM SPACING OF CHANNELIZING DEVICES AND MINIMUM DESIRABLE TAPER LENGTHS

LONGITUDINAL CHANNELIZING DEVICES (LCD)

1. LCDs are crashworthy, lightweight, deformable devices that are highly visible, have good target value and can be economically placed and moved. They are effective in controlling traffic in a variety of conditions.
2. LCDs may be used instead of a line of cones or drums.
3. LCDs may be used in according to application and installation requirements specific to the device, and used only when shown on the ONTCD 114.
4. LCDs should be placed in accordance with the appropriate taper requirements.
5. LCDs shall be supplemented with retroreflective delineation as required for nighttime operations on BC(7) when placed roughly parallel to the travel lanes.
6. When used as part of a temporary traffic control zone, the LCD should have at least one row of reflective sheeting meeting the requirements for barricade rails as shown on BC(10) placed near the top of the LCD along the full length of the device.

WATER BALLASTED SYSTEMS USED AS BARRIERS

1. Water ballasted systems used as barriers shall not be used solely to channelize road users, but also to protect the work space. Use of water ballasted systems shall be in accordance with the appropriate NCHRP 350 crashworthiness requirements based on roadway speed and barrier application.
2. Water ballasted systems shall be placed in the appropriate configuration and installation requirements based on the application, and shall be used only when shown on the ONTCD 114.
3. Water ballasted systems shall be placed in accordance to application and installation requirements specific to the device, and used only when shown on the ONTCD 114.
4. Water ballasted systems used as barriers should not be used for a merging taper except in low speed (less than 45 MPH) locations where space is limited. In these locations, the barriers should be placed in a tangent alignment and should be designed to optimize road user operations considering the available geometric conditions.
5. Water ballasted systems used as barriers in the merging area should be filled with water and the top of the barrier should be at least 32 inches in height. They should be mounted as per manufacturer recommendations or tipped to a point outside the clear zone.

If used to channelize pedestrians, longitudinal channelizing devices or water ballasted systems shall have a continuous or semi-continuous barrier with a top rail or top board not less than 32 inches in height.

HOLLOW OR WATER BALLASTED SYSTEMS USED AS LONGITUDINAL CHANNELIZING DEVICES OR BARRIERS

SHEET 20 OF 29

Texas Department of Transportation — Traffic Operations Division Standard

BARRICADE AND CONSTRUCTION CHANNELIZING DEVICES

BC(9)-14

FILE: bcom-14.dgn	DN: TxDOT	CK: TxDOT	DW: TxDOT	CK: TxDOT
©TxDOT November 2002	CONT	SECT	JOB	HIGHWAY
REVISIONS 9-07 8-14 7-13	DIST		COUNTY	SHEET NO.

FILE PATH:J:\AC20\5172\dwg\5172-TRAFFIC CONTROL.dwg-Aug 10, 2020- 5:13pm

OCE-ENGINEERING.CTB

REVISION	DATE
INITIAL SUBMITTAL	03.24.20
UPDATE #1 SUBMITTAL	05.18.20
UPDATE #2 SUBMITTAL	07.28.20

DESIGNED BY: LAW

DRAFTED BY: ZHL & CMC

Carlson, Brigance & Doering, Inc.
Civil Engineering ◆ Surveying
FIRM ID #F3791
Main Office: 5501 West William Cannon Dr. Austin, Texas 78749 Phone No. (512) 280-5160
North Office: 12129 RR 620 N., Ste. 600 Austin, Texas 78750 Fax No. (512) 280-5165

SHEET NAME: TRAFFIC CONTROL PLAN

JOB NAME: HOMESTEAD PHASE 3

PROJECT: STREET, DRAINAGE, WATER, AND WASTEWATER IMPROVEMENTS

8/10/2020

STATE OF TEXAS — LEE A. WHITED — 102471 — LICENSED PROFESSIONAL ENGINEER

CARLSON, BRIGANCE & DOERING, INC. ID# F3791

DATE: NOVEMBER 2019

JOB NUMBER: 5172

SHEET: 36 OF 61

SHEET NO.: 36

FOR CITY OF LEANDER USE

20-PICP-011

OCE-ENGINEERING.CTB

DISCLAIMER: The use of this standard is governed by the "Texas Engineering Practice Act". No warranty of any kind is made by TxDOT for any purpose whatsoever. TxDOT assumes no responsibility for the conversion of this standard to other formats or for incorrect results or damages resulting from its use.

BARRICADE AND CONSTRUCTION (BC) STANDARD SHEETS GENERAL NOTES:

1. The Barricade and Construction Standard Sheets (BC sheets) are intended to show typical examples for placement of temporary traffic control devices, construction pavement markings, and typical work zone signs. The information contained in these sheets meet or exceed the requirements shown in the "Texas Manual on Uniform Traffic Control Devices" (TMUTCD).
2. The development and design of the Traffic Control Plan (TCP)is the responsibility of the Engineer.
3. The Contractor may propose changes to the TCP that are signed and sealed by a licensed professional engineer for approval. The Engineer may develop, sign and seal Contractor proposed changes.
4. The Contractor is responsible for installing and maintaining the traffic control devices as shown in the plans. The Contractor may not move or change the approximate location of any device without the approval of the Engineer.
5. Geometric design of lane shifts and detours should, when possible, meet the applicable design criteria contained in manuals such as the American Association of State Highway and Transportation Officials (AASHTO), "A Policy on Geometric Design of Highways and Streets," the TxDOT "Roadway Design Manual" or engineering judgment.
6. When projects abut, the Engineer(s) may omit the END ROAD WORK, TRAFFIC FINES DOUBLE, and other advance warning signs if the signing would be redundant and the work areas appear continuous to the motorists. If the adjacent project is completed first, the Contractor shall erect the necessary warning signs as shown on these sheets, the TCP sheets or as directed by the Engineer. The BEGIN ROAD WORK NEXT X MILES sign shall be revised to show appropriate work zone distance.
7. The Engineer may require duplicate warning signs on the median side of divided highways where median width will permit and traffic volumes justify the signing.
8. All signs shall be constructed in accordance with the details found in the "Standard Highway Sign Designs for Texas," latest edition. Sign details not shown in this manual shall be shown in the plans or the Engineer shall provide a detail to the Contractor before the sign is manufactured.
9. The temporary traffic control devices shown in the illustrations of the BC sheets are examples. As necessary, the Engineer will determine the most appropriate traffic control devices to be used.
10. As shown on BC(2), the OBEY WARNING SIGNS STATE LAW sign, STAY ALERT TALK OR TEXT LATER (see Sign Detail G20-10T) and the WORK ZONE TRAFFIC FINES DOUBLE sign with plaque shall be erected in advance of the CSJ limits. However, the TRAFFIC FINES DOUBLE sign will not be required on projects consisting solely of mobile operation work, such as striping or milling edgeline rumble strips. The BEGIN ROAD WORK NEXT X MILES, CONTRACTOR and END ROAD WORK signs shall be erected at or near the CSJ limits.
11. Except for devices required by Note 10, traffic control devices should be in place only while work is actually in progress or a definite need exists.
12. The Engineer has the final decision on the location of all traffic control devices.
13. Inactive equipment and work vehicles, including workers' private vehicles must be parked away from travel lanes. They should be as close to the right-of-way line as possible, or located behind a barrier or guardrail, or as approved by the Engineer.

WORKER SAFETY APPAREL NOTES:

1. Workers on foot who are exposed to traffic or to construction equipment within the right-of-way shall wear high-visibility safety apparel meeting the requirements of ISEA "American National Standard for High-Visibility Apparel," or equivalent revisions, and labeled as ANSI 107-2004 standard performance for Class 2 or 3 risk exposure. Class 3 garments should be considered for high traffic volume work areas or night time work.

SHEET 1 OF 29

Texas Department of Transportation — Traffic Operations Division Standard

BARRICADE AND CONSTRUCTION GENERAL NOTES AND REQUIREMENTS

BC(1)-14

FILE: bcsm-14.dgn | DN: TxDOT | CK: TxDOT | DW: TxDOT | CK: TxDOT
©TxDOT November 2002 | CONT | SECT | JOB | HIGHWAY
REVISIONS 4-03 5-10 8-14 9-07 7-13 | DIST | COUNTY | SHEET NO.

TYPICAL MINIMUM CLEARANCES FOR LONG TERM AND INTERMEDIATE TERM SIGNS

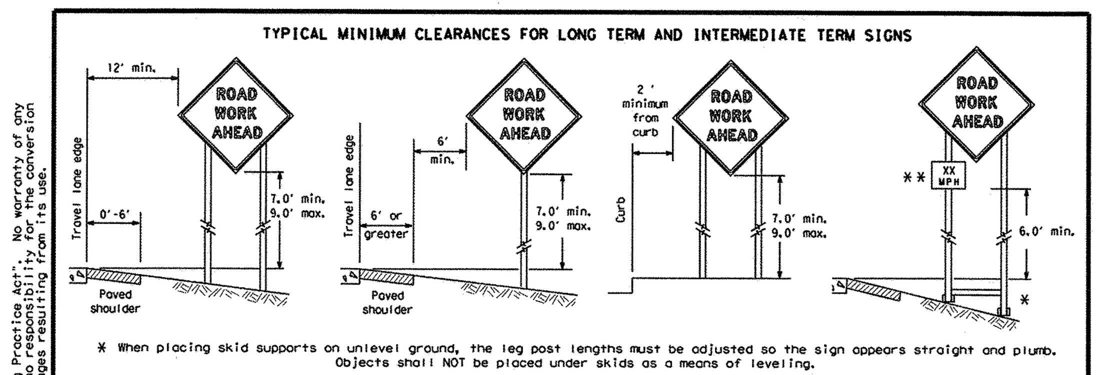

* When placing skid supports on unlevel ground, the leg post lengths must be adjusted so the sign appears straight and plumb. Objects shall NOT be placed under skids as a means of leveling.

** When plaques are placed on dual-leg supports, they should be attached to the upright nearest the travel lane. Supplemental plaques (advisory or distance) should not cover the surface of the parent sign.

ATTACHMENT FOR SIGN SUPPORTS

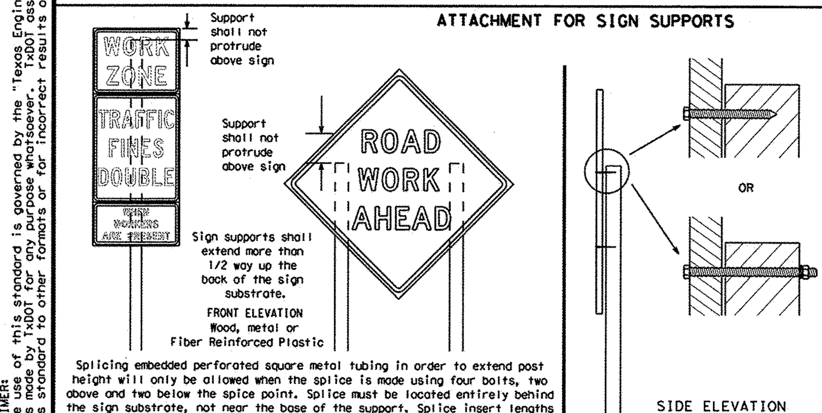

Splicing embedded perforated square metal tubing in order to extend post height will only be allowed when the splice is made using four bolts, two above and two below the spice point. Splice must be located entirely behind the sign substrate, not near the base of the support. Splice insert lengths should be at least 5 times nominal post size, centered on the splice and of at least the same gauge material.

Attachment to wooden supports will be by bolts and nuts or screws. Use TxDOT's or manufacturer's recommended procedures for attaching sign substrates to other types of sign supports

Nails shall NOT be allowed. Each sign shall be attached directly to the sign support. Multiple signs shall not be joined or spliced by any means. Wood supports shall not be extended or repaired by splicing or other means.

STOP/SLOW PADDLES

1. STOP/SLOW paddles are the primary method to control traffic by flaggers. The STOP/SLOW paddle size should be 24" x 24" as detailed below.
2. When used at night, the STOP/SLOW paddle shall be retroreflectorized.
3. STOP/SLOW paddles may be attached to a staff with a minimum length of 6' to the bottom of the sign.
4. Any lights incorporated into the STOP or SLOW paddle faces shall only be as specifically described in Section 6E.03 Hand Signaling Devices in the TMUTCD.

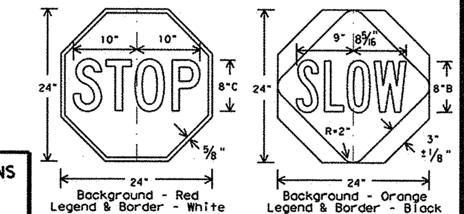

CONTRACTOR REQUIREMENTS FOR MAINTAINING PERMANENT SIGNS WITHIN THE PROJECT LIMITS

1. Permanent signs are used to give notice of traffic laws or regulations, call attention to conditions that are potentially hazardous to traffic operations, show route designations, destinations, directions, distances, services, points of interest, and other geographical, recreational, or cultural information. Drivers proceeding through a work zone need the same, if not better route guidance as normally installed on a roadway without construction.
2. When permanent regulatory or warning signs conflict with work zone conditions, remove or cover the permanent signs until the permanent sign message matches the roadway condition.
3. When existing permanent signs are moved and relocated due to construction purposes, they shall be visible to motorists at all times.
4. If existing signs are to be relocated on their original supports, they shall be installed on crashworthy bases as shown on the SMD Standard sheets. The signs shall meet the required mounting heights shown on the BC Sheets or the SMD Standards. This work should be paid for under the appropriate pay item for relocating existing signs.
5. If permanent signs are to be removed and relocated using temporary supports, the Contractor shall use crashworthy supports as shown on the BC sheets or the CWZTCD. The signs shall meet the required mounting heights shown on the BC Sheets or the SMD Standards during construction. This work should be paid for under the appropriate pay item for relocating existing signs.
6. Any sign or traffic control device that is struck or damaged by the Contractor or his/her construction equipment shall be replaced as soon as possible by the Contractor to ensure proper guidance for the motorists. This will be subsidiary to Item 502.

SHEET 7 OF 29

Texas Department of Transportation — Traffic Operations Division Standard

BARRICADE AND CONSTRUCTION TEMPORARY SIGN NOTES

BC(4)-14

FILE: bcsm-14.dgn | DN: TxDOT | CK: TxDOT | DW: TxDOT | CK: TxDOT
©TxDOT November 2002 | CONT | SECT | JOB | HIGHWAY
REVISIONS 9-07 8-14 7-13 | DIST | COUNTY | SHEET NO.

GENERAL NOTES FOR WORK ZONE SIGNS

1. Contractor shall install and maintain signs in a straight and plumb condition and/or as directed by the Engineer.
2. Wooden sign posts shall be painted white.
3. Barricades shall NOT be used as sign supports.
4. All signs shall be installed in accordance with the plans or as directed by the Engineer. Signs shall be used to regulate, warn, and guide the traveling public safely through the work zone.
5. The Contractor may furnish either the sign design shown in the plans or in the "Standard Highway Sign Designs for Texas" (SHSD). The Engineer/Inspector may require the Contractor to furnish other work zone signs that are shown in the TMUTCD but may have been omitted from the plans. Any variation in the plans shall be documented by written agreement between the Engineer and the Contractor's Responsible Person. All changes must be documented in writing before being implemented. This can include documenting the changes in the Inspector's TxDOT diary and having both the Inspector and Contractor initial and date the agreed upon changes.
6. The Contractor shall furnish sign supports listed in the "Compliant Work Zone Traffic Control Device List" (CWZTCD). The Contractor shall install the sign support in accordance with the manufacturer's recommendations. If there is a question regarding installation procedures, the Contractor shall furnish the Engineer a copy of the manufacturer's installation recommendations so the Engineer can verify the correct procedures are being followed.
7. The Contractor is responsible for installing signs on approved supports and replacing signs with damaged or cracked substrates and/or damaged or marred reflective sheeting as directed by the Engineer/Inspector.
8. Identification markings may be shown only on the back of the sign substrate. The maximum height of letters and/or company logos used for identification shall be 1 inch.
9. The Contractor shall replace damaged wood posts. New or damaged wood sign posts shall not be spliced.

DURATION OF WORK (as defined by the "Texas Manual on Uniform Traffic Control Devices" Part 6)

1. The types of sign supports, sign mounting height, the size of signs, and the type of sign substrates can vary based on the type of work being performed. The Engineer is responsible for selecting the appropriate size sign for the type of work being performed. The Contractor is responsible for ensuring the sign support, sign mounting height and substrate meets manufacturer's recommendations in regard to crashworthiness and duration of work requirements.
   a. Long-term stationary - work that occupies a location more than 3 days.
   b. Intermediate-term stationary - work that occupies a location more than one daylight period up to 3 days, or nighttime work lasting more than one hour.
   c. Short-term stationary - daytime work that occupies a location for more than 1 hour in a single daylight period.
   d. Short duration - work that occupies a location up to 1 hour.
   e. Mobile - work that moves continuously or intermittently (stopping for up to approximately 15 minutes.)

SIGN MOUNTING HEIGHT

1. The bottom of Long-term/Intermediate-term signs shall be at least 7 feet, but not more than 9 feet, above the paved surface, except as shown for supplemental plaques mounted below other signs.
2. The bottom of Short-term/Short Duration signs shall be a minimum of 1 foot above the pavement surface but no more than 2 feet above the ground.
3. Long-term/Intermediate-term Signs may be used in lieu of Short-term/Short Duration signing.
4. Short-term/Short Duration signs shall be used only during daylight and shall be removed at the end of the workday or raised to appropriate Long-term/Intermediate sign height.
5. Regulatory signs shall be mounted at least 7 feet, but not more than 9 feet, above the paved surface regardless of work duration.

SIZE OF SIGNS

1. The Contractor shall furnish the sign sizes shown on BC (2) unless otherwise shown in the plans or as directed by the Engineer.

SIGN SUBSTRATES

1. The Contractor shall ensure the sign substrate is installed in accordance with the manufacturer's recommendations for the type of sign support that is being used. The CWZTCD lists each substrate that can be used on the different types and models of sign supports.
2. "Mesh" type materials are NOT an approved sign substrate, regardless of the tightness of the weave.
3. All wooden individual sign panels fabricated from 2 or more pieces shall have one or more plywood cleat, 1/2" thick by 6" wide, fastened to the back of the sign and extending fully across the sign. The cleat shall be attached to the back of the sign using wood screws that do not penetrate the face of the sign panel. The screws shall be placed on both sides of the splice and spaced at 6" centers. The Engineer may approve other methods of splicing the sign face.

REFLECTIVE SHEETING

1. All signs shall be retroreflective and constructed of sheeting meeting the color and retro-reflectivity requirements of DMS-8300 for rigid signs or DMS-8310 for roll-up signs. The web address for DMS specifications is shown on BC(1).
2. White sheeting, meeting the requirements of DMS-8300 Type A, shall be used for signs with a white background.
3. Orange sheeting, meeting the requirements of DMS-8300 Type B_{FL} or Type C_{FL}, shall be used for rigid signs with orange backgrounds.

SIGN LETTERS

1. All sign letters and numbers shall be clear, and open rounded type uppercase alphabet letters as approved by the Federal Highway Administration (FHWA) and as published in the "Standard Highway Sign Design for Texas" manual. Signs, letters and numbers shall be of first class workmanship in accordance with Department Standards and Specifications.

REMOVING OR COVERING

1. When sign messages may be confusing or do not apply, the signs shall be removed or completely covered.
2. Long-term stationary or intermediate stationary signs installed on square metal tubing may be turned away from traffic 90 degrees when the sign message is not applicable. This technique may not be used for signs installed in the median of divided highways or near any intersections where the sign may be seen from approaching traffic.
3. Signs installed on wooden skids shall not be turned at 90 degree angles to the roadway. These signs should be removed or completely covered when not required.
4. When signs are covered, the material used shall be opaque, such as heavy mil black plastic, or other materials which will cover the entire sign face and maintain their opaque properties under automobile headlights at night, without damaging the sign sheeting.
5. Burlap shall NOT be used to cover signs.
6. Duct tape or other adhesive material shall NOT be affixed to a sign face.
7. Signs and anchor stubs shall be removed and holes backfilled upon completion of work.

SIGN SUPPORT WEIGHTS

1. Where sign supports require the use of weights to keep from turning over, the use of sandbags with dry, cohesionless sand should be used.
2. The sandbags will be tied shut to keep the sand from spilling and to maintain a constant weight.
3. Rock, concrete, iron, steel or other solid objects shall not be permitted for use as sign support weights.
4. Sandbags should weigh a minimum of 35 lbs and a maximum of 50 lbs.
5. Sandbags shall be made of a durable material that tears upon vehicular impact. Rubber (such as tire inner tubes) shall NOT be used.
6. Rubber ballasts designed for channelizing devices should not be used for ballast on portable sign supports. Sign supports designed and manufactured with rubber bases may be used when shown on the CWZTCD list.
7. Sandbags shall only be placed along or laid over the base supports of the traffic control device and shall not be suspended above ground level or hung with rope, wire, chains or other fasteners. Sandbags shall be placed along the length of the skids to weigh down the sign support.
8. Sandbags shall NOT be placed under the skid and shall not be used to level sign supports placed on slopes.

FLAGS ON SIGNS

1. Flags may be used to draw attention to warning signs. When used the flag shall be 16 inches square or larger and shall be orange or fluorescent red-orange in color. Flags shall not be allowed to cover any portion of the sign face.

SHEET 8 OF 29

Texas Department of Transportation — Traffic Operations Division Standard

BARRICADE AND CONSTRUCTION TEMPORARY SIGN NOTES

BC(4)-14

FILE: bcsm-14.dgn | DN: TxDOT | CK: TxDOT | DW: TxDOT | CK: TxDOT
©TxDOT November 2002 | CONT | SECT | JOB | HIGHWAY
REVISIONS 9-07 8-14 7-13 | DIST | COUNTY | SHEET NO.

102

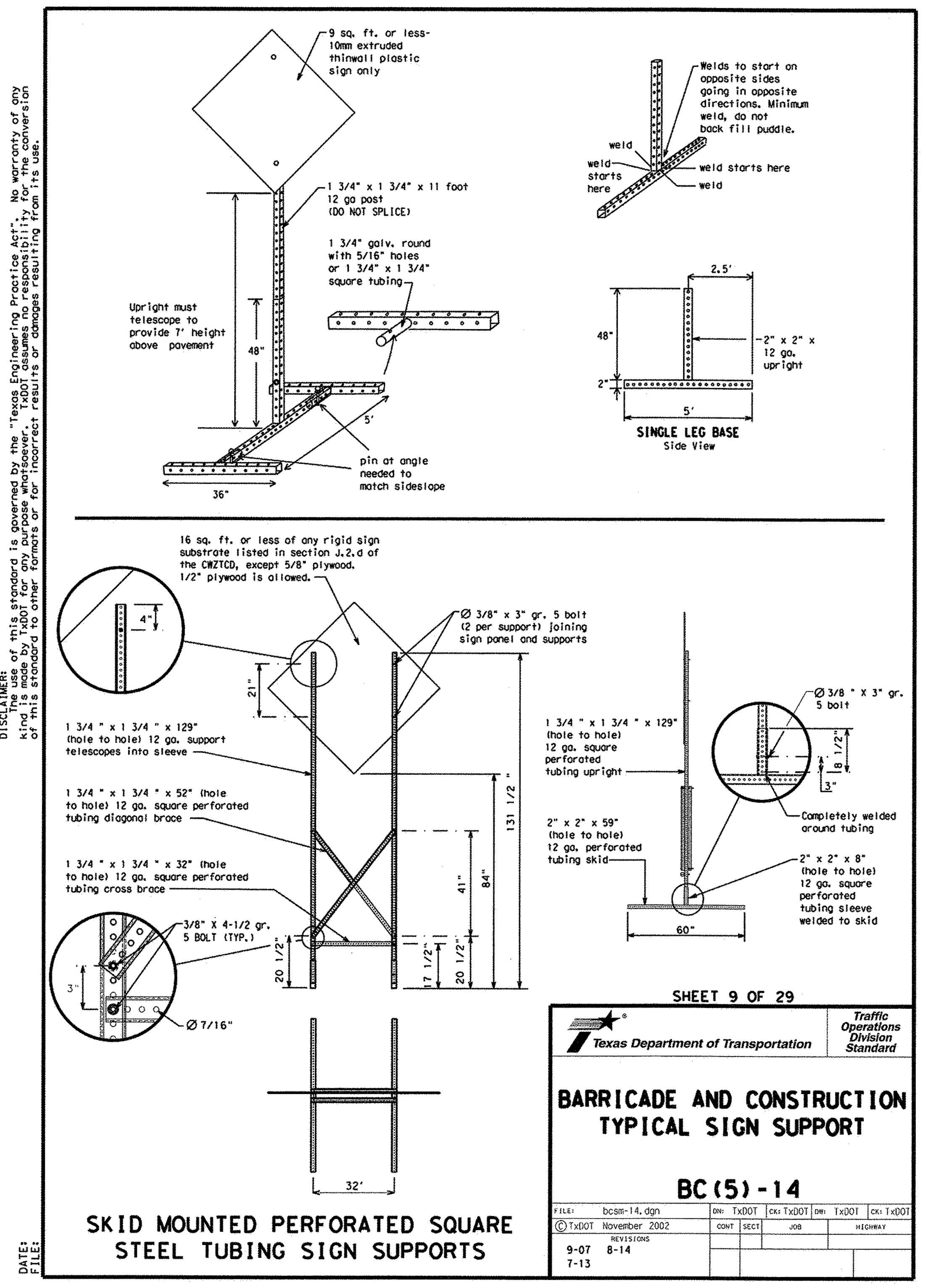

SKID MOUNTED PERFORATED SQUARE STEEL TUBING SIGN SUPPORTS

SHEET 9 OF 29

Texas Department of Transportation — Traffic Operations Division Standard

BARRICADE AND CONSTRUCTION TYPICAL SIGN SUPPORT

BC(5)-14

FILE: bcsm-14.dgn | DN: TxDOT | CK: TxDOT | DW: TxDOT | CK: TxDOT
©TxDOT November 2002 | CONT | SECT | JOB | HIGHWAY
REVISIONS 9-07 8-14 7-13 | DIST | COUNTY | SHEET NO.

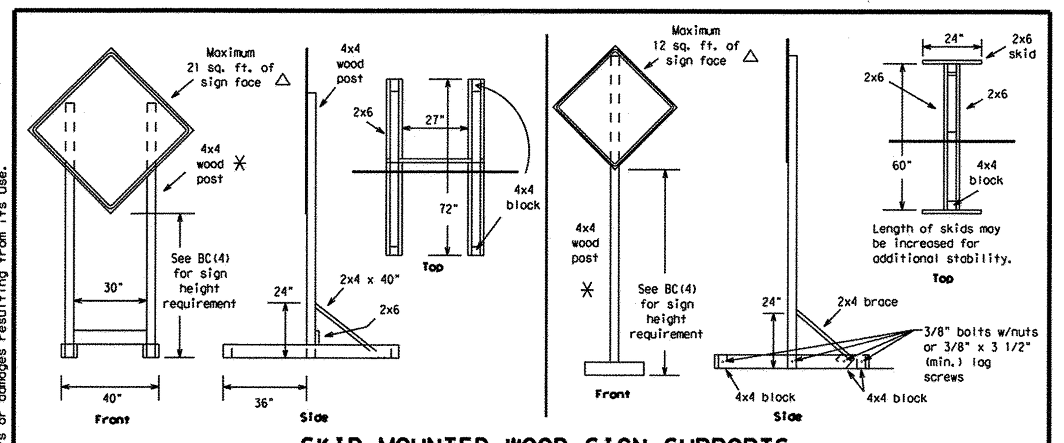

SKID MOUNTED WOOD SIGN SUPPORTS

LONG/INTERMEDIATE TERM STATIONARY - PORTABLE SKID MOUNTED SIGN SUPPORTS □

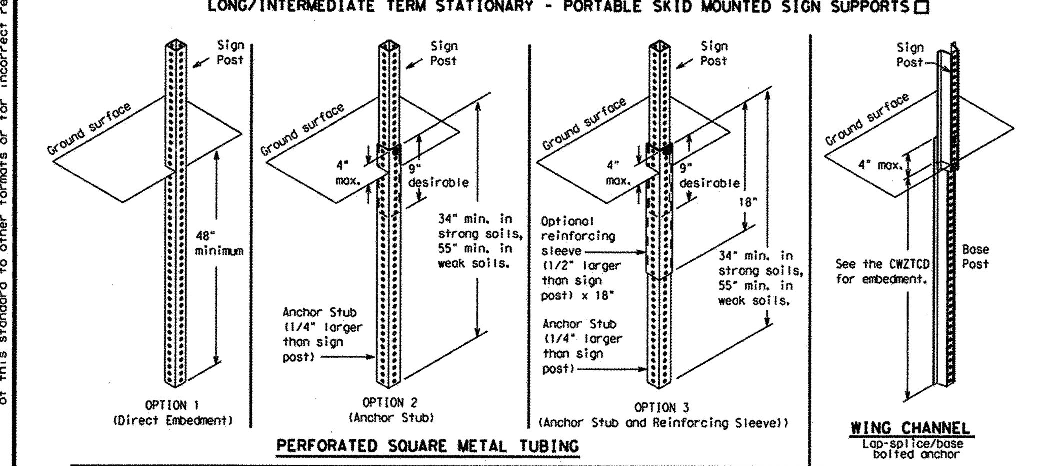

GROUND MOUNTED SIGN SUPPORTS

Refer to the CWZTCD and the manufacturer's installation procedure for each type sign support. The maximum sign square footage shall adhere to the manufacturer's recommendation. Two post installations can be used for larger signs.

Nominal Post Size	Number of Posts	Maximum Sq. feet of Sign Face	Minimum Soil Embedment	Drilled Hole(s) Required
4 x 4	1	12	36"	NO
4 x 4	2	21	36"	NO
4 x 6	1	21	36"	YES
4 x 6	2	36	36"	YES

WOOD POST SYSTEM FOR GROUND MOUNTED SIGN SUPPORTS

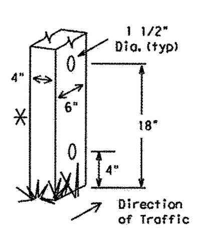

□ See BC(4) for definition of "Work Duration."

✳ Wood sign posts MUST be one piece. Splicing will NOT be allowed. Posts shall be painted white.

△ See the CWZTCD for the type of sign substrate that can be used for each approved sign support.

SHEET 10 OF 29

Texas Department of Transportation — Traffic Operations Division Standard

BARRICADE AND CONSTRUCTION TYPICAL SIGN SUPPORT

BC(5)-14

FILE: bcsm-14.dgn | DN: TxDOT | CK: TxDOT | DW: TxDOT | CK: TxDOT
©TxDOT November 2002 | CONT | SECT | JOB | HIGHWAY
REVISIONS 9-07 8-14 7-13 | DIST | COUNTY | SHEET NO.

WEDGE ANCHORS

Both steel and plastic Wedge Anchor Systems as shown on the SMD Standard Sheets may be used as temporary sign supports for signs up to 10 square feet of sign face. They may be set in concrete or in sturdy soils if approved by the Engineer. (See web address for "Traffic Engineering Standard Sheets" on BC(1)).

OTHER DESIGNS

MORE DETAILS OF APPROVED LONG/INTERMEDIATE AND SHORT TERM SUPPORTS CAN BE FOUND ON THE CWZTCD LIST. SEE BC(1) FOR WEBSITE LOCATION.

GENERAL NOTES

1. Nails may be used in the assembly of wooden sign supports, but 3/8" bolts with nuts or 3/8" x 3 1/2" lag screws must be used on every joint for final connection.
2. No more than 2 sign posts shall be placed within a 7 ft. circle, except for specific materials noted on the CWZTCD List.
3. When project is completed, all sign supports and foundations shall be removed from the project site. This will be considered subsidiary to Item 502.

SHEET 11 OF 29

Texas Department of Transportation — Traffic Operations Division Standard

BARRICADE AND CONSTRUCTION TYPICAL SIGN SUPPORT

BC(5)-14

FILE: bcsm-14.dgn | DN: TxDOT | CK: TxDOT | DW: TxDOT | CK: TxDOT
©TxDOT November 2002 | CONT | SECT | JOB | HIGHWAY
REVISIONS 9-07 8-14 7-13 | DIST | COUNTY | SHEET NO.

GENERAL NOTES

1. For long term stationary work zones on freeways, drums shall be used as the primary channelizing device.
2. For intermediate term stationary work zones on freeways, drums should be used as the primary channelizing device but may be replaced in tangent sections by vertical panels, or 42" two-piece cones. In tangent sections one-piece cones may be used with the approval of the Engineer but only if personnel are present on the project at all times to maintain the cones in proper position and location.
3. For short term stationary work zones on freeways, drums are the preferred channelizing device but may be replaced in tapers, transitions and tangent sections by vertical panels, two-piece cones or one-piece cones as approved by the Engineer.
4. Drums and all related items shall comply with the requirements of the current version of the "Texas Manual on Uniform Traffic Control Devices" (TMUTCD) and the "Compliant Work Zone Traffic Control Devices List" (CWZTCD).
5. Drums, bases, and related materials shall exhibit good workmanship and shall be free from objectionable marks or defects that would adversely affect their appearance or serviceability.
6. The Contractor shall have a maximum of 24 hours to replace any plastic drums identified for replacement by the Engineer/Inspector. The replacement device must be an approved device.

GENERAL DESIGN REQUIREMENTS

Pre-qualified plastic drums shall meet the following requirements:

1. Plastic drums shall be a two-piece design; the "body" of the drum shall be the top portion and the "base" shall be the bottom.
2. The body and base shall lock together in such a manner that the body separates from the base when impacted by a vehicle traveling at a speed of 20 MPH or greater but prevents accidental separation due to normal handling and/or air turbulence created by passing vehicles.
3. Plastic drums shall be constructed of lightweight flexible, and deformable materials. The Contractor shall NOT use metal drums or single piece plastic drums as channelization devices or sign supports.
4. Drums shall present a profile that is a minimum of 18 inches in width at the 36 inch height when viewed from any direction. The height of drum unit (body installed on base) shall be a minimum of 36 inches and a maximum of 42 inches.
5. The top of the drum shall have a built-in handle for easy pickup and shall be designed to drain water and not collect debris. The handle shall have a minimum of two widely spaced 9/16 inch diameter holes to allow attachment of a warning light, warning reflector unit or approved compliant sign.
6. The exterior of the drum body shall have a minimum of four alternating orange and white retroreflective circumferential stripes not less than 4 inches nor greater than 8 inches in width. Any non-reflectorized space between any two adjacent stripes shall not exceed 2 inches in width.
7. Bases shall have a maximum width of 36 inches, a maximum height of 4 inches, and a minimum of two footholds of sufficient size to allow base to be held down while separating the drum body from the base.
8. Plastic drums shall be constructed of ultra-violet stabilized, orange, high-density polyethylene (HDPE) or other approved material.
9. Drum body shall have a maximum unballasted weight of 11 lbs.
10. Drum and base shall be marked with manufacturer's name and model number.

RETROREFLECTIVE SHEETING

1. The stripes used on drums shall be constructed of sheeting meeting the color and retroreflectivity requirements of Departmental Materials Specification DMS-8300, "Sign Face Materials." Type A reflective sheeting shall be supplied unless otherwise specified in the plans.
2. The sheeting shall be suitable for use on and shall adhere to the drum surface such that, upon vehicular impact, the sheeting shall remain adhered in-place and exhibit no delaminating, cracking, or loss of retroreflectivity other than that loss due to abrasion of the sheeting surface.

BALLAST

1. Unballasted bases shall be large enough to hold up to 50 lbs. of sand. This base, when filled with the ballast material, should weigh between 35 lbs (minimum) and 50 lbs (maximum). The ballast may be sand in one to three sandbags separate from the base, sand in a sand-filled plastic base, or other ballasting devices as approved by the Engineer. Stacking of sandbags will be allowed, however height of sandbags above pavement surface may not exceed 12 inches.
2. Bases with built-in ballast shall weigh between 40 lbs. and 50 lbs. Built-in ballast can be constructed of an integral crumb rubber base or a solid rubber base.
3. Recycled truck tire sidewalls may be used for ballast on drums approved for this type of ballast on the CWZTCD list.
4. The ballast shall not be heavy objects, water, or any material that would become hazardous to motorists, pedestrians, or workers when the drum is struck by a vehicle.
5. When used in regions susceptible to freezing, drums shall have drainage holes in the bottoms so that water will not collect and freeze becoming a hazard when struck by a vehicle.
6. Ballast shall not be placed on top of drums.
7. Adhesives may be used to secure base of drums to pavement.

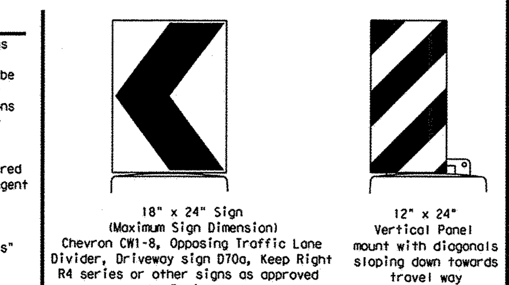

18" x 24" Sign (Maximum Sign Dimension) Chevron CW1-8, Opposing Traffic Lane Divider, Driveway sign D70a, Keep Right R4 series or other signs as approved by Engineer

12" x 24" Vertical Panel mount with diagonals sloping down towards travel way

Plywood, Aluminum or Metal sign substrates shall NOT be used on plastic drums

SIGNS, CHEVRONS, AND VERTICAL PANELS MOUNTED ON PLASTIC DRUMS

1. Signs used on plastic drums shall be manufactured using substrates listed on the CWZTCD.
2. Chevrons and other work zone signs with an orange background shall be manufactured with Type B_{FL} or Type C_{FL} Orange sheeting meeting the color and retroreflectivity requirements of DMS-8300, "Sign Face Material," unless otherwise specified in the plans.
3. Vertical Panels shall be manufactured with orange and white sheeting meeting the requirements of DMS-8300 Type A. Diagonal stripes on Vertical Panels shall slope down toward the intended traveled lane.
4. Other sign messages (text or symbolic) may be used as approved by the Engineer. Sign dimensions shall not exceed 18 inches in width or 24 inches in height, except for the R9 series signs discussed in note 8 below.
5. Signs shall be installed using a 1/2 inch bolt (nominal) and nut, two washers, and one locking washer for each connection.
6. Mounting bolts and nuts shall be fully engaged and adequately torqued. Bolts should not extend more than 1/2 inch beyond nuts.
7. Chevrons may be placed on drums on the outside of curves, on merging tapers or on shifting tapers. When used in these locations they may be placed on every drum or spaced not more than on every third drum. A minimum of three (3) should be used at each location called for in the plans.
8. R9-9, R9-10, R9-11 and R9-11a Sidewalk Closed signs which are 24 inches wide may be mounted on plastic drums, with approval of the Engineer.

SHEET 17 OF 29

Texas Department of Transportation — Traffic Operations Division Standard

BARRICADE AND CONSTRUCTION CHANNELIZING DEVICES

BC(8)-14

FILE: bcsm-14.dgn | DN: TxDOT | CK: TxDOT | DW: TxDOT | CK: TxDOT
©TxDOT November 2002 | CONT | SECT | JOB | HIGHWAY
REVISIONS 4-03 7-13 9-07 8-14 | DIST | COUNTY | SHEET NO.

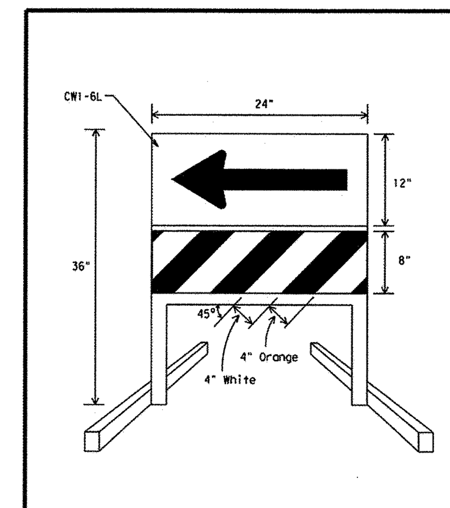

DIRECTION INDICATOR BARRICADE

1. The Direction Indicator Barricade may be used in tapers, transitions, and other areas where specific directional guidance to drivers is necessary.
2. If used, the Direction Indicator Barricade should be used in series to direct the driver through the transition and into the intended travel lane.
3. The Direction Indicator Barricade shall consist of One-Direction Large Arrow (CW1-6) sign in the size shown with a black arrow on a background of Type B_{FL} or Type C_{FL} Orange retroreflective sheeting above a rail with Type A retroreflective sheeting in alternating 4" white and orange stripes sloping downward at an angle of 45 degrees in the direction road users are to pass. Sheeting types shall be as per DMS 8300.
4. Double arrows on the Direction Indicator Barricade will not be allowed.
5. Approved manufacturers are shown on the CWZTCD List. Ballast shall be as approved by the manufacturers instructions.

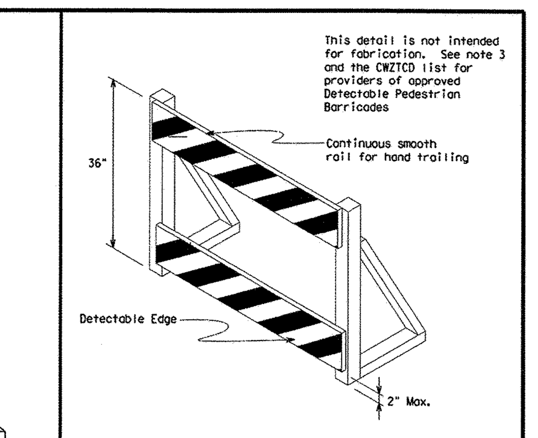

DETECTABLE PEDESTRIAN BARRICADES

1. When existing pedestrian facilities are disrupted, closed, or relocated in a TTC zone, the temporary facilities shall be detectable and include accessibility features consistent with the features present in the existing pedestrian facility.
2. Where pedestrians with visual disabilities normally use the closed sidewalk, a device that is detectable by a person with a visual disability traveling with the aid of a long cane shall be placed across the full width of the closed sidewalk.
3. Detectable pedestrian barricades similar to the one pictured above, longitudinal channelizing devices, some concrete barriers, and wood or chain link fencing with a continuous detectable edging can satisfactorily delineate a pedestrian path.
4. Tape, rope, or plastic chain strung between devices are not detectable, do not comply with the design standards in the "Americans with Disabilities Act Accessibility Guidelines for Buildings and Facilities (ADAAG)" and should not be used as a control for pedestrian movements.
5. Warning lights shall not be attached to detectable pedestrian barricades.
6. Detectable pedestrian barricades may use 8" nominal barricade rails as shown on BC(10) provided that the top rail provides a smooth continuous rail suitable for hand trailing with no splinters, burrs, or sharp edges.

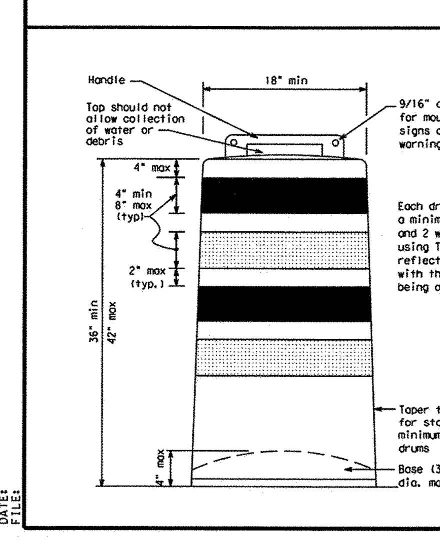

SHEET 18 OF 29

Texas Department of Transportation — Traffic Operations Division Standard

BARRICADE AND CONSTRUCTION CHANNELIZING DEVICES

BC(8)-14

FILE: bcsm-14.dgn | DN: | CK: | DW: | CK:
©TxDOT November 2002 | CONT | SECT | JOB | HIGHWAY
REVISIONS 4-03 7-13 9-07 8-14 | DIST | COUNTY | SHEET NO.

FOR CITY OF LEANDER USE

20-PICP-011

DESIGNED BY:	DRAFTED BY:
LAW	ZHL & CMC

REVISION	DATE
INITIAL SUBMITTAL	03.24.20
UPDATE #1 SUBMITTAL	05.18.20
UPDATE #2 SUBMITTAL	07.28.20

Carlson, Brigance & Doering, Inc.
Civil Engineering ◆ Surveying
FIRM ID #F3791
Main Office: 5501 West William Cannon Dr., Austin, Texas 78749
North Office: 12129 RR 620 N., Ste. 600, Austin, Texas 78750
Phone No. (512) 280-5160 Fax No. (512) 280-5165

SHEET NAME: TRAFFIC CONTROL PLAN & TXDOT DETAILS

JOB NAME: HOMESTEAD PHASE 3

PROJECT: STREET, DRAINAGE, WATER, AND WASTEWATER IMPROVEMENTS

8/10/2020

STATE OF TEXAS — LEE A. WHITED — 102471 — LICENSED PROFESSIONAL ENGINEER

CARLSON, BRIGANCE & DOERING, INC. ID# F3791

DATE: NOVEMBER 2019

JOB NUMBER: 5172

SHEET: 37 OF 61

SHEET NO.: 37

FILE PATH:J:\AC3D\5172\dwg\5172-TRAFFIC CONTROL.dwg - Aug 10, 2020 - 5:12pm

#	STREET NAME SIGN BLADES	
1	THISTLE HILL DRIVE	N. BAGDAD RD
2	LACKEY COVE	THISTLE HILL DRIVE

0 30 60 120
SCALE: 1" = 60'

LEGEND

- EXISTING STREET LIGHT
- STREET LIGHT
- SIGN
- STOP SIGN
- STOP BAR, 24"
- BARRICADE
- DASHED SIDEWALK = TO BE BUILT BY HOME BUILDER
- SOLID SIDEWALK = TO BE BUILT WITH THIS CONTRACT
- WATER MAIN
- FIRE HYDRANT
- GATE VALVE
- WASTEWATER MAIN
- WATER SERVICE
- WASTEWATER SERVICE
- STORM SEWER & INLET

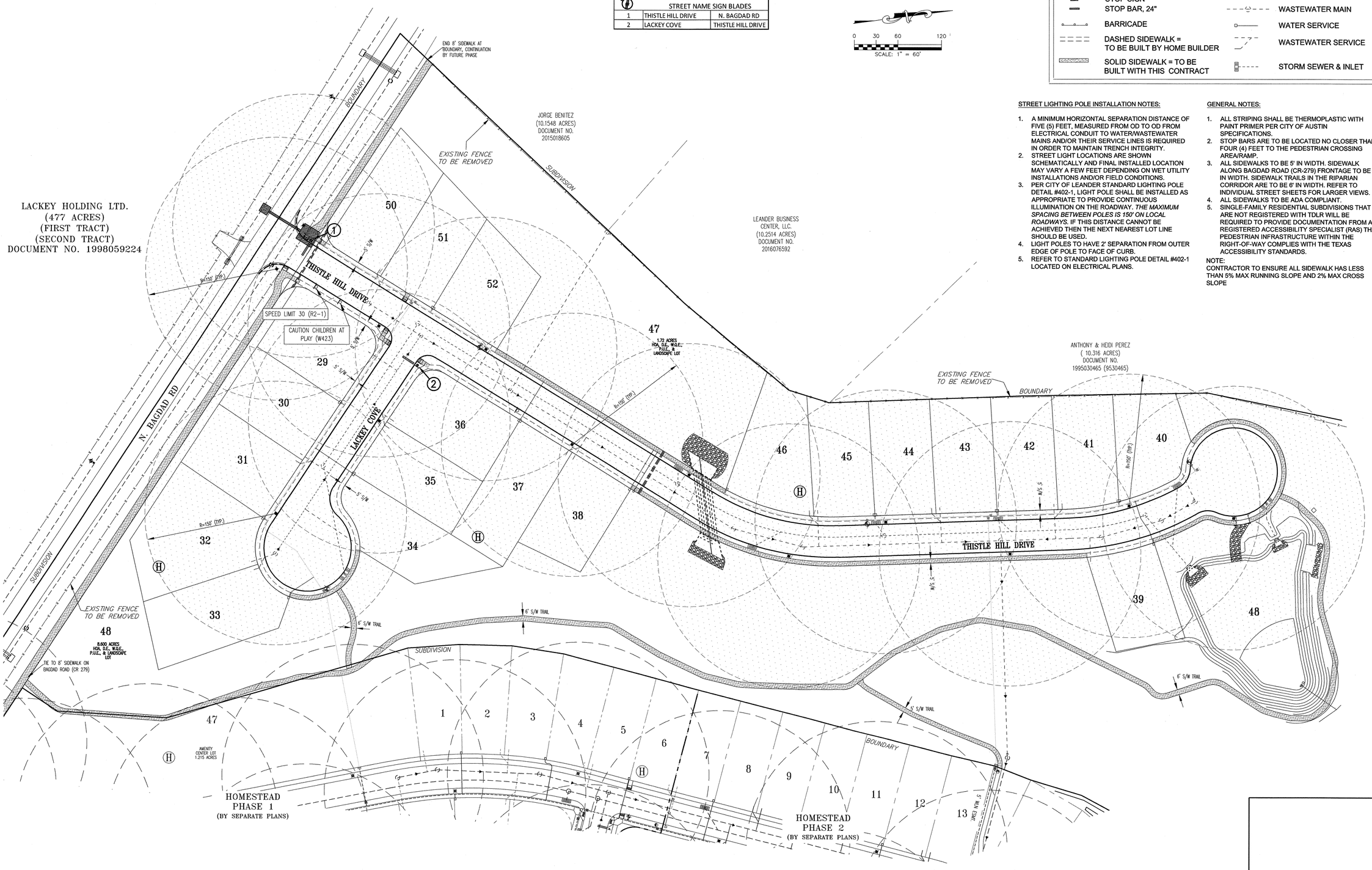

STREET LIGHTING POLE INSTALLATION NOTES:

1. A MINIMUM HORIZONTAL SEPARATION DISTANCE OF FIVE (5) FEET, MEASURED FROM OD TO OD FROM ELECTRICAL CONDUIT TO WATER/WASTEWATER MAINS AND/OR THEIR SERVICE LINES IS REQUIRED IN ORDER TO MAINTAIN TRENCH INTEGRITY.
2. STREET LIGHT LOCATIONS ARE SHOWN SCHEMATICALLY AND FINAL INSTALLED LOCATION MAY VARY A FEW FEET DEPENDING ON WET UTILITY INSTALLATIONS AND/OR FIELD CONDITIONS.
3. PER CITY OF LEANDER STANDARD LIGHTING POLE DETAIL #402-1, LIGHT POLE SHALL BE INSTALLED AS APPROPRIATE TO PROVIDE CONTINUOUS ILLUMINATION ON THE ROADWAY. *THE MAXIMUM SPACING BETWEEN POLES IS 150' ON LOCAL ROADWAYS.* IF THIS DISTANCE CANNOT BE ACHIEVED THEN THE NEXT NEAREST LOT LINE SHOULD BE USED.
4. LIGHT POLES TO HAVE 2' SEPARATION FROM OUTER EDGE OF POLE TO FACE OF CURB.
5. REFER TO STANDARD LIGHTING POLE DETAIL #402-1 LOCATED ON ELECTRICAL PLANS.

GENERAL NOTES:

1. ALL STRIPING SHALL BE THERMOPLASTIC WITH PAINT PRIMER PER CITY OF AUSTIN SPECIFICATIONS.
2. STOP BARS ARE TO BE LOCATED NO CLOSER THAN FOUR (4) FEET TO THE PEDESTRIAN CROSSING AREA/RAMP.
3. ALL SIDEWALKS TO BE 5' IN WIDTH. SIDEWALK ALONG BAGDAD ROAD (CR-279) FRONTAGE TO BE 8' IN WIDTH. SIDEWALK TRAILS IN THE RIPARIAN CORRIDOR ARE TO BE 6' IN WIDTH. REFER TO INDIVIDUAL STREET SHEETS FOR LARGER VIEWS.
4. ALL SIDEWALKS TO BE ADA COMPLIANT.
5. SINGLE-FAMILY RESIDENTIAL SUBDIVISIONS THAT ARE NOT REGISTERED WITH TDLR WILL BE REQUIRED TO PROVIDE DOCUMENTATION FROM A REGISTERED ACCESSIBILITY SPECIALIST (RAS) THAT PEDESTRIAN INFRASTRUCTURE WITHIN THE RIGHT-OF-WAY COMPLIES WITH THE TEXAS ACCESSIBILITY STANDARDS.

NOTE:
CONTRACTOR TO ENSURE ALL SIDEWALK HAS LESS THAN 5% MAX RUNNING SLOPE AND 2% MAX CROSS SLOPE

FOR CITY OF LEANDER USE

20-PICP-011

DESIGNED BY:	DRAFTED BY:
LAW	ZHL & CMC

REVISION	DATE
INITIAL SUBMITTAL	03.24.20
UPDATE #1 SUBMITTAL	05.18.20
UPDATE #2 SUBMITTAL	07.28.20

Carlson, Brigance & Doering, Inc.
Civil Engineering ◆ Surveying
FIRM ID #F3791
Main Office: 5501 West William Cannon Dr. Austin, Texas 78749
North Office: 12129 RR 620 N., Ste. 600 Austin, Texas 78750
Phone No. (512) 280-5160 Fax No. (512) 280-5165

SHEET NAME: LIGHTING STREET SIGNAGE STRIPING & SIDEWALK PLAN
JOB NAME: HOMESTEAD PHASE 3
PROJECT: STREET, DRAINAGE, WATER, AND WASTEWATER IMPROVEMENTS

8/10/2020
STATE OF TEXAS
LEE A. WHITED
102471
PROFESSIONAL ENGINEER
CARLSON, BRIGANCE & DOERING, INC.
ID# F3791

DATE	NOVEMBER 2019
JOB NUMBER	5172
SHEET	38 OF 61
SHEET NO.	38

FILE PATH:J:\ACSD\5172\dwg\5172-STREET LIGHT AND SIGNS.dwg - Aug 10, 2020 - 5:12pm

RESIDENTIAL LOCAL STREET SECTION WITH STANDARD UTILITY ASSIGNMENTS

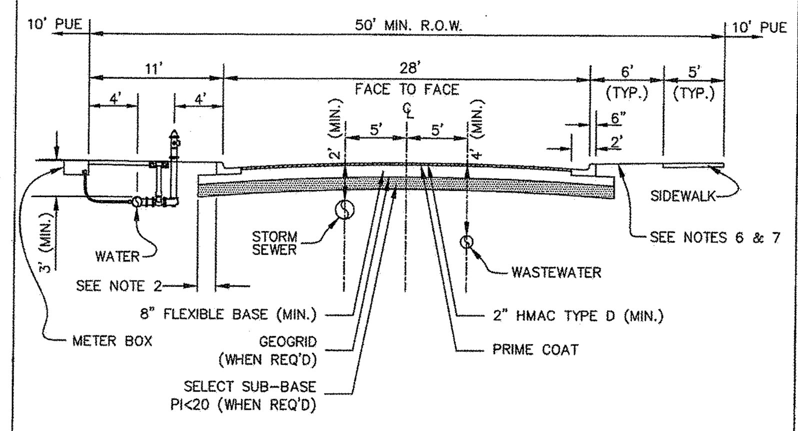

NOTES:

1. DIMENSIONS FOR ROW AND FOC–FOC ARE FOR RESIDENTIAL LOCAL STREETS ONLY. SEE TRANSPORTATION PLAN FOR ROADWAY AND RIGHT–OF–WAY WIDTHS FOR ALL OTHER ROADWAY CLASSIFICATIONS.
2. BASE COURSE TO EXTEND 1' (MINIMUM) PAST BACK OF CURB FOR SOILS WITH PI OF 20 OR LESS, 3' FOR ALL OTHER SOILS.
3. PAVEMENT STRUCTURAL SECTION SHALL, IN NO CASE, BE LESS THAN THE VALUES SHOWN ABOVE.
4. GEOTECHNICAL ENGINEER SHALL PROVIDE A PAVEMENT DESIGN TO DETERMINE THE NEED FOR ADDITIONAL ASPHALT THICKNESS, BASE THICKNESS, SUB–BASE AND GEOGRID BASED UPON ON–SITE SOIL CONDITIONS AND TRAFFIC PROJECTIONS.
5. SIDEWALK TO HAVE MAXIMUM 2% CROSS SLOPE.
6. SLOPE FROM BACK OF CURB TO RIGHT–OF–WAY SHALL BE 2% UNLESS OTHERWISE INDICATED ON THE GRADING PLAN.
7. STREET TREES, WHERE REQUIRED, SHALL BE PLACED BETWEEN SIDEWALK AND BACK OF CURB. SEE DETAIL 204–4.
8. METER BOXES AND SEWER SERVICE STUBS SHALL BE PLACED IN THE PUBLIC UTILITY EASEMENT ABUTTING THE SIDEWALK.

*THE ARCHITECT/ENGINEER ASSUMES RESPONSIBILITY FOR APPROPRIATE USE OF THIS STANDARD. DRAWING NOT TO SCALE.

STATE OF TEXAS — WAYNE S. WATTS — 86134 — LICENSED PROFESSIONAL ENGINEER — 12/21/17

City Of Leander, Texas
DETAIL #204-3
RESIDENTIAL LOCAL STREET SECTION WITH STANDARD UTILITY ASSIGNMENTS

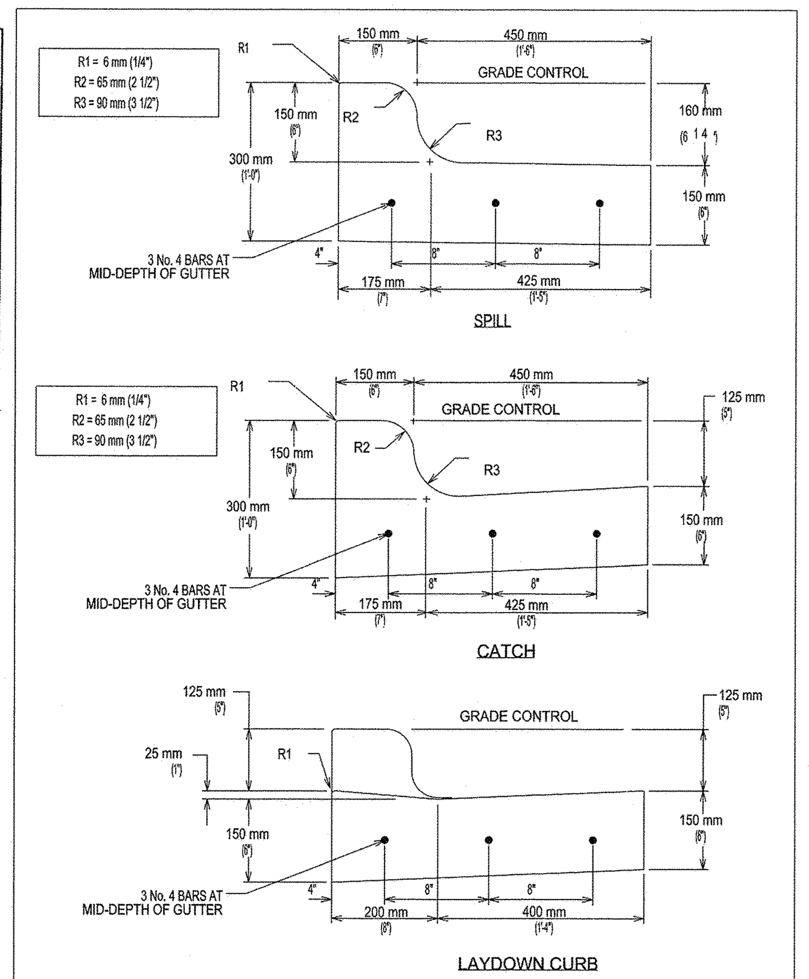

CITY OF AUSTIN DEPARTMENT OF PUBLIC WORKS	REINFORCED CURB AND GUTTER SECTION	
RECORD COPY SIGNED BY SAM ANGOORI 01/04/10 ADOPTED	THE ARCHITECT/ENGINEER ASSUMES RESPONSIBILITY FOR APPROPRIATE USE OF THIS STANDARD.	STANDARD NO. 430S-2

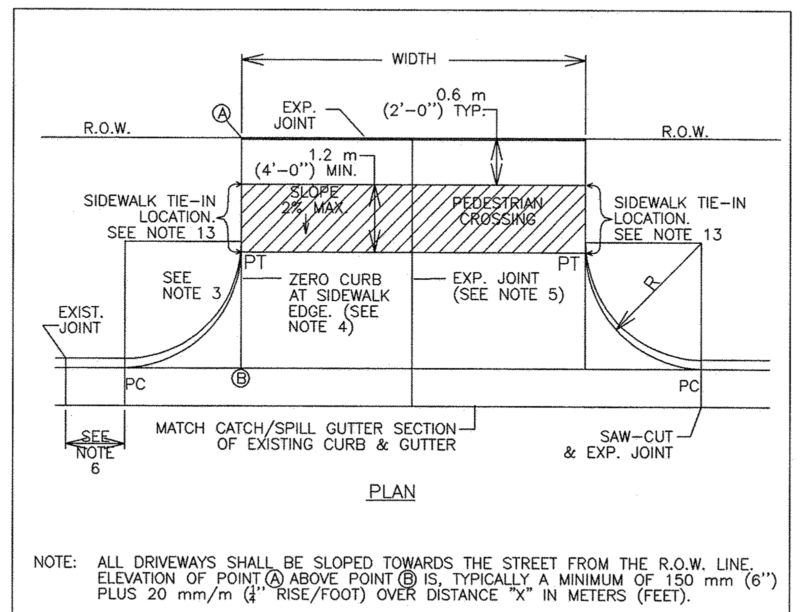

NOTE: ALL DRIVEWAYS SHALL BE SLOPED TOWARDS THE STREET FROM THE R.O.W. LINE. ELEVATION OF POINT Ⓐ ABOVE POINT Ⓑ IS, TYPICALLY A MINIMUM OF 150 mm (6") PLUS 20 mm/m (¼" RISE/FOOT) OVER DISTANCE "X" IN METERS (FEET).

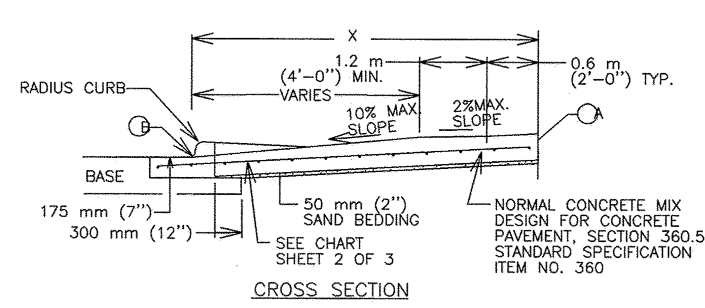

CITY OF AUSTIN DEPARTMENT OF PUBLIC WORKS	TYPE II DRIVEWAY	
RECORD COPY SIGNED BY CUONG TRAN 02/24/10 ADOPTED	THE ARCHITECT/ENGINEER ASSUMES RESPONSIBILITY FOR APPROPRIATE USE OF THIS STANDARD.	STANDARD NO. 433S–2 1 OF 2

USE	THICKNESS	REINFORCEMENT
DRIVEWAYS FOR PASSENGER VEHICLE PARKING LOTS	150 mm (6") MIN.	125 mm (5") MIN. CONCRETE WITH ONE LAYER OF13M (#4) BARS PLACED ON CHAIRS AT MIDDEPTH OF SLAB AT NO MORE THAN 450 mm (18") O.C. BOTH DIRECTIONS
ALL OTHERS	175 mm (7") MIN.	125 mm (5") MIN. CONCRETE WITH ONE LAYER OF13M (#4) BARS PLACED ON CHAIRS AT MIDDEPTH OF SLAB AT NO MORE THAN 450 mm (18") O.C. BOTH DIRECTIONS

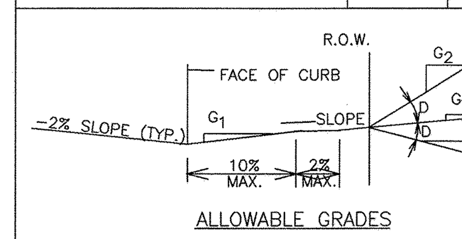

DRIVEWAY VOLUME (ADT)	D=GRADE CHANGE STD.	MAX
>1500	0%	3%
500–1500	3%	6%
< 500	6%	15%

NOTES:

1. ALL TYPE II DRIVEWAYS SHALL HAVE RADIUS ENDS.
2. DRIVEWAY WIDTHS AND RADII DIMENSIONS, ONE/TWO WAY TRAVEL REQUIREMENTS, AND GEOMETRIC LAY–OUT ARE HIGHLY VARIABLE, SUBJECT TO SITE SPECIFIC CONDITIONS AND REQUIREMENTS. SEE TRANSPORTATION CRITERIA MANUAL. SECTION 5 "DRIVEWAYS".
3. THE DRIVEWAY EDGE SHALL BE SMOOTHLY TRANSITIONED INTO THE SIDEWALK TIE–IN LOCATION BEGINNING AT THE RADIUS PC LINE.
4. "ZERO" CURB AT PT OR SIDEWALK EDGE, WHICHEVER IS ENCOUNTERED FIRST.
5. PLACE AN EXPANSION JOINT DOWN THE CENTER OF DRIVEWAY ALL DRIVEWAYS.
6. IF DIMENSION IS LESS THAN 1.5 METERS (5 FEET), REMOVE CURB AND GUTTER TO EXISTING JOINT AND POUR MONOLITHICALLY WITH DRIVEWAY.
7. IF THE BASE IS OVER–EXCAVATED WHERE THE CURB AND GUTTER WERE REMOVED, BACKFILL WITH CONCRETE MONOLITHICALLY WITH THE DRIVEWAY.
8. TYPE II DRIVEWAYS ARE TO BE LOCATED NO CLOSER TO THE CORNER OF INTERSECTING RIGHT OF WAY THAN 60% OF PARCEL FRONTAGE AT 30 METERS (100 FEET): WHICHEVER IS LESS.
9. DRIVEWAY SHALL NOT BE CONSTRUCTED WITHIN THE CURB RETURN OF A STREET INTERSECTION.
10. WHILE THE PROPERTY OWNER REMAINS RESPONSIBLE FOR GRADE BREAKS WITHIN PRIVATE PROPERTY, THE FIRE DEPARTMENT SHALL BE CONSULTED WHERE THE DRIVEWAY IS ESSENTIAL TO EMERGENCY VEHICLE ACCESS AND "G2 IS GREATER THAN 15%.
11. USE 12 MM (1/2") ASPHALT BOARD OR OTHER APPROVED MATERIAL FOR CURB AND GUTTER EXPANSION JOINTS. SIDEWALK, AT THE R.O.W. LINE AND AT MIDWIDTH, SEE NOTE 5.
12. SEE TRANSPORTATION CRITERIA MANUAL, SECTION 5 FOR OTHER DRIVEWAY REQUIREMENTS.
13. THE SIDEWALK, REGARDLESS OF ITS LOCATION WITH RESPECT TO THE CURB OR PROPERTY LINE, SHALL BE CONNECTED TO THE DRIVEWAY AT THESE LOCATIONS.
14. WATER METER BOXES AND WASTEWATER CLEAN OUTS ARE PROHIBITED FROM BEING LOCATED IN DRIVEWAY AREAS.

CITY OF AUSTIN DEPARTMENT OF PUBLIC WORKS	TYPE II DRIVEWAY	
RECORD COPY SIGNED BY CUONG TRAN 02/24/10 ADOPTED	THE ARCHITECT/ENGINEER ASSUMES RESPONSIBILITY FOR APPROPRIATE USE OF THIS STANDARD.	STANDARD NO. 433S–2 2 OF 2

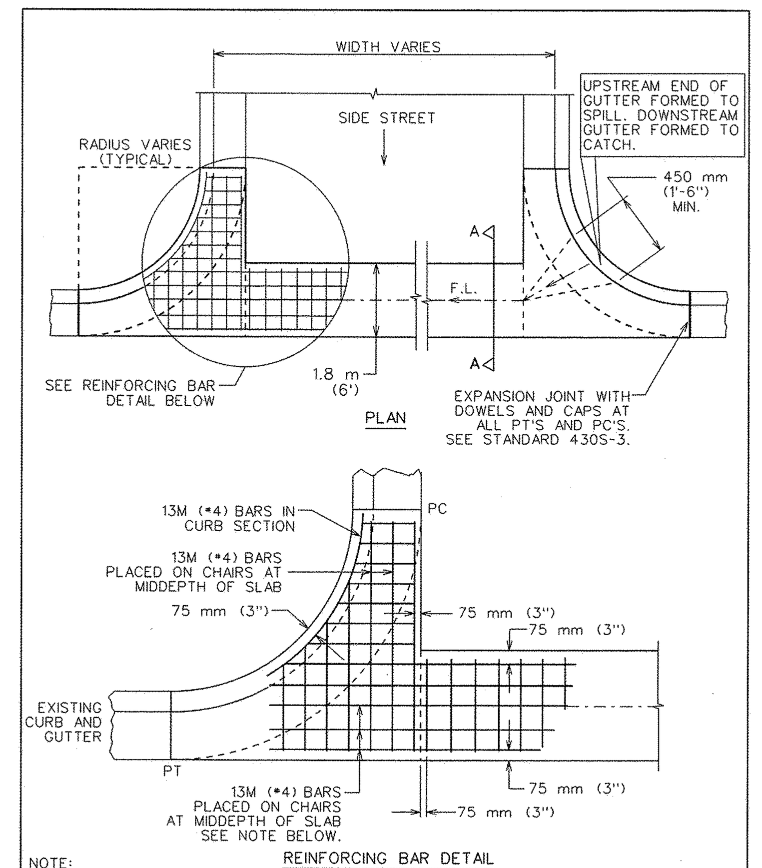

NOTE:
ALTERNATE 13M (*4) BARS PLACED ON CHAIRS AT MIDDEPTH OF SLAB TO BE CONTINUOUS ACROSS EXPANSION JOINT. BREAK BOND 150 mm (6") ON EACH SIDE OF EXPANSION JOINT.

CITY OF AUSTIN DEPARTMENT OF PUBLIC WORKS	CONCRETE VALLEY GUTTER	
RECORD COPY SIGNED BY BILL GARDNER 06/12/06 ADOPTED	THE ARCHITECT/ENGINEER ASSUMES RESPONSIBILITY FOR APPROPRIATE USE OF THIS STANDARD.	STANDARD NO. 436S-2 1 OF 2

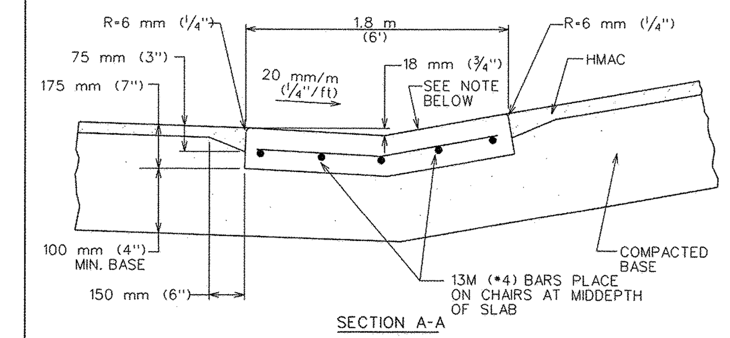

NOTE:
ADJUST SLOPE FROM 20 mm/m (¼"/ft) MINIMUM TO THE SLOPE OF THE SIDE STREET.

NOTES:

1. MATERIALS AND CONSTRUCTION METHODS SHALL CONFORM TO THE CITY OF AUSTIN STANDARD SPECIFICATIONS.
2. CONCRETE FOR THE VALLEY GUTTER SHALL BE CLASS A, ITEM 403S, "CONCRETE FOR STRUCTURES".
3. MONOLITHIC CURB AND GUTTER SHALL BE MEASURED BY PLAN QUANTITY PER SQUARE FEET AND PAID AS VALLEY GUTTER.
4. THE UPSTREAM CURB MID POINT MUST BE AT OR LOWER THAN THE BEGINNING P.C. AND 0.5% MINIMUM HIGHER THAN THE OPPOSING MID POINT.
5. ALLOWABLE CONSTRUCTION JOINT AT THE CENTER LINE WHEN TRAFFIC FLOW MUST BE MAINTAINED, CONSTRUCTED AS A CONTROL JOINT.

CITY OF AUSTIN DEPARTMENT OF PUBLIC WORKS	CONCRETE VALLEY GUTTER	
RECORD COPY SIGNED BY BILL GARDNER 06/12/06 ADOPTED	THE ARCHITECT/ENGINEER ASSUMES RESPONSIBILITY FOR APPROPRIATE USE OF THIS STANDARD.	STANDARD NO. 436S-2 2 OF 2

GENERAL NOTES:

1. THIS STANDARD IS APPLICABLE FOR RAMP CONSTRUCTION WITHIN RIGHT-OF-WAY OR EASEMENT ONLY.
2. THIS STANDARD REPRESENTS A TYPICAL CURB RAMP DESIGN FOR A NEWLY CONSTRUCTED INTERSECTION WITH A 6 m (20') RADIUS. LARGER RADII, STREET GRADES, LIMITED SIGHT DISTANCES, STREET CLASSIFICATION, SIGNALIZATION AND OTHER FACTORS MAY REQUIRE THE ENGINEER OR DESIGNATED REPRESENTATIVE TO MODIFY THIS STANDARD. SUFFICIENT RIGHT-OF-WAY SHALL BE DEDICATED SUCH THAT THE ENTIRE CURB RAMP, INCLUDING LANDING, AND THE INTER-CONNECTING SIDEWALK ARE CONTAINED WITHIN THE RIGHT-OF-WAY.
3. THE CURB, GUTTER AND RAMP SYSTEM SHALL BE CONFIGURED TO MAINTAIN ALL RUNOFF FROM A 25 YEAR FREQUENCY STORM WITHIN THE RIGHT-OF-WAY (DRAINAGE CRITERIA MANUAL SECTION 1.2.2.B). WHEN THERE IS AN ELEVATION DIFFERENCE BETWEEN THE BOTTOM OF RAMPS (IE. ELEVATION AT THE GUTTER) WITHIN A QUADRANT OF AN INTERSECTION, THE LOWER ELEVATION RAMP SHALL BE CONSTRUCTED WITH A POSITIVE RAMP SLOPE OF 1:12 IN ACCORDANCE WITH STANDARDS 432S-5, 432S-5A AND 432S-5B.
4. STANDARD ASSIGNMENT OF SIDEWALKS IS 600 mm (2') OFF PROPERTY LINE, EXCEPT AS INDICATED ON THE DRAWINGS.
5. ALTHOUGH CURB RAMPS MAY BE PLACED WITHIN THE RADIUS, PLACING THE RAMP OUTSIDE OF THE RADIUS WILL ALLOW FOR THE GREATEST DIFFERENCE IN ELEVATION BETWEEN THE RAMPS.
6. WINGS ARE REQUIRED ONLY IF PEDESTRIANS WOULD NORMALLY CROSS THE RAMP.
7. LANDINGS SHALL BE FLAT AND MATCH PT, PC OR TOP OF CURB ELEVATION.
8. CURB RAMPS WILL BE PERPENDICULAR TO ROADWAY CENTERLINES AND SHALL ALIGN WITH EACH OTHER.
9. GRADES ON SIDEWALKS LEADING TO OR FROM THE RAMPS SHALL FOLLOW CURB GRADES.
10. THE SLOPE OF THE SIDEWALK WHICH IS LOCATED WITHIN THE RADIUS AND CONNECTS TWO CURB RAMPS SHALL NOT EXCEED 1:20. THE DEVELOPER, AS PART OF THE CURB RAMP INSTALLATION, SHALL CONSTRUCT THIS CONNECTING SIDEWALK.
11. STRIPING AND SIGNAGE NOT REQUIRED IN ALL INSTANCES. STOP BARS, IF REQUIRED, SHALL BE LOCATED 1.2 m (4') FROM CROSSWALK.
12. IF A MEDIAN EXTENDS INTO THE CROSSWALK AREA, AN OPENING SHALL BE PROVIDED IN THE MEDIAN THE SAME WIDTH AS THE CURB RAMP.
13. CURB INLETS SHALL NOT BE LOCATED WITHIN 3.0 m (10') OF A CURB RAMP.
14. GUTTER SHALL PROVIDE SMOOTH TRANSITION TO RAMPS.

CITY OF AUSTIN DEPARTMENT OF PUBLIC WORKS	TYPE 1 CURB RAMPS - "T" INTERSECTION	
Bill Gardner 3/13/06 ADOPTED	THE ARCHITECT/ENGINEER ASSUMES RESPONSIBILITY FOR APPROPRIATE USE OF THIS STANDARD.	STANDARD NO. 432S-3A 2 OF 2

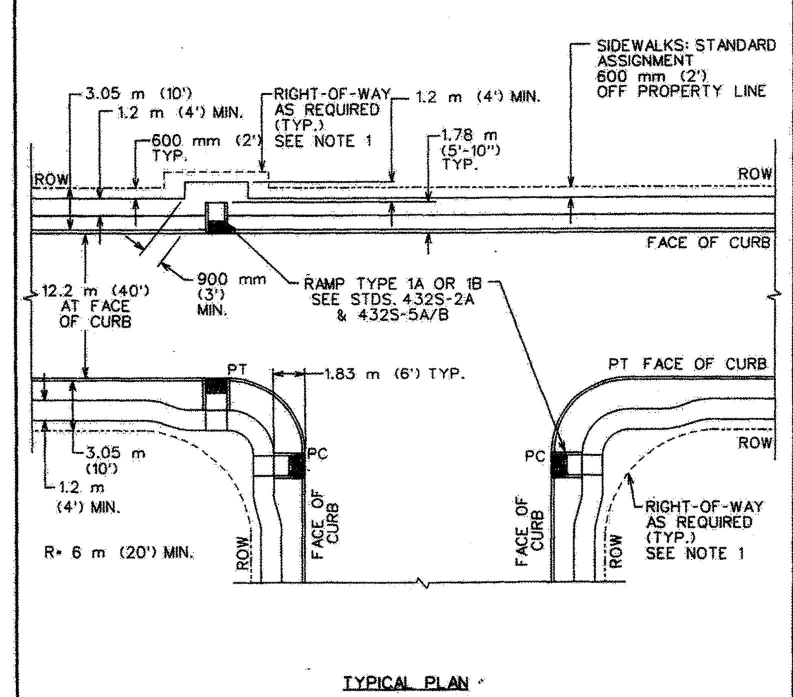

CITY OF AUSTIN DEPARTMENT OF PUBLIC WORKS	TYPE 1A/1B CURB RAMPS- "T" INTERSECTION	
Bill Gardner 3/13/06 ADOPTED	THE ARCHITECT/ENGINEER ASSUMES RESPONSIBILITY FOR APPROPRIATE USE OF THIS STANDARD.	STANDARD NO. 432S-3C 1 OF 2

GENERAL NOTES:

1. THIS STANDARD IS APPLICABLE FOR RAMP CONSTRUCTION WITHIN RIGHT-OF-WAY OR EASEMENT ONLY.
2. THIS STANDARD REPRESENTS A TYPICAL CURB RAMP DESIGN FOR A NEWLY CONSTRUCTED INTERSECTION WITH A 6 m (20') RADIUS. LARGER RADII, STREET GRADES, LIMITED SIGHT DISTANCES, STREET CLASSIFICATION, SIGNALIZATION AND OTHER FACTORS MAY REQUIRE THE ENGINEER OR DESIGNATED REPRESENTATIVE TO MODIFY THIS STANDARD. SUFFICIENT RIGHT-OF-WAY SHALL BE DEDICATED SUCH THAT THE ENTIRE CURB RAMP, INCLUDING LANDING, AND THE INTER-CONNECTING SIDEWALK ARE CONTAINED WITHIN THE RIGHT-OF-WAY.
3. THE CURB, GUTTER AND RAMP SYSTEM SHALL BE CONFIGURED TO MAINTAIN ALL RUNOFF FROM A 25 YEAR FREQUENCY STORM WITHIN THE RIGHT-OF-WAY (DRAINAGE CRITERIA MANUAL SECTION 1.2.2.B). WHEN THERE IS AN ELEVATION DIFFERENCE BETWEEN THE BOTTOM OF RAMPS (IE. ELEVATION AT THE GUTTER) WITHIN A QUADRANT OF AN INTERSECTION, THE LOWER ELEVATION RAMP SHALL BE CONSTRUCTED WITH A POSITIVE RAMP SLOPE OF 1:12 IN ACCORDANCE WITH STANDARDS 432S-5, 432S-5A AND 432S-5B.
3. STANDARD ASSIGNMENT OF SIDEWALKS IS 600 mm (2') OFF PROPERTY LINE, EXCEPT AS INDICATED ON THE DRAWINGS.
5. ALTHOUGH CURB RAMPS MAY BE PLACED WITHIN THE RADIUS, PLACING THE RAMP OUTSIDE OF THE RADIUS WILL ALLOW FOR THE GREATEST DIFFERENCE IN ELEVATION BETWEEN THE RAMPS.
6. WINGS ARE REQUIRED ONLY IF PEDESTRIANS WOULD NORMALLY CROSS THE RAMP.
7. LANDINGS SHALL BE FLAT AND MATCH PT, PC OR TOP OF CURB ELEVATION.
8. CURB RAMPS WILL BE PERPENDICULAR TO ROADWAY CENTERLINES AND SHALL ALIGN WITH EACH OTHER.
9. GRADES ON SIDEWALKS LEADING TO OR FROM THE RAMPS SHALL FOLLOW CURB GRADES.
10. THE SLOPE OF THE SIDEWALK WHICH IS LOCATED WITHIN THE RADIUS AND CONNECTS TWO CURB RAMPS SHALL NOT EXCEED 1:20. THE DEVELOPER, AS PART OF THE CURB RAMP INSTALLATION, SHALL CONSTRUCT THIS CONNECTING SIDEWALK.
11. STRIPING AND SIGNAGE NOT REQUIRED IN ALL INSTANCES. STOP BARS, IF REQUIRED, SHALL BE LOCATED 1.2 m (4') FROM CROSSWALK.
12. IF A MEDIAN EXTENDS INTO THE CROSSWALK AREA, AN OPENING SHALL BE PROVIDED IN THE MEDIAN THE SAME WIDTH AS THE CURB RAMP.
13. CURB INLETS SHALL NOT BE LOCATED WITHIN 3.0 m (10') OF A CURB RAMP.
14. GUTTER SHALL PROVIDE SMOOTH TRANSITION TO RAMPS.

CITY OF AUSTIN DEPARTMENT OF PUBLIC WORKS	TYPE 1A/1B CURB RAMPS- "T" INTERSECTION	
Bill Gardner 3/13/06 ADOPTED	THE ARCHITECT/ENGINEER ASSUMES RESPONSIBILITY FOR APPROPRIATE USE OF THIS STANDARD.	STANDARD NO. 432S-3C 2 OF 2

NOTES:

1. "ZERO" CURB AT PT OR SIDEWALK EDGE, WHICHEVER IS ENCOUNTERED FIRST. THE DRIVEWAY EDGE SHALL BE SMOOTHLY TRANSITIONED INTO THE SIDEWALK BEGINNING AT THE RADIUS PC LINE.
2. IF DIMENSION IS LESS THAN 1.5 METERS (5 FEET), REMOVE CURB AND GUTTER TO EXISTING JOINT AND POUR MONOLITHICALLY WITH THE DRIVEWAY.
3. IF THE BASE IS OVER EXCAVATED WHERE THE CURB AND GUTTER WAS REMOVED, BACKFILL WITH CONCRETE MONOLITHICALLY WITH THE DRIVEWAY.
4. ALL DRIVEWAYS MUST BE CONSTRUCTED WITHIN THE STREET FRONTAGE OF THE SUBJECT PROPERTY AS DETERMINED BY EXTENDING THE SIDE PROPERTY LINES TO THE CURB.
5. DRIVEWAYS SHALL NOT EXCEED 70% OF A LOTS' STREET FRONTAGE.
6. TYPE I DRIVEWAYS ARE TO BE LOCATED NO CLOSER TO THE CORNER OF INTERSECTING RIGHTS-OF-WAY THAN 60% OF PARCEL FRONTAGE OR 15 METERS (50 FEET); WHICHEVER IS LESS.
7. DRIVEWAYS SHALL NOT BE CONSTRUCTED WITHIN THE CURB RETURN OF A STREET INTERSECTION.
8. SINGLE FAMILY LOTS LIMITED TO ONE DRIVEWAY EXCEPT FOR APPROVED SEMICIRCULAR DRIVES.
9. WHEN TWO DRIVEWAYS ARE USED (0NE PER UNIT; TWO MAXIMUM) FOR DUPLEXES AND TOWN HOMES, SINGLE FAMILY STANDARDS SHALL APPLY.
10. WHILE THE PROPERTY OWNER REMAINS RESPONSIBLE FOR GRADE BREAKS WITHIN PRIVATE PROPERTY, THE FIRE DEPARTMENT SHOULD BE CONSULTED WHERE THE DRIVEWAY IS ESSENTIAL TO EMERGENCY VEHICLE ACCESS AND "G2" IS GREATER THAN 15%. "G1" PLUS "D" SHOULD NOT EXCEED 15%.
11. SEE TRANSPORTATION MANUAL SECTION 5 FOR OTHER DRIVEWAY REQUIREMENTS.
12. USE 12 mm (½") ASPHALT BOARD, OR OTHER APPROVED MATERIAL, FOR CURB AND GUTTER EXPANSION JOINTS.
13. THE SIDEWALK, REGARDLESS OF ITS LOCATION WITH RESPECT TO THE CURB OR PROPERTY LINE, SHALL BE CONNECTED TO THE DRIVEWAY AT THESE LOCATIONS.
14. PLACE AN EXPANSION JOINT DOWN THE CENTER OF ALL DRIVEWAYS.
15. WATER METER BOXES AND WASTEWATER CLEAN OUTS ARE PROHIBITED FROM BEING LOCATED IN DRIVEWAY AREAS.

CITY OF AUSTIN DEPARTMENT OF PUBLIC WORKS	TYPE I DRIVEWAY (1 & 2 FAMILY RESIDENTIAL USE ONLY)	
RECORD COPY SIGNED BY SAM ANGOORI 10/19/09 ADOPTED	THE ARCHITECT/ENGINEER ASSUMES RESPONSIBILITY FOR APPROPRIATE USE OF THIS STANDARD.	STANDARD NO. 433S-1 4 OF 4

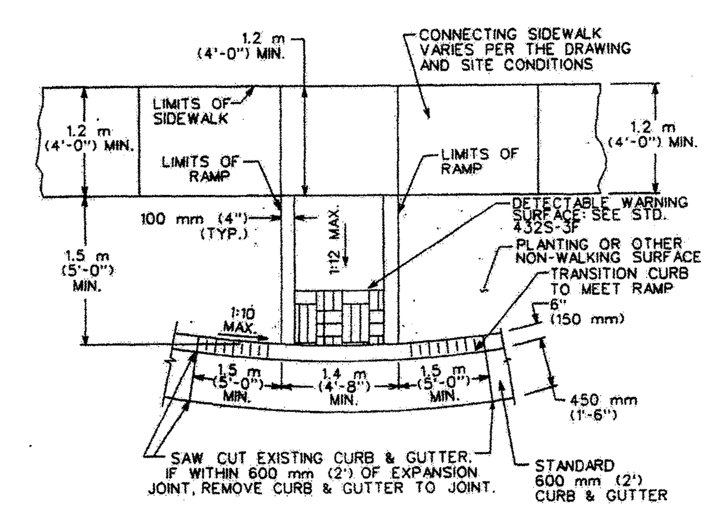

CITY. OF AUSTIN DEPARTMENT OF PUBLIC WORKS	TYPE 1B SIDEWALK CURB RAMP	
Bill Gardner 9/14/05 ADOPTED	THE ARCHITECT/ENGINEER ASSUMES RESPONSIBILITY FOR APPROPRIATE USE OF THIS STANDARD.	STANDARD NO. 432S-5B

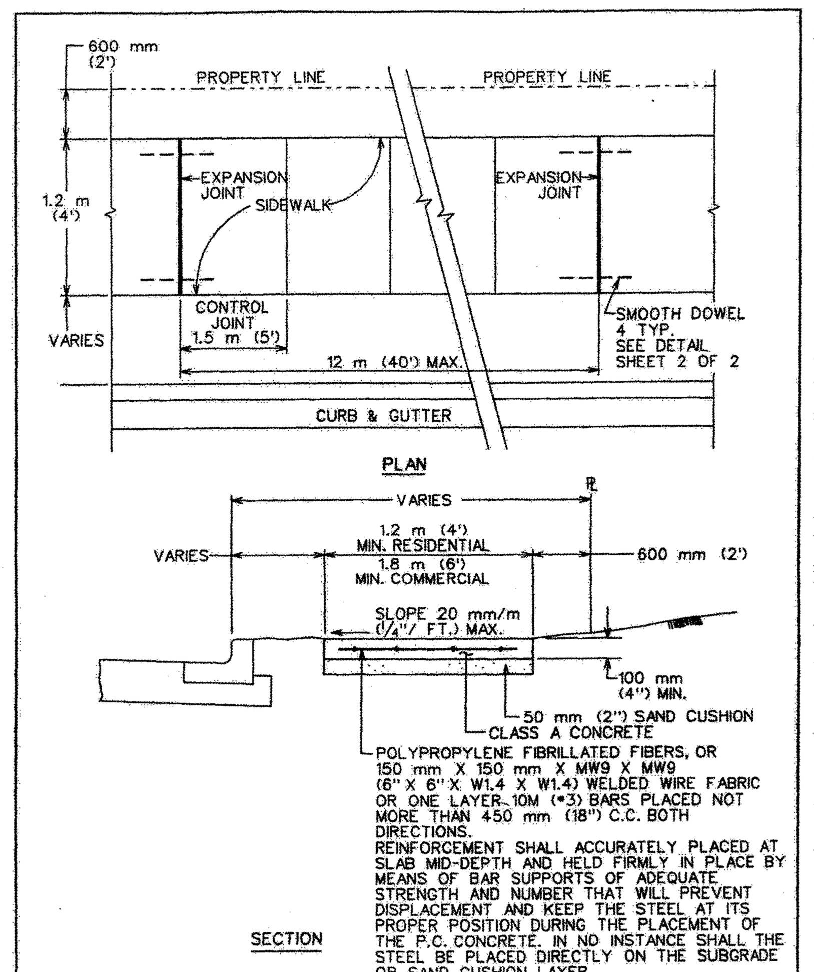

CITY OF AUSTIN DEPARTMENT OF PUBLIC WORKS	SIDEWALK	
Bill Gardner 3/26/08 ADOPTED	THE ARCHITECT/ENGINEER ASSUMES RESPONSIBILITY FOR APPROPRIATE USE OF THIS STANDARD.	STANDARD NO. 432S-1 1 OF 3

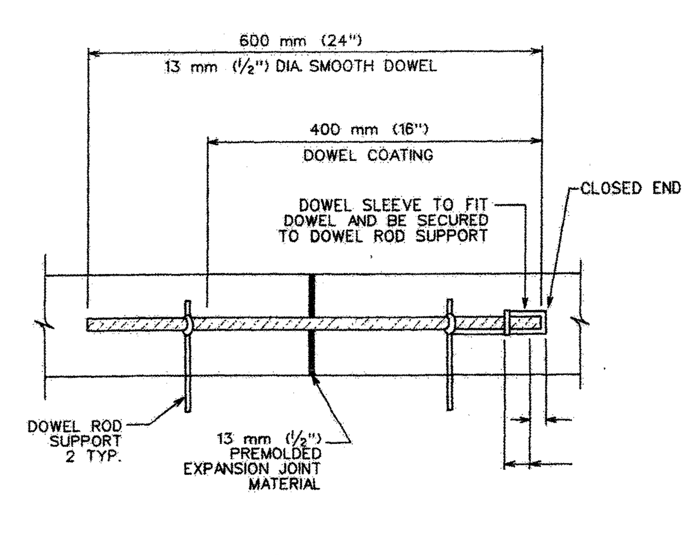

CITY OF AUSTIN DEPARTMENT OF PUBLIC WORKS	SIDEWALK	
Bill Gardner 3/26/08 ADOPTED	THE ARCHITECT/ENGINEER ASSUMES RESPONSIBILITY FOR APPROPRIATE USE OF THIS STANDARD.	STANDARD NO. 432S-1 2 OF 3

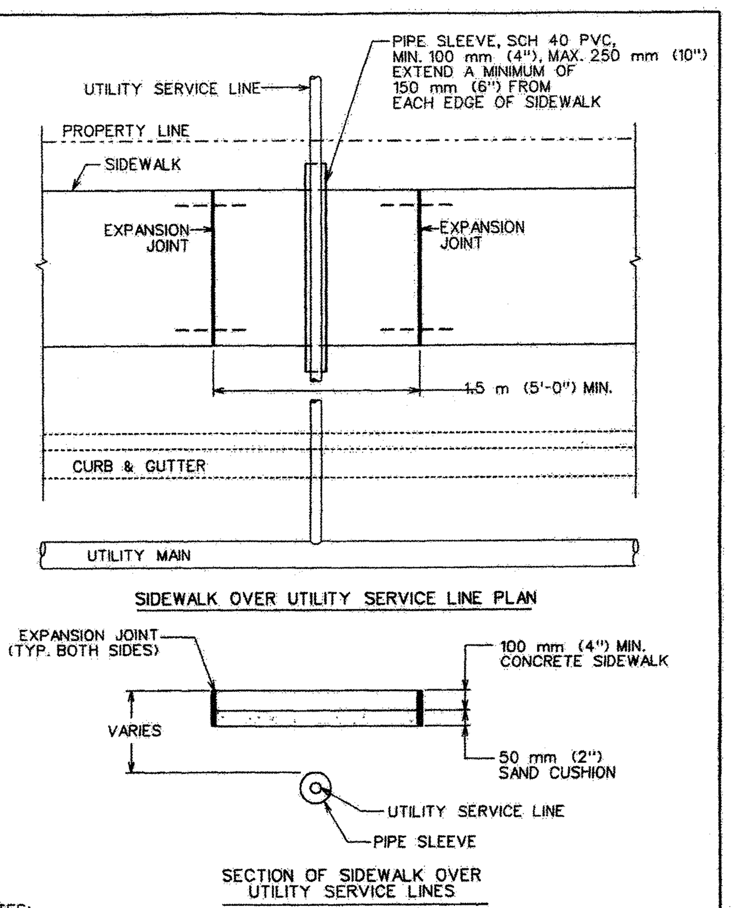

NOTES:
1. THIS STANDARD APPLIES TO THE INSTALLATION OF NEW UTILITIES OR UTILITIES BEING REPLACED BY A NEW LINE.
2. NO JOINTS IN UTILITY SERVICE PIPE TO BE LOCATED INSIDE PVC PIPE SLEEVE.

CITY OF AUSTIN DEPARTMENT OF PUBLIC WORKS	SIDEWALK	
Bill Gardner 3/26/08 ADOPTED	THE ARCHITECT/ENGINEER ASSUMES RESPONSIBILITY FOR APPROPRIATE USE OF THIS STANDARD.	STANDARD NO. 432S-1 3 OF 3

FOR CITY OF LEANDER USE

20–PICP–011

DESIGNED BY: LAW	DRAFTED BY: ZHL & CMC

REVISION	DATE
INITIAL SUBMITTAL	03.24.20
UPDATE #1 SUBMITTAL	05.18.20
UPDATE #2 SUBMITTAL	07.28.20

Carlson, Brigance & Doering, Inc.
Civil Engineering ❖ Surveying
FIRM ID #F3791
Main Office: 5501 West William Cannon Dr. Austin, Texas 78749
North Office: 12129 RR 620 N., Ste. 600 Austin, Texas 78750
Phone No. (512) 280-5160 Fax No. (512) 280-5165

SHEET NAME: STANDARD CONSTRUCTION DETAILS (1 OF 3)

JOB NAME: HOMESTEAD PHASE 3

PROJECT: STREET, DRAINAGE, WATER, AND WASTEWATER IMPROVEMENTS

8/10/2020
STATE OF TEXAS — LEE A. WHITED — 102471 — LICENSED PROFESSIONAL ENGINEER
CARLSON, BRIGANCE & DOERING, INC. ID# F3791

DATE: NOVEMBER 2019
JOB NUMBER: 5172
SHEET: 39 OF 61
SHEET NO.: 39

FILE PATH:J:\AC3D\5172\dwg\5172-STD DETAILS.dwg - Aug 10, 2020 - 5:12pm

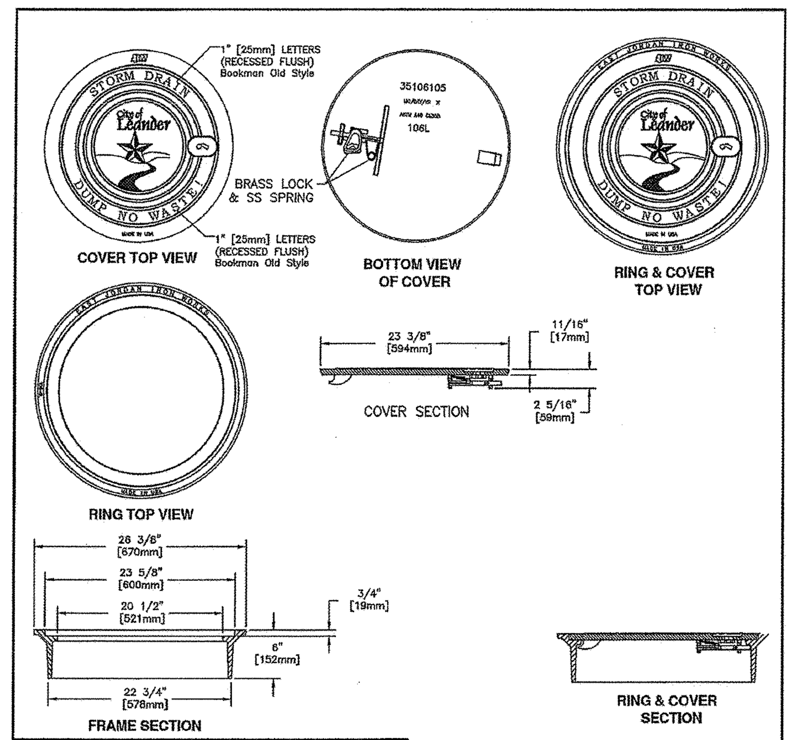

MANHOLE ASSEMBLY WITH LOCK	EST. WT. COVER: 86 LBS 39kg RING: 95 LBS 43kg TOTAL: 181 LBS 82kg
EAST JORDAN IRON WORKS PRODUCT NO. 35505205 OR APPROVED EQUAL	OPEN AREA N/A; MAT'L SPEC. COVER – GRAY IRON ASTM A48 CL35B FRAME – GRAY IRON ASTM A48 CL35B

LOAD RATING: NON-TRAFFIC

City Of Leander, Texas
DETAIL #107-2
STORM SEWER INLET COVER (LOCKING)
02/04/14

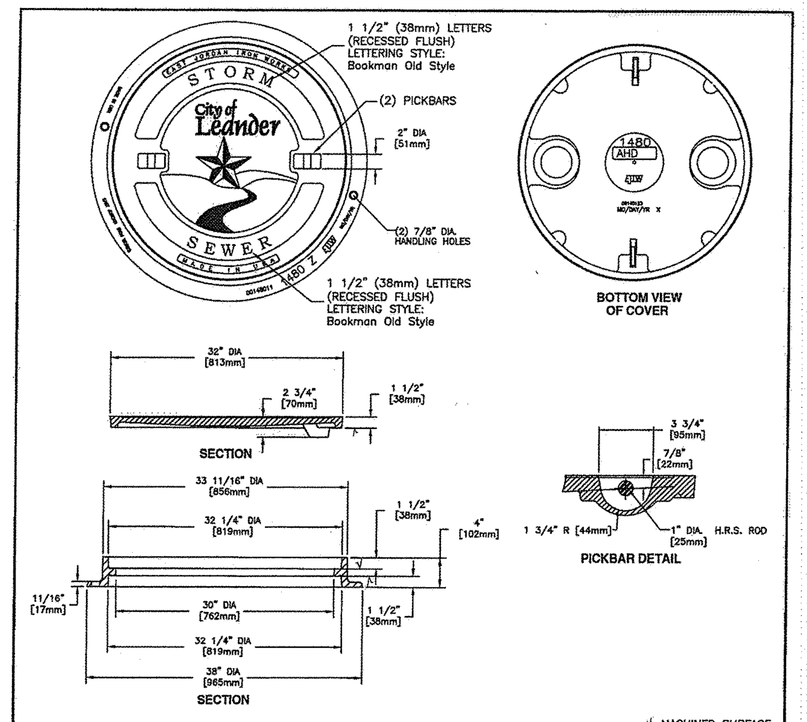

MANHOLE ASSEMBLY	EST. WT. COVER: 200 LBS 91kg FRAME: 155 LBS 70kg UNIT: 355 LBS 161kg
EAST JORDAN IRON WORKS PRODUCT NO. 00148105 OR NEENAH FOUNDRY DF-1274 LEANDER STORM	OPEN AREA N/A; MAT'L SPEC. COVER – GRAY IRON ASTM A48 CL35B FRAME – GRAY IRON ASTM A48 CL35B

LOAD RATING: HEAVY DUTY (H20)

City Of Leander, Texas
DETAIL #107-3
STORM SEWER MANHOLE COVER (HEAVY DUTY)
02/22/16

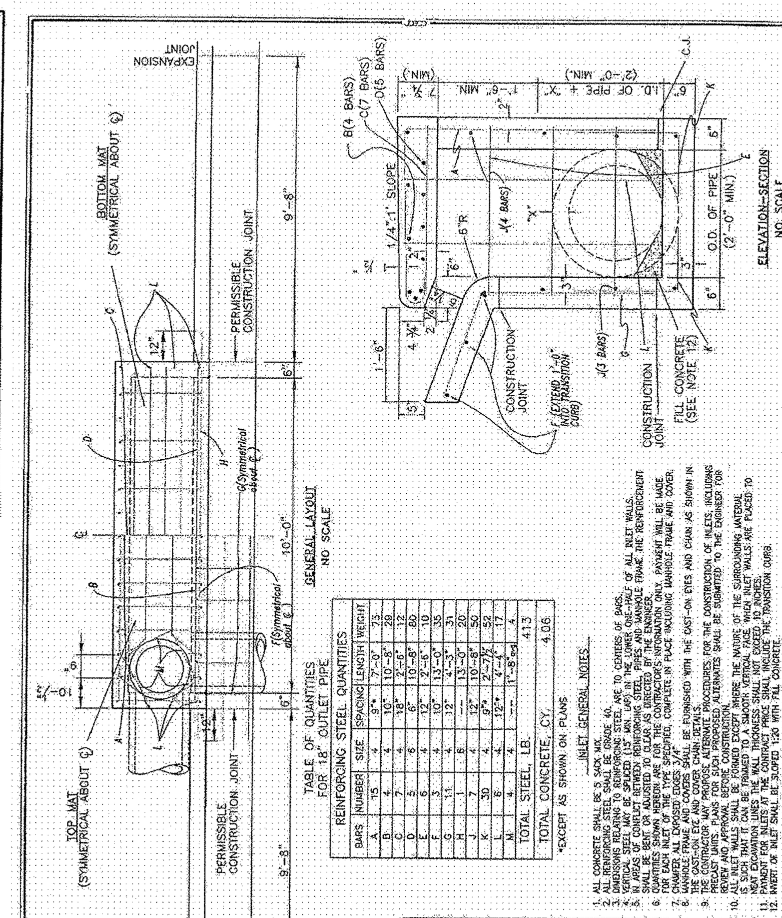

CITY OF LEANDER, TEXAS
Scale: NTS
Drawn by: RPW
STD. 10' CURB INLET DETAIL
Detail No. 201–2

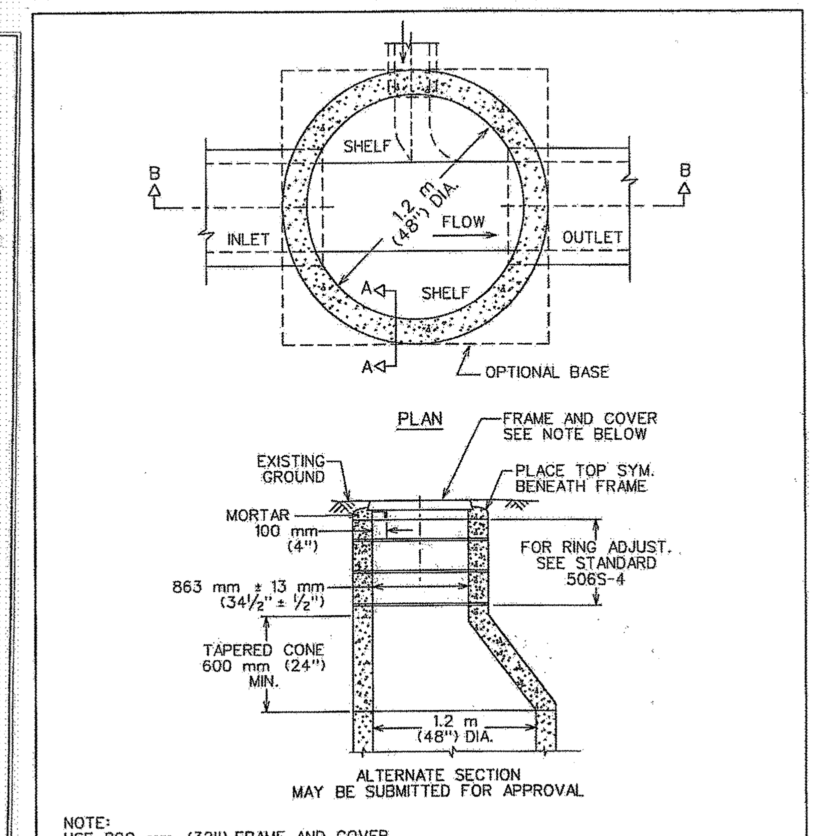

NOTE:
USE 800 mm (32") FRAME AND COVER.

MINIMUM MANHOLE DIA.	MINIMUM PIPE SIZE
1.2 m (4')	450 TO 600 mm (18 TO 24")
1.5 m (5')	750 mm TO 1.1 m (30 TO 42")
1.8 m (6')	1.2 TO 1.4 m (48 TO 54")
2.1 m (7')	1.5 TO 1.7 m (60 TO 66")

SIZE TO BE USED IS DEPENDENT ON DRAIN ANGLES.

CITY OF AUSTIN
DEPARTMENT OF WATERSHED PROTECTION AND DEVELOPMENT REVIEW
PRE-CAST CONCRETE STORM DRAIN MANHOLE
THE ARCHITECT/ENGINEER ASSUMES RESPONSIBILITY FOR APPROPRIATE USE OF THIS STANDARD.
ADOPTED
STANDARD NO. 506S-3
1 OF 2

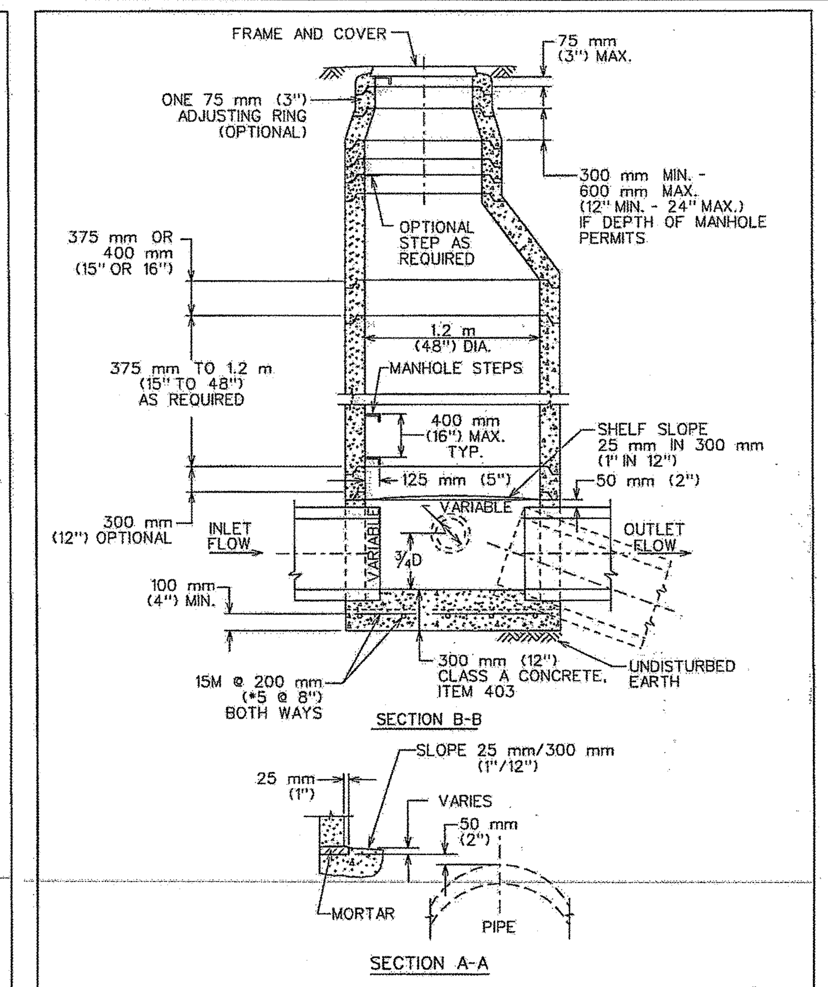

CITY OF AUSTIN
DEPARTMENT OF WATERSHED PROTECTION AND DEVELOPMENT REVIEW
PRE-CAST CONCRETE STORM DRAIN MANHOLE
THE ARCHITECT/ENGINEER ASSUMES RESPONSIBILITY FOR APPROPRIATE USE OF THIS STANDARD.
ADOPTED
STANDARD NO. 506S-3
2 OF 2

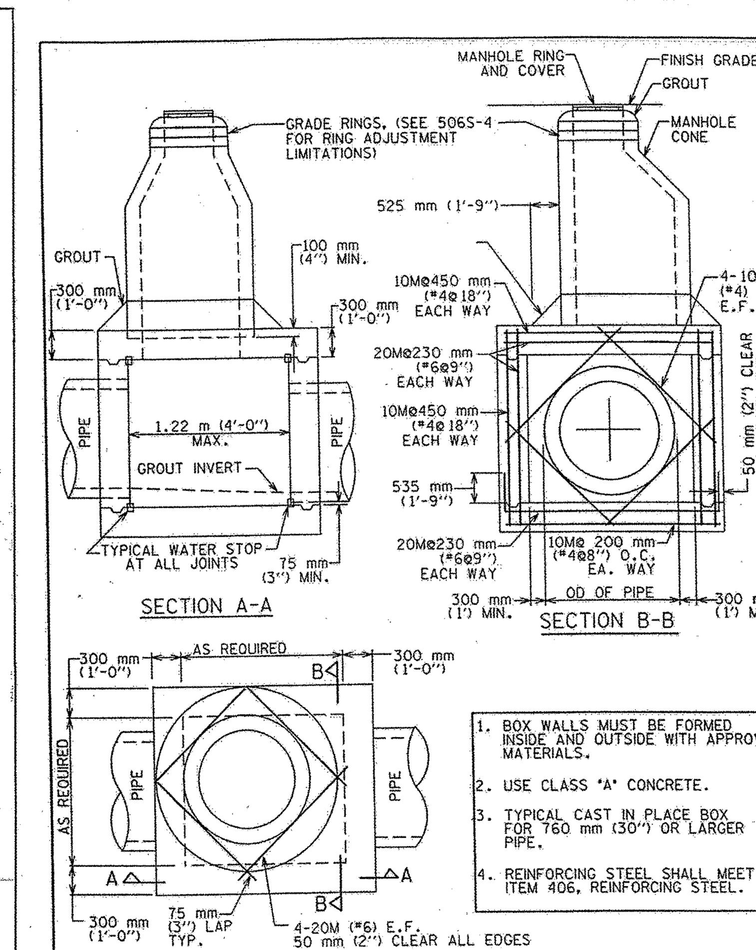

1. BOX WALLS MUST BE FORMED INSIDE AND OUTSIDE WITH APPROVED MATERIALS.
2. USE CLASS "A" CONCRETE.
3. TYPICAL CAST IN PLACE BOX FOR 760 mm (30") OR LARGER PIPE.
4. REINFORCING STEEL SHALL MEET ITEM 406, REINFORCING STEEL.

CITY OF AUSTIN
WATER AND WASTEWATER UTILITY
TYPICAL BOX MANHOLE 760 mm (30") & LARGER PIPE
2-17-00 ADOPTED
THE ARCHITECT/ENGINEER ASSUMES RESPONSIBILITY FOR APPROPRIATE USE OF THIS STANDARD.
STANDARD NO. 506S-5

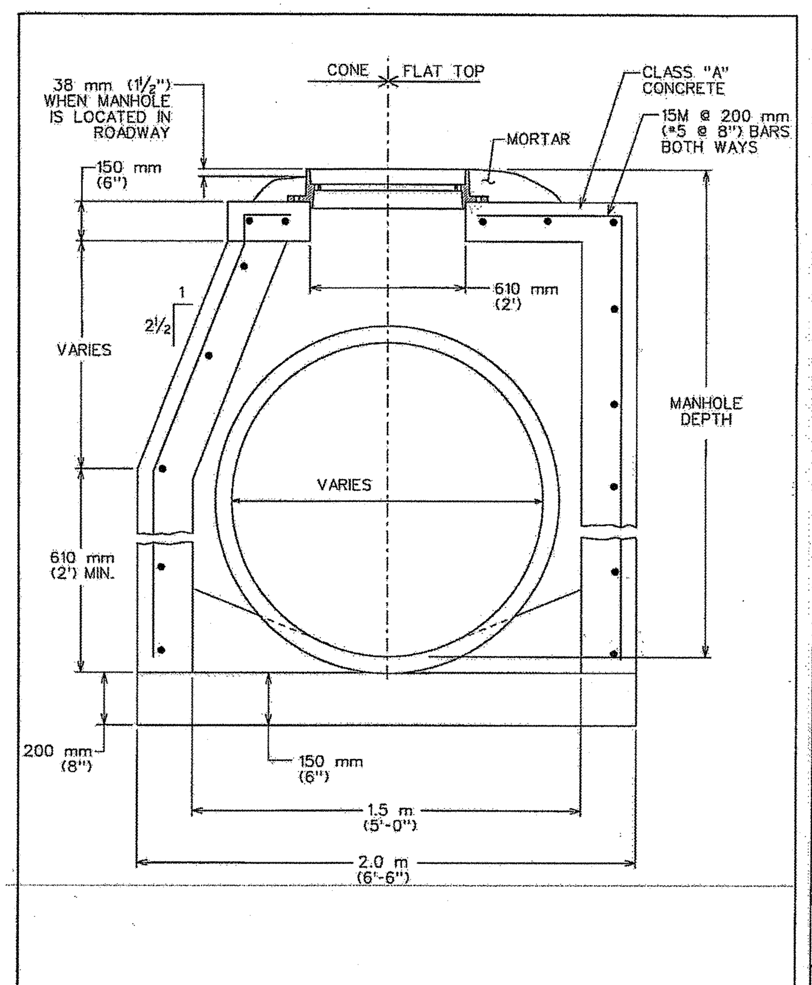

CITY OF AUSTIN
DEPARTMENT OF WATERSHED PROTECTION AND DEVELOPMENT REVIEW
STORM DRAIN MANHOLE DETAIL
THE ARCHITECT/ENGINEER ASSUMES RESPONSIBILITY FOR APPROPRIATE USE OF THIS STANDARD.
ADOPTED
STANDARD NO. 506S-11

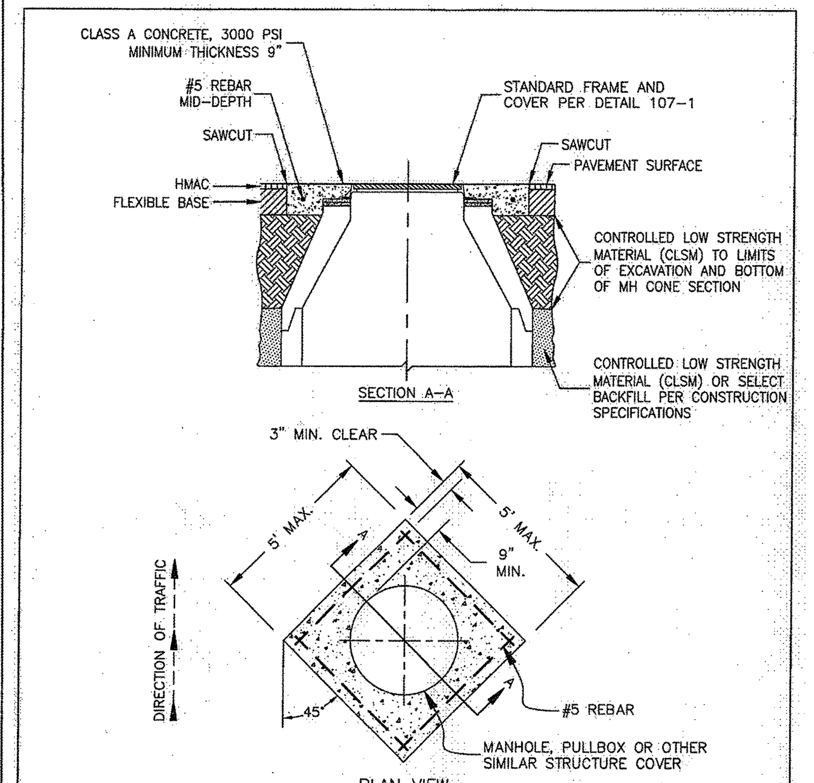

NOTES:
1. CONCRETE SHALL BE CLASS A, 3000 PSI MINIMUM AND SHALL BE REINFORCED WITH #5 BARS AS SHOWN. THE CONCRETE SHALL EXTEND TO SAW CUT PAVEMENT EDGE.
2. PLACEMENT OF CLSM SHALL BE BELOW FLEXIBLE BASE LAYER TO LIMITS OF EXCAVATION.
3. INSTALLATION OF HMAC OVER CONCRETE ADJUSTMENT SHALL NOT BE ALLOWED.
4. INSTALLATION OF CONCRETE CASTING ADJUSTMENT IS REQUIRED FOR ALL TYPES OF MANHOLES TO BE LOCATED IN THE ROADWAY.

City Of Leander, Texas
DETAIL #107-4
MANHOLE CASTING ADJUSTMENT
02/22/17

RESIDENTIAL LOCAL STREET SECTION WITH STANDARD UTILITY ASSIGNMENTS

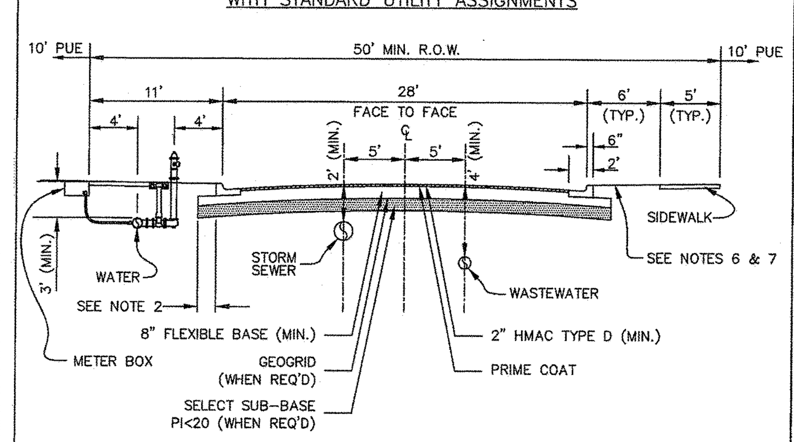

NOTES:
1. DIMENSIONS FOR ROW AND FOC–FOC ARE FOR RESIDENTIAL LOCAL STREETS ONLY. SEE TRANSPORTATION PLAN FOR ROADWAY AND RIGHT–OF–WAY WIDTHS FOR ALL OTHER ROADWAY CLASSIFICATIONS.
2. BASE COURSE TO EXTEND 1' (MINIMUM) PAST BACK OF CURB FOR SOILS WITH PI OF 20 OR LESS, 3' FOR ALL OTHER SOILS.
3. PAVEMENT STRUCTURAL SECTION SHALL, IN NO CASE, BE LESS THAN THE VALUES SHOWN ABOVE.
4. GEOTECHNICAL ENGINEER SHALL PROVIDE A PAVEMENT DESIGN TO DETERMINE THE NEED FOR ADDITIONAL ASPHALT THICKNESS, BASE THICKNESS, SUB–BASE AND GEOGRID BASED UPON ON–SITE SOIL CONDITIONS AND TRAFFIC PROJECTIONS.
5. SIDEWALK TO HAVE MAXIMUM 2% CROSS SLOPE.
6. SLOPE FROM BACK OF CURB TO RIGHT–OF–WAY SHALL BE 2% UNLESS OTHERWISE INDICATED ON THE GRADING PLAN.
7. STREET TREES, WHERE REQUIRED, SHALL BE PLACED BETWEEN SIDEWALK AND BACK OF CURB. SEE DETAIL 204–4.
8. METER BOXES AND SEWER SERVICE STUBS SHALL BE PLACED IN THE PUBLIC UTILITY EASEMENT ABUTTING THE SIDEWALK.

*THE ARCHITECT/ENGINEER ASSUMES RESPONSIBILITY FOR APPROPRIATE USE OF THIS STANDARD. DRAWING NOT TO SCALE.

City Of Leander, Texas
DETAIL #204-3
RESIDENTIAL LOCAL STREET SECTION WITH STANDARD UTILITY ASSIGNMENTS
12/21/17

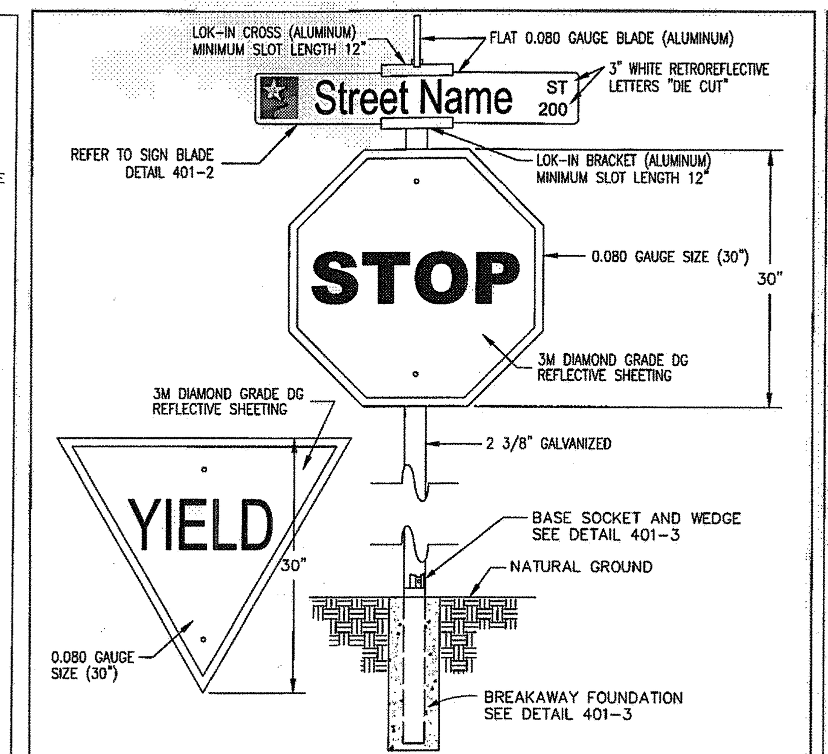

NOTES:
1. 7–FOOT MIN. HEIGHT FROM GROUND TO BOTTOM OF SIGN.
2. ALL SIGNS TO BE IN CONFORMANCE WITH THE CURRENT EDITION OF THE TEXAS MANUAL OF UNIFORM TRAFFIC CONTROL DEVICES (TMUTCD).
3. ALL SIGNAGE SHEETINGS SHALL BE 3M DIAMOND GRADE DG REFLECTIVE SHEETING.

The Architect/Engineer assumes responsibility for appropriate use of this standard.

City Of Leander, Texas
DETAIL #401-1
STREET SIGNS
11/20/15

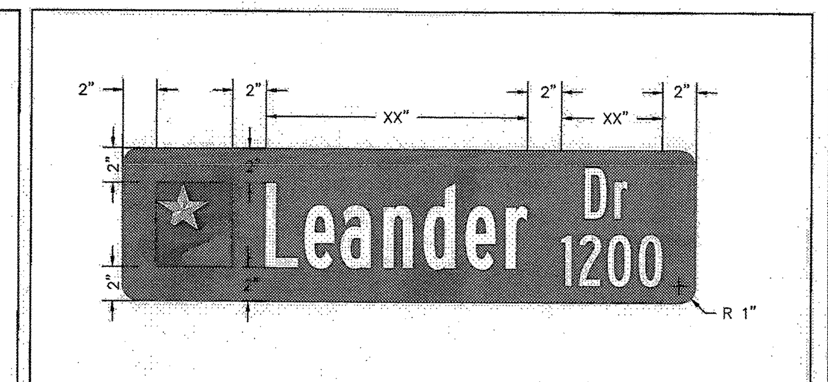

STREET NAME SIGNS:

1) HEIGHT SHALL BE EITHER:

a) 9 INCHES WITH 5-INCH UPPER CASE AND 3.75-INCH LOWER CASE LETTERING ON STREETS WITH SPEED LIMITS 40 MPH OR LESS OR ON STREETS WITH ANY SPEED LIMIT THAT HAVE NO MORE THAN TWO LANES;

b) 12 INCHES WITH 8-INCH UPPER CASE AND 6-INCH LOWER CASE LETTERING ON STREETS WITH SPEED LIMITS GREATER THAN 40 MPH AND MORE THAN TWO LANES.

2) 0.080 INCH THICK ALUMINUM BLANK. LENGTH DEPENDENT ON STREET NAME WITH A MINIMUM OF 24 INCHES. COVERED ON BOTH SIDES WITH 3M DIAMOND GRADE, WHITE, REFLECTIVE SHEETING (3M NUMBER 4090). STREET NAME WILL BE CUT OUT OF GREEN, 3M ELECTRO CUT FILM (3M NUMBER 1177C).

3) STREET DESIGNATION (DR, ST, TRL, RD, ETC.) IN UPPER RIGHT-HAND CORNER, BEGINNING BLOCK NUMBER UNDERNEATH. A CITY LOGO STICKER WILL BE PLACED ON THE LEFT-HAND SIDE OF THE SIGN AS SHOWN IN THE ABOVE ILLUSTRATION.

A. ALL FONTS SHALL BE TRAFFIC CAD SERIES B OR FHWA SERIES B.

B. NO WATER-BASED ADHESIVES ARE PERMISSIBLE FOR USE IN ANY PART OF SIGN.

C. CITY LOGO STICKERS SHALL BE 4.5 BY 5 INCHES FOR 9-INCH BLADES AND 7.2 BY 8 INCHES FOR 12-INCH BLADES.

D. LEANDER LOGO AVAILABLE FOR PURCHASE FROM PATHMARK TRAFFIC PRODUCTS AT (512) 392-2090
4435 HUNTER RD
SAN MARCOS, TX 78666

E. ADDITIONALLY, THE .JPG FILE FOR THE CITY LOGO IS AVAILABLE FROM THE CITY OF LEANDER ENGINEERING DEPARTMENT AT (512) 528-2700. ANY CITY LOGO STICKERS FROM OTHER SOURCES MUST FIRST BE APPROVED BY THE PUBLIC WORKS DEPARTMENT.

F. CITY LOGO STICKERS SHALL BE MADE OF 3M HIGH-INTENSITY REFLECTIVE MATERIAL.

City Of Leander, Texas
DETAIL #401-2
STREET NAME SIGN BLADES
03/28/18

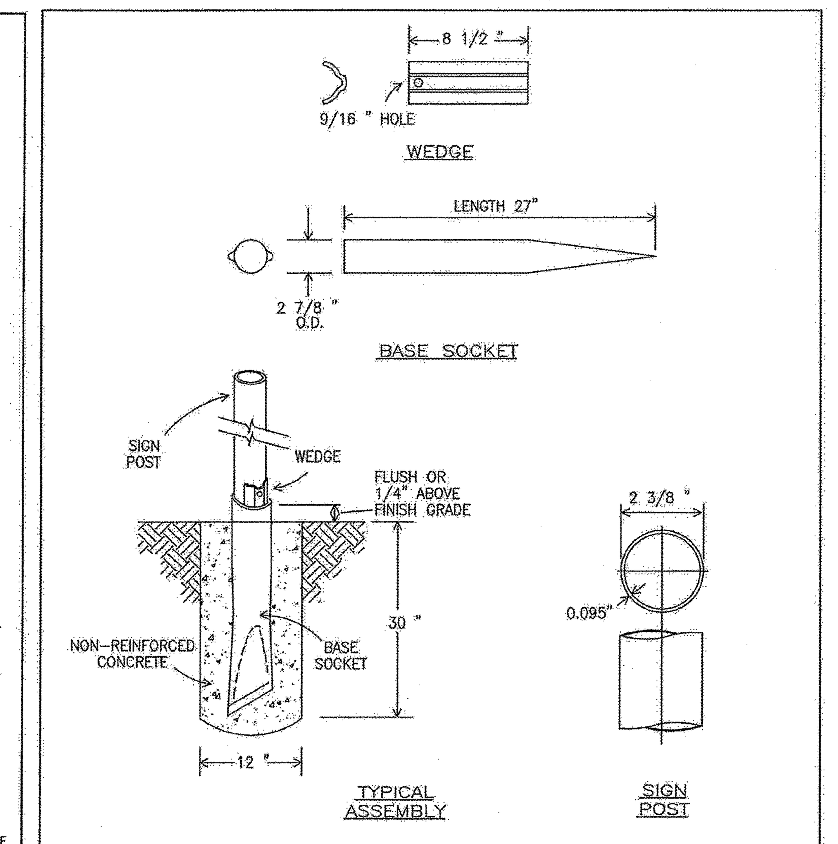

The Architect/Engineer assumes responsibility for appropriate use of this standard.

City Of Leander, Texas
401-3
POZ-LOC FOUNDATION
03/27/14

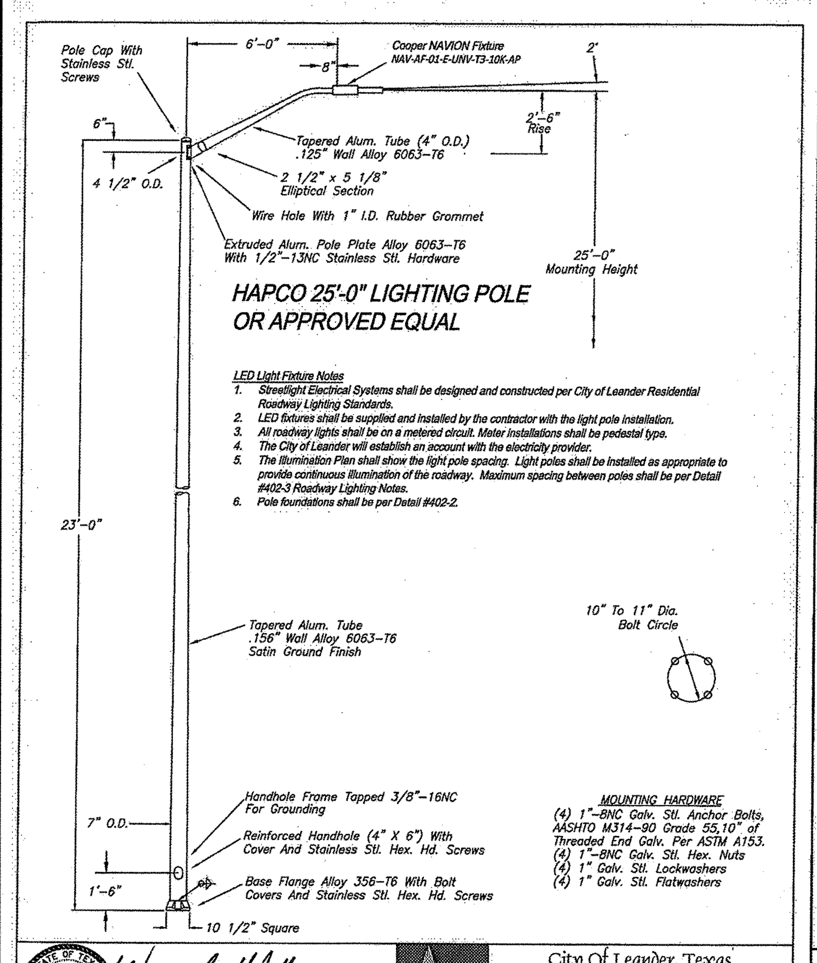

LED Light Fixture Notes
1. Streetlight Electrical Systems shall be designed and constructed per City of Leander Residential Roadway Lighting Standards.
2. LED fixtures shall be supplied and installed by the contractor with the light pole installation.
3. All roadway lights shall be on a metered circuit. Meter installations shall be pedestal type.
4. The City of Leander will establish an account with the electricity provider.
5. The Illumination Plan shall show the light pole spacing. Light poles shall be installed as appropriate to provide continuous illumination of the roadway. Maximum spacing between poles shall be per Detail #402-3 Roadway Lighting Notes.
6. Pole foundations shall be per Detail #402-2.

MOUNTING HARDWARE
(4) 1"–8NC Galv. Stl. Anchor Bolts, AASHTO M314–90 Grade 55,10" of Threaded End Galv. Per ASTM A153.
(4) 1"–8NC Galv. Stl. Hex. Nuts
(4) 1" Galv. Stl. Lockwashers
(4) 1" Galv. Stl. Flatwashers

City Of Leander, Texas
DETAIL #402-1
STANDARD LIGHTING POLE
2/22/16

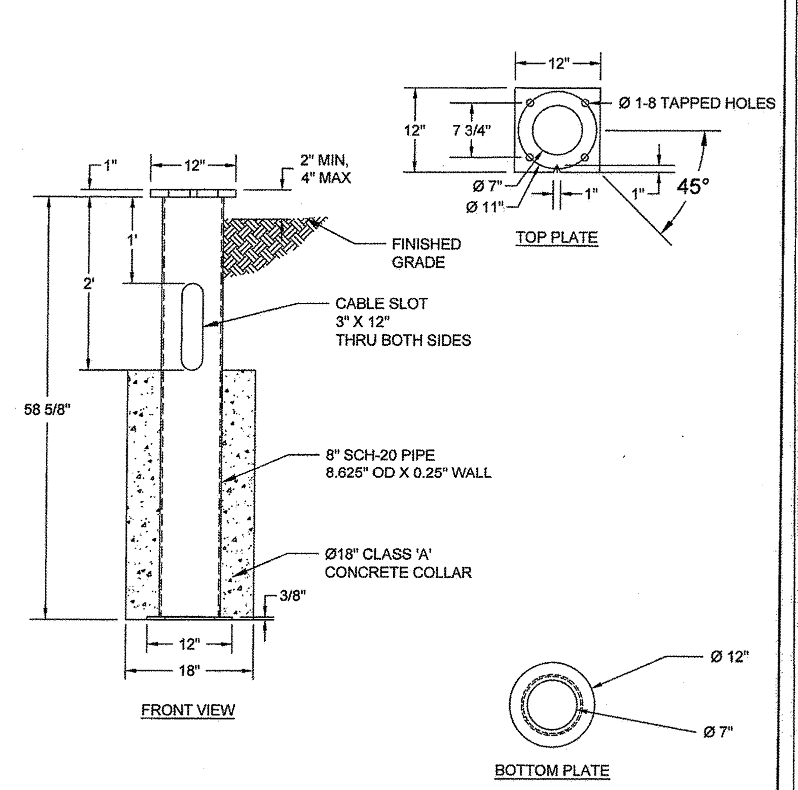

NOTES:
1. POLE BASE TO BE SALCo 1921-10 OR APPROVED EQUAL.
2. BASE TO BE HOT-DIPPED GALVANIZED AFTER FABRICATION.
3. HOLES IN BASE PLATE ARE Ø1"-8 TAPPED HOLES.
4. CONCRETE COLLAR TO EXTEND FROM BOTTOM PLATE TO BOTTOM OF CABLE SLOT.

City Of Leander, Texas
DETAIL #402-2
STANDARD LIGHTING POLE FOUNDATION
02/09/16

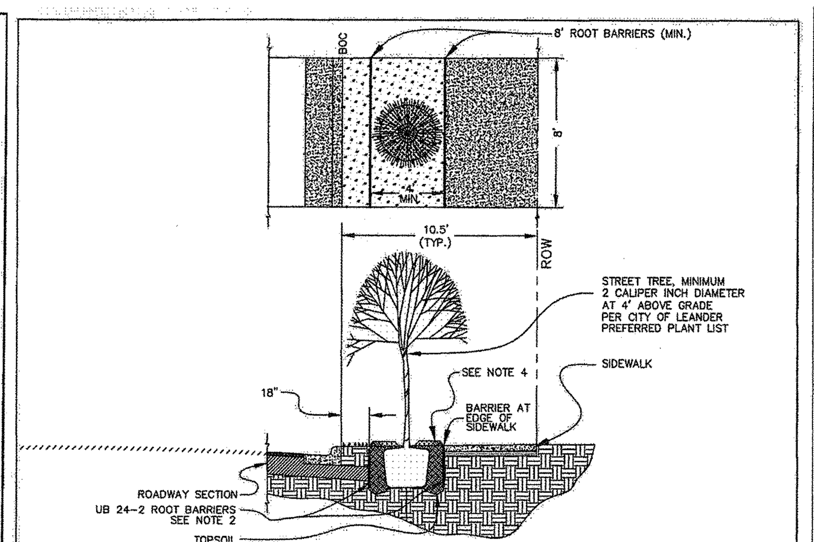

NOTES:
1. CONTRACTOR SHALL VERIFY ALL DEPTHS AND LOCATIONS OF EXISTING UTILITIES PRIOR TO INSTALLATION. CONTRACTOR IS RESPONSIBLE FOR REPAIR OF ALL DAMAGE THAT RESULTS FROM HIS WORK, INCLUDING ANY DAMAGE TO ROADWAY STRUCTURAL ELEMENTS SUCH AS CURB, FLEXIBLE BASE, GEOGRID, ETC.
2. "DEEPROOT" ROOT BARRIERS, OR APPROVED EQUAL, A MINIMUM OF TWENTY–FOUR INCHES (24") IN HEIGHT AND EIGHT FEET IN LENGTH (8') SHALL BE PROVIDED PARALLEL TO CURBLINE ON BOTH SIDES OF STREET TREES. ROOT BARRIERS SHALL BE PLACED WITH TOP OF ROOT BARRIER TWO INCHES (2") BELOW FINISHED GRADE AND RIBS FACING TOWARDS THE TREE.
3. TREES SHALL BE PLACED A MINIMUM OF TEN FEET (10') FROM ALL EXISTING AND PROPOSED WASTEWATER LINES, WATER SERVICES, STORM SEWER LINES, AND CURB INLETS.
4. A WATER RETENTION BASIN THREE INCHES (3") IN HEIGHT AND FOUR FEET (4') IN DIAMETER FORMED WITH TOPSOIL SHALL BE PROVIDED AROUND ALL TREES. INTERIOR OF BASIN SHALL BE FILLED WITH THREE INCH (3") LAYER OF SHREDDED BARK MULCH HELD THREE INCHES (3") BACK FROM THE TRUNK.
5. ALL TREES SHALL BE STAKED WITH 7' LENGTH STEEL "T" POSTS, PAINTED DARK GREEN. LOCATE POSTS 6" +/– FROM ROOTBALL. DO NOT DISTURB ROOTBALL. POSTS SHALL BE DRIVEN 2' INTO GROUND WITH 5' EXPOSED ABOVE GROUND. POSTS SHALL BE CONSISTENT HEIGHT AND ALIGNED PARALLEL TO ADJACENT CURBS. USE 12–GAUGE STRANDED CABLE WITH HOSE TO PROTECT TRUNK. ENSURE THERE IS NO SLACK IN WIRES.
6. IF SOLID ROCK IS ENCOUNTERED AT DEPTHS LESS THAN TWENTY–SIX INCHES (26") FROM FINISHED GRADE, INSTALL ROOT BARRIER TO TOP OF ROCK LAYER AND TRIM EXCESS LENGTH.

*THE ARCHITECT/ENGINEER ASSUMES RESPONSIBILITY FOR APPROPRIATE USE OF THIS STANDARD. DRAWING NOT TO SCALE.

City Of Leander, Texas
DETAIL #204-4
STREET TREE INSTALLATION
08/07/18

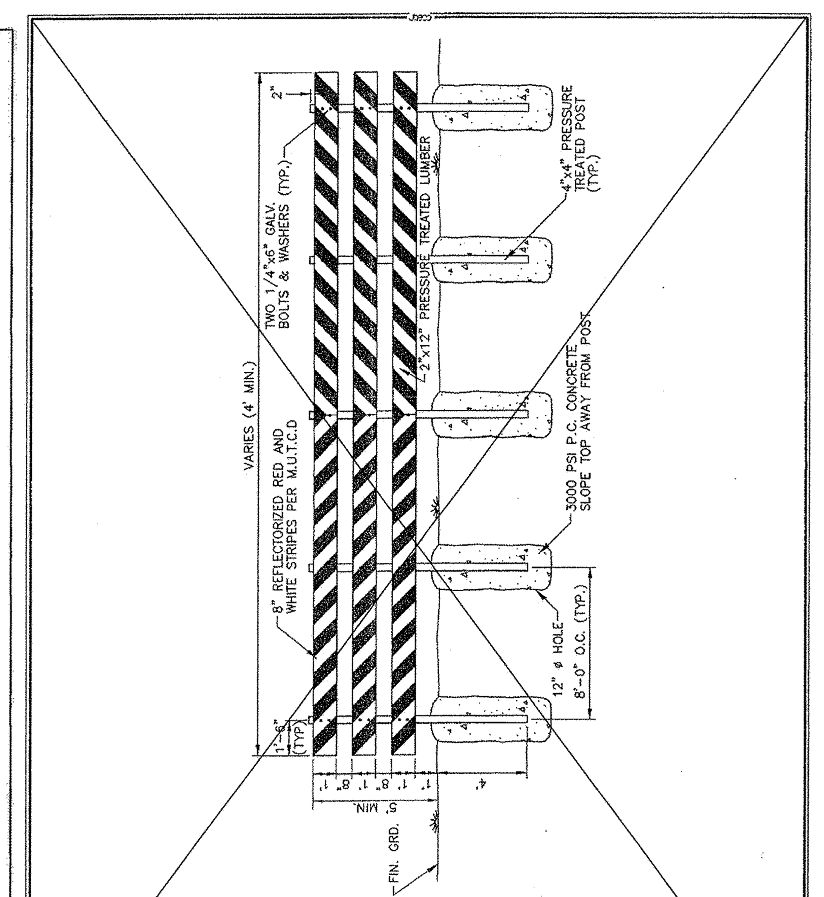

CITY OF LEANDER, TEXAS
Scale: NTS
Drawn by: RPW
TRAFFIC BARRICADE TYPE III
Detail No. 400–1

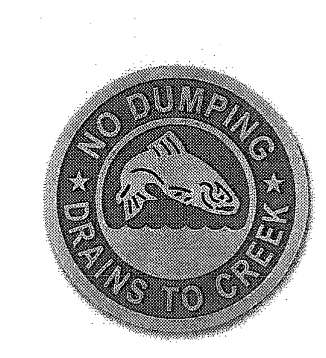

NOTES:
1. INSTALL 4" DIAMETER STAINLESS STEEL "NO DUMPING – DRAINS TO CREEK" MARKER, FACTORY PAINTED BLUE AS SHOWN, 2" ABOVE VERTICAL FACE OF INLET AT MIDPOINT OF ALL INLETS.
2. MARKER SHALL BE AFFIXED TO SURFACE WITH ADHESIVE PER MANUFACTURER'S RECOMMENDATIONS.
3. MARKER SHALL BE MANUFACTURED BY ALMATEK INDUSTRIES OR APPROVED EQUAL:
ALMATEK INDUSTRIES, INC.
2 JOY DRIVE
HACKETTSTOWN, NJ 07840
(800) 248–2080
WWW.ALMATEK.COM

City Of Leander, Texas
DETAIL #303-3
STORM DRAIN MARKERS
06/20/18

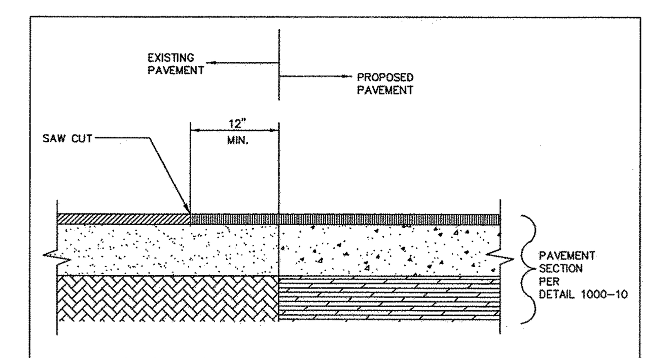

TYP. SECTION THRU EXIST. AND NEW PAVEMENT
N.T.S.

FOR CITY OF LEANDER USE

20–PICP–011

DESIGNED BY: LAW	DRAFTED BY: ZHL & CMC

REVISION	DATE
INITIAL SUBMITTAL	03.24.20
UPDATE #1 SUBMITTAL	05.18.20
UPDATE #2 SUBMITTAL	07.28.20

Carlson, Brigance & Doering, Inc.
Civil Engineering ◆ Surveying
FIRM ID #F3791
Main Office: 5501 West William Cannon Dr., Austin, Texas 78749
North Office: 12129 RR 620 N., Ste. 600, Austin, Texas 78750
Phone No. (512) 280-5160 Fax No. (512) 280-5165

SHEET NAME: STANDARD CONSTRUCTION DETAILS (2 OF 3)
JOB NAME: HOMESTEAD PHASE 3
PROJECT: STREET, DRAINAGE, WATER, AND WASTEWATER IMPROVEMENTS

8/10/2020
STATE OF TEXAS
LEE A. WHITED
102471
LICENSED PROFESSIONAL ENGINEER
CARLSON, BRIGANCE & DOERING, INC. ID# F3791

DATE: NOVEMBER 2019
JOB NUMBER: 5172
SHEET: 40 OF 61
SHEET NO. 40

FILE PATH:J:\AC3D\5172\dwg\5172-STD DETAILS.dwg - Aug 10, 2020 - 5:11pm

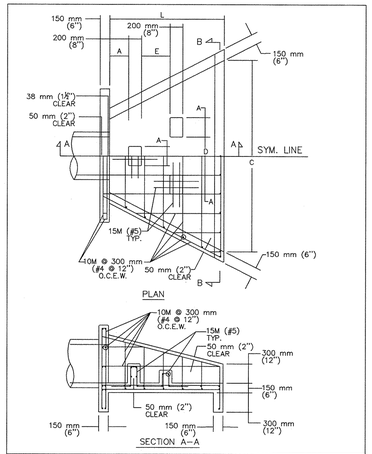

CITY OF AUSTIN DEPARTMENT OF WATERSHED PROTECTION AND DEVELOPMENT REVIEW		STANDARD HEADWALL AND ENERGY DISSIPATORS	STANDARD NO.
RECORD COPY SIGNED BY BILL GARDNER	08/20/07 ADOPTED	THE ARCHITECT/ENGINEER ASSUMES RESPONSIBILITY FOR APPROPRIATE USE OF THIS STANDARD.	508S–13 1 OF 2

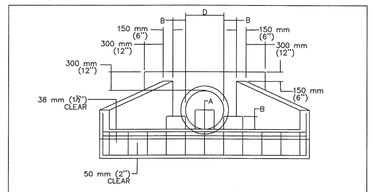

SECTION B–B

NOTES:

1. ALL CONCRETE SHALL BE TYPE "C" AS PER SPEC. 403S, CONCRETE FOR STURCTURES.
2. CHAMFER ALL EXTERNAL VISIBLE CORNERS.
3. DISSIPATOR BLOCKS REQUIRED ON DISCHARGE HEADWALLS ONLY.

D	457 mm (18")	533 mm (21")	610 mm (24")	685 mm (27")	765 mm (30")	838 mm (33")	914 mm (36")	1.067 m (42")	1.219 m (48")	1.372 m (54")	1.524 m (60")	
A	225 mm (9")	250 mm (10")	300 mm (12")	350 mm (14")	375 mm (15")	400 mm (16")	450 mm (18")	525 mm (21")	600 mm (24")	675 mm (27")	750 mm (30")	
B	150 mm (6")	175 mm (7")	200 mm (8")	225 mm (9")	250 mm (10")	275 mm (11")	300 mm (12")	350 mm (14")	400 mm (16")	450 mm (18")	500 mm (20")	
C	2.29 m (90")	2.67 m (105")	3.05 m (120")	3.43 m (135")	3.81 m (150")	4.19 m (165")	4.57 m (180")	5.33 m (210")	6.10 m (240")	6.86 m (270")	7.62 m (300")	
L	1.37 m (54")	1.60 m (63")	1.83 m (72")	2.06 m (81")	2.29 m (90")	2.51 m (99")	2.74 m (108")	3.20 m (126")	3.66 m (144")	4.11 m (162")	4.57 m (180")	
E	300 mm (12")	350 mm (14")	400 mm (16")	450 mm (18")	500 mm (20")	550 mm (22")	600 mm (24")	700 mm (28")	800 mm (32")	900 mm (36")	1000 mm (40")	

DIMENSIONS IN MILLIMETERS, METERS AND (INCHES).

DISCHARGE VELOCITIES GREATER THAN 3 METERS/SECOND (10 fps) REQUIRE ROCK OUTLET PROTECTION.

CITY OF AUSTIN DEPARTMENT OF WATERSHED PROTECTION AND DEVELOPMENT REVIEW		STANDARD HEADWALL AND ENERGY DISSIPATORS	STANDARD NO.
RECORD COPY SIGNED BY BILL GARDNER	08/20/07 ADOPTED	THE ARCHITECT/ENGINEER ASSUMES RESPONSIBILITY FOR APPROPRIATE USE OF THIS STANDARD.	508S–13 2 OF 2

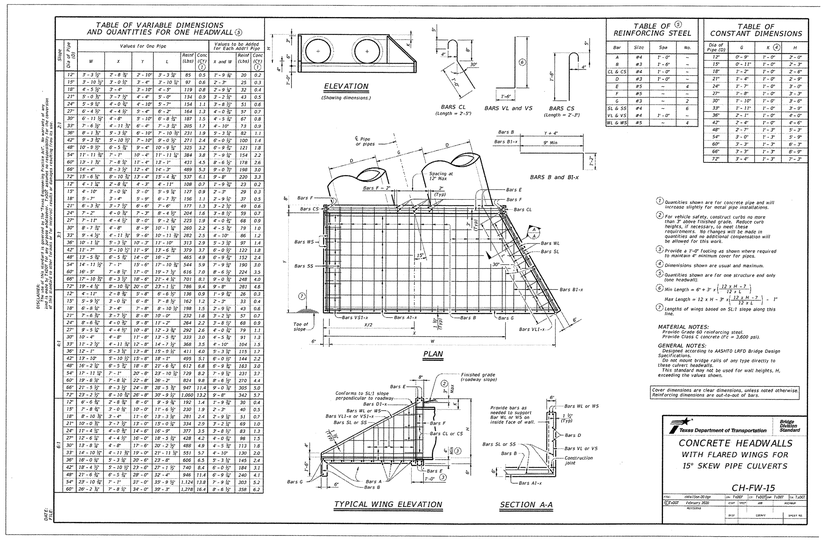

DESIGNED BY: LAW		DRAFTED BY: ZHL & CMC	

REVISION	DATE
INITIAL SUBMITTAL	03.24.20
UPDATE #1 SUBMITTAL	05.18.20
UPDATE #2 SUBMITTAL	07.28.20

Carlson, Brigance & Doering, Inc.
Civil Engineering ◆ Surveying
FIRM ID #F3791
Main Office
5501 West William Cannon Dr.
Austin, Texas 78749
Phone No. (512) 280-5160
North Office
12129 RR 620 N., Ste. 600
Austin, Texas 78750
Fax No. (512) 280-5165

SHEET NAME: STANDARD CONSTRUCTION DETAILS (3 OF 3)

JOB NAME: HOMESTEAD PHASE 3

PROJECT: STREET, DRAINAGE, WATER, AND WASTEWATER IMPROVEMENTS

8/10/2020

STATE OF TEXAS
LEE A. WHITED
102471
LICENSED
PROFESSIONAL ENGINEER
CARLSON, BRIGANCE & DOERING, INC.
ID# F3791

FOR CITY OF LEANDER USE

20–PICP–011

DATE	NOVEMBER 2019
JOB NUMBER	5172
SHEET	41 OF 61
SHEET NO.	41

FILE PATH:J:\ACD\5172\dwg\5172-STD DETAILS.dwg - Aug 10, 2020 - 5:10pm

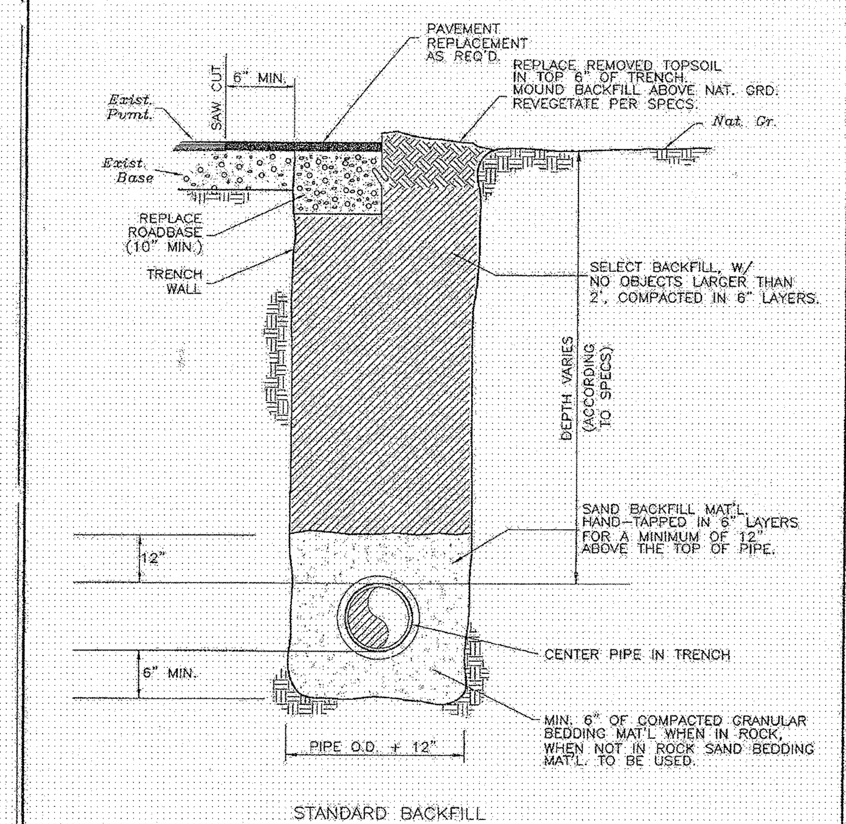

STANDARD BACKFILL

CITY OF LEANDER, TEXAS		
Scale: NTS	Approved / Date	Drawn by: SDK
TYPICAL PIPE TRENCH AND EMBEDMENT		Detail No. 104-1

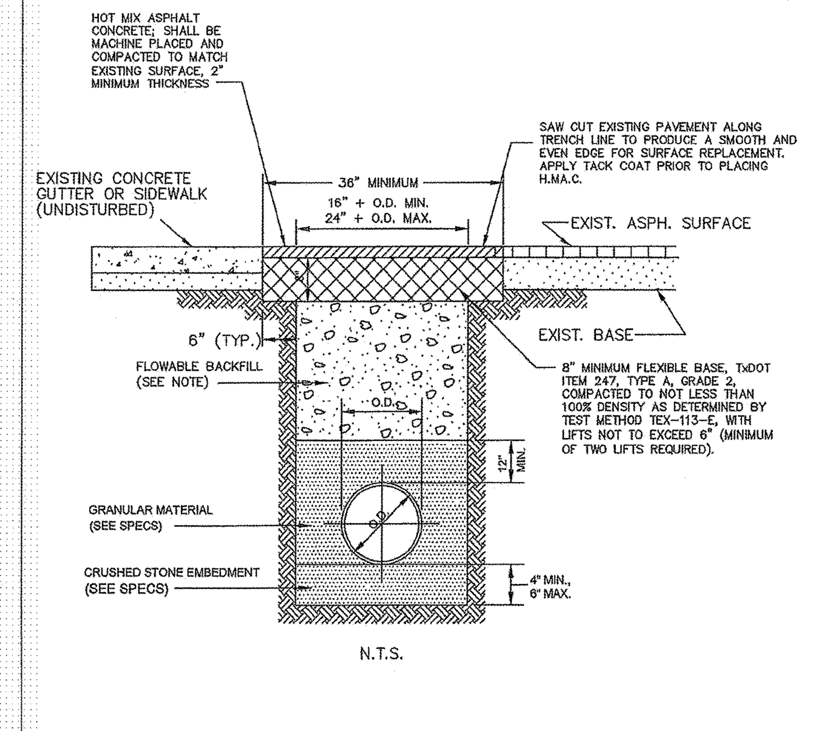

NOTES:

FLOWABLE BACKFILL SHALL CONSIST OF A MIXTURE OF NATIVE SOILS OR MANUFACTURED MATERIALS, CEMENT AND/OR FLY ASH, AND WATER WHICH PRODUCES A MATERIAL WITH UNCONFINED COMPRESSIVE STRENGTH OF BETWEEN 250 AND 450 PSI AFTER 28 DAYS. ANY MATERIALS USED SHALL BE PRIMARILY GRANULAR, WITH A PLASTICITY INDEX <12 AND WITH 100% PASSING A 3/4 INCH SIEVE. THE FLOWABLE MIXTURE SHALL BE MIXED IN A PUG MILL, CONCRETE MIXER, OR TRANSIT MIXER AND SHALL HAVE A MINIMUM SLUMP OF 5 INCHES. THE FLOWABLE MIXTURE MUST BE ALLOWED TO SET PRIOR TO THE PACEMENT OF ANY OVERLAYING MATERIAL.

ONE CONCRETE CYLINDER WILL BE REQUIRED FOR TESTING AND WILL BE FABRICATED BY THE CITY INSPECTOR.

THE PUBLIC WORKS DEPARTMENT IS TO BE CONTACTED AT 259-2640 PRIOR TO COMMENCEMENT OF BACKFILL OPERATIONS.

City Of Leander, Texas
DETAIL #104-2
TYPICAL TRENCH AND H.M.A.C. SURFACE REMOVAL AND REPLACEMENT DETAIL

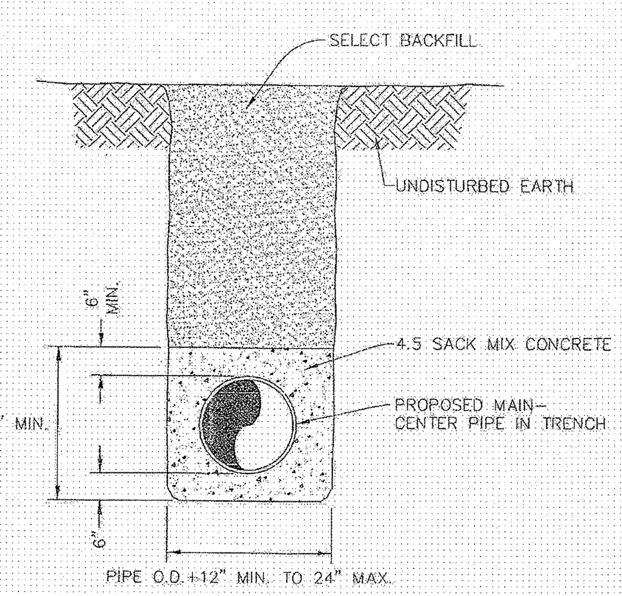

CITY OF LEANDER, TEXAS		
Scale: NTS	Approved / Date	Drawn by: RPW
CONCRETE ENCASEMENT		Detail No. 105-1

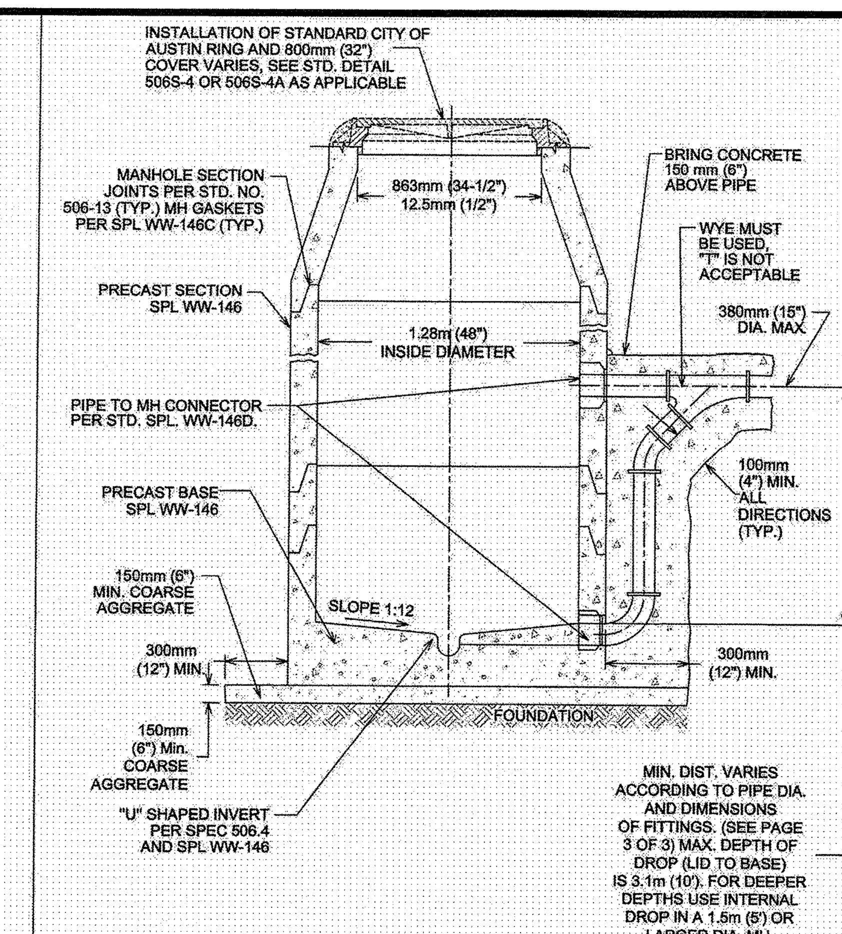

NOTES:
1. THE MANHOLE BASE SHALL BE BEDDED ON 150mm (6") COARSE AGGREGATE. THE CONTRACTOR SHALL LEVEL AND PLUMB THE BASE PRIOR TO SETTING THE PRECAST MANHOLE RISER SECTIONS ON THE PRECAST CONCRETE BASE.
2. MANHOLE FOUNDATION SHALL MEET OR EXCEED STD. SPEC 506.5B.

CITY OF AUSTIN AUSTIN WATER UTILITY	PRECAST MANHOLE WITH DROP INLET ON PRECAST BASE	
Kathi L Flowers 8/31/2011	THE ARCHITECT/ENGINEER ASSUMES RESPONSIBILITY FOR APPROPRIATE USE OF THIS STANDARD.	STANDARD NO. 506S-8 1 OF 3

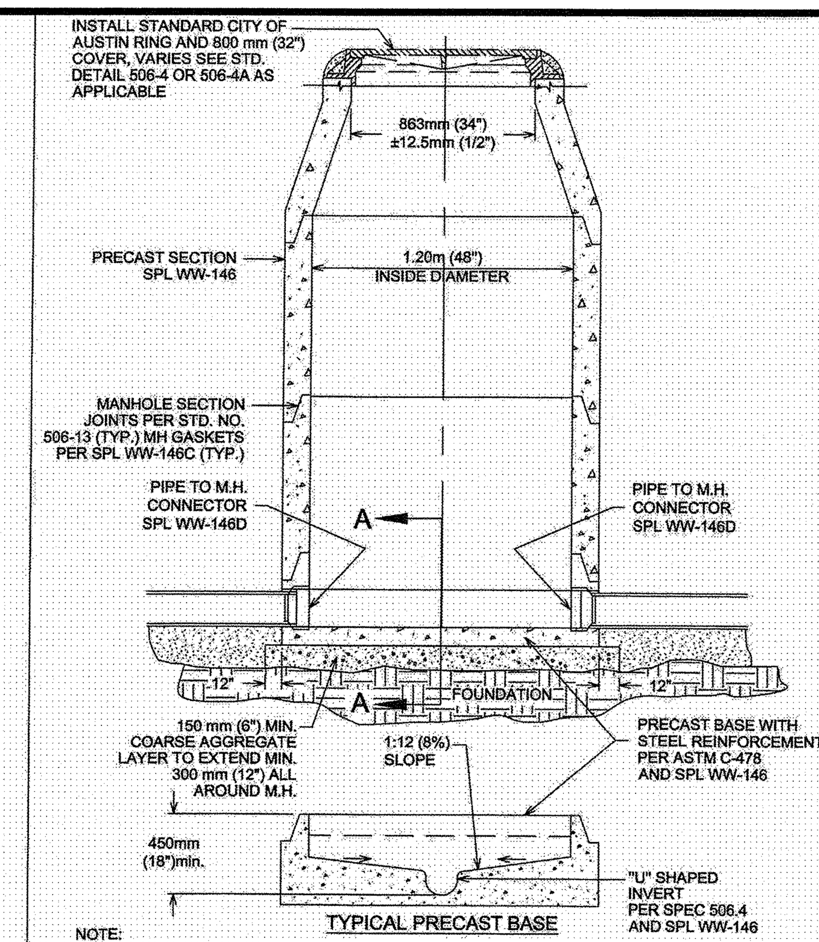

NOTE:
1. THE MANHOLE BASE SHALL BE BEDDED ON 150 mm (6") COARSE AGGREGATE. THE CONTRACTOR SHALL LEVEL AND PLUMB THE BASE PRIOR TO SETTING THE PRECAST MANHOLE RISER SECTIONS ON THE PRECAST CONCRETE BASE.
2. MH FOUNDATION SHALL MEET OR EXCEED STD. SPEC. 506.5B.

CITY OF AUSTIN AUSTIN WATER UTILITY	WASTEWATER MANHOLE ON PRECAST BASE	
Kathi L Flowers 8/31/2011	THE ARCHITECT/ENGINEER ASSUMES RESPONSIBILITY FOR APPROPRIATE USE OF THIS STANDARD	STANDARD NO. 506S-10

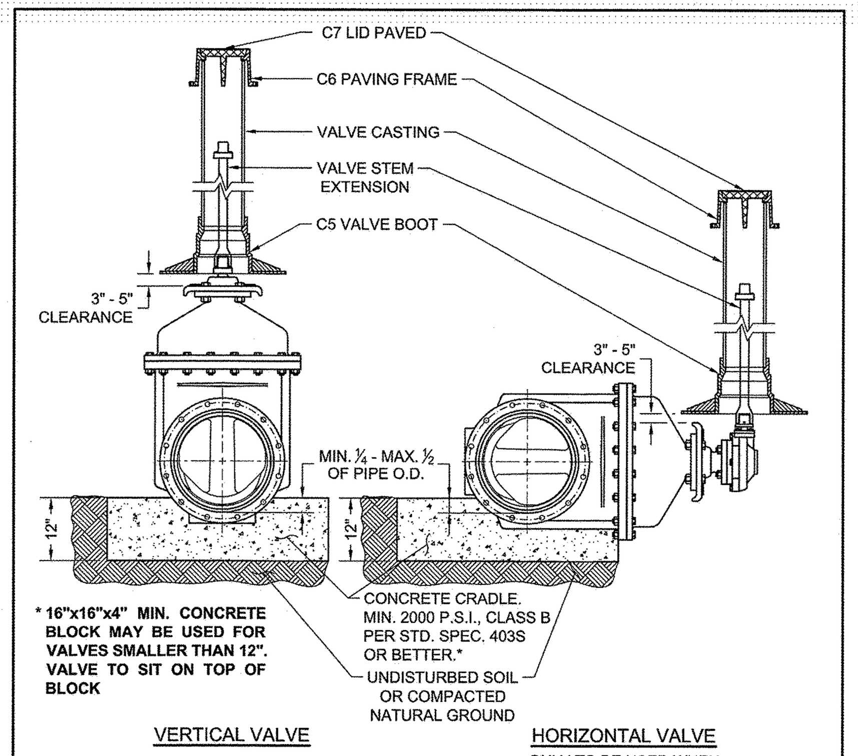

NOTES:
1. WELD SOCKET 2½" x 2" DEEP TO 1" SCH. 40 CARBON STEEL ROUND STEM EXTENSION, FITTED ON OPERATING NUT, [SCH. 80 FOR LENGTHS OVER 10'.]
2. VALVE CASTING SHALL BE 6" DI PIPE WITH BELL OR COLLAR CENTERED OVER VALVE BOOT.
3. NUT AT TOP OF VALVE EXTENSION ROD SHALL BE SQUARE 2" LONG WELDED TO TOP OF ROD.
4. VALVE STEM EXTENSIONS ARE REQUIRED ON ALL VALVES THAT EXCEED 3' DEEP FROM FINISHED GRADE. VALVE EXTENSIONS SHALL BE PLACED SUCH THAT THE EXTENSION NUT IS BETWEEN 12" AND 18" FROM FINISHED GRADE.

RECLAIMED WATER: ALL RECLAIMED PVC PIPE SHALL BE MANUFACTURED PURPLE PIPE. HDPE PIPE SHALL BE MANUFACTURED WITH PURPLE STRIPES. ALL OTHER PIPE AND APPURTENANCES SHALL BE MANUFACTURED PURPLE IF AVAILABLE. ALL PIPE AND FITTINGS THAT ARE NOT AVAILABLE FROM THE MANUFACTURER IN PURPLE SHALL BE PAINTED PURPLE PER SPL WW-3C. ALL BURIED DI AND CI PIPE AND FITTINGS SHALL ALSO BE WRAPPED IN PURPLE POLYETHYLENE PER SPL WW-27D. ALL COVERS SHALL HAVE **"RECLAIMED WATER"** CAST INTO THEM.

CITY OF AUSTIN AUSTIN WATER	TYPICAL GATE VALVE 4" - 16"	
RECORD COPY SIGNED BY KATHI L FLOWERS 05/18/2016 ADOPTED	THE ARCHITECT/ENGINEER ASSUMES RESPONSIBILITY FOR APPROPRIATE USE OF THIS STANDARD.	STANDARD NO. 511-AW-01 1 OF 4

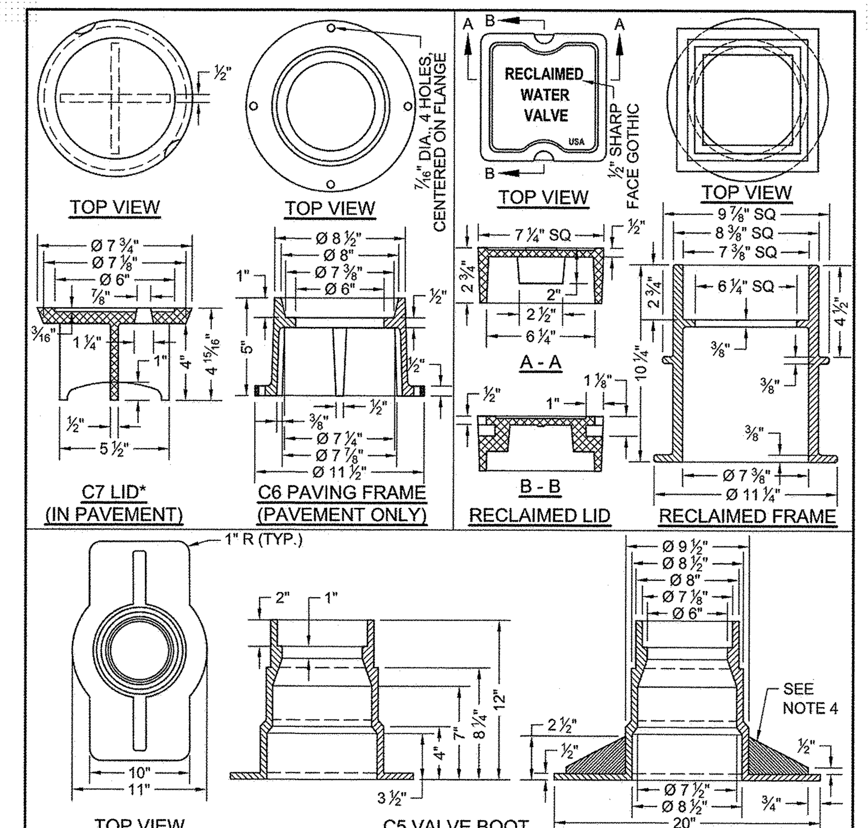

NOTES:
1. MATERIAL SHALL BE GRAY CAST IRON, ASTM A48, GRADE 30B.
2. THE MANUFACTURER'S IDENTIFICATION AND CASTING NUMBER, AND THE COUNTRY WHERE CAST, SHALL BE DISTINCTLY CAST ONTO EACH LID, FRAME, COLLAR AND BASE.
3. DRAFT AND SHRINKAGE ALLOWANCE SHALL BE IN ACCORDANCE WITH NORMAL FOUNDRY PRACTICE.
4. CASTING FINISH BY MANUFACTURER SHALL INCLUDE REMOVAL OF FINS AND FLASHING, AND PAINT WITH BLACK ASPHALT COATING.

WEIGHTS:

C7 LID: 13 LBS
RECLAIMED LID: 15 LBS
C6 FRAME: 23 LBS
RECLAIMED FRAME: 33 LBS
C5 BASE: 78 LBS

* LETTERING SHALL BE 1 ½"
2 PICK BAR SLOTS REQUIRED

CITY OF AUSTIN AUSTIN WATER	TYPICAL GATE VALVE 4" - 16"	
RECORD COPY SIGNED BY KATHI L FLOWERS 05/18/2016 ADOPTED	THE ARCHITECT/ENGINEER ASSUMES RESPONSIBILITY FOR APPROPRIATE USE OF THIS STANDARD.	STANDARD NO. 511-AW-01 2 OF 4

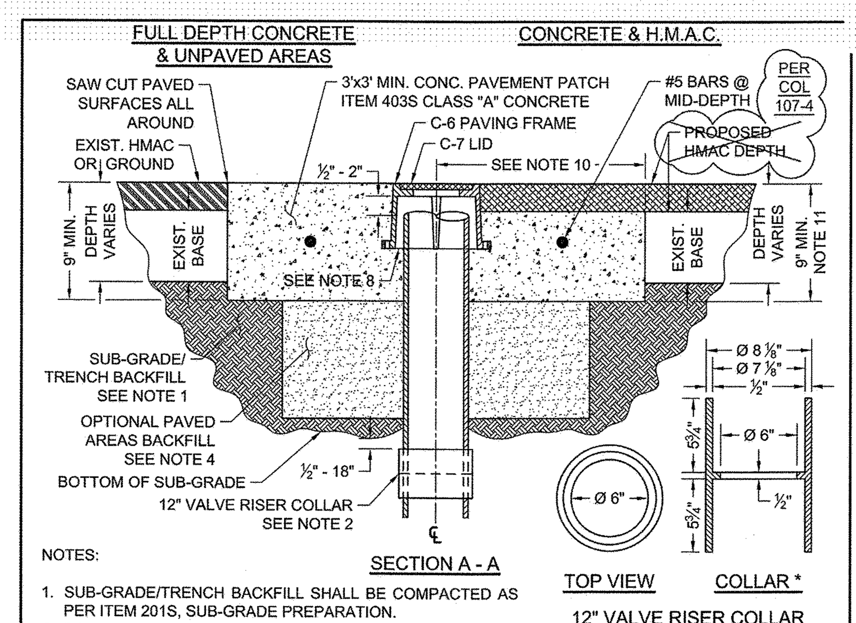

NOTES:
1. SUB-GRADE/TRENCH BACKFILL SHALL BE COMPACTED AS PER ITEM 201S, SUB-GRADE PREPARATION.
2. TO ADJUST VALVE CASTINGS TO FINAL GRADE, REMOVE RISER PIPE BELOW SUB-GRADE AND INSTALL APPROPRIATE LENGTH OF NEW RISER PIPE TO ACHIEVE FINAL GRADE. CONNECT THE TWO PIECES OF RISER PIPE WITH A 6" COLLAR MIN. 12" LENGTH APPROXIMATELY CENTERED ON THE JOINT WITH THE TOP OF SLEEVE LOCATED ½" - 18" BELOW SUB-GRADE. THE INSIDE "LIP" OF COLLAR TO BE PAINTED WITH FLUORESCENT WHITE PAINT OR COVERED WITH FLUORESCENT WHITE TAPE. ALTERNATE: FOR OPTIONAL SINGLE PIECE RISER INSTALLATION SEE SHEET 4 OF 4.
3. CLEAN VALVE BOX OF ALL DEBRIS DOWN TO THE NUT OF THE VALVE; NUT SHALL OPERATE WITH NO OBSTRUCTION.
4. WHERE CASTINGS TO BE REMOVED REQUIRE EXCAVATION GREATER THAN 20" DEEP, CONTRACTOR MAY ELECT TO FILL EXCAVATION WITH CONTROLLED LOW STRENGTH MATERIAL (SPEC. ITEM 402S) TO THE UNDERSIDE OF THE CONCRETE. PAVEMENT PATCH IN LIEU OF COMPACTED BACKFILL.
5. REINFORCING STEEL SHALL MEET SPEC. ITEM 406S.7.
6. NO MORE THAN 2 SECTIONS OF PIPE SHALL BE USED FROM VALVE TO FINAL GRADE.
7. BELL AND SPIGOT IS ACCEPTABLE FOR DEPTH OVER 18'.

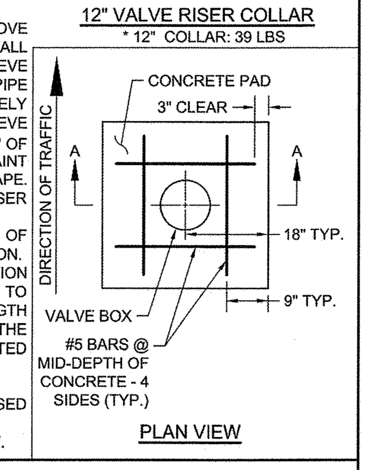

CITY OF AUSTIN AUSTIN WATER	TYPICAL GATE VALVE 4" - 16"	
RECORD COPY SIGNED BY KATHI L FLOWERS 05/18/2016 ADOPTED	THE ARCHITECT/ENGINEER ASSUMES RESPONSIBILITY FOR APPROPRIATE USE OF THIS STANDARD.	STANDARD NO. 511-AW-01 3 OF 4

NOTES (CON'T.):

8. PAVING FRAME SHALL BE FLUSH WITH THE CONC. PAD AND PLACED ½" - 2" ABOVE RISER PIPE (FRAME SHALL NOT REST ON RISER.)
9. IN UNPAVED AREAS, INSTALL ONE DELINEATOR STAKE IMMEDIATELY ADJACENT TO THE EDGE OF THE CONCRETE PAD. DELINEATOR SHALL BE BLUE FOR POTABLE WATER AND PURPLE FOR RECLAIMED WATER AND SHALL EXTEND AT LEAST 60" ABOVE GROUND. DELINEATORS SHALL HAVE 2" WIDE, WHITE IN COLOR, TYPE I REFLECTIVE TAPE MOUNTED DIAGONALLY AT 12" SPACING ON BOTH SIDES.
10. VALVE SHALL TYPICALLY BE CENTERED IN CONCRETE DIAMOND BUT MAY BE OFFSET WITH A MIN. OF 12" FROM CENTER OF VALVE LID TO EDGE OF CONCRETE IN ALL DIRECTIONS.
11. MIN. TOTAL DEPTH OF ASPHALT PLUS CONC. IS 9" AND MIN. DEPTH OF CONC. PAD SHALL BE 5"

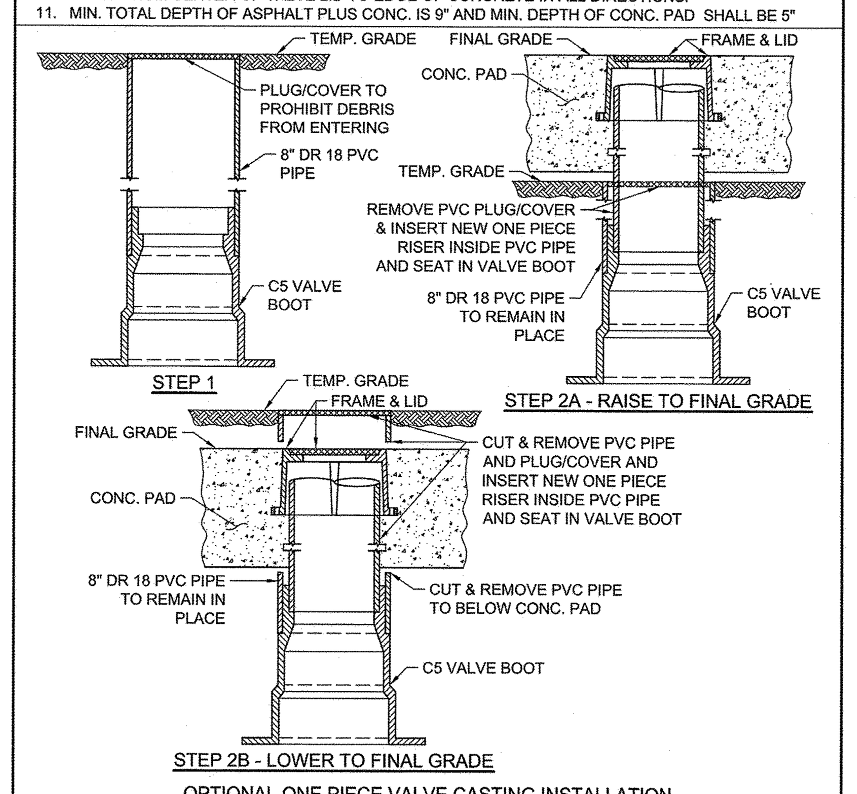

OPTIONAL ONE PIECE VALVE CASTING INSTALLATION

CITY OF AUSTIN AUSTIN WATER	TYPICAL GATE VALVE 4" - 16"	
RECORD COPY SIGNED BY KATHI L FLOWERS 05/18/2016 ADOPTED	THE ARCHITECT/ENGINEER ASSUMES RESPONSIBILITY FOR APPROPRIATE USE OF THIS STANDARD.	STANDARD NO. 511-AW-01 4 OF 4

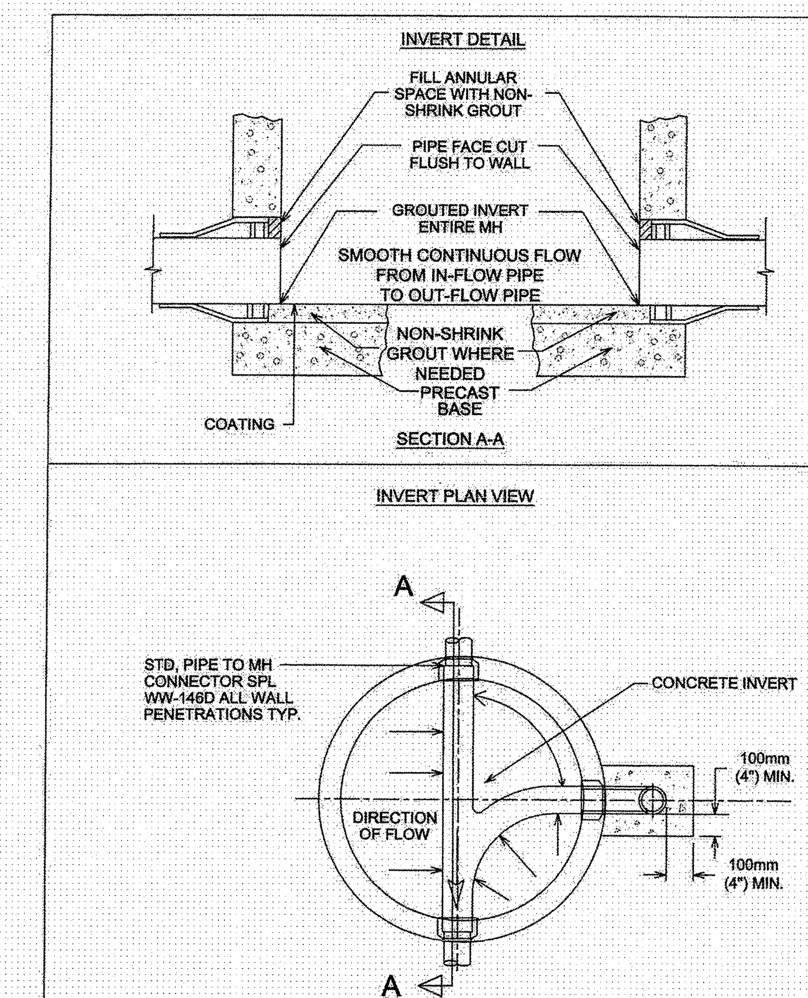

CITY OF AUSTIN AUSTIN WATER UTILITY	PRECAST MANHOLE WITH DROP INLET ON PRECAST BASE	
Kathi L Flowers 8/31/2011	THE ARCHITECT/ENGINEER ASSUMES RESPONSIBILITY FOR APPROPRIATE USE OF THIS STANDARD.	STANDARD NO. 506S-8 2 OF 3

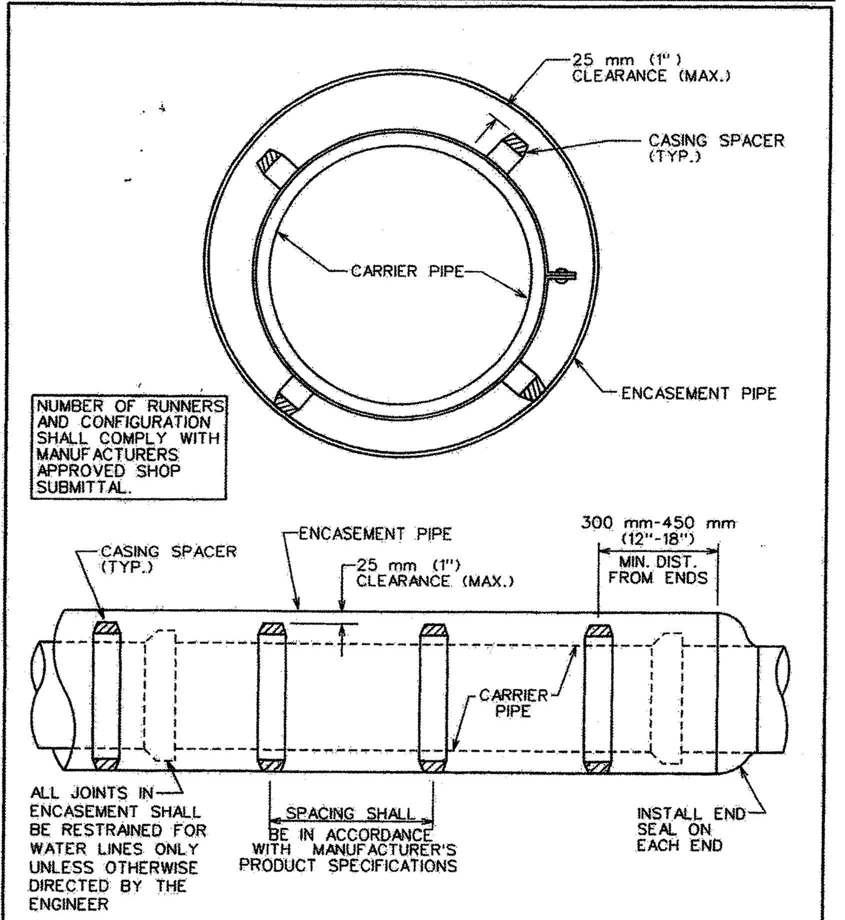

APPLICABLE REFERENCES
STANDARD SPECIFICATION: ITEM 510S.3 (19) W/WW STANDARD PRODUCTS LIST: SPLWW-575 FOR CASING SPACER AND SPLWW-575A FOR END SEAL.

CITY OF AUSTIN AUSTIN WATER UTILITY	ENCASEMENT DETAIL W/ CASING SPACERS	
Kathi L Flowers 2/28/… ADOPTED	THE ARCHITECT/ENGINEER ASSUMES RESPONSIBILITY FOR APPROPRIATE USE OF THIS STANDARD.	STANDARD NO. 501S-1

FILE PATH:J:\AC3D\5172\dwg\5172-W-WW DETAILS.dwg - Aug 10, 2020 - 5:10pm

DESIGNED BY:	DRAFTED BY:
LAW	ZHL & CMC

REVISION	DATE
INITIAL SUBMITTAL	03.24.20
UPDATE #1 SUBMITTAL	05.18.20
UPDATE #2 SUBMITTAL	07.28.20

Carlson, Brigance & Doering, Inc.
Civil Engineering ◆ Surveying
FIRM ID #F3791
Main Office: 5501 West William Cannon Dr., Austin, Texas 78749
North Office: 12129 RR 620 N., Ste. 600, Austin, Texas 78750
Phone No. (512) 280-5160 Fax No. (512) 280-5165

SHEET NAME: STANDARD WATER & WASTEWATER DETAILS (1 OF 2)

JOB NAME: HOMESTEAD PHASE 3

PROJECT: STREET, DRAINAGE, WATER, AND WASTEWATER IMPROVEMENTS

8/10/2020

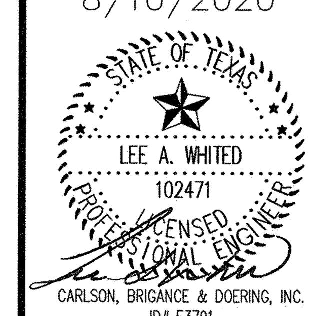

CARLSON, BRIGANCE & DOERING, INC.
ID# F3791

FOR CITY OF LEANDER USE

20-PICP-011

DATE	NOVEMBER 2019
JOB NUMBER	5172
SHEET	42 OF 61
SHEET NO.	42

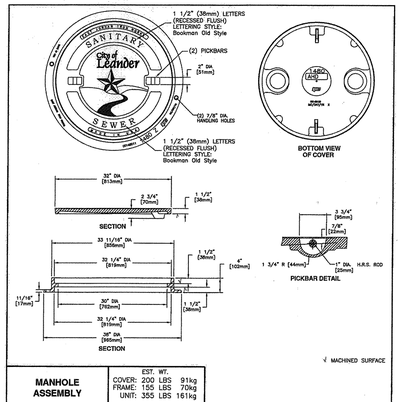

MANHOLE ASSEMBLY	EST. WT. COVER: 200 LBS 91kg FRAME: 155 LBS 70kg UNIT: 355 LBS 161kg
EAST JORDAN IRON WORKS PRODUCT NO. 00148107 OR NEENAH FOUNDRY DF-1274 LEANDER SANITARY	OPEN AREA N/A MAT'L SPEC. COVER – GRAY IRON ASTM A48 CL35B FRAME – GRAY IRON ASTM A48 CL35B LOAD RATING HEAVY DUTY (H20)

City Of Leander, Texas
DETAIL #707-1
SANITARY SEWER MANHOLE COVER

WAYNE S. WATTS 88134 LICENSED PROFESSIONAL ENGINEER
02/22/16

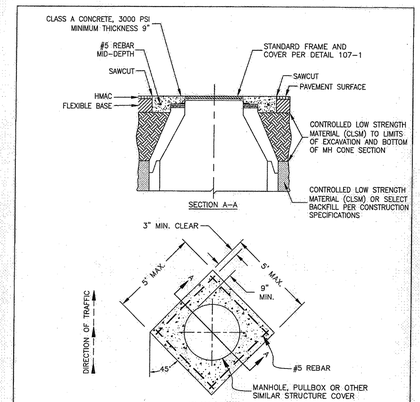

NOTES:
1. CONCRETE SHALL BE CLASS A, 3000 PSI MINIMUM AND SHALL BE REINFORCED WITH #5 BARS AS SHOWN. THE CONCRETE SHALL EXTEND TO SAW CUT PAVEMENT EDGE.
2. PLACEMENT OF CLSM SHALL BE BELOW FLEXIBLE BASE LAYER TO LIMITS OF EXCAVATION.
3. INSTALLATION OF HMAC OVER CONCRETE ADJUSTMENT SHALL NOT BE ALLOWED.
4. INSTALLATION OF CONCRETE CASTING ADJUSTMENT IS REQUIRED FOR ALL TYPES OF MANHOLES TO BE LOCATED IN THE ROADWAY.

City Of Leander, Texas
DETAIL #107-4
MANHOLE CASTING ADJUSTMENT

WAYNE S. WATTS 88134 LICENSED PROFESSIONAL ENGINEER
02/22/17

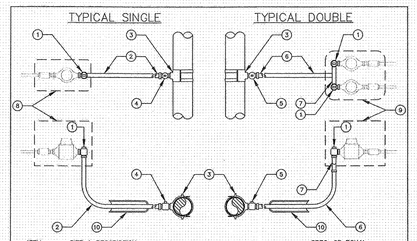

ITEM	SIZE & DESCRIPTION	SPEC. OR EQUAL
1	1" X 1" ANGLE METER STOP, LOCKING	AS APPROVED
2	1" SDR9 POLYETHYLENE TUBING	CLASS 250
3	EPOXY COATED DUCTILE IRON TAPPING SADDLE	AS APPROVED
4	1" CORPORATION STOP	AS APPROVED
5	1 1/2" CORPORATION STOP	AS APPROVED
6	1 1/2" SDR9 POLYETHYLENE TUBING	CLASS 250
7	BRASS U–BRANCH, 1 1/2" X 1"	FORD, OR EQUAL
8	METER BOX, SINGLE	DFW37–1–12–1CA, OR EQUAL
9	METER BOX, DOUBLE	DFW39F–12–1CA, OR EQUAL
10	3" SCH. 40 PVC SLEEVE FOR LONG SIDE SERVICES (TYP.)	

NOTES:
1. SERVICE SADDLE SHALL BE WRAPPED COMPLETELY WITH 8 MIL POLYETHYLENE FILM.
2. PIPING AND TUBING IN STREET RIGHT–OF–WAY SHALL BE BEDDED IN GRANULAR MATERIALS.
3. BRANCH CONNECTION AND BOTH ANGLE METER STOPS SHALL BE INSTALLED PRIOR TO FIRST METER INSTALLATION.
4. SLEEVES FOR LONG–SIDE SERVICE TO BEGIN AND TERMINATE 6" BEHIND BACK OF CURB.
5. TOP OF METER BOXES SHOULD BE 1" ABOVE GROUND.
6. METER BOX SHALL BE BEHIND CURB AT ROW/PROPERTY LINE OR EASEMENT. METER BOX SHALL NOT BE INSTALLED IN SIDEWALK, DRIVEWAY OR VEHICULAR TRAVEL AREA.
7. 1" X 3/4" BRASS METER BUSHING REQUIRED FOR 5/8" AND 3/4" METERS.
8. AXIS OF METER ASSEMBLY (LINE THROUGH METER STOP, METER, CHECK VALVE, PIPING AND OWNER'S CUTOFF) SHALL BE 11" BELOW TOP OF BOX. METER BOXES ARE SIZED TO ACCOMMODATE METER STOP, WATER METER AND CHECK VALVE.

City Of Leander, Texas
DETAIL #101-1
WATER SERVICE CONNECTIONS

WAYNE S. WATTS 88134 LICENSED PROFESSIONAL ENGINEER
11/21/15

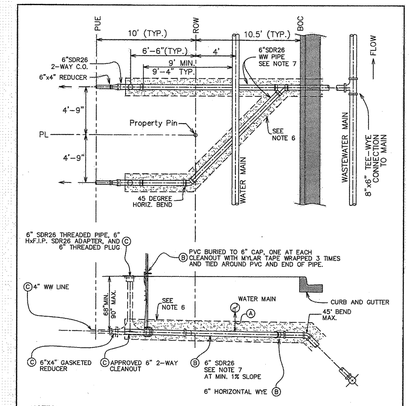

NOTES:
(A) WATER MAIN SHALL CROSS ABOVE 6" WASTEWATER SERVICE, TWO–FOOT (2') MINIMUM VERTICAL SEPARATION.
(B) TO BE INSTALLED AND INSPECTED DURING SUBDIVISION CONSTRUCTION. UTILITY CONTRACTOR INSTALLS SERVICE STUB WITH PLUG OR CAP.
(C) 2–WAY CLEANOUTS, 6" Hxf.I.P. ADAPTER, REDUCER, AND 4" SERVICE LINE INSTALLED BY BLDG. PLUMBER. PERMITS DEPARTMENT SHALL INSPECT CUSTOMER'S WASTEWATER LINE AND ALL APPURTENANCES INSTALLED BY BUILDING PLUMBER.

City Of Leander, Texas
DETAIL #101–2
1 OF 2
WASTEWATER SERVICE CONNECTIONS

WAYNE S. WATTS 88134 LICENSED PROFESSIONAL ENGINEER
04/26/13

NOTES:
1. DURING SUBDIVISION CONSTRUCTION, UTILITY CONTRACTOR INSTALLS WASTEWATER CONNECTION TO MAIN, 6" HORIZONTAL WYE FOR DOUBLE SERVICES, 6" SERVICE BRANCH, AND PLUG(S) FOR 6" SERVICE BRANCH STUB. CONTRACTOR TIES MYLAR TAPE TO END OF 6" STUB. WRAPS 3 TIMES AROUND. LENGTH OF PVC BURIED TO THE DEPTH OF THE 6" STUB AND TIES TO TOP OF PVC EXTENDING A MINIMUM OF 2 FEET ABOVE GROUND.

ALL WASTEWATER PIPING SHALL HAVE ELASTOMERIC GASKET TYPE JOINTS AND SHALL SLOPE DOWNWARD TO MAIN 1% (1/8" PER FOOT) MINIMUM TO 45° MAXIMUM. DEPTH OF SERVICE STUB AT PROPERTY LINE WILL BE SHOWN ON PLANS BY ENGINEER. IF GREATER THAN 8', OTHERWISE THE INSTALLED DEPTH WILL TYPICALLY BE 6 TO 8'. WASTEWATER SERVICE LINE TO MAIN REQUIRES DEFLECTION EXCEEDING 45°, REFER TO DETAIL 520–6. ALL INSTALLATIONS SHALL BE MADE IN ACCORDANCE WITH INFORMATION SHOWN ON APPLICABLE STANDARD DRAWINGS AND WILL BE INSPECTED BY CITY OF LEANDER CONSTRUCTION INSPECTION PERSONNEL.

2. CUSTOMER REMOVES PLUG FROM 6" SERVICE LINE STUB, INSTALLS 6" 2–WAY CLEANOUT, 6" BY 4" REDUCER, RISER FOR CLEANOUT, 6" Hxf.I.P. ADAPTER, 6" THREADED PLUG, AND 4" SERVICE LINE TO STRUCTURE. IF WASTEWATER WILL NOT SATISFACTORILY FLOW BY GRAVITY FROM STRUCTURE TO SEWER SERVICE STUB & WASTEWATER MAIN, PUMP EQUIPMENT MUST BE PROVIDED BY THE CUSTOMER AS PART OF CUSTOMER'S WASTEWATER SYSTEM.

3. CUSTOMER IS RESPONSIBLE FOR PUBLIC PIPING SYSTEM UNTIL WASTEWATER IS CONNECTED. ANY MISSING OR DAMAGED PARTS SHALL BE REINSTALLED BY CUSTOMER WHO SHALL GUARANTEE, FOR A PERIOD OF TWO (2) YEARS FROM DATE OF ACCEPTANCE THAT CONNECTIONS TO CITY SYSTEMS ARE FREE FROM DEFECTS IN WORKMANSHIP AND MATERIAL. CUSTOMER ALSO HAS THE RESPONSIBILITY TO ASSURE THAT ALL 2–WAY–CLEANOUTS REMAIN CLEAR OF SIDEWALKS AND OTHER OBSTRUCTIONS.

4. CITY OF LEANDER ACTIVITY IS LIMITED TO INSPECTION OF CONNECTIONS TO THE CITY'S WASTEWATER SYSTEM. FOR MAINTENANCE PURPOSES, THE CITY'S RESPONSIBILITY ENDS AT THE CUSTOMER'S WASTEWATER CONNECTION TO THE 2–WAY–CLEANOUT.

5. PIPING AND TUBING IN STREET RIGHT–OF–WAY AND IN EASEMENT AREA SHALL BE BEDDED IN GRANULAR MATERIALS AS REQUIRED BY CITY OF AUSTIN STANDARD SPECIFICATION SECTION 510.3 (14) UNLESS OTHERWISE NOTED ON THIS DETAIL. MATERIALS SHALL BE SPECIFIED IN SECTION 510.2 (2)(A) AND (3)(B). BACKFILL ABOVE THE GRANULAR BEDDING SHALL BE AS REQUIRED BY SECTION 510.3 (25). SERVICE LINES IN THESE AREAS SHALL HAVE A MINIMUM COVER BELOW FINAL STREET GRADE OF 42". ANY EXCEPTION MUST BE SPECIFICALLY APPROVED BY THE ENGINEER.

6. ALL SANITARY SEWER PIPE WITHIN 9' OF WATER MAINS SHALL BE BEDDED IN CEMENT STABILIZED SAND PER TCEQ CHAPTER 217 & 290 REQUIREMENTS. BEDDING SHALL EXTEND A MINIMUM OF 12" ABOVE PIPE, 4" BELOW PIPE, AND 12" BEYOND JOINTS AT EACH END.

7. PIPE MATERIAL FOR WASTEWATER SERVICES SHALL BE 6" SDR–26 PVC D2241 160 PSI RATED.

8. NO METER BOX OR CLEAN OUT SHALL BE SET IN SIDEWALK OR DRIVEWAY AREA WITHOUT WRITTEN APPROVAL FROM THE CITY ENGINEERING DEPT.

9. NO JOINTS SHALL BE PERMITTED BETWEEN THE 6"x6" HORIZONTAL WYE AND THE 6" 2–WAY CLEANOUT EXCEPT FOR THE 6" 45–DEGREE BEND REQUIRED FOR DOUBLE SERVICES.

City Of Leander, Texas
DETAIL #101–2
2 OF 2
WASTEWATER SERVICE CONNECTIONS

WAYNE S. WATTS 88134 LICENSED PROFESSIONAL ENGINEER
04/26/13

FIRE HYDRANTS LACKING INTEGRAL STORZ CONNECTOR SHALL BE REJECTED (NO STORZ ADAPTERS ALLOWED)

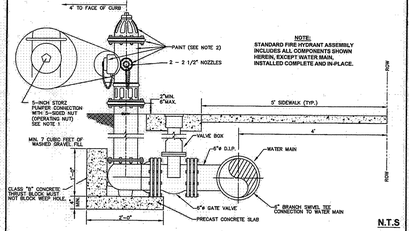

NOTES:
1. FIRE HYDRANT SHALL BE CLOW MEDALLION F2545, AMERICAN DARLING B–84–B–5, MUELLER SUPER CENTURION, EJ 5CD250 WATERMASTER, KENNEDY K81D GUARDIAN, AVK 2780, OR APPROVED EQUAL VIA SUBMITTAL PROCESS. THE PRIMARY FEATURES REQUIRED INCLUDE: FACTORY INSTALLED INTEGRAL 5–INCH STORZ PUMPER NOZZLE; 1.5–INCH PENT OPERATING NUT ON NOZZLE CAP; OPEN LEFT; FACTORY PAINTED.
2. HYDRANTS SHALL BE FACTORY PAINTED WITH FLINT ALUMINUM SILVER PAINT OR SHERWIN WILLIAMS SILVER B59511. HYDRANTS WILL NOT BE ACCEPTED IF PAINTED AFTER DELIVERY OR IF PAINT IS FLAT IN APPEARANCE.
3. ALL DUCTILE OR CAST IRON FITTINGS AND/OR PIPE SHALL BE POLYWRAPPED.
4. ALL HYDRANTS SHALL BE EQUIPPED WITH A BREAKAWAY FLANGE. ALL FITTINGS SHALL BE EQUIPPED WITH JOINT RESTRAINT "MEGALUG" OR APPROVED EQUAL. ALL ANCHOR FITTING TO BE CONCRETE THRUST BLOCKED.
5. BLUE, BI–DIRECTIONAL REFLECTIVE PAVEMENT MARKER, ULTIMATE WET NIGHT VISIBILITY SHALL BE INSTALLED PER MANUFACTURER'S RECOMMENDATION AT THE CORRESPONDING ROADWAY STATION OFFSET 6" (SIX INCHES) FROM CENTER OF STREET TO THE SBC HYDRANT IS LOCATED. AT INTERSECTIONS, MARKERS SHALL BE PLACED ON BOTH ROADWAYS ADJACENT TO HYDRANT.

LOCATION:
6. SET F.H. ON LOT LINE (EXTENDED WHEN POSSIBLE)
7. F.H. LOCATED AT STREET INTERSECTIONS SHALL BE PLACED A MINIMUM OF TEN FEET (10') FROM RADIUS TANGENT POINT
8. NO OBSTRUCTIONS SHALL BE PERMITTED WITHIN THREE FEET (3') IN ALL DIRECTIONS FROM F.H.
9. 5–INCH STORZ PUMPER NOZZLE SHALL FACE THE FIRE LANE OR TRAVEL WAY UNLESS OTHERWISE NOTED.

City Of Leander, Texas
DETAIL #101–4
STANDARD FIRE HYDRANT ASSEMBLY

WAYNE S. WATTS 88134 LICENSED PROFESSIONAL ENGINEER
02/05/19

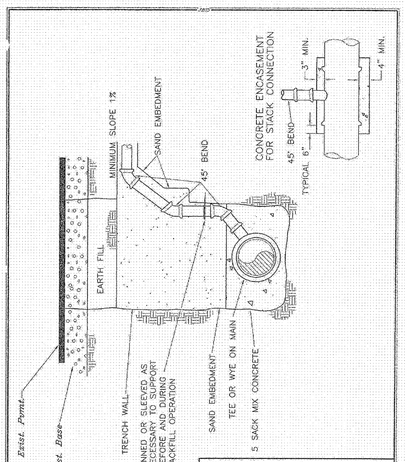

CITY OF LEANDER, TEXAS
Scale: NTS | Date | Drawn by: SDK
WATER & WASTEWATER DEEP SERVICE CONNECTION | Detail No. 102–2

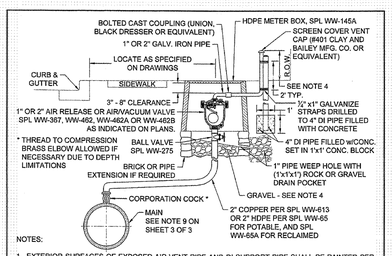

NOTES:
1. EXTERIOR SURFACES OF EXPOSED AIR VENT PIPE AND DI SUPPORT PIPE SHALL BE PAINTED PER SPL WW-3C. POTABLE WATER PIPE SHALL BE PAINTED SAFETY BLUE.
2. AIR VENT PIPE INSTALLATION SHALL BE AS NEAR AS PRACTICAL TO RIGHT-OF-WAY LINE WITH MINIMUM CLEARANCE OF 18" FROM ANY OBSTACLE.
3. HDPE METER BOX PENETRATION SHALL BE CORE BIT DRILLED. VOID SHALL BE FILLED WITH LINKSEAL LS 300 OR APPROVED EQUAL.
4. COMPACTED COARSE GRAVEL OR BROKEN STONE MIXED WITH SAND SLOPED TO DRAIN.
5. IN UNDEVELOPED AREAS, THE AIR VENT PIPE SHALL BE 4' MIN. IN HEIGHT SUPPORTED BY A 4" DIA. DI PIPE WHICH HAS BEEN FILLED WITH CONCRETE (SUPPORT PIPE SHALL BE 6' LONG, BURIED IN CLASS A CONCRETE OR CLSM 3' BELOW FINAL GRADE AND EXTENDING 3' ABOVE FINAL GRADE). INSTALL ONE DELINEATOR STAKE WITHIN 3' OF THE VAULT ON THE VEHICULAR ACCESS SIDE OF VAULT OR AS DIRECTED BY AUSTIN WATER. DELINEATOR SHALL BE BLUE FOR POTABLE WATER AND SHALL EXTEND AT LEAST 60" ABOVE GROUND. DELINEATORS SHALL HAVE 2" WIDE, WHITE IN COLOR, TYPE I REFLECTIVE TAPE MOUNTED DIAGONALLY AT 12" SPACING ON BOTH SIDES. IN DEVELOPED AREAS, THE AIR VENT PIPE SHALL BE 8' - 12" IN HEIGHT AND LOCATED NOT TO CONFLICT WITH SIDEWALK, DRIVEWAY, OR OTHER PEDESTRIAN TRAFFIC.
6. THE AIR VALVE AND ASSOCIATED PIPING SHALL BE INSTALLED ABOVE THE HIGHEST ELEVATION OF THE WATER MAIN. AIR VALVE PIPING, FROM THE WATER MAIN TO THE AIR VALVE, SHALL MAINTAIN A CONSTANT RISE, WITH NO DIPS, TO THE TOP OF THE GROUND.

1" - 2" AIR RELEASE OR AIR/VACUUM VALVE INSTALLATION - TYPE I

RECLAIMED WATER: ALL RECLAIMED PVC PIPE SHALL BE MANUFACTURED PURPLE PIPE. HDPE PIPE SHALL BE MANUFACTURED WITH PURPLE STRIPES. ALL OTHER PIPE AND APPURTENANCES SHALL BE MANUFACTURED PURPLE IF AVAILABLE. ALL PIPE AND FITTINGS THAT ARE NOT AVAILABLE FROM THE MANUFACTURER IN PURPLE SHALL BE PAINTED PURPLE PER SPL WW-3C. ALL BURIED DI AND CI PIPE AND FITTINGS SHALL ALSO BE WRAPPED IN PURPLE POLYETHYLENE PER SPL WW-27D. ALL COVERS SHALL HAVE "RECLAIMED WATER" CAST INTO THEM.

CITY OF AUSTIN AUSTIN WATER	AIR RELEASE AND AIR/VACUUM VALVE	
Kathi A. Flowers 05/18/2016 ADOPTED	THE ARCHITECT/ENGINEER ASSUMES RESPONSIBILITY FOR APPROPRIATE USE OF THIS STANDARD.	STANDARD NO. 511-AW-04 1 OF 3

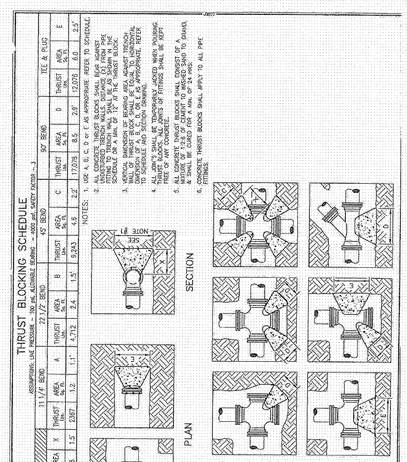

CITY OF LEANDER, TEXAS
Scale: NTS | Date | Drawn by: RPW
THRUST BLOCKING DETAILS | Detail No. 103–1

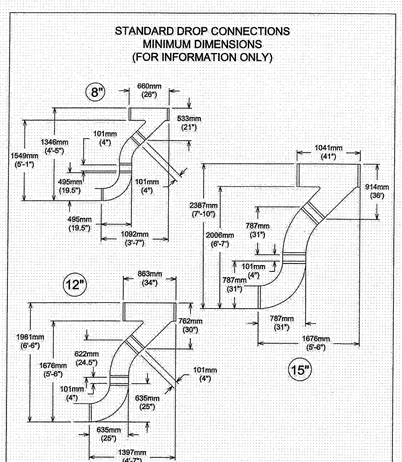

CITY OF AUSTIN AUSTIN WATER UTILITY	PRECAST MANHOLE WITH DROP INLET ON PRECAST BASE	
Kathi A. Flowers 8/31/2011	THE ARCHITECT/ENGINEER ASSUMES RESPONSIBILITY FOR APPROPRIATE USE OF THIS STANDARD.	STANDARD NO. 506S-8 3 OF 3

FOR CITY OF LEANDER USE

20–PICP–011

REVISION	DATE
INITIAL SUBMITTAL	03.24.20
UPDATE #1 SUBMITTAL	05.18.20
UPDATE #2 SUBMITTAL	07.28.20

DESIGNED BY: LAW
DRAFTED BY: ZHL & CMC

Carlson, Brigance & Doering, Inc.
Civil Engineering ◆ Surveying
Main Office 5501 West William Cannon Dr. Austin, Texas 78749 Phone No. (512) 280-5160
FIRM ID #F3791 12129 RR 620 N., Ste. 600 Austin, Texas 78750 Fax No. (512) 280-5165

SHEET NAME: STANDARD WATER & WASTEWATER DETAILS (2 OF 2)
JOB NAME: HOMESTEAD PHASE 3
PROJECT: STREET, DRAINAGE, WATER, AND WASTEWATER IMPROVEMENTS

8/10/2020
STATE OF TEXAS LEE A. WHITED 102471 LICENSED PROFESSIONAL ENGINEER
CARLSON, BRIGANCE & DOERING, INC. ID# F3791

DATE	NOVEMBER 2019
JOB NUMBER	5172
SHEET	43 OF 61
SHEET NO.	43

FILE PATH:J:\AC20\5172\dwg\5172-WW DETAILS.dwg - Aug 18, 2020 - 5:06pm

ELECTRICAL SYMBOL LEGEND

NOT ALL SYMBOLS SHOWN MAY BE USED

WIRING DEVICES

SYMBOL	DESCRIPTION
	2 POLE, 3 WIRE, 125V. SINGLE RECEPTACLE
	2 POLE, 3 WIRE, 125V. DUPLEX RECEPTACLE, MOUNT 18" AFF. UON
AF	2 POLE, 3 WIRE, 125V. DUPLEX ARC FAULT RECEPTACLE
IG	2 POLE, 3 WIRE, 125V. ISOLATED GROUND, ORANGE DUPLEX RECEPTACLE
WP	2 POLE, 3 WIRE, 125V. WEATHERPROOF DUPLEX RECEPTACLE
	2 POLE, 3 WIRE, 125V. QUADRUPLEX RECEPTACLE
D	2 POLE, 3 WIRE, 125V. DEDICATED DUPLEX RECEPTACLE
	SINGLE RECEPTACLE: 50A, 250V, 1ø, HUBBELL #9367 NEMA 6-50R
	SINGLE RECEPTACLE: 50A, 120V, 1ø, HUBBELL #9360 NEMA 5-50R
	TWIST LOCK RECEPTACLE: 20A, 120V, 1ø, HUBBELL #2310 NEMA L5-20R
	TWIST LOCK RECEPTACLE: 20A, 120V, 1ø, HUBBELL #2310 NEMA L5-20R
	TWIST LOCK RECEPTACLE: 30A, 250V, 1ø, HUBBELL #2620 NEMA L6-30R
	TWIST LOCK RECEPTACLE: 20A, 250V, 1ø, HUBBELL #2320 NEMA L6-20R
	SPECIAL PURPOSE RECEPTACLE
	SINGLE FLOOR RECEPTACLE
	QUADRUPLEX FLOOR RECEPTACLE
	DUPLEX FLOOR RECEPTACLE
	POWER POLE OR TELEPOWER POLE

CONDUIT & WIRING

SYMBOL	DESCRIPTION
	HOME RUN W/HOT, NEUTRAL AND GROUND
	HOME RUN W/ 2 HOT AND GROUND
	HOME RUN W/ 3 HOT AND GROUND
	HOME RUN W/ 2 HOT, NEUTRAL AND GROUND
	HOME RUN W/ 3 HOT, NEUTRAL AND GROUND
—UG—	UNDERGROUND GROUND
—UE—	UNDERGROUND ELECTRIC
—OE—	OVERHEAD ELECTRIC
—UT—	UNDERGROUND TELEPHONE
●	THERMAL WELD GROUND CONNECTION
■	MECHANICAL GROUND CONNECTION

DISTRIBUTION & CONTROLS

SYMBOL	DESCRIPTION
	PANELBOARD
	TRANSFORMER
	DISCONNECT SWITCH (AMPERAGE/POLES/FUSE SIZE/NEMA)
	COMBINATION MAGNETIC STARTER (AMPERAGE/POLES/TRIP/STARTER SIZE/NEMA)
	MAGNETIC STARTER (AMPERAGE/POLES/TRIP/STARTER SIZE/NEMA)
$M	MOTOR RATED SWITCH WITH THERMAL OVERLOADS
J	JUNCTION BOX
J DC	JUNCTION BOX, 28VDC
J 400	JUNCTION BOX, 400HZ
	PUSH-BUTTON
	EQUIPMENT CONNECTION
PC	PHOTO ELECTRIC CONTROL
C	CONTACTOR
TC	TIME CLOCK
MS	MOTION DETECTOR, IR=INFRARED
	CONTROL PANEL
PFC	POWER FACTOR CAPACITOR
VFD	VARIABLE FREQUENCY DRIVE
OS	OCCUPANCY SENSOR

COMMUNICATIONS

SYMBOL	DESCRIPTION
▼	TELEPHONE OUTLET WALL MOUNTED
	TELEPHONE OUTLET FLOOR MOUNTED
	COMBINATION DATA AND TELEPHONE OUTLET
▽	DATA OUTLET WALL MOUNTED
	DATA OUTLET FLOOR MOUNTED
S	SPEAKER CEILING MOUNTED
S	SPEAKER WALL MOUNTED
M	MICROPHONE
M	MICROPHONE FLOOR OUTLET
VC	VOLUME CONTROL
▽IC	INTERCOM OUTLET
	TELEPHONE BACKBOARD

LIGHTING

SYMBOL	DESCRIPTION
	EXISTING FLUORESCENT 2X4 FIXTURE TO REMAIN AND BE RE-USED
	REMOVE AND RELOCATE FLUORESCENT 2X4 FIXTURE, REFER TO LIGHTING PLAN FOR RELOCATED FIXTURES.
	NEW FLUORESCENT 2X4 LIGHTING FIXTURE
R	RELOCATED FLUORESCENT 2X4 LIGHTING FIXTURE
	HATCH INDICATES NON SWITCHED/EMERGENCY BATTERY PACK FIXTURE.
	FLUORESCENT 1X4 LIGHTING FIXTURE
	FLUORESCENT STRIP LIGHT
	SURFACE MOUNTED LIGHTING FIXTURE
	WALL MOUNTED LIGHTING FIXTURE
	RECESSED LIGHTING FIXTURE
	RECESSED WALL WASH LIGHTING FIXTURE
	EMERGENCY LIGHTING FIXTURE W/2 HEADS
	SINGLE FACE CEILING-MOUNTED EXIT SIGN
	SINGLE FACE WALL-MOUNTED EXIT SIGN
	DOUBLE-FACE CEILING-MOUNTED EXIT SIGN ARROWS AS INDICATED ON PLAN
	DOUBLE-FACE WALL-MOUNTED EXIT SIGN ARROWS AS INDICATED ON PLAN
$	SINGLE POLE, SINGLE THROW SWITCH, MOUNT 48" AFF. UON
$2	DOUBLE POLE, SINGLE THROW SWITCH, MOUNT 48" AFF. UON
$3	SINGLE POLE, DOUBLE THROW 3-WAY SWITCH, MOUNT 48" AFF. UON
$4	DOUBLE POLE, DOUBLE THROW 4-WAY SWITCH, MOUNT 48" AFF. UON
$FS	FAN SPEED CONTROL RHEOSTAT, MOUNT 48" AFF. UON
$K	KEY OPERATED SWITCH, MOUNT 48" AFF. UON
$P	SINGLE POLE, SINGLE THROW SWITCH W/PILOT LIGHT, MOUNT 48" AFF. UON
$T	INTERVAL TIMER SWITCH, MOUNT 48" AFF. UON
$D	DIMMER SWITCH, 6=600W, 10=1000W, 15=1500W, 20=2000W, MOUNT 48" AFF. UON
$OS	OCCUPANCY SENSOR SWITCH, MOUNT 48" AFF. UON
LC	LIGHTING CONTACTOR

FIRE ALARM

SYMBOL	DESCRIPTION
F	FIRE ALARM PULL STATION
F	FIRE ALARM AUDIO/VISUAL
V	FIRE ALARM VISUAL
F	FIRE ALARM BELL AND FLASHING LIGHT
F C	FIRE ALARM AUDIO/VISUAL CEILING MOUNT
H	FIRE ALARM HORN
SD	SMOKE DETECTOR
SD D	DUCT SMOKE DETECTOR
SD 120V	120V SMOKE DETECTOR
HD	HEAT DETECTOR
FACP	FIRE ALARM CONTROL PANEL
FAA	FIRE ALARM ANNUNCIATOR
MAG	MAGNETIC DOOR HOLDER
FSD	FIRE SMOKE DAMPER
W	SPRINKLER SYSTEM WATER FLOW SWITCH
T	SPRINKLER SYSTEM TAMPER SWITCH

SPECIAL SYSTEMS

SYMBOL	DESCRIPTION
TV	TELEVISION OUTLET
TV	TELEVISION FLOOR OUTLET
M	CAMERA MONITOR OUTLET
C	CLOCK WALL MOUNTED
C	CLOCK RECEPTACLE
CM	MASTER CLOCK AND PROGRAM CONTROL OUTLET
	BELL
	BUZZER
T	THERMOSTAT
PRS	PRESET RECALL STATION
ESD	ELECTROSTATIC DISCHARGE GROUND
KP	ELECTRONIC KEY PAD
DB	ELECTRONIC REMOTE DOOR BELL
CR	ELECTRONIC CARD READER
TV	CLOSED CIRCUIT SECURITY CAMERA
10	MOTOR, 10 HORSEPOWER SHOWN
	DATA OUTLET FURNITURE WHIP
J	JUNCTION BOX FURNITURE WHIP

ABBREVIATIONS

A	AMPERES OR TRIP AMPERES
ABV	ABOVE
AC	ALTERNATING CURRENT
ACT	ABOVE COUNTER TOP
A/C	AIR CONDITIONING
AE	AUSTIN ENERGY
AFF	ABOVE FINISHED FLOOR
AFG	ABOVE FINISHED GRADE
AIC	SYMMETRICAL AMPS INTERRUPTING CAPACITY
AWG	AMERICAN WIRE GAGE
A/R	AS REQUIRED
BAL	BALLAST
BD	BOARD
BLDG	BUILDING
C	CONDUIT
CAB	CABINET
CAP	CAPACITOR
CB	CIRCUIT BREAKER
CKT	CIRCUIT
CL	CURRENT LIMITING
COA	CITY OF AUSTIN
CONN	CONNECT OR CONNECTION
CONT'D	CONTINUED
CONTR	CONTRACTOR
CPT	CONTROL POWER TRANSFORMER
CT	CURRENT TRANSFORMER
CU	COPPER
DBL	DOUBLE
DIM	DIMENSION
DISC SW	DISCONNECT SWITCH
DC	DIRECT CURRENT
EA	EACH
EC	ELECTRICAL CONTRACTOR
EF	EXHAUST FAN
ELEC	ELECTRICAL
EM	EMERGENCY
EMT	ELECTRICAL METALLIC TUBING
ENCL	ENCLOSURE
EQUIP	EQUIPMENT
EWC	ELECTRIC WATER COOLER
FLA	FULL LOAD AMPS
FLEX	FLEXIBLE CONDUIT
FIX	FIXTURE
GC	GENERAL CONTRACTOR
GALV	GALVANIZED
GEN	GENERATOR
GFCI	GROUND FAULT CIRCUIT INTERRUPTER
GFI	GROUND FAULT INTERRUPTER
GND	GROUND
HDG	HOT DIPPED GALVANIZED
HOA	HAND-OFF-AUTO
HP	HORSEPOWER
HPS	HIGH PRESSURE SODIUM
HT	HEIGHT
HTR	HEATER
HZ	HERTZ
IMC	INTERMEDIATE METAL CONDUIT
INST	INSTRUMENT
JB	JUNCTION BOX
KCMIL	THOUSAND CIRCULAR MILLS
KV	KILOVOLTS
KVA	KILOVOLT AMPERES
KW	KILOWATT
KWH	KILOWATT HOURS
LA	LIGHTNING ARRESTOR
L-L	LINE TO LINE
L-N	LINE TO NEUTRAL
LTG	LIGHT OR LIGHTING
MANUF	MANUFACTURER
MC	MECHANICAL CONTRACTOR
MCB	MAIN CIRCUIT BREAKER

ABBREVIATIONS (CONT'D)

MCC	MOTOR CONTROL CENTER
MCP	MOTOR CIRCUIT PROTECTOR
MIN	MINIMUM
MLO	MAIN LUGS ONLY
MSB	MAIN SWITCH BOARD
MTD	MOUNTED
MTG	MOUNTING
MRCT	MULTI-RATIO CURRENT TRANSFORMER
MV	MERCURY VAPOR
N.C.	NORMALLY CLOSED
NEC	NATIONAL ELECTRICAL CODE
NEMA	NATIONAL ELECTRICAL MANUFACTURERS ASSOCIATION
NEUT	NEUTRAL
NIC	NOT IN THIS CONTRACT
N.O.	NORMALLY OPEN
NTS	NOT TO SCALE
OC	ON CENTER
OH	OVERHEAD
OL	OVERLOAD
ø	PHASE
P	POLE
PA	PUBLIC ADDRESS
PC	PHOTOELECTRIC
PEN	PENDANT
PNL	PANELBOARD
PRV	PRESSURE REDUCING VALVE
PVC	POLYVINYL CHLORIDE
R	RELOCATED
RECP	RECEPTACLE
REQ'D	REQUIRED
REQ'MTS	REQUIREMENTS
RGC	RIGID GALVANIZED STEEL CONDUIT
RM	ROOM
RMC	RIGID METALLIC CONDUIT
ROW	RIGHT OF WAY
SCH	SCHEDULE
SE	SERVICE ENTRANCE
SH	SHEET
SM	SURFACE MOUNT
SN	SOLID NEUTRAL
SOV	SOLENOID OPERATED VALVE
SPACE	SPACES(S) ONLY (NO BREAKER OR DEVICE)
SPARE	SPARE BREAKER OR DEVICE
SPD	SURGE PROTECTIVE DEVICE
SPECS	CONTRACT SPECIFICATIONS
SS	STAINLESS STEEL HARDWARE
SWBD	SWITCHBOARD
SW	SWITCH
SWGR	SWITCH GEAR
TB	TELEPHONE BACKBOARD
TTB	TELEPHONE TERMINAL BOARD
TYP	TYPICAL
UG	UNDERGROUND ELECTRIC
UL	UNDERWRITERS LABORATORIES
UON	UNLESS OTHERWISE NOTED
UT	UNDERGROUND TELEPHONE
V	VOLTS
VA	VOLT AMPERES
W	WATTS
W/	WITH
WH	WATER HEATER
WP	WEATHER PROOF
XFMR	TRANSFORMER
XFR SW	TRANSFER SWITCH
XMTR	TRANSMITTER
1/C	SINGLE CONDUCTOR CABLE
3/C	THREE CONDUCTOR CABLE USED WITH A NUMERAL, WHICH INDICATES HEIGHT OF ITEM AFF LEVEL
S.D. BARE CU.	SOFT DRAWN BARE COPPER

2 working days Call before you Dig. CALL 811

CONDUIT AND WIRING LEGEND

	NEW
	EXISTING TO BE REMOVED
	EXISTING TO REMAIN
—— UE —— UE ——	UNDERGROUND ELECTRICAL
—— UF —— UF ——	UNDERGROUND FIBER OPTIC
—— UT —— UT ——	UNDERGROUND TELEPHONE
—— UG —— UG ——	UNDERGROUND GROUNDING
—— OE —— OE —— OE ——	OVERHEAD ELECTRICAL

GENERAL ELECTRICAL NOTES

1. ALL WORK SHALL BE PERFORMED IN ACCORDANCE WITH THE NATIONAL ELECTRICAL CODE, ALL CITY, COUNTY, AND STATE REGULATIONS, NFPA, ANSI, UL, IEEE, AND THE LOCAL CODE AUTHORITY HAVING JURISDICTION. THE ELECTRICAL CONTRACTOR SHALL BE RESPONSIBLE FOR ALL PERMITS AND INSPECTIONS.
2. ALL ELECTRICIANS SHALL BE LICENSED BY THE APPROPRIATE CITY, STATE, OR LOCAL CODE AUTHORITY HAVING JURISDICTION.
3. THE ELECTRICAL CONTRACTOR SHALL FOLLOW ALL OSHA AND OWNER SAFETY RULES AS REQUIRED TO WORK ON THIS SITE.
4. ALL INSTALLATIONS SHALL BE DONE IN A NEAT AND WORKMAN LIKE MANNER.
5. ALL POWER OUTAGES SHALL BE PERFORMED DURING NON-BUSINESS HOURS. COORDINATE ALL POWER OUTAGES WITH THE OWNER. NOTIFY THE OWNER IN WRITING 10 DAYS PRIOR TO SCHEDULING ANY POWER OUTAGES.
6. THE ELECTRICAL CONTRACTOR SHALL PROVIDE ALL TEMPORARY ELECTRICAL POWER AND LIGHTING REQUIRED FOR THIS PROJECT.
7. THE DEMOLITION DRAWINGS (IF APPLICABLE) ARE DIAGRAMMATIC IN NATURE. THE ELECTRICAL CONTRACTOR SHALL BE THOROUGHLY FAMILIAR WITH THE PROJECT SCOPE OF WORK PRIOR TO SUBMITTING THEIR BID.
8. THE ELECTRICAL CONTRACTOR SHALL VERIFY THE ELECTRICAL REQUIREMENTS OF ALL OWNER PROVIDED EQUIPMENT AND SHALL NOTIFY THE ENGINEER IMMEDIATELY OF ANY DISCREPANCIES.
9. ALL WORK SHOWN ON DRAWINGS IS NEW UNLESS OTHERWISE NOTED.
10. ALL GROUNDING SHALL BE PER NEC AND LOCAL CODES.
11. ALL ELECTRICAL CONSTRUCTION ON THE PROJECT SHALL CONFORM TO THE NEC AND ALL OTHER AUTHORITIES HAVING JURISDICTION. THE CONTRACTOR SHALL OBTAIN ALL PERMITS REQUIRED AND PAY ALL FEES.
12. ALL WIRING SHALL BE FREE OF SHORTS AND GROUNDS. NO CIRCUIT WIRING SHALL BE LOADED BEYOND THE PERMITTED AMPACITIES ALLOWED BY THE NEC. ALL WIRE SIZES ARE FOR COPPER.
13. CONTRACTOR SHALL FIELD VERIFY ALL CONDITIONS AND DIMENSIONS PRIOR TO SUBMITTING BID.
14. ELECTRICAL CONTRACTOR SHALL PROVIDE ALL EQUIPMENT AND MATERIALS NECESSARY TO MAKE A COMPLETE AND WORKABLE JOB INCLUDING FINAL HOOK-UP OF ALL EQUIPMENT.
15. FIRE STOP SHALL BE PROVIDED AT ALL LOCATIONS WHERE ELECTRICAL EQUIPMENT OR SYSTEMS PENETRATE FIRE RATED WALLS. SEE ARCHITECTURAL PLANS FOR RATED WALL LOCATIONS. CONTROL WIRING TO MECHANICAL EQUIPMENT IS NOT SHOWN ON THESE SHEETS.
16. RISER AND ONE-LINE DIAGRAMS ARE MEANT TO SHOW ONLY VERTICAL AND ELECTRICAL RELATIONSHIPS AND THEREFORE MAY NOT INCLUDE ALL REQUIRED EQUIPMENT, DEVICES AND ACCESSORIES.
17. EQUIPMENT INTERRUPTING CAPACITIES SPECIFIED IN THE CONTRACT DOCUMENTS ARE BASED UPON EQUIPMENT CHARACTERISTICS AND IMPEDANCES SHOWN ON THE DRAWINGS. IF ACTUAL INSTALLED EQUIPMENT DEVIATES FROM THESE CHARACTERISTICS OR HAS LOWER IMPEDANCES THE CONTRACTOR SHALL INCREASE THE INTERRUPTING CAPACITIES OF ALL ITEMS ON THE LOAD SIDE OF THE DEVIANT EQUIPMENT IN DIRECT PROPORTION TO THE CHANGED CHARACTERISTICS. INTERRUPTING CAPACITIES SHALL NOT BE REDUCED TO VALUES LESS THAN THOSE REQUIRED BY THE CONTRACT DOCUMENTS.
18. EQUIPMENT SIZES ARE AS DESIGNED. CIRCUIT BREAKERS, CONDUIT, MOTOR STARTERS, DISCONNECT SWITCHES, PLUG-IN'S, ETC., SHALL BE ADJUSTED TO THE EQUIPMENT SUBMITTED AND APPROVED FOR INSTALLATION ON THIS PROJECT.
19. REFER TO ARCHITECTURAL OR CIVIL DRAWINGS FOR SITE INFORMATION.
20. LIGHT FIXTURE MOUNTING HEIGHTS ARE MEASURED BETWEEN THE FLOOR AND THE BOTTOM OF THE FIXTURE.

ELECTRICAL DRAWING INDEX

E1.0 ELECTRICAL NOTES, SYMBOLS AND ABBREVIATIONS
E1.1 ELECTRICAL SPECIFICATIONS
E2.0 ELECTRICAL SITE LIGHTING PLAN
E3.0 ELECTRICAL DETAILS
E4.0 SITE LIGHTING PHOTOMETRICS PLAN
E5.0 RESIDENTIAL ROADWAY LIGHTING STANDARDS
E5.1 RESIDENTIAL ROADWAY LIGHTING STANDARDS
E5.2 RESIDENTIAL ROADWAY LIGHTING STANDARDS

HOMESTEAD PHASE 3
STREET LIGHTING

COUNTY ROAD 279 LEANDER TEXAS 78641

2490120 STATE OF TEXAS STEVE L. KANETZKY 84696 LICENSED PROFESSIONAL ENGINEER 2/25/20

SKE
S. Kanetzky Engineering, LLC.
5920 W. William Cannon
Bldg. 7, Suite 200
Austin, Texas 78749
(512) 326-3380
www.skaneng.com
TBPE Firm No. F-2356
SKE PROJECT # 2490120

Filename:
Scale: AS NOTED
Drawn By: GB
Checked By: SK
Date: 02/14/2020
DWG Number:

Title: **ELECTRICAL NOTES, SYMBOLS, & ABBREVIATIONS**

Sheet: 44 OF 61

E1.0

PLOT DATE: 02/25/20 12:32:21PM, LAYOUT TAB: E1.0, USER: gbaker, DWG NAME: K:\Projects\2020\2490120-CBD-Homestead Phase 3 Street Lighting\01 Design Phase_CAD\2490120-E10.dwg

ELECTRICAL SPECIFICATIONS

PART 1 – GENERAL

1.01 WORK INCLUDED

A. ELECTRICAL SYSTEMS – ALL WORK SHALL BE PERFORMED PER BUILDING SPECIFICATIONS.

1.02 RELATED WORK

A. THE WORK COVERED BY THIS SPECIFICATION CONSISTS OF FURNISHING ALL LABOR, SUPPLIES AND MATERIALS, SHOP DRAWINGS AND A LIST OF MAKE AND CATALOG NUMBERS OF ALL EQUIPMENT AND MATERIALS TO BE INSTALLED AND PERFORMING ALL OPERATIONS, INCLUDING INSTALLATION OF LIGHTING FIXTURES, ELECTRICAL EQUIPMENT, CUTTING AND PATCHING, COORDINATION WITH OTHER TRADES ON THE JOB, ETC., NECESSARY FOR THE INSTALLATION OF COMPLETE ELECTRICAL SYSTEMS AS SHOWN ON THE DRAWINGS AND HEREINAFTER SPECIFIED. THESE SPECIFICATIONS SUPPLEMENT THE GENERAL CONDITIONS AND SPECIFICATIONS.

B. EXAMINATION OF SITE: THE CONTRACTOR SHALL THOROUGHLY EXAMINE SITE AND SATISFY HIMSELF AS TO THE CONDITIONS UNDER WHICH THE WORK IS TO BE PERFORMED. THE CONTRACTOR SHALL VERIFY AT THE SITE ALL MEASUREMENTS AFFECTING HIS WORK AND SHALL BE RESPONSIBLE FOR THE CORRECTNESS OF THE SAME. NO EXTRA COMPENSATION WILL BE ALLOWED TO THE CONTRACTOR FOR EXPENSES DUE TO HIS NEGLECT TO EXAMINE OR FAILURE TO DISCOVER CONDITIONS WHICH AFFECT HIS WORK. NO EXTRA COMPENSATION WILL BE ALLOWED ON ACCOUNT OF DIFFERENCES BETWEEN ACTUAL DIMENSIONS AND THOSE INDICATED ON THE DRAWINGS.

C. THE AGREEMENT FORMS, GENERAL CONDITIONS AND SUPPLEMENTARY CONDITIONS OF THE SPECIFICATIONS SHALL APPLY TO THE WORK SPECIFIED IN DIVISION 26.

1.03 DEFINITION

A. "WIRING": WIRE OR CABLE, INSTALLED IN RACEWAY WITH ALL REQUIRED BOXES, FITTINGS, CONNECTORS AND ACCESSORIES, COMPLETELY INSTALLED.

B. "FEEDER": WIRING TO ANY DEVICE OR EQUIPMENT IN WHICH NUMBER SIX AWG COPPER (#6 CU) OR LARGER CONDUCTORS ARE USED.

C. "POWER WIRING": WIRING TO ANY DEVICE OR EQUIPMENT SERVED BY A MULTI–POLE BREAKER.

1.04 QUALITY ASSURANCE

A. CODES: COMPLY WITH THE LATEST EDITION OF THE NATIONAL ELECTRICAL CODE (NEC) AND ANY OTHER AUTHORITIES HAVING JURISDICTION OVER THE WORK.

B. PERMITS AND INSPECTIONS: PROVIDE ALL PERMITS REQUIRED AND OBTAIN FINAL INSPECTION AND APPROVAL FROM THE INSPECTION DEPARTMENT HAVING JURISDICTION.

C. WHERE DIFFERENT SECTIONS OF ANY APPLICABLE CODES SPECIFY DIFFERENT MATERIALS, METHODS OF CONSTRUCTION, OR OTHER REQUIREMENTS, THE MOST RESTRICTIVE SHALL GOVERN.

D. STANDARDS FOR MATERIAL AND WORKMANSHIP: USE MATERIALS THAT ARE NEW AND LISTED AND LABELED BY UNDERWRITERS LABORATORIES (UL) AS CONFORMING TO ITS STANDARDS, WHERE SUCH A STANDARD HAS BEEN ESTABLISHED FOR THE PARTICULAR TYPE OF MATERIAL IN QUESTION. EXECUTE WORK IN A WORKMAN LIKE MANNER, TO PRESENT A NEAT AND MECHANICAL APPEARANCE WHEN COMPLETED.

1.05 SUBSTITUTION OF MATERIALS

A. NO SUBSTITUTION OF MATERIAL IS ALLOWED WITHOUT WRITTEN PRIOR AUTHORIZATION FROM THE ENGINEER AND OWNER. DETERMINATION OF WHAT IS CONSIDERED EQUAL IS AT THE SOLE DISCRETION OF THE ENGINEER AND OWNER.

B. INCLUDE SUFFICIENT DESCRIPTIVE INFORMATION, INCLUDING MANUFACTURER'S PUBLISHED DATA TO ESTABLISH CONTRACT COMPLIANCE. SUBMIT SAMPLES IF REQUESTED BY ARCHITECT/ENGINEER.

1.06 DRAWINGS AND SPECIFICATIONS

A. THE WIRING LAYOUTS ARE SCHEMATIC AND DO NOT NECESSARILY SHOW THE EXACT LOCATION OF RACEWAYS, OUTLETS, ETC. REFER TO THE ARCHITECTURAL DRAWINGS FOR ACTUAL DIMENSIONS. FIT WORK TO CONFORM TO THE DETAILS OF BUILDING CONSTRUCTION. COORDINATE ALL WORK TO ASSURE PROPER CLEARANCE.

1.07 AS–BUILT DRAWINGS

A. AS WORK PROGRESSES, RECORD ON ONE (1) SET OF ELECTRICAL PRINTS ALL CHANGES AND DEVIATIONS FROM THE CONTRACT DOCUMENTS IN SIZE, LOCATIONS AND TYPES OF ALL MATERIALS AND EQUIPMENT. RECORD FINAL LOCATION OF OUTLETS, SWITCHES, STARTERS, UNDERGROUND AND EXPOSED CONDUITS, ETC. TO INDICATE THE FINAL INSTALLATION. MAKE SUFFICIENT MEASUREMENTS TO LOCATE ALL EQUIPMENT AND CONDUITS. PROVIDE AS–BUILT DRAWINGS.

B. THE CONTRACTOR SHALL PREPARE A TYPED PANEL DIRECTORY FOR EACH PANEL UTILIZED FOR THIS PROJECT. THIS DIRECTORY SHALL IDENTIFY THE CIRCUIT NUMBER, DEVICES SERVED, AND LOCATION OF DEVICES BY ROOM NUMBER. HE SHALL FILE THEM WITH THE BUILDING MANAGER WHEN THE WORK IS COMPLETE.

1.08 MAINTENANCE DATA

A. FURNISH AND DELIVER TO THE ARCHITECT/ENGINEER TWO (2) COMPLETE COPIES OF ALL DATA PREPARED BY MANUFACTURERS, DETAILING OPERATION AND MAINTENANCE INSTRUCTION FOR ALL EQUIPMENT.

1.09 PENETRATIONS, CUTTING, AND PATCHING

A. PERFORM CUTTING AND PATCHING IN ACCORDANCE WITH THE GENERAL AND SUPPLEMENTARY CONDITIONS OF THE CONTRACT.

B. PROVIDE ALL SLEEVES REQUIRED FOR PROPER INSTALLATION OF WORK INCLUDED IN THIS SECTION.

C. MAKE ALL PENETRATIONS THROUGH WALLS AT 90 DEGREE ANGLES. SEAL ALL PENETRATIONS AT FIRE AND SMOKE PARTITIONS WITH FIRE SAFING MATERIAL. SEAL ALL PENETRATIONS AT SOUND WALLS WITH SOUNDPROOFING MATERIAL.

1.10 SUBMITTALS

A. SHOP DRAWINGS AND MATERIAL BROCHURES: FURNISH AN ELECTRONIC SET OF SHOP DRAWINGS AND PRODUCT DATA IN PDF FORMAT TO THE ARCHITECT/ENGINEER ON THE FOLLOWING MATERIALS:

1. LIGHTING FIXTURES
2. DISCONNECT SWITCHES
3. TRANSFORMERS
4. RACEWAYS
5. CONDUCTORS
6. MOTOR CONTROLLERS
7. SWITCHGEAR, PANELBOARDS
8. CONTROL PANELS
9. INSTRUMENTATION

1.11 COOPERATION

A. THE CONTRACTOR SHALL SCHEDULE HIS WORK, AND IN EVERY WAY POSSIBLE, COOPERATE WITH ALL OTHER TRADES IN THE JOB TO AVOID DELAYS, INTERFERENCES AND UNNECESSARY WORK. HE SHALL COOPERATE WITH THEM IN PROVIDING FOR THE INSTALLATION OF THIS WORK AND COORDINATE WITH WORK OF OTHER TRADES TO ASSURE PROPER CLEARANCE OF PIPING, DUCTWORK, CONDUIT, ETC. WHEN SUCH IS REQUIRED.

1.12 WIRING WORKMANSHIP

A. RUN WIRING IN ALL BRANCH CIRCUIT PANELBOARDS AND TERMINAL CABINETS PARALLEL OR AT RIGHT ANGLES TO THE SIDES OR TOP OF THE EQUIPMENT HOUSING.

B. GROUP AND HARNESS CONDUCTORS TOGETHER USING LOCKING TYPE CABLE TIES. CABLE TIES: AS MANUFACTURED BY THE PANDUIT CORPORATION OR THOMAS AND BETTS.

1.13 STORAGE MATERIALS

A. KEEP THE BUILDING AND PREMISES CLEAN AND CLEAR OF SCRAP MATERIALS AT ALL TIMES. STORE MATERIALS AND EQUIPMENT IN DESIGNATED STORAGE AREAS.

1.14 ORDERING OF MATERIALS

A. ORDER MATERIALS AND EQUIPMENT SO AS NOT TO JEOPARDIZE PROGRESS OF CONSTRUCTION OR COMPLETION DATE.

1.15 SAFETY PRECAUTIONS AND PROGRAMS

A. IT SHALL BE THE DUTY AND RESPONSIBILITY OF THE CONTRACTOR AND ALL OF ITS SUBCONTRACTORS TO BE FAMILIAR AND COMPLY WITH ALL REQUIREMENTS OF PUBLIC LAW 91–96, 29 U.S.C. SECS. 651 ET. SEQ., THE OCCUPATIONAL SAFETY AND HEALTH ACT OF 1970 (OSHA), AND ALL AMENDMENTS THERETO AND TO ENFORCE AND COMPLY WITH ALL OF THE PROVISIONS OF THIS ACT. IN ADDITION, ON PROJECTS IN WHICH TRENCH EXCAVATION WILL EXCEED A DEPTH OF FIVE FEET (5'), THE CONTRACTOR AND ALL OF ITS SUBCONTRACTORS SHALL COMPLY WITH ALL REQUIREMENTS OF 29 C.F.R., SECS. 1926.652 AND 1926.653, OSHA SAFETY AND HEALTH STANDARDS.

1.16 WARRANTY

A. GUARANTEE ALL WORK UNDER THIS SECTION FOR WORKMANSHIP, LABOR AND MATERIALS FOR A PERIOD OF ONE (1) YEAR FROM THE DATE OF ACCEPTANCE BY THE OWNER OR HIS AUTHORIZED REPRESENTATIVE.

PART 2 – PRODUCTS AND EXECUTION

2.01 CONDUIT

A. EXCEPT AS OTHERWISE NOTED, SPECIFIED OR REQUIRED, INSTALL ALL WIRES USED IN THIS PROJECT IN ELECTRICAL METALLIC TUBING AS HEREINAFTER SPECIFIED. (METAL CLAD CABLE MAY BE INSTALLED IN LIEU OF CONDUIT AS STATED BELOW)

B. INSTALL CONDUITS CONTINUOUS FROM OUTLET TO OUTLET, FROM OUTLET TO CABINET, JUNCTION BOX AND PULL BOX. SECURE CONDUITS TO ALL BOXES, ETC., IN SUCH A MANNER THAT EACH SYSTEM WILL BE ELECTRICALLY CONTINUOUS FROM SERVICE TO ALL OUTLETS. TERMINATE ALL CONDUIT RUNS FROM CABINETS AND JUNCTION BOXES IN APPROVED OUTLET BOXES. INSTALL CONDUITS AS HIGH AS POSSIBLE UP AGAINST STRUCTURE ABOVE. AVOID ROUTING CONFLICTS WITH HVAC EQUIPMENT/DUCTWORK, SANITARY WASTE, VENT PIPING, AND DOMESTIC WATER PIPING.

C. INSTALL A NYLON PULL WIRE (200 LB. TEST) AND TIE ENDS IN ALL CONDUIT LINES LEFT EMPTY FOR FUTURE USE.

D. TRAPPED OR INACCESSIBLE JUNCTION BOXES, OUTLETS, ETC. ARE NOT ALLOWED.

E. GENERALLY, CONCEAL ALL CONDUITS UNLESS OTHERWISE DIRECTED OR INDICATED ON THE DRAWINGS.

F. NO BENDS PERMITTED WITH A RADIUS LESS THAN SIX (6) TIMES THE DIAMETER OF THE CONDUIT.

G. PROVIDE JUNCTION BOXES OR PULL BOXES TO AVOID EXCESSIVE RUNS OR TOO MANY BENDS BETWEEN OUTLETS.

H. INCREASE CONDUIT SIZES SHOWN ON THE PLANS AS REQUIRED FACILITATING PULLING OF CONDUCTORS.

I. RUN ALL CONDUITS PARALLEL TO OR AT RIGHT ANGLES TO THE BUILDING WALLS AND SUPPORT FROM WALLS OR CEILINGS AT INTERVALS REQUIRED BY CODE WITH APPROVED CLAMPS OR HANGERS.

J. INSTALL APPROVED APPLETON, CROUSE HINDS, OR O.Z. MANUFACTURING CO. EXPANSION FITTINGS IN ALL EMT RUNS WHICH PASS THROUGH EXPANSION JOINTS IN THE BUILDING. OTHER METHODS TO PROVIDE FOR THIS EXPANSION MUST BE APPROVED BY THE ARCHITECT/ENGINEER.

K. ALL BELOW GRADE TO BE SCHEDULE 40 PVC.

2.02 WIRING

A. INSTALL WIRING AS FOLLOWS:

1. FEEDERS AND POWER WIRING: CONDUCTORS IN RIGID GALVANIZED STEEL CONDUIT IMC, OR EMT WHEN INSTALLED IN DRY LOCATION ABOVE GRADE. SCHEDULE 40 PVC WHEN INSTALLED BELOW GRADE.

2. BRANCH CIRCUITS: INSTALL CONDUCTORS IN EMT.

3. INSTALL ALL WIRING IN EMT. USE ONLY UL LISTED LUBRICANTS IN PULLING THE CONDUCTORS.

4. INSTALL CONDUCTORS CONTINUOUS FROM OUTLET TO OUTLET AND FROM OUTLET TO JUNCTION BOX OR PULL BOX. INSTALL SPLICES AND JOINTS CAREFULLY AND SECURELY TO BE MECHANICALLY AND ELECTRICALLY SOLID WITH PRESSURE TYPE CONNECTORS. USE 3M "SCOTCHLOCK" OR IDEAL "WING NUT" OR EQUAL TWIST–ON CONNECTORS FOR #10 AND SMALLER CONDUCTORS.

5. CONNECT CONDUCTORS FOR LIGHTING AND RECEPTACLE CIRCUITS TO THE PANEL AS DETAILED WITH COLOR CODED JACKET. COLOR CODE ALL WIRES WITH THE TYPE, SIZE, MAKE AND VOLTAGE MARKED ON IT. COLOR CODE WIRING WITH THE SAME COLOR BEING USED WITH ITS RESPECTIVE PHASE AS FOLLOWS, UNLESS OTHERWISE REQUIRED BY THE LOCAL AUTHORITY HAVING JURISDICTION.

	120/240 VOLT DELTA	120/208 VOLT WYE	480/277 VOLT WYE
PHASE A	RED	RED	BROWN
PHASE B	ORANGE	BLACK	YELLOW
PHASE C	BLACK	BLUE	PURPLE
NEUTRAL	WHITE	WHITE	GRAY
GROUND	GREEN	GREEN	GREEN

6. BRANCH CIRCUIT CONDUCTORS SHALL NOT BE SMALLER THAN NO. 12 AWG. INCREASE THE WIRE SIZES UP ONE (1) SIZE WHEREVER THE RUN DISTANCE EXCEEDS 200 FEET.

7. ALL WIRING AND CABLE INCLUDING FIBER OPTIC, ELECTRICAL, DATA, TELECOMMUNICATIONS, TEMPERATURE CONTROLS, SECURITY, FIRE PROTECTION, ETC. SHALL BE RUN IN ELEC. METALLIC CONDUIT (EMT). WIRING OR CABLES OF ANY TYPE SHALL NOT BE LAID, RUN, DRAPED, OR STRUNG ACROSS CEILING GRID, CEILING TILES, SUSPENSION WIRES, AND SHALL NOT BE INSTALLED WITHIN 12" ABOVE THE SUSPENDED CEILING SYSTEM OR SUPPORT STRUCTURE.

8. ARMORED CABLE/METAL–CLAD CABLE

A. ARMORED CABLE (AC CABLE) AND/OR METAL–CLAD CABLE (MC CABLE) MAY BE INSTALLED IN LIEU OF CONDUIT AND WIRE AS ALLOWED BY THE CODE AND APPROVED BUILDING OWNER STANDARDS FOR:

1. BRANCH CIRCUIT WIRING (#10 AND SMALLER).
2. INTERCONNECTION OF LIGHTING FIXTURE.
3. FLEXIBLE CONNECTION TO VIBRATING EQUIPMENT (SMALL EXHAUST FANS, ETC.)

B. IT SHALL BE INSTALLED IN A NEAT AND WORKMANLIKE MANNER AND ADEQUATELY SUPPORTED PER THE CODE AND AHJ. ALL HOME RUNS FROM PANELS SHALL BE CONDUIT AND WIRE.

2.03 CONDUCTORS

A. COPPER OF 98% CONDUCTIVITY.

B. NO. 10 AND SMALLER: SOLID, TYPE THWN/THHN, EXCEPT AS OTHERWISE NOTED.

C. NO. 8 AND LARGER: STRANDED, TYPE THWN/THHN, EXCEPT AS OTHERWISE NOTED..

D. MINIMUM SIZE CONDUCTORS USED SHALL BE NO. 12 AWG FOR ALL APPLICATIONS EXCEPT WHERE SPECIFICALLY NOTED OTHERWISE (A.C. CONTROLS, ETC.).

E. USE WIRE AND CABLE FROM ONE (1) MANUFACTURER. DELIVER IN THE ORIGINAL WRAPPING BEARING THE UNDERWRITERS LABORATORIES (UL) LABEL.

2.04 OUTLETS

A. USE GALVANIZED STEEL OR CAST TYPE BOXES AT ALL OUTLETS FOR LIGHTING FIXTURES, WALL SWITCHES, WALL RECEPTACLES, ETC.

B. SECURELY ATTACH OUTLET BOXES FOR FIXTURES AND DEVICES TO THE BUILDING CONSTRUCTION WITH EXPANSION BOLTS.

C. FLUSH MOUNT ALL OUTLET BOXES, REGARDLESS OF WALL OR CEILING CONSTRUCTION, UNLESS THEY ARE SPECIFICALLY SHOWN AS BEING USED WITH EXPOSED CONDUIT. IF SURFACE MOUNTED, USE CAST TYPE AS SPECIFIED ABOVE. UTILITY BOXES ARE NOT ALLOWED.

2.05 INSTALLATION

A. INSTALL RACEWAYS EXPOSED. SUPPORT EXPOSED RACEWAYS AT INTERVALS NOT EXCEEDING TEN FEET (10') WITH MACHINE SCREWS FOR METAL CONSTRUCTION AND EXPANSION BOLTS FOR CONCRETE CONSTRUCTION.

B. INSTALL THE EDGES OF ALL OUTLET BOXES FLUSH WITH THE SURFACE IN WHICH THEY ARE RECESSED. SCREW ATTACH INTERNAL DEVICES BEFORE ATTACHING COVERPLATE. DO NOT USE COVERPLATES AS A MEANS OF TIGHTENING THE DEVICES IN PLACE.

2.06 DISCONNECT AND FEEDER SWITCHES

A. FEEDER SWITCHES AND DISCONNECT SWITCHES: HEAVY DUTY, EXCEPT AS OTHERWISE NOTED. IN DAMP LOCATIONS OR EXPOSED TO THE WEATHER, USE NEMA 3R, RAINTIGHT.

B. DISCONNECT SWITCHES: FACTORY INSTALLED PROVISION FOR PADLOCKING IN EITHER THE "ON" OR "OFF" POSITION.

2.07 FUSES

A. FUSES: BUSSMANN OR APPROVED EQUAL.

2.08 LABELING

A. LABEL ALL PANELS, CONTROL POINTS, SWITCHES, AND MOTORS, AS DIRECTED. IDENTIFY PANELS BY PANEL NUMBER. LABEL SWITCHES, INDICATING THE EQUIPMENT WHICH THEY CONTROL. ALL LABELS SHALL BE ENGRAVED. PANEL DIRECTORIES TO BE TYPED. COORDINATE ALL EQUIPMENT NUMBERING WITH MECHANICAL CONTRACTOR.

B. INSTALL ARC FLASH HAZARD LABELS ON ALL NEW SWITCHBOARDS, PANELBOARDS, INDUSTRIAL CONTROL PANELS, METER SOCKET ENCLOSURES AND MOTOR CONTROL CENTERS PER NEC 110.16. PANDUIT #PPS0305W2100 OR EQUAL.

2.09 GROUNDING

A. PROVIDE GROUNDING FOR ELECTRICAL SYSTEM IN ACCORDANCE WITH THE REQUIREMENTS OF THE NATIONAL ELECTRICAL CODE (NEC)

2.10 COVERPLATES

A. WHERE WIRING DEVICES ARE FLUSH MOUNTED, INSTALL COVERPLATES TO MATCH BUILDING STANDARDS OR AS SELECTED BY ARCHITECT. 302 S/S LEVITON 84XXX–40 SERIES, NYLON 807XX–(X), OR APPROVED EQUAL.

B. WHERE WIRING DEVICES ARE SURFACE MOUNTED, INSTALL FORMED STEEL COVERPLATES WITH CADMIUM PLATING.

C. WHERE WEATHERPROOF/WEATHER–RESISTANT COVERPLATES ARE REQUIRED, MEET UL "WET LOCATION COVER CLOSED" REQUIREMENTS. USE COVERPLATES THAT ARE HINGED AND GASKETED WITH SPRING LOADED CLOSER, LEVITON 4970/WHILE–IN–USE LEVITON M5979–(X), OR APPROVED EQUAL.

D. INSTALL FINISHED COVERPLATES ON ALL JUNCTION BOXES, OUTLET BOXES, SECTIONAL SWITCH BOXES, UTILITY BOXES, ETC.

E. WHERE MORE THAN ONE (1) DEVICE IS INDICATED AT A LOCATION, MOUNT DEVICES IN COMBINED SECTION GANG BOXES, COVERED BY A COMMON PLATE.

2.11 RECEPTACLES

A. DUPLEX RECEPTACLES: 20 AMPERE, 125 VOLT, SELF OR AUTOMATIC GROUNDING, COLOR TO MATCH BUILDING STANDARD OR AS SELECTED BY ARCHITECT, LEVITON 5362–(X), LEVITON GFCI 7899–(X), OR APPROVED EQUAL.

B. SPECIAL MOUNTING HEIGHTS ARE NOTED ON THE ARCHITECTURAL DRAWINGS. UNLESS OTHERWISE INDICATED ON THE ELECTRICAL DRAWINGS, MOUNT DEVICES AT THE FOLLOWING HEIGHTS ABOVE FINISHED FLOOR:

1.	DUPLEX RECEPTACLE	18"
2.	WALL SWITCHES	48"
3.	VOICE & VOICE/DATA OUTLETS	18"
4.	WALL & PAY TELEPHONE OUTLETS	48"

2.12 SWITCHES

A. PROVIDE HEAVY–DUTY, AC, QUIET SWITCHES. THE SWITCHES SHALL BE LEVITON 122X–2(X), 122X–2(X)L, OR APPROVED EQUAL, 120–277 VOLT, 20 AMPERES, SPECIFICATION GRADE. SWITCHES SHALL BE SINGLE POLE, DOUBLE POLE, THREE WAY, FOUR WAY, OR KEY OPERATED AS SCHEDULED ON THE DRAWINGS AND SHALL BE THE SELF GROUNDING TYPE. COLOR SHALL MATCH BUILDING STANDARDS OR BE SELECTED BY ARCHITECT.

B. PROVIDE OCCUPANT–SENSING DEVICES TO CONTROL SWITCHING PER IEC 505.2.1.1 EXCEPTION 2 AS SCHEDULED ON THE DRAWINGS. USE LEVITON MULTI–TECHNOLOGY WALL SWITCH OCCUPANCY SENSOR #OSSMD–MD–(X), OR APPROVED EQUAL. COLOR SHALL MATCH BUILDING STANDARDS OR BE SELECTED BY ARCHITECT.

2.13 LIGHTING FIXTURES

A. PROVIDE ALL LIGHTING FIXTURES, AS SCHEDULED ON DRAWINGS, COMPLETE WITH LAMPS AND HARDWARE. INSTALL COMPLETELY WIRED, CONNECTED AND IN OPERATING ORDER.

B. CONFIRM ALL CEILING CONDITIONS, CLEARANCES AND OPERATING VOLTAGES BEFORE ORDERING LIGHTING FIXTURES.

C. SUBMIT SHOP DRAWINGS.

2.13.1 LAMPS

A. INSTALL SCHEDULED LAMPS MANUFACTURED BY GENERAL ELECTRIC, PHILLIPS, OR APPROVED EQUAL.

2.13.2 FIXTURES

A. PROVIDE LIGHTING FIXTURES WHICH HAVE BEEN TESTED AND CERTIFIED FOR PROPER OPERATION BY THE FIXTURE'S MANUFACTURER.

B. PROVIDE LIGHTING FIXTURES WITH TRIM COMPATIBLE WITH CEILING OR SURFACE ON OR IN WHICH INSTALLED.

C. EACH LUMINAIRE SHALL HAVE TWO SUPPORT WIRES INSTALLED, ONE ON EACH END, AT DIAGONAL CORNERS. LUMINAIRES IN FIRE RATED CEILINGS SHALL BE SUPPORTED ON ALL FOUR CORNERS.

D. SUPPORT AND SECURELY ATTACH WITH GALVANIZED FASTENERS IN A LEVEL POSITION.

E. INSTALL ACCORDING TO MANUFACTURER'S RECOMMENDATIONS.

F. FIRE RATED ASSEMBLIES, COMPLY WITH DETAILS OF LISTED ASSEMBLY.

2.14 TEMPORARY POWER

A. PROVIDE TEMPORARY POWER (SMALL TOOL) AND LIGHTING PER OSHA REQUIREMENTS.

2.15 FIRE ALARM AND SPECIAL SYSTEMS

A. FIRE ALARM CONTRACTOR SHALL PROVIDE COMPLETE SHOP DRAWINGS, ROUTING, BATTERY CALCULATIONS AND ALL OTHER SUBMITTALS TO MEET LOCAL AUTHORITY HAVING JURISDICTION (AHJ) REQUIREMENTS. PROVIDE A COMPLETE CODE COMPLIANT WORKING FIRE ALARM SYSTEM.

2.16 LIGHTING CONTROLS

A. PROVIDE 0–10V LIGHTING CONTROL DEVICES.

B. DEVICES SHALL BE COMPATIBLE WITH SUBMITTED LED DRIVERS.

C. OCCUPANCY SENSORS, PROVIDE INTEGRAL OCCUPANCY SENSORS WITH DUAL TECHNOLOGY WHERE INDICATED ON PLANS.

D. ACCEPTABLE MANUFACTURERS

1. nLIGHT
2. CRESTRON
3. WATT STOPPER
4. LUTRON

E. WALL–BOX MOUNTED OCCUPANCY SENSORS SHALL PROVIDE INTERNAL CONTACTS FOR AUTOMATIC SWITCHING OF CONNECTED LUMINAIRES AT LINE VOLTAGE, EXCEPT WHERE INDICATED OTHERWISE ON THE PLANS AND ELECTRICAL SCHEMATICS.

F. CEILING–MOUNTED OCCUPANCY SENSORS AND SELECTED WALL–MOUNTED SENSORS SHALL CONTROL LUMINAIRES THROUGH CONTROL UNITS (I.E., SWITCHING POWER SUPPLIES, SWITCH PACKS, POWER PACKS).

G. INSTALL OCCUPANCY SENSORS IN THE CORRECT LOCATION AND AIM AS REQUIRED FOR COMPLETE AND PROPER VOLUMETRIC COVERAGE WITHIN THE RANGE OF COVERAGE OF CONTROLLED AREAS PER THE MANUFACTURER'S RECOMMENDATIONS. ROOMS SHALL HAVE 100 PERCENT COVERAGE OF EACH CONTROLLED AREA TO ACCOMMODATE THE OCCUPANCY HABITS OF SINGLE OR MULTIPLE OCCUPANTS WITHIN THE ROOMS. THE LOCATIONS AND QUANTITIES OF SENSORS SHOWN ON THE DRAWINGS ARE DIAGRAMMATIC AND INDICATE ONLY THE ROOMS WHICH ARE TO BE PROVIDED WITH SENSORS. THE CONTRACTOR SHALL PROVIDE ADDITIONAL SENSORS AS REQUIRED TO PROPERLY AND COMPLETELY COVER THE RESPECTIVE ROOM.

HOMESTEAD PHASE 3
STREET LIGHTING

LEANDER TEXAS 78641

COUNTY ROAD 279

2490120
STATE OF TEXAS
STEVE L. KANETZKY
84696
LICENSED
PROFESSIONAL ENGINEER
2/25/20

S. Kanetzky Engineering, LLC.
5920 W. William Cannon
Bldg. 7, Suite 200
Austin, Texas 78749
(512) 326-3380
www.skaneng.com
TBPE Firm No. F-2356

SKE PROJECT # 2490120

Filename:
Scale: AS NOTED
Drawn By: GB
Checked By: SK
Date: 02/14/2020

DWG Number:

Title:
ELECTRICAL SPECIFICATIONS

Sheet: 45 OF 61
E1.1

PLOT DATE: 02/25/20 12:32:34PM, LAYOUT TAB: E1.1, USER: gbruboker, DWG NAME: K:\Projects\2020\2490120-CBD-Homestead Phase 3 Street Lighting\01 Design Phase_CAD\2490120-E11.dwg,

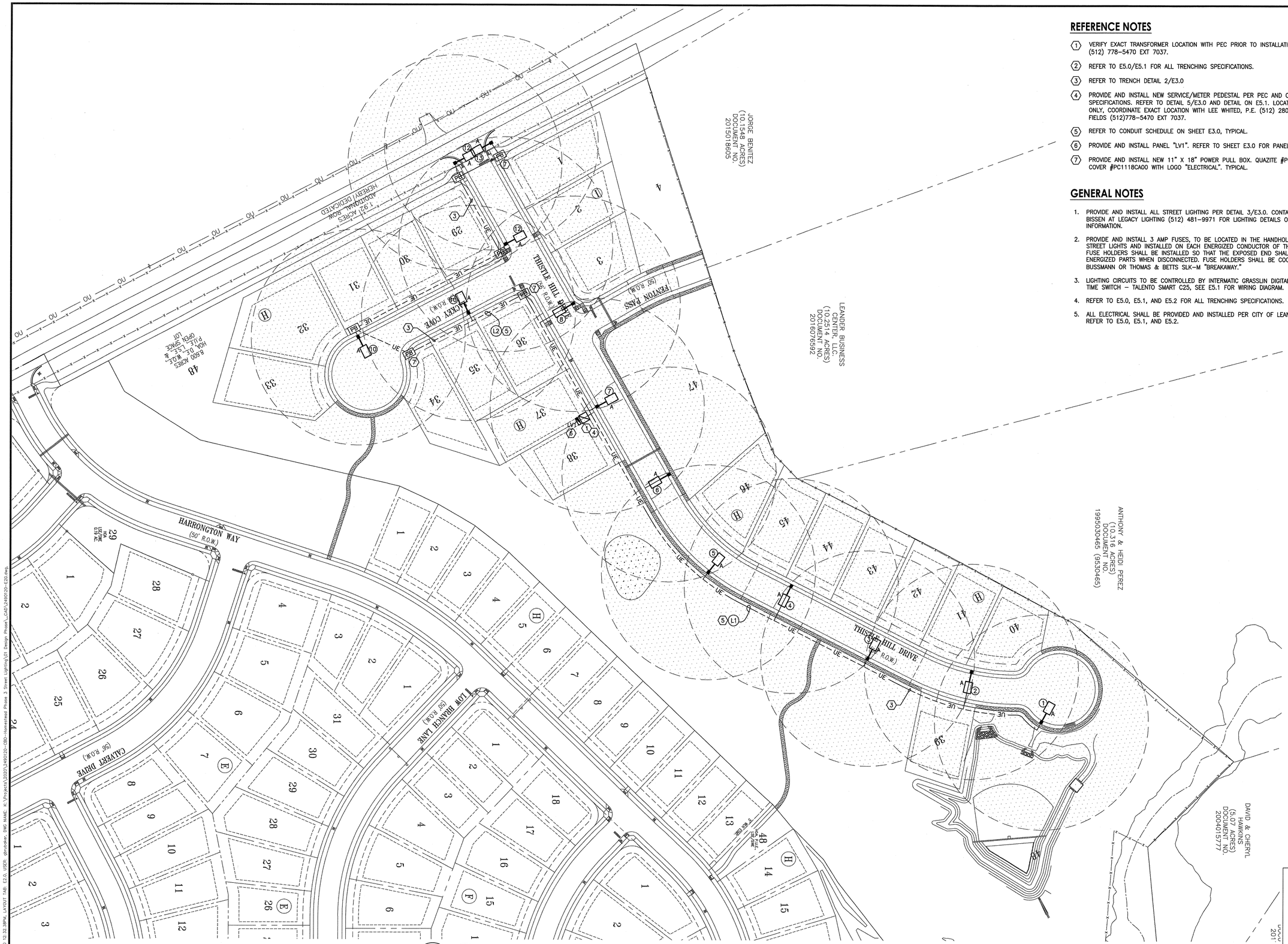

1 E2.0 **ELECTRICAL SITE LIGHTING PLAN** ⟨2⟩
SCALE: 1" = 60'-0"

REFERENCE NOTES

1. VERIFY EXACT TRANSFORMER LOCATION WITH PEC PRIOR TO INSTALLATION. DIRK FIELDS (512) 778-5470 EXT 7037.
2. REFER TO E5.0/E5.1 FOR ALL TRENCHING SPECIFICATIONS.
3. REFER TO TRENCH DETAIL 2/E3.0
4. PROVIDE AND INSTALL NEW SERVICE/METER PEDESTAL PER PEC AND CITY OF LEANDER SPECIFICATIONS. REFER TO DETAIL 5/E3.0 AND DETAIL ON E5.1. LOCATION FOR REFERENCE ONLY, COORDINATE EXACT LOCATION WITH LEE WHITED, P.E. (512) 280-5160 & DIRK FIELDS (512)778-5470 EXT 7037.
5. REFER TO CONDUIT SCHEDULE ON SHEET E3.0, TYPICAL.
6. PROVIDE AND INSTALL PANEL "LV1". REFER TO SHEET E3.0 FOR PANEL SCHEDULE.
7. PROVIDE AND INSTALL NEW 11" X 18" POWER PULL BOX. QUAZITE #PC1118BB18 AND COVER #PC1118CA00 WITH LOGO "ELECTRICAL". TYPICAL.

GENERAL NOTES

1. PROVIDE AND INSTALL ALL STREET LIGHTING PER DETAIL 3/E3.0. CONTACT SHELBY BISSEN AT LEGACY LIGHTING (512) 481-9971 FOR LIGHTING DETAILS OR FIXTURE INFORMATION.
2. PROVIDE AND INSTALL 3 AMP FUSES, TO BE LOCATED IN THE HANDHOLES OF ALL STREET LIGHTS AND INSTALLED ON EACH ENERGIZED CONDUCTOR OF THE CIRCUIT. FUSE HOLDERS SHALL BE INSTALLED SO THAT THE EXPOSED END SHALL BE FREE OF ENERGIZED PARTS WHEN DISCONNECTED. FUSE HOLDERS SHALL BE COOPER BUSSMANN OR THOMAS & BETTS SLK-M "BREAKAWAY."
3. LIGHTING CIRCUITS TO BE CONTROLLED BY INTERMATIC GRASSLIN DIGITAL DIN-RAIL TIME SWITCH - TALENTO SMART C25, SEE E5.1 FOR WIRING DIAGRAM.
4. REFER TO E5.0, E5.1, AND E5.2 FOR ALL TRENCHING SPECIFICATIONS.
5. ALL ELECTRICAL SHALL BE PROVIDED AND INSTALLED PER CITY OF LEANDER DETAILS. REFER TO E5.0, E5.1, AND E5.2.

HOMESTEAD PHASE 3 STREET LIGHTING

COUNTY ROAD 279 LEANDER TEXAS 78641

2490120 STATE OF TEXAS STEVE L. KANETZKY 84696 LICENSED PROFESSIONAL ENGINEER 2/25/20

SKE
S. Kanetzky Engineering, LLC.
5920 W. William Cannon
Bldg. 7, Suite 200
Austin, Texas 78749
(512) 326-3380
www.skaneng.com
TBPE Firm No. F-2356
SKE PROJECT # 2490120

Filename:
Scale: AS NOTED
Drawn By: GB
Checked By: SK
Date: 02/14/2020
DWG Number:

Title: **ELECTRICAL SITE LIGHTING PLAN**

PLOT DATE: 02/25/20 12:32:38PM, LAYOUT TAB: E2.0, USER: gbooker, DWG NAME: K:\Projects\2020\2490120-CR0-Homestead Phase 3 Street Lighting\01 Design Phase_CAD\2490120-E20.dwg

PANEL LV1 (NEW)

AMPS: 60A MCB
VOLTAGE: 240/120V
LOCATION: PEDESTAL
FED FROM: PEC TRANSFORMER

PHASE: 1
WIRE: 3

MOUNTING: SURFACE
MINIMUM AIC RATING: 10 KA
BUSSING: COPPER
NEMA: 3R

CKT. NO.	SERVICE DESCRIPTION	WIRE	BKR	POLES	KVA	A	B	KVA	POLES	BKR	WIRE	SERVICE DESCRIPTION	CKT. NO.
1	LIGHT POLES 1-6	12	20	2	0.2	0.4		0.2	2	20	12	LIGHT POLES 7-13	2
3	|				0.2		0.4	0.2				|	4
5	TIME CLOCK	12	20	1	0.1	0.1		0.0	1			FUTURE LIGHTING	6
7	FUTURE LIGHTING			1	0.0		0.0	0.0	1			FUTURE LIGHTING	8
9	FUTURE LIGHTING			1	0.0	0.0		0.0	1			FUTURE LIGHTING	10
11	FUTURE LIGHTING			1	0.0		0.0	0.0	1			FUTURE LIGHTING	12
				PHASE LOAD IN KVA:		0.5	0.4						
				PHASE LOAD IN AMPS:		4	3						

NOTE: TYPE AMERITEX WS3R-321408

LIGHTING FIXTURE SCHEDULE

TYPE	MANUFACTURER	CATALOG NO.	LAMP QTY	LAMP TYPE	LAMP WATTS	FIX. WATTS	VOLTS	MOUNTING	REMARKS
A	COOPER LUMARK	NAV-AF-01-E-UNV-T3-10K-AP	1	LED	59	59	240	POLE	STANDARD 4000K CCT AND 70 CRI NOMINAL HAPCO 25' POLE W/ 6' ARM

PHASE 3 CONDUIT SCHEDULE

NO.	CONDUIT	WIRE	GND	LENGTH
L1	2" PVC	2#12 THWN	1#12	977'
L2	2" PVC	2#12 THWN	1#12	934'

* LENGTHS ARE ESTIMATED

Typical All Pads

1) Require 3" conduit (unless otherwise specified by PEC) with bell end fittings to extend 1 ½" to 2" above pad.
2) Pads must extend a minimum of 4" above final grade and 1½" below final grade. All pads must be placed on a slope less than or equal to 3:1. If greater than 3:1 contractor must bring slope to required grade.
3) All disturbed soil underneath pad must be replaced by concrete.
4) All ground rods shall be ¾" X 10' Copper clad with clamp and must extend 3" above top of pad.
5) Wood float finish leaving pad square and level with no dips or crown.

Typical For Single Phase Transformer, Combination, Sectionalizer, and Secondary Pads

6) Concrete to have minimum strength of 3000 PSI.
7) Steel reinforcing shall be 6" X 6" No. 10 wire mesh or ⅜" rebar on 12" center to stop 1" from the sides.

5 TYPICAL NOTES REFERENCES
E3.0 SCALE: NTS

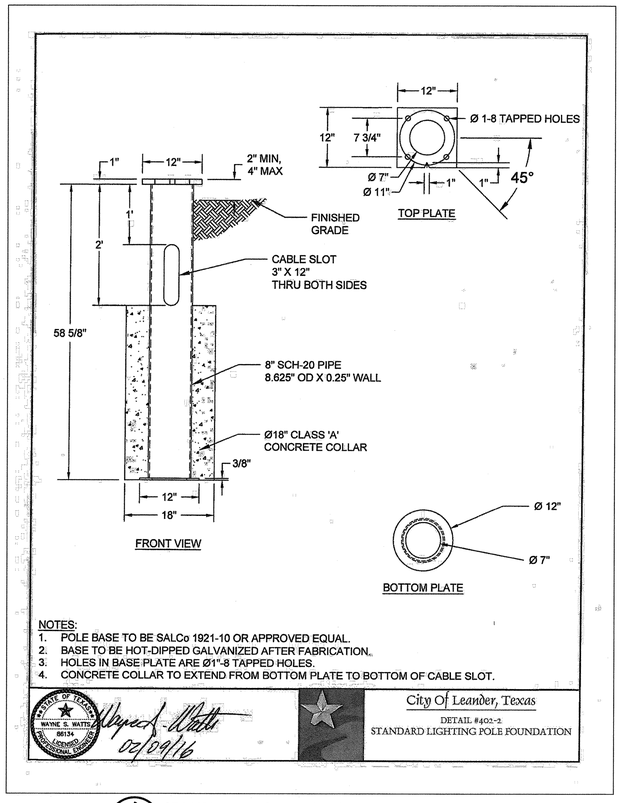

6 STANDARD LIGHTING POLE FOUNDATION
E3.0 SCALE: NTS

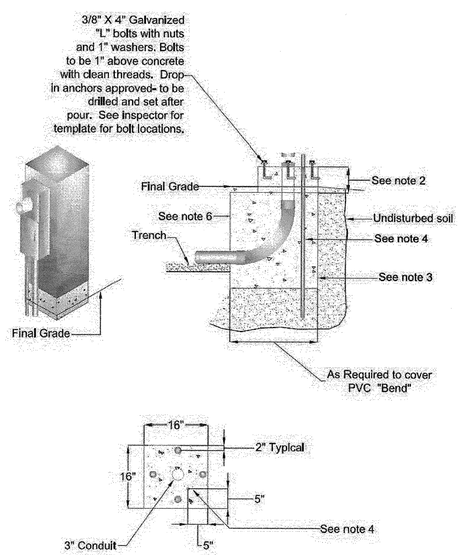

NOTE: METER PEDESTAL TO BE DURHAM #1007739 OR MILBANK #S9650-0

4 PAD FOR SERVICE METER PEDESTAL
E3.0 SCALE: NTS

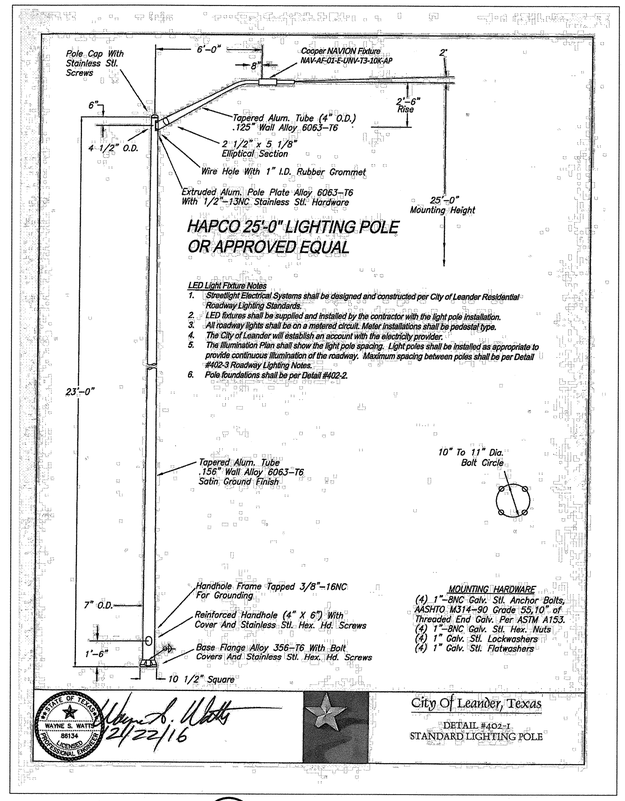

3 TYP. LIGHT POLE DETAIL
E3.0 SCALE: NTS

REFERENCE NOTES

1. PROVIDE AND INSTALL ALL ELECTRICAL PER CITY OF LEANDER SPECIFICATIONS. REFER TO DETAILS ON E5.0, E5.1, AND E5.2.
2. REFER TO PANEL SPECIFICATIONS ON SHEET E5.1.

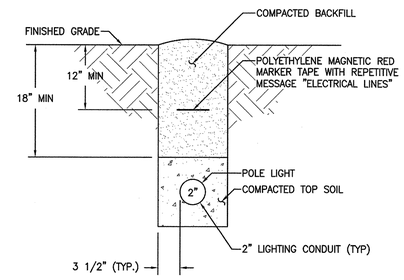

2 DETAIL - TYPICAL TRENCH SECTION
E3.0 SCALE: NTS

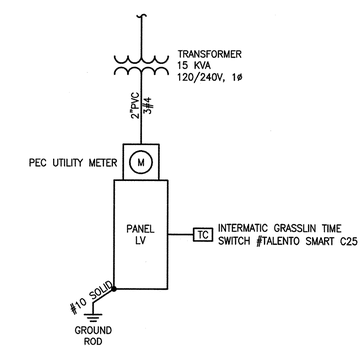

1 TYP. ONE-LINE DIAGRAM ①
E3.0 SCALE: NTS

HOMESTEAD PHASE 3 STREET LIGHTING

COUNTY ROAD 279 LEANDER TEXAS 78641

STATE OF TEXAS
STEVE L. KANETZKY
84696
LICENSED
PROFESSIONAL ENGINEER
2/25/20

SKE
S. Kanetzky Engineering, LLC.
5920 W. William Cannon
Bldg. 7, Suite 200
Austin, Texas 78749
(512) 326-3380
www.skaneng.com
TBPE Firm No. F-2356
SKE PROJECT # 2490120

Filename:
Scale: AS NOTED
Drawn By: GB
Checked By: SK
Date: 02/14/2020
DWG Number:

Title: ELECTRICAL DETAILS

Sheet: 47 OF 61
E3.0

PLOT DATE: 02/25/20 12:32:48PM LAYOUT TAB: E3.0 USER: ghoubler DWG NAME: K:\Projects\2020\2490120-CSD-Homestead Phase 3 Street Lighting\01 Design Phase_CAD\2490120-E30.dwg

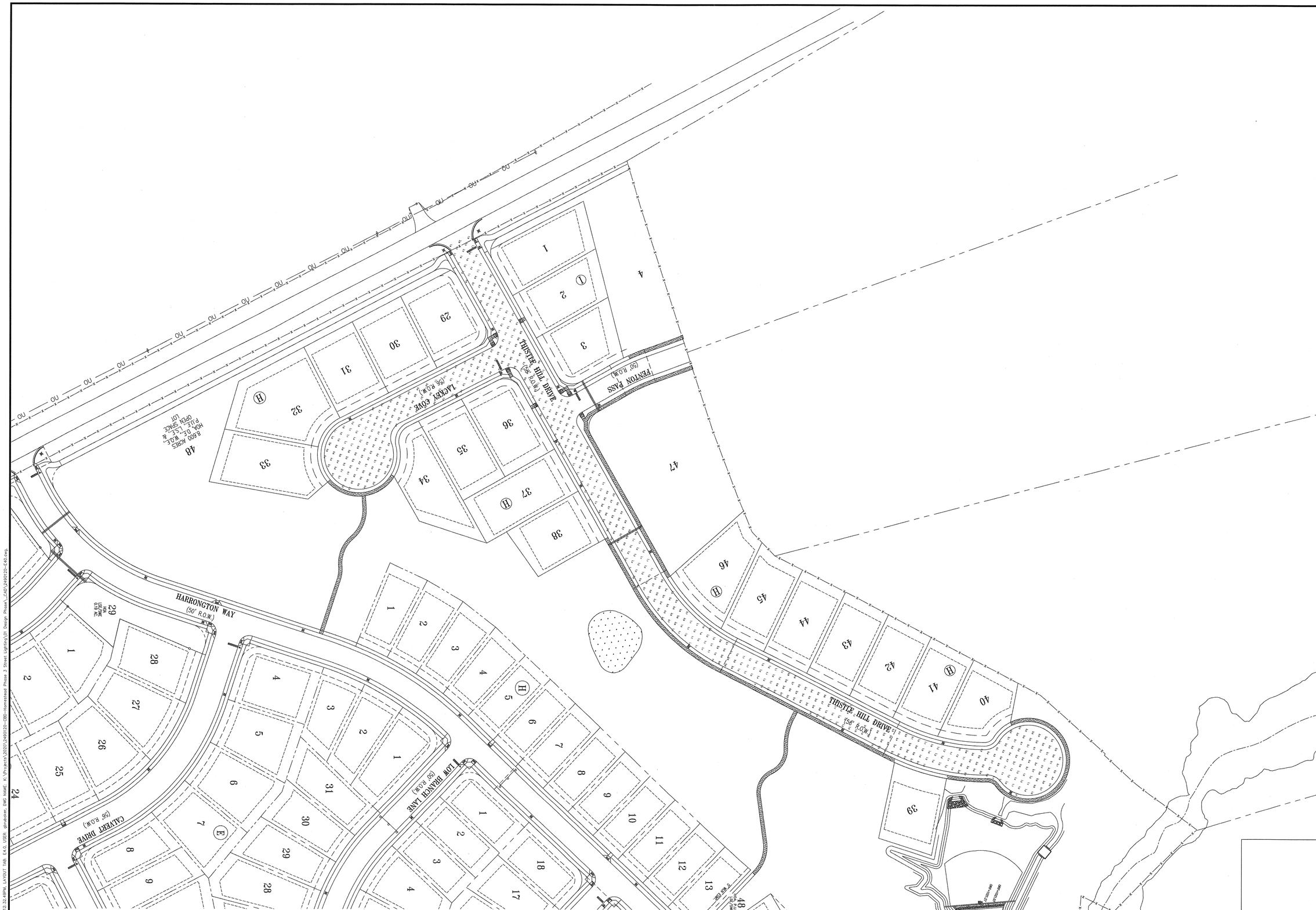

1 E4.0 **SITE LIGHTING PHOTOMETRICS PLAN**
SCALE: 1" = 60'-0"

HOMESTEAD PHASE 3 STREET LIGHTING

COUNTY ROAD 279 LEANDER TEXAS 78641

2/25/20
STATE OF TEXAS
STEVE L. KANETZKY
84696
LICENSED
PROFESSIONAL ENGINEER
2/25/20

SKE
S. Kanetzky Engineering, LLC.
5920 W. William Cannon
Bldg. 7, Suite 200
Austin, Texas 78749
(512) 326-3380
www.skaneng.com
TBPE Firm No. F-2356
SKE PROJECT # 2490120

Filename:
Scale: AS NOTED
Drawn By: GB
Checked By: SK
Date: 02/14/2020
DWG Number:

Title:
SITE LIGHTING PHOTOMETRICS PLAN

Sheet: 48 OF 61
E4.0

PLOT DATE: 02/25/20 12:32:49PM, LAYOUT TAB: E4.0, USER: gbutcher, DWG NAME: K:\Projects\2020\2490120-CSD-Homestead Phase 3 Street Lighting\01 Design Phase_CAD\2490120-E40.dwg

SHEET SPECIFIC NOTES

SHEET #402-4:

1. STREETLIGHTS SHALL BE MOUNTED ON THE PROPERTY LINE BETWEEN PRIVATE LOTS AND WITH A MINIMUM DISTANCE OF 4 FEET FROM ANY PRIVATE DRIVE TO THE EDGE OF THE POLE BASE.
2. ALTERNATE STREETLIGHTS ALONG EACH SIDE OF THE STREET. WIRING FOR THE OPPOSITE SIDE OF THE STREET SHALL CROSS AT EACH STREETLIGHT LOCATION WITH CONDUIT SWEEPS AS SHOWN. PROVIDE PULL BOXES AS REQUIRED TO NOT EXCEED 360' BETWEEN PULL LOCATIONS.
3. STREETLIGHTS SHALL BE SPACED A NOMINAL SPACING OF 150 FEET FROM FOLLOWING LIGHT ON OPPOSITE SIDE OF ROAD AND 300 FEET FROM FOLLOWING LIGHT ON THE SAME SIDE OF ROAD, LOCATED AT THE NEAREST PROPERTY LINES.
4. STREETLIGHTS MOUNTED ON THE OUTSIDE RADIUS OF A CURVED ROAD SHALL BE SUCH THAT THE STREETLIGHTS WILL BE SPACED A NOMINAL SPACING OF 300 FEET APART, AT THE NEAREST PROPERTY LINE.
5. STREETLIGHTS MOUNTED ON THE INSIDE RADIUS OF A CURVED ROAD SHALL BE SPACED SUCH THAT THEY ARE CENTERED BETWEEN THE TWO STREETLIGHTS ON THE OUTSIDE RADIUS, AT THE NEAREST PROPERTY LINE.

SHEET #402-5:

6. EACH LOCAL STREET INTERSECTION MUST HAVE ONE STREETLIGHT MOUNTED TO ONE CORNER. COLLECTOR LEVEL AND HIGHER LEVEL STREETS SHALL HAVE TWO STREET LIGHTS MOUNTED AT OPPOSING CORNERS. ALL SUBSEQUENT STREETLIGHTS TO BE MOUNTED A MINIMUM OF 75 FEET AWAY FROM THE INTERSECTION CORNERS, AT THE NEAREST PROPERTY LINE.
7. PROVIDE CONDUIT SWEEPS AT INTERSECTION CORNERS AS REQUIRED. DO NOT EXCEED A MAXIMUM BEND OF 360' BETWEEN PULL LOCATIONS.
8. CONDUIT CROSSING THE ROAD SHALL TAKE THE SHORTEST PATH AVAILABLE WITHOUT CROSSING A CORNER OF AN INTERSECTION.
9. PROVIDE ONE PULL BOX IN EACH LANDSCAPE STRIP AS SHOWN WHEN CROSSING A ROAD WHERE THERE IS NOT A STREETLIGHT ON EITHER SIDE OF THE CROSSING.

SHEET #402-6:

10. ORIENT PEDESTAL SO THAT LIGHTING CONTROL PANEL FACES ROADWAY.
11. FOLLOW PEDERNALES ELECTRIC COOPERATIVE INC. DRAWING NUMBER 520-010-0911 AND 510-009-0911 FOR PEDESTAL BASE CONSTRUCTION.

SHEET #402-7:

12. EACH CONTROL PEDESTAL HAS AN ASTRONOMICAL TIME SWITCH, INTERMATIC MODEL #TALENTO SMART C25.
13. PER 2014 NATIONAL ELECTRICAL CODE (NEC) ARTICLE 409.108, ENCLOSURE SHALL BE LABELED "SUITABLE FOR USE ONLY AS SERVICE EQUIPMENT". ENCLOSURE SHALL COMPLY WITH ALL OTHER MARKING REQUIREMENTS FOUND IN ARTICLE 409.110.

SHEET SPECIFIC NOTES

SHEET #402-8:

14. CONNECT ONE #6 BARE COPPER CONDUCTOR FROM THE NEUTRAL BUSS TO THE GROUND ROD IN THE PEDESTAL BASE. CONNECTION TO THE GROUND ROD MAY BE EITHER EXOTHERMIC WELD OR MECHANICAL FITTING RATED FOR DIRECT BURIAL.
15. ALL CIRCUIT BREAKERS SHALL HAVE A MINIMUM INTERRUPTING CAPACITY OF 10KAIC.

SHEET #402-9:

16. COORDINATE PLACEMENT OF PEDESTAL WITH ALL OTHER UNDERGROUND UTILITIES. INSTALL PEDESTAL ON A "DRY" LOT LINE UNLESS IN CONFLICT WITH UTILITY EQUIPMENT, WHERE A MINIMUM OF 3-FEET SPACING IS REQUIRED. PEDESTAL SHALL NOT BE INSTALLED NEXT TO A COMBINATION TRANSFORMER PAD.
17. IF A PEDESTAL MUST BE INSTALLED NEXT TO A UTILITY TRANSFORMER, CONTRACTOR SHALL SUBMIT A PLAN TO THE CITY OF LEANDER ENGINEER SHOWING PEDESTAL PLACEMENT, CONDUIT ROUTING, AND ALL OTHER DETAILS NECESSARY TO MINIMIZE CONFLICTS WITH ALL UNDERGROUND UTILITIES. PLAN MUST BE APPROVED BY CITY ENGINEER PRIOR TO THE START OF CONSTRUCTION.
18. ALL PULL BOXES SHALL BE A HUBBELL QUAZITE 11"x18"x18".
19. ANY WIRE JUNCTIONS MADE IN AN IN GROUND PULL BOX SHALL BE MADE WITH THOMAS & BETTS PART NUMBER USK 2/0.

SHEET #402-10:

20. DYU 6 CONNECTORS MAY BE ELIMINATED FOR LAST POLE IN CIRCUIT. IF A CONDUCTOR SIZE CHANGE IS NECESSARY AT THE LAST POLE, USE THOMAS & BETTS PART NUMBER SDK M.
21. ALL UNDERGROUND CONDUITS SHALL BE SCHEDULE 80 PVC.

GENERAL NOTES

1. THESE STANDARDS APPLY TO RESIDENTIAL ROADWAY LIGHTING ONLY. ANY LIGHTING FOR OTHER ROADWAY TYPES SUCH AS ARTERIAL, COLLECTOR, HIGHWAY, ETC. SHALL BE DESIGNED BASED ON A PHOTOMETRIC STUDY IN ACCORDANCE WITH THE IESNA RP-8-14 STANDARD AND APPROPRIATE ROADWAY CLASSIFICATION.
2. ANY DEVIATIONS FROM THE FOLLOWING STANDARDS SHALL REQUIRE CONSTRUCTION DOCUMENTS WITH AN ENGINEERS SEAL, SIGNATURE, AND DATE OF SIGNATURE. SUBMIT TO THE CITY OF LEANDER FOR REVIEW AND APPROVAL PRIOR TO CONSTRUCTION.
3. REFER TO CITY OF LEANDER DETAIL #402-1 AND #402-2 FOR STANDARD POLE BASE, POLE, AND STREETLIGHT SELECTION.
4. THE CONTRACTOR SHALL PROVIDE POWER TO A MINIMUM OF TEN STREETLIGHTS PER CONTROL PEDESTAL WITH THE INTENT TO DEPLOY AS FEW CONTROL PEDESTALS AS POSSIBLE. A SINGLE CONTROL PEDESTAL IS SIZED SUCH THAT IT MAY FEED A MAXIMUM OF 4 CIRCUITS WITH 10 STREETLIGHTS EACH (40 TOTAL).
5. ACCOMMODATION MUST BE MADE FOR PHASED DEVELOPMENTS. ARRANGE STREETLIGHTS AND CIRCUITS SUCH THAT SPARE CIRCUITS IN CONTROL PEDESTAL ARE AVAILABLE TO SERVE FUTURE PHASES WITHOUT THE NEED FOR ADDITIONAL LIGHTING CONTROL PEDESTALS. PROVIDE CONDUIT AND PULL BOXES AT THE BOUNDARY OF EACH ADJOINING PHASE SO THAT SUBSEQUENT PHASES MAY BE EASILY TIED IN TO THE EXISTING LIGHTING CONTROL PEDESTAL.
6. ALL STREETLIGHT BRANCH CIRCUIT WIRING SHALL BE #10AWG UNLESS OTHERWISE NOTED. MAXIMUM BRANCH CIRCUIT DISTANCE IS 2000' OF WIRE, AND THE MAXIMUM NUMBER OF STREETLIGHTS PER BRANCH CIRCUIT IS (10). IF CIRCUITS OR STREETLIGHT QUANTITIES MUST EXCEED THESE NUMBERS, THE SEALING ENGINEER IS RESPONSIBLE FOR PERFORMING VOLTAGE DROP CALCULATIONS DEMONSTRATING THAT THE CALCULATED VOLTAGE DROP IS AT A TOLERABLE LEVEL PER NEC ARTICLE 215.2.

THURL D. SIMS III 120127 LICENSED PROFESSIONAL ENGINEER STATE OF TEXAS
10/31/2018
F-1394

City of Leander, Texas
DETAIL #402-3
RESIDENTIAL ROADWAY LIGHTING NOTES

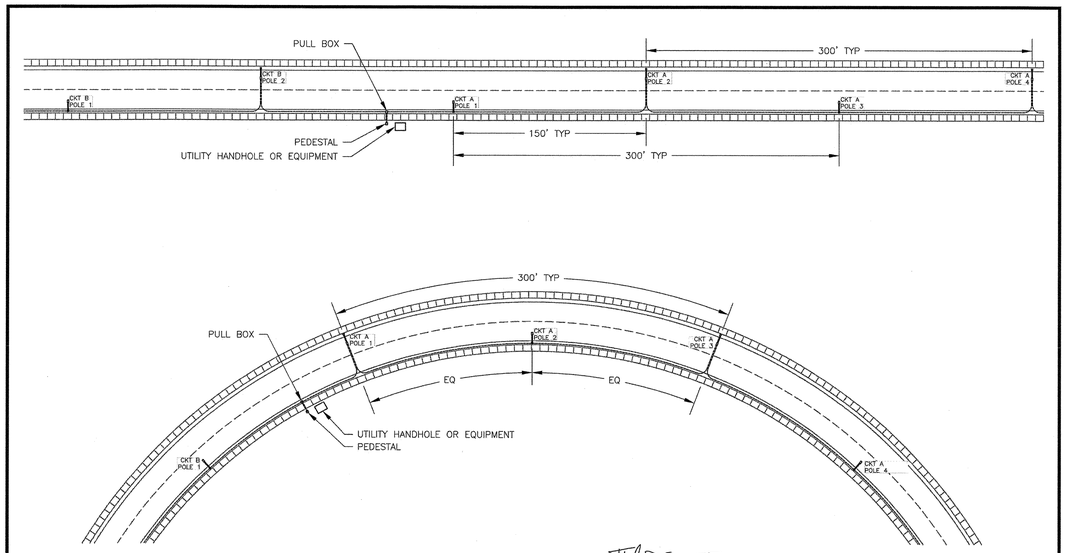

THURL D. SIMS III 120127 LICENSED PROFESSIONAL ENGINEER STATE OF TEXAS
03/28/2018

City of Leander, Texas
DETAIL #402-4
STRAIGHT AND CURVED EXAMPLES

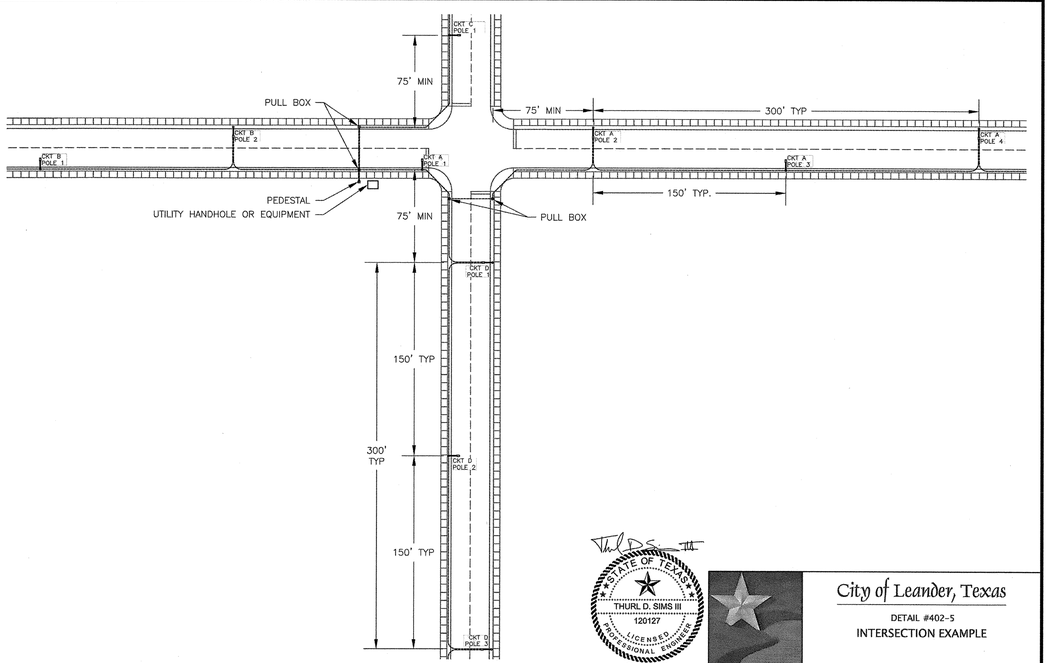

THURL D. SIMS III 120127 LICENSED PROFESSIONAL ENGINEER STATE OF TEXAS
03/28/2018

City of Leander, Texas
DETAIL #402-5
INTERSECTION EXAMPLE

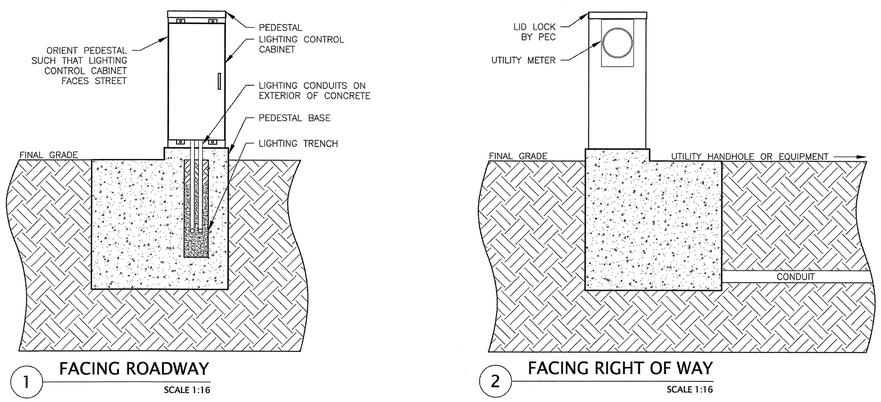

1 FACING ROADWAY
SCALE 1:16

2 FACING RIGHT OF WAY
SCALE 1:16

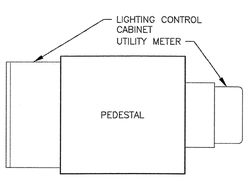

3 EXTERIOR TOP
SCALE 1:8

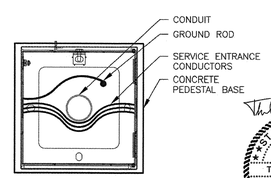

4 INTERIOR BOTTOM
SCALE 1:8

THURL D. SIMS III 120127 LICENSED PROFESSIONAL ENGINEER STATE OF TEXAS
03/28/2018

City of Leander, Texas
DETAIL #402-6
METER AND CONTROL PEDESTAL VIEWS

HOMESTEAD PHASE 3 STREET LIGHTING

COUNTY ROAD 279 LEANDER TEXAS 78641

STEVE L. KANETZKY 84696 LICENSED PROFESSIONAL ENGINEER STATE OF TEXAS
2/25/20

S. Kanetzky Engineering, LLC.
5920 W. William Cannon
Bldg. 7, Suite 200
Austin, Texas 78749
(512) 326-3380
www.skaneng.com
TBPE Firm No. F-2356
SKE PROJECT # 2490120

Filename:
Scale: AS NOTED
Drawn By: GB
Checked By: SK
Date: 02/14/2020

DWG Number:

Title:
RESIDENTIAL ROADWAY LIGHTING STANDARDS

E5.0

PLOT DATE: 02/25/20 12:32:56PM, LAYOUT TAB: E5.0, USER: gbrubaker, DWG NAME: K:\Projects\2020\2490120-CBD-Homestead Phase 3 Street Lighting\01 Design Phase_CAD\2490120-E50.dwg

CONTROL PEDESTAL NOTES

1. EACH LIGHTING CONTROL PEDESTAL SHALL HAVE THE MAJOR COMPONENTS LISTED BELOW.
2. MINOR ASSEMBLY ITEMS SUCH AS DIN RAILS, MOUNTS, FASTENERS, TIE BASES, ETC. ARE NOT SPECIFICALLY ENUMERATED AND MUST BE PROVIDED BY THE DEVELOPER IN ORDER TO ENSURE A COMPLETE AND FUNCTIONAL CONTROL CABINET.
3. EXCEPTING THE PEDESTAL, ENCLOSURE, AND TIME SWITCH, SIEMENS, EATON, AND SQUARE D ARE ACCEPTABLE MANUFACTURERS OF MAJOR COMPONENTS. SIEMENS PART NUMBERS ARE LISTED BELOW AS A STANDARD OF QUALITY.
4. MIXED MANUFACTURERS OF MAJOR COMPONENTS ARE NOT ALLOWED IN A CONTROL PANEL.
5. ALL CONTROL PANELS IN A NEIGHBORHOOD MUST HAVE THE SAME COMPONENTS FROM THE SAME MANUFACTURER.
6. ALL PEDESTAL ENCLOSURES SHALL HAVE PROVISIONS FOR LOCKING, AND SHALL BE COMPATIBLE WITH STANDARD PADLOCK SHANKS.
7. ALL CONTROL PANELS SHALL HAVE POWER SWITCH WITH PROVISIONS FOR LOCKING IN CLOSED POSITION.

PEDESTAL:
MILBANK CATALOG # S9650-0

UTILITY METER SOCKET:
SIEMENS CATALOG # SUAT111-OPQG

CONTROL CABINET:

A:	ENCLOSURE:	AMERITEX WS3R-291408 NEMA ENCLOSURES QUOTATION 31966
B:	CONTACTOR:	SIEMENS CATALOG # LEN00D003120B
C:	MAIN BREAKER:	SIEMENS CATALOG # BQ2B040QLD-TC1Q1
D:	CONTROL BREAKER:	SIEMENS CATALOG # BQ1B010QLD-TC1Q1
E:	HOA SWITCH:	SIEMENS CATALOG # 49SBSB1
F:	NEUTRAL BUS:	SIEMENS CATALOG # ECGB14
G:	TIME SWITCH:	INTERMATIC TALENTO SMART C25
H:	POWER DISTRIBUTION:	SIEMENS CATALOG # 8WA1
I:	ZONE BREAKERS:	SIEMENS CATALOG # BQ2B020QLD-TC1Q1

APPROVED PANEL SHOPS:
CONTRACTORS MAY CHOOSE TO ASSEMBLE CABINETS USING COMPONENTS ABOVE, OR SOURCE ASSEMBLED CONTROL PANELS FROM THE FOLLOWING VENDORS:

1. W.E. MANUFACTURING – REFERENCE QUOTE #WE-S1431496 LEANDER PANEL. CONTACT NUMBER: 832-706-1866.
2. THE DUDLEY COMPANY – REFERENCE QUOTE #180815-001. CONTACT NUMBER: 210-337-4804.

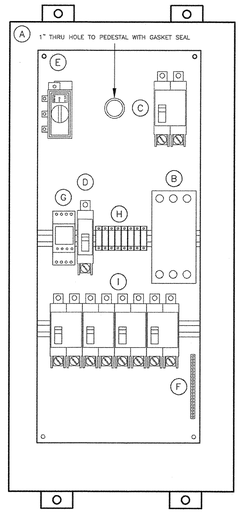

STATE OF TEXAS
THURL D. SIMS III
120127
LICENSED PROFESSIONAL ENGINEER
10/31/2018
F-1394

City of Leander, Texas
DETAIL #402-7
CONTROL PANEL COMPONENT LAYOUT

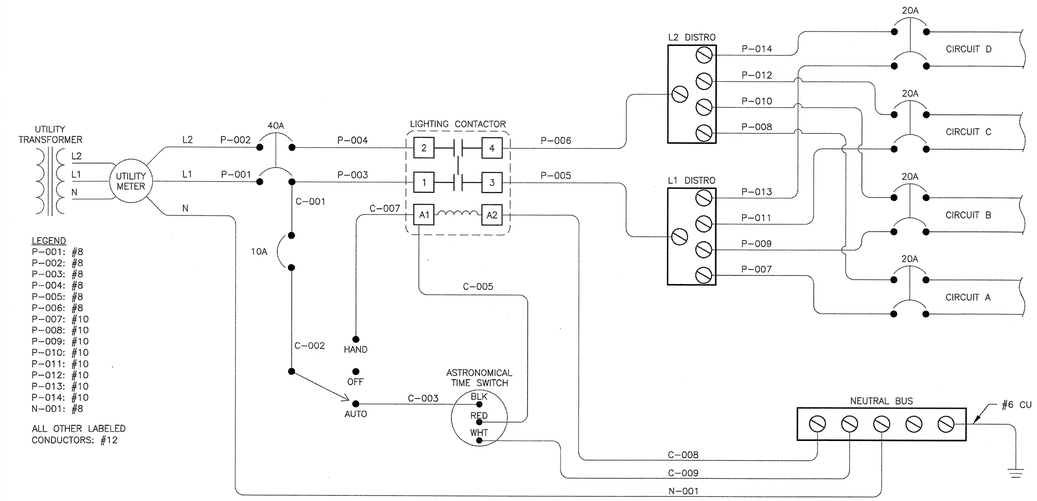

LEGEND
P-001: #8
P-002: #8
P-003: #8
P-004: #8
P-005: #8
P-006: #8
P-007: #10
P-008: #10
P-009: #10
P-010: #10
P-011: #10
P-012: #10
P-013: #10
P-014: #10
N-001: #8

ALL OTHER LABELED CONDUCTORS: #12

STATE OF TEXAS
THURL D. SIMS III
120127
LICENSED PROFESSIONAL ENGINEER
03/28/2018

City of Leander, Texas
DETAIL #402-8
CONTROL PANEL SCHEMATIC

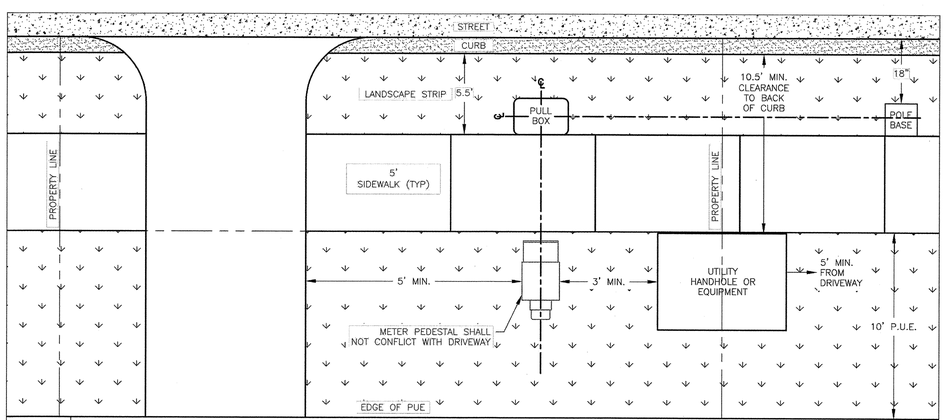

1	POLE BASE AND PEDESTAL PLACEMENT	SCALE: 1/2" : 1'

STATE OF TEXAS
THURL D. SIMS III
120127
LICENSED PROFESSIONAL ENGINEER
03/28/2018

City of Leander, Texas
DETAIL #402-9
DETAILS PAGE 1

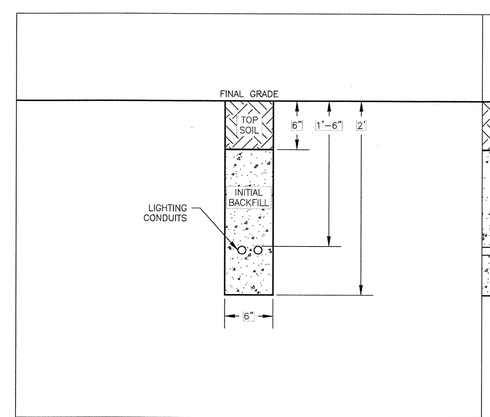

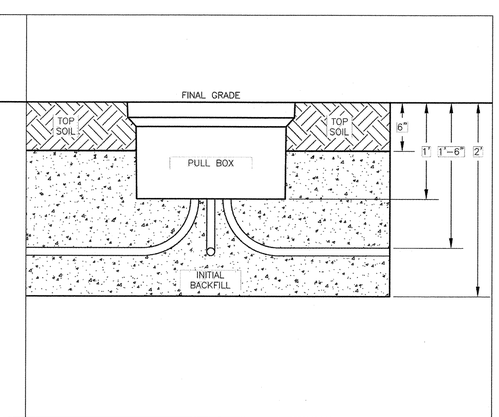

2	LIGHTING CONDUIT TRENCH	SCALE: 1 : 8	3	LIGHTING CONDUIT TRENCH INTERSECTION WITH PULL BOX	SCALE: 1 : 8

STATE OF TEXAS
THURL D. SIMS III
120127
LICENSED PROFESSIONAL ENGINEER
03/28/2018

City of Leander, Texas
DETAIL #402-10
DETAILS PAGE 2

HOMESTEAD PHASE 3 STREET LIGHTING

COUNTY ROAD 279 LEANDER TEXAS 78641

2490120
STATE OF TEXAS
STEVE L. KANETZKY
84696
LICENSED PROFESSIONAL ENGINEER
2/25/20

SKE
S. Kanetzky Engineering, LLC.
5920 W. William Cannon
Bldg. 7, Suite 200
Austin, Texas 78749
(512) 326-3380
www.skaneng.com
TBPE Firm No. F-2356
SKE PROJECT # 2490120

Filename:
Scale: AS NOTED
Drawn By: GB
Checked By: SK
Date: 02/14/2020

DWG Number:

Title:
RESIDENTIAL ROADWAY LIGHTING STANDARDS

E5.1

PLOT DATE: 02/25/20 12:33:03PM, LAYOUT TAB: E5.1, USER: gbreaker, DWG NAME: K:\Projects\2020\2490120-CSD-Homestead Phase 3 Street Lighting\01 Design Phase_CAD\2490120-E51.dwg

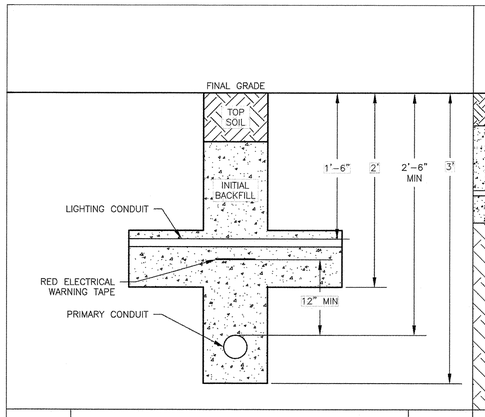

4	LIGHTING CONDUIT CROSSING ELECTRIC UTILITY CONDUIT	SCALE: 1 : 8

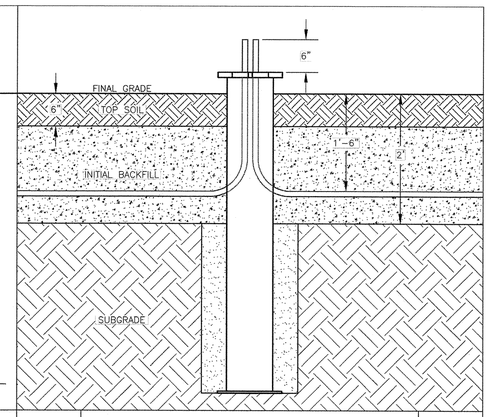

5	CONDUIT AT LIGHT POLE BASE	SCALE: 1 : 12

STATE OF TEXAS
THURL D. SIMS III
120127
LICENSED PROFESSIONAL ENGINEER
03/28/2018

City of Leander, Texas
DETAIL #402-11
DETAILS PAGE 3

L1 SHALL BE MARKED WITH BLACK ELECTRICAL TAPE OR INSULATION COLOR
L2 SHALL BE MARKED WITH RED ELECTRICAL TAPE OR INSULATION COLOR
NEUTRAL SHALL BE MARKED WITH WHITE ELECTRICAL TAPE OR INSULATION COLOR
GROUND SHALL BE MARKED WITH GREEN ELECTRICAL TAPE OR INSULATION COLOR

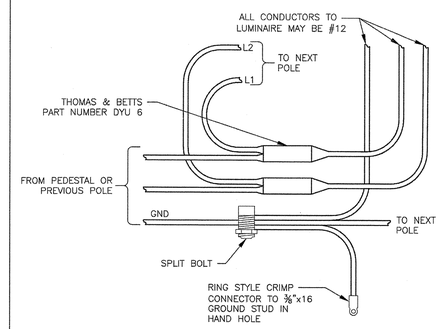

6	JUNCTION WIRING IN HAND HOLE	SCALE: 1 : 4

ALL CABLES AND CONDUCTORS ARE REQUIRED TO BE LABELED. CABLE NUMBERS DESIGNATED IN THE SCHEMATICS ARE TO BE USED ON THE SPECIFIED CABLE ONLY. CABLE MUST BE LABELED ON BOTH ENDS WITH IDENTICAL LABEL TEXT UNLESS THE LENGTH OF CABLE WOULD RENDER TWO LABELS IMPRACTICAL OR ILLEGIBLE.

LABELS SHALL BE CONSTRUCTED IN ONE OF THE TWO FOLLOWING METHODS.

1: COMPUTER PRINTED, SELF LAMINATING LABELS SHALL BE APPLIED TO EACH CABLE SO THAT THE TEXT IS CLEARLY VISIBLE WHEN VIEWING THE DEVICE OR TERMINAL HEAD-ON. CLEAR HEAT SHRINK MUST BE APPLIED OVER THE LABEL AND PROPERLY SHRUNK TO BE FREE OF AIR BUBBLES AND DISCOLORATIONS.

2: AS AN ALTERNATIVE TO METHOD ONE, THERMALLY PRINTED POLYOLEFIN HEAT SHRINK LABELS ARE ACCEPTABLE. OBSERVE THE SAME POSITIONING AND ROTATION REQUIREMENTS AS METHOD ONE.

AT NO TIME SHALL HAND WRITTEN LABELS OR CLOTH NUMERICAL LABELS BE CONSIDERED ACCEPTABLE.

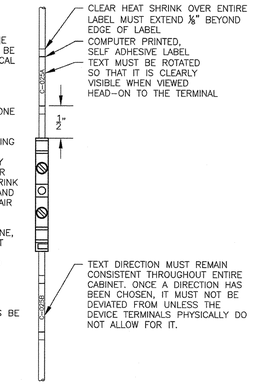

7	LIGHTING CONTROL CABINET CABLE LABELING STANDARD	SCALE: N/A

STATE OF TEXAS
THURL D. SIMS III
120127
LICENSED PROFESSIONAL ENGINEER
03/28/2018

City of Leander, Texas
DETAIL #402-12
DETAILS PAGE 4

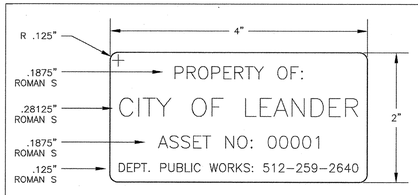

CITY OF LEANDER ASSET TAG SHALL BE CONSTRUCTED OF STAINLESS STEEL. TEXT SHALL BE APPLIED BY LASER ETCHING. ALL FONTS, SIZES, AND POSITIONS ON THE TAG SHALL BE AS PER THIS DETAIL. ALL CORNERS SHALL HAVE A .125" FILLET.

UPON INSPECTION AND APPROVAL OF THE RESIDENTIAL ROADWAY LIGHTING SYSTEM, THE CITY OF LEANDER WILL AFFIX AN ASSET TAG TO EACH LIGHTING CONTROL PANEL SIGNIFYING APPROVAL OF THE SYSTEM AND ASSUMPTION OF OWNERSHIP. ASSET TAGS SHALL BE AFFIXED TO THE PANEL WITH INCLUDED 3M 9472 ADHESIVE.

THIS LABEL DESIGN IS KEPT ON FILE AND MAY BE ORDERED FROM:

THE CUTTING EDGE
4843 NORTH RIDGE ROAD
PERRY, OHIO 44081-9716
1-800-962-2376
WWW.CUTTINGEDGEINC.COM

8	CITY OF LEANDER ASSET TAG	SCALE: 1 : 1

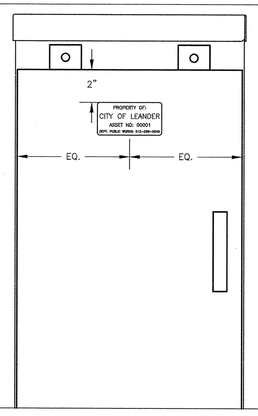

9	ASSET TAG MOUNTING LOCATION	SCALE: 1:4

STATE OF TEXAS
THURL D. SIMS III
120127
LICENSED PROFESSIONAL ENGINEER
03/28/2018

City of Leander, Texas
DETAIL #402-13
DETAILS PAGE 5

HOMESTEAD PHASE 3 STREET LIGHTING

COUNTY ROAD 279

LEANDER TEXAS 78641

2490120
STATE OF TEXAS
STEVE L. KANETZKY
84696
LICENSED PROFESSIONAL ENGINEER
2/25/20

S. Kanetzky Engineering, LLC.
5920 W. William Cannon
Bldg. 7, Suite 200
Austin, Texas 78749
(512) 326-3380
www.skaneng.com
TBPE Firm No. F-2356
SKE PROJECT # 2490120

Filename:
Scale: AS NOTED
Drawn By: GB
Checked By: SK
Date: 02/14/2020

DWG Number:

Title:
RESIDENTIAL ROADWAY LIGHTING STANDARDS

Sheet: 51 OF 55

E5.2

PLOT DATE: 02/25/20 12:33:08PM, LAYOUT TAB: E5.2, USER: gbrubaker, DWG NAME: K:\Projects\2020\2490120-CBD-Homestead Phase 3 Street Lighting\01 Design Phase_CAD\2490120-E52.dwg,

GENERAL CONSTRUCTION NOTES

1. These drawings and documents are submitted to the Owner of the project for review and approval prior to any release for bidding or construction. Contractors shall receive all bid information, instructions, bid forms, general terms and conditions, and all other required clarification from the Owner's Authorized Representative administering this project. Unless otherwise indicated, the Owner's Representative for this project shall be a specifically designated Landscape Architect from SEC Planning. The contractor will also be required to coordinate and correspond with the Landscape Architect from SEC Planning and key consultants for the Owner.

2. These drawings supplement other contractual information which includes Bid Instructions and Project Specifications. Anything mentioned in the Project Specifications and not in the drawings, or vice-versa, shall be of like effect as if shown on or mentioned in both. In case of a discrepancy between Drawings or Project Specifications, the matter shall be immediately submitted to the Owners Representative; without his decision said discrepancy shall not be adjusted by the Contractor, save only at his own risk and expense. The contractor shall not take advantage of any apparent error or omission on the Drawings or in the Specifications. In the event the Contractor discovers such error or omission, he shall immediately notify the Owner's Representative. The Owner's Representative will then make such clarification and interpretations as may be deemed necessary for the Contractor to fulfill the intent of the Contract.

3. The intent of these drawings, details and associated specifications is for the Contractor to provide the Owner with a complete, accurate, functionally and technically sound project as generally described in these documents. In most cases, unless explicitly noted otherwise, drawing symbols are used to represent complete-in-place systems to be provided as part of the base bid. All elements shown or implied by the drawings, if not specifically detailed or specified, shall be installed per building codes, manufacturer's recommendations, state highway department standards, city standards and specifications and standard industry practices.

4. All work within this project shall conform to current local codes, ordinances, as well as all other applicable governing regulations in effect.

5. All range points, ties, benchmarks or other survey control points which may be encountered during construction, must be preserved or modified/recorded by a registered surveyor at the Contractor's expense. Immediately upon discovery, the Contractor shall notify the Owner's Representative of any survey control points found and obtain direction prior to proceeding with construction.

6. The Contractor shall coordinate and obtain all permits which are necessary to perform the proposed work. Owner is to pay for all construction permits unless otherwise indicated in the Contract Documents. Contractor shall obtain, at his expense, all specialty permits needed for specific items included with the work, unless otherwise indicated in the Contract Documents. Should the Contractor commence work, prior to obtaining the required permits or jurisdictional approvals, the Contractor shall be responsible corrections, modifications, replacement or removal of the non-permitted work.

7. It is the Contractor's responsibility to be aware of and comply with all notifications and inspection requirements of the Jurisdiction.

8. Unless specifically noted otherwise in the Contract Documents, the Contractor shall obtain and coordinate all technical tests and reports by a certified independent laboratory or agency as outlined in the Specifications or these Drawings. The Owner may, at the Owner's sole discretion, provide separate testing and/or inspection service and the Contractor is required to fully coordinate with those consultants/contractors. Owner is to pay for all soils and materials testing.

9. An Existing Condition Survey may have been provided to the Owner by registered surveyors under separate contracts for the basis of design. It is not to be considered as part of these Contract Documents. If provided, these survey plans may have been reformatted and included in these documents. The Contractor is required to visit the site to verify information. Without exception, any deviations or omissions found between these plans and existing site conditions shall immediately be brought to the attention of the Owner's Representative, but will not be considered as basis for additional payment except as allowed in change order process per General Conditions and Supplementary Conditions under the "Owner-Contractor Agreements/Contracts. For official survey information, Contractor may wish to contact the Owner, or Owner's surveyor at the Contractors expense.

10. Existing utility information and utility information for proposed work by others that is shown in these documents is approximate and for general information only. It is not intended to depict exact locations of all utilities. The Contractor shall notify all utility companies to stake and field verify the locations including depths of all utilities (existing, proposed by others, or currently under construction), prior to commencing any related operations. Contractor shall maintain utility locations/structures during all remaining phases of work. The Contractor shall report to the Owner's Representative any utilities that may conflict with proposed work. This Contractor shall explore, understand, and coordinate (with subcontractors and others) all utilities impacts prior to submitting bid and shall be responsible for any modifications or damages to utility lines, structures or injuries therefrom. For existing utility information contact Texas 811. A minimum notice of 3 business days in advance of locational needs is required.

11. These drawings do not specify safety materials, staffing, equipment, methods or sequencing to protect persons and property. It shall be the Contractor's sole responsibility to direct and implement safety operations, staffing, procedures to protect the Owner and his representatives, new improvements, property, other contractors, the public and others.

12. The Contractor shall meet periodically with the Owner's Representative to determine marshalling areas, on-site storage, and contractor staff parking and to coordinate security issues, construction sequencing/phasing, scheduling, and maintaining public, emergency, handicapped or operations access before starting the related work. The Contractor shall meet any "Construction Criteria" or requirements shown on any Contract Documents, phasing plans or any imposed plan by the Owner as a part of the Base Bid.

13. Some work in this Contract may occur concurrent with work by others. Phasing, sequencing and coordination, with work by others, and on-going facility operations in and around the site area, is a part of the scope of work for this project. Notice to proceed with work in any general area shall be obtained from the Owner.

14. The Contractor will be required to complete all the work of this project according to these proposed drawings or subsequent clarification. A strict period of performance, including dates of substantial completion (for all and/or portions) and liquidation damages may be an integral element of the Contract.

15. Any site improvements requiring removal under this contract shall be properly and legally disposed off-site or, at the Owner's option, surrendered/stockpiled in an approved on-site location per the direction of the Owner or Owner's Representative.

16. The Contractor is required to maintain a complete and "up-to-date" set of all Contract Documents, including clarifications, change orders, etc., in good condition, at the construction site at all times. This set of documents will be made immediately available for review by the Owner's Representative and/or authorized Consultants upon request. Complete "As-Built" drawings and document submittals are also a requirement of this contract.

17. Maintenance, warranties and performance guarantees may be a requirement of this contract - see specifications.

18. Notes and details on specific drawings shall take precedence over general notes and typical details. The Contractor shall refer to all other Division Notes, Sheets Notes, Drawings and Project Contract Documents for additional information.

19. Contractor shall refer to other related drawings for all other related improvements that will impact this project and require coordination. Drawings may be made available to the Contractors at request.

TREE PROTECTION NOTE

1. All existing trees shall be protected from construction activities within construction zone. During which time, the use of a silt or chain link fence is required around each singular or group of protected trees. Parking of construction vehicles, equipment, and stockpiles within tree root zones is strictly prohibited. Contractor shall be responsible for any damage incurred to existing trees, including replacement, fees, fines or reimbursement to owner for said damages and, or to the City or Jurisdiction with governing authority per the Tree Ordinance.

OAK WILT PREVENTION NOTE

1. If Oak Wilt is found on site within work zone, owner must be notified and the following procedures must be followed in accordance with USDA standards, (http://www.na.fs.fed.us) including disinfecting construction removal devices, tree removal and treatment to prevent development of spore mats. These treatments include debarking, chipping and drying the wood, covering dead wood with plastic, burying the edges for six months and air drying for a similar amount of time to kill fungus and associated insects off site at state designated facility.

SIDEWALK NOTES:

1. Layout of concrete walkways shall be staked in the field and review by the Owner or Owner's Representative prior to construction. At that time walk may be adjusted as needed, using the Hardscape Plan as a guide. All grades and layout shall be confirmed prior to construction. Notify Owner and Owner's Representative of any conflicts or deviations to the issued plans.

2. All pedestrian paths shall be in compliance with all current Texas Accessibility Standards (T.A.S.) and ADA standards.

3. All walkway grades shall have a running slope of no greater than 4.7% (1:21) and a cross-slope that is not greater than 1.5% (1:66).

4. Slopes at or between 5.0% (1:20) and 8.3% (1:12) must have hand rails on both sides with ADA compliant level landings, and cross-slopes shall not exceed 1.5% (1:66).

HARDSCAPE LAYOUT AND INSTALLATION

1. All work shown shall be field staked and subject to field verification, review and approval by the Owner or Owner's Representative prior to any constructions or demolition. Field staking of all proposed work and adjacent construction (even if future work by others) may be required by the Owner's Representative prior to approval of all improvements and adequate stakes shall be provided by Contractor's surveyor.

2. To expedite, the layout of the site layout coordinates and/or grids may have been established in the Drawings. These points shall be field staked by the Contractor's surveyor as a part of this contract. The establishment of these points shall be approved by the Owner's Representative prior to any construction in those areas and will assist the Contractor in the layout of all site improvements as shown on drawing or otherwise.

3. The construction tolerances for this project are minimal and the dimensions shown are to be strictly adhered to.

4. Computed dimensions shall take precedence over scaled dimensions. Large scale drawings shall take precedence over small scale drawings. Dimensions shown with (+/-) shall be the only layout information allowed to vary, and may only vary to the tolerances given.

5. The Contractor is responsible to provide complete-in-place systems, and a complete project. Any intermittent or periodic approvals received for portions of work, stakes, grades, or forms (by the Owner or Owner's Representative, Architects, Engineers, or others) shall not waive the Contractor's requirements to comply with the intent of any and all portions of this contract.

6. All locations for walks, roads, swales, walls, curbs, structures etc. shall be staked by the Contractor. All layout information is based on ground coordinates and the Contractor shall meet with the owner's surveyors and engineers to clarify all datum, benchmark and control point requirements. Specific layout information will be provided to the Contractor by the Owner's Representative in AutoCAD (.dwg) format when requested.

7. It is the intent and requirement of this contract to provide curvilinear walks, walls and curbs with smooth transitions and arcs (both horizontal and vertical). Straight segments and abrupt transitions will not be accepted unless shown as such on the plans. Wood curving forms may be required to obtain the proper effects.

8. Hardscape improvements that are to be constructed per the drawings, shall be coordinated on site with the Owner's Representative, and be field staked or painted for approval of layout by the Owner's Representative prior to installation. Notify the Owner's Representative a minimum of 24 hours in advance for review. Improvements installed without field approval by Owner's Representative may be rejected and will be replaced at Contractors expense.

9. All lot fencing or lot screen walls shall be placed on the property line or property boundary. Contractor shall confirm final location by field staking, to be reviewed by the Owner or Owner's Representative prior to construction.

GRADING NOTES

1. The Contractor shall obtain and review the Summary Report and Recommendations prepared by the geotechnical engineers and fully understand the existing soil conditions encountered prior to submitting bid. The Contractor shall comply with all recommendations made by the geotechnical engineers, civil engineers, structural engineers and Owner's Representative, as designated in the soil report, on these drawings, specified, or as directed during field observations and inspections.

2. All earthwork operations will be subject to full inspection and regular testing by a qualified soils and materials engineer and this Contractor shall be responsible to coordinate scheduling, notification and procuring test results and documentation as required. The Contractor shall notify the Owner's Representative of any subsoil conditions encountered, which vary from those found during previous soil investigations and/or that may not have been known during design. Any failed tests which must be retested will be a Contractor's expense.

3. All earthwork operations shall be conducted in strict compliance with the project specifications including but not limited to:

   a. Full locating, investigating and protection of ALL existing utilities to remain.
   b. Removal of any organic materials or debris.
   c. Stripping and stockpiling of all topsoil in approved location(s).
   d. Removal of all unstable fill materials encountered.
   e. Scarification and re-compaction to the minimum depth as specified and/or directed within all areas to receive fill, pavements or structures.
   f. All classifications of "excavation" as required to meet proposed lines, grades, typical cross sections and improvement elevations.
   g. Placement, shaping, and structural compaction of all classifications of "fill" or "embankment" as required to meet proposed lines, grades, typical cross sections and improvement elevations.
   h. Providing dewatering, optimum moisture control, climate protection, dust control, erosion control and all other specified treatments.
   i. Replacement of topsoil after grading changes have been accomplished.

4. See, and comply with, all specifications for depth of moisture density treatments, controls and compaction requirements.

5. These grading plans are intended to show vertical control of the site and are based upon the benchmarks, existing elevations and topography as provided by the Owner's surveyor. However, the Contractor, upon submittal of bid, agrees to accept the site grades and make all adjustments required to accomplish the work as proposed. Additionally proposed design elevations for adjacent construction projects may have to be incorporated if necessary. (Construction drawings for work by others, if applicable, are available upon request). Staking of future adjacent improvements, by this contract phase or by others, may be required if directed by the Owner's Representative to ensure proper coordination and requested staking is to be provided as part of this Base Bid.

6. This Contractor shall verify all existing grades to remain and all adjacent new construction grades for compliance with those shown, prior to bid and construction. All deviations or conflicts with proposed work shall be reported immediately (with follow-up written) notice within 24 hours to the Owner's Representative for direction to proceed, but will not be considered as basis for additional payment except as allowed in change order process per General Conditions and Supplementary Conditions under the existing "Owner-Contractor Agreements/Contracts".

7. The plans may call for specific temporary benchmarks to be transferred to the site by a certified surveyor and accurately established on site as a part of this contract. Contractor shall verify all benchmarks and information used in design and compare to existing conditions.

8. It is this Contractor's responsibility to provide proper positive drainage throughout this contract area. Field conditions shall be verified in conjunction with the proposed elevations to ensure that adequate drainage is provided. Report deviations or conflicts to Owner's Representative. Unless otherwise indicated, minimum slope for paved surfaces shall be 1% and minimum slope for non-paved areas shall be 2%. Slope away from all structures shall be 3% minimum, for a distance of 5' minimum. Maximum ground slopes to be 4' horizontal to 1' vertical, unless otherwise approved in advance.

9. All design elevations shown are "finished grades" unless otherwise indicated. Contractors shall refer to drawings, details and specifications regarding depth of sub-grade materials required to construct project improvements.

10. All topsoil and/or drainage way muck excavation shall be saved and stockpiled in approved locations for future use.

LIGHTING

1. Landscape lighting system is to be installed by a licensed electrician with documented experience in installing lighting systems of similar scope within the last two years. The Contractor is to supply a complete lighting system including all associated equipment such as conduit, weather proof and/or water proof junction boxes, ballasts, connectors, harnesses, time clocks, photocells, etc.

2. The Contractor shall review proposed layout of lighting system and all related equipment locations with the Owner or Owner's Representative prior to commencing installation.

3. After installation the Contractor will be required to adjust light fixtures until the Owner's Representative is satisfied with the desired effect. This will require the Contractor and/or the Contractor's electrician to meet with the Owner and Owner's Representative after sunset. This adjustment is to be included in the base Bid amount.

4. The Contractor shall provide a two year warranty on all equipment including lamps, ballasts and installation.

5. Independent ballasts, if required, shall be "ganged" in an inconspicuous, accessible location in a horizontal, weatherproof box or tray near ground level. Mounting of ballast in trees will not be allowed without written authorization from the Owner's Representative.

6. All exposed boxes, trays, conduit, etc. shall be painted by the contractor to blend in with surrounding landscape elements.

7. All equipment shall be U.L. listed and installation shall comply with N.E.C. and all other applicable codes.

8. All lights are to be controlled by a photocell on and timer off system unless specified otherwise on the drawings.

9. All wire run underground must be in rigid conduit.

10. Plan layout of underground wiring to minimize disturbance to the roots of existing trees. If underground wiring must pass through the critical root zone of protected trees, trenching and related work must be preformed by hand. No mechanical trenching is permitted within the Critical Root Zone.

11. Tree lighting (if applicable):
    a) Install Karlock (or equal) flexible conduit from base of tree to a minimum eight foot height above ground. At the end of the conduit install a waterproof hub (for single cable) or W-P bell box for multiple cables. Paint conduit and box to match tree trunk. Use SJTO electrical cord from conduit to light fixture. Attach cord to tree using long galvanized cord staples or other approved method. Provide a 36" loop of extra cord at the light fixture to allow for light adjustment and tree growth.
    b) Attach light fixtures to trees utilizing galvanized mounting plates drilled for hub connection with a minimum of two mounting screws. Mounting screws are to be ¼-20 threads x 5" length (one end wood screw threads and the other end bolt threads). Install at least two inches of thread into tree and install with at least two inches between tree and mounting plate.
    c) All tree downlights are to be mounted in the top third of the tree canopy.
    d) All fixtures are to be located, adjusted as needed and shielded to prevent glare, light trespass on to adjacent properties or Rights-of-way.

CITY OF LEANDER APPROVAL

SEC Planning, LLC
Austin, Texas
LAND PLANNING
LANDSCAPE ARCHITECTURE
COMMUNITY BRANDING
4201 W. Parmer Lane, Bldg A 220
Austin, TX 78727
T 512.246.7003
F 512.246.7703
www.secplanning.com
Email : info@secplanning.com

OWNER:
GEHAN HOMES
Barton Creek Plaza III
3815 Capital of Texas Hwy, Suite 275
Austin, TX 78704
T 512.330.9366
F 512.330.9755

REGISTERED LANDSCAPE ARCHITECT
STATE OF TEXAS
2890
07/30/2020

HOMESTEAD
PHASE THREE
LANDSCAPE DEVELOPMENT PLANS
LEANDER, TEXAS

Drawing File Name
T:\190006-GEHAN\Cadfiles\LA\Phase 3\Sheets\LN-1.dwg

Issued:

1.	CITY SUBMITTAL	02/26/2020
2.	CITY RE-SUBMITTAL	05/11/2020
3.	CITY RE-SUBMITTAL	07/30/2020
4.		
5.		

Revisions:
1.
2.
3.
4.
5.

Issue Date: 07/30/2020

Drawn By: NK
Reviewed By: BD

Project No.
190006.03-GEHAN

CONSTRUCTION NOTES

Sheet No.
LN-1 52 OF 61

The reproduction, copying or other use of this drawing without the written consent of SEC Planning, LLC is prohibited.
© 2020
SEC Planning, LLC

CITY CASE # 20-PICP-011

GENERAL PLANTING NOTES

1. Contractor shall be responsible for becoming aware of all related existing conditions, utilities, pipes and structures, etc. prior to bidding and construction. The Contractor shall be held responsible for contacting all utility companies for field location of all underground utility lines, including depths, prior to any excavation. The Contractor shall notify the Owner's representative of apparent conflicts with construction and utilities so that adjustments can be planned prior to installation. Contractor shall take sole responsibility for any and all cost or other liabilities incurred due to damage of said utilities/structures/etc.
2. The Contractor shall not willfully proceed with construction as designed when it is apparent that unknown obstructions and/or grade differences exist that may not have been known during design. Such conditions shall be immediately brought to the attention of the Owner's Representative for clarification. The Contractor shall assume full responsibility for all liabilities, including necessary revisions due to failure to give such notification.
3. Contractor shall be responsible for coordination with subcontractors and other contractors of related trades as required to accomplish the planting and related operations.
4. The acceptable tolerances for this project are minimal and specific layout is required as shown on the layout, planting and other plans. Final location and staking of all plant materials shall be accepted by the Owner's Representative in advance of plantings.
5. Coordinate installation of all plant material with installation of all adjacent irrigation, pavements, curb and related structures. Any damage to existing improvements is the responsibility of the Contractor.
6. Contractor shall notify Owner's Representative 48 hours prior to commencement of work to coordinate project inspection schedules.
7. The Contractor shall take all necessary scheduling and other precautions to avoid climatic damage to plants. A "planting" of specific calendar days is required to be submitted by the Contractor for approval and planting operations should occur per this approved schedule.
8. If conflicts arise between size of areas and plans, Contractor is required to contact Owner's Representative for resolution. Failure to make such conflicts known to the Owner's Representative will result in Contractor's liability to relocate the materials.
9. Plant names may be abbreviated on the drawings. See plant legend for symbols, abbreviations, botanical/common names, sizes, estimated quantities (if given) and other remarks.
10. It is the Contractor's responsibility to furnish all plant materials free of pests or plant diseases. Pre-selected or "tagged" material must be inspected by the Contractor and certified pest and disease free. It is the Contractor's obligation to maintain and warranty all plant materials per the specifications. All plants shall be subject to Owner's approval prior to installation.
11. Where provided, area takeoffs and plant quantity estimates in plant list are for information only. Contractor is responsible to do their own quantity take-offs for all plant materials and sizes shown on plans. In case of any discrepancies, plans take precedence over call-outs and/or the plant list(s).
12. Contractor shall provide "per-unit costs" for every size of plant material, and by type, as called out on Planting Plans in the Bid Proposal. Unit cost to include the plant material itself and installation, including all labor, amendments, fertilizers, warranty, etc., as detailed and specified for each size, "complete in place".
13. The Contractor is responsible to restore all areas of the site, or adjacent areas, where disturbed by operations of or related to the Contractor's work. Sod areas disturbed shall be restored with new sod. Native areas disturbed, if not already improved to meet other requirements of this contract, shall be restored consistent with type, rates and species of existing condition.
14. During plant establishment, native and wetland areas shall be protected from sedimentation and erosion. Prior to construction activities, native and wetland areas outside of the project limits shall be protected with silt fence.
15. When planting trees and shrubs in existing natural areas, minimize disturbance to adjacent existing vegetation.
16. No Ball & Burlap (B&B) material will be allowed or accepted unless specifically specified.
17. All plants shall be nursery grown, Grade 1 plants meeting American Nursery and Landscape Association (ANLA) standards set forth in the "American Standard for Nursery Stock" (ANSI Z60.1-2004). Plants are to be typical in shape and size for species. Plants shall not be root-bound or loose in their containers. Handle all plants with care in transporting, planting and maintenance until inspection and final acceptance.
18. Warranty: Provide a one-year replacement warranty for all plant materials. Warranty shall cover plants which have died or partially died (thereby ruining their natural shape), but shall not include damage by vandalism, browsing, hail, abnormal freezes, drought or negligence by the Owner. The Warranty is intended to cover Contractor negligence, infestations, disease and damage or shock to plants. Plants replaced under Warranty will be warranted for one year following replacement.

PLANTING LAYOUT AND INSTALLATION

1. The Contractor shall be responsible for accurately laying out the plant beds and lawn areas by scaling the Drawings. The Contractor shall provide paint lines/stakes/hose or other means to fully indicate the specific layout geometry of all bed lines for approval by Owner's Representative prior to installation. The Contractor's Base Bid shall anticipate minor adjustments as directed by the Landscape Architect in the field. Changes affecting quantities will be covered by unit prices.
2. Following the approval of layout, the Contractor shall closely coordinate the installation of the irrigation system to conform to the approved layout.
3. All planting beds are to be separated from adjacent Turf Sod, Turf Seed and Native Seed areas with edging per specifications and details. Additional locations may be indicated on the Drawings. Install edging following manufacture's installation instructions. Maintain an accurate layout with smooth curves and transitions, free of kinks and abrupt bends. Top of edging is to be 1" above soil level of adjacent turf. In Bid Proposal furnish a unit price per linear foot of edging installed.
4. Provide matching sizes and forms for all species of trees and plants installed on grid or spaced equally in rows as shown on drawings. Adjust spacing (to "equal-equal") as necessary, subject to acceptance by the Owner's Representative.
5. Unless otherwise indicated:

   a. All groupings of groundcovers, perennials, ornamental grasses and annuals shall be triangularly spaced (equal-equal).
   b. All planting areas including sod, seed and planting beds, shall receive soil amendments per the notes and specifications.
   c. Sodded lawn shall have been grown between 9 and 18 months and shall be vigorous, well-rooted and healthy turf. Minimum thatch thickness shall be ¾".
   d. Specific plant bed areas may be called out to receive weed barrier fabric, see plans and details.
   e. All bulb planting shall occur after mid-October and before ground is frozen. See details for bulb planting layout.
6. All Plant Beds and pit planted plants shall receive a 3" depth layer of shredded hardwood mulch. Refer to plans, details and specifications for location and type of any alternate mulch used. In Bid Proposal furnish a unit price(s) per cubic yard of mulch(es) placed. This unit price(s) will be used in the adjustment of bed areas.
7. Planting pits for 1 and 5 gallon shrubs shall be at least 8" larger in diameter than the container size. Larger container sizes and B&B plants shall be planted in pits at least 3 times larger in diameter than the root ball size.
8. Plants shall be installed to present their best side facing the viewer.
9. Owner's representative shall have final approval of plant material layout.

NOTES FOR TREE AND NATURAL AREA PROTECTION

1. All trees and natural areas shown on plan to be preserved shall be protected during construction with temporary fencing.
2. Protective fences shall be erected according to City of Leander Standards for Tree Protection.
3. Protective fences shall be installed prior to the start of any site preparation work (clearing, grubbing or grading), and shall be maintained throughout all phases of the construction project.
4. Erosion and sedimentation control barriers shall be installed or maintained in a manner which does not result in soil build-up within tree drip lines.
5. Protective fences shall surround the trees or group of trees, and will be located at the outermost limit of branches (drip line) or critical root zone, whichever is greater, for natural areas, protective fences shall follow the Limit of Construction line, in order to prevent the following:
   A. Soil compaction in the root zone area resulting from vehicular traffic or storage of equipment or materials;
   B. Root zone disturbances due to grade changes (greater than 6 inches cut or fill), or trenching not reviewed and authorized by the City Aborist;
   C. Wounds to exposed roots, trunk or limbs by mechanical equipment;
   D. Other activities detrimental to trees such as chemical storage, cement truck cleaning, and fires.
6. Exceptions to installing fences at tree drip lines may be permitted in the following cases:
   A. Where there is to be an approved grade change, impermeable paving surface, tree well, or other such site development, erect the fence approximately 2 to 4 feet beyond the area disturbed;
   B. Where permeable paving is to be installed within a tree's drip line, erect the fence at the outer limits of the permeable paving area (prior to site grading so that this area is graded separately prior to paving installation to minimized root damage);
   C. Where trees are close to proposed buildings, erect the fence to allow 6 to 10 feet of work space between the fence and the building;
   D. Where there are severe space constraints due to tract size, or other special requirements, the City Planning Department should be contacted at (512) 528-2750 to discuss alternatives.

Special Note: For the protection of natural areas, no exceptions to installing fences at the Limit of Construction line will be permitted.

1. Where any of the above exceptions result in a fence being closer than 4 feet to a tree trunk, protect the trunk with strapped-on planking to a height of 8 ft (or to the limits of lower branching) in addition to the reduced fencing provided.
2. Trees approved for removal shall be removed in a manner which does not impact trees to be preserved.
3. Any roots exposed by construction activity shall be pruned flush with the soil. Backfill root areas with good quality top soil as soon as possible. If exposed root areas are not backfilled within 2 days, cover them with organic material in a manner which reduces soil temperature and minimizes water loss due to evaporation.
4. Any trenching required for the installation of landscape irrigation shall be placed as far from existing tree trunks as possible.
5. No landscape topsoil dressing greater than 4 inches shall be permitted within the drip line of trees. No soil is permitted on the root flare of any tree.
6. Pruning to provide clearance for structures, vehicular traffic and equipment shall take place before damage occurs (ripping of branches, etc.).
7. All finished pruning shall be done according to recognized, approved standards of the industry (Reference the National Arborist Association Pruning Standards for Shade Trees available on request from the City Arborist).
8. Deviations from the above notes may be considered ordinance violations if there is substantial noncompliance or if a tree sustains damage as a result.
9. A minimum of three inches (3") of mulch or compost shall be spread beneath the drip line of the preserved tree.
10. no person shall excavate any ditches, tunnels or trenches, place any paving material or place any drive or parking area within the drip line of any Protected or Heritage tree without prior written approval of the City Administrator or his/her designee at the time of Site Development Permit approval.
11. No person shall attach any rope, wire, nails, advertising posters or other contrivance to any Protected or Heritage tree.

CITY OF LEANDER LANDSCAPE NOTES:

1. Mechanical equipment shall be screened from view of at least sixty (60%) percent of any street or public right-of-way.
2. Tree caliper is the trunk diameter of a tree at four (4') feet above natural grade per the Composite Zoning Ordinance.
3. A minimum 6-inch topsoil depth will be provided in all landscaped areas and mulch will be provided around plantings.
4. All new landscapes (non-residential and residential) are required to have a minimum of six inches (6") of soil depth in areas planted with turfgrass. This six-inch (6") minimum soil depth will consist of 75 percent soil blended with 25 percent compost. The soil/compost blend shall be incorporated into the top two inches of the native. The six-inch (6") depth requirement does not apply to the area between the drip line and trunk of existing trees, shrub beds or wildscape areas. Areas with existing native vegetation that remain undisturbed shall be exempt from the soil depth provision; provided that native soil and vegetation in such area is fenced during construction and protected from disturbance and compaction during the construction process.
5. Contractor is required to plant (1) 2" caliper tree internal to the lot.
6. Contractor is required to plant (1) 2" caliper street tree for each lot. Street tree placement may vary based on driveway location and/or utility conflicts.

PLANT SCHEDULE

TREES	QTY	BOTANICAL / COMMON NAME	CONTAINER	CALIPER	HT/SPD	WATER USE
QUTE	7	Quercus texana / Texas Red Oak	Container Grown	3"Cal	12-15 H X 8 Spd	VL, D, 60-75 Ht x 15-30 Sp @ Maturity
QUVI	10	Quercus virginiana / Southern Live Oak	Container Grown	3"Cal	12-15 H X 8 Spd	L-VL, E, 40-60 Ht x 50 Spd @ Maturity
ULCR	9	Ulmus crassifolia / Cedar Elm	Container Grown	3"Cal	12-15 H X 8 Spd	VL, D, 50-75 Ht x 25-35 Spd @ Maturity

SHRUBS	QTY	BOTANICAL / COMMON NAME	CONTAINER	CONTAINER SIZE	NOTES	WATER USE
ILVN	38	Ilex vomitoria Nana / Dwarf Yaupon	5 gal, cont. grwn	L		
MYDD	5	Myrica cerifera Dons Dwarf / Dons Dwarf Wax Myrtle	5 gal, cont. grwn	L-M		
ROKO	61	Rosa x Double Knockout / Rose	5 gal, cont. grwn	M		

GRASSES	QTY	BOTANICAL / COMMON NAME	CONTAINER	CONTAINER SIZE	NOTES	WATER USE
STTE	78	Stipa tenuissima / Mexican Feathergrass	1 gal, cont. grwn	L		

TURF GRASS/ PLANT BEDS

NAME	TOTAL	UNITS	DESCRIPTION	
Plant Bed	1,598	sf		
	30	cy	Planting mix	6" depth (Pro-Gro Soil Mix by Whittlesey Landscape Supply or approved equal)
	15	cy	Mulch	3" Depth (Native Hardwood Mulch)
Cynodon dactylon `Tif 419` / Bermuda Grass	48,657	sf		*Cynodon dactylon "TIFWAY 419"*
	5,406	sy	Turf Sod	Bermuda T419
	901	cy	Top Soil	6" Depth (75% Chocolate Loam / 25% Compost)
Cynodon dactylon / Bermuda Seed Hydromulch	17,233	sf		*Cynodon dactylon*
	1,915	sy	Turf Seed	Common Bermuda
	106	cy	Top Soil	2" Depth (Chocolate Loam)

MISCELANEOUS

NAME	TOTAL	UNITS	DESCRIPTION	COMMENTS
Texas Hardwood Mulch	81	cy	3" depth	
Steel Edging	934	lf	3/16" thick; Brown	
Masonry Walls	618	lf		see detail 1/LP-D1
Masonry Columns	6	ea		see detail 3/LP-D1
Wood Fence	90	lf		see detail 5/LP-D1

CITY OF LEANDER APPROVAL

SEC Planning, LLC
Austin, Texas
LAND PLANNING
LANDSCAPE ARCHITECTURE
COMMUNITY BRANDING
4201 W. Parmer Lane, Bldg A 220
Austin, TX 78727
T 512.246.7003
F 512.246.7703
www.secplanning.com
Email : info@secplanning.com

OWNER:
GEHAN HOMES
Barton Creek Plaza III
3815 Capital of Texas Hwy, Suite 275
Austin, TX 78704
T 512.330.9366
F 512.330.9755

REGISTERED LANDSCAPE ARCHITECT
BENEDICT P. DEBELLIS
2690
STATE OF TEXAS
07/30/2020

HOMESTEAD
PHASE THREE
LANDSCAPE DEVELOPMENT PLANS
LEANDER, TEXAS

Drawing File Name
T:\190006-GEHAN\Cadfiles\LA\Phase 3\Sheets\LP-N1.dwg

Issued:
1. CITY SUBMITTAL 02/26/2020
2. CITY RE-SUBMITTAL 05/11/2020
3. CITY RE-SUBMITTAL 07/30/2020
4.
5.

Revisions:
1.
2.
3.
4.
5.

Issue Date: 07/30/2020

Drawn By: NK
Reviewed By: BD

Project No.
190006.03-GEHAN

LANDSCAPE NOTES / PLANT SCHEDULE

Sheet No.
LP-N1 53 OF 61

The reproduction, copying or other use of this drawing without the written consent of SEC Planning, LLC is prohibited.
© 2020
SEC Planning, LLC

CITY CASE # 20-PICP-011

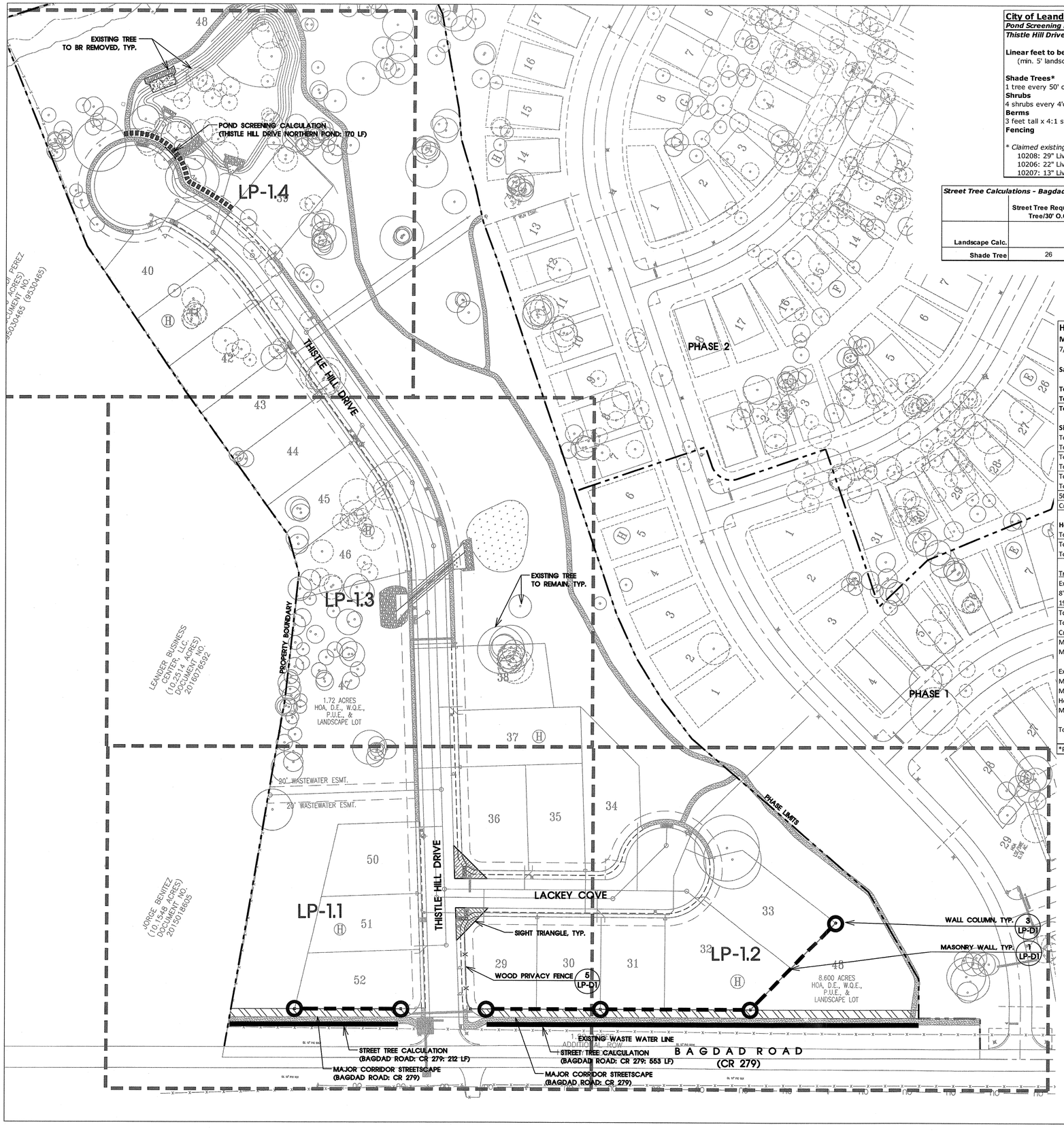

City of Leander Landscape Calculations

Pond Screening Requirements

Thistle Hill Drive Northern Pond

		REQUIRED	PROVIDED
Linear feet to be screened (min. 5' landscape area)	170 LF		
Shade Trees* 1 tree every 50' o.c.		3	6*
Shrubs 4 shrubs every 4'o.c.		43	44
Berms 3 feet tall x 4:1 slopes		NA	NA
Fencing		NA	NA

** Claimed existing trees 8" caliper or greater*
10208: 29" Live Oak
10206: 22" Live Oak
10207: 13" Live Oak

Street Tree Calculations - Bagdad Rd (CR 279) 765 LF

	Street Tree Required 1 Tree/30' O.C.	Existing Trees claimed (8" min. cal.)	Proposed Trees	Total
Landscape Calc.				
Shade Tree	26	0	26	26

LEGEND

SYMBOL	DESCRIPTION
	POND SCREENING CALCULATION
	SHEET MATCHLINES
	MAJOR CORRIDOR - BAGDAD RD (CR 279) SEE SHEET LP-1.5 FOR PLANT MATERIAL
	MASONRY WALL
— X —	STAINED WOODEN FENCE
	MASONRY COLUMN
	PHASE BOUNDARY
10202	EXISTING TREE TO BE REMOVED
10202	EXISTING TREE TO REMAIN

LOT SUMMARY

TOTAL LOTS	21 LOTS
TOTAL 2" CAL. ● DBH TREES REQUIRED YARD TREE (2 PER LOT) TO BE INSTALLED AT HOME CONSTRUCTION	42 TREES

Homestead Phase 3
MITIGATION CALCULATIONS
7/30/2020

Saved/Removed Summary

Total Inches	3400 Inches	
Total Inches Removed Per Zoning Ordinance with no mitigation required*	288.25 Inches	
Total Inches Subject to Mitigation under the Zoning Ordinance	3111.75 Inches	
Significant Trees 8"-25"		
Total Inches 8"-18"	2614 Inches	
Total Inches 19"-25"	569.75 Inches	
Total Inches Saved 8"-18"	2138 Inches	81.79%
Total Inches Removed 8"-18"	476 Inches	18.21%
Total Inches Saved 19"-25"	349.5 Inches	61.34%
Total Inches Removed 19"-25"	220.25 Inches	38.66%
50% of Total 8"-18" Removed with No Mitigation Required	1,307.00 Inches	50.00%
Credit Inches Saved Above 50% (8"-18")	831.00 Inches	31.79%
Heritage Trees 26"+		
Total Inches	216.25 Inches	100.00%
Total Inches Saved	216.25 Inches	100.00%
Total Inches Removed	0 Inches	0.00%
Tree Mitigation		
Existing 8"-18" Trees Inches Removed Above 50%	0.00 Inches	
8"-18" Mitigation Inches Required (Replace at 1:1)	0.00 Inches	0 trees (2" Caliper)
19"-25" Mitigation Inches Required (Replace at 2:1)	441 Inches	220 trees (2" Caliper)
Total Mitigation Inches Required	440.50 Inches	
Total Mitigation Inches Provided	0 Inches	0 trees (2" Caliper)
Credit Inches Provided (Saved Trees 8"-18" above 50%)	831 Inches	
Mitigation Inches Remaining	0.00	
Mitigation Inches Fee In Lieu (Required Inches X $150/caliper inch)	$0.00	
Existing Heritage Trees Inches Removed	0 Inches	
Mitigation Inches Required (Replace at 3:1)	0 Inches	0 trees (2" Caliper)
Mitigation Inches Provided	0 Inches	0 trees (2" Caliper)
Heritage Removal Fee (Removed Inches x $300/caliper inch)	$0.00	
Mitigation Inches Fee in Lieu (Required Inches x $150/caliper inch)	$0.00	
Total Mitigation Fees / Fee in Lieu for Significant and Heritage Trees	$0.00	

*Per the Zoning Ordinance Trees within Building Pads are not included in the Mitigation Requirement.

FULL SIZE SCALE: 1" = 60'
0 30 60 120 NORTH

CITY OF LEANDER APPROVAL

SEC Planning, LLC
Austin, Texas
LAND PLANNING
LANDSCAPE ARCHITECTURE
COMMUNITY BRANDING
4201 W. Parmer Lane, Bldg A 220
Austin, TX 78727
T 512.246.7003
F 512.246.7703
www.secplanning.com
Email : info@secplanning.com

OWNER:
GEHAN HOMES
Barton Creek Plaza III
3815 Capital of Texas Hwy, Suite 275
Austin, TX 78704
T 512.330.9366
F 512.330.9755

REGISTERED LANDSCAPE ARCHITECT BENEDICT P. DERELA 2690 STATE OF TEXAS
07/30/2020

HOMESTEAD
PHASE THREE
LANDSCAPE DEVELOPMENT PLANS
LEANDER, TEXAS

Drawing File Name
T:\190006-GEHAN\Cadfiles\LA\Phase 3\Sheets\LP-1.0.dwg

Issued:
1. CITY SUBMITTAL 02/26/2020
2. CITY RE-SUBMITTAL 05/11/2020
3. CITY RE-SUBMITTAL 07/30/2020
4.
5.

Revisions:
1.
2.
3.
4.
5.

Issue Date: 07/30/2020

Drawn By: NK
Reviewed By: BD

Project No.
190006.03-GEHAN

OVERALL LAYOUT PLAN

Sheet No.
LP-1.0 54 OF 61

The reproduction, copying or other use of this drawing without the written consent of SEC Planning, LLC is prohibited.
© 2020
SEC Planning, LLC

CITY CASE # 20-PICP-011

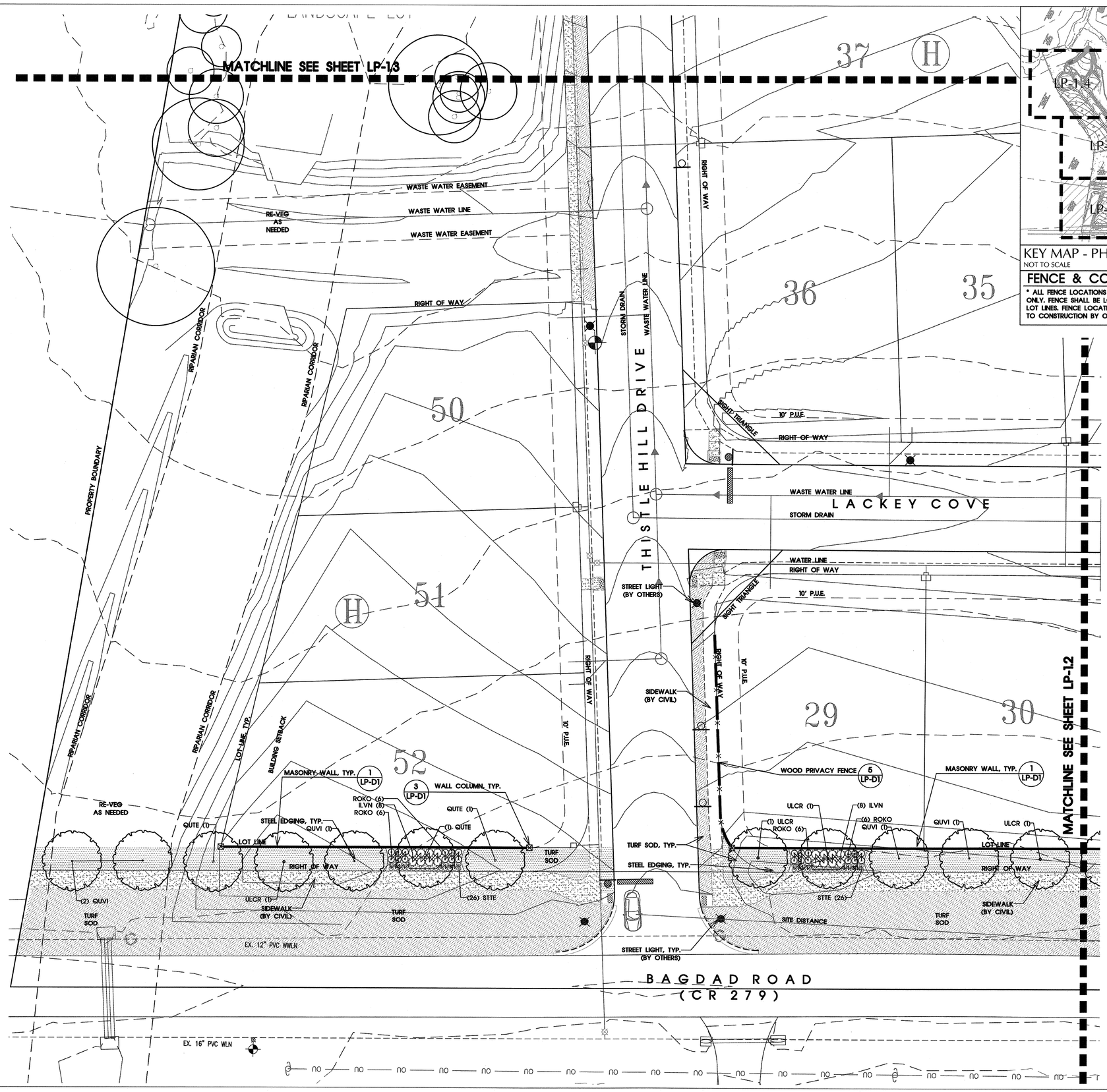

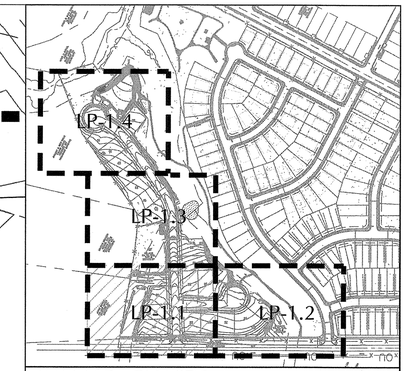

KEY MAP - PHASE 3
NOT TO SCALE

FENCE & COLUMN NOTE

* ALL FENCE LOCATIONS SHOWN ARE GRAPHIC REPRESENTATIONS ONLY. FENCE SHALL BE LOCATED ON THE PROPERTY LINE AND HOME LOT LINES. FENCE LOCATIONS SHALL BE STAKED AND APPROVED PRIOR TO CONSTRUCTION BY OWNER AND OR LANDSCAPE ARCHITECT.

FULL SIZE SCALE: 1" = 20'
0 10 20 40 NORTH

CITY OF LEANDER APPROVAL

SEC Planning, LLC
Austin, Texas
LAND PLANNING
LANDSCAPE ARCHITECTURE
COMMUNITY BRANDING
4201 W. Parmer Lane, Bldg A 220
Austin, TX 78727
T 512.246.7003
F 512.246.7703
www.secplanning.com
Email : info@secplanning.com

OWNER:
GEHAN HOMES
Barton Creek Plaza III
3815 Capital of Texas Hwy, Suite 275
Austin, TX 78704
T 512.330.9366
F 512.330.9755

REGISTERED LANDSCAPE ARCHITECT
BENEDICT P. DESELICH
1890
STATE OF TEXAS
07/30/2020

HOMESTEAD
PHASE THREE
LANDSCAPE DEVELOPMENT PLANS
LEANDER, TEXAS

Drawing File Name
T:\190006-GEHAN\Cadfiles\LA\Phase 3\LPX Base_Phase 3.dwg

Issued:
1. CITY SUBMITTAL 02/26/2020
2. CITY RE-SUBMITTAL 05/11/2020
3. CITY RE-SUBMITTAL 07/30/2020
4.
5.

Revisions:
1.
2.
3.
4.
5.

Issue Date: 07/30/2020

Drawn By: NK
Reviewed By: BD

Project No.
190006.03-GEHAN

PLANTING PLAN

Sheet No.
LP-1.1 55 OF 61

The reproduction, copying or other use of this drawing without the written consent of SEC Planning, LLC is prohibited.
© 2020
SEC Planning, LLC

CITY CASE # 20-PICP-011

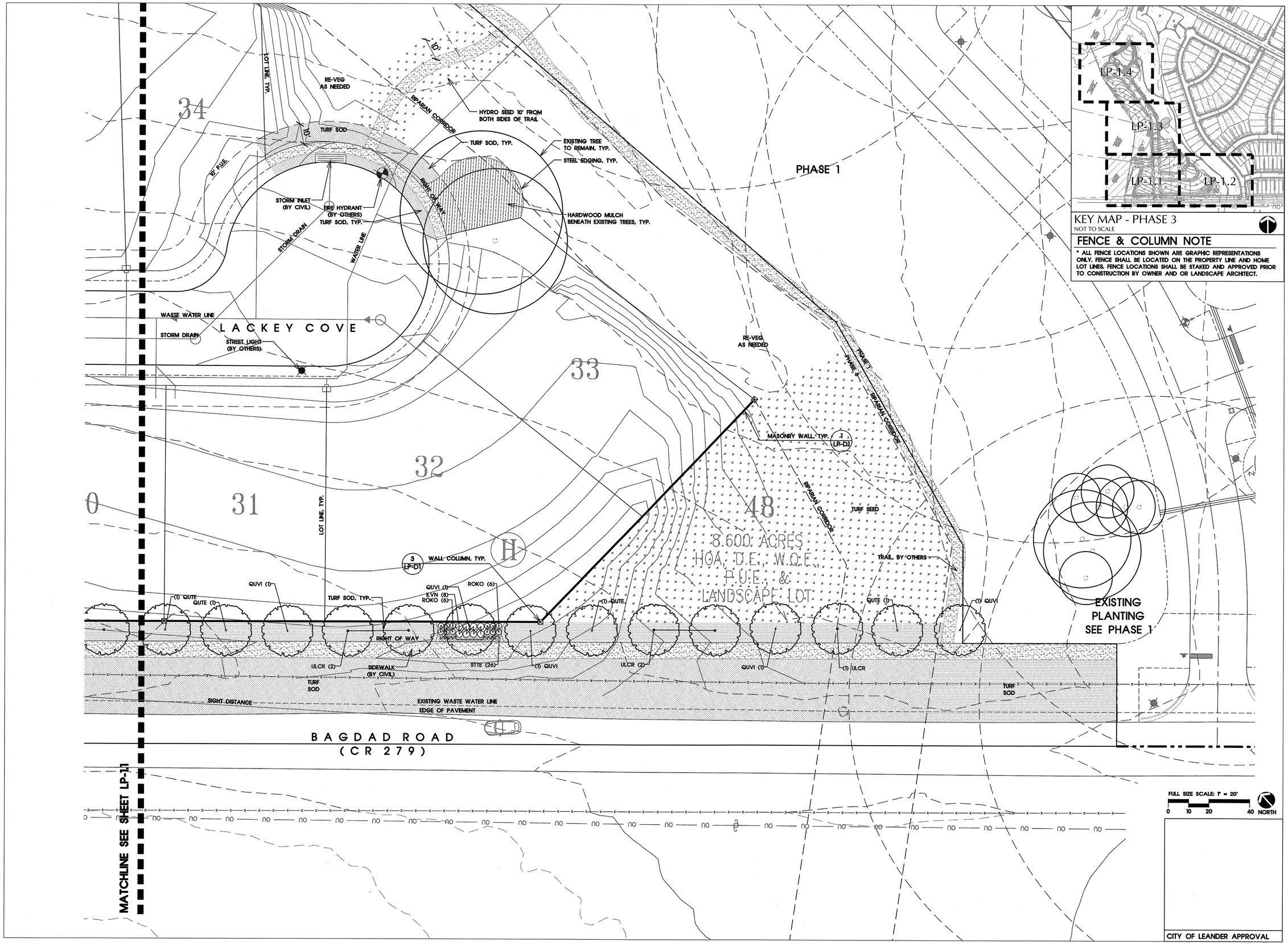

KEY MAP - PHASE 3
NOT TO SCALE

FENCE & COLUMN NOTE

* ALL FENCE LOCATIONS SHOWN ARE GRAPHIC REPRESENTATIONS ONLY. FENCE SHALL BE LOCATED ON THE PROPERTY LINE AND HOME LOT LINES. FENCE LOCATIONS SHALL BE STAKED AND APPROVED PRIOR TO CONSTRUCTION BY OWNER AND OR LANDSCAPE ARCHITECT.

SEC Planning, LLC
Austin, Texas
LAND PLANNING
LANDSCAPE ARCHITECTURE
COMMUNITY BRANDING
4201 W. Parmer Lane, Bldg A 220
Austin, TX 78727
T 512.246.7003
F 512.246.7703
www.secplanning.com
Email : info@secplanning.com

OWNER:
GEHAN HOMES
Barton Creek Plaza III
3815 Capital of Texas Hwy, Suite 275
Austin, TX 78704
T 512.330.9366
F 512.330.9755

REGISTERED LANDSCAPE ARCHITECT
BENEDICT P. DEBELL
2690
STATE OF TEXAS
07/30/2020

HOMESTEAD
PHASE THREE
LANDSCAPE DEVELOPMENT PLANS
LEANDER, TEXAS

Drawing File Name
T:\190006-GEHAN\Cadfiles\LA\Phase 3\LPX Base_Phase 3.dwg

Issued:
1. CITY SUBMITTAL 02/26/2020
2. CITY RE-SUBMITTAL 05/11/2020
3. CITY RE-SUBMITTAL 07/30/2020
4.
5.

Revisions:
1.
2.
3.
4.
5.

Issue Date: 07/30/2020

Drawn By: NK
Reviewed By: BD

Project No.
190006.03-GEHAN

PLANTING PLAN

Sheet No.
LP-1.2 56 OF 61

The reproduction, copying or other use of this drawing without the written consent of SEC Planning, LLC is prohibited.
© 2020
SEC Planning, LLC

CITY CASE # 20-PICP-011

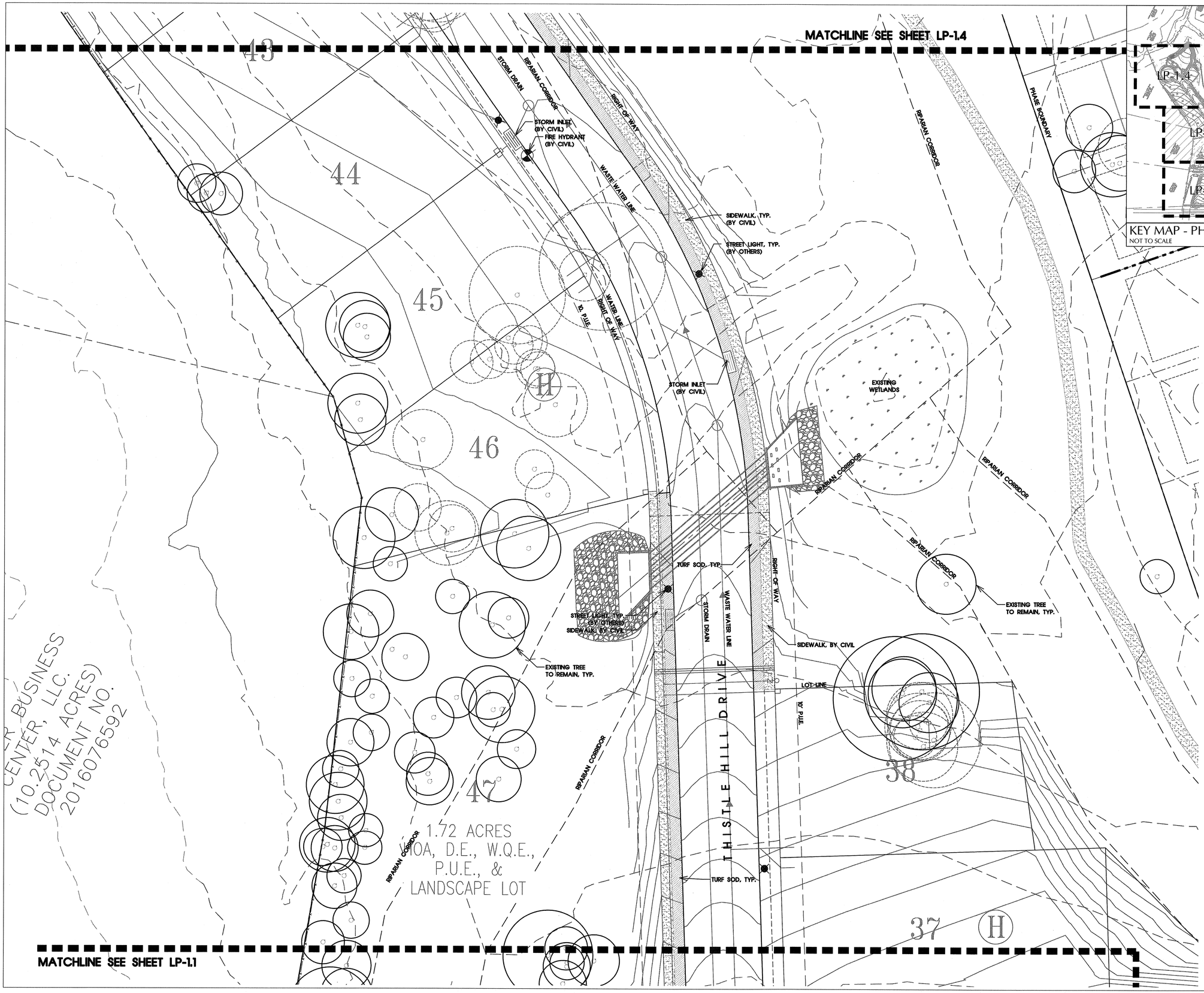

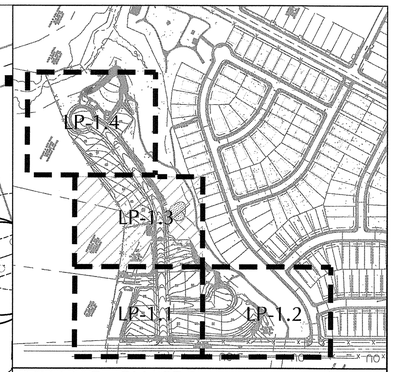

KEY MAP - PHASE 3
NOT TO SCALE

CITY OF LEANDER APPROVAL

SEC Planning, LLC
Austin, Texas
LAND PLANNING
LANDSCAPE ARCHITECTURE
COMMUNITY BRANDING
4201 W. Parmer Lane, Bldg A 220
Austin, TX 78727
T 512.246.7003
F 512.246.7703
www.secplanning.com
Email : info@secplanning.com

OWNER:
GEHAN HOMES
Barton Creek Plaza III
3815 Capital of Texas Hwy, Suite 275
Austin, TX 78704
T 512.330.9366
F 512.330.9755

REGISTERED LANDSCAPE ARCHITECT
BENEDICT P. DEBELLIS
2690
STATE OF TEXAS

07/30/2020

HOMESTEAD
PHASE THREE
LANDSCAPE DEVELOPMENT PLANS
LEANDER, TEXAS

Drawing File Name
T:\190006-GEHAN\Cadfiles\LA\Phase 3\LPX Base_Phase 3.dwg

Issued:
1. CITY SUBMITTAL 02/26/2020
2. CITY RE-SUBMITTAL 05/11/2020
3. CITY RE-SUBMITTAL 07/30/2020
4.
5.

Revisions:
1.
2.
3.
4.
5.

Issue Date: 07/30/2020

Drawn By: NK
Reviewed By: BD

Project No.
190006.03-GEHAN

PLANTING PLAN

Sheet No.
LP-1.3 57 OF 61

The reproduction, copying or other use of this drawing without the written consent of SEC Planning, LLC is prohibited.
© 2020
SEC Planning, LLC

CITY CASE # 20-PICP-011

TRAIL, BY OTHERS
HARDWOOD MULCH BENEATH EXISTING TREES, TYP.
RIPARIAN CORRIDOR
TURF SOD
STEEL EDGING, TYP.
RE-VEG AS NEEDED
STORMWATER POND (BY CIVIL)
(15) ROKO
(9) ILVN
(3) MYDD
EXISTING TREES TO BE REMOVED, TYP.
STORM INLET (BY CIVIL)
EXISTING TREES TO BE REMOVED, TYP.
SIDEWALK, TYP. (BY CIVIL)
STREET LIGHT, TYP. (BY OTHERS)
EXISTING TREES TO REMAIN, TYP.
RIGHT OF WAY
LOT LINE
(1) MYDD
(5) ILVN
(1) MYDD
ROKO (10)
FIRE HYDRANT (BY CIVIL)
SIDEWALK, TYP. (BY CIVIL)
STORM INLET (BY CIVIL)
WASTE WATER LINE
STORM DRAIN
WATER LINE
RIGHT OF WAY
10' P.U.E.
STREET LIGHT (BY OTHERS)
THISTLE HILL DRIVE
PROPERTY LINE
WATER LINE
STORM DRAIN
WASTE WATER LINE
STORM INLET (BY CIVIL)
TURF SOD, TYP.
39
40
41
42
43
MATCHLINE SEE SHEET LP-1.3

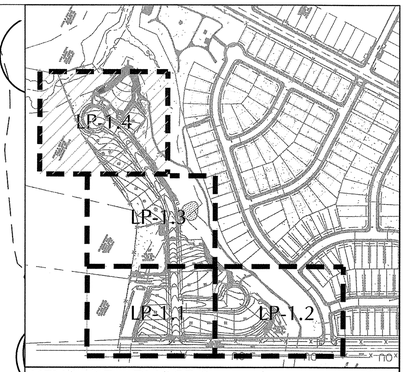

KEY MAP - PHASE 3
NOT TO SCALE

FULL SIZE SCALE: 1" = 20'
0 10 20 40 NORTH

CITY OF LEANDER APPROVAL

SEC Planning, LLC
Austin, Texas
LAND PLANNING
LANDSCAPE ARCHITECTURE
COMMUNITY BRANDING
4201 W. Parmer Lane, Bldg A 220
Austin, TX 78727
T 512.246.7003
F 512.246.7703
www.secplanning.com
Email : info@secplanning.com

OWNER:
GEHAN HOMES
Barton Creek Plaza III
3815 Capital of Texas Hwy, Suite 275
Austin, TX 78704
T 512.330.9366
F 512.330.9755

REGISTERED LANDSCAPE ARCHITECT
BENEDICT P. DEBOLT
2890
STATE OF TEXAS

07/30/2020

HOMESTEAD
PHASE THREE
LANDSCAPE DEVELOPMENT PLANS
LEANDER, TEXAS

Drawing File Name
T:\190006-GEHAN\Cadfiles\LA\Phase 3\LPX Base_Phase 3.dwg

Issued:
1. CITY SUBMITTAL 02/26/2020
2. CITY RE-SUBMITTAL 05/11/2020
3. CITY RE-SUBMITTAL 07/30/2020
4.
5.

Revisions:
1.
2.
3.
4.
5.

Issue Date: 07/30/2020

Drawn By: NK
Reviewed By: BD

Project No.
190006.03-GEHAN

PLANTING PLAN

Sheet No.
LP-1.4 58 OF 61

The reproduction, copying or other use of this drawing without the written consent of SEC Planning, LLC is prohibited.
© 2020
SEC Planning, LLC

CITY CASE # 20-PICP-011

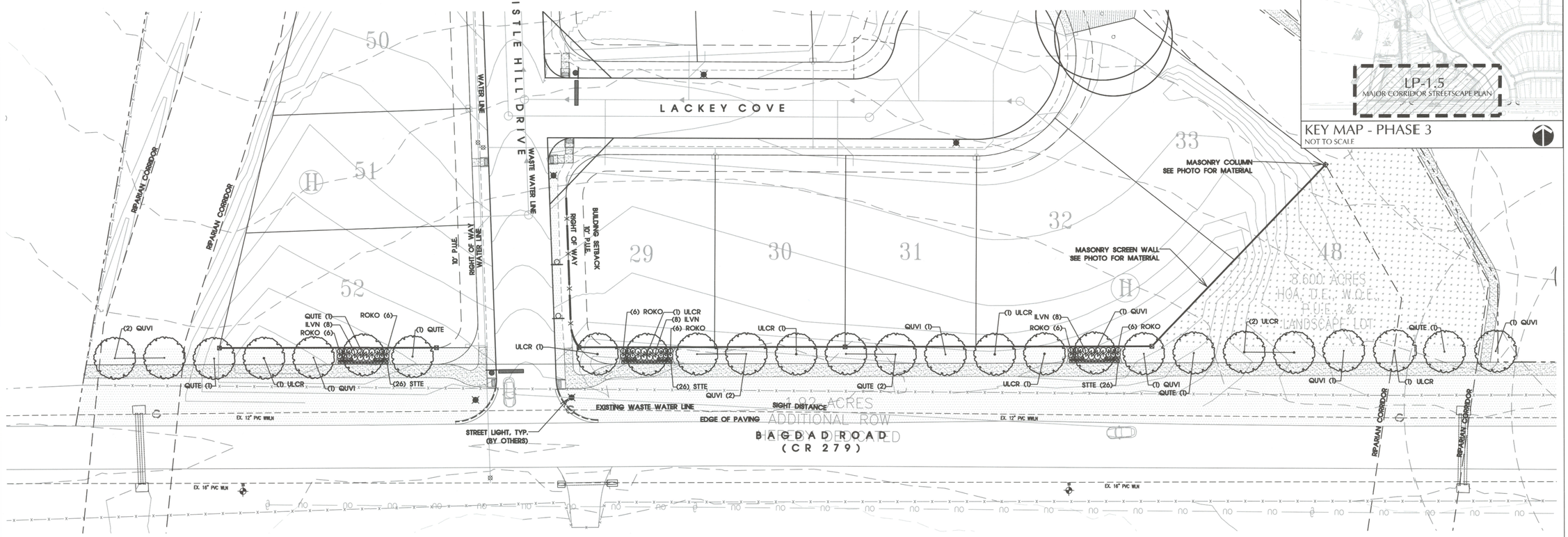

A MAJOR CORRIDOR STREETSCAPE PLAN - BAGDAD RD (CR 279)

SCALE: 1"=30'

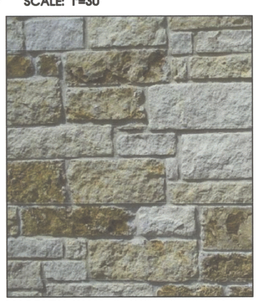
MASONRY WALL & COLUMN MATERIAL
CAVE ROCK LIMESTONE

MASONRY WALL & COLUMN MATERIAL
CAVE ROCK LIMESTONE - EXAMPLE

ULCR - CEDAR ELM
ULMUS CRASSIFOLIA

QUVI - SOUTHERN LIVE OAK
QUERCUS VIRGINIANA

QUTE - TEXAS RED OAK
QUERCUS TEXANA

ILVN - DWARF YAUPON HOLLY
ILEX VOMITORIA

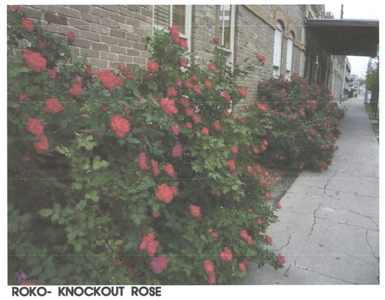
ROKO- KNOCKOUT ROSE
ROSA X KNOCKOUT

STTE- MEXICAN FEATHERGRASS
STIPA TENUISSIMA

KEY MAP - PHASE 3
NOT TO SCALE

FULL SIZE SCALE: 1" = 30'
0 15 30 60 NORTH

CITY OF LEANDER APPROVAL

SEC Planning, LLC
Austin, Texas
LAND PLANNING
LANDSCAPE ARCHITECTURE
COMMUNITY BRANDING
4201 W. Parmer Lane, Bldg A 220
Austin, TX 78727
T 512.246.7003
F 512.246.7783
www.secplanning.com
Email : info@secplanning.com

OWNER:
GEHAN HOMES
Barton Creek Plaza III
3815 Capital of Texas Hwy, Suite 275
Austin, TX 78704
T 512.330.9366
F 512.330.9755

REGISTERED LANDSCAPE ARCHITECT
BENEDICT P. DEBELLIS
2890
STATE OF TEXAS
07/30/2020

HOMESTEAD
PHASE THREE
LANDSCAPE DEVELOPMENT PLANS
LEANDER, TEXAS

Drawing File Name
T:\190006-GEHAN\Cadfiles\LA\Phase 3\LPX Base Phase 3.dwg

Issued:
1. CITY SUBMITTAL 02/26/2020
2. CITY RE-SUBMITTAL 05/11/2020
3. CITY RE-SUBMITTAL 07/30/2020
4.
5.

Revisions:
1.
2.
3.
4.
5.

Issue Date: 07/30/2020

Drawn By: NK
Reviewed By: BD

Project No.
190006.03-GEHAN

MAJOR CORRIDOR STREETSCAPE PLAN

Sheet No.
LP-1.5 59 OF 61

The reproduction, copying or other use of this drawing without the written consent of SEC Planning, LLC is prohibited.
© 2020
SEC Planning, LLC

CITY CASE # 20-PICP-011

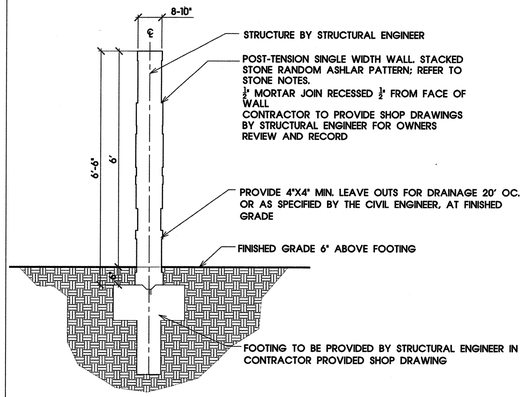

NOTES:
1. MORTAR ON EXTERIOR JOINTS TO MATCH STONE COLOR.
2. CONTRACTOR TO PROVIDE FOOTING AND INTERNAL STRUCTURE DETAILS, SEALED BY A LICENSED STRUCTURAL ENGINEER.
3. CONTRACTOR SHALL PROVIDE 4'X4' MOCKUP OF WALL BLOCK AND COLUMN VENEER FOR APPROVAL
4. PROVIDE 4X8 SCUPPERS FOR DRAINAGE AS NEEDED.

1 POST-TENSION MASONRY WALL

SCALE: 1/2" = 1'-0"

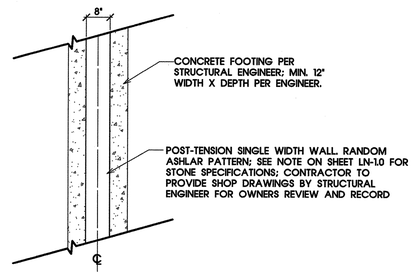

2 MASONRY WALL PLAN SECTION

SCALE: 1/2" = 1'-0"

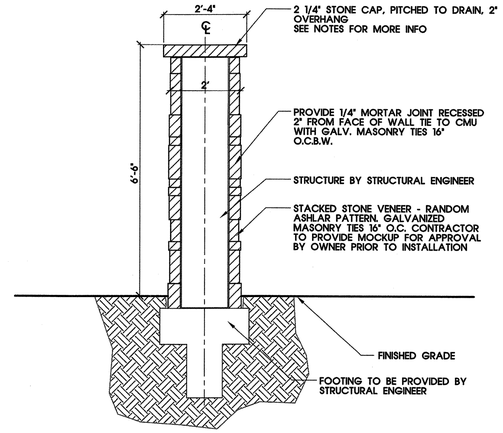

3 WALL COLUMN SECTION

SCALE: 1/2" = 1'-0"

STONE NOTES:

POST TENSION MASONRY WALL
TYPE: CAVE ROCK LIMESTONE
CUT: RANDOM ASHLAR PATTERN
SUPPLIER: COBRA STONE (512.746.5600)

STONE COLUMN
TYPE: CAVE ROCK LIMESTONE
CUT: RANDOM ASHLAR PATTERN
CAP: 2-1/4" LIMESTONE LUEDERS CAP
SAWN ALL SIDES, HAMMERED EDGE
CAP COLOR: CREAM
SUPPLIER: COBRA STONE (512.746.5600)

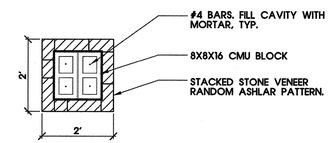

4 WALL COLUMN PLAN SECTION

SCALE: 1/2" = 1'-0"

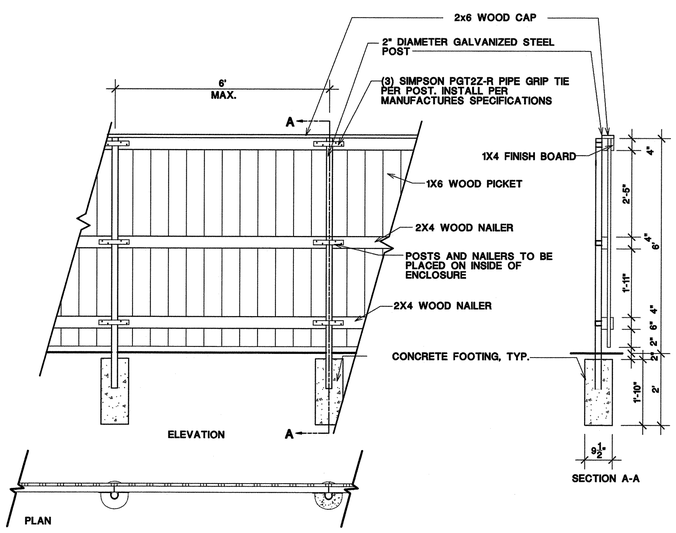

NOTE: ALL WOOD SHALL BE GRADE A - REDWOOD, CEDAR OR PRESURE TREATED, STAINED AND CAPPED. COLOR TO BE SELECTED BY OWNER.

5 WOOD FENCE - STAINED AND CAPPED

SCALE: 1/2" = 1'-0"

CITY OF LEANDER APPROVAL

SEC Planning, LLC
Austin, Texas
LAND PLANNING
LANDSCAPE ARCHITECTURE
COMMUNITY BRANDING
4201 W. Parmer Lane, Bldg A 220
Austin, TX 78727
T 512.246.7003
F 512.246.7703
www.secplanning.com
Email : info@secplanning.com

OWNER:
GEHAN HOMES
Barton Creek Plaza III
3815 Capital of Texas Hwy, Suite 275
Austin, TX 78704
T 512.330.9366
F 512.330.9755

07/30/2020

HOMESTEAD
PHASE THREE
LANDSCAPE DEVELOPMENT PLANS
LEANDER, TEXAS

Drawing File Name
T:\190006-GEHAN\Cadfiles\LA\Phase 3\Sheets\LP-D1.dwg

Issued:
1. CITY SUBMITTAL 02/26/2020
2. CITY RE-SUBMITTAL 05/11/2020
3. CITY RE-SUBMITTAL 07/30/2020
4.
5.

Revisions:
1.
2.
3.
4.
5.

Issue Date: 07/30/2020

Drawn By: NK
Reviewed By: BD

Project No.
190006.03-GEHAN

HARDSCAPE DETAILS

Sheet No.
LP-D1 60 OF 61

The reproduction, copying or other use of this drawing without the written consent of SEC Planning, LLC is prohibited.
© 2020
SEC Planning, LLC

CITY CASE # 20-PICP-011

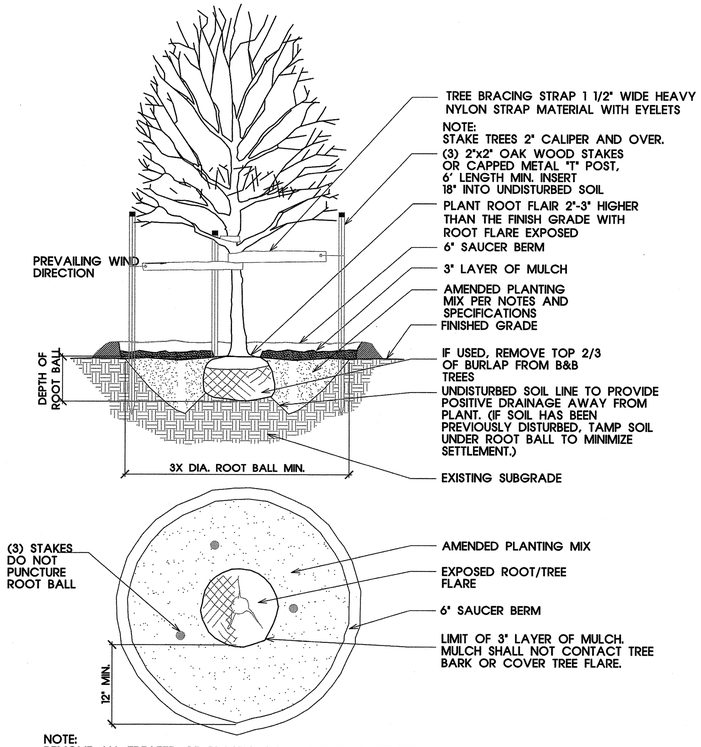

NOTE:
REMOVE ALL TREATED OR PLASTIC COATED BURLAP, STRAPPING, WIRE OR NYLON TWINE FROM ROOT BALL. AFTER SETTING IN HOLE, CUT AWAY TOP AND SIDES OF WIRE BASKET AND REMOVE IF ANY. ANY BROKEN OR CRUMBLING ROOTBALL WILL BE REJECTED. REMOVING THE WIRE WILL NOT BE AN EXCUSE FOR DAMAGE ROOTBALLS.

1 TREE PLANTING
SCALE: N.T.S.

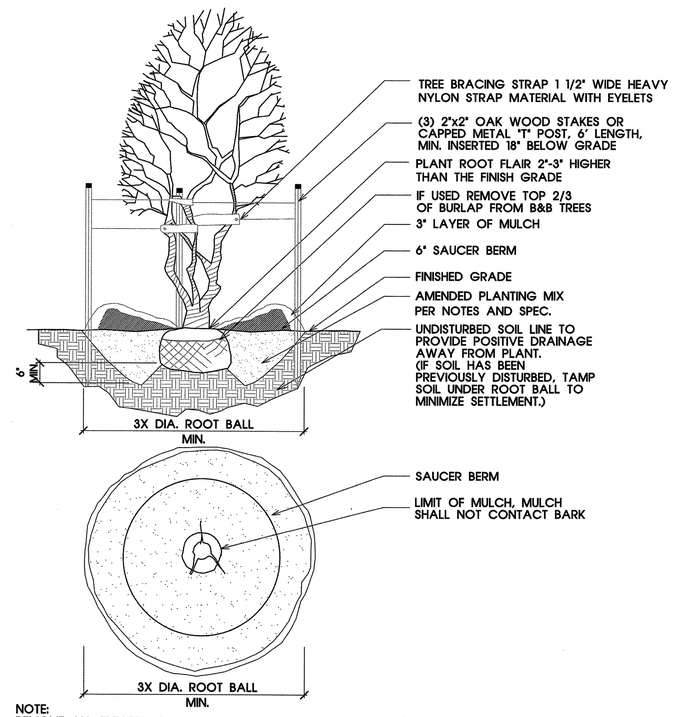

NOTE:
REMOVE ALL TREATED OR PLASTIC COATED BURLAP, STRAPPING, WIRE OR NYLON TWINE FROM ROOT BALL. AFTER SETTING IN HOLE, CUT AWAY TOP AND SIDES OF WIRE BASKET AND REMOVE IF ANY. ANY BROKEN OR CRUMBLING ROOTBALL WILL BE REJECTED. REMOVING THE WIRE WILL NOT BE AN EXCUSE FOR DAMAGE ROOTBALLS.

2 TREE PLANTING - MULTISTEM
SCALE: N.T.S.

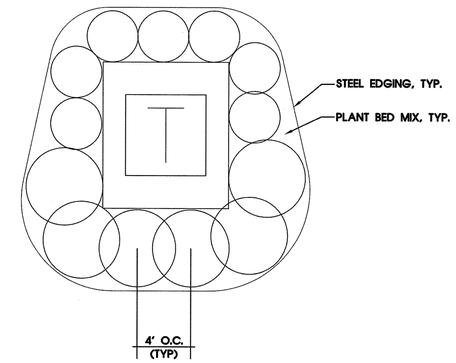

NOTE:
(1) LARGE SCREENING SHRUB SHALL BE PLANTED EVERY (4) LINEAR FEET AROUND THE BOUNDARY OF ALL GROUND-MOUNTED EQUIPMENT.
LARGE SCREENING SHRUBS SHALL BE EVERGREEN, MIN. 3' TALL WITHIN 2 YEARS, AND CONSISTENT WITH THE PLANT PALETTE PROVIDED ON SHEET LN-2. SHRUBS SHALL BE ARRANGED IN A LAYOUT THAT ALLOWS ACCESS TO THE EQUIPMENT'S ACCESS PANEL.

3 SCREENING SHRUBS AT TRANSFORMERS
SCALE: N.T.S.

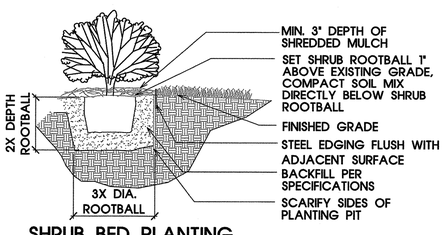

4 SHRUB BED PLANTING
SCALE: N.T.S.

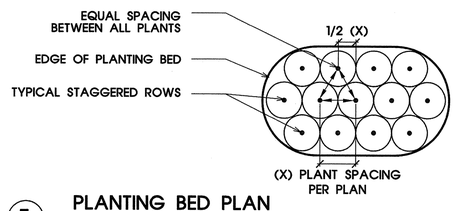

5 PLANTING BED PLAN
SCALE: N.T.S.

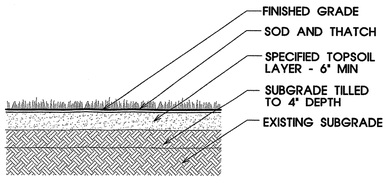

6 TURF SOD AREAS-CITY OF LEANDER
SCALE: N.T.S.

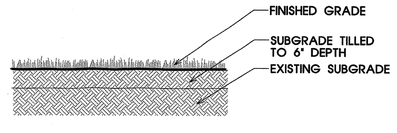

7 ENHANCED NATIVE TURF/ SEED AREAS
SCALE: N.T.S.

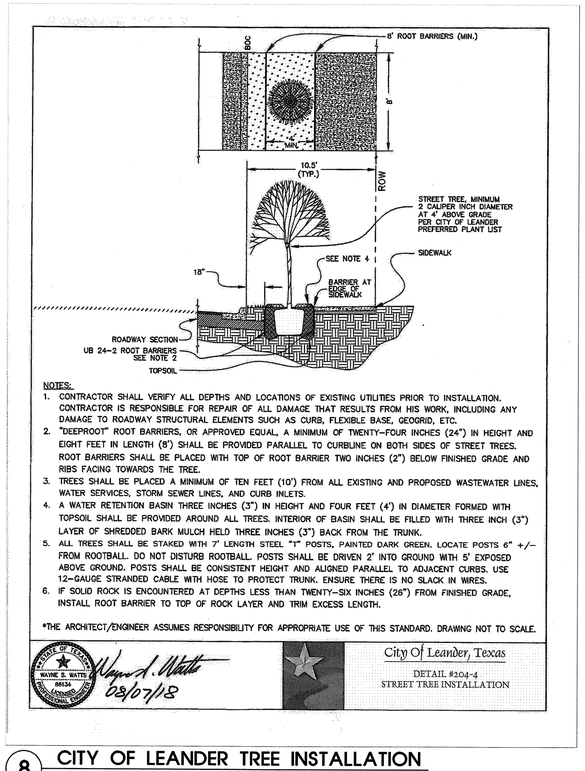

8 CITY OF LEANDER TREE INSTALLATION
SCALE: N.T.S.

CITY OF LEANDER APPROVAL

SEC Planning, LLC
Austin, Texas
LAND PLANNING
LANDSCAPE ARCHITECTURE
COMMUNITY BRANDING
4201 W. Parmer Lane, Bldg A 220
Austin, TX 78727
T 512.246.7003
F 512.246.7703
www.secplanning.com
Email : info@secplanning.com

OWNER:
GEHAN HOMES
Barton Creek Plaza III
3815 Capital of Texas Hwy, Suite 275
Austin, TX 78704
T 512.330.9366
F 512.330.9755

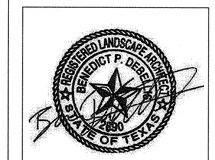

07/30/2020

HOMESTEAD
PHASE THREE
LANDSCAPE DEVELOPMENT PLANS
LEANDER, TEXAS

Drawing File Name
T:\190006-GEHAN\Cadfiles\LLA\Phase 3\Sheets\LP-D2.dwg

Issued:
1. CITY SUBMITTAL 02/26/2020
2. CITY RE-SUBMITTAL 05/11/2020
3. CITY RE-SUBMITTAL 07/30/2020
4.
5.

Revisions:
1.
2.
3.
4.
5.

Issue Date: 07/30/2020

Drawn By: NK
Reviewed By: BD

Project No.
190006.03-GEHAN

PLANTING DETAILS

Sheet No.
LP-D2 61 OF 61

The reproduction, copying or other use of this drawing without the written consent of SEC Planning, LLC is prohibited.
© 2020
SEC Planning, LLC

CITY CASE # 20-PICP-011

HOMESTEAD
PHASE 3
PUBLIC IMPROVEMENT CONSTRUCTION PLANS
PROJECT NO. 20-PICP-011

SUBMITTED BY:

8-10-20

CARLSON, BRIGANCE & DOERING, INC. DATE

APPROVED BY:

WAYNE S. WATTS, P.E., CFM, CITY ENGINEER DATE
CITY OF LEANDER, TEXAS

APPROVED BY:

ROBIN M. GRIFFIN, AICP, PLANNING DIRECTOR DATE
CITY OF LEANDER, TEXAS

APPROVED BY:

MARK TUMMONS, DIRECTOR OF PARKS AND RECREATION DATE
CITY OF LEANDER, TEXAS

APPROVED BY:

GINA ELLISON, P.E., PUBLIC WORKS DIRECTOR DATE
CITY OF LEANDER, TEXAS

APPROVED BY:

CHIEF JOSHUA DAVIS, FIRE MARSHAL DATE
CITY OF LEANDER, TEXAS

GENERAL NOTES:

1. ALL EASEMENTS ON PRIVATE PROPERTY SHALL BE MAINTAINED BY THE PROPERTY OWNER OR HIS OR HER ASSIGNS.
2. THE HOA WILL OWN AND MAINTAIN THE FOLLOWING LOTS:

   BLOCK I, LOTS 4
   BLOCK H, LOTS 47 & 48
3. THE HOMEOWNERS ASSOCIATION IS REQUIRED TO MOW AND MAINTAIN LANDSCAPING IN THE OPEN CHANNELS, DETENTION AND WATER QUALITY AREAS.
4. THE CITY ACCEPTS AND MAINTAINS DRAINAGE AND WATER QUALITY IMPROVEMENTS CONTAINED IN OPEN CHANNELS, DETENTION AND WATER QUALITY AREAS. THE CITY WILL ALSO ACCEPT AND MAINTAIN WATER, WASTEWATER AND STREETS.

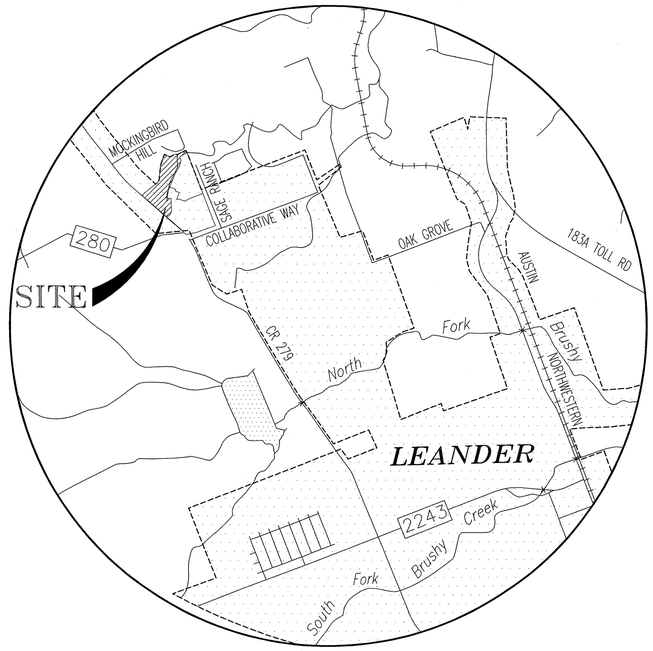

LOCATION MAP
1"=2000'

Sheet Number	Sheet Title
1	COVER SHEET
2	GENERAL NOTES
3	PLAT (SHEET 1 & 2)
4	PLAT (SHEET 3)
5	PRELIMINARY PLAT
6	EXISTING FLOODPLAIN
7	PROPOSED FLOODPLAIN
8	EROSION CONTROL PLAN
9	TREE LIST
10	EROSION CONTROL DETAILS & NOTES
11	THISTLE HILL DRIVE (0+00 TO 5+00)
12	THISTLE HILL DRIVE (5+00 TO 9+50)
13	THISTLE HILL DRIVE (9+50 TO END)
14	LACKEY COVE (0+00 TO END)
15	OVERALL DRAINAGE PLAN
16	DRAINAGE AREA AND CALCULATIONS PLAN
17	AREA GRADING PLAN
18	STORM SEWER LINE 'A' (0+00 to 7+00)
19	STORM SEWER LINE 'A' (7+00 to END)
20	STORM SEWER LINE 'B' & 'C' (0+00 to END)
21	STORM SEWER LATERALS
22	WATER QUALITY - POND B
23	WATER QUALITY - POND B SECTIONS
24	WATER QUALITY - POND DETAILS
25	ELECTICAL NOTES SYMBOLS & ABBREIVATIONS
26	ELECTRICAL SPECIFICATIONS
27	ELECTRICAL OVERALL SITE PLAN
28	ELECTRICAL SITE PLAN-NEW BATCH POND 1
29	ELECTRICAL LADDER DIAGRAM
30	ELECTRICAL DETAILS
31	WATER DISTRIBUTION PLAN
32	OVERALL WASTEWATER COLLECTION PLAN
33	WASTEWATER LINE 'A' PLAN & PROFILE (0+00 TO END)
34	WASTEWATER LINE 'B' & 'C' PLAN & PROFILE (0+00 TO END)
35	WASTEWATER LINE 'D' PLAN & PROFILE (0+00 TO END)
36	TRAFFIC CONTROL PLAN
37	TRAFFIC CONTROL PLAN & TXDOT DETAILS
38	LIGHTING STREET SIGNAGE STRIPING & SIDEWALK PLAN
39	STANDARD CONSTRUCTION DETAILS (1 OF 3)
40	STANDARD CONSTRUCTION DETAILS (2 OF 3)
41	STANDARD CONSTRUCTION DETAILS (3 OF 3)
42	STANDARD WATER & WASTEWATER DETAILS (1 OF 2)
43	STANDARD WATER & WASTEWATER DETAILS (2 OF 2)
44	(E1.0) ELECTRICAL NOTES SYMBOLS & ABBREVIATIONS
45	(E1.1) ELECTRICAL SPECIFICATIONS
46	(E2.0) ELECTRICAL SITE LIGHTING PLAN
47	(E3.0) ELECTRICAL DETAILS
48	(E4.0) SITE LIGHTING PHOTOMETRICS PLAN
49	(E5.0) RESIDENTIAL ROADWAY LIGHTING STANDARDS
50	(E5.1) RESIDENTIAL ROADWAY LIGHTING STANDARDS
51	(E5.2) RESIDENTIAL ROADWAY LIGHTING STANDARDS
52	(LN-1) CONSTRUCTION-PLANTING NOTES
53	(LP-NI)LANDSCAPE NOTES PLAN SCHEDULE
54	(LP-1.0) OVERALL LAYOUT PLAN
55	(LP-1.1) PLANTING PLAN
56	(LP-1.2) PLANTING PLAN
57	(LP-1.3) PLANTING PLAN
58	(LP-1.4) PLANTING PLAN
59	(LP-1.5) MAIJOR CORRIDOR STREETSCAPE PLAN
60	(LP-D1) HARDSCAPE DETAILS
61	(LP-D2) PLANTING DETAILS

INITIAL SUBMITTAL DATE: 03/24/2020

OWNER & DEVELOPER:
GEHAN HOMES, LTD.
3815 S. CAPITAL OF TEXAS HIGHWAY
SUITE 275
AUSTIN, TEXAS 78704
(512) 330-9366 PHONE
(512) 900-2934 FAX

ENGINEER & SURVEYOR:
CARLSON, BRIGANCE & DOERING, INC.
5501 WEST WILLIAM CANNON DRIVE
AUSTIN, TEXAS 78749
PHONE: (512) 280-5160
FAX: (512) 280-5165

LEGAL DESCRIPTION:
HOMESTEAD, PHASE 3
WILLIAMSON COUNTY, TEXAS

TOTAL ACREAGE: 18.21 ACRES
SURVEY: CHARLES COCHRAN SURVEY, ABSTRACT NO. 134

SITE LOCATION:
THIS SUBDIVISION IS CONTAINED WITHIN THE CURRENT CORPORATE LIMITS OF THE CITY OF LEANDER, TEXAS AND IS IS SUBJECT TO THE CITY OF LEANDER SUBDIVISION ORDINANCE.

FEMA:
NO PORTION OF THIS TRACT IS LOCATED WITHIN A FLOOD HAZARD AREA AS SHOWN ON THE FLOOD INSURANCE RATE MAP PANEL # 48491C 0435E, FOR WILLIAMSON COUNTY, EFFECTIVE SEPTEMBER 26, 2008.

REVISION #	DESCRIPTION	APPROVAL

FOR CITY OF LEANDER USE

20-PICP-011

DESIGNED BY:	DRAFTED BY:
LAW	ZHL & CMC

REVISION	DATE
INITIAL SUBMITTAL	03.24.20
UPDATE #1 SUBMITTAL	05.18.20
UPDATE #2 SUBMITTAL	07.28.20

Carlson, Brigance & Doering, Inc.
Civil Engineering ◆ Surveying
FIRM ID #F3791
Main Office
5501 West William Cannon Dr.
Austin, Texas 78749
Phone No. (512) 280-5160
North Office
12129 RR 620 N., Ste. 600
Austin, Texas 78750
Fax No. (512) 280-5165

SHEET NAME: COVER SHEET
JOB NAME: HOMESTEAD PHASE 3
PROJECT: STREET, DRAINAGE, WATER, AND WASTEWATER IMPROVEMENTS

8/10/2020
STATE OF TEXAS
LEE A. WHITED
102471
LICENSED PROFESSIONAL ENGINEER
CARLSON, BRIGANCE & DOERING, INC.
ID# F3791

DATE NOVEMBER 2019
JOB NUMBER 5172
SHEET 1 OF 61
SHEET NO. 1

FILE PATH:I:\AD\5172\dwg\5172-COVER.dwg - Aug 10, 2020 - 4:19pm