EDWARDS AQUIFER CONTRIBUTING ZONE PLAN EXCEPTION

CR 200
From Cap Metro Railroad to CR 201
Williamson County

Prepared for

Williamson County
3151 S. E. Inner Loop, Suite B
Georgetown, Texas 78626

WILLIAMSON COUNTY
1848

STATE OF TEXAS
ODALYS C. JOHNSON
104671
LICENSED
PROFESSIONAL ENGINEER

The seal appearing on this document was authorized by Odalys C. Johnson, PE., CFM 1014671 on August 7, 2020

August 7, 2020

JONES | CARTER

Texas Board of Professional Engineers Registration No. F-439
Texas Board of Professional Land Surveying Registration No. 10046102

1500 South Day Street, Brenham, Texas 77833-4569
Telephone 979.836.6631 Fax 979.836.5686

Contributing Zone Exception Request

- **Edwards Aquifer Application Cover Page (TCEQ-20705)**
- **Contributing Zone Exception Request Form (TCEQ-10262)**

  Attachment A - Road Map
  Attachment B - USGS Quadrangle Map
  Attachment C - Project Description
  Attachment D - Nature of Exception
  Attachment E - Equivalent Water Quality Protection

- **Storm Water Pollution Prevention Plan (SWPPP), if necessary**
- **Agent Authorization Form (TCEQ-0599)**
- **Application Fee Form (TCEQ-0574)**
- **Core Data Form (TCEQ-10400)**

Texas Commission on Environmental Quality

Edwards Aquifer Application Cover Page

Our Review of Your Application

The Edwards Aquifer Program staff conducts an administrative and technical review of all applications. The turnaround time for administrative review can be up to 30 days as outlined in 30 TAC 213.4(e). Generally administrative completeness is determined during the intake meeting or within a few days of receipt. The turnaround time for technical review of an administratively complete Edwards Aquifer application is 90 days as outlined in 30 TAC 213.4(e). Please know that the review and approval time is directly impacted by the quality and completeness of the initial application that is received. In order to conduct a timely review, it is imperative that the information provided in an Edwards Aquifer application include final plans, be accurate, complete, and in compliance with 30 TAC 213.

Administrative Review

1. Edwards Aquifer applications must be deemed administratively complete before a technical review can begin. To be considered administratively complete, the application must contain completed forms and attachments, provide the requested information, and meet all the site plan requirements. The submitted application and plan sheets should be final plans. Please submit one full-size set of plan sheets with the original application, and half-size sets with the additional copies.

   To ensure that all applicable documents are included in the application, the program has developed tools to guide you and web pages to provide all forms, checklists, and guidance. Please visit the below website for assistance: http://www.tceq.texas.gov/field/eapp.

2. This Edwards Aquifer Application Cover Page form (certified by the applicant or agent) must be included in the application and brought to the administrative review meeting.

3. Administrative reviews are scheduled with program staff who will conduct the review. Applicants or their authorized agent should call the appropriate regional office, according to the county in which the project is located, to schedule a review. The average meeting time is one hour.

4. In the meeting, the application is examined for administrative completeness. Deficiencies will be noted by staff and emailed or faxed to the applicant and authorized agent at the end of the meeting, or shortly after. Administrative deficiencies will cause the application to be deemed incomplete and returned.

   An appointment should be made to resubmit the application. The application is re-examined to ensure all deficiencies are resolved. The application will only be deemed administratively complete when all administrative deficiencies are addressed.

5. If an application is received by mail, courier service, or otherwise submitted without a review meeting, the administrative review will be conducted within 30 days. The applicant and agent will be contacted with the results of the administrative review. If the application is found to be administratively incomplete, it can be retrieved from the regional office or returned by regular mail. If returned by mail, the regional office may require arrangements for return shipping.

6. If the geologic assessment was completed before October 1, 2004 and the site contains "possibly sensitive" features, the assessment must be updated in accordance with the *Instructions to Geologists* (TCEQ-0585 Instructions).

Technical Review

1. When an application is deemed administratively complete, the technical review period begins. The regional office will distribute copies of the application to the identified affected city, county, and groundwater conservation district whose jurisdiction includes the subject site. These entities and the public have 30 days to provide comments on the application to the regional office. All comments received are reviewed by TCEQ.

2. A site assessment is usually conducted as part of the technical review, to evaluate the geologic assessment and observe existing site conditions. The site must be accessible to our staff. The site boundaries should be

clearly marked, features identified in the geologic assessment should be flagged, roadways marked and the alignment of the Sewage Collection System and manholes should be staked at the time the application is submitted. If the site is not marked the application may be returned.

3. We evaluate the application for technical completeness and contact the applicant and agent via Notice of Deficiency (NOD) to request additional information and identify technical deficiencies. There are two deficiency response periods available to the applicant. There are 14 days to resolve deficiencies noted in the first NOD. If a second NOD is issued, there is an additional 14 days to resolve deficiencies. If the response to the second notice is not received, is incomplete or inadequate, or provides new information that is incomplete or inadequate, the application must be withdrawn or will be denied. Please note that because the technical review is underway, whether the application is withdrawn or denied **the application fee will be forfeited**.

4. The program has 90 calendar days to complete the technical review of the application. If the application is technically adequate, such that it complies with the Edwards Aquifer rules, and is protective of the Edwards Aquifer during and after construction, an approval letter will be issued. Construction or other regulated activity may not begin until an approval is issued.

Mid-Review Modifications

It is important to have final site plans prior to beginning the permitting process with TCEQ to avoid delays.

Occasionally, circumstances arise where you may have significant design and/or site plan changes after your Edwards Aquifer application has been deemed administratively complete by TCEQ. This is considered a "Mid-Review Modification". Mid-Review Modifications may require redistribution of an application that includes the proposed modifications for public comment.

If you are proposing a Mid-Review Modification, two options are available:

- If the technical review has begun your application can be denied/withdrawn, your fees will be forfeited, and the plan will have to be resubmitted.
- TCEQ can continue the technical review of the application as it was submitted, and a modification application can be submitted at a later time.

If the application is denied/withdrawn, the resubmitted application will be subject to the administrative and technical review processes and will be treated as a new application. The application will be redistributed to the affected jurisdictions.

Please contact the regional office if you have questions. If your project is located in Williamson, Travis, or Hays County, contact TCEQ's Austin Regional Office at 512-339-2929. If your project is in Comal, Bexar, Medina, Uvalde, or Kinney County, contact TCEQ's San Antonio Regional Office at 210-490-3096

Please fill out all required fields below and submit with your application.

1. Regulated Entity Name: CR 200 from Cap Metro RR to CR 201					**2. Regulated Entity No.:**			
3. Customer Name: Williamson County					**4. Customer No.:** CN600897888			
5. Project Type: **(Please circle/check one)**	New		Modification		Extension		Exception	Reconstruction
6. Plan Type: **(Please circle/check one)**	WPAP	CZP	SCS	UST	AST	EXP	EXT	Technical Clarification	Optional Enhanced Measures
7. Land Use: **(Please circle/check one)**	Residential		Non-residential			**8. Site (acres):**		
9. Application Fee:			**10. Permanent BMP(s):**			Vegetative Filter Strips		
11. SCS (Linear Ft.):	N/A		**12. AST/UST (No. Tanks):**			N/A		
13. County:	Williamson		**14. Watershed:**			South Fork San Gabriel River		

Application Distribution

Instructions: Use the table below to determine the number of applications required. One original and one copy of the application, plus additional copies (as needed) for each affected incorporated city, county, and groundwater conservation district are required. Linear projects or large projects, which cross into multiple jurisdictions, can require additional copies. Refer to the "Texas Groundwater Conservation Districts within the EAPP Boundaries" map found at:

http://www.tceq.texas.gov/assets/public/compliance/field_ops/eapp/EAPP%20GWCD%20map.pdf

For more detailed boundaries, please contact the conservation district directly.

Austin Region			
County:	**Hays**	**Travis**	**Williamson**
Original (1 req.)	__	__	x
Region (1 req.)	__	__	x
County(ies)	__	__	x
Groundwater Conservation District(s)	__Edwards Aquifer Authority __Barton Springs/ Edwards Aquifer __Hays Trinity __Plum Creek	__Barton Springs/ Edwards Aquifer	NA
City(ies) Jurisdiction	__Austin __Buda __Dripping Springs __Kyle __Mountain City __San Marcos __Wimberley __Woodcreek	__Austin __Bee Cave __Pflugerville __Rollingwood __Round Rock __Sunset Valley __West Lake Hills	__Austin __Cedar Park __Florence __Georgetown __Jerrell __Leander __Liberty Hill __Pflugerville __Round Rock

San Antonio Region					
County:	**Bexar**	**Comal**	**Kinney**	**Medina**	**Uvalde**
Original (1 req.)	__	__	__	__	__
Region (1 req.)	__	__	__	__	__
County(ies)	__	__	__	__	__
Groundwater Conservation District(s)	__ Edwards Aquifer Authority __Trinity-Glen Rose	__Edwards Aquifer Authority	__Kinney	__EAA __Medina	__EAA __Uvalde
City(ies) Jurisdiction	__Castle Hills __Fair Oaks Ranch __Helotes __Hill Country Village __Hollywood Park __San Antonio (SAWS) __Shavano Park	__Bulverde __Fair Oaks Ranch __Garden Ridge __New Braunfels __Schertz	NA	__San Antonio ETJ (SAWS)	NA

I certify that to the best of my knowledge, that the application is complete and accurate. This application is hereby submitted to TCEQ for administrative review and technical review. Odalys C. Johnson, P.E., C.F.M.
Print Name of Customer/Authorized Agent
09/08/2020
Signature of Customer/Authorized Agent Date

FOR TCEQ INTERNAL USE ONLY			
Date(s)Reviewed:		Date Administratively Complete:	
Received From:		Correct Number of Copies:	
Received By:		Distribution Date:	
EAPP File Number:		Complex:	
Admin. Review(s) (No.):		No. AR Rounds:	
Delinquent Fees (Y/N):		Review Time Spent:	
Lat./Long. Verified:		SOS Customer Verification:	
Agent Authorization Complete/Notarized (Y/N):		Fee Check:	Payable to TCEQ (Y/N):
Core Data Form Complete (Y/N):			Signed (Y/N):
Core Data Form Incomplete Nos.:			Less than 90 days old (Y/N):

Contributing Zone Exception Request Form

Texas Commission on Environmental Quality

for Regulated Activities on the Contributing Zone to the Edwards Aquifer and Relating to 30 TAC §213.24(1), Effective June 1, 1999

To ensure that the application is administratively complete, confirm that all fields in the form are complete, verify that all requested information is provided, consistently reference the same site and contact person in all forms in the application, and ensure forms are signed by the appropriate party.

Note: Including all the information requested in the form and attachments contributes to more streamlined technical reviews.

Signature

To the best of my knowledge, the responses to this form accurately reflect all information requested concerning the proposed regulated activities and methods to protect the Edwards Aquifer. This **Contributing Zone Exception Request Form** is hereby submitted for TCEQ review and executive director approval. The request was prepared by:

Print Name of Customer/Agent: Odalys C. Johnson, P.E., C.F.M.

Date: 09/08/2020

Signature of Customer/Agent:

_____

Regulated Entity Name: CR 200 approximately from Stage Coach to CR 201

Project Information

1. County: Williamson
2. Stream Basin: South Fork San Gabriel River
3. Groundwater Conservation District (if applicable): n/a
4. Customer (Applicant):

   Contact Person: Terron Evertson, P.E.
   Entity: Williamson County
   Mailing Address: 3151 S. E. Inner Loop, Suite B
   City, State: Georgetown, Texas Zip: 78726
   Telephone: 512-943-3330 Fax: 512-943-3335
   Email Address: roads@wilco.org

5. Agent/Representative (If any):

Contact Person: Odalys C. Johnson, P.E., C.F.M.
Entity: Jones|Carter
Mailing Address: 3100 ALvin Devane Bolulevard
City, State: Austin, Texas Zip: 78741
Telephone: 514-441-9493 Fax: _____
Email Address: ojohnson@jonescarter.com

6. Project Location

☐ This project is inside the city limits of _____.
☒ This project is outside the city limits but inside the ETJ (extra-territorial jurisdiction) of Liberty Hill.
☐ This project is not located within any city limits or ETJ.

7. ☒ The location of the project site is described below. Sufficient detail and clarity has been provided so that the TCEQ's Regional staff can easily locate the project and site boundaries for a field investigation.

Project extends approximately 1,000 ft from Stage Coach to CR 201

8. ☒ **Attachment A - Road Map**. A road map showing directions to and location of the project site is attached. The map clearly shows the boundary of the project site.

9. ☒ **Attachment B - USGS Quadrangle Map**. A copy of the USGS Quadrangle Map (Scale: 1" = 2000') is attached. The map(s) should clearly show:

☒ Project site boundaries.
☒ USGS Quadrangle Name(s).

10. ☒ **Attachment C - Project Narrative**. A detailed narrative description of the proposed project is provided at the end of this form. The project description is consistent throughout the application and contains, at a minimum, the following details:

☒ Area of the site
☒ Offsite areas
☒ Impervious cover
☒ Permanent BMP(s)
☒ Proposed site use
☒ Site history
☒ Previous development
☒ Area(s) to be demolished

11. Existing project site conditions are noted below:

☐ Existing commercial site
☐ Existing industrial site
☐ Existing residential site
☒ Existing paved and/or unpaved roads

☐ Undeveloped (Cleared)
☐ Undeveloped (Undisturbed/Not cleared)
☐ Other: _____

12. ☒ **Attachment D - Nature Of Exception**. A narrative description of the nature of each exception requested is attached. All provisions of 30 TAC §213 Subchapter B for which an exception is being requested have been identified in the description.

13. ☒ **Attachment E - Equivalent Water Quality Protection**. Documentation demonstrating equivalent water quality protection for surface streams which enter the Edwards Aquifer is attached.

Administrative Information

14. ☒ Submit one (1) original and one (1) copy of the application, plus additional copies as needed for each affected incorporated city, groundwater conservation district, and county in which the project will be located. The TCEQ will distribute the additional copies to these jurisdictions.

15. ☒ The applicant understands that prior approval under this section must be obtained from the executive director for the exception to be authorized.

WILLIAMSON COUNTY, TEXAS
COUNTY ROAD 200 WA4a & WA4b
ROADWAY AND DRAINAGE IMPROVEMENTS
APRIL 2017

williamson
COUNTY
1848

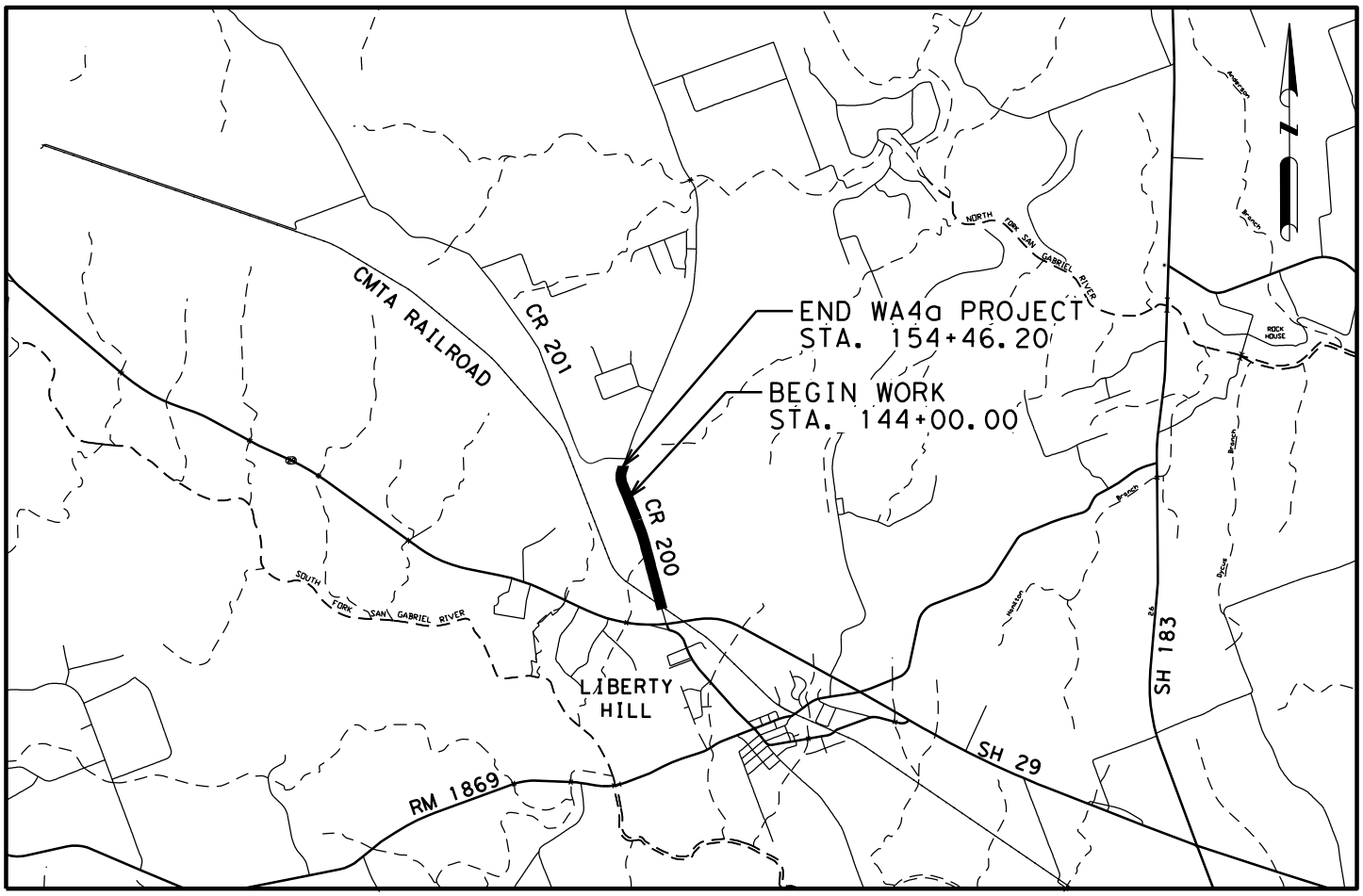

VICINITY MAP
NTS

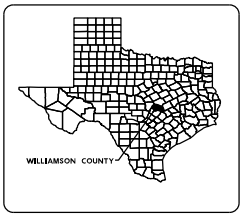

TEXAS COUNTY MAP
N.T.S.

PREPARED BY:

JONES|CARTER
Texas Board of Professional Engineers Registration No. F-439
6330 West Loop South, Suite 150 • Bellaire, Texas 77401 • 713.777.5337

CONTRIBUTING ZONE PLAN APPLICATION
FOR REGULATED ACTIVITIES ON THE
EDWARDS AQUIFER CONTRIBUTING ZONE

ATTACHMENT A
ROAD MAP

WILLIAMSON COUNTY 1848

OWNER:
WILLIAMSON COUNTY, TEXAS
c/o JUDGE
WILLIAMSON COUNTY JUDGE

© 2017 by Williamson County, Texas.
All rights reserved.

A

8/7/2020 E:\OBES\CR 200\Documents\WA-4*CR201-BS\SHEETS\WPAP\CR200-wa4a-BDR-WPAP LOC MAP.dgn

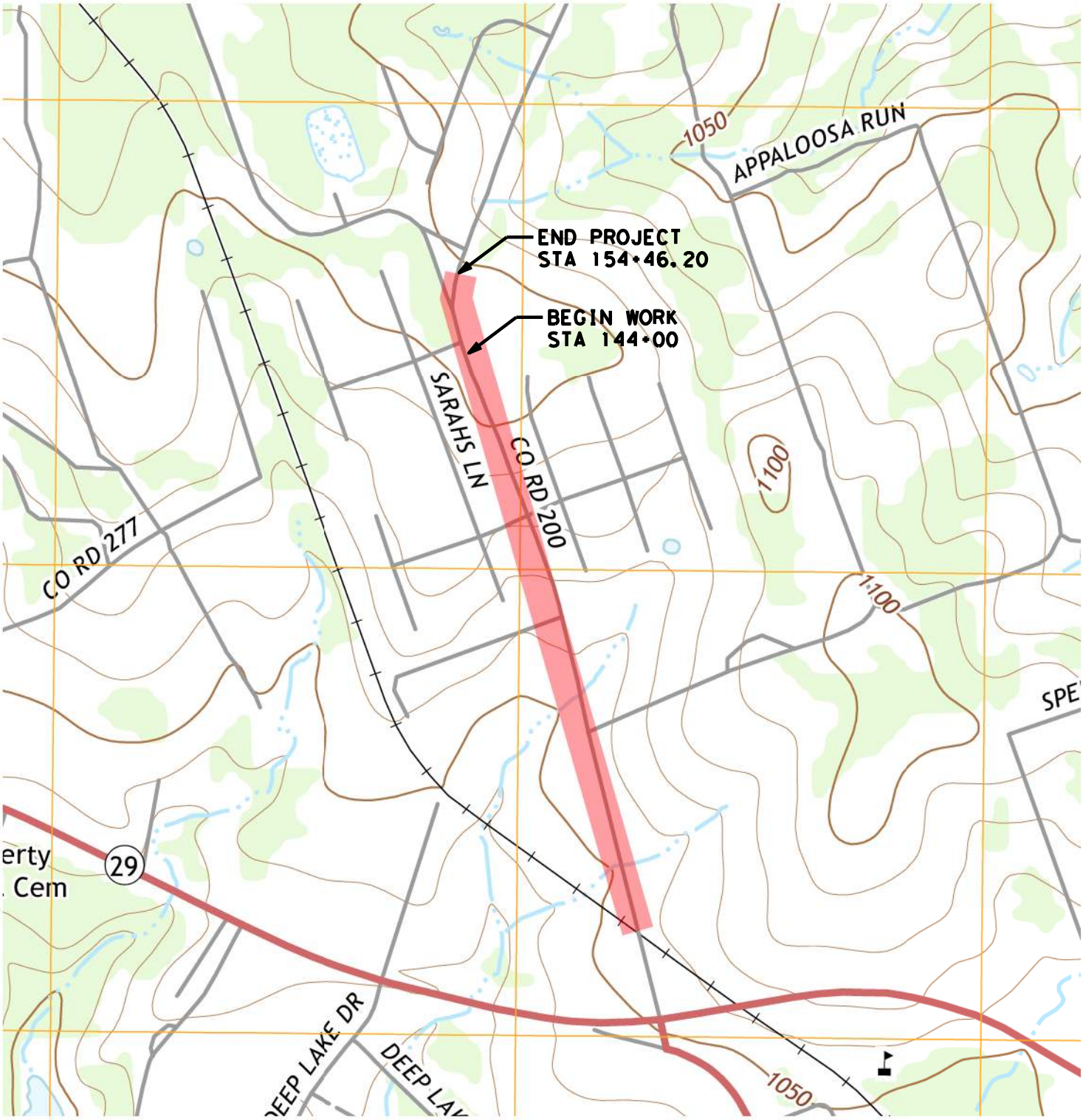

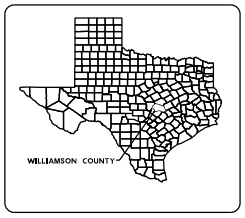

TEXAS COUNTY MAP
N.T.S.

USGS QUAD SCALE: 1:24 000
USGS QUAD NAME: LIBERTY HILL

PREPARED BY:

JONES|CARTER
Texas Board of Professional Engineers Registration No. F-439
6330 West Loop South, Suite 150 • Bellaire, Texas 77401 • 713.777.5337

CONTRIBUTING ZONE PLAN APPLICATION
FOR REGULATED ACTIVITIES ON THE
EDWARDS AQUIFER CONTRIBUTING ZONE

ATTACHMENT B
USGS QUADRANGLE MAP

WILLIAMSON COUNTY
1848

OWNER:
WILLIAMSON COUNTY, TEXAS
c/o JUDGE
WILLIAMSON COUNTY JUDGE

© 2017 by Williamson County, Texas.
All rights reserved.

B

8/7/2020 E:\OBES\CR 200\Documents\WA-4-CR201-BS\SHEETS\WPAP\CR200-wa4g-WPAP QUAD MAP.dgn

CONTRIBUTING ZONE EXCEPTION REQUEST FORM
ATTACHMENT C-PROJECT DESCRIPTION

Williamson County is proposing to extend the reconstruction of the segment of CR 200 (project ID No. 11001898) approximately 1,000 feet from just north of Stage Coach road to CR 201. The project is located within the City of Liberty Hill and the half mile extraterritorial jurisdiction (ETJ). It is also in the Edwards Aquifer Contributing Zone and Zone X of FEMA FIRM Panel 48491C0250E, effective September 26, 2008.

The existing CR 200 roadway along the project consists of two traveling lanes approximately 10 to 12-feet wide with no shoulders. The proposed roadway consists of two (2) new 12-foot travel lanes with 10-feet wide paved shoulders and a 14-feet wide center turn lane. The proposed roadway profile has slopes that range roughly between 0.5% and 3.0%. The section is crowned mostly along the centerline alignment with cross slopes at a constant 2% from the roadway crown to the east and west where generally, drainage will be filtered through 15-foot wide engineered vegetated filter strips and then collected into trapezoidal grass lined ditches. The proposed ditches drain towards two existing cross drain structures which convey flow east to west under CR 200 and ultimately to the South Fork of the San Gabriel River. These structures are proposed to be replaced with larger structures to accommodate the expected increase in discharges. The proposed pavement section consists of 12-inch thick flexible base material (in two equivalent lifts), four (4) inches of asphaltic surface material (HMACP Type B),~~)~~ and two (2) inches of asphaltic surface material (HMACP Type C). Paved driveways with cross drain structures are proposed where needed to provide access to adjacent properties.

Water treatment of the runoff affected by the total increase in impervious cover associated with this project is to be provided by the proposed vegetated filter strips design and approved under project No. 11001898. As described in that permit application, the existing and proposed impervious cover extending from the Cap Metro Railroad to Cr 201 are approximately 3.18ac and 6.53ac, respectively, the total area of impervious cover required to be treated is 2.98ac and the proposed area of impervious cover treated is 3.0ac.

CONTRIBUTING ZONE EXCEPTION REQUEST FORM
ATTACHMENT D-NATURE OF EXCEPTION

The new impervious cover and pollutant loads associated with this project were accounted for under the approved Edwards Aquifer Protection Plan ID No. 11001898. This project included stormwater best management practices for the reconstruction of CR 200 from the Cap Metro Railroad to CR 201.

As described in that permit application, the existing and proposed impervious cover extending from the Cap Metro Railroad to CR 201 are approximately 3.18ac and 6.53ac, respectively, the total area of impervious cover required to be treated is 2.98ac and the proposed area of impervious cover treated is 3.0ac. Below is a summary of the calculations.

PROJECT: CR-200
From Cap Metro Railroad to CR 201

Total project area=	13.75	ac	
Ex IC=	3.18	ac	
Proposed pavement width=	58.00	ft	
Prop. IC=	6.53	ac	Including ditch rip-rap
P=	32	in	For Williamson County
Required TSS load to be removed=	2912		See TCEQ calcs spreadsheet
Area of IC to treat for required load removal=	2.98	ac	See TCEQ calcs spreadsheet
Length of VFS required =	2239	ft	On each side of roadway
Proposed length to BMP on west side=	**2411**	**ft**	Approx from Sta 106+00 to Sta 127+00 (minus driveways) and from Sta 150+00 to Sta 153+50
Proposed length to BMP on east side=	**2841**	**ft**	Approx from Sta 106+00 to Sta 129+00 (minus driveways) And from Sta 137+50 to Sta 143+50
Area of IC treated=	**3.50**	**ac**	
Total area to BMP=	**6.63**	**ac**	ROW

TRANSITION ZONE EXCEPTION REQUEST FORM
ATTACHMENT E-EQUIVALENT WATER PROTECTION

Water quality protection for this project shall be provided by the VFS proposed and approved in the Contributing Zone Plan ID No. 11001898. A copy of the plan notice of approval is attached.

Jon Niermann, *Chairman*
Emily Lindley, *Commissioner*
Bobby Janecka, *Commissioner*
Toby Baker, *Executive Director*

TEXAS COMMISSION ON ENVIRONMENTAL QUALITY

Protecting Texas by Reducing and Preventing Pollution

March 16, 2020

Mr. Terron Evertson, P.E.
Williamson County
3151 SE Inner Loop, Suite B
Georgetown, Texas 78626

Re: Edwards Aquifer, Williamson County
CR 200 Cap Metro RR to CR 201; North of US Hwy. 29; Liberty Hill ETJ, Texas
Request for Approval of a Contributing Zone Plan (CZP)
30 Texas Administrative Code (TAC) Chapter 213 Subchapter B Edwards Aquifer
Edwards Aquifer Protection Program ID No. 11001898; RN104283916

Dear Mr. Evertson:

The Texas Commission on Environmental Quality (TCEQ) has completed its review of the CZP application for the above-referenced project submitted to the Austin Regional Office by Jones | Carter on behalf of Williamson County on January 17, 2020. As presented to the TCEQ, the Temporary and Permanent Best Management Practices (BMPs) and construction plans were prepared by a Texas licensed professional engineer to be in general compliance with the requirements of 30 TAC Chapter 213. These planning materials were sealed, signed and dated by a Texas licensed professional engineer. Therefore, based on the engineer's concurrence of compliance, the planning materials for construction of the proposed project and pollution abatement measures are hereby approved subject to applicable state rules and the conditions in this letter. The applicant or a person affected may file with the chief clerk a motion for reconsideration of the executive director's final action on this Edwards Aquifer Protection Plan. A motion for reconsideration must be filed no later than 23 days after the date of this approval letter. *This approval expires two (2) years from the date of this letter unless, prior to the expiration date, more than 10 percent of the construction has commenced on the project or an extension of time has been requested.*

PROJECT DESCRIPTION

The proposed expansion to the current roadway design consists of reconstructing CR 200 from Cap Metro Railroad crossing to CR 201. The project will add paved shoulders and a center turn lane. The project ROW within the Contributing Zone is approximately 13.8 acres within the South Fork of the San Gabriel River watershed.

In addition to the described activities, temporary erosion and sedimentation controls will be installed prior to commencing site disturbance and maintained during construction. No wastewater will be generated by this roadway project.

PERMANENT POLLUTION ABATEMENT MEASURES

The selected BMP for this project is the roadway receiving engineered filter strips (VFS) along the length of the roadway areas. Cross-sections confirm the VFS widths. The approved measures meet the required 80 percent removal of the increased load in total suspended solids caused by the project. Impervious cover is increasing to 6.5 acres.

STANDARD CONDITIONS

1. Pursuant to Chapter 7 Subchapter C of the Texas Water Code, any violations of the requirements in 30 TAC Chapter 213 may result in administrative penalties.

2. The holder of the approved Edwards Aquifer protection plan must comply with all provisions of 30 TAC Chapter 213 and all best management practices and measures contained in the approved plan. Additional and separate approvals, permits, registrations and/or authorizations from other TCEQ Programs (i.e., Stormwater, Water Rights, UIC) can be required depending on the specifics of the plan.

Prior to Commencement of Construction:

3. All contractors conducting regulated activities at the referenced project location shall be provided a copy of this notice of approval. At least one complete copy of the approved CZP and this notice of approval shall be maintained at the project location until all regulated activities are completed.

4. Any modification to the activities described in the referenced CZP application following the date of approval may require the submittal of a plan to modify this approval, including the payment of appropriate fees and all information necessary for its review and approval prior to initiating construction of the modifications.

5. The applicant must provide written notification of intent to commence construction, replacement, or rehabilitation of the referenced project. Notification must be submitted to the Austin Regional Office no later than 48 hours prior to commencement of the regulated activity. Written notification must include the name of the approved plan and file number for the regulated activity, the date on which the regulated activity will commence, and the name of the prime contractor with the name and telephone number of the contact person.

6. Temporary erosion and sedimentation (E&S) controls, i.e., silt fences, rock berms, stabilized construction entrances, or other controls described in the approved Storm Water Pollution Prevention Plan (SWPPP) must be installed prior to construction and maintained during construction. Temporary E&S controls may be removed when vegetation is established, and the construction area is stabilized. The TCEQ may monitor stormwater discharges from the site to evaluate the adequacy of temporary E&S control measures. Additional controls may be necessary if excessive solids are being discharged from the site.

During Construction:

7. During the course of regulated activities related to this project, the applicant or his agent shall comply with all applicable provisions of 30 TAC Chapter 213, Edwards Aquifer. The applicant shall remain responsible for the provisions and conditions of this approval until such responsibility is legally transferred to another person or entity.

8. If sediment escapes the construction site, the sediment must be removed at a frequency sufficient to minimize offsite impacts to water quality (e.g., fugitive sediment in street being washed into surface streams by the next rain). Sediment must be removed from sediment traps or sedimentation ponds not later than when design capacity has been significantly reduced. Litter, construction debris, and construction chemicals exposed to stormwater shall be prevented from becoming a pollutant source for stormwater discharges (e.g., screening outfalls, picked up daily).

9. Intentional discharges of sediment laden water are not allowed. If dewatering becomes necessary, the discharge will be filtered through appropriately selected best management practices. These may include vegetated filter strips, sediment traps, rock berms, silt fence rings, etc.

10. The following records shall be maintained and made available to the executive director upon request: the dates when major grading activities occur, the dates when construction activities temporarily or permanently cease on a portion of the site, and the dates when stabilization measures are initiated.

11. Stabilization measures shall be initiated as soon as practicable in portions of the site where construction activities have temporarily or permanently ceased, and construction activities will not resume within 21 days. When the initiation of stabilization measures by the 14th day is precluded by weather conditions, stabilization measures shall be initiated as soon as practicable.

12. This approval does not authorize the installation of temporary aboveground storage tanks on this project. If the contractor desires to install a temporary aboveground storage tank for use during construction, an application to modify this approval must be submitted and approved prior to installation. The application must include information related to tank location and spill containment.

After Completion of Construction:

13. Owners of permanent BMPs and measures must ensure that the BMPs and measures are constructed and function as designed. A Texas licensed professional engineer must certify in writing that the permanent BMPs or measures were constructed as designed. The certification letter must be submitted to the Austin Regional Office within 30 days of site completion.

14. The applicant shall be responsible for maintaining the permanent BMPs after construction until such time as the maintenance obligation is either assumed in writing by another entity having ownership or control of the property (such as without limitation, an owner's association, a new property owner or lessee, a district, or municipality) or the ownership of the property is transferred to the entity. Such entity shall then be responsible for maintenance until another entity assumes such obligations in writing or ownership is transferred.

15. Upon legal transfer of this property, the new owner(s) is required to comply with all terms of the approved CZP. If the new owner intends to commence any new regulated activity on the site, a new CZP that specifically addresses the new activity must be submitted to the executive director. Approval of the plan for the new regulated activity by the executive director is required prior to commencement of the new regulated activity.

16. A CZP approval or extension will expire and no extension will be granted if more than 50% of the total construction has not been completed within ten years from the initial approval of a plan. A new Contributing Zone Plan must be submitted to the Austin Regional Office with the appropriate fees for review and approval by the executive director prior to commencing any additional regulated activities.

17. At project locations where construction is initiated and abandoned, or not completed, the site shall be returned to a condition such that the aquifer is protected from potential contamination.

This action is taken under authority delegated by the Executive Director of the Texas Commission on Environmental Quality. If you have any questions or require additional information, please contact Mr. Kevin Lee Smith, P.E. of the Edwards Aquifer Protection Program of the Austin Regional Office at 512-339-2929.

Sincerely,

Robert Sadlier, Section Manager
Edwards Aquifer Protection Program
Texas Commission on Environmental Quality

RCS/kls

STORM WATER POLLUTION PREVENTION PLAN
(SWPPP)

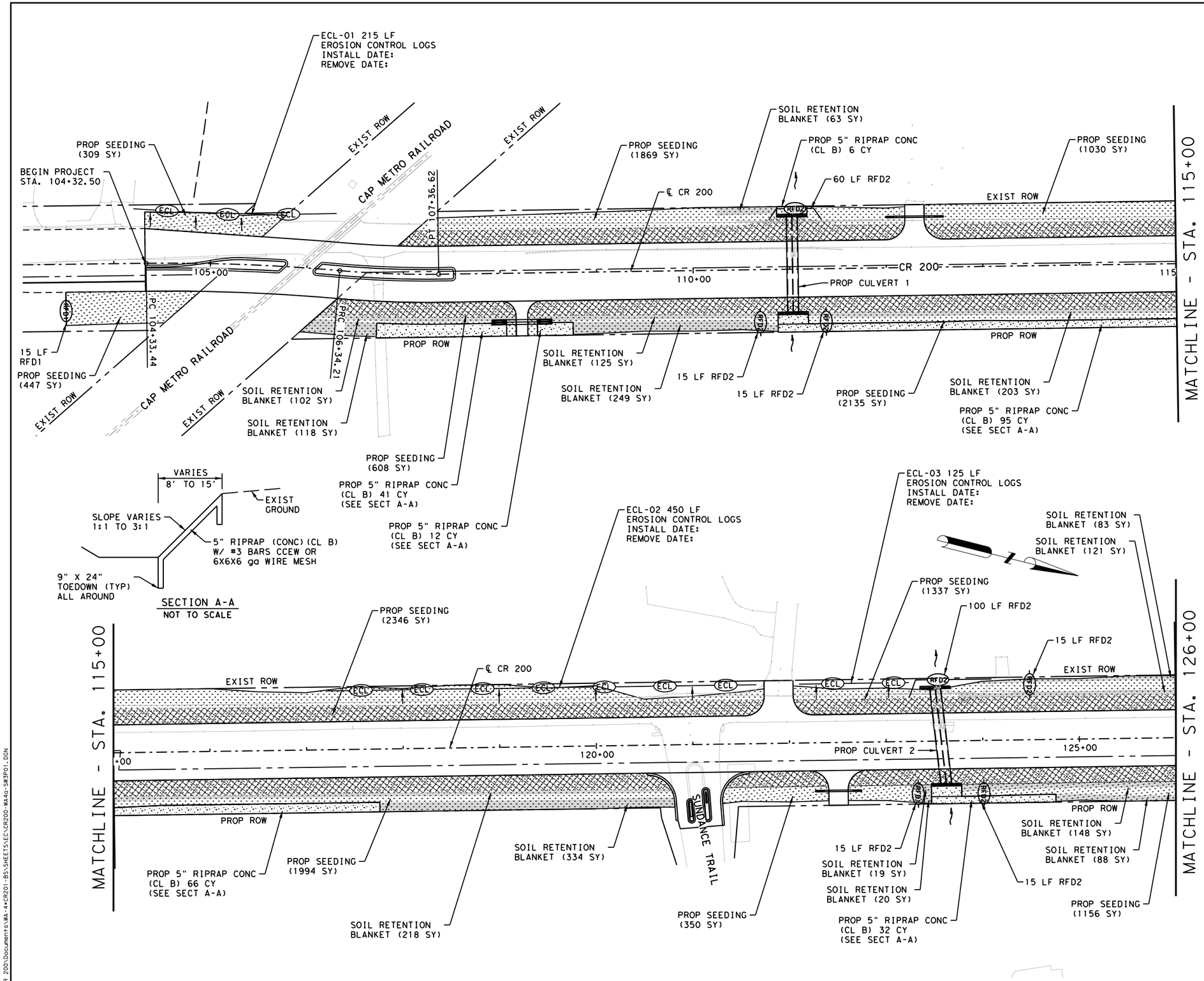

0 50 100
SCALE: 1"=100'

LEGEND

- CULVERT/CREEK FLOW DIRECTION
- DITCH FLOW DIRECTION
- ECL BIODEGRADABLE EROSION CONTROL LOGS
- RFD2 ROCK FILTER DAM TYPE 2
- VEGETATIVE FILTER STRIPS (VFS)
- SEEDING
- SOIL RETENTION BLANKET

NOTE: CONSTRUCTION EXITS TO BE CONSTRUCTED PRIOR TO ANY CONSTRUCTION ACTIVITY. COORDINATE WITH CONSTRUCTION OBSERVER REGARDING PLACEMENT OF ITEMS 161 & 162.

STATE OF TEXAS
J. KENT O'BRIEN
64398
REGISTERED PROFESSIONAL ENGINEER
5/9/2019

WILLIAMSON COUNTY 1848

WILLIAMSON COUNTY PRECINCT #2

JONES|CARTER
Texas Board of Professional Engineers Registration No. F-439
6330 West Loop South, Suite 150 • Bellaire, Texas 77401 • 713.777.5337

CR 200
FROM CMTA R.R. TO CR 201

SW3P PLAN

SHEET 1 OF 3 | SHEET # 108

CR200 PDF - GS.pltcfg
E=CR200
11:45:33 AM
5/11/2019
E:\OBES\CR 200\Documents\WA-4=CR201-BS\SHEETS\EC\CR200-WA4G-SW3P01.DGN

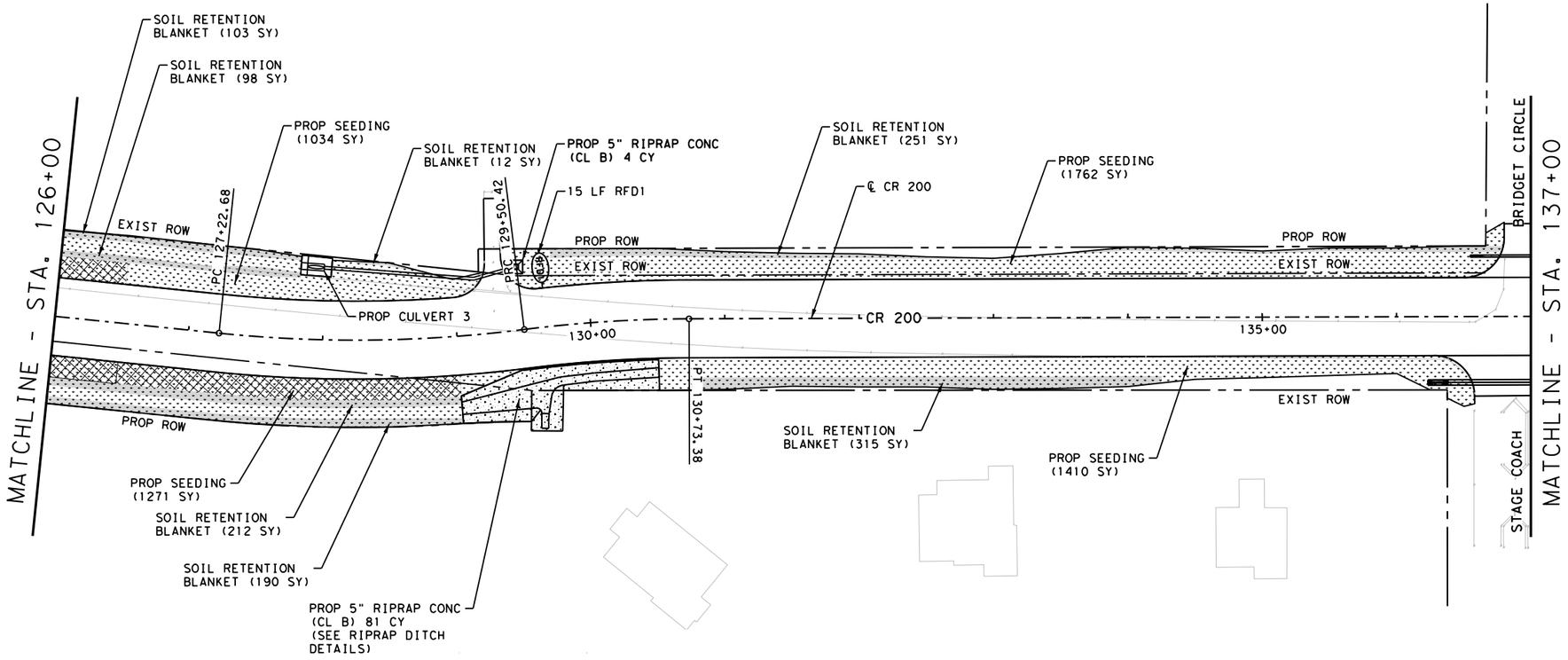

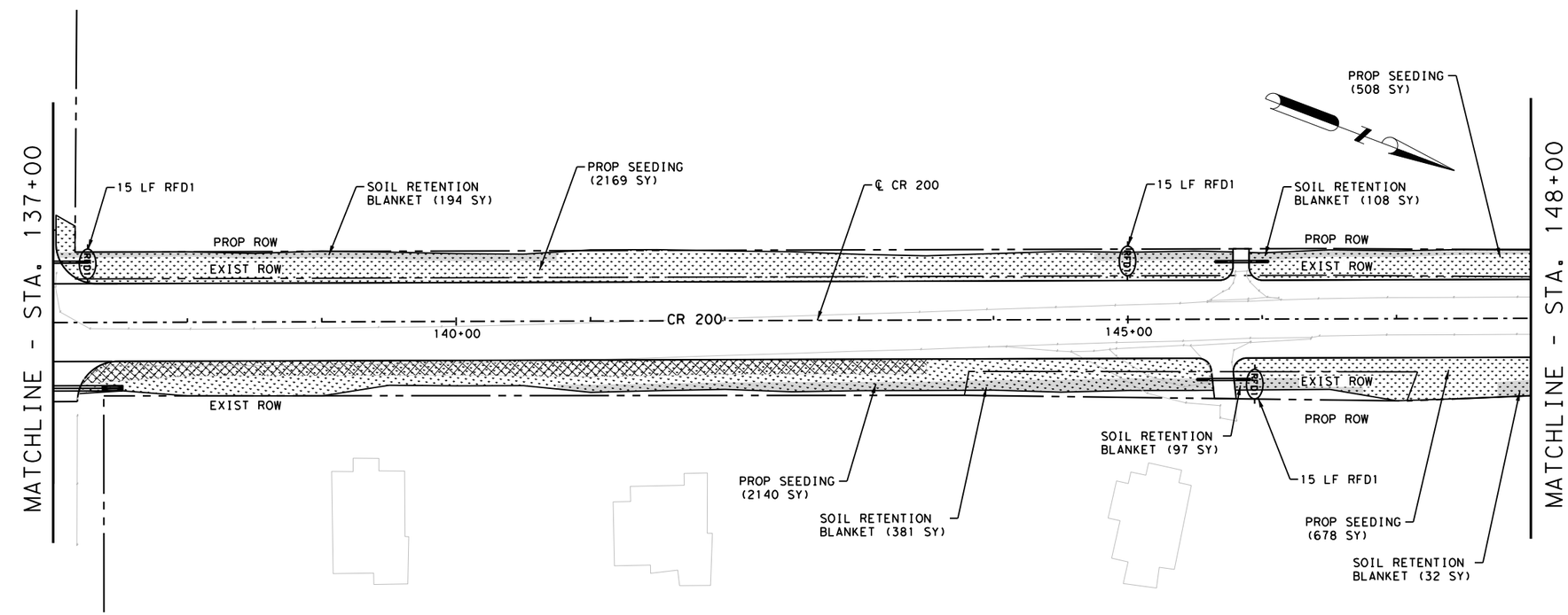

0 50 100
SCALE: 1"=100'

LEGEND

- CULVERT/CREEK FLOW DIRECTION
- DITCH FLOW DIRECTION
- ECL BIODEGRADABLE EROSION CONTROL LOGS
- RFD2 ROCK FILTER DAM TYPE 2
- VEGETATIVE FILTER STRIPS (VFS)
- SEEDING
- SOIL RETENTION BLANKET

NOTE: CONSTRUCTION EXITS TO BE CONSTRUCTED PRIOR TO ANY CONSTRUCTION ACTIVITY. COORDINATE WITH CONSTRUCTION OBSERVER REGARDING PLACEMENT OF ITEMS 161 & 162.

STATE OF TEXAS
J. KENT O'BRIEN
64398
REGISTERED PROFESSIONAL ENGINEER
5/9/2019

WILLIAMSON COUNTY 1848

WILLIAMSON COUNTY PRECINCT #2

JONES|CARTER
Texas Board of Professional Engineers Registration No. F-439
6330 West Loop South, Suite 150 • Bellaire, Texas 77401 • 713.777.5337

CR 200
FROM CMTA R.R. TO CR 201

SW3P PLAN

SHEET 2 OF 3 | SHEET # 109

CR200.PDF - GS.pltcfg
ExCR200
11:45:34 AM
5/11/2019
E:\OBES\CR 200\Documents\WA-44CR201-BS\SHEETS\EC\CR200-WA4a-SW3P02.DGN

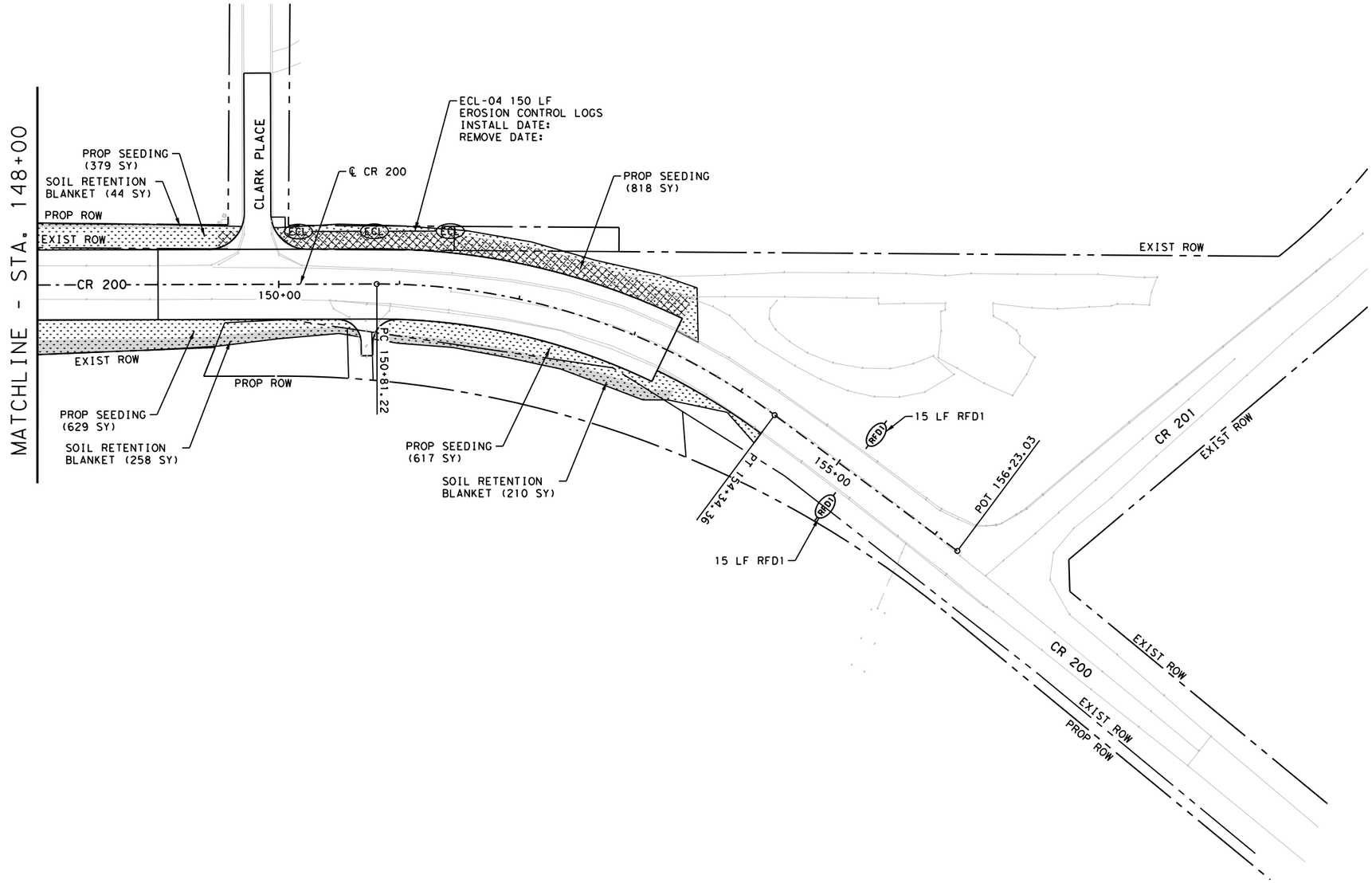

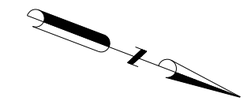

0 50 100
SCALE: 1"=100'

LEGEND

- CULVERT/CREEK FLOW DIRECTION
- DITCH FLOW DIRECTION
- ECL BIODEGRADABLE EROSION CONTROL LOGS
- RFD2 ROCK FILTER DAM TYPE 2
- VEGETATIVE FILTER STRIPS (VFS)
- SEEDING
- SOIL RETENTION BLANKET

NOTE: CONSTRUCTION EXITS TO BE CONSTRUCTED PRIOR TO ANY CONSTRUCTION ACTIVITY. COORDINATE WITH CONSTRUCTION OBSERVER REGARDING PLACEMENT OF ITEMS 161 & 162.

STATE OF TEXAS
J. KENT O'BRIEN
64398
REGISTERED
PROFESSIONAL ENGINEER
5/9/2019

WILLIAMSON COUNTY 1848

WILLIAMSON COUNTY PRECINCT #2

JONES|CARTER
Texas Board of Professional Engineers Registration No. F-439
6330 West Loop South, Suite 150 • Bellaire, Texas 77401 • 713.777.5337

CR 200
FROM CMTA R.R. TO CR 201

SW3P PLAN

SHEET 3 OF 3 | SHEET # 110

CR200 PDF - GS.pltcfg
E:CR200
11:45:36 AM
5/11/2019
E:\OBES\CR 200\Documents\WA-44CR201-BS\SHEETS\EC\CR200-WA4G-SW3P03.DGN

A. GENERAL SITE DATA

1. PROJECT LIMITS: *From Sta 104+32.50 at CMTA RR to Sta 154+34.36 at CR 201.*

Begin Project Coordinates : Latitude (N) : 30° 40' 33.03" *Longitude (W) :* -97° 55' 56.19"

2. PROJECT SITE MAPS:

- *Project Location Map: Title Sheet*
- *Drainage Patterns: See Drainage Area Maps*
- *Slopes Anticipated After Major Gradings or Areas of Soil Disturbance: Typical Sections (Sheets 5-7)*
- *Location of Erosion and Sediment Controls: SW3P Site Plans (Sheets 108-111)*
- *Surface Waters and Discharge Locations: Drainage and Culvert Layouts (Sheets 67-70)*
- *Project Specific Location(s) (PSL): To be determined by the project Construction Personnel. Location(s) shown on SW3P Site Map (if PSL location(s) is within one mile of project) and information located in project SW3P Binder (Reference item #10 below).*

3. PROJECT DESCRIPTION:

For the Construction of Roadway, consisting of grading, HMAC surfacing, erosion control, and culvert structures.

4. MAJOR SOIL DISTURBING ACTIVITIES:

Pavement removal, reconstruction & widening, culvert removal and replacement.

5. EXISTING CONDITION OF SOIL & VEGETATIVE COVER AND % OF EXISTING VEGETATIVE COVER:

Project Area consists mainly of silty clays intermingled with clays and silty clay loam. Vegetation cover is primarily in the form of maintained ROW grasslands with trees and shrubs on fencerows. New ROW is densely vegetated in some areas.

6. TOTAL PROJECT AREA: *13.75* Acres

7. TOTAL AREA TO BE DISTURBED: *12.48* Acres (*91* %)

8. WEIGHTED RUNOFF COEFFICIENT

BEFORE CONSTRUCTION: *0.29*
AFTER CONSTRUCTION: *0.40*

9. NAME OF RECEIVING WATERS:

The project is drained by a drainage swale and ephemeral first-order unnamed tributary of the South Fork San Gabriel River (Segment ID# 1250).

10. PROJECT SW3P Binder:

A. For projects disturbing one to five acres, The Contractor will maintain a SW3P Binder at the project field office (if there is not a project field office, should be kept on the Job Site at all times) which contains the following: Index Sheet, TCEQ Signature Authority, TCEQ Small Construction Site Notice, Contractor Certification of Compliance, SW3P Inspector Qualification Statements, Inspection and Maintenance Reports (Form 2118), SW3P Sheet, Site Location Maps, Stored Material Lists specifying associated control measures and the Appendix which contains the TPDES Construction General Permit, MS4 Operator Notification(s) and the Construction PSL Permits per all applicable requirements.

B. For projects disturbing 5 acres or more, the Contractor will follow the actions listed in (10.A.) above with the addition of the following: Notice Of Intent (N.O.I.) and Fee Payment Form, TCEQ Large Construction Site Notice (to be used instead of Small Site Notice), and TPDES Permit Coverage Notice.

C. For projects disturbing less than one acre, actions described in (10.A.) and (10.B.) above are not required. Acreage is calculated by adding Total Area To Be Disturbed Acres on project (See #7 above) and the PSL(s) acreage located within one mile of project.

B. EROSION AND SEDIMENT CONTROLS

1. SOIL STABILIZATION PRACTICES: (Select T = Temporary or P = Permanent, as applicable)

- T TEMPORARY SEEDING
- ___ MULCHING (Hay or Straw)
- ___ BUFFER ZONES
- ___ PLANTING
- P SEEDING
- ___ SODDING
- P PRESERVATION OF NATURAL RESOURCES
- ___ FLEXIBLE CHANNEL LINER
- ___ RIGID CHANNEL LINER
- ___ SOIL RETENTION BLANKET
- ___ COMPOST MANUFACTURED TOPSOIL
- ___ VERTICAL TRACKING
- T OTHER: *Disturbed areas on which construction activity has ceased, either temporarily or permanently, shall be stabilized within 14 days unless activities are scheduled to resume and do so within 21 days.*

2. STRUCTURAL PRACTICES:
(T = Temporary or P = Permanent)

- ___ SILT FENCES
- T EROSION CONTROL LOGS
- ___ EROSION CONTROL COMPOST BERMS (Low Velocity)
- T ROCK FILTER DAMS
- ___ DIVERSION, INTERCEPTOR, OR PERIMETER DIKES
- ___ DIVERSION, INTERCEPTOR, OR PERIMETER SWALES
- ___ DIVERSION DIKE AND SWALE COMBINATIONS
- ___ PIPE SLOPE DRAINS
- ___ PAVED FLUMES
- T ROCK BEDDING AT CONSTRUCTION EXIT
- ___ TIMBER MATTING AT CONSTRUCTION EXIT
- ___ CHANNEL LINERS
- ___ SEDIMENT TRAPS
- ___ SEDIMENT BASINS
- ___ STORM INLET SEDIMENT TRAP
- ___ STONE OUTLET STRUCTURES
- ___ CURBS AND GUTTERS
- ___ STORM SEWERS
- ___ VELOCITY CONTROL DEVICES
- P OTHER: *Vegetative filter strips*

NOTE: TOP OF BMP'S SHOULD NOT BE HIGHER THAN ROADWAY ELEVATION AS NOT TO FLOOD ROADWAY UNLESS PRIOR APPROVAL FROM ENGINEER IS OBTAINED.

3. STORM WATER MANAGEMENT:

A. Storm water drainage will be provided by ditches and culverts which will carry drainage within the R.O.W. to the lows within the roadway and project site which drains to natural facilities.

B. Non paved areas and ditches shall be stabilized with a permanent vegetative cover.

C. Other permanent erosion controls include hydraulic design to limit structure outlet velocities and grading design generally consisting of 4 :1 or flatter slopes with permanent vegetative cover.

4. STORM WATER MANAGEMENT ACTIVITIES: (Sequence of Construction)

1. *Place temporary SW-3P measures.*
2. *Prepare ROW*
3. *Construct roadway. Activities to include excavation, embankment, concrete pavement, and curb and gutter. Sediment control devices will be added or adjusted as needed to continue controlling runoff.*
4. *Stabilize disturbed areas with seeding.*
5. *Structural practices on grassed slopes will remain in place until seeding is effective. Inlet protection controls may be removed upon completion of pavement construction activities.*

5. NON-STORM WATER DISCHARGES:

C. OTHER REQUIREMENTS & PRACTICES

1. MAINTENANCE:

Maintain all erosion and sediment controls in good working order. Perform any necessary cleaning/repairs/replacements at the earliest possible date prior to next rain event, but no later than 7 calendar days. Ensure the surrounding ground has dried sufficiently to prevent damage from equipment. "Too Wet" is the only reason for not adhering to time frames described. When construction activities permanently or temporarily cease and are not expected to resume for 14 or more days on a disturbed portion of the site, stabilization measures must be initiated immediately.

2. INSPECTION:

A Construction Observer will perform a regularly scheduled SW3P inspection every 7 calendar days. An Inspection and Maintenance Report, signed by the Construction Observer and the Contractor, will be filed for each inspection. Revise/clean/repair/replace each BMP control device in accordance with the current Field Inspection and Maintenance Report (Form 2118) and Item 1 (Maintenance) above.

3. WASTE MATERIALS:

On a daily basis, or as may be directed, collect all waste materials, trash and debris from the construction site and deposit into a metal dumpster having a secure cover and which meets all state and local city solid waste management requirements. Empty the dumpster as required by regulation, or as may be directed, at a local approved landfill site. Do not bury construction waste on the construction project site.

4. HAZARDOUS WASTE & SPILL REPORTING:

As a minimum, any products in the following categories are considered to be hazardous: Paints, Acids, Solvents, Fuels, Asphalt Products, Chemical Additives for Soil Stabilization, and Concrete Curing Compounds or Additives. When storing hazardous material on the project site, or at a Project Specific Location, take all practicable precaution to prevent and/or contain any spillage of these materials. In the event of a spill, contact the spill coordinator immediately.

5. SANITARY WASTE:

Use a licensed sanitary waste management contractor to collect all sanitary waste from portable units as may be required by local regulation, or as directed.

6. CONSTRUCTION VEHICLE TRACKING:

On a regular basis, or as may be directed, dampen haul roads for dust control and stabilize construction entrances/exits. Provide for a motorized broom or vacuum type sweeper to be available on a daily basis, or as may be directed, to remove sediment from paved roadways abutting or traversing the project site.

7. MANAGEMENT PRACTICES:

A. Construct disposal areas, stockpiles, haul roads and PSL's in a manner that will minimize and control the amount of sediment that may enter receiving waters. Do not locate disposal areas in any wetland, waterbody or streambed.

B. Locate construction staging areas, vehicle maintenance and PSL's areas in a manner to minimize the runoff of pollutants.

C. When working in or near a wetland, install and maintain operating soil erosion and sediment controls at all times during construction and isolate the work from the wetland.

D. Clear all waterways as soon as practicable of temporary embankment, temporary bridges, matting, falsework, piling, debris or other obstructions placed during construction operations that are not a part of the finished work.

E. Procedures and/or practices should be taken to control dust.

F. Sediment to be removed from roadways daily or when work begins after weather events if construction activities have ceased due to weather event.

G. The Contractor will be required to contain wash water from concrete trucks in a manner that will prevent same from entering any waterway.

H. The Contractor is responsible for insuring that all Subcontractors are aware and comply with all components of the Temporary Erosion Control Plans.

WILLIAMSON COUNTY 1848

JONES|CARTER
Texas Board of Professional Engineers Registration No. F-439
6330 West Loop South, Suite 150 • Bellaire, Texas 77401 • 713.777.5337

STATE OF TEXAS
J. KENT O'BRIEN
64398
REGISTERED PROFESSIONAL ENGINEER
5/9/2019

WILLIAMSON COUNTY

STORM WATER POLLUTION PREVENTION PLAN (SW3P)

TEMPLATE REVISION DATE: 06/12/2015

DESIGN	FED. RD. DIV. NO.	FEDERAL AID PROJECT NO.		HIGHWAY NO.
GRAPHICS	6			CR 200
	STATE	DISTRICT	COUNTY	SHEET NO.
CHECK	TEXAS		WILLIAMSON	111
CHECK	CONTROL	SECTION	JOB	

FILE NAME ____ DATE ____ DESIGNER ____

DISCLAIMER:
The use of this standard is governed by the "Texas Engineering Practice Act". No warranty of any kind is made by TxDOT for any purpose whatsoever. TxDOT assumes no responsibility for the conversion of this standard to other formats or for incorrect results or damages resulting from its use.

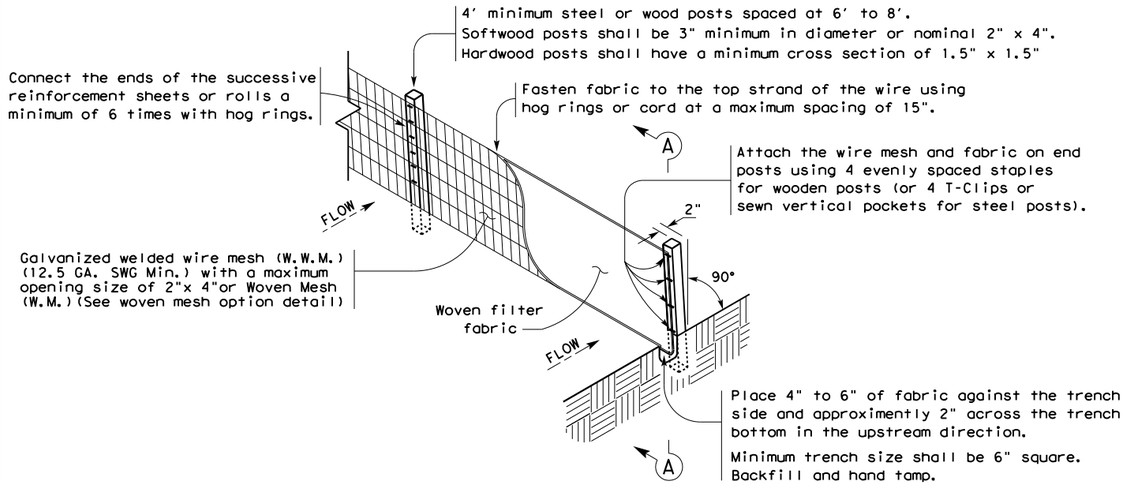

TEMPORARY SEDIMENT CONTROL FENCE

SCF

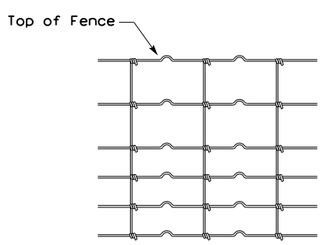

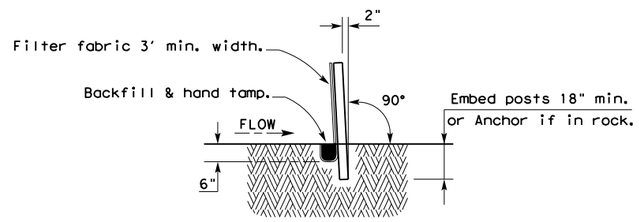

SECTION A-A

HINGE JOINT KNOT WOVEN MESH (OPTION) DETAIL

Galvanized hinge joint knot woven mesh (12.5 GA.SWG Min.) requires a minimum of five horizontal wires spaced at a maximum of 12 inches apart and all vertical wires spaced at a maximum of 12 inches apart.

SEDIMENT CONTROL FENCE USAGE GUIDELINES

A sediment control fence may be constructed near the downstream perimeter of a disturbed area along a contour to intercept sediment from overland runoff. A 2 year storm frequency may be used to calculate the flow rate to be filtered.

Sediment control fence should be sized to filter a maximum flow through rate of 100 GPM/FT^2. Sediment control fence is not recommended to control erosion from a drainage area larger than 2 acres.

LEGEND

Sediment Control Fence

SCF

GENERAL NOTES

1. Vertical tracking is required on projects where soil distributing activities have occurred unless otherwise approved.
2. Perform vertical tracking on slopes to temporarily stabilize soil.
3. Provide equipment with a track undercarriage capable of producing linear soil impressions measuring a minimum of 12" in length by 2" to 4" in width by 1/2" to 2" in depth.
4. Do not exceed 12" between track impressions.
5. Install continous linear track impressions where the minimum 12" length impressions are perpendicular to the slope or direction of water flow.

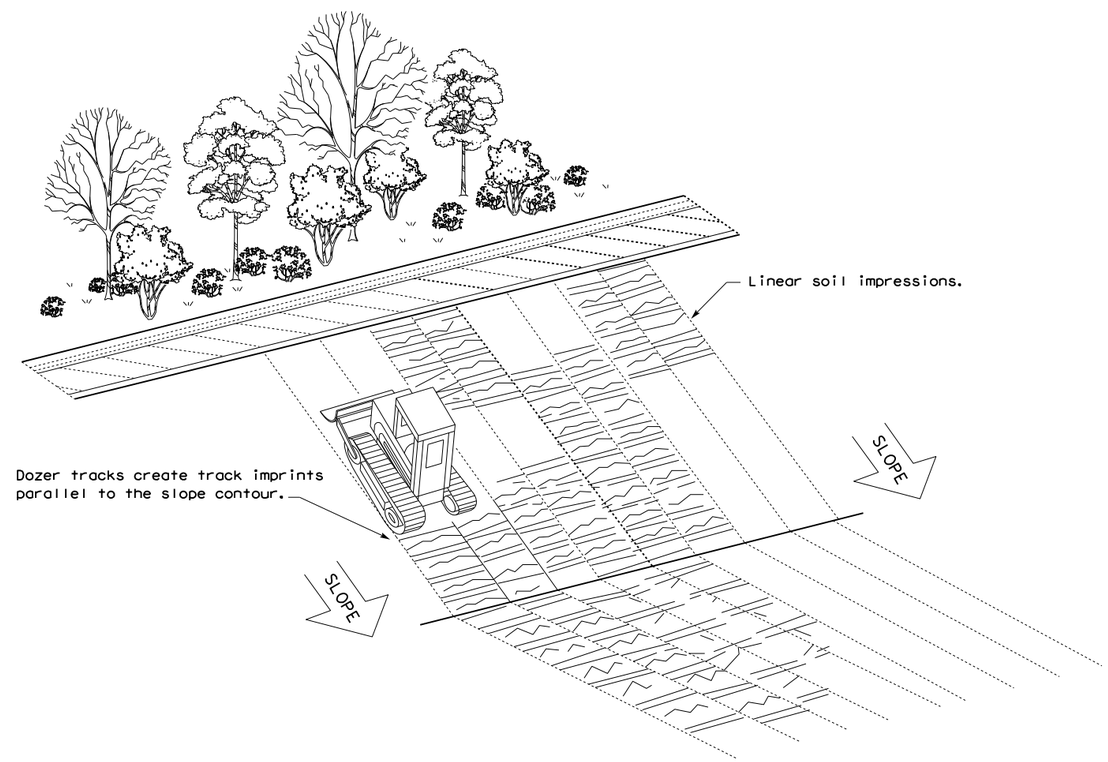

VERTICAL TRACKING

Texas Department of Transportation

Design Division Standard

TEMPORARY EROSION, SEDIMENT AND WATER POLLUTION CONTROL MEASURES

FENCE & VERTICAL TRACKING

EC(1)-16

FILE: ec116	DN: TxDOT	CK: KM	DW: VP	DN/CK: LS
© TxDOT: JULY 2016	CONT	SECT	JOB	HIGHWAY
REVISIONS	TBD	TBD	TBD	CR 200
	DIST		COUNTY	SHEET NO.
	AUS		WILLIAMSON	112

5/11/2019 11:45:38 AM
E:\OBES\CR 200\Documents\WA-4_CR201-BS\SHEETS\Standards\ErosionControl\ec116.dgn

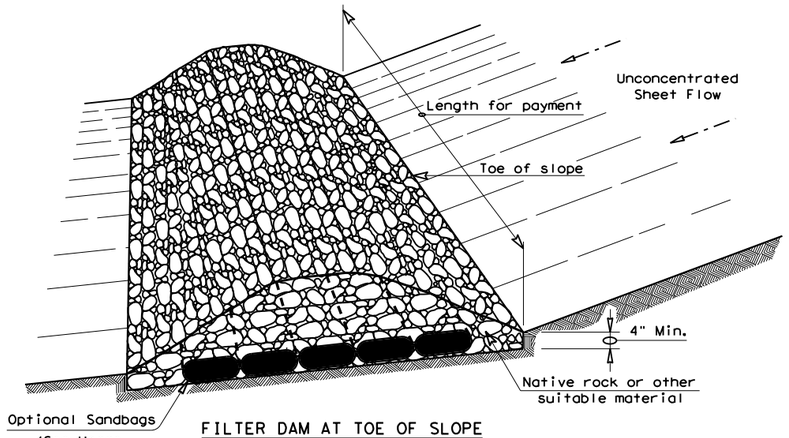

FILTER DAM AT TOE OF SLOPE

RFD1

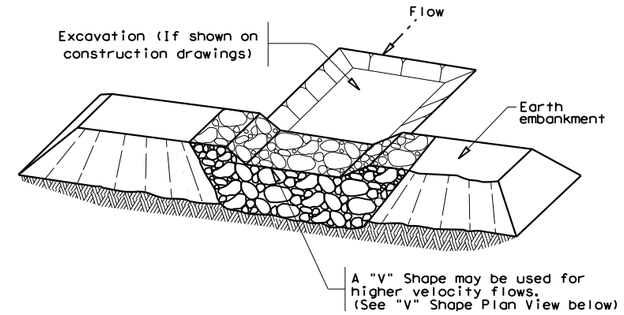

FILTER DAM AT SEDIMENT TRAP

RFD1 OR RFD2

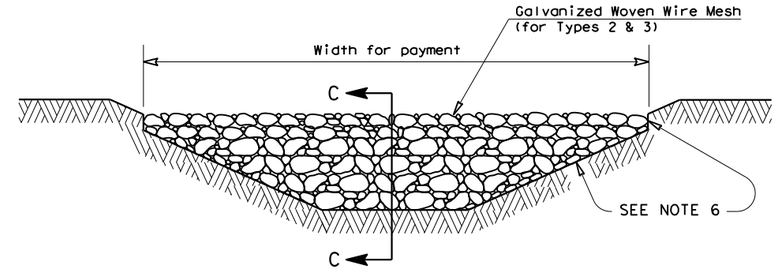

FILTER DAM AT CHANNEL SECTIONS

RFD1 OR RFD2 OR RFD3

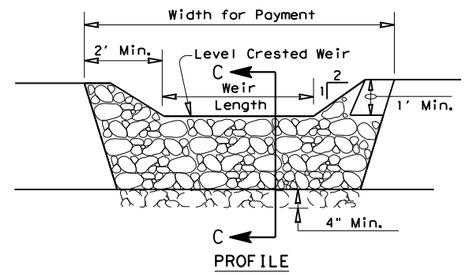

PROFILE

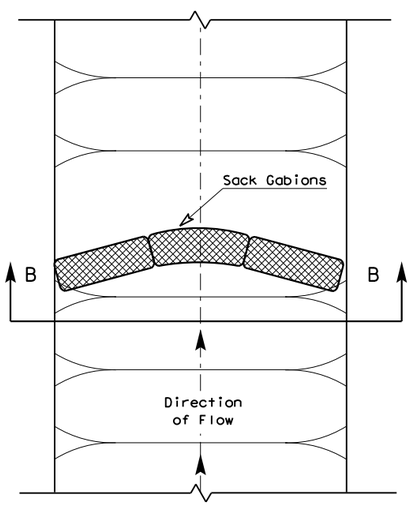

PLAN VIEW

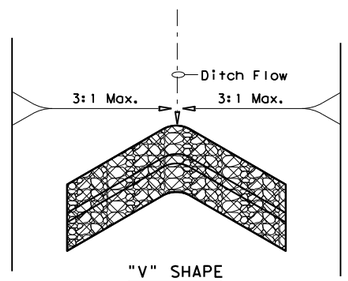

"V" SHAPE
PLAN VIEW

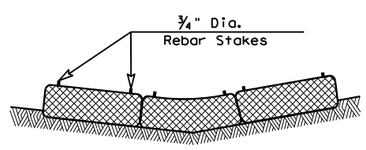

SECTION B-B

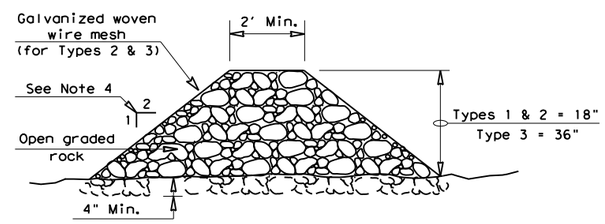

SECTION C-C

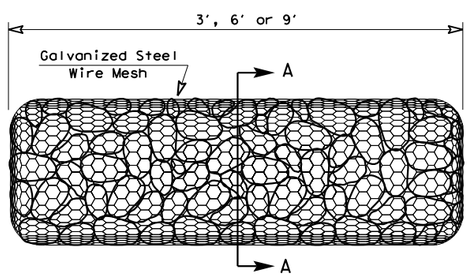

TYPE 4 (SACK GABIONS)

RFD4

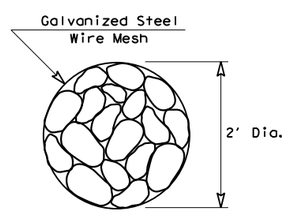

SECTION A-A

ROCK FILTER DAM USAGE GUIDELINES

Rock Filter Dams should be constructed downstream from disturbed areas to intercept sediment from overland runoff and/or concentrated flow. The dams should be sized to filter a maximum flow through rate of 60 GPM/FT^2 of cross sectional area. A 2 year storm frequency may be used to calculate the flow rate.

Type 1 (18" high with no wire mesh) (3" to 6" aggregate): Type 1 may be used at the toe of slopes, around inlets, in small ditches, and at dike or swale outlets. This type of dam is recommended to control erosion from a drainage area of 5 acres or less. Type 1 may not be used in concentrated high velocity flows (approximently 8 Ft/Sec or more) in which aggregate wash out may occur. Sandbags may be used at the embedded foundation (4" deep min.) for better filtering efficiency of low flows if called for on the plans or directed by the Engineer.

Type 2 (18" high with wire mesh) (3" to 6" aggregate): Type 2 may be used in ditches and at dike or swale outlets.

Type 3 (36" high with wire mesh) (4" to 8" aggregate): Type 3 may be used in stream flow and should be secured to the stream bed.

Type 4 (Sack gabions) (3" to 6" aggregate): Type 4 May be used in ditches and smaller channels to form an erosion control dam.

Type 5: Provide rock filter dams as shown on plans.

GENERAL NOTES

1. If shown on the plans or directed by the Engineer, filter dams should be placed near the toe of slopes where erosion is anticipated, upstream and/or downstream at drainage structures, and in roadway ditches and channels to collect sediment.
2. Materials (aggregate, wire mesh, sandbags, etc.) shall be as indicated by the specification for "Rock Filter Dams for Erosion and Sedimentation Control".
3. The rock filter dam dimensions shall be as indicated on the SW3P plans.
4. Side slopes should be 2:1 or flatter. Dams within the safety zone shall have sideslopes of 6:1 or flatter.
5. Maintain a minimum of 1' between top of rock filter dam weir and top of embankment for filter dams at sediment traps.
6. Filter dams should be embedded a minimum of 4" into existing ground.
7. The sediment trap for ponding of sediment laden runoff shall be of the dimensions shown on the plans.
8. Rock filter dam types 2 & 3 shall be secured with 20 gauge galvanized woven wire mesh with 1" diameter hexagonal openings. The aggregate shall be placed on the mesh to the height & slopes specified. The mesh shall be folded at the upstream side over the aggregate and tightly secured to itself on the downstream side using wire ties or hog rings. For in stream use, the mesh should be secured or staked to the stream bed prior to aggregate placement.
9. Sack Gabions should be staked down with ¾" dia. rebar stakes, and have a double-twisted hexagonal weave with a nominal mesh opening of 2 ½" x 3 ¼"
10. Flow outlet should be onto a stabilized area (vegetation, rock, etc.).
11. The guidelines shown hereon are suggestions only and may be modified by the Engineer.

PLAN SHEET LEGEND

Type 1 Rock Filter Dam	RFD1
Type 2 Rock Filter Dam	RFD2
Type 3 Rock Filter Dam	RFD3
Type 4 Rock Filter Dam	RFD4

Texas Department of Transportation — Design Division Standard

TEMPORARY EROSION, SEDIMENT AND WATER POLLUTION CONTROL MEASURES

ROCK FILTER DAMS

EC(2)-16

FILE: ec216	DN: TxDOT	CK: KM	DW: VP	DN/CK: LS
© TxDOT: JULY 2016	CONT	SECT	JOB	HIGHWAY
REVISIONS	TBD	TBD	TBD	CR 200
	DIST		COUNTY	SHEET NO.
	AUS		WILLIAMSON	113

DISCLAIMER:
The use of this standard is governed by the "Texas Engineering Practice Act". No warranty of any kind is made by TxDOT for any purpose whatsoever. TxDOT assumes no responsibility for the conversion of this standard to other formats or for incorrect results or damages resulting from its use.

DATE: 5/11/2019 11:45:38 AM
FILE: E:\OBES\CR 200\Documents\WA-4_CR201-BS\SHEETS\Standards\ErosionControl\ec23.dgn

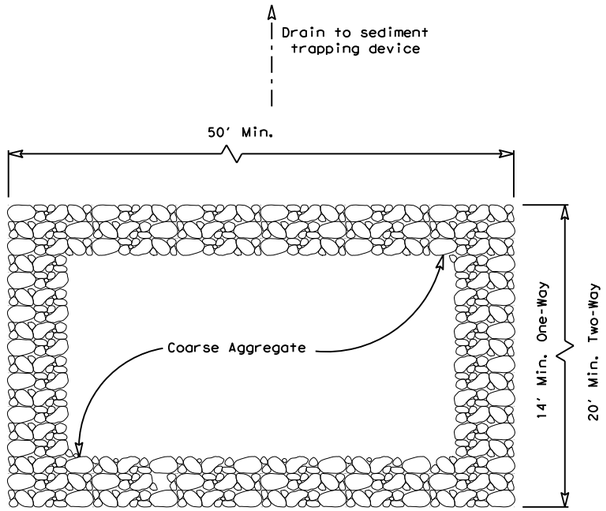

PLAN VIEW

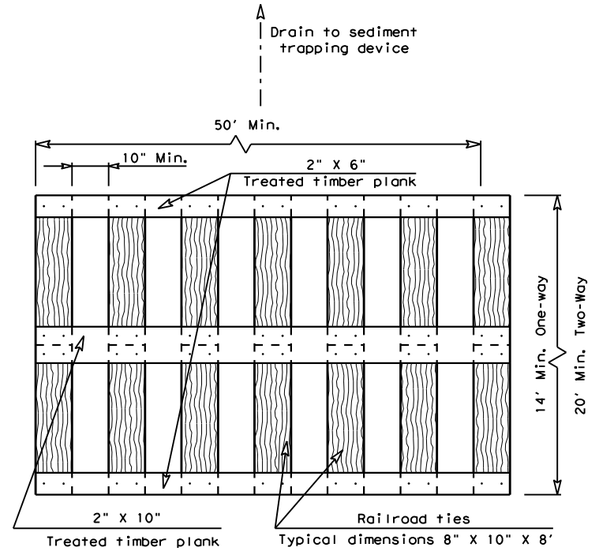

PLAN VIEW

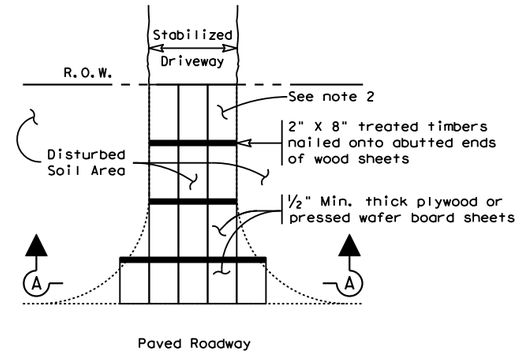

PLAN VIEW

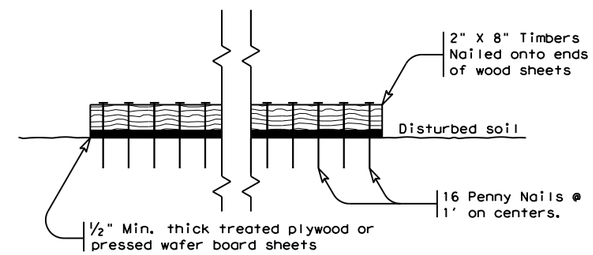

SECTION A-A

CONSTRUCTION EXIT (TYPE 3)

SHORT TERM

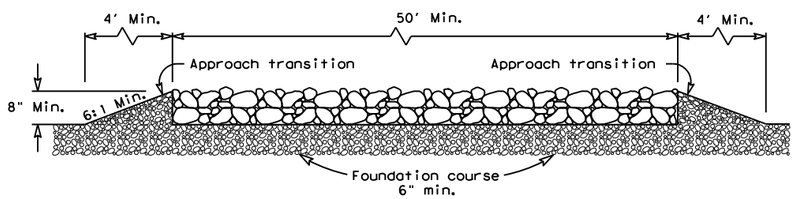

ELEVATION VIEW

CONSTRUCTION EXIT (TYPE 1)

ROCK CONSTRUCTION (LONG TERM)

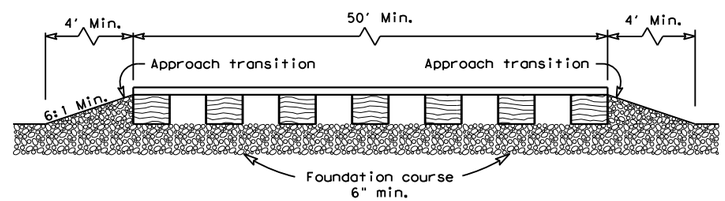

ELEVATION VIEW

CONSTRUCTION EXIT (TYPE 2)

TIMBER CONSTRUCTION (LONG TERM)

GENERAL NOTES (TYPE 1)

1. The length of the type 1 construction exit shall be as indicated on the plans, but not less than 50'.
2. The coarse aggregate should be open graded with a size of 4" to 8".
3. The approach transitions should be no steeper than 6:1 and constructed as directed by the Engineer.
4. The construction exit foundation course shall be flexible base, bituminous concrete, portland cement concrete or other materialas approved by the Engineer.
5. The construction exit shall be graded to allow drainage to a sediment trapping device.
6. The guidelines shown hereon are suggestions only and may be modified by the Engineer.
7. Construct exits with a width of at least 14 ft. for one-way and 20 ft. for two-way traffic for the full width of the exit, or as directed by the engineer.

GENERAL NOTES (TYPE 2)

1. The length of the type 2 construction exit shall be as indicated on the plans, but not less than 50'.
2. The treated timber planks shall be attached to the railroad ties with ½"x 6" min. lag bolts. Other fasteners may be used as approved by the Engineer.
3. The treated timber planks shall be #2 grade min., and should be free from large and loose knots.
4. The approach transitions shall be no steeper than 6:1 and constructed as directed by the Engineer.
5. The construction exit foundation course shall be flexible base, bituminous concrete, portland cement concrete or other material as approved by the Engineer.
6. The construction exit should be graded to allow drainage to a sediment trapping device.
7. The guidelines shown hereon are suggestions only and may be modified by the Engineer.
8. Construct exits with a width of at least 14 ft. for one-way and 20 ft. for two-way traffic for the full width of the exit, or as directed by the engineer.

GENERAL NOTES (TYPE 3)

1. The length of the type 3 construction exit shall be as shown on the plans, or as directed by the Engineer.
2. The type 3 construction exit may be constructed from open graded crushed stone with a size of two to four inches spread a min. of 4" thick to the limits shown on the plans.
3. The treated timber planks shall be #2 grade min., and should be free from large and loose knots.
4. The guidelines shown hereon are suggestions only and may be modified by the Engineer.

Texas Department of Transportation — Design Division Standard

TEMPORARY EROSION, SEDIMENT AND WATER POLLUTION CONTROL MEASURES

CONSTRUCTION EXITS

EC(3)-16

FILE: ec316	DN: TxDOT	CK: KM	DW: VP	DN/CK: LS
©TxDOT: JULY 2016	CONT	SECT	JOB	HIGHWAY
REVISIONS	TBD	TBD	TBD	CR 200
	DIST		COUNTY	SHEET NO.
	AUS		WILLIAMSON	114

DISCLAIMER:
The use of this standard is governed by the "Texas Engineering Practice Act". No warranty of any kind is made by TxDOT for any purpose whatsoever. TxDOT assumes no responsibility for the conversion of this standard to other formats or for incorrect results or damages resulting from its use.

DATE: 5/11/2019 11:45:39 AM
FILE: E:\OBES\CR 200\Documents\WA-4_CR201-BS\SHEETS\Standards\ErosionControl\ec316.dgn

DISCLAIMER:
The use of this standard is governed by the "Texas Engineering Practice Act". No warranty of any kind is made by TxDOT for any purpose whatsoever. TxDOT assumes no responsibility for the conversion of this standard to other formats or for incorrect results or damages resulting from its use.

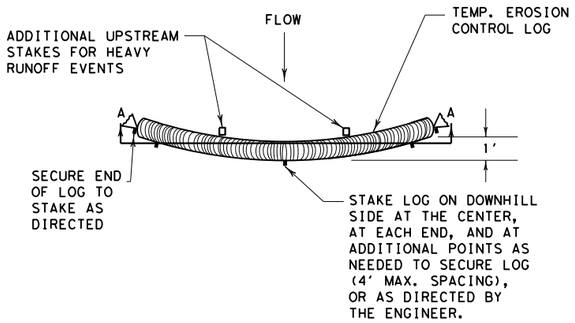

PLAN VIEW

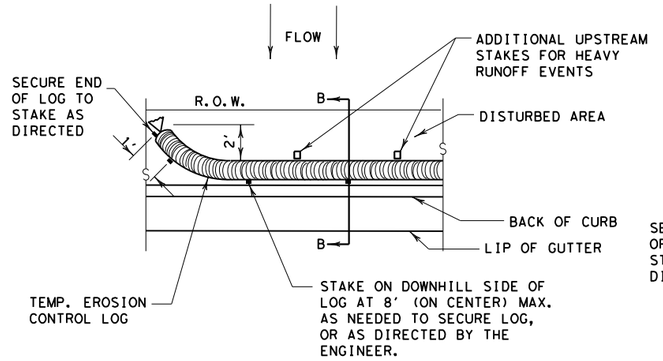

PLAN VIEW

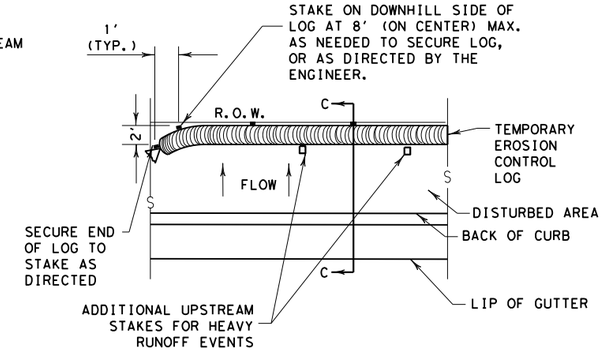

PLAN VIEW

GENERAL NOTES:

1. EROSION CONTROL LOGS SHALL BE INSTALLED IN ACCORDANCE WITH MANFACTURER'S RECOMMENDATIONS, OR AS DIRECTED BY THE ENGINEER.
2. LENGTHS OF EROSION CONTROL LOGS SHALL BE IN ACCORDANCE WITH MANUFACTURER'S RECOMMENDATIONS AND AS REQUIRED FOR THE PURPOSE INTENDED.
3. UNLESS OTHERWISE DIRECTED, USE BIODEGRADABLE OR PHOTODEGRADABLE CONTAINMENT MESH ONLY WHERE LOG WILL REMAIN IN PLACE AS PART OF A VEGETATIVE SYSTEM. FOR TEMPORARY INSTALLATIONS, USE RECYCLABLE CONTAINMENT MESH.
4. FILL LOGS WITH SUFFICIENT FILTER MATERIAL TO ACHIEVE THE MINIMUM COMPACTED DIAMETER SPECIFIED IN THE PLANS WITHOUT EXCESSIVE DEFORMATION.
5. STAKES SHALL BE 2" X 2" WOOD OR #3 REBAR, 2'-4' LONG, EMBEDDED SUCH THAT 2" PROTRUDES ABOVE LOG, OR AS DIRECTED BY THE ENGINEER.
6. DO NOT PLACE STAKES THROUGH CONTAINMENT MESH.
7. COMPOST CRADLE MATERIAL IS INCIDENTAL & WILL NOT BE PAID FOR SEPARATELY.
8. SANDBAGS USED AS ANCHORS SHALL BE PLACED ON TOP OF LOGS & SHALL BE OF SUFFICIENT SIZE TO HOLD LOGS IN PLACE.
9. TURN THE ENDS OF EACH ROW OF LOGS UPSLOPE TO PREVENT RUNOFF FROM FLOWING AROUND THE LOG.
10. FOR HEAVY RUNOFF EVENTS, ADDITIONAL UPSTREAM STAKES MAY BE NECESSARY TO KEEP LOG FROM FOLDING IN ON ITSELF.

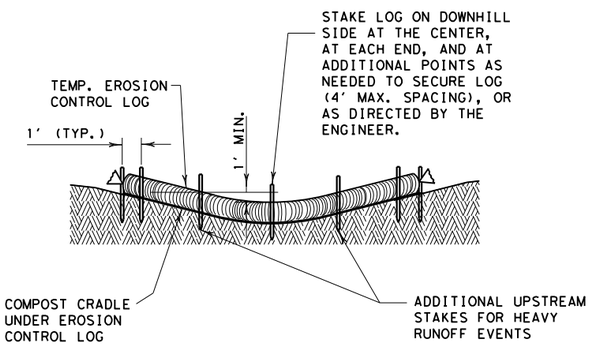

SECTION A-A

EROSION CONTROL LOG DAM

CL-D

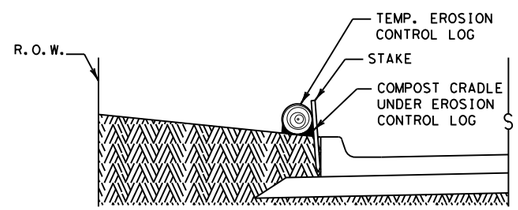

SECTION B-B

EROSION CONTROL LOG AT BACK OF CURB

CL-BOC

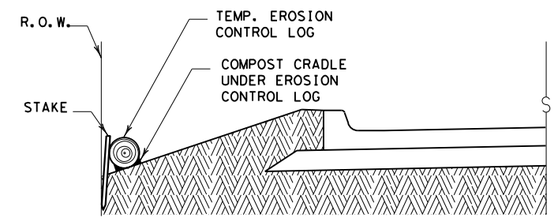

SECTION C-C

EROSION CONTROL LOG AT EDGE OF RIGHT-OF-WAY

CL-ROW

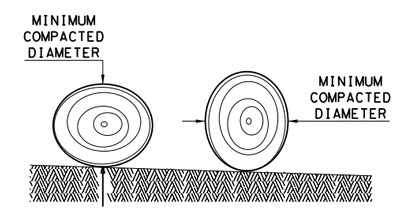

DIAMETER MEASUREMENTS OF EROSION CONTROL LOGS SPECIFIED IN PLANS

LEGEND

- CL-D — EROSION CONTROL LOG DAM
- CL-BOC — EROSION CONTROL LOG AT BACK OF CURB
- CL-ROW — EROSION CONTROL LOG AT EDGE OF RIGHT-OF-WAY
- CL-SST — EROSION CONTROL LOGS ON SLOPES STAKE AND TRENCHING ANCHORING
- CL-SSL — EROSION CONTROL LOGS ON SLOPES STAKE AND LASHING ANCHORING
- CL-DI — EROSION CONTROL LOG AT DROP INLET
- CL-CI — EROSION CONTROL LOG AT CURB INLET
- CL-GI — EROSION CONTROL LOG AT CURB & GRATE INLET

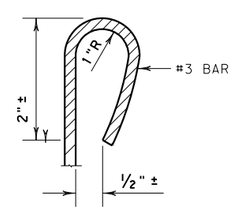

REBAR STAKE DETAIL

SEDIMENT BASIN & TRAP USAGE GUIDELINES

An erosion control log sediment trap may be used to filter sediment out of runoff draining from an unstabilized area.

Log Traps: The drainage area for a sediment trap should not exceed 5 acres. The trap capacity should be 1800 CF/Acre (0.5" over the drainage area).

Control logs should be placed in the following locations:

1. Within drainage ditches spaced as needed or min. 500' on center
2. Immediately preceding ditch inlets or drain inlets
3. Just before the drainage enters a water course
4. Just before the drainage leaves the right of way
5. Just before the drainage leaves the construction limits where drainage flows away from the project.

The logs should be cleaned when the sediment has accumulated to a depth of 1/2 the log diameter.

Cleaning and removal of accumulated sediment deposits is incidental and will not be paid for separately.

SHEET 1 OF 3

Texas Department of Transportation — Design Division Standard

TEMPORARY EROSION, SEDIMENT AND WATER POLLUTION CONTROL MEASURES

EROSION CONTROL LOG

EC(9)-16

FILE: ec916	DN: TxDOT	CK: KM	DW: LS/PT	CK: LS
© TxDOT: JULY 2016	CONT	SECT	JOB	HIGHWAY
REVISIONS	TBD	TBD	TBD	CR 200
	DIST		COUNTY	SHEET NO.
	AUS		WILLIAMSON	115

DATE: 5/11/2019
FILE: E:\OBES\CR 200\Documents\WA-4_CR201-BS\SHEETS\Standards\ErosionControl\ec916.dgn

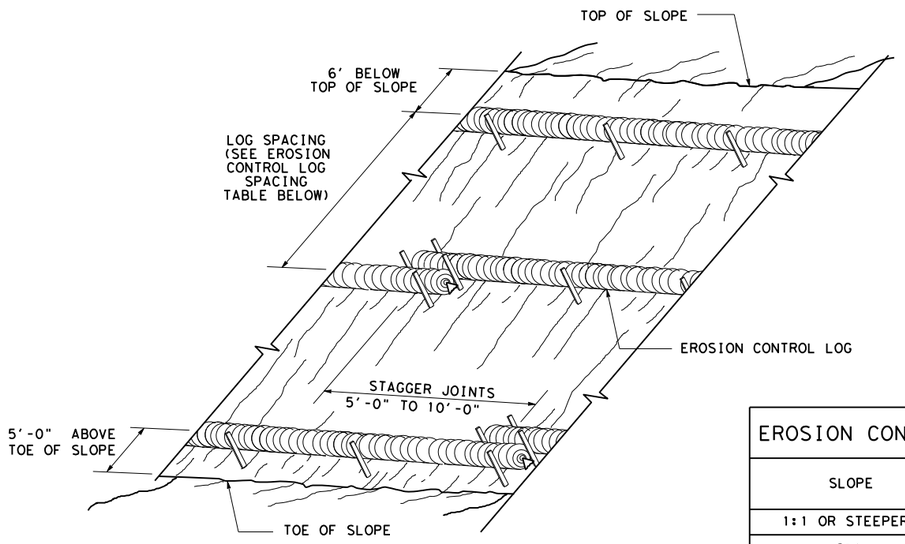

EROSION CONTROL LOGS ON SLOPES
STAKE AND TRENCHING ANCHORING

CL-SST

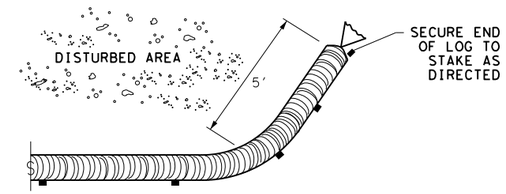

END SECTION RAP DETAIL

EROSION CONTROL LOG SPACING TABLE				
SLOPE	LOG DIAMETER			
	6"	8"	12"	18"
1:1 OR STEEPER	5'	10'	15'	20'
2:1	10'	20'	30'	40'
3:1	15'	30'	45'	60'
4:1 OR FLATTER	20'	40'	60'	80'

* ADJUSTMENTS CAN BE MADE FOR SOIL TYPE:
SOFT, LOAMY SOILS-ADJUST ROWS CLOSER TOGETHER;
HARD, ROCKY SOILS- ADJUST ROWS FARTHER APART

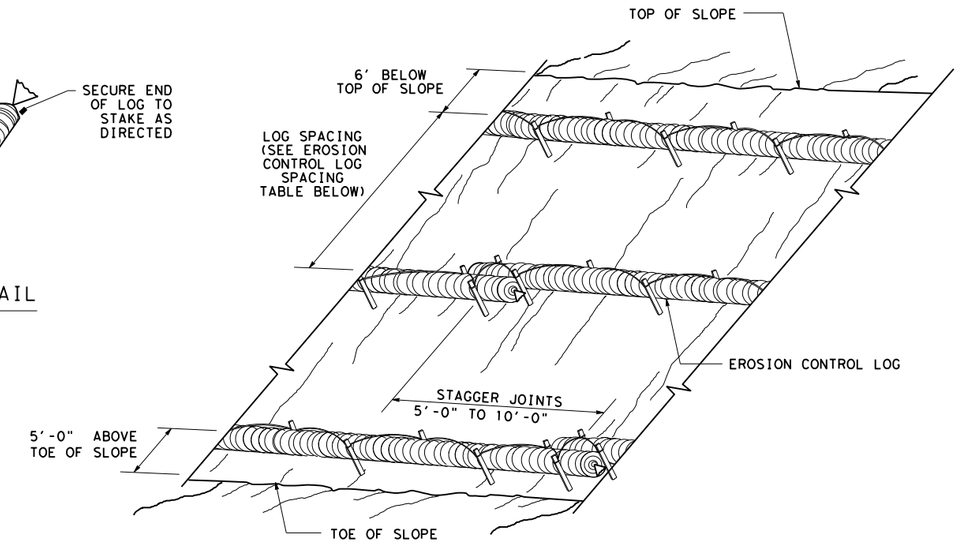

EROSION CONTROL LOGS ON SLOPES
STAKE AND LASHING ANCHORING

CL-SSL

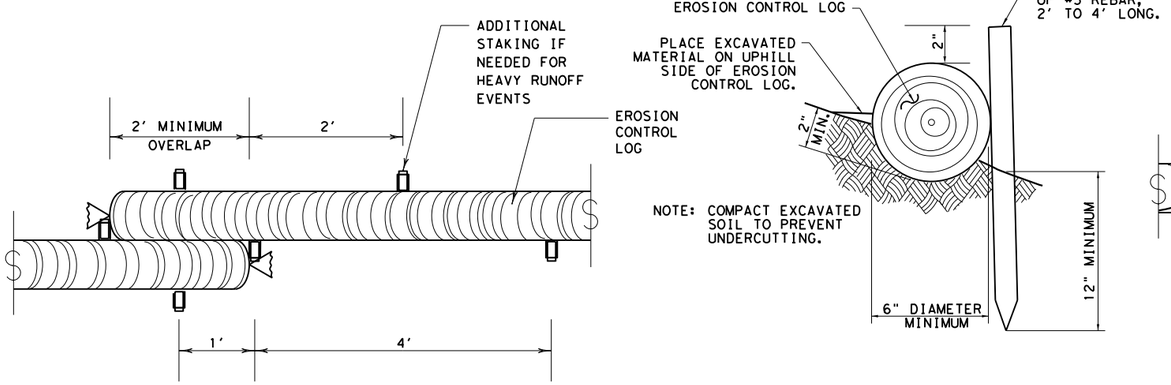

STAKE AND TRENCHING ANCHORING DETAIL

CL-SST

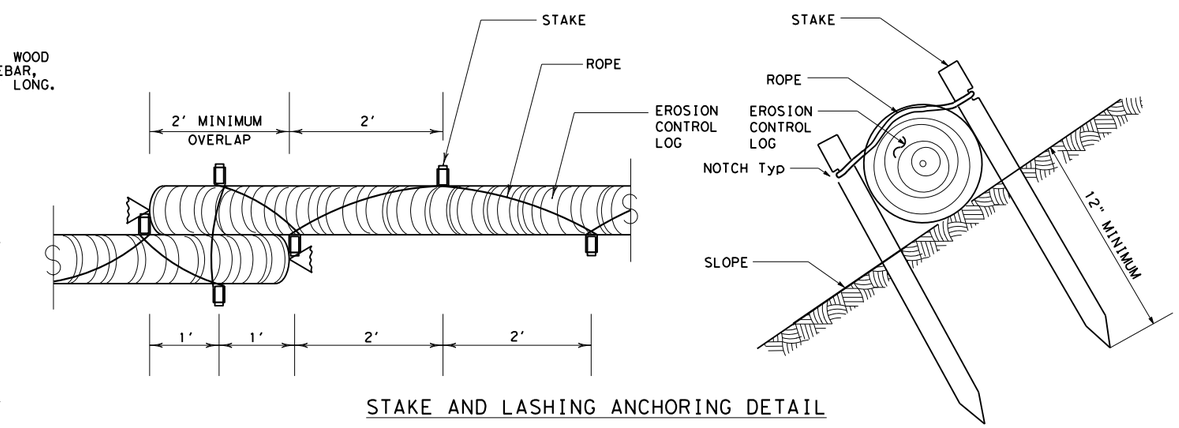

STAKE AND LASHING ANCHORING DETAIL

CL-SSL

TRENCH DEPTH TABLE	
LOG DIAMETER	DEPTH
6"	2"
8"	3"
12"	4"
18"	5"

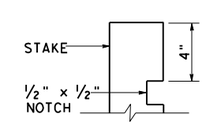

STAKE NOTCH DETAIL

SHEET 2 OF 3

Texas Department of Transportation — Design Division Standard

TEMPORARY EROSION, SEDIMENT AND WATER POLLUTION CONTROL MEASURES

EROSION CONTROL LOG

EC(9)-16

FILE: ec116	DN: TxDOT	CK: KM	DW: LS/PT	CK: LS
© TxDOT: JULY 2016	CONT	SECT	JOB	HIGHWAY
REVISIONS	TBD	TBD	TBD	CR 200
	DIST	COUNTY		SHEET NO.
	AUS	WILLIAMSON		116

DISCLAIMER:
The use of this standard is governed by the "Texas Engineering Practice Act". No warranty of any kind is made by TxDOT for any purpose whatsoever. TxDOT assumes no responsibility for the conversion of this standard to other formats or for incorrect results or damages resulting from its use.

DATE: 5/11/2019
FILE: E:\OBES\CR 200\Documents\WA-4_CR201-BS\SHEETS\Standards\ErosionControl\ec916.dgn

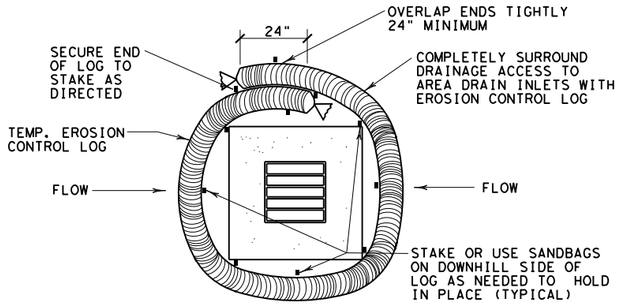

EROSION CONTROL LOG AT DROP INLET

CL-DI

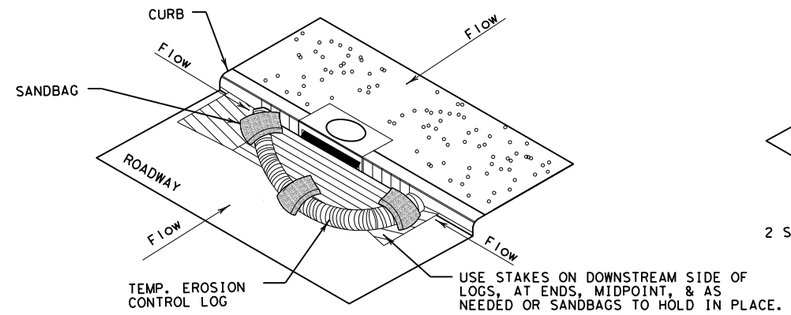

EROSION CONTROL LOG AT CURB INLET

CL-CI

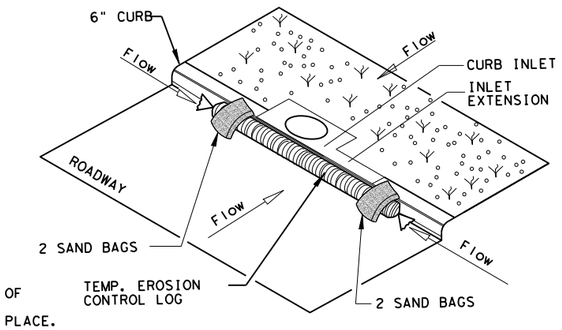

EROSION CONTROL LOG AT CURB INLET

CL-CI

NOTE:
EROSION CONTROL LOGS USED AT CURB INLETS SHOULD ONLY BE USED IF THEY WILL NOT IMPEDE TRAFFIC OR FLOOD THE ROADWAY OR WHEN THE STORM SEWER SYSTEM IS NOT FULLY FUNCTIONAL.

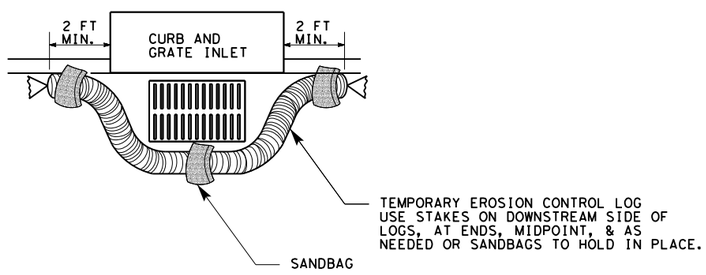

EROSION CONTROL LOG AT CURB & GRADE INLET

CL-GI

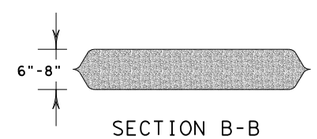

SECTION B-B

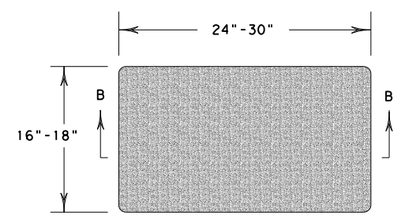

SANDBAG DETAIL

SHEET 3 OF 3

Texas Department of Transportation

Design Division Standard

TEMPORARY EROSION, SEDIMENT AND WATER POLLUTION CONTROL MEASURES

EROSION CONTROL LOG

EC(9)-16

FILE: ec916	DN: TxDOT	CK: KM	DW: LS/PT	CK: LS
© TxDOT: JULY 2016	CONT	SECT	JOB	HIGHWAY
REVISIONS	TBD	TBD	TBD	CR 200
	DIST		COUNTY	SHEET NO.
	AUS		WILLIAMSON	117

DISCLAIMER:
The use of this standard is governed by the "Texas Engineering Practice Act". No warranty of any kind is made by TxDOT for any purpose whatsoever. TxDOT assumes no responsibility for the conversion of this standard to other formats or for incorrect results or damages resulting from its use.

DATE: 5/11/2019
FILE: E:\OBES\CR 200\Documents\WA-4_CR201-BS\SHEETS\Standards\ErosionControl\ec916.dgn

AGENT AUTHORIZATION FORM
(TCEQ-0599)

Agent Authorization Form
For Required Signature
Edwards Aquifer Protection Program
Relating to 30 TAC Chapter 213
Effective June 1, 1999

I Judge Bill Gravell Jr.,
Print Name

County Judge,
Title - Owner/President/Other

of Williamson County,
Corporation/Partnership/Entity Name

have authorized Odalys C. Johnson, P.E., C.F.M.
Print Name of Agent/Engineer

of Jones|Carter
Print Name of Firm

to represent and act on the behalf of the above named Corporation, Partnership, or Entity for the purpose of preparing and submitting this plan application to the Texas Commission on Environmental Quality (TCEQ) for the review and approval consideration of regulated activities.

I also understand that:

1. The applicant is responsible for compliance with 30 Texas Administrative Code Chapter 213 and any condition of the TCEQ's approval letter. The TCEQ is authorized to assess administrative penalties of up to $10,000 per day per violation.

2. For those submitting an application who are not the property owner, but who have the right to control and possess the property, additional authorization is required from the owner.

3. Application fees are due and payable at the time the application is submitted. The application fee must be sent to the TCEQ cashier or to the appropriate regional office. The application will not be considered until the correct fee is received by the commission.

4. A notarized copy of the Agent Authorization Form must be provided for the person preparing the application, and this form must accompany the completed application.

5. No person shall commence any regulated activity on the Edwards Aquifer Recharge Zone, Contributing Zone or Transition Zone until the appropriate application for the activity has been filed with and approved by the Executive Director.

SIGNATURE PAGE:

Bill Gravell
Applicant's Signature

Date 9/1/2020

THE STATE OF Texas §

County of Williamson §

BEFORE ME, the undersigned authority, on this day personally appeared Bill Gravell known to me to be the person whose name is subscribed to the foregoing instrument, and acknowledged to me that (s)he executed same for the purpose and consideration therein expressed.

GIVEN under my hand and seal of office on this 1st day of September, 2020

Andrea L Schiele
NOTARY PUBLIC

ANDREA L. SCHIELE
NOTARY PUBLIC - STATE OF TEXAS
ID# 126562040
COMM. EXP. 02-23-2021

Andrea L. Schiele
Typed or Printed Name of Notary

MY COMMISSION EXPIRES: 2/23/2021

SITE PLAN

WILLIAMSON COUNTY

COUNTY ROAD 200
PRECINCT NUMBER 2

ROADWAY - CR 200 CLASSIFICATION - RURAL COLLECTOR DESIGN SPEED - 45 MPH

CR 200	ADT = 6,100 (2018)	ADT = 12,400 (2038)

ROADWAY	DHV (CURRENT)	DHV (DESIGN YEAR)

ROADWAY	DIRECTIONAL DISTRIBUTION (D)	PERCENT TRUCKS (T)

NET LENGTH OF ROADWAY = 5001.86 FT (0.947 MILES)
NET LENGTH OF BRIDGE = 0.00 FT (0.000 MILES)
NET LENGTH OF PROJECT = 5001.86 FT (0.947 MILES)

LIMITS: FROM APPROXIMATELY 400' NORTH OF SH 29 TO APPROXIMATELY 100' SOUTH OF CR 201

FOR THE RECONSTRUCTION OF THE EXISTING ROADWAY
CONSISTING OF GRADING, DRAINAGE IMPROVEMENTS, FLEXIBLE BASE,
MHACP, STRIPING AND PAVMENT MARKERS.

BEGIN PROJECT
STA. 104+32.50

END PROJECT
STA. 154+34.36

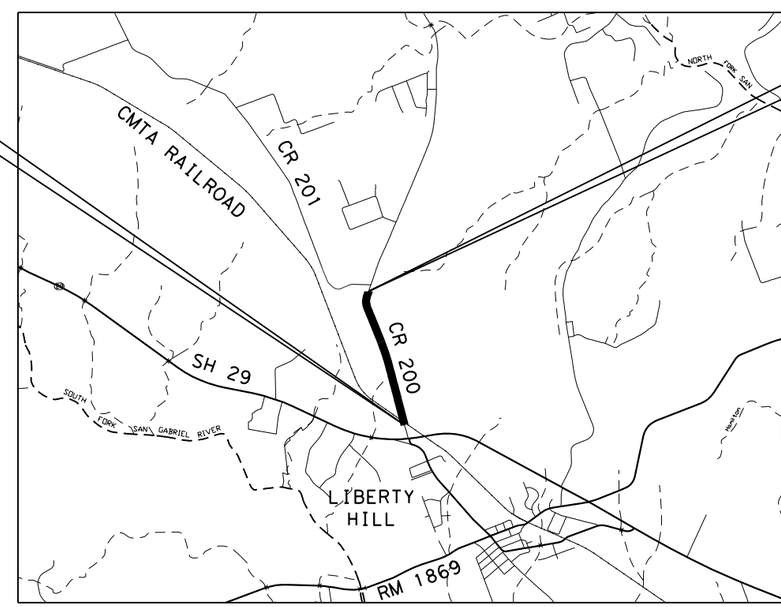

VICINITY MAP
N.T.S.

REGISTERED ACCESSIBILITY SPECIALIST (RAS) INSPECTION NOT REQUIRED.

REQUIRED SIGNS SHALL BE PLACED IN ACCORDANCE WITH STANDARD SHEETS BC(1)-14 THRU BC(12)-14 AND THE "TEXAS MANUAL ON UNIFORM TRAFFIC CONTROL DEVICES.:

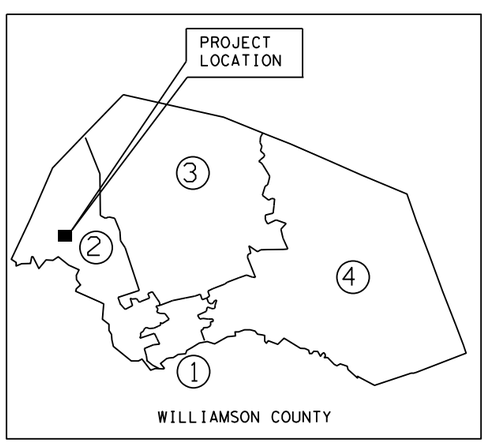

TxDOT STANDARD SPECIFICATIONS FOR CONSTRUCTION OF HIGHWAYS, STREETS AND BRIDGES ADOPTED ON NOVEMBER 1, 2014 AND ALL APPLICABLE SPECIAL PROVISIONS AND SPECIAL SPECIFICATIONS AS INDICATED IN THE BID DOCUMENTS SHALL GOVERN ON THIS PROJECT.

EXCEPTIONS: NONE
EQUATIONS: NONE
RAILROAD CROSSINGS: CMTA R.R. AT STA 105+93.25 (200)
WATERSHED: UNNAMED TRIBUTARY OF THE SOUTH FORK SAN GABRIEL RIVER
AREA OF DISTURBANCE: 12.48 Acres

PREPARED BY:
JONES CARTER
FIRM # F-439 (DESIGN CONSULTANT)

JONES|CARTER
Texas Board of Professional Engineers Registration No. F-439
6330 West Loop South, Suite 150 • Bellaire, Texas 77401 • 713.777.5337

J. KENT O'BRIEN
P.E. 64398 DATE

STATE OF TEXAS
J. KENT O'BRIEN
64398
REGISTERED PROFESSIONAL ENGINEER

WILLIAMSON COUNTY 1848

© 2019 Williamson County, Texas
All rights reserved.

APPROVED BY:
WILLIAMSON COUNTY

BILL GRAVELL, JR. DATE
WILLIAMSON COUNTY JUDGE

APPROVED BY:
WILLIAMSON COUNTY

COMMISSIONER CYNTHIA LONG DATE
WILLIAMSON COUNTY COMMISSIONER, PRECINCT 2

APPROVED BY:
HNTB CORPORATION

RICHARD L RIDINGS, PE DATE
ROAD BOND MANAGEMENT TEAM

INDEX OF SHEETS

SHEET	GENERAL
1	TITLE SHEET
2	INDEX OF SHEETS
3 - 4	PROJECT LAYOUT
5 - 7	TYPICAL SECTIONS
8A - 8J	GENERAL NOTES
9	ESTIMATE & QUANTITY SHEET
10 - 11	SUMMARY OF QUANTITIES
12	SUMMARY OF SMALL SIGNS
	TRAFFIC CONTROL PLAN
13	SEQUENCE OF CONSTRUCTION
14	ADVANCED WARNING SIGNS
14A	CULVERT 1 PHASE 1
14B	CULVERT 2 PHASE 1
15 - 17	PHASE 1
18 - 20	PHASE 2 STAGE 1
21 - 23	PHASE 2 STAGE 2
24 - 26	PHASE 3 STAGE 1
27 - 29	PHASE 3 STAGE 2
30 - 41	# BC(1)-14 THRU BC(120-14
42	# TREATMENT FOR VARIOUS EDGE CONSITIONS
43 - 44	# LPCB-13
45	# TCP(1-2)-12
46	# TCP(2-1)-12
47	# TCP(3-1)-13
48	# TCP(3-3)-14
49	# TCP(7-1)-13
50	# WZ(BRK)-13
51	# WZ(RS)-16
52	# WZ(STPM)-13
53	# WZ(UL)-13
	ROADWAY DETAILS
54 - 55	HORIZONTAL ALIGNMENT DATA
56 - 60	PLAN AND PROFILE
61 - 63	INTERSECTION DETAILS
64	DRIVEWAY DETAILS
65	# TAPERED EDGE DETAILS HMAC PAVEMENT
66	# CCCG-12
	DRAINAGE DETAILS
67	DRAINAGE AREA MAP
68 - 70	CULVERT LAYOUT
71	CULVERT SUMMARY AND DITCH CAPACITIES
72 - 73	RIPRAP DITCH DETAILS
74	# BCS
75 - 76	# MC-5-20
77	# MC-MD
78	# PB
79	# PAZD
80	# PDD
81	# SETP-PD
82 - 83	OMITTED
	TRAFFIC ITEMS
84 - 86	SIGNING & PAVEMENT MARKINGS
87	SIGNING DETAILS
88 - 89	# D&OM(1)-15 AND D&OM(2)-15
90	# D&OM(3)-15B
91 - 92	# D&OM(4)-15 AND D&OM(5)-15
93	OMITTED
94 - 96	# PM(1)-12 THRU PM(3)-12
97 - 98	# RCD(1)-16 & RCD(2)-16
99 - 100	# RS(3)-13 & RS(4)-13
101	# SMD(GEN)-08
102 - 104	# SMD(SLIP-1)-08 & SMD(SLIP-3)-08
105	# SMD(TWT)-08
106 - 107	# TSR(3)-13 & TSR(4)-13

SHEET	ENVIRONMENTAL ISSUES
108 - 111	STORM WATER POLUTION PREVENTION PLAN (SW3P)
112 - 114	# EC(1)-16 THRU EC(3)-16
115 - 117	# EC(9)-16
	MISCELLANEOUS
118 - 120	EXISTING UTILITIES
121	CMTA RR X-ING
	CROSS SECTIONS
XS1 - XS53	ROADWAY CROSS SECTIONS

THE STANDARD SHEETS SPECIFICALLY IDENTIFIED HERE HAVE BEEN SELECTED BY ME OR UNDER MY RESPONSIBLE SUPERVISION AS BEING APPLICABLE TO THIS PROJECT.

STATE OF TEXAS
J. KENT O'BRIEN
64398
REGISTERED PROFESSIONAL ENGINEER

5/9/2019

WILLIAMSON COUNTY 1848

WILLIAMSON COUNTY PRECINCT #2

JONES|CARTER
Texas Board of Professional Engineers Registration No. F-439
6330 West Loop South, Suite 150 • Bellaire, Texas 77401 • 713.777.5337

WSB & ASSOCIATES, INC.
FIRM # 16849

CR 200
FROM CMTA R.R. TO CR 201

INDEX OF SHEETS

SHEET 1 OF 1 | SHEET # 2

CR200.PDF - GS.pltcfg
ExCR200
11:43:11 AM
5/11/2019
E:\OBES\CR 200\Documents\WA-44\CR201-BS\SHEETS\General\CR200-WA4a-Index.dgn

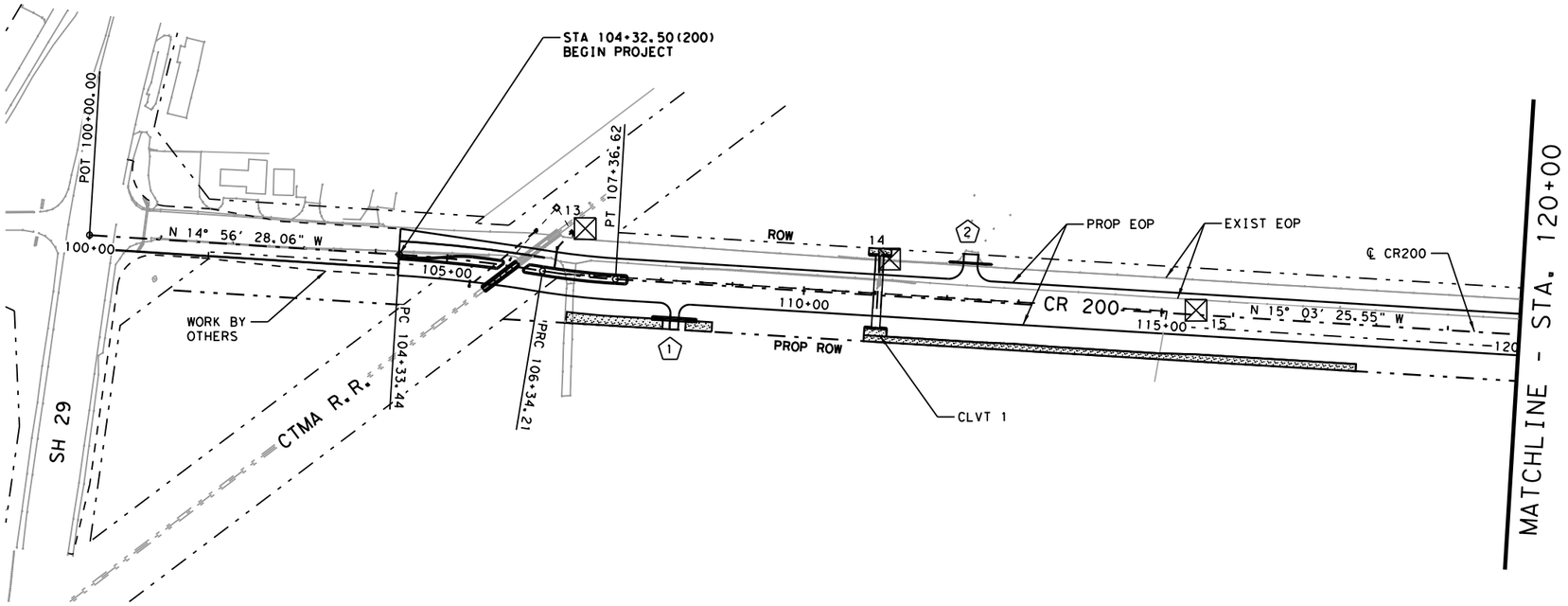

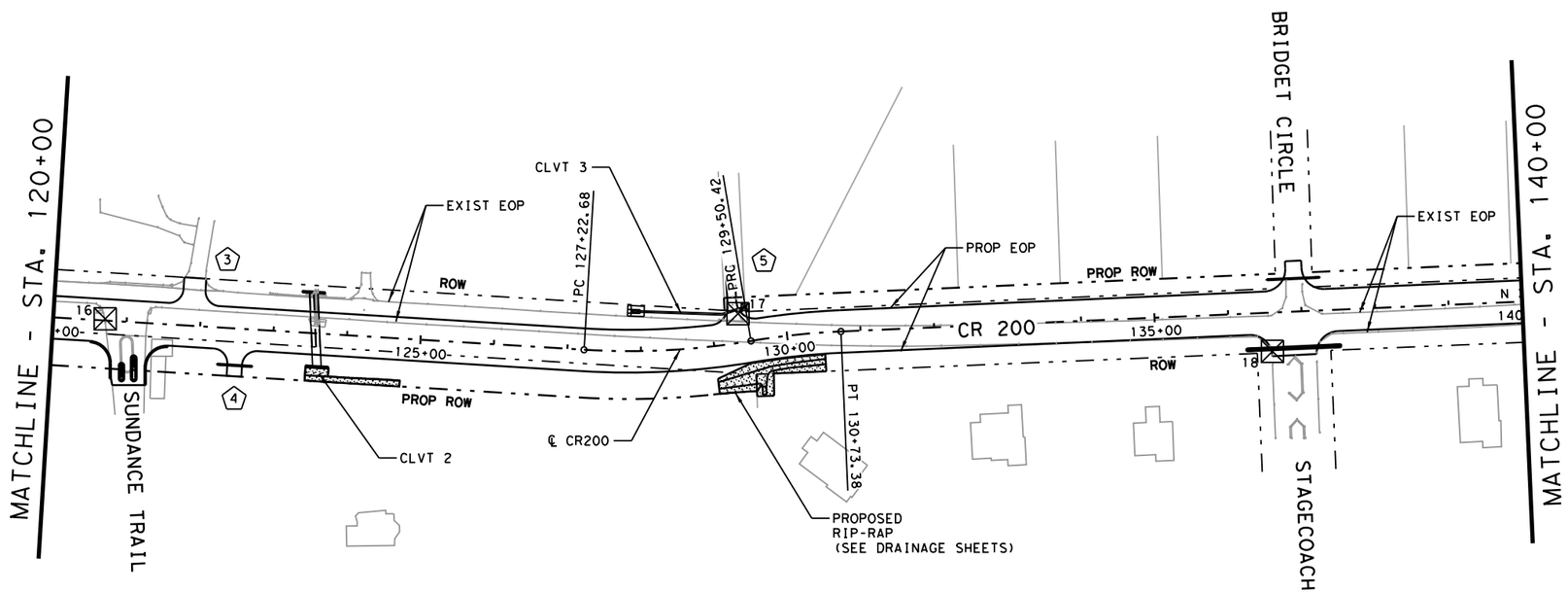

0 100 200
SCALE: 1"=200'

LEGEND:

- DRIVEWAY NUMBER
- DIRECTION OF TRAFFIC
- CONTROL POINTS n=POINT NO.
- RIP-RAP

NOTES:

1. SEE PROJECT LAYOUT SHEET 2 OF 2 FOR CONTROL POINT DATA.
2. SEE DRIVEWAY DETAIL SHEET FOR DRIVEWAY DATA.
3. SEE DRAINAGE SHEETS FOR CULVERT AND SPECIAL DRAINGE FEATURE DATA.

STATE OF TEXAS
DANIEL A. ROGERS
88794
LICENSED
PROFESSIONAL ENGINEER

5/9/2019

WILLIAMSON COUNTY PRECINCT #2

JONES|CARTER
Texas Board of Professional Engineers Registration No. F-439
6330 West Loop South, Suite 150 • Bellaire, Texas 77401 • 713.777.5337

WSB & ASSOCIATES, INC.
FIRM # 16849

CR 200
FROM CMTA R.R. TO CR 201

PROJECT LAYOUT

SHEET 1 OF 2 | SHEET # 3

$PLTDRVS$
12:05:35 PM
5/9/2019
K:\01\028.000\Cad\Plan\WA44-PL401.dgn

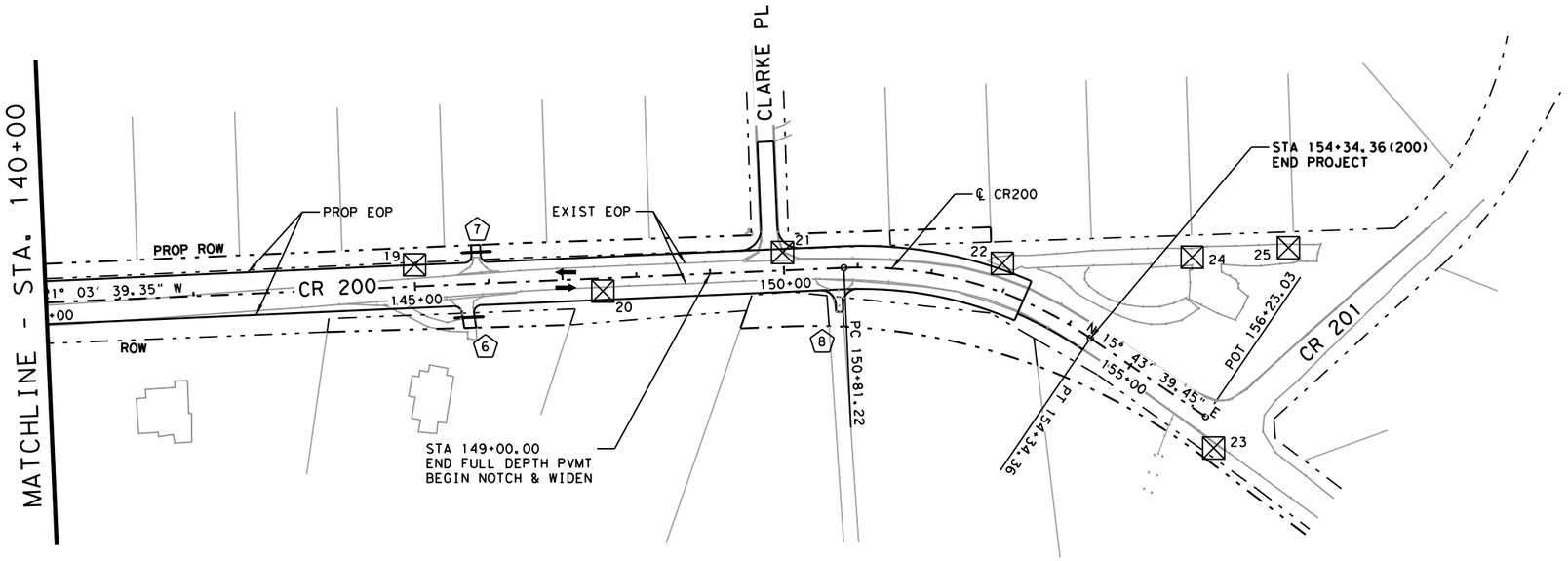

0 100 200
SCALE: 1"=200'

LEGEND:

- DRIVEWAY NUMBER
- DIRECTION OF TRAFFIC
- CONTROL POINTS n=POINT NO.
- RIP-RAP

1. SEE DRIVEWAY DETAIL SHEET FOR DRIVEWAY DATA.
2. SEE DRAINAGE SHEETS FOR CULVERT AND SPECIAL DRAINGE FEATURE DATA.

HORIZONTAL AND VERTICAL CONTROL DATA

POINT	X	Y	ELEV.	DESC.
CTRL13	3,051,673.9600	10,219,454.4000	1,055.3000	IRSC
CTRL14	3,051,579.0600	10,219,870.1900	1,055.9900	IRSC
CTRL15	3,051,510.7700	10,220,298.3800	1,056.5900	IRSC
CTRL16	3,051,378.7500	10,220,804.2200	1,058.9700	MAG
CTRL17	3,051,098.4400	10,221,617.5100	1,064.9900	IRSC
CTRL18	3,050,915.5600	10,222,322.1000	1,082.7300	MAG
CTRL19	3,050,536.3900	10,223,079.0400	1,104.2700	IRSC
CTRL20	3,050,489.0900	10,223,331.9900	1,107.8000	IRSC
CTRL21	3,050,362.1000	10,223,546.0500	1,108.4600	MAGNL
CTRL22	3,050,281.3100	10,223,832.8800	1,107.8500	SPIN
CTRL23	3,050,427.0800	10,224,183.6100	1,097.9500	IRSC
CTRL24	3,050,191.4600	10,224,073.9000	1,106.0700	MAG
CTRL25	3,050,138.0500	10,224,193.3400	1,106.2500	60D

ALL BEARINGS ARE BASED ON THE TEXAS STATE PLANE COORDINATE SYSTEM, CENTRAL ZONE, NAD-83(93). ALL DISTANCES AND COORDINTES ARE ADJUSTED TO THE SURFACE BY THE PROJECT SURFACE ADJUSTMENT FACTOR OF 0.99985.

STATE OF TEXAS
DANIEL A. ROGERS
88794
LICENSED
PROFESSIONAL ENGINEER

5/9/2019

WILLIAMSON COUNTY 1848

WILLIAMSON COUNTY PRECINCT #2

JONES|CARTER
Texas Board of Professional Engineers Registration No. F-439
6330 West Loop South, Suite 150 • Bellaire, Texas 77401 • 713.777.5337

wsb
WSB & ASSOCIATES, INC.
FIRM # 16849

CR 200
FROM CMTA R.R. TO CR 201

PROJECT LAYOUT

SHEET 2 OF 2 | SHEET # 4

$PLTDRVS$
12:05:36 PM
5/9/2019
K:\017028-000\Cad\Plan\WA4A-PL-02.dgn

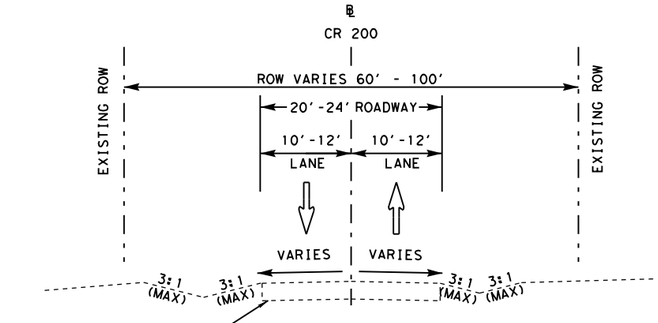

CR 200 TYPICAL SECTION

EXISTING SECTION

STA 104+32.50 TO STA 153+30.00

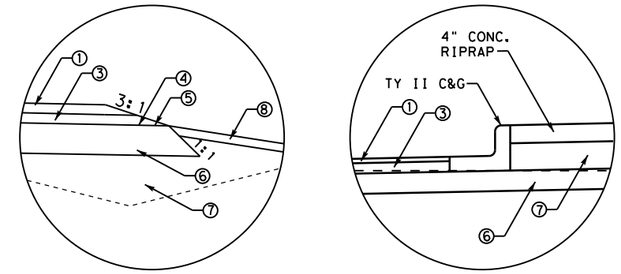

DETAIL "A" DETAIL "B"

① 2" HMACP (TY D)(SAC-B)
② HMACP (TY C) (LEVEL-UP, 1"-3")
③ 4" HMACP (TY B)
④ PRIME COAT
⑤ SEAL COAT
⑥ 12" FLEX BASE IN
(2 EQUAL LIFTS)
⑦ TY "C" EMBANKMENT
⑧ TOPSOIL

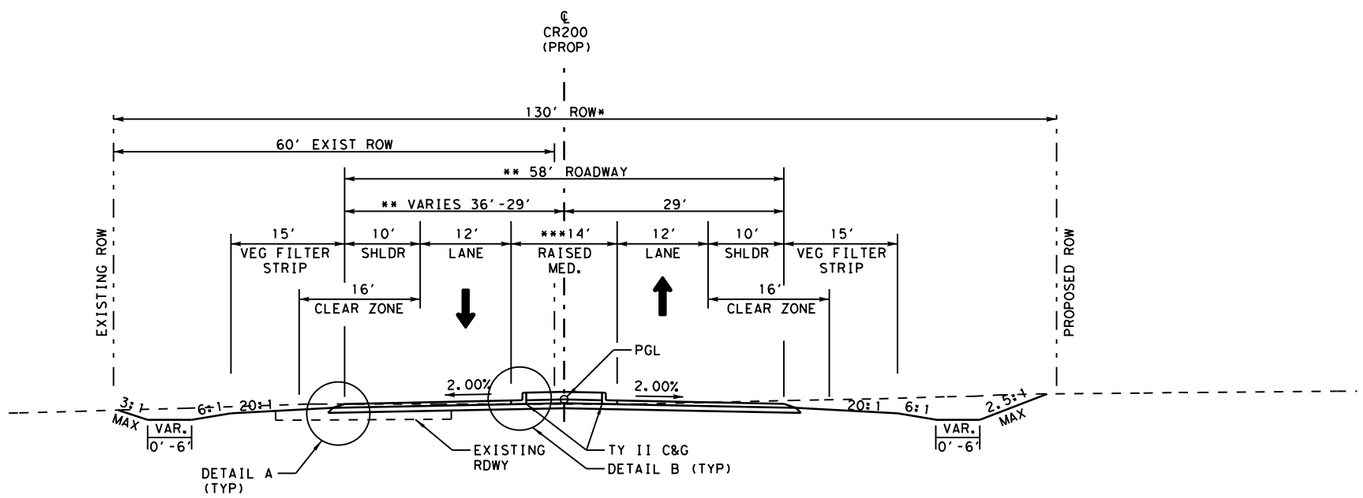

CR 200 TYPICAL SECTION

PROPOSED SECTION

STA 104+32.50 TO STA 107+54.00

* CMTA R.R. ROW VARIES, STA 104+43.14 TO STA 107+35.74
** ROADWAY VARIES 63'-58', STA 104+32.50 TO STA 105+98.40
*** VARIES 5'-14', STA 104+32.50 TO STA 105+35.00

STATE OF TEXAS
DANIEL A. ROGERS
88794
LICENSED
PROFESSIONAL ENGINEER

5/9/2019

WILLIAMSON COUNTY 1848

WILLIAMSON COUNTY PRECINCT #2

JONES|CARTER
Texas Board of Professional Engineers Registration No. F-439
6330 West Loop South, Suite 150 • Bellaire, Texas 77401 • 713.777.5337

wsb
WSB & ASSOCIATES, INC.
FIRM # 16849

CR 200
FROM CMTA R.R. TO CR 201

TYPICAL SECTIONS

SHEET 1 OF 3 | SHEET # 5

$PLTDRVS$
12:05:37 PM
5/9/2019
xs\101628-000\Cad\Plan\CR200-WA4G-TYP-01.dgn

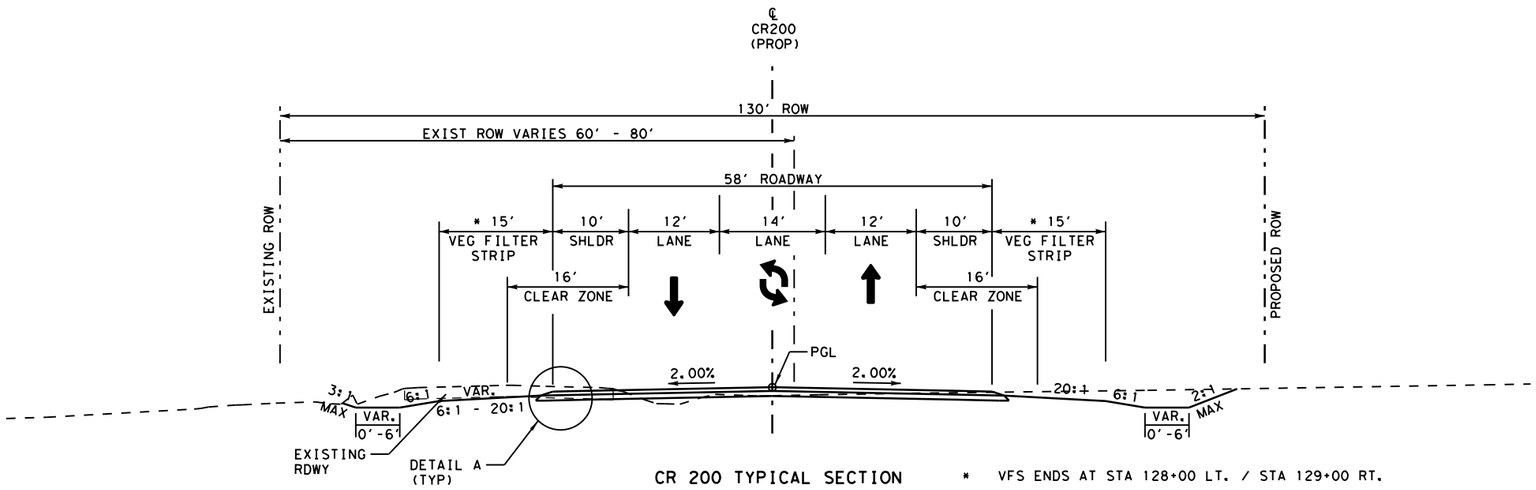

CR 200 TYPICAL SECTION
PROPOSED SECTION
STA 107+54.00 TO STA 128+91.52

* VFS ENDS AT STA 128+00 LT. / STA 129+00 RT.

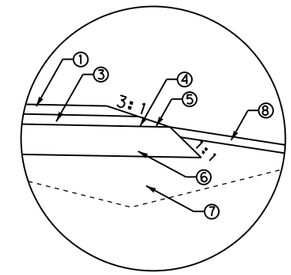

DETAIL "A"

① 2" HMACP (TY D)(SAC-B)
② HMACP (TY C) (LEVEL-UP, 1"-3")
③ 4" HMACP (TY B)
④ PRIME COAT
⑤ SEAL COAT
⑥ 12" FLEX BASE IN
(2 EQUAL LIFTS)
⑦ TY "C" EMBANKMENT
⑧ TOPSOIL

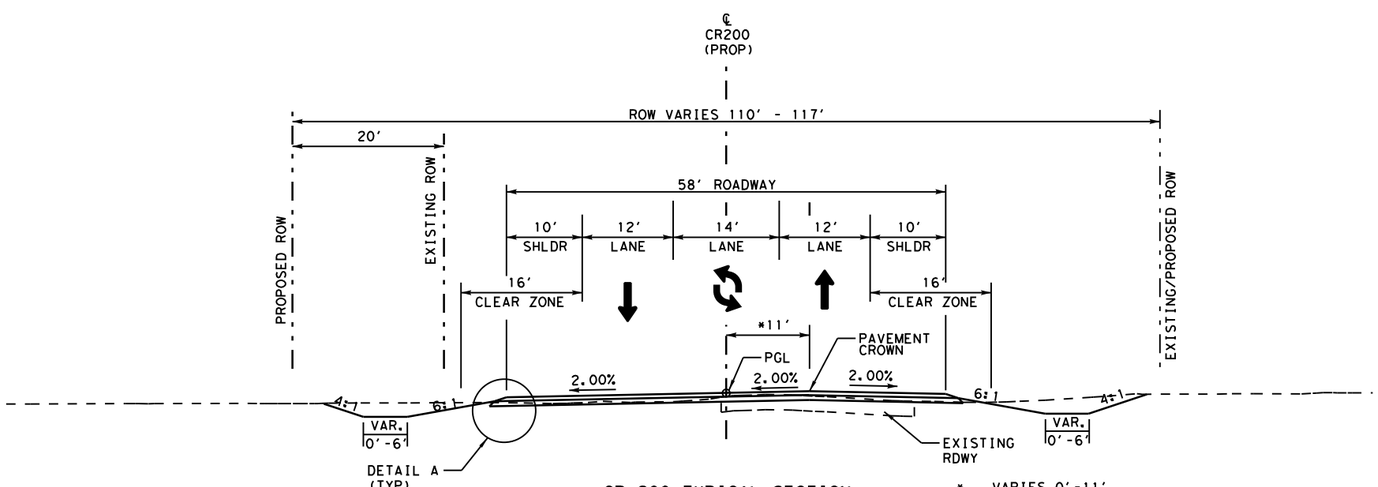

CR 200 TYPICAL SECTION
PROPOSED SECTION
STA 128+91.52 TO 149+00.00

* VARIES 0'-11',
STA 128+91.52 TO STA 130+73.39
VARIES 11'-0'
STA 149+00.00 TO STA 149+75.00

STATE OF TEXAS
DANIEL A. ROGERS
88794
LICENSED
PROFESSIONAL ENGINEER

5/9/2019

WILLIAMSON COUNTY PRECINCT #2

JONES|CARTER
Texas Board of Professional Engineers Registration No. F-439
6330 West Loop South, Suite 150 • Bellaire, Texas 77401 • 713.777.5337

WSB & ASSOCIATES, INC.
FIRM # 16849

CR 200
FROM CMTA R.R. TO CR 201

TYPICAL SECTIONS

SHEET 2 OF 3 | SHEET # 6

$PLTDRV$$
12:05:39 PM
5/9/2019
K:\011228.000\Cad\Plan\CR200-WA4a-TYP-02.dgn

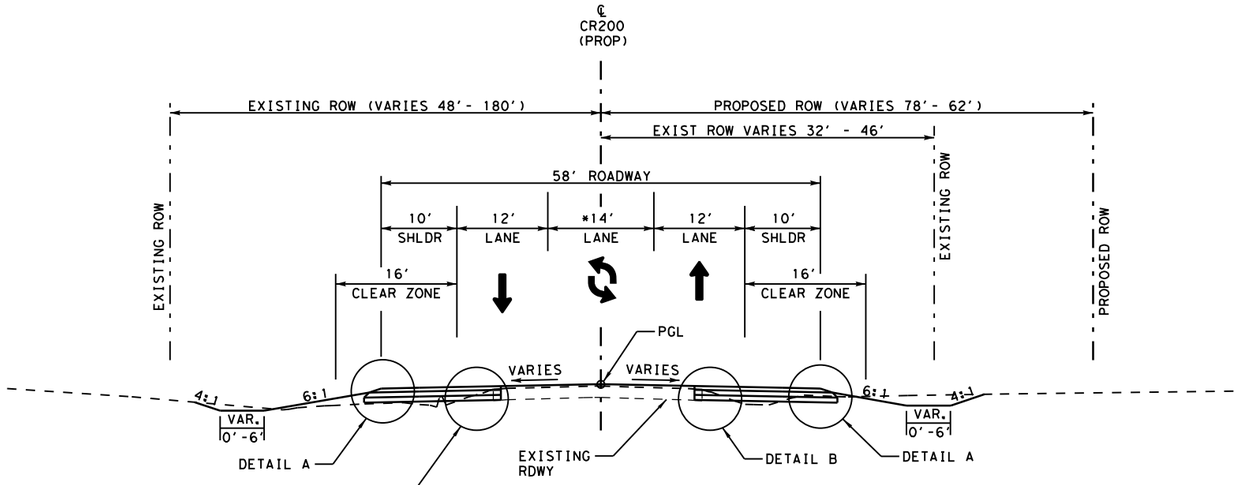

CR 200 TYPICAL SECTION
PROPOSED SECTION
STA 149+00.00 TO STA 153+30.00

* MED VARIES 14'-12'
STA 152+72.25 TO STA 153+30.00

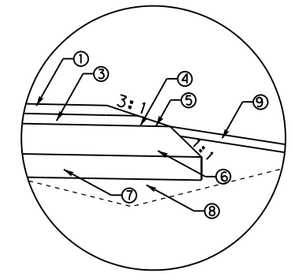

DETAIL "A"

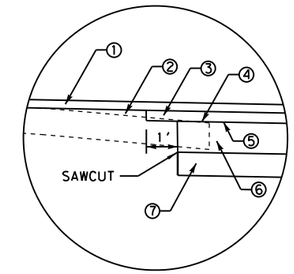

DETAIL "B"

① 2" HMACP (TY D)(SAC-B)
② HMACP (TY C) (LEVEL-UP, 1"-3")
③ 4" HMACP (TY B)
④ PRIME COAT
⑤ SEAL COAT
⑥ 12" FLEX BASE (2 EQUAL LIFTS)
⑦ 8" LIME TREATED SUBGRADE
⑧ TY "C" EMBANKMENT
⑨ TOPSOIL

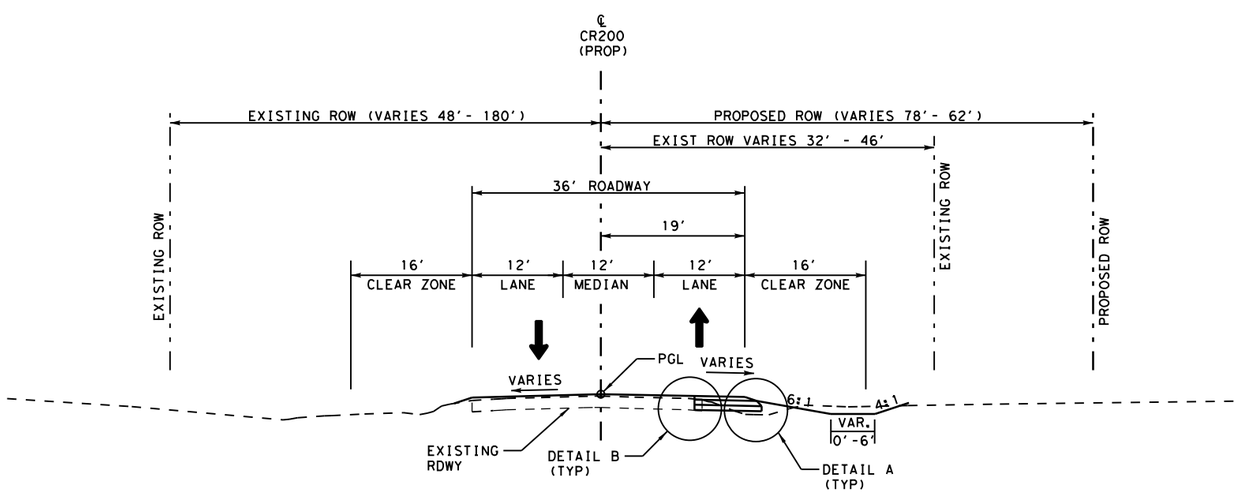

CR 200 TYPICAL SECTION
PROPOSED SECTION
STA 153+30.00 TO STA 154+34.36

STATE OF TEXAS
DANIEL A. ROGERS
88794
LICENSED
PROFESSIONAL ENGINEER

5/9/2019

WILLIAMSON COUNTY PRECINCT #2

JONES|CARTER
Texas Board of Professional Engineers Registration No. F-439
6330 West Loop South, Suite 150 • Bellaire, Texas 77401 • 713.777.5337

WSB & ASSOCIATES, INC.
FIRM # 16849

CR 200
FROM CMTA R.R. TO CR 201

TYPICAL SECTIONS

SHEET 3 OF 3 | SHEET # 7

$PLTDRVS$
12:05:40 PM
5/9/2019
K:\017228.000\Cad\Plan\CR200-WA4a-TYP-03.dgn

Williamson County **Sheet:**
Project:

GENERAL NOTES: April 9, 2019 Version

Basis of Estimate

Item	Description	**Rate	Basis	Quantity
160	**Furnishing and Placing Topsoil (4")**	1 CY/9 SY	27589SY	SY
161	**Erosion Control Compost (3")**	1 CY/12 SY	6897SY	SY
162	**Mulch Topdressing (5")**	1 CY/7 SY	6897SY	SY
164	**Seed for Erosion Control** (Item 164) (Temp) (Cool) (TY 4) (Item 164) (Perm) (Warm) (TY 5) (Item 164) (Temp) (Warm) (TY 10)	 4840 SY/AC 4840 SY/AC 4840 SY/AC	 13795SY 27589SY 13795SY	 SY SY SY
166	**Fertilizer (13-13-13)**	1/8 LB/SY	27589SY	1.72TON
168	**Vegetative Watering** (Item 162) (Item 164) (Temp) (Item 164) (Perm)	 20 GAL/SY 10 GAL/SY 20 GAL/SY	 27589SY 13795SY 27589SY	 MG MG MG
**204	**Sprinkling** (Dust) (Item 132) (Item 247)	 30 GAL/CY 30 GAL/CY 30 GAL/CY	 13747CY 3312CY 10435CY	 GAL GAL GAL
**210	**Roll (Flat Wheel)** (Item 247) (Item 316)	 1 HR/200 TON 1 HR/6000 SY	 18595TON 30605SY	 93HR 5HR
**210	**Roll (Tamping)** (Item 132)	 1 HR/200 CY	 3392CY	 17HR
**210	**Roll (Heavy Tamp)** (Item 132)	 1 HR/200 CY	 3392CY	 17HR
**210	**Roll (Lt Pneu Tire)** (Item 132) (Item 247) (Item 316) (One Course)	 1 HR/500 CY 1 HR/200 TON 1 HR/6000 SY	 3392CY 18595TON 30605SY	 7HR 93HR 5HR
247	**FL BS (CMP IN PLC)** (TY A GR 4) (TY A GR 4) (TY A GR 4)	 132 LB/CF 3564 LB/CY 27 CF/CY	 CF 10435CY CF	 TON 18595TON CY
310	**Prime Coat (Multi Option)**	0.20 GAL/SY	31160SY	6232GAL
316	**Surface Treatments** **One Course Surface Treatment:** Asphalt Aggregate (Ty D, GR 5)	 Total 0.30 GAL/SY 1 CY/115 SY	 31158SY 31158SY	 9282GAL 266CY
340	**Dense-Graded Hot-Mix Asphalt (SQ)** TY C PG 64-22 (LEVEL-UP)	 115 LB/SY/IN	 SY	 22TON

General Notes Sheet A

Williamson County **Sheet:**
Project:

Item	Description	**Rate	Basis	Quantity
341	**Dense-Graded Hot-Mix Asphalt** TY B PG 64-22 TY D PG 70-22	 115 LB/SY/IN 115 LB/SY/IN	 30605SY 32022SY	 7039TON 3683TON

** For Informational Purposes Only

General Notes Sheet B

STATE OF TEXAS
J. KENT O'BRIEN
64398
REGISTERED PROFESSIONAL ENGINEER
5/9/2019

WILLIAMSON COUNTY 1848

WILLIAMSON COUNTY PRECINCT #2

JONES|CARTER
Texas Board of Professional Engineers Registration No. F-439
6330 West Loop South, Suite 150 • Bellaire, Texas 77401 • 713.777.5337

WSB & ASSOCIATES, INC.
FIRM # 16849

CR 200
FROM CMTA R.R. TO CR 201

GENERAL NOTES

SHEET 1 OF 10 | SHEET # 8A

CR200_PDF - GS.pltcfg
ExCR200
11:43:11 AM
5/1/2019
E:\QBES\CR 200\Documents\WA-4+CR201-BS\SHEETS\General\CR200-WA4g-GN01.dgn

MODIFIED STANDARDS
The following standard detail sheet or sheets have been modified:

NONE

GENERAL
References to manufacturer's trade name or catalog numbers are for the purpose of identification only. Similar materials from other manufacturers are permitted if they are of equal quality, comply with the specifications for this project, and are approved.

If work is performed at Contractor's option, when inclement weather is impending, and the work is damaged by subsequent precipitation, the Contractor is responsible for all costs associated with replacing the work, if required.

The roadbed shall be free of organic material prior to placing any section of the pavement structure.

Equip all construction equipment used in roadway work with highly visible omnidirectional flashing warning lights.

Provide a smooth, clean saw-cut along the existing asphalt pavement structure, as directed. Consider subsidiary to the pertinent Items.

Supply litter barrels in enough numbers at locations as directed to control litter within the project. Consider subsidiary to pertinent Items.

Use a self-contained vacuum broom to sweep the roadway and keep it free of sediment as directed. The contractor will be responsible for any sweeping above and beyond the normal maintenance required to keep fugitive sediment off the roadway as directed by the Construction Observer.

Protect all areas of the right of way, which are not included in the actual limits of the proposed construction areas, from disturbance. Restore any area disturbed because of the Contractor's operations to a condition as good as, or better than, before the beginning of work at no cost to the state.

Damage to existing pipes and SETs due to Contractor operations shall be repaired at Contractor's expense.

All locations used for storing construction equipment, materials, and stockpiles of any type, within the right of way, will be as directed. Use of right of way for these purposes will be restricted to those locations where driver sight distance to businesses and side street intersections is not obstructed and at other locations where an unsightly appearance will not exist. The Contractor will not have exclusive use of right of way but will cooperate in the use of the right of way with the city/county and various public utility companies as required.

The Project Superintendent will be capable of speaking English and will be available to conatact at all times when work is being performed, including subcontractor work. The Superintendent will be available and on-call 24 hours a day.

Coordinate and obtain approval from the Construction Observer for all bridgework over existing roadways.

Measure all minimum vertical clearances for all structures (including, but not limited to, signal mast arms, span wires, and overhead sign bridge structures) within the limits of the project for all roadway alignments in all directions of travel. Coordinate with the Construction Observer to take these measurements and obtain prior to opening roadways to traffic unless otherwise approved. The Construction Observer will report all minimum vertical clearance information on State maintained roadways to the local bridge engineer at AUS_BRG_notify@txdot.gov..

Use materials from prequalified material producers list as shown on the Texas Department of Transportation (TxDOT) – Construction Division's (CST) materials producers list. Refer to TxDOT's website for list of pre-qualified manufacturers. No substitutions will be allowed for materials found on the list. Submit list of approved suppliers/materials from TxDOT website to show items are TxDOT approved. Submit this list with request for material approval.

When any abandoned well is encountered, cease construction operations in this area and notify the Engineer who will coordinate the proper plugging procedures. A water well driller licensed in the State of Texas must be used to plug a well.

Erosion control and stabilization measures must be initiated immediately in portions of the site where construction activities have temporarily ceased and will not resume for a period exceeding 14 calendar days. Track all exposed soil, stockpiles, and slopes. Tracking consists of operating a tracked vehicle or equipment up and down the slope, leaving track marks perpendicular to the direction of the slope. Re-track slopes and stockpiles after each rain event or every 14 days, whichever occurs first. This work is subsidiary.

Perform maintenance of vehicles or equipment at designated maintenance sites. Keep a spill kit on-site during fueling and maintenance. This work is subsidiary.

Maintain positive drainage for permanent and temporary work for the duration of the project. Be responsible for any items associated with the temporary or interim drainage and all related maintenance. This work is subsidiary.

Suspend all activities near any significant recharge features, such as sinkholes, caves, or any other subterranean openings that are discovered during construction or core sampling. Do not proceed until the designated Geologist or TCEQ representative is present to evaluate and approve remedial action.

Locate aboveground storage tanks kept on-site for construction purposes in a contained area as to not allow any exposure to soils. The containment will be sized to capture 150% of the total capacity of the storage tanks.

STATE OF TEXAS
J. KENT O'BRIEN
64398
REGISTERED PROFESSIONAL ENGINEER
5/9/2019

WILLIAMSON COUNTY 1848
WILLIAMSON COUNTY PRECINCT #2

JONES|CARTER
Texas Board of Professional Engineers Registration No. F-439
6330 West Loop South, Suite 150 • Bellaire, Texas 77401 • 713.777.5337

WSB & ASSOCIATES, INC.
FIRM # 16849

CR 200
FROM CMTA R.R. TO CR 201

GENERAL NOTES

SHEET 2 OF 10 | SHEET # 8B

CR200_PDF - GS.pltcfg
Ex=CR200
11:43:18 AM
5/1/2019
E:\QBES\CR 200\Documents\WA-4+CR201-BS\SHEETS\General\CR200-WA4G-GN02.dgn

Project Specific Location (PSL) in Edwards Aquifer Recharge and Contributing Zone.
Obtain written approval from the Engineer for all on or off ROW PSL's not specifically addressed in the plans. Provide a signed SW3P sketch of the location, thirty (30) business days prior to use of the PSL. Include a list of materials, equipment and portable facilities that will be stored at the PSL.

Project Specific Location (PSL) in USACE Jurisdictional Area.
Do not initiate activities in a PSL associated with a U.S. Army Corps of Engineers (USACE) jurisdictional area that have not been previously evaluated by the USACE as part of the permit review of this project. Such activities include, but are not limited to, haul roads, equipment staging areas, borrow and disposal sites. Associated defined here means materials are delivered to or from the PSL. The jurisdictional area includes all waters of the U.S. including wetlands or associated wetlands affected by activities associated with this project. Special restrictions may be required for such work. Consult with the USACE regarding activities, including PSLs that have not been previously evaluated by the USACE. Provide the Department with a copy of all USACE coordination and approvals before initiating activities.

Proceed with activities in PSLs that do not affect a USACE jurisdictional area if self-determination has been made that the PSL is non-jurisdictional or proper clearances have been obtained in USACE jurisdictional areas or have been previously evaluated by the USACE as part of the permit review of this project. Document any determinations that PSL activities do not affect a USACE jurisdictional area. Maintain copies of PSL determinations for review by the Department or any regulatory agency. The Contractor must document and coordinate with the USACE, if required, before any excavation material hauled from or embankment material hauled into a USACE jurisdictional area by either (1) or (2) below.

1. Restricted Use of Materials for the Previously Evaluated Permit Areas. When an area within the project limits has been evaluated by the USACE as part of the permit process for this project:
    a. suitable excavation of required material in the areas shown on the plans and cross sections as specified in Standard Specification Item 110, Excavation is used for permanent or temporary fill within a USACE jurisdictional area;
    b. suitable embankment from within the USACE jurisdictional area is used as fill within a USACE evaluated area;
    c. Unsuitable excavation or excess excavation that is disposed of at an approved location within a USACE evaluated area.
2. Contractor Materials from Areas Other than Previously Evaluated Areas. Provide the Department with a copy of all USACE coordination and approvals before initiating any activities in a jurisdictional area within the project limits that has not been evaluated by the USACE or for any off right of way locations used for the following, but not limited to, haul roads, equipment staging areas, borrow and disposal sites:
    a. Standard Specification Item 132, Embankment is used for temporary or permanent fill within a USACE jurisdictional area;
    b. Unsuitable excavation or excess excavation that is disposed of outside a USACE evaluated area.

Work over or near Bodies of Water (Lakes, Rivers, Ponds, Creeks, etc.).
Keep on site a universal spill kit adequate for the body of water and the work being performed. No debris is allowed to fall into a body of water. Debris that falls into the water must be removed at the end of each work day. Debris that falls into the floodway must be removed at the end of each work week or prior to a rain event. This work is subsidiary.

DSHS Asbestos and Demolition Notification.
Complete and provide the Texas Department of State Health Services (DSHS) notification form to the Engineer at least 30 calendar days prior to bridge or bridge class culvert removal or renovation. Notify the Construction Observer via email of any changes to the work start date.

Migratory Birds and Bats.
Migratory birds may be nesting within the project limits and concentrated on roadway structures such as bridges and culverts. Remove all old and unoccupied migratory bird nests from any structures, trees, etc. between September 16thand February 28th. Prevent migratory birds from re-nesting between March 1st and September 15th.

All methods used for the removal of unoccupied bird nests and the prevention of re-nesting must be submitted to the construction Observer for approval thirty days prior to begin work.

In the event that any active nests are encountered on-site during construction, all construction activity within 50 feet radius of the nest must cease immediately. Contact the Construction Observer to determine how to proceed.

Bats may roost within the project limits under bridges, in culverts, in large hollow trees, in dead standing trees, and in trees with shaggy bark. Maternity colonies may occur from April 1st through August 31st. If bats are present, ensure bats are not harmed. Exclusion protocols for known colonies should be followed well in advance of commencement of construction activities. Exclusion measures by qualified individuals are used to relocate existing colonies, except from April 1st through August 31st when such measures may separate mothers and pups. Exclusion measures are also the means of preventing establishment of new colonies and re-establishment of relocated colonies.

No extension of time or compensation payment will be granted for a delay or suspension of work caused by migratory birds or bats. This work is subsidiary.

Law Enforcement Personnel.
If a law enforcement officer is required, patrol vehicles must be clearly marked to correspond with the officer's agency and equipped with appropriate lights to identify them as law enforcement. A maximum combined rate of $70 per hour for the officer and vehicle will be allowed. Preference will be given to Williamson County officers or officers in local jurisdiction. No payment will be made for law enforcement used for moving contractor equipment.

ITEM 100 – PREPARING RIGHT OF WAY
Do not burn brush, unless otherwise approved.

STATE OF TEXAS
J. KENT O'BRIEN
64398
REGISTERED PROFESSIONAL ENGINEER
5/9/2019

WILLIAMSON COUNTY 1848
WILLIAMSON COUNTY PRECINCT #2

JONES|CARTER
Texas Board of Professional Engineers Registration No. F-439
6330 West Loop South, Suite 150 • Bellaire, Texas 77401 • 713.777.5337

WSB & ASSOCIATES, INC.
FIRM # 16849

CR 200
FROM CMTA R.R. TO CR 201

GENERAL NOTES

SHEET 3 OF 10 | SHEET # 8C

CR200.PDF - GS.pltcfg
ExCR200
11:43:25 AM
5/11/2019
E:\OBES\CR 200\Documents\WA-44\CR201-BS\SHEETS\General\CR200-WA4G-GN03.dgn

Trim vegetation around signs and other obstructions. Consider subsidiary to pertinent Items.

Use hand methods or other means to remove objectionable material and obstructions, if doing work by mechanical methods is impractical. Consider subsidiary to the pertinent Items.

ITEM WC101 – SOIL RIPPING
Soil Ripping, as required for all projects in Special Specification WC101, shall be accomplished using the following values:

Spacing for slopes between 3:1 and 4:1, groves should be 16 inches on center.

For slopes flatter than 4:1, groves should be 12 inches on center.

Depth of compacted soils should be ripped to a depth of 18 inches. When embankment stabilization is a concern, ripping depth can be reduced to 12 inches.

ITEM 110 & 132 – EXCAVATION & EMBANKMENT
Unsuitable material encountered in a cut or fill section will be considered waste. The Construction Observer will define unsuitable material. Material, which the Contractor might deem to be unsatisfactory or unsuitable, due to moisture content, will not be considered unsuitable material, unless otherwise approved.

Obtain approval of all compaction equipment prior to all backfilling and embankment operations.

ITEM 132 – EMBANKMENT
The underlying layer or existing subgrade must be prepared and inspected prior to placement of the embankment. Proof roll the pavement area according to Item 216 prior to placement of embankment or subsequent layers. Payment for proof rolling will be subsidiary to the various bid Items of the contract.

Correct unstable material (e.g. dry, wet, loose, etc.) to a depth of six (6) inches below existing grade. This work will be considered subsidiary to pertinent bid Items. Drying required deeper than six (6) inches below existing grade will be paid for in accordance with Item 6.03, "Extra Work." However, there will be no payment to correct failures in the subgrade areas that were constructed under this contract.

ITEM 132 – EMBANKMENT TY C
The Construction Observer must approve the embankment material before use on the project.

Existing material located within the project limits may be used as embankment if it meets specifications shown on the plans and if approved by the Construction Observer.

If delivery from offsite source is necessary, furnish embankment with a PI of less than 25 that does not contain sulfate contents greater than 3000 ppm.

Meet the following select embankment (TY C) requirements when used as subgrade directly beneath flexible and/ or rigid pavement sections to depths specified in the typical section.

Embankment Material Requirements – Item 132 [TY C)

Item	Description	(Percent Retained-Sieve)					LL	PI	PI
		1¾"	7/8"	3/8"	#4	#40	Max.	Max.	Min.
132	Embankment (Density Control) (TY C1)	0-10	10-20	-	45-75	60-85	45	20	6
132	Embankment (Ordinary Compaction) (TY C2)	0-10	10-20	-	45-75	50-85	55	25	8

Stockpile imported TY C embankment at an approved location until it meets all testing requirements. The stockpile must be between 500 CY and 5000 CY and must not exceed a height of 15 ft. It is the Contractor's responsibility to identify and notify the Construction Observer of the location of the borrow source to allow time for testing and approval to avoid delay to the project. Allow a minimum of five (5) working days for testing.

ITEM 160 – TOPSOIL
No sandy loam allowed. Obtain approval of the actual depth of the topsoil sources for both on-site and off-site sources.

ITEM 169 – SOIL RETENTION BLANKETS
Use materials from prequalified material producers list as shown on the Texas Department of Transportation (TxDOT) – Construction Divisions (CST) materials producers list. Refer to TxDOT's website for list of pre-qualified manufacturers. Direct all questions to the Maintenance Division, Vegetation Management Section, 125 E. 11th Street, Austin, TX 78701-2483.

ITEM 204 – SPRINKLING
Apply water for dust control as directed. When dust control is not being maintained, cease operations until dust control is maintained. Consider subsidiary to the pertinent Items.

ITEM 216 – PROOF ROLLING
Correct and perform "Proof Rolling" retest at the Contractor's expense, to the satisfaction of the Construction Observer, when initial "Proof Rolling" yields a failing result.

ITEM 247 – FLEXIBLE BASE
Furnish Type A material.

Furnish flexible base meeting Grade 4 requirements.

The lift thickness shall be 4" to 6", unless shown otherwise in plans.

The following table will govern the acceptance of compaction on base courses, when compacted in multiple courses. Compaction requirements are in percent of maximum dry density as determined by (Tex-113-E). When compacting in a single course, compact to at least 100% of maximum dry density as determined by Tex-113-E.

STATE OF TEXAS
J. KENT O'BRIEN
64398
REGISTERED PROFESSIONAL ENGINEER
5/9/2019

WILLIAMSON COUNTY 1848
WILLIAMSON COUNTY PRECINCT #2

JONES|CARTER
Texas Board of Professional Engineers Registration No. F-439
6330 West Loop South, Suite 150 • Bellaire, Texas 77401 • 713.777.5337

WSB & ASSOCIATES, INC.
FIRM # 16849

CR 200
FROM CMTA R.R. TO CR 201

GENERAL NOTES

SHEET 4 OF 10 | SHEET # 8D

CR200.PDF - GS.pltcfg
ExCR200
11:43:31 AM
5/11/2019
E:\GBES\CR 200\Documents\WA-44\CR201-BS\SHEETS\General\CR200-WA4G-GN04.dgn

Item	Material	All Roadways	
		Lift	Min. Density
247	FL BS (CMP IN PLC)	1st of 3 lifts 2nd of 3 lifts (final lift)	95% 98% 100%

Table 1
Flexible Base Material Requirements

Property	Test Method	Grade 4
Master gradation sieve size	Tex-110-E	**% Retained**
2½ in.		0
1¾ in.		0
7/8 in.		10-35
3/8 in.		30-50
No. 4		45-65
No. 40		70-90
No. 200		87-95
Liquid Limit, % Max.[1]	Tex-104-E	35
Plasticity Index, Max.[1]	Tex-106-E	10
Wet ball mill, % Max.	Tex-116-E	40
Wet ball mill, % Max. increase passing the No. 40 sieve		20
Min. compressive strength, psi	Tex-117-E	
Lateral pressure 0 psi		–
Lateral pressure 3 psi		90
Lateral pressure 15 psi		175

1. Determine plastic index in accordance with Tex-107-E (linear shrinkage) when liquid limit is unattainable as defined in Tex-104-E.

Correct subgrade (e.g. unstable areas, soft spots, etc.) prior to placing Flex Base. Consider subsidiary to the pertinent Items.

Complete all subgrade, ditches, slopes, and place all drainage structures to conform to required lines, grades, and cross-sections, as shown and directed, prior to the placement of Flex Base.

For Flex Base placed over the box culverts, do not use a Vibratory Roller to compact the material.

ITEM 300 – ASPHALTS, OILS, AND EMULSIONS
Asphalt season starts May 1st and ends September 15th.

PPA and REOBs are not allowed.

ITEM 300 – ASPHALTS, OILS, AND EMULSIONS (NON-TRACKING TACK COAT)
Apply non-tracking tack coat at 0.06 GAL/SY (residual) or as directed by the Construction Observer

Furnish QS-1HH or CQS-1HT tack coat for Thin Surface Overlay Mixtures meeting the following requirements:

Property	Test Procedure	Quick Setting QS-1HH	
		Min.	Max.
Viscosity, Saybolt Furol, 77ºF, sec.	T 72	15	–
Storage Stability, 1 Day, %	T 59	–	1
Settlement, 5-day, %	T 59	2	5
Sieve Test, %	T 59	–	0.30
Distillation Test:[1]			
Residue by distillation, % by wt.	T 59	50	–
Oil distillate, by volume of emulsion		–	1.0
Test on residue from distillation:			
Penetration, 77ºF, 100g, 5 sec.	T 49	–	20
Solubility in trichloroethylene, %	T 44	97.5	–
Softening point, ºF	T 53	150	–
Dynamic shear, G*/sin(d), 82ºF, 10 rad/s, kPa	T 315	1.0	–

1. Exception to AASHTO T-59: Bring the temperature on the lower thermometer slowly to 350ºF ± 10ºF. Maintain at this temperature for 20 min. Complete total distillation within 60 ± 5 min. from first application of heat.

Property	Test Procedure	Quick Setting CQS-1HT	
		Min.	Max.
Viscosity, Saybolt Furol, 122ºF, sec	T 72	15	100
Storage stability, 1 Day, %	T 59	–	1
Sieve Test, %	T 59	–	0.10
Particle Charge Test	T 59	Positive	
Track free time[1], minutes	Test Strip	–	30
Distillation Test:[2]	T 59		
Residue by distillation, % by wt.		58	
Test on residue from distillation:			
Penetration, 77ºF, 100g, 5 sec.	T 49	40	90

1. Exception to AASHTO T-59: Bring the temperature on the lower thermometer slowly to 350ºF ± 10ºF. Maintain at this temperature for 20 min. Complete total distillation in 60 ± 5 min. from first application of heat.

Spray a test strip of tack coat at a location on or near the project as directed. Consult the manufacturer for the recommended application rate. Allow the strip to cure for the maximum time

STATE OF TEXAS
J. KENT O'BRIEN
64398
REGISTERED PROFESSIONAL ENGINEER
5/9/2019

WILLIAMSON COUNTY 1848
WILLIAMSON COUNTY PRECINCT #2

JONES|CARTER
Texas Board of Professional Engineers Registration No. F-439
6330 West Loop South, Suite 150 • Bellaire, Texas 77401 • 713.777.5337

WSB & ASSOCIATES, INC.
FIRM # 16849

CR 200
FROM CMTA R.R. TO CR 201

GENERAL NOTES

SHEET 5 OF 10 | SHEET # 8E

CR200.PDF - GS.pltcfg
ExCR200
11:43:37 AM
5/11/2019
E:\GBES\CR 200\Documents\WA-44\CR201-BS\SHEETS\General\CR200-WA4a-GN05.dgn

specified. Drive over the test strip with equipment to simulate the effect of paving equipment. There should be no evidence tracking or picking up of the tack coat on the wheels of the equipment.

The Construction Observer shall verify the bond strength as directed.

ITEM 302 – AGGREGATES FOR SURFACE TREATMENTS
Previously tested aggregates delivered to the project, which are found to contain excessive quantities of dust (more than 0.5% passing the No. 40 sieve) during pre-coating, stockpiling or hauling operations, will be rejected, unless otherwise directed. Use test method Tex-200-F, Part II, for testing.

Table 3 Los Angeles Abrasion, % Max., is lowered from 35 to 30 and is applicable to all aggregates.

When TY E is allowed, furnish coarse fractionated recycled asphalt pavement (CF-RAP). CF-RAP aggregate stockpiles must be approved on a stockpile-by-stockpile basis, unless approved by the Construction Observer. Do not exceed stockpiles greater than 2000 tons.

CF-RAP shall meet the below gradation requirements or Grade 4 or finer. CF-RAP shall meet deleterious material and decantation requirements in accordance with Table 3.

Furnish CF-RAP meeting the following gradation requirements, after ignition burn-off of pre-existing asphalt, unless otherwise approved:

Sieve	Cumulative % Retained
5/8"	0
1/2"	10-25
3/8"	60-80
#4	85-100
#8	90-100

ITEMS 310, 316, 340, 341,
Perform **work during good weather, unless otherwise directed. If work is performed at Contractor's option, when inclement weather is impending, and the work is damaged by subsequent precipitation, the Contractor is responsible for all costs associated with replacing the work, if required.**

ITEM 310 – PRIME COAT
Apply blotter material to all driveways and intersections.

Use bituminous material MULTI OPTION

Provide Construction Observer with current Distributer Certification confirming calibration of asphalt measurement equipment.

Apply Prime to finished flex base surface at the rate shown in the plans. Hot mix can be applied to the primed surface of flex base after the prime has penetrated and cured for a minimum of 36 hours depending on weather conditions or as approved by the Construction Observer. Provide the Construction Observer with a copy of the asphalt deliver ticket prior to application.

Apply blotter material to all driveways and intersections. This work is subsidiary. When Multi Option is allowed, provide MC 30, EC 30, or AE-P.

ITEM 316 – SEAL COAT

Do not apply asphalt within 1½ hours of sunset, or later, unless otherwise directed.

Grade 4 and 5 Type D or Type E is allowed as AGGR (MULTI OPTION) for an underseal.

Use paper or other approved material at the beginning and end of each shot so that the transverse joint is straight and prevents overlap of asphalt shots.

Any areas with excessive asphalt or aggregate will be removed.

The Contractor is required to provide recommendations to the Construction Observer on adjusting aggregate and asphalt rates, when the road conditions, material properties or construction methods change.

Surface all transitions, tapers, climbing lanes and intersections to the limits as directed.

Keep all traffic, including construction traffic, off freshly placed surface treatment, as directed.

Provide Construction Observer with current Distributer Certification confirming calibration of asphalt measurement equipment.

Provide Construction Observer with a copy of the shipping ticket for the asphalt prior to application. Contractor must sample asphalt, in accordance to the applicable item. Label the sample can with date and project numbers. Samples must be stored where they are readily available to the County representative at the plant. The Contractor will be responsible for supplying storage for all samples until the project achieves substantial completion or otherwise directed.

Removal and proper disposal off the ROW of audible/profile markings, reflectorized markings, and raised markers is subsidiary.

ITEM 320 – EQUIPMENT FOR ASPHALT CONCRETE PAVEMENT
Use of motor grader is not allowed.

STATE OF TEXAS
J. KENT O'BRIEN
64398
REGISTERED
PROFESSIONAL ENGINEER
5/9/2019

WILLIAMSON COUNTY 1848

WILLIAMSON COUNTY PRECINCT #2

JONES|CARTER
Texas Board of Professional Engineers Registration No. F-439
6330 West Loop South, Suite 150 • Bellaire, Texas 77401 • 713.777.5337

WSB & ASSOCIATES, INC.
FIRM # 16849

CR 200
FROM CMTA R.R. TO CR 201

GENERAL NOTES

SHEET 6 OF 10 | SHEET # 8F

CR200 PDF - GS.pltcfg
E*CR200
11:43:44 AM
5/11/2019
E:\OBES\CR 200\Documents\WA-4*CR201-BS\SHEETS\General\CR200-WA4g-GN06.dgn

ITEMS 340, 341
The Contractor must sample asphalt binder, in accordance to the applicable item. Label the sample can with the corresponding CSJ, lot, and sub-lot numbers.

Samples must be stored in a common area where they are readily available to the County's representative at the plant. The Contractor will be responsible for supplying storage for all samples. Retain all asphalt samples until hot mix production is complete or directed otherwise.

When directed, the Contractor is responsible for disposal of all asphalt binder samples, in accordance to Local, State, and Federal regulations.

[Hot Mix Asphaltic Concrete (HMAC) Core Holes]
Refill and compact all HMAC core holes to the same elevation as the adjacent roadway. Use hot mix of the type being used in the project to fill core holes. As an alternative a high performance cold patching mix such as Rapid Cure Patching Mix meeting the requirements of DMS-9203 or Medium Cure Patching mix made with SCM meeting requirements of DMS-9202. Consider this work subsidiary to the pertinent Items.

Mill a transverse butt joint to transition from the new ACP to the existing surface tie-in. Make the transition a minimum of 50 feet H: 1-inch V slope ratio of newly placed ACP. Make the temporary joint, at the tie-in, a minimum of 10 feet longitudinally and covering the entire width. Saw-cut existing pavement as directed. Prior to milling, core the existing pavement to determine its thickness. Do not proceed with milling until directed. Consider this work subsidiary to the pertinent Items.

Contractor to submit for approval a current mix design (less than 6 months old) to the Construction Observer that meets the following requirements prior to use on the project.

PPA and REOBS are not allowed.

Lime or an approved anti-stripping agent must be used when crushed gravel is utilized to meet a SAC "A" requirement.

Aggregates used on shoulders and ramps are required to meet SAC requirements.

Target laboratory molded density is 97% for all mixtures for Texas Gyratory Compactor (TGC) mixture designs.

When using Superpave Gyratory Compactor (SGC) to design mixtures, submit the SGC mix design to the Construction Observer for approval.

When using substitute binders, mold specimens for mix design and production at the temperature required for the substitute binder used to produce the HMA.

All mixtures must meet the Hamburg requirement as stated in the table below.

High-Temperature Binder Grade	Test Method	Hamburg Wheel Test Requirements [1]		
		Minimum # of Passes	Maximum Rut Depth (mm)[2]	Minimum Rut Depth (mm)[2,3]
PG 64 or lower	Tex-242-F	7,000	12.5	3
PG 70	Tex-242-F	15,000	12.5	3
PG 76 or higher	Tex-242-F	20,000	12.5	3

1. The Construction Observer may accept Hamburg Wheel test results for production and placement if no more than 1 of the 5 most recent tests is below the specified number of passes and the failing test is no more than 2,000 passes below the specified number of passes.
2. Rut depth tested @ 122°F
3. Unless approved otherwise.

When using RAP and/or RAS:
Use of RAS is not allowed. When using RAP, include the management methods of processing, stockpiling, and testing of RAP in the QCP submitted for the project. Blending of RAP in one feeder bin or in a stockpile is not permitted.

Asphalt content and binder properties of RAP stockpiles must be documented when recycled asphalt content greater than 20% is utilized.

RAP is not allowed for any surface mix applications.

No more than 20% RAP by weight of aggregate is allowed in any mix application.

Complete all roadways before final surface course placement, unless directed otherwise.

Ensure placement sequence to avoid excess distance of longitudinal joint lapback not to exceed one day's production rates.

The Contractor shall utilize a material transfer device per item 320 and a grade reference (such as a ski) for overlay operations. Consider subsidiary to the pertinent items.

Use a device to create a maximum 3H: 1V notched wedge joint on all hot mix joints of two (2) inches or greater. Consider subsidiary to the pertinent Items.

Taper transverse faces at ends of passes as directed.

Make transverse tapers on each end of pass using a minimum slope rate of 60H:1V. Tapers shall be removed directly before placement of final lift. Consider subsidiary to the pertinent Items.

Provide a minimum transition for all side streets of at least 12 ft. and driveways of at least six (6) feet, unless otherwise shown on the plans or otherwise approved/directed.

STATE OF TEXAS
J. KENT O'BRIEN
64398
REGISTERED PROFESSIONAL ENGINEER
5/9/2019

WILLIAMSON COUNTY 1848

WILLIAMSON COUNTY PRECINCT #2

JONES|CARTER
Texas Board of Professional Engineers Registration No. F-439
6330 West Loop South, Suite 150 • Bellaire, Texas 77401 • 713.777.5337

WSB & ASSOCIATES, INC.
FIRM # 16849

CR 200
FROM CMTA R.R. TO CR 201

GENERAL NOTES

SHEET 7 OF 10 | SHEET # 8G

CR200.PDF - GS.pltcfg
ExCR200
11:43:50 AM
5/11/2019
E:\OBES\CR 200\Documents\WA-44\CR201-BS\SHEETS\General\CR200-WA4G-GN07.dgn

Tack every intermediate layer, unless otherwise directed. Do not dilute tack coat. Apply it through a distributor spray bar in accordance with Article 316.3.1 Distributor.

Submit any proposed adjustments or changes to a job mix formula to the Construction Observer before production of the new job mix formula.

For Mixture Design Verification, provide the Construction Observer with two 5-gallon buckets of each aggregate stockpile to be used on the project with three gallons of each PG binder from the plant to be used on the project. Sufficient quantities of any other additives that will be used in the HMA mixture shall also be provided.

Prior to allowing production of the trial batch, the Construction Observer will use the materials provided by the Contractor to perform the following tests to verify the HMA mixture.

1. Indirect Tensile Test in accordance with Tex-266-F
2. HAMBURG Wheel Test in accordance with Tex-242-F
3. Overlay Test in accordance with Tex-248-F
4. Cantabro Test in accordance with Tex-245-F

For mixtures designed with a Texas Gyratory Compactor (TGC), the Construction Observer may require that the target laboratory molded density be raised to no more than 97.5% or may lower the design number of gyrations to no less than 35 for mixtures designed with an SGC if any of the following conditions exist:

1. The Indirect Tensile Test results in a value greater than 200 PSI
2. The Hamburg Wheel Test results in a value less than 3.0 mm
3. The Overlay Test results in a value less than 100 cycles
4. The Cantabro Test results in a value of more than 20% loss

In lieu of or in addition to evaluating the mixture design prior to allowing a trial batch to be produced, the Construction Observer may also evaluate the mixture produced during the trial batch for compliance with the four tests listed above.

Submit thermal and segregation profiles as well as longitudinal joint densities on electronic forms provided by County to the Construction Observer.

When surface irregularities, as defined in Article 341.4.9.3.3.5, "Irregularities," are detected or measured, the Contractor must take immediate corrective action defined as the removal and replacement of a full lane width of the defective area using a paver to place new mix, unless otherwise directed. If there are multiple defective areas within a sub-lot, making up to 30% of the sub-lot by area, the Construction Observer will require the entire sub-lot be removed, unless directed otherwise.

ITEM 420 – CONCRETE SUBSTRUCTURES
Perform work during good weather unless otherwise directed. If work is performed at Contractor's option, when inclement weather is impending, and the work is damaged by subsequent precipitation, the Contractor is responsible for all costs associated with replacing the work, if required.

Remove all loose Formwork and other Materials from the Floodplain or drainage areas, daily, which could float off in a Storm Water Event, as directed.

ITEM 421 – HYDRAULIC CEMENT CONCRETE
Minimum air-entrainment requirements are waived for all classes of concrete, except for Class S, DC, or CO concrete. For all classes of concrete, except for Class S, P, or CO concrete or non-structural concrete, as defined in Table 8, the entrained air content must not exceed 8% air.

ITEM 427 – SURFACE FINISHES FOR CONCRETE
Provide a Surface Area I, **Rub Finish** to all concrete structures, except those with form liner surfaces.

ITEMS 462, 464, 466, 467
Place FLOWABLE FILL in areas, underneath the Roadway, where there will be less than three (3) feet of depth from top of pipe or structure to the subgrade elevation. Payment made under Item 401.

ITEM 462 – CONCRETE BOX CULVERTS AND DRAINS
Provide Shop Drawings, signed and sealed by a Licensed Professional Engineer, for all precast box culverts. Indicate the appropriate design load as shown on the plans LRFD and the maximum design depth of fill.

Use cohesionless backfill material of aggregate size range of ⅜-inch to 1½-inch, for bedding material.

Remove all loose Formwork and other Materials from the Floodplain or drainage areas, daily, which could float off in a Storm Water Event, as directed.

ITEM 465 – JUNCTION BOXES, MANHOLES AND INLETS
Backfill shall use cohesionless material per Item 400 or flowable fill if width between structure and extent of excavation is 2 ft. or less. This work is subsidiary.

Consider excavation and backfill, frames, grates, rings and covers subsidiary to pertinent Items.

Remove all loose Formwork and other Materials from the Floodplain or drainage areas, daily, which could float off in a Storm Water Event, as directed.

ITEM 466 – HEADWALLS AND WINGWALLS
Use Class C concrete for headwalls or wingwalls.

STATE OF TEXAS
J. KENT O'BRIEN
64398
REGISTERED PROFESSIONAL ENGINEER
5/9/2019

WILLIAMSON COUNTY 1848

WILLIAMSON COUNTY PRECINCT #2

JONES|CARTER
Texas Board of Professional Engineers Registration No. F-439
6330 West Loop South, Suite 150 • Bellaire, Texas 77401 • 713.777.5337

WSB & ASSOCIATES, INC.
FIRM # 16849

CR 200
FROM CMTA R.R. TO CR 201

GENERAL NOTES

SHEET 8 OF 10 | SHEET # 8H

CR200.PDF - GS.pltcfg
ExCR200
11:43:57 AM
5/11/2019
E:\OBES\CR 200\Documents\WA-44\CR201-BS\SHEETS\General\CR200-WA4G-GN08.dgn

Remove all loose Formwork and other Materials from the Floodplain or drainage areas, daily, which could float off in a Storm Water Event, as directed.

ITEM 467 – SAFETY END TREATMENT
Cut pipe ends, in the field, to match roadway side slopes, or as directed. Apply asphalt base aluminum paint to the cut ends.

All Type II SETs shall have mitered pipe ends and cast-in-place riprap aprons.

Use Class C concrete.

Remove all loose Formwork and other Materials from the Floodplain or drainage areas, daily, which could float off in a Storm Water Event, as directed.

ITEM 496 – REMOVING STRUCTURES
The Contractor's attention is directed to the fact that migratory birds tend to concentrate nesting on transportation structures. If migratory bird nests are present within the project limits, remove all old migratory bird nests only between September 16th and February 28th from any structure where work will be done. In addition, be prepared to prevent migratory birds from building nests between February 1st and August 31st.

All methods used for the removal of old bird nests and the prevention of re-nesting must be approved by the Construction Observer, well in advance of the planned use.

In the event that any active nest of migratory birds is encountered on-site during project construction, all construction activity, within the immediate vicinity of the nest, will cease immediately. Contact the Construction Observer to determine how to proceed.

The structure or structures to be removed may have surface coatings, which may contain hazardous materials. Provide for the safety and health of employees and abide by all OSHA Standards and Regulations as well as those set by Texas Department of State Health Services (DSHS).

ITEM 502 – BARRICADES, SIGNS, AND TRAFFIC HANDLING
Unless otherwise approved, one (1) lane in each direction shall remain open at all times.

No work will be allowed between 8:00 PM to 5:00 AM without approval from Construction Observer. Nighttime lane closures will only be allowed with approval from Construction Observer and only from 8:00 PM to 5:00 AM, unless otherwise shown on the plans.

No Daytime Lane Closures will be allowed, unless otherwise shown on the plans or as directed by the GEC.

The GEC is the authority to approve additional lane closures, prior to any work.

Submit and secure concurrence, prior to the publication of any notices or placement of any traffic control devices for implementation of the traffic control plan, hereinafter called a Lane Closure Notice (LCN).

Present to GEC, an LCN for traffic control, which is proposed for implementation, a minimum of four (4) full working days preceding any proposed implementation date. Indicate the estimated date, time, duration, and location for the proposed work. As a part of the LCN submit a written description of the lane closure(s) depicting the proposed traffic control devices used, based on the appropriate plan sheet, TxDOT or Texas Manual on Uniform Traffic Control Devices (TMUTCD) standards, and an operational description of the work to be performed.

Present to GEC, LCN's proposed to detour traffic, a minimum of ***seven (7)*** full calendar days preceding any proposed implementation date.

Present to GEC, LCN's proposed for night work, a minimum of ***seven (7)*** full calendar days preceding any proposed implementation date.

Receive concurrence prior to LCN implementation.

Meet with the Construction Observer prior to roadway and lane closures to ensure that sufficient equipment, materials, devices, and workers will be used. Discuss contingency plans at that time. Consider inclement weather prior to implementing the lane closures.

Submit a cancellation of any lane closures, no later than noon on the day preceding the proposed work.

Do not set up any Lane Closure / TCP when the pavement is wet prior to the "setup," unless otherwise directed. Revise Traffic Control, when inclement weather is imminent, as directed.

Incorporate and maintain a 3H: 1V safety wedge into the proposed construction for any roadway edge of 2 inches or greater adjacent to a roadway under traffic.

Within the limits of the project, provide standard barricades, warning signs, delineators, lights, 28-inch cones, and flaggers in enough numbers and combinations, as directed.

ITEM 529 – CONCRETE CURB, GUTTER AND COMBINED CURB AND GUTTER
Fibers for concrete as defined in DMS-4550 will not be allowed.

ITEM 530 – INTERSECTIONS, DRIVEWAYS, AND TURNOUTS
Notify property owners a minimum of 48 hours in advance of beginning work on their driveways. Provide, to GEC, a list of each notification and contact prior to each closure.

Provide access, at all times, to adjacent property. Construct driveways one-half sections, to allow access.

STATE OF TEXAS
J. KENT O'BRIEN
64398
REGISTERED PROFESSIONAL ENGINEER
5/9/2019

WILLIAMSON COUNTY 1848

WILLIAMSON COUNTY PRECINCT #2

JONES|CARTER
Texas Board of Professional Engineers Registration No. F-439
6330 West Loop South, Suite 150 • Bellaire, Texas 77401 • 713.777.5337

WSB & ASSOCIATES, INC.
FIRM # 16849

CR 200
FROM CMTA R.R. TO CR 201

GENERAL NOTES

SHEET 9 OF 10 | SHEET # 81

CR200.PDF - GS.pltcfg
ExCR200
11:44:03 AM
5/11/2019
E:\OBES\CR 200\Documents\WA-44\CR201-BS\SHEETS\General\CR200-WA4G-GN09.dgn

Do not completely close driveways for reconstruction purposes, unless a reasonable alternate access exists to the property, as approved.

Place the Flex Base for the Driveways using Ordinary Compaction.

ITEM 662 – WORK ZONE PAVEMENT MARKINGS
Notify the Construction Observer at least 24 hours in advance of removing existing striping and placing pavement markings & markers.

Apply markings during good weather unless otherwise directed. If markings are placed at Contractor's option, when inclement weather is impending, and the markings are damaged by subsequent precipitation, the Contractor is responsible for all costs associated with replacing the markings if required.

Remove work zone pavement markings within 48 hours after permanent striping has been completed.

Foil backed pavement markings will not be allowed.

ITEM 666 – RETRO-REFLECTORIZED PAVEMENT MARKINGS
Reference existing channel islands, gores, and lane striping before commencing work. Provide referencing that will include a sketch of the layout to the Construction Observer. Obtain approval for placement of guidemarks from the Construction Observer before installing any permanent pavement markings. Consider subsidiary to the pertinent Items.

TY II markings must cure 48 hr. prior to placing TY I markings.

ITEM 672 – RAISED PAVEMENT MARKERS
Place the bituminous adhesive at a temperature range of 380°F to 390°F. Place the pavement marker on the bituminous adhesive within approximately 20 seconds after the adhesive is placed on the pavement. Ensure the pavement marker rests solely on the adhesive and not the pavement surface. Ensure that a minimum of ⅛ inch layer of bituminous adhesive remains between the pavement marker and the pavement surface.

ITEM 730 – ROADSIDE MOWING
Perform roadside mowing along the Roadway for the length of the project, as directed.

Complete spot mowing, as directed.

ITEM 734 – LITTER REMOVAL
Litter Removal, as defined below, is subsidiary to Roadside Mowing.

Complete Litter Removal Cycles along the Roadway for the length of the project, as directed.

Complete Litter Removal cycles prior to any mowing cycles.

Remove all litter on the right of way, within project limits.

ITEM 738 – CLEANING AND SWEEPING HIGHWAYS
Complete cleaning and sweeping cycles at the intervals, as directed. Complete one cycle at the end of construction and prior to final acceptance by the Department.

ITEM 6001 – PORTABLE CHANGEABLE MESSAGE SIGN
Provide **2** "Electronic" Portable Changeable Message Sign(s) (EPCMS) as part of the traffic control operations and provide another one that is available to utilize when a backup is needed. Consider the one designated for backup as subsidiary to the various Items of the project. All EPCMS will be exclusive to this project, unless otherwise approved. Placement location and message as directed.

Place appropriate number of "Electronic" Portable Changeable Message Signs (EPCMS) at locations requiring lane closures for one (1) week prior to the closures, or as directed. Obtain approval for the actual message that will appear on the boards. If more than two phases of a message are required per board, provide additional EPCMS's to meet the two-phases-per-board requirement. Consider this Item as subsidiary to the various Items of the project.

STATE OF TEXAS
J. KENT O'BRIEN
64398
REGISTERED PROFESSIONAL ENGINEER
5/9/2019

WILLIAMSON COUNTY 1848

WILLIAMSON COUNTY PRECINCT #2

JONES|CARTER
Texas Board of Professional Engineers Registration No. F-439
6330 West Loop South, Suite 150 • Bellaire, Texas 77401 • 713.777.5337

WSB & ASSOCIATES, INC.
FIRM # 16849

CR 200
FROM CMTA R.R. TO CR 201

GENERAL NOTES

SHEET 10 OF 10 | SHEET # 8J

CR200.PDF - GS.pltcfg
ExCR200
11:14:09 AM
5/11/2019
E:\OBES\CR 200\Documents\WA-44\CR201-BS\SHEETS\General\CR200-WA4g-GN10.dgn

APPLICATION FEE FORM
(TCEQ-0574)

Application Fee Form

Texas Commission on Environmental Quality
Name of Proposed Regulated Entity: CR 200 from Cap Metro Railroad to CR 201
Regulated Entity Location: Williamson County
Name of Customer: Williamson County
Contact Person: Terron Evertson, P.E. Phone: (512) 943-3330
Customer Reference Number (if issued):CN 600897888
Regulated Entity Reference Number (if issued):RN 104283916

Austin Regional Office (3373)

☐ Hays ☐ Travis ☒ Williamson

San Antonio Regional Office (3362)

☐ Bexar ☐ Medina ☐ Uvalde
☐ Comal ☐ Kinney

Application fees must be paid by check, certified check, or money order, payable to the **Texas Commission on Environmental Quality**. Your canceled check will serve as your receipt. **This form must be submitted with your fee payment**. This payment is being submitted to:

☐ Austin Regional Office
☐ Mailed to: TCEQ - Cashier
Revenues Section
Mail Code 214
P.O. Box 13088
Austin, TX 78711-3088

☐ San Antonio Regional Office
☐ Overnight Delivery to: TCEQ - Cashier
12100 Park 35 Circle
Building A, 3rd Floor
Austin, TX 78753
(512)239-0357

Site Location (Check All That Apply):

☒ Recharge Zone ☐ Contributing Zone ☐ Transition Zone

Type of Plan	***Size***	***Fee Due***
Water Pollution Abatement Plan, Contributing Zone Plan: One Single Family Residential Dwelling	Acres	$
Water Pollution Abatement Plan, Contributing Zone Plan: Multiple Single Family Residential and Parks	Acres	$
Water Pollution Abatement Plan, Contributing Zone Plan: Non-residential	Acres	$
Sewage Collection System	L.F.	$
Lift Stations without sewer lines	Acres	$
Underground or Aboveground Storage Tank Facility	Tanks	$
Piping System(s)(only)	Each	$
Exception	1 Each	$ 500
Extension of Time	Each	$

Signature: _____ Date: 09/08/2020

Application Fee Schedule

Texas Commission on Environmental Quality

Edwards Aquifer Protection Program 30 TAC Chapter 213 (effective 05/01/2008)

Water Pollution Abatement Plans and Modifications

Contributing Zone Plans and Modifications

Project	*Project Area in Acres*	*Fee*
One Single Family Residential Dwelling	< 5	$650
Multiple Single Family Residential and Parks	< 5 5 < 10 10 < 40 40 < 100 100 < 500 ≥ 500	$1,500 $3,000 $4,000 $6,500 $8,000 $10,000
Non-residential (Commercial, industrial, institutional, multi-family residential, schools, and other sites where regulated activities will occur)	< 1 1 < 5 5 < 10 10 < 40 40 < 100 ≥ 100	$3,000 $4,000 $5,000 $6,500 $8,000 $10,000

Organized Sewage Collection Systems and Modifications

Project	*Cost per Linear Foot*	*Minimum Fee-Maximum Fee*
Sewage Collection Systems	$0.50	$650 - $6,500

Underground and Aboveground Storage Tank System Facility Plans and Modifications

Project	*Cost per Tank or Piping System*	*Minimum Fee-Maximum Fee*
Underground and Aboveground Storage Tank Facility	$650	$650 - $6,500

Exception Requests

Project	*Fee*
Exception Request	$500

Extension of Time Requests

Project	*Fee*
Extension of Time Request	$150

CORE DATA FORM
(TCEQ-10400)

TCEQ Core Data Form

TCEQ Use Only

For detailed instructions regarding completion of this form, please read the Core Data Form Instructions or call 512-239-5175.

SECTION I: General Information

1. Reason for Submission (If other is checked please describe in space provided.)

☒ New Permit, Registration or Authorization (Core Data Form should be submitted with the program application.)

☐ Renewal (Core Data Form should be submitted with the renewal form) ☐ Other

2. Customer Reference Number (if issued)		3. Regulated Entity Reference Number (if issued)
CN 600897888	Follow this link to search for CN or RN numbers in **Central Registry****	RN 104283916

SECTION II: Customer Information

4. General Customer Information | 5. Effective Date for Customer Information Updates (mm/dd/yyyy)

☐ New Customer ☐ Update to Customer Information ☐ Change in Regulated Entity Ownership
☐ Change in Legal Name (Verifiable with the Texas Secretary of State or Texas Comptroller of Public Accounts)

The Customer Name submitted here may be updated automatically based on what is current and active with the Texas Secretary of State (SOS) or Texas Comptroller of Public Accounts (CPA).

6. Customer Legal Name (If an individual, print last name first: e.g.: Doe, John) | If new Customer, enter previous Customer below:

7. TX SOS/CPA Filing Number	8. TX State Tax ID (11 digits)	9. Federal Tax ID (9 digits)	10. DUNS Number (if applicable)

11. Type of Customer: ☐ Corporation ☐ Individual Partnership: ☐ General ☐ Limited
Government: ☐ City ☐ County ☐ Federal ☐ State ☐ Other ☐ Sole Proprietorship ☐ Other:

12. Number of Employees
☐ 0-20 ☐ 21-100 ☐ 101-250 ☐ 251-500 ☐ 501 and higher

13. Independently Owned and Operated?
☐ Yes ☐ No

14. Customer Role (Proposed or Actual) - as it relates to the Regulated Entity listed on this form. Please check one of the following:

☐ Owner ☐ Operator ☐ Owner & Operator
☐ Occupational Licensee ☐ Responsible Party ☐ Voluntary Cleanup Applicant ☐ Other:

15. Mailing Address:

City	State	ZIP	ZIP + 4

16. Country Mailing Information (if outside USA)	17. E-Mail Address (if applicable)

18. Telephone Number	19. Extension or Code	20. Fax Number (if applicable)
( ) -		( ) -

SECTION III: Regulated Entity Information

21. General Regulated Entity Information (If `New Regulated Entity" is selected below this form should be accompanied by a permit application)

☒ New Regulated Entity ☐ Update to Regulated Entity Name ☐ Update to Regulated Entity Information

The Regulated Entity Name submitted may be updated in order to meet TCEQ Agency Data Standards (removal of organizational endings such as Inc, LP, or LLC).

22. Regulated Entity Name (Enter name of the site where the regulated action is taking place.)

CR 200 from just north of Stage Coach to CR 201

23. Street Address of the Regulated Entity: (No PO Boxes)							
	City		State		ZIP		ZIP + 4	
24. County							

Enter Physical Location Description if no street address is provided.

25. Description to Physical Location:	CR 200 from just north of Stage Coach to CR 201	
26. Nearest City	State	Nearest ZIP Code
Liberty Hill	TX	78642

27. Latitude (N) In Decimal:	30.680102		28. Longitude (W) In Decimal:	-97.933558	
Degrees	Minutes	Seconds	Degrees	Minutes	Seconds
30	40	48.3672	97	56	0.8088

29. Primary SIC Code (4 digits)	30. Secondary SIC Code (4 digits)	31. Primary NAICS Code (5 or 6 digits)	32. Secondary NAICS Code (5 or 6 digits)
1611		237310	

33. What is the Primary Business of this entity? (Do not repeat the SIC or NAICS description.)

County Roadway

34. Mailing Address:	3151 S.E. Inner Loop						
	Suite B						
	City	Georgetown	State	TX	ZIP	78626	ZIP + 4
35. E-Mail Address:	roads@wilco.org						

36. Telephone Number	37. Extension or Code	38. Fax Number (if applicable)
(51) 94 - 333		(51) 94 - 333

39. **TCEQ Programs and ID Numbers** Check all Programs and write in the permits/registration numbers that will be affected by the updates submitted on this form. See the Core Data Form instructions for additional guidance.

☐ Dam Safety	☐ Districts	☒ Edwards Aquifer	☐ Emissions Inventory Air	☐ Industrial Hazardous Waste
☐ Municipal Solid Waste	☐ New Source Review Air	☐ OSSF	☐ Petroleum Storage Tank	☐ PWS
☐ Sludge	☐ Storm Water	☐ Title V Air	☐ Tires	☐ Used Oil
☐ Voluntary Cleanup	☐ Waste Water	☐ Wastewater Agriculture	☐ Water Rights	☐ Other:

SECTION IV: Preparer Information

40. Name:	Odalys C. Johnson, P.E., C.F.M.		41. Title: Senior Project Engineer
42. Telephone Number	43. Ext./Code	44. Fax Number	45. E-Mail Address
(51) 44 - 949	3497	( ) -	ojohnson@jonescarter.com

SECTION V: Authorized Signature

46. By my signature below, I certify, to the best of my knowledge, that the information provided in this form is true and complete, and that I have signature authority to submit this form on behalf of the entity specified in Section II, Field 6 and/or as required for the updates to the ID numbers identified in field 39.

Company:	JonesCarter	Job Title:	Project Manager
Name(*In Print*):	Odalys C. Johnson, P.E., C.F.M.	Phone:	(512) 441 - 9493
Signature:		Date:	09/08/2020