Texas Commission on Environmental Quality

Edwards Aquifer Application Cover Page

Our Review of Your Application

The Edwards Aquifer Program staff conducts an administrative and technical review of all applications. The turnaround time for administrative review can be up to 30 days as outlined in 30 TAC 213.4(e). Generally administrative completeness is determined during the intake meeting or within a few days of receipt. The turnaround time for technical review of an administratively complete Edwards Aquifer application is 90 days as outlined in 30 TAC 213.4(e). Please know that the review and approval time is directly impacted by the quality and completeness of the initial application that is received. In order to conduct a timely review, it is imperative that the information provided in an Edwards Aquifer application include final plans, be accurate, complete, and in compliance with 30 TAC 213.

Administrative Review

1. Edwards Aquifer applications must be deemed administratively complete before a technical review can begin. To be considered administratively complete, the application must contain completed forms and attachments, provide the requested information, and meet all the site plan requirements. The submitted application and plan sheets should be final plans. Please submit one full-size set of plan sheets with the original application, and half-size sets with the additional copies.

   To ensure that all applicable documents are included in the application, the program has developed tools to guide you and web pages to provide all forms, checklists, and guidance. Please visit the below website for assistance: http://www.tceq.texas.gov/field/eapp.

2. This Edwards Aquifer Application Cover Page form (certified by the applicant or agent) must be included in the application and brought to the administrative review meeting.

3. Administrative reviews are scheduled with program staff who will conduct the review. Applicants or their authorized agent should call the appropriate regional office, according to the county in which the project is located, to schedule a review. The average meeting time is one hour.

4. In the meeting, the application is examined for administrative completeness. Deficiencies will be noted by staff and emailed or faxed to the applicant and authorized agent at the end of the meeting, or shortly after. Administrative deficiencies will cause the application to be deemed incomplete and returned.

   An appointment should be made to resubmit the application. The application is re-examined to ensure all deficiencies are resolved. The application will only be deemed administratively complete when all administrative deficiencies are addressed.

5. If an application is received by mail, courier service, or otherwise submitted without a review meeting, the administrative review will be conducted within 30 days. The applicant and agent will be contacted with the results of the administrative review. If the application is found to be administratively incomplete, it can be retrieved from the regional office or returned by regular mail. If returned by mail, the regional office may require arrangements for return shipping.

6. If the geologic assessment was completed before October 1, 2004 and the site contains "possibly sensitive" features, the assessment must be updated in accordance with the *Instructions to Geologists* (TCEQ-0585 Instructions).

Technical Review

1. When an application is deemed administratively complete, the technical review period begins. The regional office will distribute copies of the application to the identified affected city, county, and groundwater conservation district whose jurisdiction includes the subject site. These entities and the public have 30 days to provide comments on the application to the regional office. All comments received are reviewed by TCEQ.

2. A site assessment is usually conducted as part of the technical review, to evaluate the geologic assessment and observe existing site conditions. The site must be accessible to our staff. The site boundaries should be

clearly marked, features identified in the geologic assessment should be flagged, roadways marked and the alignment of the Sewage Collection System and manholes should be staked at the time the application is submitted. If the site is not marked the application may be returned.

3. We evaluate the application for technical completeness and contact the applicant and agent via Notice of Deficiency (NOD) to request additional information and identify technical deficiencies. There are two deficiency response periods available to the applicant. There are 14 days to resolve deficiencies noted in the first NOD. If a second NOD is issued, there is an additional 14 days to resolve deficiencies. If the response to the second notice is not received, is incomplete or inadequate, or provides new information that is incomplete or inadequate, the application must be withdrawn or will be denied. Please note that because the technical review is underway, whether the application is withdrawn or denied **the application fee will be forfeited**.

4. The program has 90 calendar days to complete the technical review of the application. If the application is technically adequate, such that it complies with the Edwards Aquifer rules, and is protective of the Edwards Aquifer during and after construction, an approval letter will be issued. Construction or other regulated activity may not begin until an approval is issued.

Mid-Review Modifications

It is important to have final site plans prior to beginning the permitting process with TCEQ to avoid delays.

Occasionally, circumstances arise where you may have significant design and/or site plan changes after your Edwards Aquifer application has been deemed administratively complete by TCEQ. This is considered a "Mid-Review Modification". Mid-Review Modifications may require redistribution of an application that includes the proposed modifications for public comment.

If you are proposing a Mid-Review Modification, two options are available:

- If the technical review has begun your application can be denied/withdrawn, your fees will be forfeited, and the plan will have to be resubmitted.
- TCEQ can continue the technical review of the application as it was submitted, and a modification application can be submitted at a later time.

If the application is denied/withdrawn, the resubmitted application will be subject to the administrative and technical review processes and will be treated as a new application. The application will be redistributed to the affected jurisdictions.

Please contact the regional office if you have questions. If your project is located in Williamson, Travis, or Hays County, contact TCEQ's Austin Regional Office at 512-339-2929. If your project is in Comal, Bexar, Medina, Uvalde, or Kinney County, contact TCEQ's San Antonio Regional Office at 210-490-3096

Please fill out all required fields below and submit with your application.

1. Regulated Entity Name: Ascend Westinghouse					**2. Regulated Entity No.:** 111106589			
3. Customer Name: DHIC - Westinghouse, LLC					**4. Customer No.:** 605816347			
5. Project Type: **(Please circle/check one)**	New		Modification		Extension		Exception	
6. Plan Type: **(Please circle/check one)**	WPAP	CZP	SCS	UST	AST	EXP	EXT	Technical Clarification	Optional Enhanced Measures
7. Land Use: **(Please circle/check one)**	Residential		Non-residential			**8. Site (acres):**		14.5 acres
9. Application Fee:	$ 960.50		**10. Permanent BMP(s):**			1xBatch detention basin, 1xVFS		
11. SCS (Linear Ft.):	1,921 LF		**12. AST/UST (No. Tanks):**			None		
13. County:	Williamson		**14. Watershed:**			Turkey Creek-Brushy Creek		

Application Distribution

Instructions: Use the table below to determine the number of applications required. One original and one copy of the application, plus additional copies (as needed) for each affected incorporated city, county, and groundwater conservation district are required. Linear projects or large projects, which cross into multiple jurisdictions, can require additional copies. Refer to the "Texas Groundwater Conservation Districts within the EAPP Boundaries" map found at:

http://www.tceq.texas.gov/assets/public/compliance/field_ops/eapp/EAPP%20GWCD%20map.pdf

For more detailed boundaries, please contact the conservation district directly.

Austin Region			
County:	**Hays**	**Travis**	**Williamson**
Original (1 req.)	__	__	✓
Region (1 req.)	__	__	✓
County(ies)	__	__	✓
Groundwater Conservation District(s)	__Edwards Aquifer Authority __Barton Springs/ Edwards Aquifer __Hays Trinity __Plum Creek	__Barton Springs/ Edwards Aquifer	NA
City(ies) Jurisdiction	__Austin __Buda __Dripping Springs __Kyle __Mountain City __San Marcos __Wimberley __Woodcreek	__Austin __Bee Cave __Pflugerville __Rollingwood __Round Rock __Sunset Valley __West Lake Hills	__Austin __Cedar Park __Florence ✓Georgetown __Jerrell __Leander __Liberty Hill __Pflugerville __Round Rock

San Antonio Region					
County:	**Bexar**	**Comal**	**Kinney**	**Medina**	**Uvalde**
Original (1 req.)	__	__	__	__	__
Region (1 req.)	__	__	__	__	__
County(ies)	__	__	__	__	__
Groundwater Conservation District(s)	__ Edwards Aquifer Authority __Trinity-Glen Rose	__Edwards Aquifer Authority	__Kinney	__EAA __Medina	__EAA __Uvalde
City(ies) Jurisdiction	__Castle Hills __Fair Oaks Ranch __Helotes __Hill Country Village __Hollywood Park __San Antonio (SAWS) __Shavano Park	__Bulverde __Fair Oaks Ranch __Garden Ridge __New Braunfels __Schertz	NA	__San Antonio ETJ (SAWS)	NA

I certify that to the best of my knowledge, that the application is complete and accurate. This application is hereby submitted to TCEQ for administrative review and technical review.
Brian Grace, P.E. Print Name of Customer/Authorized Agent
Signature of Customer/Authorized Agent — Date: 8/12/2025

FOR TCEQ INTERNAL USE ONLY			
Date(s)Reviewed:		Date Administratively Complete:	
Received From:		Correct Number of Copies:	
Received By:		Distribution Date:	
EAPP File Number:		Complex:	
Admin. Review(s) (No.):		No. AR Rounds:	
Delinquent Fees (Y/N):		Review Time Spent:	
Lat./Long. Verified:		SOS Customer Verification:	
Agent Authorization Complete/Notarized (Y/N):		Fee Check:	Payable to TCEQ (Y/N):
Core Data Form Complete (Y/N):			Signed (Y/N):
Core Data Form Incomplete Nos.:			Less than 90 days old (Y/N):

General Information Form

Texas Commission on Environmental Quality

For Regulated Activities on the Edwards Aquifer Recharge and Transition Zones and Relating to 30 TAC §213.4(b) & §213.5(b)(2)(A), (B) Effective June 1, 1999

To ensure that the application is administratively complete, confirm that all fields in the form are complete, verify that all requested information is provided, consistently reference the same site and contact person in all forms in the application, and ensure forms are signed by the appropriate party.

Note: Including all the information requested in the form and attachments contributes to more streamlined technical reviews.

Signature

To the best of my knowledge, the responses to this form accurately reflect all information requested concerning the proposed regulated activities and methods to protect the Edwards Aquifer. This **General Information Form** is hereby submitted for TCEQ review. The application was prepared by:

Print Name of Customer/Agent: Brian Grace

Date: 9/29/2025

Signature of Customer/Agent:

_____

Project Information

1. Regulated Entity Name: Ascend Westinghouse
2. County: Williamson County
3. Stream Basin: _____
4. Groundwater Conservation District (If applicable): N/A
5. Edwards Aquifer Zone:

   ☑ Recharge Zone
   ☐ Transition Zone

6. Plan Type:

   ☐ WPAP
   ☑ SCS
   ☐ Modification
   ☐ AST
   ☐ UST
   ☐ Exception Request

7. Customer (Applicant):

Contact Person: Todd Jones
Entity: DHIC - Westinghouse, LLC
Mailing Address: 1341 Horton Circle
City, State: Arlington, TX Zip: 76011
Telephone: 817-390-8200 FAX: _____
Email Address: BTJones1@drhorton.com

8. Agent/Representative (If any):

Contact Person: Brian Grace, P.E.
Entity: BGE, Inc
Mailing Address: 1701 Directors Blvd, Suite 1000
City, State: 1701 Directors Blvd, Suite 1000 Zip: 78744
Telephone: 512-879-0418 FAX: _____
Email Address: BGrace@bgeinc.com

9. Project Location:

☑ The project site is located inside the city limits of Georgetown, TX
☐ The project site is located outside the city limits but inside the ETJ (extra-territorial jurisdiction) of _____.
☐ The project site is not located within any city's limits or ETJ.

10. ☑ The location of the project site is described below. The description provides sufficient detail and clarity so that the TCEQ's Regional staff can easily locate the project and site boundaries for a field investigation.
South of Westinghouse Road, approximately 1,700 feet east of Interstate Highway 35 and approximately 1,500 feet west of Mays Street within the full-purpose city limits of the City of Georgetown.

11. ☑ **Attachment A – Road Map**. A road map showing directions to and the location of the project site is attached. The project location and site boundaries are clearly shown on the map.

12. ☑ **Attachment B - USGS / Edwards Recharge Zone Map**. A copy of the official 7 ½ minute USGS Quadrangle Map (Scale: 1" = 2000') of the Edwards Recharge Zone is attached. The map(s) clearly show:

☑ Project site boundaries.
☑ USGS Quadrangle Name(s).
☑ Boundaries of the Recharge Zone (and Transition Zone, if applicable).
☑ Drainage path from the project site to the boundary of the Recharge Zone.

13. ☑ **The TCEQ must be able to inspect the project site or the application will be returned**. Sufficient survey staking is provided on the project to allow TCEQ regional staff to locate the boundaries and alignment of the regulated activities and the geologic or manmade features noted in the Geologic Assessment.

☑ Survey staking will be completed by this date: 10/05/2020

14. ☑ **Attachment C – Project Description**. Attached at the end of this form is a detailed narrative description of the proposed project. The project description is consistent throughout the application and contains, at a minimum, the following details:

- ☑ Area of the site
- ☑ Offsite areas
- ☑ Impervious cover
- ☑ Permanent BMP(s)
- ☑ Proposed site use
- ☑ Site history
- ☑ Previous development
- ☑ Area(s) to be demolished

15. Existing project site conditions are noted below:

- ☐ Existing commercial site
- ☐ Existing industrial site
- ☐ Existing residential site
- ☐ Existing paved and/or unpaved roads
- ☑ Undeveloped (Cleared)
- ☐ Undeveloped (Undisturbed/Uncleared)
- ☐ Other: _____

Prohibited Activities

16. ☑ I am aware that the following activities are prohibited on the Recharge Zone and are not proposed for this project:

(1) Waste disposal wells regulated under 30 TAC Chapter 331 of this title (relating to Underground Injection Control);

(2) New feedlot/concentrated animal feeding operations, as defined in 30 TAC §213.3;

(3) Land disposal of Class I wastes, as defined in 30 TAC §335.1;

(4) The use of sewage holding tanks as parts of organized collection systems; and

(5) New municipal solid waste landfill facilities required to meet and comply with Type I standards which are defined in §330.41(b), (c), and (d) of this title (relating to Types of Municipal Solid Waste Facilities).

(6) New municipal and industrial wastewater discharges into or adjacent to water in the state that would create additional pollutant loading.

17. ☑ I am aware that the following activities are prohibited on the Transition Zone and are not proposed for this project:

(1) Waste disposal wells regulated under 30 TAC Chapter 331 (relating to Underground Injection Control);

(2) Land disposal of Class I wastes, as defined in 30 TAC §335.1; and

(3) New municipal solid waste landfill facilities required to meet and comply with Type I standards which are defined in §330.41 (b), (c), and (d) of this title.

Administrative Information

18. The fee for the plan(s) is based on:

- [x] For a Water Pollution Abatement Plan or Modification, the total acreage of the site where regulated activities will occur.
- [ ] For an Organized Sewage Collection System Plan or Modification, the total linear footage of all collection system lines.
- [ ] For a UST Facility Plan or Modification or an AST Facility Plan or Modification, the total number of tanks or piping systems.
- [ ] A request for an exception to any substantive portion of the regulations related to the protection of water quality.
- [ ] A request for an extension to a previously approved plan.

19. [x] Application fees are due and payable at the time the application is filed. If the correct fee is not submitted, the TCEQ is not required to consider the application until the correct fee is submitted. Both the fee and the Edwards Aquifer Fee Form have been sent to the Commission's:

- [ ] TCEQ cashier
- [x] Austin Regional Office (for projects in Hays, Travis, and Williamson Counties)
- [ ] San Antonio Regional Office (for projects in Bexar, Comal, Kinney, Medina, and Uvalde Counties)

20. [x] Submit one (1) original and one (1) copy of the application, plus additional copies as needed for each affected incorporated city, groundwater conservation district, and county in which the project will be located. The TCEQ will distribute the additional copies to these jurisdictions. The copies must be submitted to the appropriate regional office.

21. [x] No person shall commence any regulated activity until the Edwards Aquifer Protection Plan(s) for the activity has been filed with and approved by the Executive Director.

SCS APPLICATION ATTACHMENT A - ROAD MAP

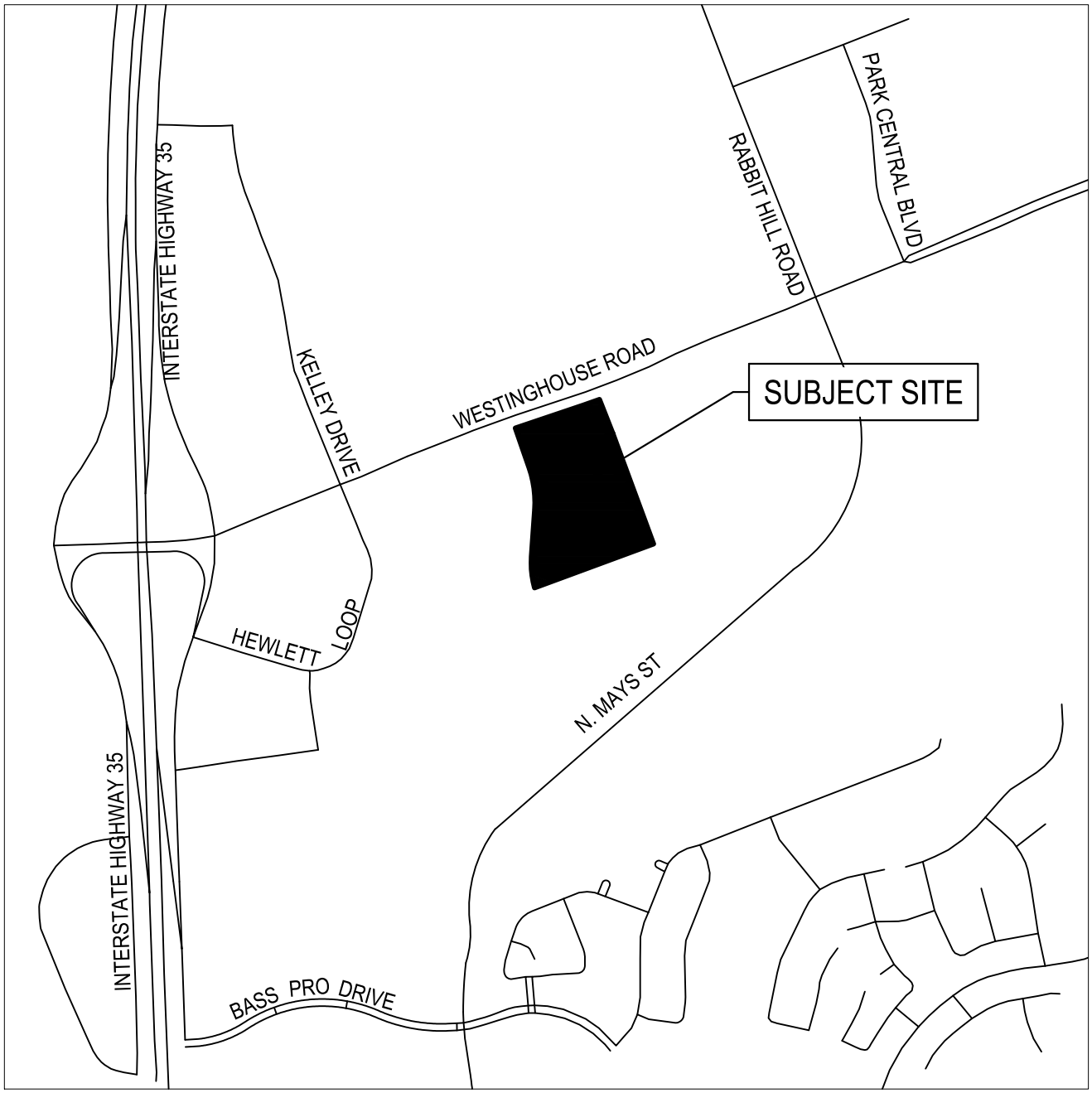

N

1" = 1,000'

U.S. DEPARTMENT OF THE INTERIOR
U.S. GEOLOGICAL SURVEY

The National Map
US Topo

ROUND ROCK QUADRANGLE
TEXAS - WILLIAMSON COUNTY
7.5-MINUTE SERIES

Produced by the United States Geological Survey
North American Datum of 1983 (NAD83)
World Geodetic System of 1984 (WGS84). Projection and 1 000-meter grid:Universal Transverse Mercator, Zone 14R

This map is not a legal document. Boundaries may be generalized for this map scale. Private lands within government reservations may not be shown. Obtain permission before entering private lands.

Imagery....NAIP, September 2016 - November 2016
Roads.... U.S. Census Bureau, 2015
Names....GNIS, 1979 - 2018
Hydrography....National Hydrography Dataset, 2002 - 2011
Contours....National Elevation Dataset, 2002 - 2004
Boundaries....Multiple sources; see metadata file 2016 - 2017

Wetlands....FWS National Wetlands Inventory 1982

MN
GN
3°39′
65 MILS
0°40′
12 MILS
UTM GRID AND 2019 MAGNETIC NORTH DECLINATION AT CENTER OF SHEET

U.S. National Grid
100,000 - m Square ID
PU
Grid Zone Designation
14R

SCALE 1:24 000

KILOMETERS: 1 0.5 0 1 2
METERS: 1000 500 0 1000 2000
MILES: 1 0.5 0 1
FEET: 1000 0 1000 2000 3000 4000 5000 6000 7000 8000 9000 10000

CONTOUR INTERVAL 10 FEET
NORTH AMERICAN VERTICAL DATUM OF 1988

This map was produced to conform with the National Geospatial Program US Topo Product Standard, 2011.
A metadata file associated with this product is draft version 0.6.18

TEXAS
QUADRANGLE LOCATION

1	2	3
4		5
6	7	8

ADJOINING QUADRANGLES
1 Leander NE
2 Georgetown
3 Weir
4 Leander
5 Hutto
6 Jollyville
7 Pflugerville West
8 Pflugerville East

ROAD CLASSIFICATION
Expressway
Secondary Hwy
Ramp
Local Connector
Local Road
4WD
Interstate Route
US Route
State Route

ROUND ROCK, TX
2019

NSN 7643016398009
NGA REF NO. USGSX24K71453

SCS – Ascend Westinghouse

SCS Application Attachment C – Project Description

The Ascend Westinghouse is 14.5 acre 300 unit multifamily apartment complex development located south of Westinghouse Road (also known as County Road 111), approximately 1,700 feet east of Interstate Highway 35 and approximately 1,500 feet west of Mays Street within the full-purpose city limits of the City of Georgetown, Williamson County. The approximate address is 500 Westinghouse Road in the City of Georgetown.

The proposed project will convert the previously undeveloped tract with no impervious cover or proposed demolition into a multifamily apartment complex site. In the proposed condition, impervious cover accounts for 8.00 acres (55.2%) of the total project site, 14.5 acres. No portion of the site is within the boundaries of the 100 year floodplain of any waterway that is within the limits of the federal flood insurance administration FIRM panel number 48491C0485E, Effective September 26th, 2008

This site is located in the Recharge Zone of the Edwards Aquifer. This combined WPAP/SCS application will address this 15.92 acre of drainage area, which contains a proposed 9.01 acres (56.6%) of impervious cover including the proposed right turn lane along Westinghouse Rd with proposed collector road within Right-of-Way. This public street improvements are outside of the project site. Proposed Right-of-Way will be dedicated by City of Georgetown final plat, case number 2020-03-PFP.

A portion of the runoff from the proposed collector road within Right-of-Way will be conveyed into the proposed batch detention basin pond on site. A majority of the drainage basin of this site (PM 1 – Total 11.30 acres) will flow to a batch detention basin, and a portion of drainage basin PM 3, which is 0.13 acres, will flow to a VFS in order to meet TCEQ & City of Georgetown TSS removal requirements. Existing off-site flow from the northern property into the site will be conveyed via a proposed 8'x5' RCB box culvert. The off-site flow is kept separate from the on-site storm sewer system and stormwater management facilities.

Wastewater service will be provided by the Georgetown Utility Systems. The applicant proposes total 1,921 LF of 6" and 8" private wastewater main to serve all multifamily units (7 buildings) on site. Private wastewater main is proposed via tie-in connection to an existing 10" public wastewater main (Chapel Hill Apartment SCS, submitted on 07/03/2020). The existing 10" public wastewater main will tie-in to the San Gabriel Wastewater Treatment Plant. The capability of the receiving treatment facility has been accounted for the future development in The Summit at Westinghouse Planned Unit Development (PUD) per City of Georgetown ordinance no. 2018-03.

Hydrology plan and calculations for the site are located within the construction plans.

For an overview of sub-drainage basins on site, please refer to the included drainage area map.

Wastewater plan and profile for the site are located within the construction plans.

Geologic Assessment

Texas Commission on Environmental Quality

For Regulated Activities on The Edwards Aquifer Recharge/transition Zones and Relating to 30 TAC §213.5(b)(3), Effective June 1, 1999

To ensure that the application is administratively complete, confirm that all fields in the form are complete, verify that all requested information is provided, consistently reference the same site and contact person in all forms in the application, and ensure forms are signed by the appropriate party.

Note: Including all the information requested in the form and attachments contributes to more streamlined technical reviews.

Signature

To the best of my knowledge, the responses to this form accurately reflect all information requested concerning the proposed regulated activities and methods to protect the Edwards Aquifer. My signature certifies that I am qualified as a geologist as defined by 30 TAC Chapter 213.

Print Name of Geologist: Crystal Hall

Telephone: (512) 879-0468

Date: 8/17/2020

Fax: (512) 879-0499

Representing: BGE, Inc. TBPG Registration #50560 (Name of Company and TBPG or TBPE registration number)

Signature of Geologist:

8/25/2020

STATE OF TEXAS
CRYSTAL HALL
GEOLOGY
11409
LICENSED
PROFESSIONAL GEOSCIENTIST

Regulated Entity Name: Westinghouse Tract

Project Information

1. Date(s) Geologic Assessment was performed: 10/09/2019 & 1/08/2020
2. Type of Project:

   ☐ WPAP ☐ AST
   ☐ SCS ☐ UST

3. Location of Project:

   ☒ Recharge Zone
   ☐ Transition Zone
   ☐ Contributing Zone within the Transition Zone

4. ☒ **Attachment A - Geologic Assessment Table**. Completed Geologic Assessment Table (Form TCEQ-0585-Table) is attached.

5. ☒ Soil cover on the project site is summarized in the table below and uses the SCS Hydrologic Soil Groups* (Urban Hydrology for Small Watersheds, Technical Release No. 55, Appendix A, Soil Conservation Service, 1986). If there is more than one soil type on the project site, show each soil type on the site Geologic Map or a separate soils map.

Table 1 - Soil Units, Infiltration Characteristics and Thickness

Soil Name	Group*	Thickness(feet)
Please see attached Table 1		

** Soil Group Definitions (Abbreviated)*

A. Soils having a high infiltration rate when thoroughly wetted.
B. Soils having a moderate infiltration rate when thoroughly wetted.
C. Soils having a slow infiltration rate when thoroughly wetted.
D. Soils having a very slow infiltration rate when thoroughly wetted.

6. ☒ **Attachment B – Stratigraphic Column**. A stratigraphic column showing formations, members, and thicknesses is attached. The outcropping unit, if present, should be at the top of the stratigraphic column. Otherwise, the uppermost unit should be at the top of the stratigraphic column.

7. ☒ **Attachment C – Site Geology**. A narrative description of the site specific geology including any features identified in the Geologic Assessment Table, a discussion of the potential for fluid movement to the Edwards Aquifer, stratigraphy, structure(s), and karst characteristics is attached.

8. ☒ **Attachment D – Site Geologic Map(s)**. The Site Geologic Map must be the same scale as the applicant's Site Plan. The minimum scale is 1": 400'

   Applicant's Site Plan Scale: 1" = _____'
   Site Geologic Map Scale: 1" = 400'
   Site Soils Map Scale (if more than 1 soil type): 1" = 400'

9. Method of collecting positional data:

   ☒ Global Positioning System (GPS) technology.
   ☐ Other method(s). Please describe method of data collection: _____

10. ☒ The project site and boundaries are clearly shown and labeled on the Site Geologic Map.

11. ☒ Surface geologic units are shown and labeled on the Site Geologic Map.

12. ☐ Geologic or manmade features were discovered on the project site during the field investigation. They are shown and labeled on the Site Geologic Map and are described in the attached Geologic Assessment Table.

    ☒ Geologic or manmade features were not discovered on the project site during the field investigation.

13. ☒ The Recharge Zone boundary is shown and labeled, if appropriate.

14. All known wells (test holes, water, oil, unplugged, capped and/or abandoned, etc.): If applicable, the information must agree with Item No. 20 of the WPAP Application Section.

    ☐ There are _____ (#) wells present on the project site and the locations are shown and labeled. (Check all of the following that apply.)
    - ☐ The wells are not in use and have been properly abandoned.
    - ☐ The wells are not in use and will be properly abandoned.
    - ☐ The wells are in use and comply with 16 TAC Chapter 76.

    ☒ There are no wells or test holes of any kind known to exist on the project site.

Administrative Information

15. ☒ Submit one (1) original and one (1) copy of the application, plus additional copies as needed for each affected incorporated city, groundwater conservation district, and county in which the project will be located. The TCEQ will distribute the additional copies to these jurisdictions. The copies must be submitted to the appropriate regional office.

Geologic Assessment Attachments

- Table 1 – Soil Units, Infiltration Characteristics and Thickness
- Attachment A – Geologic Assessment Table
- Attachment B – Stratigraphic Column
- Attachment C – Site Geology
- Attachment D – Site Geologic Maps
- Attachment E – Westinghouse Site: Drainage Area Exhibit

Table 1 – Soil Units, Infiltration Characteristics and Thickness

TABLE 1
Soil Units, Infiltration Characteristics and Thickness

Soil Name	Group	Thickness
Denton silty clay, 1 to 3 percent slopes (DnB)	D	80 inches
Fairlie clay, 1 to 2 percent slopes (FaB)	D	54 inches
Ferris-Heiden complex, 5 to 15 percent slopes, moderately eroded (FhF2)	D	60 inches
Heiden clay 2 to 5 percent slopes, 2 to 5 percent slopes, moderately eroded (HedC2)	D	80 inches
Heiden clay 5 to 8 percent slopes, eroded (HeiD3)	D	80 inches
Houston Black Clay, 1 to 3 percent slopes (HoB)	D	80 inches

8/25/2020

STATE OF TEXAS
CRYSTAL HALL
GEOLOGY
11409
LICENSED
PROFESSIONAL GEOSCIENTIST

Attachment A – Geologic Assessment Table

GEOLOGIC ASSESSMENT TABLE			PROJECT NAME:																		
LOCATION			FEATURE CHARACTERISTICS												EVALUATION			PHYSICAL SETTING			
1A	1B *	1C*	2A	2B	3	4			5	5A	6	7	8A	8B	9	10		11		12
FEATURE ID	LATITUDE	LONGITUDE	FEATURE TYPE	POINTS	FORMATION	DIMENSIONS (FEET)			TREND (DEGREES)	AVG	DENSITY (NO/FT)	APERTURE (FEET)	INFILL	RELATIVE INFILTRATION RATE	TOTAL	SENSITIVITY		CATCHMENT AREA (ACRES)		TOPOGRAPHY
						X	Y	Z		10						<40	≥40	<1.6	≥1.6	
Fault	30.57643	-97.685062	F	20	Kgt/Kdr				N40W	0			V	5	25	X		X		Hillside

* DATUM:

2A TYPE	TYPE	2B POINTS
C	Cave	30
SC	Solution cavity	20
SF	Solution-enlarged fracture(s)	20
F	Fault	20
O	Other natural bedrock features	5
MB	Manmade feature in bedrock	30
SW	Swallow hole	30
SH	Sinkhole	20
CD	Non-karst closed depression	5
Z	Zone, clustered or aligned features	30

8A INFILLING	
N	None, exposed bedrock
C	Coarse - cobbles, breakdown, sand, gravel
O	Loose or soft mud or soil, organics, leaves, sticks, dark colors
F	Fines, compacted clay-rich sediment, soil profile, gray or red colors
V	Vegetation. Give details in narrative description
FS	Flowstone, cements, cave deposits
X	Other materials

12 TOPOGRAPHY
Cliff, Hilltop, Hillside, Drainage, Floodplain, Streambed

I have read, I understood, and I have followed the Texas Commission on Environmental Quality's Instructions to Geologists. The information presented here complies with that document and is a true representation of the conditions observed in the field. My signature certifies that I am qualified as a geologist as defined by 30 TAC Chapter 213.

Date: 01/16/2020

Sheet 1 of 1

TCEQ-0585-Table (Rev. 10-01-04)

8/25/2020

STATE OF TEXAS
CRYSTAL HALL
GEOLOGY
11409
LICENSED
PROFESSIONAL GEOSCIENTIST

Attachment B – Stratigraphic Column

ATTACHMENT B
Stratigraphic Column
Westinghouse Tract Property
Georgetown, Texas

Hydrologic Subdivision	Formation	Member	Thickness (feet)	Lithology
Confining Layer	Del Rio		70	greenish-gray to tan, soft, plastic, laminated and gypsiferous mudstone or shale
Edwards Aquifer	Georgetown	E	20	light gray, hard, crystalline, thin-bedded limestone
		D	10	interbedded, chalky limestone and light gray marl

Source: Housh, 2007

8/25/2020

STATE OF TEXAS
CRYSTAL HALL
GEOLOGY
11409
LICENSED
PROFESSIONAL GEOSCIENTIST

Attachment C – Site Geology

Site Geology – A Narrative Description of Site Specific Geology of the Westinghouse Tract

The Geologic Assessment (GA) on the Westinghouse Tract was conducted by Ms. Crystal Hall, P.G., Ms. Heidi Oertli, and Mr. Reed Petrosky, of BGE, Inc. (BGE) on October 9, 2019 and January 8, 2020. The Westinghouse Tract (herein referred to as "subject property") consists of an approximate 44-acre property located between Westinghouse Road and North Mays Street, within the City of Georgetown extraterritorial jurisdiction (ETJ), Williamson County, Texas. The subject property is located on the *Round Rock, Texas*, U.S. Geological Survey (USGS) 7.5-minute topographic map (2015).

The subject property is currently used for ranching and contains a large spoils pile. According to aerial photography, the spoils pile was deposited on the subject property between 1995 and 2002. Materials in spoils pile, exposed at the surface, included large boulders, gravel, and soil. Drainage on the western portion of the subject property is via overland sheet flow, draining south and on the eastern portion of the tract, is through a small, unnamed ephemeral stream that drains south, towards Mays Street. According to the National Hydrography Dataset, an ephemeral stream is mapped crossing the center of the subject property; however, this stream is no longer present due to the addition of the large spoils pile. A water quality pond containing a manhole was observed on the northeastern side of the subject property. The soil in this location is between 20 and 30 feet deep per geotechnical data (completed by others). Due to the depth of the soil, it is believed that the manhole does not extend beyond the soil into the underlying bedrock. The subject property is vegetated with grass and shrubs. Tracts adjacent to the subject property are a mix of residential, commercial, and agricultural properties. The subject property elevation ranges between approximately 800 feet above mean sea level (msl) to about 850 feet msl.

No water wells were observed on the subject property during the site visit. Upon review of data from TCEQ and the Texas Water Development Board (TWDB), four water wells are recorded within 500 feet of the subject property. Two of these wells are mapped by TCEQ and two are mapped by TWDB. Although the mapped locations appear to be four separate wells, discrepancies in the data indicate that only two wells exist. The two water wells are located up gradient from the subject property, north of Westinghouse Road.

No surface geology was observed during the field visit. All geologic units on the subject property are obscured by the thick soil cover, spoils pile, and vegetation. The geologic map *Bedrock Geology of Round Rock and Surrounding Areas, Williamson and Travis Counties, Texas* was utilized to identify underlying geology. Geologic units present at the subject property have been identified as the Del Rio Formation and the Georgetown Formation.

The Del Rio Formation is a greenish-gray to tan, soft, plastic, laminated and gypsiferous mudstone or shale. The Del Rio Formation has an approximate thickness of 70 feet and forms the upper confining unit for the Edwards Aquifer. Fossils in the lower half are typified by numerous individuals of *Ilygmatogyra arietina* (Roemer) and the upper half contains many *Texigryphaea graysonana*. The Georgetown Formation is an inter-bedded, calcareous, fossiliferous, limestone that forms the upper unit for the Edwards Aquifer. The formation has been subdivided into five members (A-E) based on lithology and fossil assemblages. The members mapped on the subject property are D and E. Member D consists of approximately 10 feet of interbedded, chalky limestone and light gray marl. The characteristic fossil within Member D is *Mortoniceras (Angolaites) wintoni*. Member E is the uppermost member and consists of approximately 20 feet of light gray, hard, crystalline, thin-bedded limestone. The characteristic fossil of Member E is *Mariella (Wintonia) brazoensis*.

The subject property is located entirely within the Edwards Aquifer Recharge Zone. The Recharge/ Transition Zone boundary is located approximately 350 feet northeast of the subject property. Based on published literature, one mapped fault crosses the subject property, trending N40W. Although identified in literature, no evidence of the faulting was observed in the field (such as fault breccia or slickensides) while completing transects due to the large spoils pile on the subject property. Therefore, the fault location noted on the attached map is approximate. The fault is associated with the Balcones Fault Zone which consists of normal, high-angle faults that are generally down thrown to the southeast.

Geologic assessments completed within the jurisdiction of the City of Georgetown are also required to consider the Endangered Species Act 4(d) Rule for Threatened Georgetown Salamander (*Eurycea naufragia*). Additional requirements include the identification of all springs and streams on the subject property. No springs were identified during the site visits within the subject property, but one stream was identified and mapped. Per delineation and exhibit provided by Brian J. Grace, P.E., the drainage area of the stream does not exceed 64 acres until the southern property boundary. Per City of Georgetown UDC, no stream buffer requirements apply to the property.

Karst zone data obtained from the U.S. Fish and Wildlife Service (USFWS) indicates that the subject property is within Karst Zone 3. This zone is defined as "areas that probably do not contain endangered cave fauna." No karst features were observed during the site visit; however, it should be noted that the spoils pile prohibited view of the natural surface. However, following the review of (USFWS) data and the field visit, there is little potential for the subject property to contain endangered cave species habitat.

8/25/2020

STATE OF TEXAS
CRYSTAL HALL
GEOLOGY
11409
LICENSED
PROFESSIONAL GEOSCIENTIST

Attachment D – Site Geologic Maps

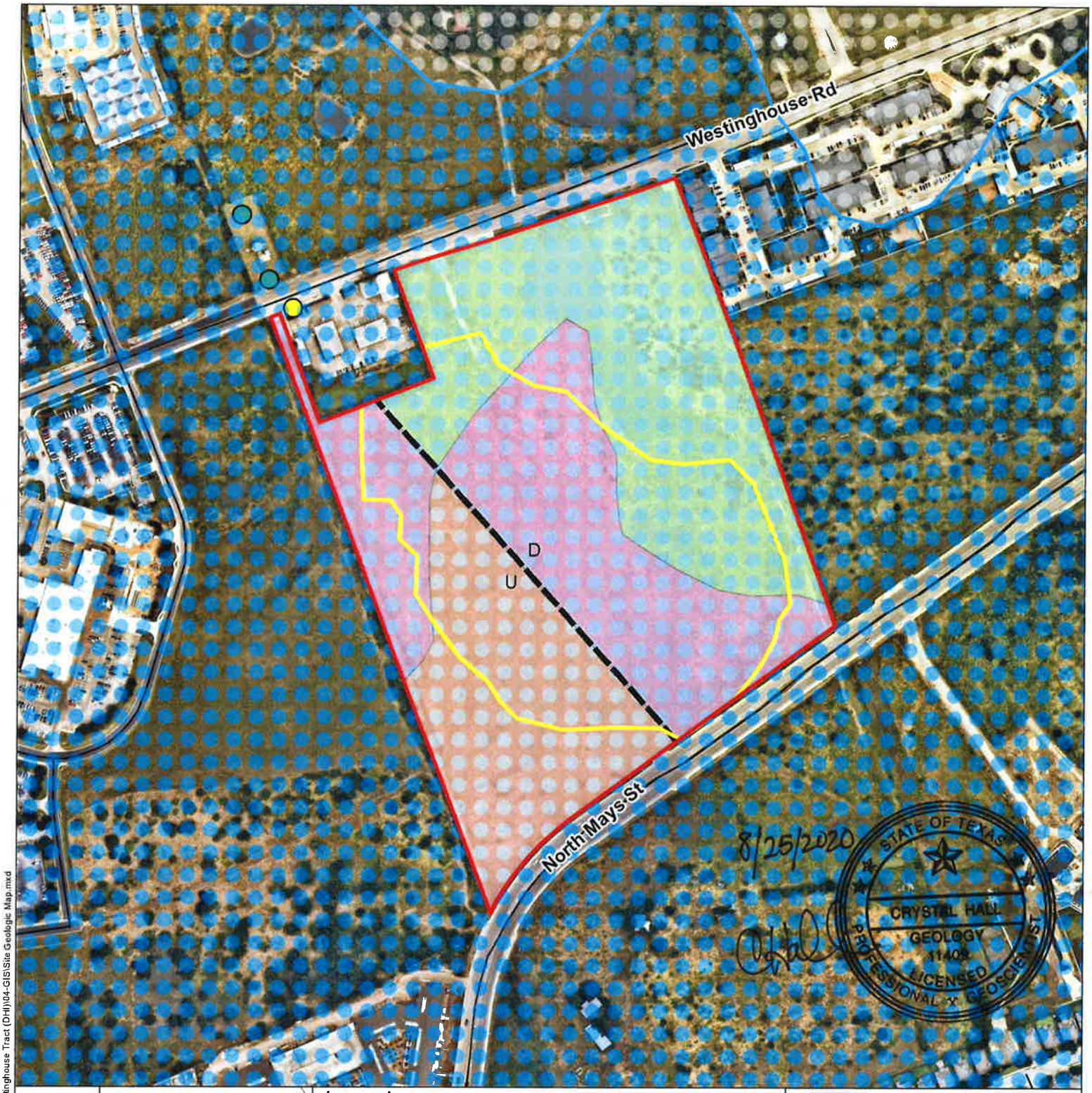

Vicinity Map

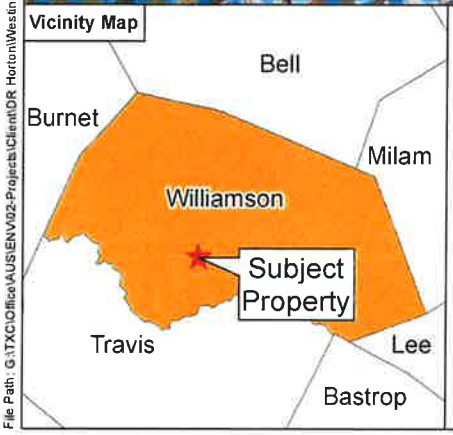

Legend

- Subject Property
- Spoils Pile
- Fault
- Kdr: Del Rio Formation
- KgtD: Georgetown Formation Member D
- KgtE: Georgetown Formation Member E
- Edwards Aquifer Recharge Zone
- Edwards Aquifer Transition Zone
- Water Well (TWDB)
- Water Well (TCEQ)
- Roadway

0 200 400
Feet

BGE, Inc.
101 West Louis Henna Blvd, Suite 400
Austin, TX 78728
Tel: 512-879-0400 Fax: 512-879-0499
www.bgeinc.com

Westinghouse Tract

Site Geologic Map

Williamson County, TX

Date: August 2020 | Proj. No: 7222-00

File Path: G:\TXC\Office\AUS\ENV\02-Projects\Client\DR Horton\Westinghouse Tract (DHI)\04-GIS\Site Geologic Map.mxd

GIS Analyst: rpelrosky

Data Source: TxDOT 2019, Nearmap 2019

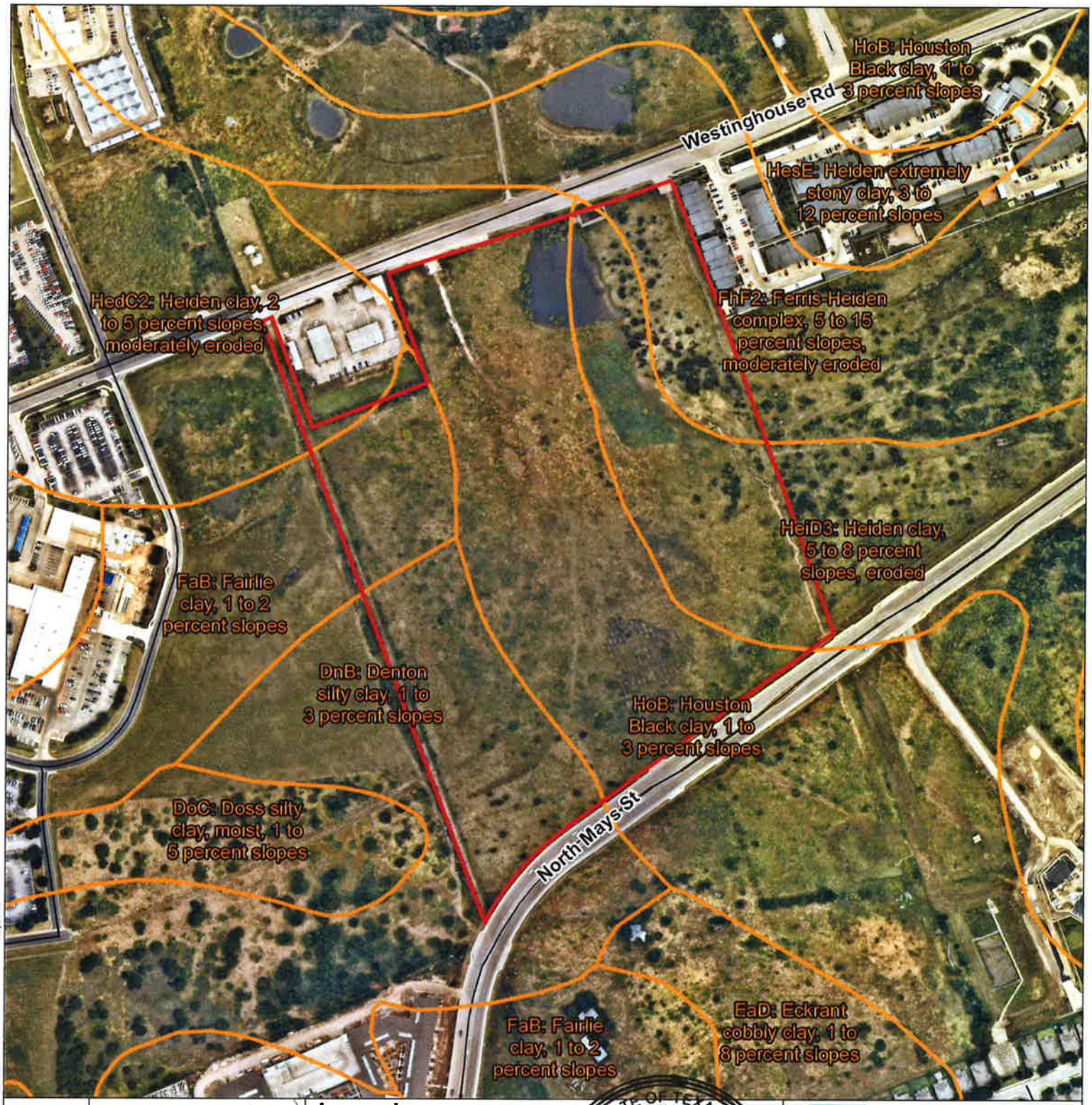

Vicinity Map

Legend

- Subject Property
- Soil Map Units (NRCS)
- Roadway

8/25/2020

STATE OF TEXAS
CRYSTAL HALL
GEOLOGY
11409
LICENSED
PROFESSIONAL GEOSCIENTIST

0 200 400
Feet

BGE, Inc.
101 West Louis Henna Blvd, Suite 400
Austin, TX 78728
Tel: 512-879-0400 Fax: 512-879-0499
www.bgeinc.com

Westinghouse Tract

Site Soils per Online Databases Map

Williamson County, TX

Date: August 2020 | Proj. No: 7222-00

File Path: G:\TXC\Office\AUS\ENV\02-Projects\Client\DR Horton\Westinghouse Tract (DHI)\04-GIS\Site Soil Map.mxd

GIS Analyst: rpetrosky

Data Source: TxDOT 2019, Nearmap 2019

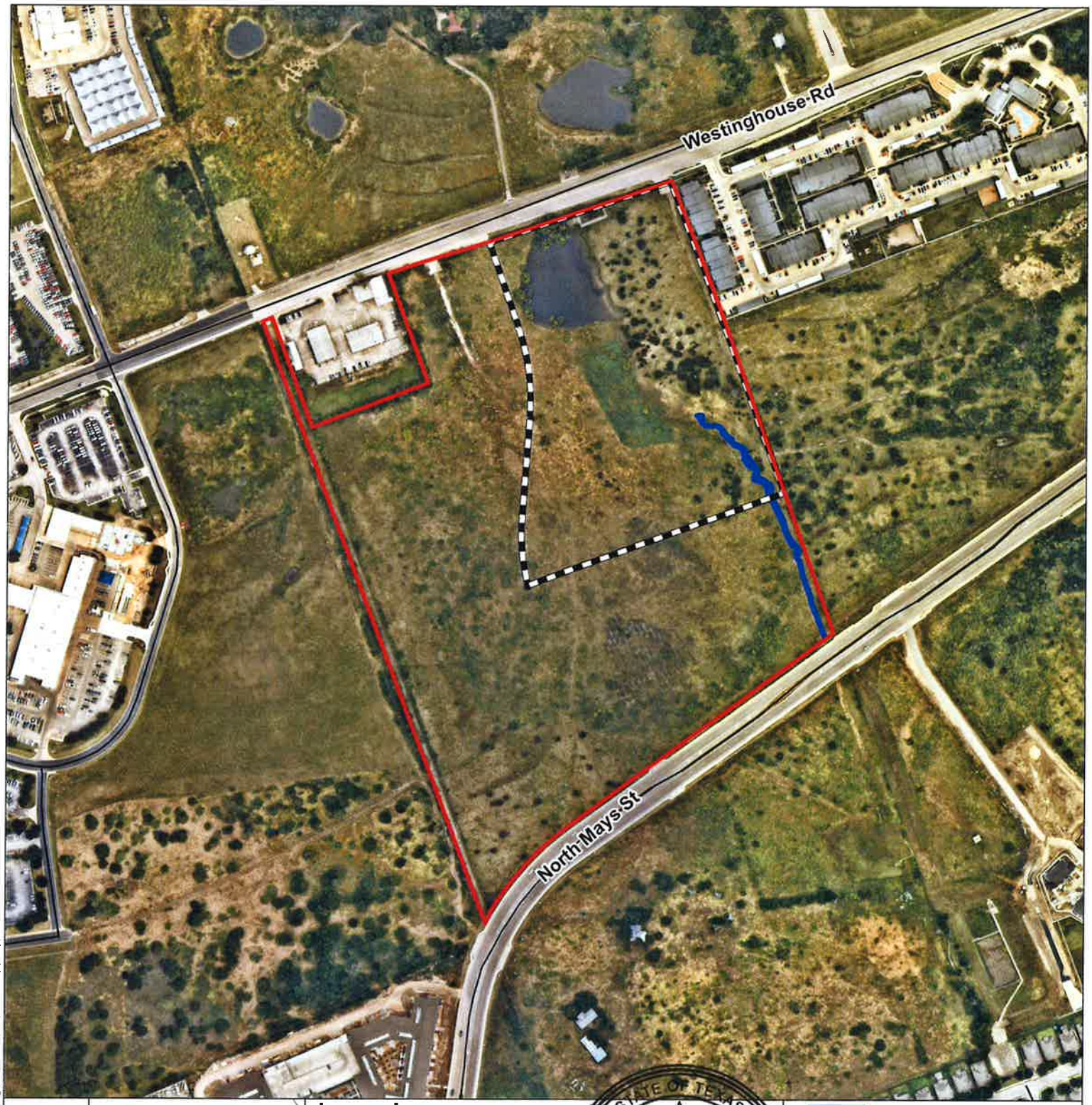

Vicinity Map

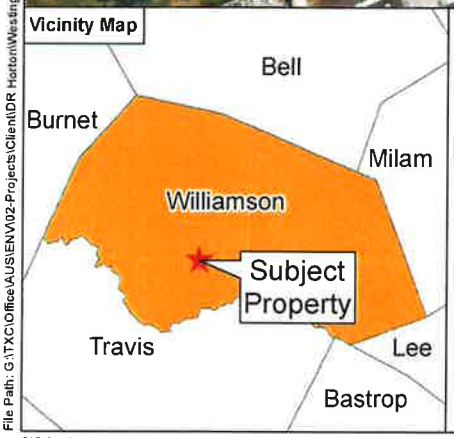

Legend

- Subject Property
- Site Plan Boundary
- Field Verified Stream
- Roadway

Note: No springs were identified on the Subject Property.

8/25/2020

STATE OF TEXAS
CRYSTAL HALL
GEOLOGY
11409
LICENSED
PROFESSIONAL GEOSCIENTIST

0 200 400
Feet

BGE, Inc.
101 West Louis Henna Blvd, Suite 400
Austin, TX 78728
Tel: 512-879-0400 Fax: 512-879-0499
www.bgeinc.com

Westinghouse Tract

USFWS 4(d) Map

Williamson County, TX

Date: August 2020 | Proj. No: 7222-00

File Path: G:\TXC\Office\AUS\ENV\02-Projects\Client\DR Horton\Westinghouse Tract (DHI)\04-GIS\4(d) Map.mxd

GIS Analyst: rpetrosky

Data Source: TxDOT 2019, Nearmap 2019

Attachment E – Westinghouse Site: Drainage Area Exhibit

V:\02Proposals\DR Horton\Horton MF Deals\Westinghouse\Drainage\2020-08-18 - Exhibit - Drainage Area - Jurisdictional Waters.dwg, 8/24/2020 9:33 AM, bgrace

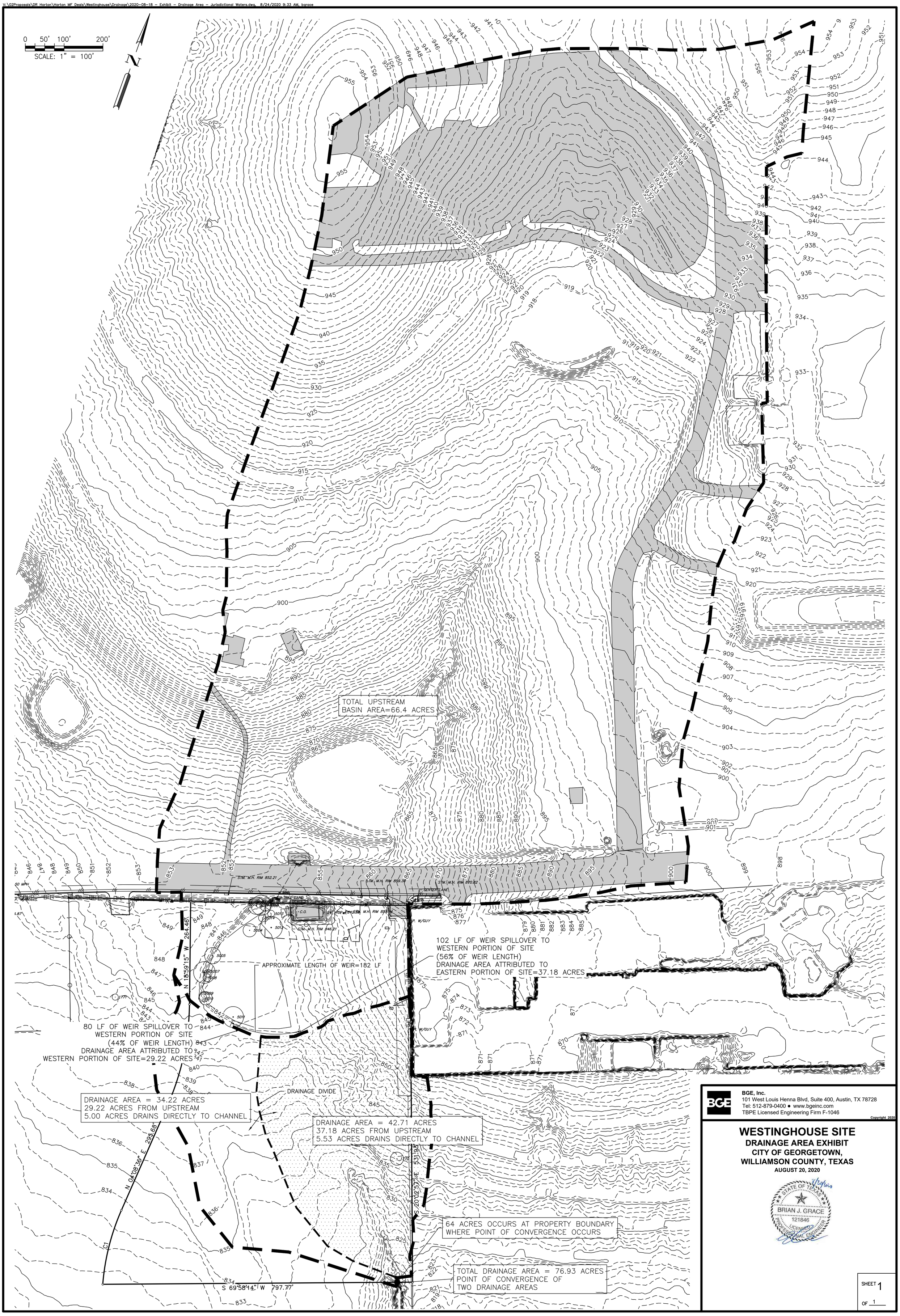

BGE, Inc.
101 West Louis Henna Blvd, Suite 400, Austin, TX 78728
Tel: 512-879-0400 ● www.bgeinc.com
TBPE Licensed Engineering Firm F-1046

Copyright 2020

WESTINGHOUSE SITE

DRAINAGE AREA EXHIBIT

CITY OF GEORGETOWN, WILLIAMSON COUNTY, TEXAS

AUGUST 20, 2020

STATE OF TEXAS
BRIAN J. GRACE
121846
LICENSED
PROFESSIONAL ENGINEER
8/20/2020

SHEET 1
OF 1

Organized Sewage Collection System Application

Texas Commission on Environmental Quality

For Regulated Activities on the Edwards Aquifer Recharge Zone and Relating to 30 TAC §213.5(c), Effective June 1, 1999

To ensure that the application is administratively complete, confirm that all fields in the form are complete, verify that all requested information is provided, consistently reference the same site and contact person in all forms in the application, and ensure forms are signed by the appropriate party.

Note: Including all the information requested in the form and attachments contributes to more streamlined technical reviews.

Regulated Entity Name: Ascend Westinghouse

1. ☑ **Attachment A – SCS Engineering Design Report**. This Engineering Design Report is provided to fulfill the requirements of 30 TAC Chapter 217, including 217.10 of Subchapter A, §§217.51 – 217.70 of Subchapter C, and Subchapter D as applicable, and is required to be submitted with this SCS Application Form.

Customer Information

2. The entity and contact person responsible for providing the required engineering certification of testing for this sewage collection system upon completion (including private service connections) and every five years thereafter to the appropriate TCEQ region office pursuant to 30 TAC §213.5(c) is:

   Contact Person: Todd Jones
   Entity: DHI Communities
   Mailing Address: 1341 Horton Circle
   City, State: Arlington, TX Zip: 76011
   Telephone: 817-390-8200 Fax: _____
   Email Address: btjones1@drhorton.com
   The appropriate regional office must be informed of any changes in this information within 30 days of the change.

3. The engineer responsible for the design of this sewage collection system is:

   Contact Person: Brian Grace, P.E.
   Texas Licensed Professional Engineer's Number: 121846
   Entity: BGE, Inc.
   Mailing Address: 1701 Directors Blvd, Suite 1000
   City, State: Austin, TX Zip: 78744
   Telephone: 512-879-0400 Fax: _____
   Email Address: bgrace@bgeinc.com

Project Information

4. Anticipated type of development to be served (estimated future population to be served, plus adequate allowance for institutional and commercial flows):

   - [ ] Residential: Number of single-family lots: _____
   - [x] Multi-family: Number of residential units: 300
   - [ ] Commercial
   - [ ] Industrial
   - [ ] Off-site system (not associated with any development)
   - [ ] Other: _____

5. The character and volume of wastewater is shown below:

100 % Domestic	170,674 gallons/day
_____% Industrial	_____ gallons/day
_____% Commingled	_____ gallons/day

   Total gallons/day: 170,674

6. Existing and anticipated infiltration/inflow is 14,500 gallons/day. This will be addressed by: PVC SDR26 gasketed wastewater lines and coated/rubber gasketed manholes installed and tested as specified in Chapter 317 Title 30 TAC.
7. A Water Pollution Abatement Plan (WPAP) is required for construction of any associated commercial, industrial or residential project located on the Recharge Zone.

   - [ ] The WPAP application for this development was approved by letter dated _____. A copy of the approval letter is attached.
   - [x] The WPAP application for this development was submitted to the TCEQ on 9/17/20, but has not been approved.
   - [ ] A WPAP application is required for an associated project, but it has not been submitted.
   - [ ] There is no associated project requiring a WPAP application.

8. Pipe description:

Table 1 - Pipe Description

Pipe Diameter(Inches)	*Linear Feet (1)*	*Pipe Material (2)*	*Specifications (3)*
6"	1,161'	PVC	SDR-26
8"	760'	PVC	SDR-26

Total Linear Feet: 1,921 LF

(1) Linear feet - Include stub-outs and double service connections. Do not include private service laterals.
(2) Pipe Material - If PVC, state SDR value.
(3) Specifications - ASTM / ANSI / AWWA specification and class numbers should be included.

9. The sewage collection system will convey the wastewater to the San Gabriel WW Treatment Plant. The treatment facility is:

   ☑ Existing (Proposed by other engineers)
   ☐ Proposed

10. All components of this sewage collection system will comply with:

   ☑ The City of Georgetown standard specifications.
   ☐ Other. Specifications are attached.

11. ☑ No force main(s) and/or lift station(s) are associated with this sewage collection system.

   ☐ A force main(s) and/or lift station(s) is associated with this sewage collection system and the **Lift Station/Force Main System Application** form (TCEQ-0624) is included with this application.

Alignment

12. ☑ There are no deviations from uniform grade in this sewage collection system without manholes and with open cut construction.

13. ☑ There are no deviations from straight alignment in this sewage collection system without manholes.

   ☐ **Attachment B - Justification and Calculations for Deviation in Straight Alignment without Manholes**. A justification for deviations from straight alignment in this sewage collection system without manholes with documentation from pipe manufacturer allowing pipe curvature is attached.

   ☐ For curved sewer lines, all curved sewer line notes (TCEQ-0596) are included on the construction plans for the wastewater collection system.

Manholes and Cleanouts

14. ☑ Manholes or clean-outs exist at the end of each sewer line(s). These locations are listed below: (Please attach additional sheet if necessary)

Table 2 - Manholes and Cleanouts

Line	*Shown on Sheet*	*Station*	*Manhole or Clean-out?*
WWL A	52 Of 76	STA 1+61.36	Manhole
WWL A	52 Of 76	STA 2+23.01	Manhole
WWL A	52 Of 76	STA 3+13.06	Cleanout
WWL A	52 Of 76	STA 5+09.31	Cleanout
WWL A	53 Of 76	STA 7+77.24	Manhole
WWL A	53 Of 76	STA 9+65.64	Manhole
WWL A	53 Of 76	STA 10+56.33	Cleanout

Line	*Shown on Sheet*	*Station*	*Manhole or Clean-out?*
WWL B	54 Of 76	STA 2+28.56	Cleanout
WWL B	54 Of 76	STA 4+98.14	Manhole
Please see attached additional sheet for more manholes and cleanouts.			

15. ☑ Manholes are installed at all Points of Curvature and Points of Termination of a sewer line.

16. ☑ The maximum spacing between manholes on this project for each pipe diameter is no greater than:

Pipe Diameter (inches)	Max. Manhole Spacing (feet)
6 - 15	500
16 - 30	800
36 - 48	1000
≥54	2000

☐ **Attachment C – Justification for Variance from Maximum Manhole Spacing**. The maximum spacing between manholes on this project (for each pipe diameter used) is greater than listed in the table above. A justification for any variance from the maximum spacing is attached, and must include a letter from the entity which will operate and maintain the system stating that it has the capability to maintain lines with manhole spacing greater than the allowed spacing.

17. ☐ All manholes will be monolithic, cast-in-place concrete.

☑ The use of pre-cast manholes is requested for this project. The manufacturer's specifications and construction drawings, showing the method of sealing the joints, are attached.

Site Plan Requirements

Items 18 - 25 must be included on the Site Plan.

18. ☑ The Site Plan must have a minimum scale of 1" = 400'.

Site Plan Scale: 1" = 50 '.

19. ☑ The Site Plan must include the sewage collection system general layout, including manholes with station numbers, and sewer pipe stub outs (if any). Site plan must be overlain by topographic contour lines, using a contour interval of not greater than ten feet and showing the area within both the five-year floodplain and the 100-year floodplain of any drainage way.

20. Lateral stub-outs:

☑ The location of all lateral stub-outs are shown and labeled.
☐ No lateral stub-outs will be installed during the construction of this sewer collection system.

21. Location of existing and proposed water lines:

- [x] The entire water distribution system for this project is shown and labeled.
- [ ] If not shown on the Site Plan, a Utility Plan is provided showing the entire water and sewer systems.
- [ ] There will be no water lines associated with this project.

22. 100-year floodplain:

- [x] After construction is complete, no part of this project will be in or cross a 100-year floodplain, either naturally occurring or manmade. (Do not include streets or concrete-lined channels constructed above of sewer lines.)
- [ ] After construction is complete, all sections located within the 100-year floodplain will have water-tight manholes. These locations are listed in the table below and are shown and labeled on the Site Plan. (Do not include streets or concrete-lined channels constructed above sewer lines.)

Table 3 - 100-Year Floodplain

Line	*Sheet*	*Station*
	of	to
	of	to
	of	to
	of	to

23. 5-year floodplain:

- [x] After construction is complete, no part of this project will be in or cross a 5-year floodplain, either naturally occurring or man-made. (Do not include streets or concrete-lined channels constructed above sewer lines.)
- [ ] After construction is complete, all sections located within the 5-year floodplain will be encased in concrete or capped with concrete. These locations are listed in the table below and are shown and labeled on the Site Plan. (Do not include streets or concrete-lined channels constructed above sewer lines.)

Table 4 - 5-Year Floodplain

Line	*Sheet*	*Station*
	of	to
	of	to
	of	to
	of	to

24. [x] Legal boundaries of the site are shown.

25. [x] The ***final plans and technical specifications*** are submitted for the TCEQ's review. Each sheet of the construction plans and specifications are dated, signed, and sealed by the Texas Licensed Professional Engineer responsible for the design on each sheet.

Items 26 - 33 must be included on the Plan and Profile sheets.

26. ☑ All existing or proposed water line crossings and any parallel water lines within 9 feet of sewer lines are listed in the table below. These lines must have the type of pressure rated pipe to be installed shown on the plan and profile sheets. Any request for a variance from the required pressure rated piping at crossings must include a variance approval from 30 TAC Chapter 290.

☐ There will be no water line crossings.
☑ There will be no water lines within 9 feet of proposed sewer lines.

Table 5 - Water Line Crossings

Line	*Station or Closest Point*	*Crossing or Parallel*	*Horizontal Separation Distance*	*Vertical Separation Distance*
WWL A	STA 2+57.26	Crossing	N/A	7.5'
WWL A	STA 10+21.45	Crossing	N/A	4.0'
WWL B	STA 2+25.88	Crossing	N/A	6.4'
WWL B	STA 2+30.88	Crossing	N/A	6.3'
WWL E	STA 1+24.94	Crossing	N/A	2.6'
WWL F	STA 1+22.63	Crossing	N/A	4.3'
WWL G	STA 1+17.24	Crossing	N/A	3.4'

27. Vented Manholes:

☑ **No part** of this sewer line is within the 100-year floodplain and vented manholes are not required by 30 TAC Chapter 217.
☐ **A portion** of this sewer line is within the 100-year floodplain and vented manholes will be provided at less than 1500 foot intervals. These water-tight manholes are listed in the table below and labeled on the appropriate profile sheets.
☐ **A portion** of this sewer line is within the 100-year floodplain and an alternative means of venting shall be provided at less than 1500 feet intervals. A description of the alternative means is described on the following page.
☐ **A portion** of this sewer line is within the 100-year floodplain; however, there is no interval longer than 1500 feet located within. No vented manholes will be used.

Table 6 - Vented Manholes

Line	*Manhole*	*Station*	*Sheet*

Line	*Manhole*	*Station*	*Sheet*

28. Drop manholes:

☐ There are no drop manholes associated with this project.
☑ Sewer lines which enter new or existing manholes or "manhole structures" higher than 24 inches above the manhole invert are listed in the table below and labeled on the appropriate profile sheets. These lines meet the requirements of 30 TAC §217.55(l)(2)(H).

Table 7 - Drop Manholes

Line	*Manhole*	*Station*	*Sheet*
WWL A	WWL A - MH1	STA 1+61.36	52 of 76
WWL B	WWL B - MH2	STA 6+41.23	55 of 76

29. Sewer line stub-outs (For proposed extensions):

☐ The placement and markings of all sewer line stub-outs are shown and labeled.
☑ No sewer line stub-outs are to be installed during the construction of this sewage collection system.

30. Lateral stub-outs (For proposed private service connections):

☑ The placement and markings of all lateral stub-outs are shown and labeled.
☐ No lateral stub-outs are to be installed during the construction of this sewage collection system.

31. Minimum flow velocity (From Appendix A)

☑ Assuming pipes are flowing full; all slopes are designed to produce flows equal to or greater than 2.0 feet per second for this system/line.

32. Maximum flow velocity/slopes (From Appendix A)

☑ Assuming pipes are flowing full, all slopes are designed to produce maximum flows of less than or equal to 10 feet per second for this system/line.
☐ **Attachment D – Calculations for Slopes for Flows Greater Than 10.0 Feet per Second.** Assuming pipes are flowing full, some slopes produce flows which are greater than 10 feet per second. These locations are listed in the table below. Calculations are attached.

Table 8 - Flows Greater Than 10 Feet per Second

Line	*Profile Sheet*	*Station to Station*	*FPS*	*% Slope*	*Erosion/Shock Protection*

33. Assuming pipes are flowing full, where flows are ≥ 10 feet per second, the provisions noted below have been made to protect against pipe displacement by erosion and/or shock under 30 TAC §217.53(l)(2)(B).

☐ Concrete encasement shown on appropriate Plan and Profile sheets for the locations listed in the table above.

☐ Steel-reinforced, anchored concrete baffles/retards placed every 50 feet shown on appropriate Plan and Profile sheets for the locations listed in the table above.

☐ N/A

Administrative Information

34. ☑ The final plans and technical specifications are submitted for TCEQ review. Each sheet of the construction plans and specifications are dated, signed, and sealed by the Texas Licensed Professional Engineer responsible for the design on each sheet.

35. ☑ Standard details are shown on the detail sheets, which are dated, signed, and sealed by the Texas Licensed Professional Engineer, as listed in the table below:

Table 9 - Standard Details

Standard Details	*Shown on Sheet*
Lateral stub-out marking **[Required]**	57 of 76
Manhole, showing inverts comply with 30 TAC §217.55(l)(2) **[Required]**	57 of 76
Alternate method of joining lateral to existing SCS line for potential future connections **[Required]**	57 of 76
Typical trench cross-sections **[Required]**	57 of 76
Bolted manholes **[Required]**	57 of 76
Sewer Service lateral standard details **[Required]**	57 of 76
Clean-out at end of line **[Required, if used]**	57 of 76
Baffles or concrete encasement for shock/erosion protection **[Required, if flow velocity of any section of pipe >10 fps]**	N/A of N/A
Detail showing Wastewater Line/Water Line Crossing **[Required, if crossings are proposed]**	57 of 76
Mandrel detail or specifications showing compliance with 30 TAC §217.57(b) and (c) **[Required, if Flexible Pipe is used]**	N/A of N/A

Standard Details	*Shown on Sheet*
Drop manholes **[Required, if a pipe entering a manhole is more than 24 inches above manhole invert]**	57 of 76

36. ☑ All organized sewage collection system general construction notes (TCEQ-0596) are included on the construction plans for this sewage collection system.

37. ☑ All proposed sewer lines will be sufficiently surveyed/staked to allow an assessment prior to TCEQ executive director approval. If the alignments of the proposed sewer lines are not walkable on that date, the application will be deemed incomplete and returned.

    ☐ Survey staking was completed on this date: _____

38. ☑ Submit one (1) original and one (1) copy of the application, plus additional copies as needed for each affected incorporated city, groundwater conservation district, and county in which the project will be located. The TCEQ will distribute the additional copies to these jurisdictions. The copies must be submitted to the appropriate regional office.

39. ☑ Any modification of this SCS application will require TCEQ approval, prior to construction, and may require submission of a revised application, with appropriate fees.

Signature

To the best of my knowledge, the responses to this form accurately reflect all information requested concerning the proposed regulated activities and methods to protect the Edwards Aquifer. This **Organized Sewage Collection System Application** is hereby submitted for TCEQ review and executive director approval. The system was designed in accordance with the requirements of 30 TAC §213.5(c) and 30 TAC §217 and prepared by:

Print Name of Licensed Professional Engineer: Brian Grace, P.E.

Date: 9/29/2020

Place engineer's seal here:

STATE OF TEXAS
BRIAN J. GRACE
121846
LICENSED
PROFESSIONAL ENGINEER

Signature of Licensed Professional Engineer:

Appendix A-Flow Velocity Table

Flow Velocity (Flowing Full) All gravity sewer lines on the Edwards Aquifer Recharge Zone shall be designed and constructed with hydraulic slopes sufficient to give a velocity when flowing full of not less than 2.0 feet per second, and not greater than 10 feet per second. The grades shown in the following table are based on Manning's formula and an n factor of 0.013 and shall be the minimum and maximum acceptable slopes unless provisions are made otherwise.

Table 10 - Slope Velocity

Pipe Diameter(Inches)	*% Slope required for minimum flow velocity of 2.0 fps*	*% Slope which produces flow velocity of 10.0 fps*
6	0.50	12.35
8	0.33	8.40
10	0.25	6.23
12	0.20	4.88
15	0.15	3.62
18	0.11	2.83
21	0.09	2.30
24	0.08	1.93
27	0.06	1.65
30	0.055	1.43
33	0.05	1.26
36	0.045	1.12
39	0.04	1.01
>39	*	*

**For lines larger than 39 inches in diameter, the slope may be determined by Manning's formula (as shown below) to maintain a minimum velocity greater than 2.0 feet per second when flowing full and a maximum velocity less than 10 feet per second when flowing full.*

$$v = \frac{1.49}{n} \times R_h^{0.67} \times \sqrt{S}$$

Figure 1 - Manning's Formula

Where:

v = velocity (ft/sec)
n = Manning's roughness coefficient (0.013)
Rh = hydraulic radius (ft)
S = slope (ft/ft)

BROWN & GAY ENGINEERS

Organized Sewage Collection System Application (TCEQ-0582)

Additional Sheet

Manholes and Cleanouts

Table 2 - Manholes and Cleanouts (Continued)

Line	*Shown on Sheet*	*Station*	*Manhole or Cleanout*
WWL B	55 of 76	STA 5+68.82	Cleanout
WWL B	55 of 76	STA 6+41.23	Manhole
WWL B	55 of 76	STA 7+37.08	Cleanout
WWL C	52 of 76	STA 1+22.17	Cleanout
WWL D	54 of 76	STA 1+30.05	Cleanout
WWL E	55 of 76	STA 1+47.14	Cleanout
WWL F	55 of 76	STA 2+53.66	Cleanout
WWL G	52 of 76	STA 5+09.31	Cleanout

SCS – Ascend Westinghouse

SCS Application Attachment A – SCS Engineering Design Report

Texas Commission on Environmental Quality
SEWAGE COLLECTION SYSTEM SUBMITTAL
FINAL ENGINEERING DESIGN REPORT

§217.10 Final Engineering Design Report

(e) The report for a wastewater collection system must include the following;

(1) a map showing the current service area, the proposed service area, and any proposed future expansion areas.
See Construction Plan Sheets 51 to 55.

(2) the topographical features of the current, proposed, and any future service areas.
See Construction Plan Sheet 51 and 55.

(3) a description of how the design flow was determined.
The design flow was calculated by using the standards specified by the City of Georgetown Utility Criteria Manual, which specifies assuming 70 gallons/capita/per day (250 gpd/LUE).

(4) the minimum and maximum grades for each size and type of pipe.
See below.

MIN. SLOPE	MAX. SLOPE	SIZE	TYPE
1.5%	2.75%	6”	SDR26 PVC
0.5%	2.25%	8"	SDR26 PVC

(5) calculations of expected minimum and maximum velocities in the system for each size and type of pipe.
See below
(**Assuming pipes are flowing full with max. slope for max. velocity.)**

MIN. VELOCITY	MAX. VELOCITY	SIZE	TYPE
2.51 fps	4.74 fps	6”	SDR26 PVC
2.16 fps	5.19 fps	8"	SDR26 PVC

(6) the proposed system's effect on an associated existing system's capacity. **The proposed flow from proposed Ascend Westinghouse Development is less than the design capacity provided by the existing 10-inch main (proposed by other engineer, Chapel Hill Apartment SCS, submitted on 07/03/2020), that the project is connecting into.**

(7) the existing and anticipated inflow and infiltration, the hydraulic effect of the inflow and infiltration on the proposed and existing systems, any inflow and infiltration flow rate monitoring, and any inflow and infiltration abatement measures.
Inflow and infiltration is based on historical data used from local design standards listed in the City of Georgetown wastewater design criteria manual at 1,000 gallons per day per acre.

(8) a description of the ability of the existing and proposed trunk and interceptor wastewater collection systems and lift stations to handle the peak flow.
N/A. There are no trunk or interceptor wastewater lines proposed with this project.

(9) the capability of the receiving treatment facility to receive and adequately treat the anticipated peak flow.
The proposed wastewater improvements will tie-in to the San Gabriel Wastewater Treatment Plant, accounted for future development in The Summit at Westinghouse Planned Unit Development (PUD) per City of Georgetown ordinance no. 2018-03. Peak flow for the entire Ascend Westinghouse (Multifamily – 300 units) is anticipated to be 177.6 LUEs, or approximately 44,406 gal/day.

(10) an engineering analysis showing compliance with structural design, minimization of odor-causing conditions, and the pipe design requirements of §217.55 of this title (relating to Manholes and Related Structures).
All wastewater pipe will be laid in straight line segments; manholes to be coated against gases; pipe connections and manhole lids sealed with rubber gaskets to prevent the escape of gases.

(11) a description of the areas not initially served by a project, and the projected means of providing service to these areas, including special provisions incorporated in the present plans for future expansion.
N/A. All multifamily units within the proposed development will be served by this project.

(12) the calculations and curves showing the operating characteristics of all system lift stations at minimum, maximum, and design flows during both present and future conditions.
N/A.

(13) the safety considerations incorporated into a project design, including ventilation, entrances, working areas, and explosion prevention.
Trench safety systems will be used for all trenching depths 5 feet or greater; stepped trenches where necessary; barricades to open trenches/work areas; and safety meetings held by the Contractor will help ensure the safe installation of the wastewater improvements associated with the project. No atypical or non-standard practices or products will be installed with the project. Blasting is not allowed nor proposed for the project.

Temporary Stormwater Section

Texas Commission on Environmental Quality

for Regulated Activities on the Edwards Aquifer Recharge Zone and Relating to 30 TAC §213.5(b)(4)(A), (B), (D)(I) and (G); Effective June 1, 1999

To ensure that the application is administratively complete, confirm that all fields in the form are complete, verify that all requested information is provided, consistently reference the same site and contact person in all forms in the application, and ensure forms are signed by the appropriate party.

Note: Including all the information requested in the form and attachments contributes to more streamlined technical reviews.

Signature

To the best of my knowledge, the responses to this form accurately reflect all information requested concerning the proposed regulated activities and methods to protect the Edwards Aquifer. This **Temporary Stormwater Section** is hereby submitted for TCEQ review and executive director approval. The application was prepared by:

Print Name of Customer/Agent: Brian Grace, P.E.

Date: 8/12/2025

Signature of Customer/Agent:

Regulated Entity Name: Ascend Westinghouse

Project Information

Potential Sources of Contamination

Examples: Fuel storage and use, chemical storage and use, use of asphaltic products, construction vehicles tracking onto public roads, and existing solid waste.

1. Fuels for construction equipment and hazardous substances which will be used during construction:

   ☐ The following fuels and/or hazardous substances will be stored on the site: _____

   These fuels and/or hazardous substances will be stored in:

   ☐ Aboveground storage tanks with a cumulative storage capacity of less than 250 gallons will be stored on the site for less than one (1) year.

- ☐ Aboveground storage tanks with a cumulative storage capacity between 250 gallons and 499 gallons will be stored on the site for less than one (1) year.
- ☐ Aboveground storage tanks with a cumulative storage capacity of 500 gallons or more will be stored on the site. An Aboveground Storage Tank Facility Plan application must be submitted to the appropriate regional office of the TCEQ prior to moving the tanks onto the project.

☑ Fuels and hazardous substances will not be stored on the site.

2. ☑ **Attachment A - Spill Response Actions**. A site specific description of the measures to be taken to contain any spill of hydrocarbons or hazardous substances is attached.

3. ☑ Temporary aboveground storage tank systems of 250 gallons or more cumulative storage capacity must be located a minimum horizontal distance of 150 feet from any domestic, industrial, irrigation, or public water supply well, or other sensitive feature.

4. ☑ **Attachment B - Potential Sources of Contamination**. A description of any activities or processes which may be a potential source of contamination affecting surface water quality is attached.

Sequence of Construction

5. ☑ **Attachment C - Sequence of Major Activities**. A description of the sequence of major activities which will disturb soils for major portions of the site (grubbing, excavation, grading, utilities, and infrastructure installation) is attached.

   - ☑ For each activity described, an estimate (in acres) of the total area of the site to be disturbed by each activity is given.
   - ☑ For each activity described, include a description of appropriate temporary control measures and the general timing (or sequence) during the construction process that the measures will be implemented.

6. ☑ Name the receiving water(s) at or near the site which will be disturbed or which will receive discharges from disturbed areas of the project: Unnamed ephemeral stream

Temporary Best Management Practices (TBMPs)

Erosion control examples: tree protection, interceptor swales, level spreaders, outlet stabilization, blankets or matting, mulch, and sod. Sediment control examples: stabilized construction exit, silt fence, filter dikes, rock berms, buffer strips, sediment traps, and sediment basins. Please refer to the Technical Guidance Manual for guidelines and specifications. All structural BMPs must be shown on the site plan.

7. ☑ **Attachment D – Temporary Best Management Practices and Measures**. TBMPs and measures will prevent pollution of surface water, groundwater, and stormwater. The construction-phase BMPs for erosion and sediment controls have been designed to retain sediment on site to the extent practicable. The following information is attached:

- ☑ A description of how BMPs and measures will prevent pollution of surface water, groundwater or stormwater that originates upgradient from the site and flows across the site.
- ☑ A description of how BMPs and measures will prevent pollution of surface water or groundwater that originates on-site or flows off site, including pollution caused by contaminated stormwater runoff from the site.
- ☑ A description of how BMPs and measures will prevent pollutants from entering surface streams, sensitive features, or the aquifer.
- ☑ A description of how, to the maximum extent practicable, BMPs and measures will maintain flow to naturally-occurring sensitive features identified in either the geologic assessment, TCEQ inspections, or during excavation, blasting, or construction.

8. ☑ The temporary sealing of a naturally-occurring sensitive feature which accepts recharge to the Edwards Aquifer as a temporary pollution abatement measure during active construction should be avoided.

   - ☐ **Attachment E - Request to Temporarily Seal a Feature**. A request to temporarily seal a feature is attached. The request includes justification as to why no reasonable and practicable alternative exists for each feature.
   - ☑ There will be no temporary sealing of naturally-occurring sensitive features on the site.

9. ☑ **Attachment F - Structural Practices**. A description of the structural practices that will be used to divert flows away from exposed soils, to store flows, or to otherwise limit runoff discharge of pollutants from exposed areas of the site is attached. Placement of structural practices in floodplains has been avoided.

10. ☑ **Attachment G - Drainage Area Map**. A drainage area map supporting the following requirements is attached:

    - ☑ For areas that will have more than 10 acres within a common drainage area disturbed at one time, a sediment basin will be provided.
    - ☐ For areas that will have more than 10 acres within a common drainage area disturbed at one time, a smaller sediment basin and/or sediment trap(s) will be used.
    - ☐ For areas that will have more than 10 acres within a common drainage area disturbed at one time, a sediment basin or other equivalent controls are not attainable, but other TBMPs and measures will be used in combination to protect down slope and side slope boundaries of the construction area.
    - ☐ There are no areas greater than 10 acres within a common drainage area that will be disturbed at one time. A smaller sediment basin and/or sediment trap(s) will be used in combination with other erosion and sediment controls within each disturbed drainage area.

☑ There are no areas greater than 10 acres within a common drainage area that will be disturbed at one time. Erosion and sediment controls other than sediment basins or sediment traps within each disturbed drainage area will be used.

11. ☑ **Attachment H - Temporary Sediment Pond(s) Plans and Calculations**. Temporary sediment pond or basin construction plans and design calculations for a proposed temporary BMP or measure have been prepared by or under the direct supervision of a Texas Licensed Professional Engineer. All construction plans and design information must be signed, sealed, and dated by the Texas Licensed Professional Engineer. Construction plans for the proposed temporary BMPs and measures are attached.

☐ N/A

12. ☑ **Attachment I - Inspection and Maintenance for BMPs.** A plan for the inspection of each temporary BMP(s) and measure(s) and for their timely maintenance, repairs, and, if necessary, retrofit is attached. A description of the documentation procedures, recordkeeping practices, and inspection frequency are included in the plan and are specific to the site and/or BMP.

13. ☑ All control measures must be properly selected, installed, and maintained in accordance with the manufacturer's specifications and good engineering practices. If periodic inspections by the applicant or the executive director, or other information indicate a control has been used inappropriately, or incorrectly, the applicant must replace or modify the control for site situations.

14. ☑ If sediment escapes the construction site, off-site accumulations of sediment must be removed at a frequency sufficient to minimize offsite impacts to water quality (e.g., fugitive sediment in street being washed into surface streams or sensitive features by the next rain).

15. ☑ Sediment must be removed from sediment traps or sedimentation ponds not later than when design capacity has been reduced by 50%. A permanent stake will be provided that can indicate when the sediment occupies 50% of the basin volume.

16. ☑ Litter, construction debris, and construction chemicals exposed to stormwater shall be prevented from becoming a pollutant source for stormwater discharges (e.g., screening outfalls, picked up daily).

Soil Stabilization Practices

Examples: establishment of temporary vegetation, establishment of permanent vegetation, mulching, geotextiles, sod stabilization, vegetative buffer strips, protection of trees, or preservation of mature vegetation.

17. ☑ **Attachment J - Schedule of Interim and Permanent Soil Stabilization Practices**. A schedule of the interim and permanent soil stabilization practices for the site is attached.

18. ☑ Records must be kept at the site of the dates when major grading activities occur, the dates when construction activities temporarily or permanently cease on a portion of the site, and the dates when stabilization measures are initiated.

19. ☑ Stabilization practices must be initiated as soon as practicable where construction activities have temporarily or permanently ceased.

Administrative Information

20. ☑ All structural controls will be inspected and maintained according to the submitted and approved operation and maintenance plan for the project.

21. ☑ If any geologic or manmade features, such as caves, faults, sinkholes, etc., are discovered, all regulated activities near the feature will be immediately suspended. The appropriate TCEQ Regional Office shall be immediately notified. Regulated activities must cease and not continue until the TCEQ has reviewed and approved the methods proposed to protect the aquifer from any adverse impacts.

22. ☑ Silt fences, diversion berms, and other temporary erosion and sediment controls will be constructed and maintained as appropriate to prevent pollutants from entering sensitive features discovered during construction.

SCS – Ascend Westinghouse

SCS Temporary Stormwater Section Attachment A – Spill Response Actions

In the event of an accidental leak or spill:

- Contractor shall take action to contain the spill. Contractor may use sand or other absorbent material stockpiled on site to absorb the spilled product. Absorbent material should be spread over the spill area to absorb the spilled product.
- In the event of an uncontained discharge, the contractor shall utilize onsite equipment to construct berms downgradient of the spill with sand or other absorbent material to contain and absorb the spilled product.
- Sand or material used to contain the spill should be collected and stored in such a way so as not to continue to affect additional ground. Once the spill has been contained, collected material should be placed on poly or plastic sheeting until removed from the site. In the event of potential rainfall, the material should be covered with plastic or poly sheeting to prevent contaminating runoff.
- The contractor will be required to notify the owner, and the contractor shall contact TCEQ to notify them in the event of a spill. Additional notifications as required by the type and amount of spill will be conducted by owner or owner's representative.

In the event of a spill:

- The contractor will be required to report significant or hazardous spill in reportable quantities to:
    - The National Response Center at (800) 424-8802
    - The Edwards Aquifer Authority at (210) 222-2204
    - The TCEQ Regional Office at (512) 339-2929 (if during business hours 8 AM to 5 PM) or the State Emergency Response Center at (800) 832-8224 (if after hours)
- Contaminated soils will be sampled for waste characterization. When analysis results are known the contaminated soils will be removed from the site and disposed in a permitted landfill in accordance with applicable regulations.

Additional guidance can be obtained from TCEQ's Technical Guidance Manual (TGM) RG-348 (2005) Section 1.4.16. Contractor shall review this section.

SCS – Ascend Westinghouse

SCS Temporary Stormwater Section
Attachment B – Potential Sources of Contamination

Potential sources of contamination at the site include:

- Construction vehicles tracking mud onto the roadway
- Fueling of construction vehicles and equipment
- Short-term storage and use of fertilizers for use in establishing vegetation
- Placement of asphaltic products on the road
- Possible littering around the construction site
- Portable toilet overflows/spills

All activities will be conducted in a manner to minimize the potential for negative impact upon the environment.

SCS – Ascend Westinghouse

SCS Temporary Stormwater Section
Attachment C – Sequence of Major Activities

1. Temporary erosion and sedimentation controls are to be installed as indicated on the approved subdivision construction plans and in accordance with the stormwater pollution prevention plan (SWPPP) that is required to be posted at the site. Install tree protection and initiate tree mitigation measures.

2. The environmental project manager and/or site supervisor, and/or designated responsible party, and the general contractor will follow the storm water pollution prevention plan (SWPPP) posted at the site. Temporary erosion and sedimentation controls will be revised, if needed, to comply with city inspector's directives, and revised construction schedule relative to the water quality plan requirements and the erosion and sedimentation control plan.

3. Temporary erosion and sedimentation controls will be inspected and maintained in accordance with the storm water pollution prevention plan (SWPPP) posted at the site.

4. A sequence of major construction activities, as well as an estimated area of disturbance for each, is listed below:
    a. Clearing and grubbing – 14.4 acres
    b. Grading and excavation for roadway and lots – 10 acres
    c. Excavation for utilities and storm sewer system – 1.3 acre
    d. Construction of utilities and storm sewer system – 1.3 acre
    e. Paving, striping, etc – 4.3 acre
    f. Revegetation – 5 acres
    g. Landscaping – 5 acres

5. Upon completion of construction and revegetation, the design engineer shall submit an engineer's letter of concurrence to the City of Georgetown indicating that construction, including revegetation, is complete and in substantial conformity with the approved plans. After receiving this letter, a final inspection will be scheduled by the appropriate city inspector.

6. After construction is complete and all disturbed area has been revegetated per plan to at least 90 percent established, remove the temporary erosion and sedimentation controls and complete any necessary final revegetation resulting from removal of the controls. Conduct any maintenance and rehabilitation of the permanent BMPs.

SCS – Ascend Westinghouse

SCS Temporary Stormwater Section
Attachment D – Temporary Best Management Practices

Temporary Erosion and Sediment Control Best Management Practices (BMPs) shall be designed and placed in accordance with the City of Georgetown and TCEQ requirements. The temporary BMPs shall be installed prior to any site preparation work (clearing, grubbing, or excavation).

- Stabilized Construction Entrance
    - A stabilized construction entrance is a stabilized pad of crushed stone located at any point traffic will be entering of leaving the construction site from a public right-of-way, street, alley, sidewalk or parking area. The purpose of a stabilized construction entrance is to reduce or eliminate the flowing of sediment onto public rights-of-way. See the City of Georgetown standard in the construction plans for details on construction and installation.
- Silt Fence
    - Silt fence consists of geotextile fabric supported by metal posts. When silt fencing is placed within the ditch channels, they intercept runoff, reduce its flow velocity, and provide removal of sediment while allowing the water to percolate through. See the City of Georgetown standard in the construction plans for details on construction and installation.
- Rock Filter Dam
    - Rock filter dams serve as a check dam in areas of concentrated flow. Rock filter dams intercept sediment-laden runoff, detain the sediment and release the water in sheet flow. The rock filter dams will be used for channel flows. See the TxDOT standard in the construction plans for details on construction and installation.
- Concrete Washout Areas
    - Concrete washout areas prevent or reduce the discharge of pollutants of storm water from concrete waste by performing onsite washout in a designated washout tub. See the construction plans for details on construction and installation.
- Dust Control
    - Dust control can prevent blowing and movement of dust from exposed soil surfaces, reduce on-site and off-site damage, health hazards and improve traffic safety. Dust control will be implemented at the site during all phases of construction.
- Disturbed Area Minimization
    - An effective way of minimizing potential impact from storm water runoff from construction sites is to minimize the area of soil disturbance. The site will be developed in such a manner as to limit the necessary construction to as small an area as practical, thereby reducing the amount of sediment run-off generated by a storm event.
- High Service Rock Berms
    - A high service rock berm should be designated in areas of important environmental significance. This type of sediment barrier combines the characteristics of a silt fence and a rock berm to provide a substantial level of sediment reduction and a sturdy enough barrier to withstand higher flows. See the City of Georgetown standard in the construction plans for details on construction and installation.

In most areas in this project site, runoff will be conveyed via temporary diversion swale, located at the downstream of the drainage basin, to the temporary sedimentation basin excepts for offsite runoff onto the project site. Offsite runoff will be bypassed via proposed stormwater pipe and daylighted. The flow patterns in these areas will remain as they currently exist. No improvements are proposed in these areas which would allow these flows to bypass the proposed improvements.

The temporary BMPs have been placed in locations to follow TCEQ guidelines for size of drainage area contributing to a specific temporary BMP. These BMPs include Temporary Sediment Control Fence, Rock Berms, Sediment Trap Curb Inlets, Stabilized Construction Entrances, and Concrete Washout Areas. Each of these BMPs has been designed to capture the sediment before it enters the system.

Site preparation, which is the initiation of all activity on the project, will disturb the largest amount of soil. Therefore, before any of the work can begin within a phase, the clearing and grading contractor will be responsible for the installation of all on-site control measures within that phase. The methodology for pollution prevention of on-site stormwater will include: (1) erection of silt fences along the downgradient boundary of construction activities for temporary erosion and sedimentation controls, (2) installation of rock berms downgradient from the areas of concentrated stormwater flow for temporary erosion control,
(3) installation of stabilized construction entrance/exit(s), as necessary to reduce the dispersion of sediment from the site, and (4) installation of inlet protection, as necessary.

Prior to the initiation of construction, all previously installed control measure will be repaired or re-established for their designed or intended purpose. This work, which is the remainder of all activity on the project, may also disturb additional soil. The construction contractor will be responsible for the installation of all remaining on-site control measures that includes installation of the concrete truck washout tub(s), as construction phasing warrants.

Temporary measures are intended to provide a method of slowing the flow of runoff from the construction site in order to allow sediment and suspended solids to settle out of the runoff. By containing the sediment and solids within the site, they will not enter the aquifer.

BMP measures utilized in this plan are intended to allow stormwater to continue downstream after passing through the BMPs. This will allow stormwater runoff to continue downgradient to features that may exist downstream of the BMP.

SCS – Ascend Westinghouse

SCS Temporary Stormwater Section
Attachment F – Structural Practices

The following structural measures will be installed prior to the initiation of site preparation activities:

- Erection of silt fences along the downgradient limits of construction with rock berms for secondary protection where necessary.
- Installation of stabilized construction entrance(s)/exit(s) as necessary

The following structural measures will be installed at the initiation of construction activities or as appropriate based on construction sequencing:

- Installation of concrete truck washout tub(s) as required
- Installation of inlet protection, as necessary
- Designation of construction staging area

SCS – Ascend Westinghouse

SCS Temporary Stormwater Section
Attachment G – Drainage Area Map

See sheets 65 and 66 of the construction plans set for the existing and proposed hydrology plan sheets, respectively. See sheets See sheet 64 for inlet and drainage maps.

SCS – Ascend Westinghouse

SCS Temporary Stormwater Section
Attachment H - Temporary Sediment Pond Plans and Calculations

See sheets 34 and 36 of the construction plans set for the temporary sediment pond plans and calculations sheets.

SCS – Ascend Westinghouse

SCS Temporary Stormwater Section
Attachment I – Inspection and Maintenance of BMPs

The following is a schedule for inspection and maintenance for Temporary BMPs:

- Silt Fence
  - Inspect weekly and after every rain event
- Stabilized Construction Entrance
  - Inspect weekly and after every rain event
- Rock Filter Dam
  - Inspect weekly and after every rain event
- Filter Logs (Erosion Control Logs)
  - Inspect weekly and after every rain event
- Inlet Protection
  - Inspect weekly and after every rain event
- Concrete Washout Area
  - Inspect weekly and after every rain event
- Construction Staging Area
  - Inspect weekly and after every rain event

All inspection and maintenance activities should be recorded. An inspection and maintenance checklist, at a minimum, should include the following:

- Date of inspection
- Condition of each BMP element
- Any maintenance work that was performed (as well as who performed the work)
- Any issues noted for future maintenance (sediment accumulating, vegetation needing pruning or replacement, etc.)

Inspection and maintenance records should be kept in a log in a known set location. Any deficient BMP elements noted in the inspection should be corrected, repaired, or replaced immediately. These deficiencies can affect the integrity of structures, safety of the public, and the removal efficiency of the BMPs.

SCS – Ascend Westinghouse

SCS Temporary Stormwater Section
Attachment J – Schedule of Interim and Permanent Soil Stabilization Practices

The following is a schedule of interim and permanent soil stabilization practices:

- Prior to site disturbance
  - Install all temporary erosion and sedimentation control features
- During construction
  - Maintain all temporary erosion and sedimentation control structures, inspect all temporary erosion and sedimentation control structures on a weekly and/or daily basis and after all rain events.
- After completion of construction
  - Install all permanent erosion and sedimentation controls
- After completion of permanent controls
  - Remove all temporary erosion and sedimentation control features

Interim on-site stabilization measures, which are continuous, will include minimizing soil disturbance by exposing the smallest practical area of land required for the shortest period of time and maximizing use of natural vegetation. As soon as is practical, all disturbed soil will be stabilized as per project specifications in accordance with TCEQ's Technical Guidance Manual (TGM). Mulching, netting, erosion blankets, and seeding are acceptable.

Stabilization measures will be limited as soon as is practical in portions of the site where construction activities have temporarily or permanently ceased, and except as provided below, will be initiated no more than fourteen (14) days after the construction activity in that portion of the site has temporarily or permanently ceased. Where construction activity on a portion of the site is temporarily ceased, and earth disturbing activities will be resumed within twenty-one (21) days, temporary stabilization measure do not have to be initiated on that portion of the site. In areas experiencing droughts where the initiation of stabilization measures by the 14th day after construction activity has temporarily or permanently ceased is precluded by seasonably arid conditions, stabilization measures must be initiated as soon as possible.

Agent Authorization Form
For Required Signature
Edwards Aquifer Protection Program
Relating to 30 TAC Chapter 213
Effective June 1, 1999

I Todd Jones,
Print Name

Development Manager,
Title - Owner/President/Other

of DHIC - Westinghouse, LLC,
Corporation/Partnership/Entity Name

have authorized Brian Grace, P.E.
Print Name of Agent/Engineer

of BGE Inc.
Print Name of Firm

to represent and act on the behalf of the above named Corporation, Partnership, or Entity for the purpose of preparing and submitting this plan application to the Texas Commission on Environmental Quality (TCEQ) for the review and approval consideration of regulated activities.

I also understand that:

1. The applicant is responsible for compliance with 30 Texas Administrative Code Chapter 213 and any condition of the TCEQ's approval letter. The TCEQ is authorized to assess administrative penalties of up to $10,000 per day per violation.

2. For those submitting an application who are not the property owner, but who have the right to control and possess the property, additional authorization is required from the owner.

3. Application fees are due and payable at the time the application is submitted. The application fee must be sent to the TCEQ cashier or to the appropriate regional office. The application will not be considered until the correct fee is received by the commission.

4. A notarized copy of the Agent Authorization Form must be provided for the person preparing the application, and this form must accompany the completed application.

5. No person shall commence any regulated activity on the Edwards Aquifer Recharge Zone, Contributing Zone or Transition Zone until the appropriate application for the activity has been filed with and approved by the Executive Director.

SIGNATURE PAGE:

Applicant's Signature

8/11/20
Date

THE STATE OF Texas §
County of Tarrant §

BEFORE ME, the undersigned authority, on this day personally appeared Brian Todd Jones known to me to be the person whose name is subscribed to the foregoing instrument, and acknowledged to me that (s)he executed same for the purpose and consideration therein expressed.

GIVEN under my hand and seal of office on this 11 day of August 2020

NOTARY PUBLIC

Karie N Mayben
Typed or Printed Name of Notary

NOTARY PUBLIC STATE OF TEXAS
Karie N Mayben
My Commission Expires
03/28/2024
ID No. 10480712

MY COMMISSION EXPIRES: 03 · 28 · 2024

Application Fee Form

Texas Commission on Environmental Quality
Name of Proposed Regulated Entity: Ascend Westinghouse
Regulated Entity Location: Georgetown, Williamson County, TX, 78626
Name of Customer: DHIC - Westinghouse, LLC
Contact Person: Brian Grace, P.E. Phone: 512-879-0418
Customer Reference Number (if issued):CN 605816347
Regulated Entity Reference Number (if issued):RN 111106589

Austin Regional Office (3373)

☐ Hays ☐ Travis ☑ Williamson

San Antonio Regional Office (3362)

☐ Bexar ☐ Medina ☐ Uvalde
☐ Comal ☐ Kinney

Application fees must be paid by check, certified check, or money order, payable to the **Texas Commission on Environmental Quality**. Your canceled check will serve as your receipt. **This form must be submitted with your fee payment**. This payment is being submitted to:

☑ Austin Regional Office
☐ Mailed to: TCEQ - Cashier
Revenues Section
Mail Code 214
P.O. Box 13088
Austin, TX 78711-3088

☐ San Antonio Regional Office
☐ Overnight Delivery to: TCEQ - Cashier
12100 Park 35 Circle
Building A, 3rd Floor
Austin, TX 78753
(512)239-0357

Site Location (Check All That Apply):

☑ Recharge Zone ☐ Contributing Zone ☐ Transition Zone

Type of Plan	*Size*	*Fee Due*
Water Pollution Abatement Plan, Contributing Zone Plan: One Single Family Residential Dwelling	Acres	$
Water Pollution Abatement Plan, Contributing Zone Plan: Multiple Single Family Residential and Parks	Acres	$
Water Pollution Abatement Plan, Contributing Zone Plan: Non-residential	Acres	$
Sewage Collection System	1,921 L.F.	$ $960.50
Lift Stations without sewer lines	Acres	$
Underground or Aboveground Storage Tank Facility	Tanks	$
Piping System(s)(only)	Each	$
Exception	Each	$
Extension of Time	Each	$

Signature: _____ Date: 9/29/2020

TCEQ-0574 (Rev. 02-24-15)

Application Fee Schedule

Texas Commission on Environmental Quality

Edwards Aquifer Protection Program 30 TAC Chapter 213 (effective 05/01/2008)

Water Pollution Abatement Plans and Modifications

Contributing Zone Plans and Modifications

Project	*Project Area in Acres*	*Fee*
One Single Family Residential Dwelling	< 5	$650
Multiple Single Family Residential and Parks	< 5 5 < 10 10 < 40 40 < 100 100 < 500 ≥ 500	$1,500 $3,000 $4,000 $6,500 $8,000 $10,000
Non-residential (Commercial, industrial, institutional, multi-family residential, schools, and other sites where regulated activities will occur)	< 1 1 < 5 5 < 10 10 < 40 40 < 100 ≥ 100	$3,000 $4,000 $5,000 $6,500 $8,000 $10,000

Organized Sewage Collection Systems and Modifications

Project	*Cost per Linear Foot*	*Minimum Fee-Maximum Fee*
Sewage Collection Systems	$0.50	$650 - $6,500

Underground and Aboveground Storage Tank System Facility Plans and Modifications

Project	*Cost per Tank or Piping System*	*Minimum Fee-Maximum Fee*
Underground and Aboveground Storage Tank Facility	$650	$650 - $6,500

Exception Requests

Project	*Fee*
Exception Request	$500

Extension of Time Requests

Project	*Fee*
Extension of Time Request	$150

TCEQ Use Only

TCEQ Core Data Form

For detailed instructions regarding completion of this form, please read the Core Data Form Instructions or call 512-239-5175.

SECTION I: General Information

1. Reason for Submission (*If other is checked please describe in space provided.*)

☒ New Permit, Registration or Authorization (*Core Data Form should be submitted with the program application.*)

☐ Renewal (*Core Data Form should be submitted with the renewal form*) ☐ Other

2. Customer Reference Number *(if issued)*	Follow this link to search for CN or RN numbers in Central Registry**	3. Regulated Entity Reference Number *(if issued)*
CN 605816347		RN 111106589

SECTION II: Customer Information

4. General Customer Information | **5. Effective Date for Customer Information Updates** (mm/dd/yyyy)

☒ New Customer ☐ Update to Customer Information ☐ Change in Regulated Entity Ownership
☐ Change in Legal Name (Verifiable with the Texas Secretary of State or Texas Comptroller of Public Accounts)

The Customer Name submitted here may be updated automatically based on what is current and active with the Texas Secretary of State (SOS) or Texas Comptroller of Public Accounts (CPA).

6. Customer Legal Name (*If an individual, print last name first: eg: Doe, John*) *If new Customer, enter previous Customer below:*

DHIC - Westinghouse, LLC

7. TX SOS/CPA Filing Number	8. TX State Tax ID (11 digits)	9. Federal Tax ID (9 digits)	10. DUNS Number (*if applicable*)
803747375		85-2875611	

11. Type of Customer: ☐ Corporation ☐ Individual Partnership: ☐ General ☐ Limited

Government: ☐ City ☐ County ☐ Federal ☐ State ☐ Other ☐ Sole Proprietorship ☒ Other: Limited Liability Company

12. Number of Employees
☒ 0-20 ☐ 21-100 ☐ 101-250 ☐ 251-500 ☐ 501 and higher

13. Independently Owned and Operated?
☒ **Yes** ☐ **No**

14. Customer Role (Proposed or Actual) – *as it relates to the Regulated Entity listed on this form. Please check one of the following*

☐ Owner ☐ Operator ☒ Owner & Operator
☐ Occupational Licensee ☐ Responsible Party ☐ Voluntary Cleanup Applicant ☐ Other:

15. Mailing Address:							
	1341 Horton Circle						
	City	Arlington	State	TX	ZIP	76011	ZIP + 4

16. Country Mailing Information (*if outside USA*)	17. E-Mail Address (*if applicable*)

18. Telephone Number	19. Extension or Code	20. Fax Number (*if applicable*)
(817) 390-8200		( ) -

SECTION III: Regulated Entity Information

21. General Regulated Entity Information (*If 'New Regulated Entity" is selected below this form should be accompanied by a permit application*)

☒ New Regulated Entity ☐ Update to Regulated Entity Name ☐ Update to Regulated Entity Information

The Regulated Entity Name submitted may be updated in order to meet TCEQ Agency Data Standards (removal of organizational endings such as Inc, LP, or LLC).

22. Regulated Entity Name (*Enter name of the site where the regulated action is taking place.*)

Ascend Westinghouse

23. Street Address of the Regulated Entity: *(No PO Boxes)*	1341 Horton Circle							
	City	Arlington	**State**	TX	**ZIP**	76011	**ZIP + 4**	
24. County	Tarrant County							

Enter Physical Location Description if no street address is provided.

25. Description to Physical Location:	South of Westinghouse Road (also known as County Road 111), approximately 1,700 feet east of Interstate Highway 35 and approximately 1,500 feet west of Mays Street.

26. Nearest City	**State**	**Nearest ZIP Code**
Georgetown	TX	78626

27. Latitude (N) In Decimal:	30.579129		**28. Longitude (W) In Decimal:**	-97.684152	
Degrees	Minutes	Seconds	Degrees	Minutes	Seconds
30	34	44.3	97	41	03.0

29. Primary SIC Code (4 digits)	**30. Secondary SIC Code** (4 digits)	**31. Primary NAICS Code** (5 or 6 digits)	**32. Secondary NAICS Code** (5 or 6 digits)
1521		236115	

33. What is the Primary Business of this entity? *(Do not repeat the SIC or NAICS description.)*

Multifamily apartment

34. Mailing Address:	1341 Horton Circle							
	City	Arlington	**State**	TX	**ZIP**	76011	**ZIP + 4**	

35. E-Mail Address:	BTJones1@drhorton.com

36. Telephone Number	**37. Extension or Code**	**38. Fax Number** *(if applicable)*
(817)390-8200		( ) -

39. TCEQ Programs and ID Numbers Check all Programs and write in the permits/registration numbers that will be affected by the updates submitted on this form. See the Core Data Form instructions for additional guidance.

☐ Dam Safety	☐ Districts	☐ Edwards Aquifer	☐ Emissions Inventory Air	☐ Industrial Hazardous Waste
☐ Municipal Solid Waste	☐ New Source Review Air	☐ OSSF	☐ Petroleum Storage Tank	☐ PWS
☐ Sludge	☐ Storm Water	☐ Title V Air	☐ Tires	☐ Used Oil
☐ Voluntary Cleanup	☐ Waste Water	☐ Wastewater Agriculture	☐ Water Rights	☐ Other:

SECTION IV: Preparer Information

40. Name:	Brian Grace, P.E.	**41. Title:**	Associate Senior Project Manager

42. Telephone Number	**43. Ext./Code**	**44. Fax Number**	**45. E-Mail Address**
(512) 879-0418		( ) -	BGrace@bgeinc.com

SECTION V: Authorized Signature

46. By my signature below, I certify, to the best of my knowledge, that the information provided in this form is true and complete, and that I have signature authority to submit this form on behalf of the entity specified in Section II, Field 6 and/or as required for the updates to the ID numbers identified in field 39.

Company:	BGE Inc	**Job Title:**	Associate Senior Project Manager
Name *(In Print):*	Brian Grace, P.E.	**Phone:**	(512) 879- **0418**
Signature:		**Date:**	8/12/2020

Owner Authorization Form

for Required Signature for submitting and signing an application for an Edwards Aquifer Protection Plan (Plan) and conducting regulated activities in accordance with an approved Plan.

Texas Commission on Environmental Quality
Edwards Aquifer Protection Program
Relating to the Edwards Aquifer Rules of
Title 30 of the Texas Administrative Code
(30 TAC), Chapter 213
Effective June 1, 1999

Land Owner Authorization

I, Jeff Novak of Novak Westinghouse LP

Land Owner Name (Individual) — Firm (applicable to Legal Entities)

am the Owner of Record or Title Holder of the property located at:

AW0385 AW0385 - Low, B.c. Sur., ACRES 43.9

(Legal description of the property referenced in the application)

and being duly authorized under 30 TAC § 213.4(c)(2) and § 213.4(d)(1) or § 213.23(c)(2) and § 213.23(d) to submit and sign an application for a Plan, do hereby authorize:

Todd Jones / DHIC - Westinghouse, LLC

(Applicant Name / Plan Holder (Legal Entity or Individual))

to conduct:

Ascend Westinghouse

(Description of the proposed regulated activities)

on the property described above or at:

500 Westinghouse Rd, Georgetown, TX 78626

(If applicable to a precise location for the authorized regulated activities)

Land Owner Acknowledgement

I, Jeff Novak of Novak Westinghouse LP

Land Owner Name (Individual) — Firm (applicable to Legal Entities)

understand that while Todd Jones / DHIC - Westinghouse, LLC

Applicant Name / Plan Holder (Legal Entity or Individual)

is responsible for compliance with the approved or conditionally approved Plan and any special conditions of the approved Plan through all phases of Plan implementation,

I, Jeff Novak of Novak Westinghouse LP

Land Owner Name (Individual) Firm (applicable to Legal Entities)

as Owner of Record or Title Holder of the property described above, I am ultimately responsible for ensuring that compliance with the approved or conditionally approved Plan and any special conditions of the approved Plan, through all phases of Plan implementation, is achieved even if the responsibility for compliance and the right to possess and control of the property referenced in the application has been contractually assumed by another legal entity.

I, Jeff Novak of Novak Westinghouse LP

Land Owner Name (Individual) Firm (applicable to Legal Entities)

further understand that any failure to comply with any condition of the Executive Director's approval is a violation and is subject to administrative rule or orders and penalties as provided under 30 TAC § 213.10 (relating to Enforcement). Such violation may also be subject to civil penalties and injunction.

Land Owner Signature

Land Owner Signature

Date: Sept 7 2020

THE STATE OF § Texas

County of § Williamson

BEFORE ME, the undersigned authority, on this day personally appeared known to me to be the person whose name is subscribed to the foregoing instrument and acknowledged to me that (s)he executed same for the purpose and consideration therein expressed.

GIVEN under my hand and seal of office on this 8th day of September

Shelby Stamper

NOTARY PUBLIC

SHELBY CHANDLER STAMPER
Notary Public, State of Texas
Comm. Expires 08-19-2024
Notary ID 132632828

Shelby Stamper

Typed or Printed Name of Notary

MY COMMISSION EXPIRES: 8/19/24

Attached: (Mark all that apply)

- ☐ Lease Agreement
- ☐ Signed Contract
- ☒ Deed Recorded Easement
- ☐ Other legally binding document

Applicant Acknowledgement

I, Todd Jones of DHIC - Westinghouse, LLC

Applicant Name (Individual) — Firm (applicable to Legal Entities)

acknowledge that Jeff Novak

Land Owner Name (Legal Entity or Individual)

has provided Todd Jones

Applicant Name (Legal Entity or Individual)

with the right to possess and control the property referenced in the Edwards Aquifer Protection Plan (Plan).

I understand that Todd Jones

Applicant Name (Legal Entity or Individual)

is responsible, contractually or not, for compliance with the approved or conditionally approved Plan and any special conditions of the approved Plan through all phases of Plan implementation. I further understand that failure to comply with any condition of the Executive Director's approval is a violation and is subject to administrative rule or orders and penalties as provided under § 213.10 (relating to Enforcement). Such violation may also be subject to civil penalties and injunction.

Applicant Signature

Applicant Signature — Date 9/15/20

THE STATE OF § Texas

County of § Tarrant

BEFORE ME, the undersigned authority, on this day personally appeared known to me to be the person whose name is subscribed to the foregoing instrument and acknowledged to me that (s)he executed same for the purpose and consideration therein expressed.

GIVEN under my hand and seal of office on this 15 day of Sept. 2020

NOTARY PUBLIC STATE OF TEXAS
Karie N Mayben
My Commission Expires
03/28/2024
ID No. 10480712

NOTARY PUBLIC

Karie N. Mayben

Typed or Printed Name of Notary

MY COMMISSION EXPIRES: 03.28.2024

ELECTRONICALLY RECORDED 2019051590
Williamson County, Texas Total Pages: 13

DEED OF TRUST

RECORDATION REQUESTED BY:
Vista Bank
50th Street Office
4621 50th Street
Lubbock, TX 79414

WHEN RECORDED MAIL TO:
Vista Bank
50th Street Office
4621 50th Street
Lubbock, TX 79414

SEND TAX NOTICES TO:
Vista Bank
50th Street Office
4621 50th Street
Lubbock, TX 79414

SPACE ABOVE THIS LINE IS FOR RECORDER'S USE ONLY

Vista Bank

03 438173-MDKH

000000000000077480034006062019

THIS DEED OF TRUST is dated June 6, 2019, among Novak Westinghouse, LP, whose address is 204 Adams Street, Georgetown, TX 78628 ("Grantor"); Vista Bank, whose address is 50th Street Office, 4621 50th Street, Lubbock, TX 79414 (referred to below sometimes as "Beneficiary"); and Troy Stegemoeller, whose address is 1508 Texas Ave, Lubbock, TX 79401 (referred to below as "Trustee").

CONVEYANCE AND GRANT. For valuable consideration, Grantor conveys to Trustee in trust, with power of sale, for the benefit of Lender as Beneficiary, the following described real property, together with all existing or subsequently erected or affixed buildings, improvements and fixtures; and all easements, rights of way, and appurtenances; all water and water rights; and all other rights, royalties, and profits relating to the real property, including without limitation such rights as Grantor may have in all minerals, oil, gas, geothermal and similar matters, (the "Real Property") located in Williamson County, State of Texas:

A tract or parcel of land, 76.27165 acres more or less, being out of and a part of the Barney C. Low Survey, Abstract 385 in Williamson County, Texas, said 76.27165 acres being more particularly described by metes and bounds attached hereto and made a part hereof (Exhibit 'A") SAVE & EXCEPT 0.903 acres being more particularly described by metes and bounds attached hereto and made a part hereof (Exhibit 'B'); and further SAVE & EXCEPT 0.014 acres being more particularly described by metes and bounds attached hereto and made a part hereof (Exhibit 'C'); and further SAVE & EXCEPT 3.463 acres being more particularly described by metes and bounds attached hereto and made a part hereof (Exhibit 'D').

EXHIBIT "A"

BEING 76.27165 ACRES OUT OF THE BARNEY C. LOW SURVEY, ABSTRACT NO. A-385 SITUATED IN WILLIAMSON COUNTY, TEXAS, BEING ALL OF THE CALLED 74.79 ACRE TRACT OF LAND DESCRIBED IN A DEED TO RAY ISAACKS AS RECORDED IN VOLUME 633, PAGE 235, OF THE OFFICIAL PUBLIC RECORDS OF WILLIAMSON COUNTY, TEXAS, WHICH INCLUDES THE CALLED 4.657 ACRE TRACT OF LAND DESCRIBED IN A DEED TO CHARLES TERRY ISAACKS AND WIFE GAY LYNN ISAACKS AS RECORDED IN VOLUME 758, PAGE 564, OF THE OFFICIAL PUBLIC RECORDS OF WILLIAMSON COUNTY, TEXAS, SAVE AND EXCEPT A CALLED 3.002 ACRE TRACT OF LAND DESCRIBED IN A DEED TO DAVID HAMBY AS RECORDED IN DOC. 2005039945 OF THE OFFICIAL PUBLIC RECORDS OF WILLIAMSON COUNTY, TEXAS, SAME BEING THE CALLED 3.00 ACRE TRACT OF LAND DESCRIBED IN A DEED TO H.R. MOYE AS RECORDED IN VOLUME 630, PAGE 887, OF THE OFFICIAL PUBLIC RECORDS OF WILLIAMSON COUNTY, TEXAS AND ALSO INCLUDED IN THE 76.27165 ACRES IS A CALLED 5.00 ACRE TRACT OF LAND DESCRIBED IN A DEED TO RAY ISAACKS AS RECORDED IN VOLUME 465, PAGE 538, OF THE OFFICIAL PUBLIC RECORDS OF WILLIAMSON COUNTY, TEXAS AND BEING MORE PARTICULARLY DESCRIBED BY METES AND BOUNDS AS FOLLOWS.

BEGINNING, at an iron rod found in the southerly right-of-way line of County Road Number 111, for the most northeasterly corner of said 74.79 acre tract;

THENCE, S 20°10'24" E, leaving said right-of-way for a distance of 2764.53 feet to an iron rod found for the southeast corner of herein described tract;

THENCE, S 68°58'28" W, a distance of 1237.41 feet to an iron rod found at the southwest corner;

THENCE, N 21°06'56" W, a distance of 777.23 feet to an iron rod found for corner;

THENCE, N 19°30'47" W, a distance of 16.60 feet to an angle point;

THENCE N 20°34'45" W, a distance of 1964.99 feet to a corner in the southerly right-of-way line of County Road Number 111;

THENCE, N 68°51'17" E, with the southerly right-of-way line of County Road 111, a distance of 30.00 feet to an iron rod found for the northwest corner of a called 3.002 acre tract described in a deed to David Hamby as recorded in Doc. 2005039945 of the Official Public Records of Williamson County, Texas;

THENCE, S 20°20'22" E, departing the southerly right-of-way line of County Road 111 for a distance of 361.29 feet to an iron rod found for southwest corner of said Hamby tract;

THENCE, N 68°51'21" E, a distance of 362.53 feet to an iron rod found for southeast corner of said Hamby tract;

THENCE, N 20°29'43" W, a distance of 340.42 feet to an iron rod found;

THENCE, N 20°31'47" W, a distance of 20.86 feet to an iron rod found in the southerly right-of-way line of County Road 111 and being the northeast corner of said Hamby tract;

THENCE, N 68°40'07" E with the southerly right-of-way line of County Road 111, for a distance of 872.48 feet to the POINT OF BEGINNING AND CONTAINING 3,322,393 square feet or 76.27165 acres of land

EXHIBIT "B"

FOR A 0.903 ACRE TRACT OF LAND SITUATED IN THE BARNEY LOW SURVEY, ABSTRACT NO. 385 IN WILLIAMSON COUNTY, TEXAS, BEING A PORTION OF A CALLED 74.79 ACRE TRACT DESCRIBED IN DEED TO CHARLES TERRY ISAACKS OF RECORD IN VOLUME 1658 PAGE 629 OF THE OFFICIAL RECORDS OF WILLIAMSON COUNTY TEXAS SAID 0.903-ACRE TRACT AS SHOWN ON THE ACCOMPANYING SURVEY PLAT IS MORE PARTICULARLY DESCRIBED BY METES AND BOUNDS AS FOLLOWS:

BEGINNING at a 1/2" iron rod found on a point in the south margin of County Road No. 111 (Westinghouse Road) as fenced and used by the public, said point being the northeast corner of a called 3.002 acre tract of land described in deed to David W Hamby and Teri Hamby of record in Document No. 2005039945 of the Official Public Records of Williamson County, Texas, same being a northwest corner of said 74.79-acre tract for the northeast corner and POINT OF BEGINNING hereof;

THENCE with the south margin line of said County Road 111: same being the north boundary line of said 74.79 acre tract, N 68°40'14" E for a distance of 872.08 feet to a 1/2" iron rod with a plastic cap stamped "Baker-Aicklen" set on a point being a northeast corner of said 74.79 acre tract, same being the northwest corner of a called 40-acre tract of land described in deed to Darrell S. David, Trustee of record in Volume 1056 Page 173 of the Official Records of Williamson County Texas, for the northeast corner hereof;

THENCE departing the south margin line of said County Road 111 with a west boundary line of said 40- acre tract, same being the east boundary line of said 74.79-acre tract, S 21°16'05" E
for a distance of 66.21 feet to a 1/2" iron rod with plastic cap stamped "Baker-Aicklen" set for the southeast corner hereof from which a 1/2" iron rod found on a point being the southwest
corner of said 40 acre tract bears, S 21°16'05" E a distance of 230.59 feet;

THENCE departing the west boundary line of said 40-acre tract through the interior of said 74.79-acre tract the following four (4) courses and distances:

1. With the arc of a curve to the right having a radius of 5060.00 feet, a delta angle of 01°13'17", an arc length of 107.87 feet and a chord which bears S 70°50'50" W for a distance of 107.87 feet to a 1/2" iron rod with plastic cap stamped "Baker-Aicklen" set for a point of tangency hereof;

2. S 71°27'29" W for a distance of 499.97 feet to a 1/2" iron rod with plastic cap stamped "'Baker-Aicklen" set for an angle point hereof,

3. S 73°34'55" W for a distance of 27.86 feet to a 1/2" iron rod with plastic cap stamped "Baker-Aicklen" set for a point of curvature hereof,

4. With the arc of a curve to tbe left having a radius of 5000.00 feet, a delta angle of 02°'43'33" an arc length of 237.87 feet and a chord which bears 72°13'09" W for a distance of 237.85 feet to a 1/2" iron rod with plastic cap stamped "Baker-Aicklen" set on a point in the east boundary line of said 74.79-acre tract, same being the west boundary line of said 3.002-acre tract for the southwest corner hereof, from which a 1/2" iron rod found on a point being the southeast corner of said 3.002-acre tract bears, S 20°29'06" E a distance of 340.48 feet;

THENCE with the east boundary line of said 74.79-acre tract, same being the west boundary line of said 3.002-acre tract, N 20°29'06" W for a distance of 20.69 feet to the POINT OF BEGINNING hereof, containing 0.903 acres of land.

EXHIBIT "C"

FOR A 0.014 ACRE TRACT OF LAND SITUATED IN THE BARNEY LOW SURVEY, ABSTRACT NO. 385 AND THE EPHFAIM EVANS SURVEY, ABSTRACT NO. 212 IN WILLIAMSON COUNTY, TEXAS, BEING A PORTION OF A CALLED 74.79 ACRE TRACT DESCRIBED IN DEED TO CHARLES TERRY ISAACKS OF RECORD IN VOLUME 1658, PAGE 629 OF THE OFFICIAL RECORDS OF WILLIAMSON COUNTY, TEXAS, SAID 0.014-ACRE TRACT AS SHOWN ON THE ACCOMPANYING SURVEY PLAT IS MORE PARTICULARLY DESCRIBED BY METES AND BOUNDS AS FOLLOWS:

BEGINNING at a 1/2" iron rod found on a point in the south right-of-way line of County Road No. 111 (Westinghouse Road), said point being the northwest corner of a called 3.002 acre tract of land described in deed to David W. Hamby and Teri Hamby of record in Document No. 2005039945 of the Official Public Records of Williamson County, Texas, same being a northeast corner of said 74.79 acre tract for the northeast corner and POINT OF BEGINNING hereof;

THENCE departing the right-of-way of said Coutny Road 111 with the west boundary line of said 3.002 acre tract, same being an east boundary line of said 74.79 acre tract, S 20°21'19" E for a distance of 19.53 feet to a 1/2" iron rod with plastic cap stamped "Baker-Aicklen" set for the southeast corner hereof:

THENCE departing the west boundary line of said 3.002 acre tract through the interior of said 74.79 acre tract, with the arc of a curve to the left having a radius of 4955.00 feet, a delta angle of 00°21'14", an arc length of 30.62 feet and a chord which bears S 67°15'54" W for a distance of 30.62 feet to a 1/2" iron rod with plastic cap stamped "Baker-Aicklen" set on a point in the south right-of-way line of said County Road 111, same being the west boundary line of said 74.79 acre tract for the southwest corner thereof;

THENCE with the south right-of-way line of said County Road 111, same being the west boundary line of said 74.79 acre tract, N 20°52'37" W for a distance of 20.39 feet to the northwest corner hereof;

THENCE with the south right-of-way line of said County Road 111, same being the north boundary line of said 74.79 acre tract, N 68°52'37" E for a distance of 30.64 feet to the POINT OF BEGINNING hereof and containing 0.014 acres of land, more or less.

EXHIBIT "D"

BEING A 3.463 ACRE (150,868 SQUARE FEET) TRACT OF LAN SITUATED IN THE BARNEY LOW SURVEY, ABSTRACT NO. 385, WILLIAMSON COUNTY, TEXAS; SAID 3.463 ACRE TRACT BEING A PORTION OF A REMAINDER OF A CALLED 76.27165 ACRE TRACT OF LAND DESCRIBED IN A SPECIAL WARRANTY DEED WITH VENDOR'S LIEN TO NOVAK WESTINGHOUSE, LP AND RECORDED IN DOCUMENT NO. 2014073967 OF THE OFFICIAL PUBLIC RECORDS OF WILLIAMSON COUNTY, TEXAS (O.P.R.W.C.T.); SAID 3.463 ACRE TRACT BEING MORE PARTICULARLY DESCRIBED BY METES AND BOUNDS AS FOLLOWS:

BEGINNING at a found 1/2-inch iron rod with yellow cap stamped "Bury Partners" marking common east corner of a called 19.4894 acre tract of land described in a Special Warranty Deed with Vendor's Lien to KDR Equities, LLC and recorded in Document No. 2012082150 O.P.R.W.C.T., and the north corner of Oakmont Drive (100 foot right-of-way width), also called a 3.823 acre tract of land described in that Special Warranty Deed to the City of Round Rock and recorded in Document No. 2014014196 O.P.R.W.C.T., said point also being on the southwest line of said 76.27165 acre remainder tract, for an angle point on the southwest line and POINT OF BEGINNING of the herein described tract;

THENCE (L1) North 20° 59' 09" West, with the common southwest line of said 76.27165 acre remainder tract and the northeast line of said 19.4894 acre tract, a distance o 70.89 feet to a set 1/2-inch iron rod with cap stamped "Wallace Group" for the west corner of the herein described tract, from which a found 1/2-inch iron rod with orange cap stamped "RPLS 2218" bears North 20° 59' 09" West, a distance of 468.78 feet;

THENCE departing said common line, and traveling across the interior of said 76.27165 acre remainder tract, the following three (3) calls;

1) (L2) North 30° 34' 04" East, a distance of 38.61 feet to a set 1/2-inch iron rod with cap stamped "Wallace Group" for a point of curvature and the beginning of a curve to the right of the herein described tract;

2) (C1) In a Northeasterly direction, with said curve to the right, having a central angle of 23° 30' 27", a radius of 821.00 feet, an arc length of 336.84 feet, and a chord bearing and distance of North 42° 19' 18" East - 334.49 feet to a set 1/2-inch iron rod with cap stamped "Wallace Group" for a point of tangency of the herein described tract and end of said curve;

3) North 54° 04' 31" East, a distance of 960.75 feet to a set 1/2-inch iron rod with cap stamped "Wallace Group" on the common northeast line of said 76.27165 acre remainder tract and the southwest line of a remainder of a called 113.49 acre tract of land described in a Deed to New Westinghouse Investors, LLC and recorded in Document No. 2011050295 O.P.R.W.C.T., for the north corner of the herein described tract, from which a found 1/2-inch with yellow cap stamped "Forest RPLS 1847" for the west corner of said 113.49 acre remainder tract bears, North 20° 03' 05" West, a distance of 976.18 feet;

THENCE South 20° 03' 05" East, with common northeast line of said 76.27165 acre remainder tract and the southwest line of said 113.49 acre remainder tract, a distance of 116.44 feet to a set 1/2-inch iron rod with cap stamped "Wallace Group" for the east corner of the herein described tract, from which a 1/2-inch iron rod found for the east corner of said 76.27165 acre remainder tract bears, South 20° 03' 05" East, a distance of 1166.90 feet;

THENCE departing said common line, and traveling across the interior of said 76.27165 acre remainder tract, the following two (2) calls:

1) South 54° 04' 31" West, a distance of 928.90 feet to a set 1/2-inch iron rod with cap stamped "Wallace Group" for a point of curvature of the herein described tract and being the beginning of a curve to the left;

2) (C2) In a Southwesterly direction, with said curve to the left, having a central angle of 34° 49' 19", a radius of 709.00 feet, an arc length of 430.90 feet, and a chord bearing and distance of South 36° 39' 52" West - 424.30 feet to a set 1/2-inch iron rod with cap stamped "Wallace Group" on the common line of the southwest line of said 76.27165 acre remainder tract and the northeast line of Lot 1, Block C, CPG Partners Commercial Tract Section 5, filed November 29, 2005 and recorded in Cabinet BB, Slides 60-61 of Plat Records of Williamson County, Texas, for the south corner of the herein described tract and end of said curve;

THENCE with the common southwest line of said 76.27165 acre remainder tract and in part with the northeast line of said Lot 1 and said Oakmont Drive, the following two (2) calls:

1) (L3) North 20° 56' 54" West, pass a found 1/2-inch iron rod with yellow cap stamped "Bury Partners" for the common north corner of said Lot 1 and the northeast corner of said Oakmont Drive at a distance of 49.89 feet, continuing for a total distance of 73.56 feet to a 1/2-inch iron rod found for an angle point of the herein described tract;

2) (L4) North 19° 25' 57" West, a distance of 16.55 feet to the POINT OF BEGINNING and containing 3.463 acres (150,868 square feet) of land, more or less, based on the survey and exhibit drawing made by The Wallace Group, Round Rock, Texas.

The Real Property or its address is commonly known as 76 acres of land in Georgetown, TX.

CROSS-COLLATERALIZATION. In addition to the Note, this Deed of Trust secures all obligations, debts and liabilities, plus interest thereon, of Grantor to Lender, or any one or more of them, as well as all claims by Lender against Grantor or any one or more of them, whether now existing or hereafter arising, whether related or unrelated to the purpose of the Note, whether voluntary or otherwise, whether due or not due, direct or indirect, determined or undetermined, absolute or contingent, liquidated or unliquidated, whether Grantor may be liable individually or jointly with others, whether obligated as guarantor, surety, accommodation party or otherwise. However, this Deed of Trust shall not secure, and the "Indebtedness" shall not include, any obligations arising under Subchapters E and F of Chapter 342 of the Texas Finance Code, as amended.

FUTURE ADVANCES. In addition to the Note, this Deed of Trust secures all future advances made by Lender to Grantor whether or not the advances are made pursuant to a commitment. Specifically, without limitation, this Deed of Trust secures, in addition to the amounts specified in the Note, all future amounts Lender in its discretion may loan to Grantor, together with all interest thereon.

Grantor hereby absolutely assigns to Lender (also known as Beneficiary in this Deed of Trust) all of Grantor's right, title, and interest in and to all present and future leases of the Property and all Rents from the Property. In addition, Grantor grants to Lender a Uniform Commercial Code security interest in the Personal Property and Rents.

THIS DEED OF TRUST, INCLUDING THE ASSIGNMENT OF RENTS AND THE SECURITY INTEREST IN THE RENTS AND PERSONAL PROPERTY, IS GIVEN TO SECURE (A) PAYMENT OF THE INDEBTEDNESS AND (B) PERFORMANCE OF ANY AND ALL OBLIGATIONS UNDER THE NOTE, THE RELATED DOCUMENTS, AND THIS DEED OF TRUST. THIS DEED OF TRUST IS GIVEN AND ACCEPTED ON THE FOLLOWING TERMS:

PAYMENT AND PERFORMANCE. Except as otherwise provided in this Deed of Trust, Grantor shall pay to Lender all amounts secured by this Deed of Trust as they become due, and shall strictly and in a timely manner perform all of Grantor's obligations under the Note, this Deed of Trust, and the Related Documents.

PURPOSE OF LOAN. The Note in the amount of $800,000.00 represents, in part or in whole, cash or other financial accommodations advanced or committed by Lender to Grantor on June 6, 2019 at Grantor's request, of which Grantor hereby acknowledges receipt.

POSSESSION AND MAINTENANCE OF THE PROPERTY. Grantor agrees that Grantor's possession and use of the Property shall be governed by the following provisions:

Possession and Use. Until the occurrence of an Event of Default, Grantor may (1) remain in possession and control of the Property; (2) use, operate or manage the Property; and (3) collect the Rents from the Property.

Duty to Maintain. Grantor shall maintain the Property in tenantable condition and promptly perform all repairs, replacements, and maintenance necessary to preserve its value.

Compliance With Environmental Laws. Grantor represents and warrants to Lender that: (1) During the period of Grantor's ownership of the Property, there has been no use, generation, manufacture, storage, treatment, disposal, release or threatened release of any Hazardous Substance by any person on, under, about or from the Property; (2) Grantor has no knowledge of, or reason to believe that there has been, except as previously disclosed to and acknowledged by Lender in writing, (a) any breach or violation of any Environmental Laws, (b) any use, generation, manufacture, storage, treatment, disposal, release or threatened release of any Hazardous Substance on, under, about or from the Property by any prior owners or occupants of the Property, or (c) any actual or threatened litigation or claims of any kind by any person relating to such matters; and (3) Except as previously disclosed to and acknowledged by Lender in writing, (a) neither Grantor nor any tenant, contractor, agent or other authorized user of the Property shall use, generate, manufacture, store, treat, dispose of or release any Hazardous Substance on, under, about or from the Property; and (b) any such activity shall be conducted in compliance with all applicable federal, state, and local laws, regulations and ordinances, including without limitation all Environmental Laws. Grantor authorizes Lender and its agents to enter upon the Property to make such inspections and tests, at Grantor's expense, as Lender may deem appropriate to determine compliance of the Property with this section of the Deed of Trust. Any inspections or tests made by Lender shall be for Lender's purposes only and shall not be construed to create any responsibility or liability on the part of Lender to Grantor or to any other person. The representations and warranties contained herein are based on Grantor's due diligence in investigating the Property for Hazardous Substances. Grantor hereby (1) releases and waives any future claims against Lender for indemnity or contribution in the event Grantor becomes liable for cleanup or other costs under any such laws; and (2) agrees to indemnify, defend, and hold harmless Lender against any and all claims, losses, liabilities, damages, penalties, and expenses which Lender may directly or indirectly sustain or suffer resulting from a breach of this section of the Deed of Trust or as a consequence of any use, generation, manufacture, storage, disposal, release or threatened release occurring prior to Grantor's ownership or interest in the Property, whether or not the same was or should have been known to Grantor. The provisions of this section of the Deed of Trust, including the obligation to indemnify and defend, shall survive the payment of the Indebtedness and the satisfaction and reconveyance of the lien of this Deed of Trust and shall not be affected by Lender's acquisition of any interest in the Property, whether by foreclosure or otherwise.

Nuisance, Waste. Grantor shall not cause, conduct or permit any nuisance nor commit, permit, or suffer any stripping of or waste on or to the Property or any portion of the Property. Without limiting the generality of the foregoing, Grantor will not remove, or grant to any other party the right to remove, any timber, minerals (including oil and gas), coal, clay, scoria, soil, gravel or rock products without Lender's prior written consent. This restriction will not apply to rights and easements (such as gas and oil) not owned by Grantor and of which Grantor has informed Lender in writing prior to Grantor's signing of this Deed of Trust.

Removal of Improvements. Grantor shall not demolish or remove any Improvements from the Real Property without Lender's prior written consent. As a condition to the removal of any Improvements, Lender may require Grantor to make arrangements satisfactory to Lender to replace such Improvements with Improvements of at least equal value.

Lender's Right to Enter. Lender and Lender's agents and representatives may enter upon the Real Property at all reasonable times to attend to Lender's interests and to inspect the Real Property for purposes of Grantor's compliance with the terms and conditions of this Deed of Trust.

Compliance with Governmental Requirements. Grantor shall promptly comply with all laws, ordinances, and regulations, now or hereafter in effect, of all governmental authorities applicable to the use or occupancy of the Property, including without limitation, the Americans With Disabilities Act. Grantor may contest in good faith any such law, ordinance, or regulation and withhold compliance during any proceeding, including appropriate appeals, so long as Grantor has notified Lender in writing prior to doing so and so long as, in Lender's sole opinion, Lender's interests in the Property are not jeopardized. Lender may require Grantor to post adequate security or a surety bond, reasonably satisfactory to Lender, to protect Lender's interest.

Duty to Protect. Grantor agrees neither to abandon or leave unattended the Property. Grantor shall do all other acts, in addition to those acts set forth above in this section, which from the character and use of the Property are reasonably necessary to protect and preserve the Property.

DUE ON SALE - CONSENT BY LENDER. Lender may, at Lender's option, declare immediately due and payable all sums secured by this Deed of Trust upon the sale or transfer, without Lender's prior written consent, of all or any part of the Real Property, or any interest in the Real Property. A "sale or transfer" means the conveyance of Real Property or any right, title or interest in the Real Property; whether legal, beneficial or equitable; whether voluntary or involuntary; whether by outright sale, deed, installment sale contract, land contract, contract for deed, leasehold interest with a term greater than three (3) years, lease-option contract, or by sale, assignment, or transfer of any beneficial interest in

or to any land trust holding title to the Real Property, or by any other method of conveyance of an interest in the Real Property. If any Grantor is a corporation, partnership or limited liability company, transfer also includes any restructuring of the legal entity (whether by merger, division or otherwise) or any change in ownership of more than twenty-five percent (25%) of the voting stock, partnership interests or limited liability company interests, as the case may be, of such Grantor. However, this option shall not be exercised by Lender if such exercise is prohibited by federal law or by Texas law.

TAXES AND LIENS. The following provisions relating to the taxes and liens on the Property are part of this Deed of Trust:

Payment. Grantor shall pay when due (and in all events prior to delinquency) all taxes, special taxes, assessments, charges (including water and sewer), fines and impositions levied against or on account of the Property, and shall pay when due all claims for work done on or for services rendered or material furnished to the Property. Grantor shall maintain the Property free of all liens having priority over or equal to the interest of Lender under this Deed of Trust, except for the lien of taxes and assessments not due, except for the Existing Indebtedness referred to below, and except as otherwise provided in this Deed of Trust.

Right to Contest. Grantor may withhold payment of any tax, assessment, or claim in connection with a good faith dispute over the obligation to pay, so long as Lender's interest in the Property is not jeopardized. If a lien arises or is filed as a result of nonpayment, Grantor shall within fifteen (15) days after the lien arises or, if a lien is filed, within fifteen (15) days after Grantor has notice of the filing, secure the discharge of the lien, or if requested by Lender, deposit with Lender cash or a sufficient corporate surety bond or other security satisfactory to Lender in an amount sufficient to discharge the lien plus any costs and Lender's reasonable attorneys' fees, or other charges that could accrue as a result of a foreclosure or sale under the lien. In any contest, Grantor shall defend itself and Lender and shall satisfy any adverse judgment before enforcement against the Property. Grantor shall name Lender as an additional obligee under any surety bond furnished in the contest proceedings.

Evidence of Payment. Grantor shall upon demand furnish to Lender satisfactory evidence of payment of the taxes or assessments and shall authorize the appropriate governmental official to deliver to Lender at any time a written statement of the taxes and assessments against the Property.

Notice of Construction. Grantor shall notify Lender at least fifteen (15) days before any work is commenced, any services are furnished, or any materials are supplied to the Property, if any mechanic's lien, materialmen's lien, or other lien could be asserted on account of the work, services, or materials. Grantor will upon request of Lender furnish to Lender advance assurances satisfactory to Lender that Grantor can and will pay the cost of such improvements.

PROPERTY DAMAGE INSURANCE. The following provisions relating to insuring the Property are a part of this Deed of Trust.

Maintenance of Insurance. Grantor shall procure and maintain policies of fire insurance with standard extended coverage endorsements on a fair value basis for the full insurable value covering all improvements on the Real Property in an amount sufficient to avoid application of any coinsurance clause, and with a standard mortgagee clause in favor of Lender. Grantor shall also procure and maintain comprehensive general liability insurance in such coverage amounts as Lender may request with Trustee and Lender being named as additional insureds in such liability insurance policies. Additionally, Grantor shall maintain such other insurance, including but not limited to hazard, business interruption, and boiler insurance, as Lender may reasonably require. Policies shall be written in form, amounts, coverages and basis reasonably acceptable to Lender, with losses made payable to Lender. GRANTOR MAY FURNISH THE REQUIRED INSURANCE WHETHER THROUGH EXISTING POLICIES OWNED OR CONTROLLED BY GRANTOR OR THROUGH EQUIVALENT INSURANCE FROM ANY INSURANCE COMPANY AUTHORIZED TO TRANSACT BUSINESS IN THE STATE OF TEXAS. If Grantor fails to provide any required insurance or fails to continue such insurance in force, Lender may, but shall not be required to, do so at Grantor's expense, and the cost of the insurance will be added to the Indebtedness. If any such insurance is procured by Lender, Grantor will be so notified, and Grantor will have the option of furnishing equivalent insurance through any insurer authorized to transact business in Texas. Grantor, upon request of Lender, will deliver to Lender from time to time the policies or certificates of insurance in form satisfactory to Lender, including stipulations that coverages will not be cancelled or diminished without at least ten (10) days prior written notice to Lender. Each insurance policy also shall include an endorsement providing that coverage in favor of Lender will not be impaired in any way by any act, omission or default of Grantor or any other person. Should the Real Property be located in an area designated by the Administrator of the Federal Emergency Management Agency as a special flood hazard area, Grantor agrees to obtain and maintain Federal Flood Insurance, if available, for the full unpaid principal balance of the loan and any prior liens on the property securing the loan, up to the maximum policy limits set under the National Flood Insurance Program, or as otherwise required by Lender, and to maintain such insurance for the term of the loan.

Application of Proceeds. Grantor shall promptly notify Lender of any loss or damage to the Property if the estimated cost of repair or replacement exceeds $5,000.00. Lender may make proof of loss if Grantor fails to do so within fifteen (15) days of the casualty. Whether or not Lender's security is impaired, Lender may, at Lender's election, receive and retain the proceeds of any insurance and apply the proceeds to the reduction of the Indebtedness, payment of any lien affecting the Property, or the restoration and repair of the Property. If Lender elects to apply the proceeds to restoration and repair, Grantor shall repair or replace the damaged or destroyed Improvements in a manner satisfactory to Lender. Lender shall, upon satisfactory proof of such expenditure, pay or reimburse Grantor from the proceeds for the reasonable cost of repair or restoration if Grantor is not in default under this Deed of Trust. Any proceeds which have not been disbursed within 180 days after their receipt and which Lender has not committed to the repair or restoration of the Property shall be used first to pay any amount owing to Lender under this Deed of Trust, then to pay accrued interest, and the remainder, if any, shall be applied to the principal balance of the Indebtedness. If Lender holds any proceeds after payment in full of the Indebtedness, such proceeds shall be paid to Grantor as Grantor's interests may appear.

Compliance with Existing Indebtedness. During the period in which any Existing Indebtedness described below is in effect, compliance with the insurance provisions contained in the instrument evidencing such Existing Indebtedness shall constitute compliance with the insurance provisions under this Deed of Trust, to the extent compliance with the terms of this Deed of Trust would constitute a duplication of insurance requirement. If any proceeds from the insurance become payable on loss, the provisions in this Deed of Trust for division of proceeds shall apply only to that portion of the proceeds not payable to the holder of the Existing Indebtedness.

Grantor's Report on Insurance. Upon request of Lender, however not more than once a year, Grantor shall furnish to Lender a report on each existing policy of insurance showing: (1) the name of the insurer; (2) the risks insured; (3) the amount of the policy; (4) the property insured, the then current replacement value of such property, and the manner of determining that value; and (5) the expiration date of the policy. Grantor shall, upon request of Lender, have an independent appraiser satisfactory to Lender determine the cash value replacement cost of the Property.

LENDER'S EXPENDITURES. If any action or proceeding is commenced that would materially affect Lender's interest in the Property or if Grantor fails to comply with any provision of this Deed of Trust or any Related Documents, including but not limited to Grantor's failure to comply with

any obligation to maintain Existing Indebtedness in good standing as required below, or to discharge or pay when due any amounts Grantor is required to discharge or pay under this Deed of Trust or any Related Documents, Lender on Grantor's behalf may (but shall not be obligated to) take any action that Lender deems appropriate, including but not limited to discharging or paying all taxes, liens, security interests, encumbrances and other claims, at any time levied or placed on the Property and paying all costs for insuring, maintaining and preserving the Property. All such expenditures paid by Lender for such purposes will then bear interest at the Note rate from the date paid by Lender to the date of repayment by Grantor. To the extent permitted by applicable law, all such expenses will become a part of the Indebtedness and, at Lender's option, will (A) be payable on demand; (B) be added to the balance of the Note and be apportioned among and be payable with any installment payments to become due during either (1) the term of any applicable insurance policy; or (2) the remaining term of the Note; or (C) be treated as a balloon payment which will be due and payable at the Note's maturity. The Deed of Trust also will secure payment of these amounts. Such right shall be in addition to all other rights and remedies to which Lender may be entitled upon Default.

WARRANTY; DEFENSE OF TITLE. The following provisions relating to ownership of the Property are a part of this Deed of Trust:

Title. Grantor warrants that: (a) Grantor holds good and marketable title of record to the Property in fee simple, free and clear of all liens and encumbrances other than those set forth in the Real Property description or in the Existing Indebtedness section below or in any title insurance policy, title report, or final title opinion issued in favor of, and accepted by, Lender in connection with this Deed of Trust, and (b) Grantor has the full right, power, and authority to execute and deliver this Deed of Trust to Lender.

Defense of Title. Subject to the exception in the paragraph above, Grantor warrants and will forever defend the title to the Property against the lawful claims of all persons. In the event any action or proceeding is commenced that questions Grantor's title or the interest of Trustee or Lender under this Deed of Trust, Grantor shall defend the action at Grantor's expense. Grantor may be the nominal party in such proceeding, but Lender shall be entitled to participate in the proceeding and to be represented in the proceeding by counsel of Lender's own choice, and Grantor will deliver, or cause to be delivered, to Lender such instruments as Lender may request from time to time to permit such participation.

Compliance With Laws. Grantor warrants that the Property and Grantor's use of the Property complies with all existing applicable laws, ordinances, and regulations of governmental authorities.

Survival of Representations and Warranties. All representations, warranties, and agreements made by Grantor in this Deed of Trust shall survive the execution and delivery of this Deed of Trust, shall be continuing in nature, and shall remain in full force and effect until such time as Grantor's Indebtedness shall be paid in full.

EXISTING INDEBTEDNESS. The following provisions concerning Existing Indebtedness are a part of this Deed of Trust:

Existing Lien. The lien of this Deed of Trust securing the Indebtedness shall be subordinate to the lien securing payment of an existing obligation with an account number of 68520 to Vista Bank. The existing obligation has a current principal balance of approximately $3,300,000.00 and is in the original principal amount of $3,300,000.00. Grantor expressly covenants and agrees to pay, or see to the payment of, the Existing Indebtedness and to prevent any default on such indebtedness, any default under the instruments evidencing such indebtedness, or any default under any security documents for such indebtedness.

No Modification. Grantor shall not enter into any agreement with the holder of any mortgage, deed of trust, or other security agreement which has priority over this Deed of Trust by which that agreement is modified, amended, extended, or renewed without the prior written consent of Lender. Grantor shall neither request nor accept any future advances under any such security agreement without the prior written consent of Lender.

CONDEMNATION, JUDGMENTS AND AWARDS. The following provisions relating to condemnation proceedings, judgments, decrees and awards for injury to the Property are a part of this Deed of Trust:

Proceedings. If any proceeding in condemnation is filed, Grantor shall promptly notify Lender in writing, and Grantor shall promptly take such steps as may be necessary to defend the action and obtain the award. Grantor may be the nominal party in such proceeding, but Lender shall be entitled to participate in the proceeding and to be represented in the proceeding by counsel of its own choice, and Grantor will deliver or cause to be delivered to Lender such instruments and documentation as may be requested by Lender from time to time to permit such participation.

Application of Net Proceeds. To the extent permitted by applicable law, all judgments, decrees and awards for injury or damage to the Property, or any part of the Property, and awards pursuant to proceedings for condemnation of the Property, are hereby absolutely assigned to Lender, and if all or any part of the Property is condemned by eminent domain proceedings or by any proceeding or purchase in lieu of condemnation, Lender may at its election require that all or any portion of the net proceeds of the award be applied to the Indebtedness or the repair or restoration of the Property. The net proceeds of the award, judgment or decree shall mean the award after payment of all reasonable costs, expenses, and attorneys' fees incurred by Trustee or Lender in connection with the condemnation.

SECURITY AGREEMENT; FINANCING STATEMENTS. The following provisions relating to this Deed of Trust as a security agreement are a part of this Deed of Trust:

Security Agreement. This instrument shall constitute a Security Agreement to the extent any of the Property constitutes fixtures, and Lender shall have all of the rights of a secured party under the Uniform Commercial Code as amended from time to time.

Security Interest. Upon request by Lender, Grantor shall take whatever action is requested by Lender to perfect and continue Lender's security interest in the Rents and Personal Property. In addition to recording this Deed of Trust in the real property records, Lender may, at any time and without further authorization from Grantor, file executed counterparts, copies or reproductions of this Deed of Trust as a financing statement. Grantor shall reimburse Lender for all expenses incurred in perfecting or continuing this security interest. Upon default, Grantor shall not remove, sever or detach the Personal Property from the Property. Upon default, Grantor shall assemble any Personal Property not affixed to the Property in a manner and at a place reasonably convenient to Grantor and Lender and make it available to Lender within three (3) days after receipt of written demand from Lender to the extent permitted by applicable law.

Addresses. The mailing addresses of Grantor (debtor) and Lender (secured party) from which information concerning the security interest granted by this Deed of Trust may be obtained (each as required by the Uniform Commercial Code) are as stated on the first page of this Deed of Trust.

FURTHER ASSURANCES; ATTORNEY-IN-FACT. The following provisions relating to further assurances and attorney-in-fact are a part of this Deed of Trust:

Further Assurances. At any time, and from time to time, upon request of Lender, Grantor will make, execute and deliver, or will cause to

be made, executed or delivered, to Lender or to Lender's designee, and when requested by Lender, cause to be filed, recorded, refiled, or rerecorded, as the case may be, at such times and in such offices and places as Lender may deem appropriate, any and all such mortgages, deeds of trust, security deeds, security agreements, financing statements, continuation statements, instruments of further assurance, certificates, and other documents as may, in the sole opinion of Lender, be necessary or desirable in order to effectuate, complete, perfect, continue, or preserve (1) Grantor's obligations under the Note, this Deed of Trust, and the Related Documents, and (2) the liens and security interests created by this Deed of Trust on the Property, whether now owned or hereafter acquired by Grantor. Unless prohibited by law or Lender agrees to the contrary in writing, Grantor shall reimburse Lender for all costs and expenses incurred in connection with the matters referred to in this paragraph.

Attorney-in-Fact. If Grantor fails to do any of the things referred to in the preceding paragraph, Lender may do so for and in the name of Grantor and at Grantor's expense. For such purposes, Grantor hereby irrevocably appoints Lender as Grantor's attorney-in-fact for the purpose of making, executing, delivering, filing, recording, and doing all other things as may be necessary or desirable, in Lender's sole opinion, to accomplish the matters referred to in the preceding paragraph.

FULL PERFORMANCE. If Grantor pays all the Indebtedness, including without limitation all future advances, when due, and otherwise performs all the obligations imposed upon Grantor under this Deed of Trust, Lender shall execute and deliver to Grantor a release of this Deed of Trust lien and suitable statements of termination of any financing statement on file evidencing Lender's security interest in the Rents and the Personal Property. However, it is agreed that the payment of all the Indebtedness and performance of such obligations shall not terminate this Deed of Trust unless the liens and interests created hereby are released by Lender by a proper recordable instrument. Any filing fees required by law shall be paid by Grantor, if permitted by applicable law.

EVENTS OF DEFAULT. Each of the following, at Lender's option, shall constitute an Event of Default under this Deed of Trust:

Payment Default. Grantor fails to make any payment when due under the Indebtedness.

Other Defaults. Grantor fails to comply with or to perform any other term, obligation, covenant or condition contained in this Deed of Trust or in any of the Related Documents or to comply with or to perform any term, obligation, covenant or condition contained in any other agreement between Lender and Grantor.

Compliance Default. Failure to comply with any other term, obligation, covenant or condition contained in this Deed of Trust, the Note or in any of the Related Documents.

Default on Other Payments. Failure of Grantor within the time required by this Deed of Trust to make any payment for taxes or insurance, or any other payment necessary to prevent filing of or to effect discharge of any lien.

Default in Favor of Third Parties. Should Grantor default under any loan, extension of credit, security agreement, purchase or sales agreement, or any other agreement, in favor of any other creditor or person that may materially affect any of Grantor's property or Grantor's ability to repay the Indebtedness or Grantor's ability to perform Grantor's obligations under this Deed of Trust or any of the Related Documents.

False Statements. Any warranty, representation or statement made or furnished to Lender by Grantor or on Grantor's behalf under this Deed of Trust or the Related Documents is false or misleading in any material respect, either now or at the time made or furnished or becomes false or misleading at any time thereafter.

Defective Collateralization. This Deed of Trust or any of the Related Documents ceases to be in full force and effect (including failure of any collateral document to create a valid and perfected security interest or lien) at any time and for any reason.

Death or Insolvency. The dissolution or termination of Grantor's existence as a going business or the death of any partner, the insolvency of Grantor, the appointment of a receiver for any part of Grantor's property, any assignment for the benefit of creditors, any type of creditor workout, or the commencement of any proceeding under any bankruptcy or insolvency laws by or against Grantor.

Creditor or Forfeiture Proceedings. Commencement of foreclosure or forfeiture proceedings, whether by judicial proceeding, self-help, repossession or any other method, by any creditor of Grantor or by any governmental agency against any property securing the Indebtedness. This includes a garnishment of any of Grantor's accounts, including deposit accounts, with Lender. However, this Event of Default shall not apply if there is a good faith dispute by Grantor as to the validity or reasonableness of the claim which is the basis of the creditor or forfeiture proceeding and if Grantor gives Lender written notice of the creditor or forfeiture proceeding and deposits with Lender monies or a surety bond for the creditor or forfeiture proceeding, in an amount determined by Lender, in its sole discretion, as being an adequate reserve or bond for the dispute.

Breach of Other Agreement. Any breach by Grantor under the terms of any other agreement between Grantor and Lender that is not remedied within any grace period provided therein, including without limitation any agreement concerning any indebtedness or other obligation of Grantor to Lender, whether existing now or later.

Events Affecting Guarantor. Any of the preceding events occurs with respect to any Guarantor of any of the Indebtedness or any Guarantor dies or becomes incompetent, or revokes or disputes the validity of, or liability under, any Guaranty of the Indebtedness..

Adverse Change. A material adverse change occurs in Grantor's financial condition, or Lender believes the prospect of payment or performance of the Indebtedness is impaired.

Insecurity. Lender in good faith believes itself insecure.

Existing Indebtedness. The payment of any installment of principal or any interest on the Existing Indebtedness is not made within the time required by the promissory note evidencing such indebtedness, or a default occurs under the instrument securing such indebtedness and is not cured during any applicable grace period in such instrument, or any suit or other action is commenced to foreclose any existing lien on the Property.

Right to Cure. If any default, other than a default in payment, is curable and if Grantor has not been given a notice of a breach of the same provision of this Deed of Trust within the preceding twelve (12) months, it may be cured if Grantor, after Lender sends written notice to Grantor demanding cure of such default: (1) cures the default within ten (10) days; or (2) if the cure requires more than ten (10) days, immediately initiates steps which Lender deems in Lender's sole discretion to be sufficient to cure the default and thereafter continues and completes all reasonable and necessary steps sufficient to produce compliance as soon as reasonably practical.

RIGHTS AND REMEDIES ON DEFAULT. If an Event of Default occurs under this Deed of Trust, at any time thereafter, Trustee or Lender may exercise any one or more of the following rights and remedies:

Election of Remedies. Election by Lender to pursue any remedy shall not exclude pursuit of any other remedy, and an election to make expenditures or to take action to perform an obligation of Grantor under this Deed of Trust, after Grantor's failure to perform, shall not affect Lender's right to declare a default and exercise its remedies.

Accelerate Indebtedness. Lender may declare the unpaid principal balance of the indebtedness due and payable. In no event will Grantor be required to pay any unearned interest.

Foreclosure. If Lender invokes the power of sale, Trustee, at the request of Lender, may sell all or any portion of the Property at public auction to the highest bidder for cash at the location within the courthouse designated by the County Commissioners Court, or if no such area has been designated, at the area designated in the notice of sale within the courthouse, between the hours of 10:00 A.M. and 4:00 P.M. on the first Tuesday of any month, after the Trustee or its agent has given notice of the time and place of sale and of the property to be sold as required by the Texas Property Code, as then amended.

UCC Remedies. With respect to all or any part of the Personal Property, Lender shall have all the rights and remedies of a secured party under the Uniform Commercial Code.

Collect Rents. As additional security for the payment of the Indebtedness, Grantor hereby assigns to Lender all Rents as defined in the Definitions section of this Deed of Trust. Lender shall have the right at any time, and even though no Event of Default shall have occurred under this Deed of Trust, to collect and receive the Rents. Lender shall provide any notice required by applicable law with regard to such enforcement of its right to collect and receive the Rents. In addition, if the Property is vacant, Lender may rent or lease the Property. Lender shall not be liable for its failure to rent the Property, to collect any Rents, or to exercise diligence in any matter relating to the Rents; Lender shall be accountable only for Rents actually received. Lender neither has nor assumes any obligation as lessor or landlord with respect to any occupant of the Property. Rents so received shall be applied by Lender first to the remaining unpaid balance of the Indebtedness, in such order or manner as Lender shall elect, and the residue, if any, shall be paid to the person or persons legally entitled to the residue.

Trustee's Powers. Grantor hereby jointly and severally authorizes and empowers Trustee to sell all or any portion of the Property together or in lots or parcels, as Trustee may deem expedient, and to execute and deliver to the purchaser or purchasers of such Property good and sufficient deeds of conveyance of fee simple title, or of lesser estates, and bills of sale and assignments, with covenants of general warranty made on Grantor's behalf. In no event shall Trustee be required to exhibit, present or display at any such sale any of the Property to be sold at such sale. The Trustee making such sale shall receive the proceeds of the sale and shall apply the same as provided below. Payment of the purchase price to Trustee shall satisfy the liability of the purchaser at any such sale of the Property, and such person shall not be bound to look after the application of the proceeds.

Appoint Receiver. Lender shall have the right to have a receiver appointed to take possession of all or any part of the Property, with the power to protect and preserve the Property, to operate the Property preceding foreclosure or sale, and to collect the Rents from the Property and apply the proceeds, over and above the cost of the receivership, against the Indebtedness. The receiver may serve without bond if permitted by law. Lender's right to the appointment of a receiver shall exist whether or not the apparent value of the Property exceeds the Indebtedness by a substantial amount. Employment by Lender shall not disqualify a person from serving as a receiver.

Tenancy at Sufferance. If Grantor remains in possession of the Property after the Property is sold as provided above or Lender otherwise becomes entitled to possession of the Property upon default of Grantor, Grantor shall become a tenant at sufferance of Lender or the purchaser of the Property and shall, at Lender's option, either (1) pay a reasonable rental for the use of the Property, (2) vacate the Property immediately upon the demand of Lender, or (3) if such tenants refuse to surrender possession of the Property upon demand, the purchaser shall be entitled to institute and maintain the statutory action of forcible entry and detainer and procure a writ of possession thereunder, and Grantor expressly waives all damages sustained by reason thereof.

Other Remedies. Trustee or Lender shall have any other right or remedy provided in this Deed of Trust or the Note or available at law or in equity.

Sale of the Property. To the extent permitted by applicable law, Grantor hereby waives any and all rights to have the Property marshalled. In exercising its rights and remedies, the Trustee or Lender shall be free to sell all or any part of the Property together or separately, in one sale or by separate sales. Lender shall be entitled to bid at any public sale on all or any portion of the Property. Trustee may convey all or any part of the Property to the highest bidder for cash with a general warranty binding Grantor, subject to prior liens and to other exceptions to conveyance and warranty. Grantor waives all requirements of appraisement, if any. The affidavit of any person having knowledge of the facts to the effect that proper notice as required by the Texas Property Code was given shall be prima facie evidence of the fact that such notice was in fact given. Recitals and statements of fact in any notice or in any conveyance to the purchaser or purchasers of the Property in any foreclosure sale under this Deed of Trust shall be prima facie evidence of the truth of such facts, and all prerequisites and requirements necessary to the validity of any such sale shall be presumed to have been performed. Any sale under the powers granted by this Deed of Trust shall be a perpetual bar against Grantor, Grantor's heirs, successors, assigns and legal representatives.

Proceeds. Trustee shall pay the proceeds of any sale of the Property (a) first, to the expenses of foreclosure, including reasonable fees or charges paid to the Trustee, including but not limited to fees for enforcing the lien, posting for sale, selling, or releasing the Property, (b) then to Lender the full amount of the Indebtedness, (c) then to any amount required by law to be paid before payment to Grantor, and (d) the balance, if any, to Grantor.

Attorneys' Fees; Expenses. If Lender institutes any suit or action to enforce any of the terms of this Deed of Trust, Lender shall be entitled to recover such sum as the court may adjudge reasonable as Lender's attorneys' fees at trial and upon any appeal. Whether or not any court action is involved, and to the extent not prohibited by law, all reasonable expenses Lender incurs that in Lender's opinion are necessary at any time for the protection of its interest or the enforcement of its rights shall become a part of the Indebtedness payable on demand and shall bear interest at the Note rate from the date of the expenditure until repaid. Expenses covered by this paragraph include, without limitation, however subject to any limits under applicable law, Lender's reasonable attorneys' fees and Lender's legal expenses, whether or not there is a lawsuit, including Lender's reasonable attorneys' fees and expenses for bankruptcy proceedings (including efforts to modify or vacate any automatic stay or injunction), appeals, and any anticipated post-judgment collection services, the cost of searching records, obtaining title reports (including foreclosure reports), surveyors' reports, and appraisal fees, title insurance, and fees for the Trustee, to the extent permitted by applicable law. Grantor also will pay any court costs, in addition to all other sums provided by law. In the event of foreclosure of this Deed of Trust, Lender shall be entitled to recover from Grantor Lender's reasonable attorneys' fees and actual disbursements that Lender necessarily incurs in pursuing such foreclosure.

POWERS AND OBLIGATIONS OF TRUSTEE. The following provisions relating to the powers and obligations of Trustee are part of this Deed of Trust:

Powers of Trustee. In addition to all powers of Trustee arising as a matter of law, Trustee shall have the power to take the following actions with respect to the Property upon the written request of Lender and Grantor: (a) join in preparing and filing a map or plat of the Real Property, including the dedication of streets or other rights to the public; (b) join in granting any easement or creating any restriction on the Real Property; and (c) join in any subordination or other agreement affecting this Deed of Trust or the interest of Lender under this Deed of Trust.

Obligations to Notify. Trustee shall not be obligated to notify any other lienholder of the Property of the commencement of a foreclosure proceeding or of the commencement of any other action to which Lender may avail itself as a remedy, except to the extent required by applicable law or by written agreement.

Trustee. In addition to the rights and remedies set forth above, with respect to all or any part of the Property, the Trustee shall have the right to foreclose by notice and sale, and Lender shall have the right to foreclose by judicial foreclosure, in either case in accordance with and to the full extent provided by applicable law.

Substitute Trustee. Lender, at Lender's option, from time to time, and more than once, may appoint in writing a successor or substitute trustee, with or without cause, including the resignation, absence, death, inability, refusal or failure to act of the Trustee. The successor or substitute trustee may be appointed without ever requiring the resignation of the former trustee and without any formality except for the execution and acknowledgment of the appointment by the beneficiary of this Deed of Trust. The successor or substitute trustee shall then succeed to all rights, obligations, and duties of the Trustee. This appointment may be made on Lender's behalf by the President, any Vice President, Secretary, or Cashier of Lender.

NOTICES. Any notice required to be given under this Deed of Trust, including without limitation any notice of default and any notice of sale shall be given in writing, and shall be effective when actually delivered, when actually received by telefacsimile (unless otherwise required by law), when deposited with a nationally recognized overnight courier, or, if mailed, when deposited in the United States mail, as first class, certified or registered mail postage prepaid, directed to the addresses shown near the beginning of this Deed of Trust. Any party may change its address for notices under this Deed of Trust by giving formal written notice to the other parties, specifying that the purpose of the notice is to change the party's address. For notice purposes, Grantor agrees to keep Lender informed at all times of Grantor's current address. Unless otherwise provided or required by law, if there is more than one Grantor, any notice given by Lender to any Grantor is deemed to be notice given to all Grantors.

INDEMNITY. Grantor shall indemnify, defend, protect and hold harmless beneficiary and trustee, their subsidiaries, directors, officers, employees, representatives, agents, successors and assigns from and against any and all liability, damage, loss, cost or expense (including, without limitation, attorneys' fee and expenses), action, proceeding, claim or dispute incurred or suffered by the foregoing parties so indemnified, in respect of the following:

(i) Any litigation concerning this Deed of Trust, the other loan documents or the mortgaged property, or any interest of grantor or beneficiary therein;

(ii) Any dispute, including disputes as to the disbursement of proceeds of the note not yet disbursed;

(iii) Any action taken or not taken by beneficiary or trustee which is allowed or permitted under this Deed of Trust or any of the other loan documents relating to grantor, the mortgaged property, or any constituent parties; and

(iv) Any action brought by beneficiary or trustee against grantor under this Deed of Trust or the other loan documents, whether or not such action is prosecuted to a final, non-appealable judgment.

The provisions of this section shall survive repayment of the indebtedness and performance of the obligations, the release of the lien of this Deed of Trust, any foreclosure (or action in lieu of foreclosure), the transfer by grantor of any or all of its right, title and interest in or to the property and the exercise by beneficiary of any and all remedies set forth herein or in the loan documents.

MISCELLANEOUS PROVISIONS. The following miscellaneous provisions are a part of this Deed of Trust:

Amendments. This Deed of Trust, together with any Related Documents, constitutes the entire understanding and agreement of the parties as to the matters set forth in this Deed of Trust. No alteration of or amendment to this Deed of Trust shall be effective unless given in writing and signed by the party or parties sought to be charged or bound by the alteration or amendment.

Annual Reports. If the Property is used for purposes other than Grantor's residence, Grantor shall furnish to Lender, upon request, a certified statement of net operating income received from the Property during Grantor's previous fiscal year in such form and detail as Lender shall require. "Net operating income" shall mean all cash receipts from the Property less all cash expenditures made in connection with the operation of the Property.

Caption Headings. Caption headings in this Deed of Trust are for convenience purposes only and are not to be used to interpret or define the provisions of this Deed of Trust.

Merger. There shall be no merger of the interest or estate created by this Deed of Trust with any other interest or estate in the Property at any time held by or for the benefit of Lender in any capacity, without the written consent of Lender.

Governing Law. This Deed of Trust will be governed by federal law applicable to Lender and, to the extent not preempted by federal law, the laws of the State of Texas without regard to its conflicts of law provisions. This Deed of Trust has been accepted by Lender in the State of Texas.

Choice of Venue. If there is a lawsuit, and if the transaction evidenced by this Deed of Trust occurred in Lubbock County, Grantor agrees upon Lender's request to submit to the jurisdiction of the courts of Lubbock County, State of Texas.

No Waiver by Lender. Lender shall not be deemed to have waived any rights under this Deed of Trust unless such waiver is given in writing and signed by Lender. No delay or omission on the part of Lender in exercising any right shall operate as a waiver of such right or any other right. A waiver by Lender of a provision of this Deed of Trust shall not prejudice or constitute a waiver of Lender's right otherwise to demand strict compliance with that provision or any other provision of this Deed of Trust. No prior waiver by Lender, nor any course of dealing between Lender and Grantor, shall constitute a waiver of any of Lender's rights or of any of Grantor's obligations as to any future transactions. Whenever the consent of Lender is required under this Deed of Trust, the granting of such consent by Lender in any instance

shall not constitute continuing consent to subsequent instances where such consent is required and in all cases such consent may be granted or withheld in the sole discretion of Lender.

Severability. If a court of competent jurisdiction finds any provision of this Deed of Trust to be illegal, invalid, or unenforceable as to any circumstance, that finding shall not make the offending provision illegal, invalid, or unenforceable as to any other circumstance. If feasible, the offending provision shall be considered modified so that it becomes legal, valid and enforceable. If the offending provision cannot be so modified, it shall be considered deleted from this Deed of Trust. Unless otherwise required by law, the illegality, invalidity, or unenforceability of any provision of this Deed of Trust shall not affect the legality, validity or enforceability of any other provision of this Deed of Trust.

Successors and Assigns. Subject to any limitations stated in this Deed of Trust on transfer of Grantor's interest, this Deed of Trust shall be binding upon and inure to the benefit of the parties, their successors and assigns. If ownership of the Property becomes vested in a person other than Grantor, Lender, without notice to Grantor, may deal with Grantor's successors with reference to this Deed of Trust and the indebtedness by way of forbearance or extension without releasing Grantor from the obligations of this Deed of Trust or liability under the indebtedness.

Time is of the Essence. Time is of the essence in the performance of this Deed of Trust.

DEFINITIONS. The following capitalized words and terms shall have the following meanings when used in this Deed of Trust. Unless specifically stated to the contrary, all references to dollar amounts shall mean amounts in lawful money of the United States of America. Words and terms used in the singular shall include the plural, and the plural shall include the singular, as the context may require. Words and terms not otherwise defined in this Deed of Trust shall have the meanings attributed to such terms in the Uniform Commercial Code:

Beneficiary. The word "Beneficiary" means Vista Bank, and its successors and assigns.

Borrower. The word "Borrower" means Novak Westinghouse, LP and includes all co-signers and co-makers signing the Note and all their successors and assigns.

Deed of Trust. The words "Deed of Trust" mean this Deed of Trust among Grantor, Lender, and Trustee, and includes without limitation all assignment and security interest provisions relating to the Personal Property and Rents.

Default. The word "Default" means the Default set forth in this Deed of Trust in the section titled "Default".

Environmental Laws. The words "Environmental Laws" mean any and all state, federal and local statutes, regulations and ordinances relating to the protection of human health or the environment, including without limitation the Comprehensive Environmental Response, Compensation, and Liability Act of 1980, as amended, 42 U.S.C. Section 9601, et seq. ("CERCLA"), the Superfund Amendments and Reauthorization Act of 1986, Pub. L. No. 99-499 ("SARA"), the Hazardous Materials Transportation Act, 49 U.S.C. Section 1801, et seq., the Resource Conservation and Recovery Act, 42 U.S.C. Section 6901, et seq., or other applicable state or federal laws, rules, or regulations adopted pursuant thereto.

Event of Default. The words "Event of Default" mean any of the events of default set forth in this Deed of Trust in the events of default section of this Deed of Trust.

Existing Indebtedness. The words "Existing Indebtedness" mean the indebtedness described in the Existing Liens provision of this Deed of Trust.

Grantor. The word "Grantor" means Novak Westinghouse, LP.

Guarantor. The word "Guarantor" means any guarantor, surety, or accommodation party of any or all of the indebtedness.

Guaranty. The word "Guaranty" means the guaranty from Guarantor to Lender, including without limitation a guaranty of all or part of the Note.

Hazardous Substances. The words "Hazardous Substances" mean materials that, because of their quantity, concentration or physical, chemical or infectious characteristics, may cause or pose a present or potential hazard to human health or the environment when improperly used, treated, stored, disposed of, generated, manufactured, transported or otherwise handled. The words "Hazardous Substances" are used in their very broadest sense and include without limitation any and all hazardous or toxic substances, materials or waste as defined by or listed under the Environmental Laws. The term "Hazardous Substances" also includes, without limitation, petroleum and petroleum by-products or any fraction thereof and asbestos.

Improvements. The word "Improvements" means all existing and future improvements, buildings, structures, mobile homes affixed on the Real Property, facilities, additions, replacements and other construction on the Real Property.

Indebtedness. The word "Indebtedness" means all principal, interest, and other amounts, costs and expenses payable under the Note or Related Documents, together with all renewals of, extensions of, modifications of, consolidations of and substitutions for the Note or Related Documents and any amounts expended or advanced by Lender to discharge Grantor's obligations or expenses incurred by Trustee or Lender to enforce Grantor's obligations under this Deed of Trust, together with interest on such amounts as provided in this Deed of Trust. Specifically, without limitation, indebtedness includes the future advances set forth in the Future Advances provision, together with all interest thereon and all amounts that may be indirectly secured by the Cross-Collateralization provision of this Deed of Trust.

Lender. The word "Lender" means Vista Bank, its successors and assigns.

Note. The word "Note" means the promissory note dated June 6, 2019, **in the original principal amount of $800,000.00** from Grantor to Lender, together with all renewals of, extensions of, modifications of, refinancings of, consolidations of, and substitutions for the promissory note or agreement. The maturity date of the Note is June 6, 2020. **NOTICE TO GRANTOR: THE NOTE CONTAINS A VARIABLE INTEREST RATE.**

Personal Property. The words "Personal Property" mean all equipment, fixtures, and other articles of personal property now or hereafter owned by Grantor, and now or hereafter attached or affixed to the Real Property; together with all accessions, parts, and additions to, all replacements of, and all substitutions for, any of such property; and together with all proceeds (including without limitation all insurance proceeds and refunds of premiums) from any sale or other disposition of the Property.

Property. The word "Property" means collectively the Real Property and the Personal Property.

Real Property. The words "Real Property" mean the real property, interests and rights, as further described in this Deed of Trust.

Related Documents. The words "Related Documents" mean all promissory notes, credit agreements, loan agreements, environmental agreements, guaranties, security agreements, mortgages, deeds of trust, security deeds, collateral mortgages, and all other instruments, agreements and documents, whether now or hereafter existing, executed in connection with the indebtedness.

Rents. The word "Rents" means all present and future rents, revenues, income, issues, royalties, profits, and other benefits derived from the Property. The word "Rents" shall also mean all "Rents" as defined in Chapter 64 of the Texas Property Code.

Trustee. The word "Trustee" means Troy Stegemoeller, whose address is 1508 Texas Ave, Lubbock, TX 79401 and any substitute or successor trustees.

GRANTOR ACKNOWLEDGES HAVING READ ALL THE PROVISIONS OF THIS DEED OF TRUST, AND GRANTOR AGREES TO ITS TERMS.

GRANTOR:

NOVAK WESTINGHOUSE, LP

NOVAK WESTINGHOUSE GP, LLC, General Partner of Novak Westinghouse, LP

By: _____
Jeffrey Novak, Manager of Novak Westinghouse GP, LLC

PARTNERSHIP ACKNOWLEDGMENT

STATE OF Texas)
) **SS**
COUNTY OF Williamson)

This instrument was acknowledged before me on June 6, 20 19 by **Jeffrey Novak, Manager of Novak Westinghouse GP, LLC, General Partner of Novak Westinghouse, LP**, a partner on behalf of Novak Westinghouse, LP, a partnership.

BARBARA JAMERSON
Notary Public, State of Texas
Notary ID# 185178-5
My Commission Expires
APRIL 17, 2022

Barbara Jamerson
Notary Public, State of Texas

LaserPro, Ver. 19.1.10.016 Copr. Finastra USA Corporation 1997, 2019. All Rights Reserved. - TX H:\CFI\LPL\G01.FC TR-36008 PR-118

ELECTRONICALLY RECORDED
OFFICIAL PUBLIC RECORDS
2019051590

Pages: 13 Fee: $65.00
06/11/2019 12:20 PM

Nancy E. Rister,County Clerk
Williamson County,Texas

SITE DEVELOPMENT PLAN FOR ASCEND WESTINGHOUSE 500 WESTINGHOUSE ROAD GEORGETOWN, TEXAS 78626

SUMMARY NOTES

OWNER: NOVAK WESTINGHOUSE
1500 RIVERY BLVD SUITE 2200
GEORGETOWN, TX 78628
(512) 943-4703
JCRAMER@NOVAKBROS.COM
WWW.NOVAKBROS.COM

DEVELOPER: DHI COMMUNITIES
1341 HORTON CIRCLE,
ARLINGTON, TEXAS, 76011
(817) 390-8200
EMAIL: BTJONES1@DRHORTON.COM
WWW.DRHORTON.COM

ENGINEER: BGE, INC., TBPE F-1046
1701 DIRECTORS BLVD, SUITE 1000
AUSTIN, TEXAS 78744
(512) 879-0400
E-MAIL: BGRACE@BGEINC.COM
WWW.BGEINC.COM

LANDSCAPE ARCHITECT: LAND DESIGN
5301 ALPHA ROAD, SUITE 24
DALLAS, TEXAS 75240
(214) 785-6009
E-MAIL: MVINTEN@LANDDESIGN.COM
WWW.LANDDESIGN.COM

ARCHITECT: W PARTNERSHIP, INC
5120 WOODWAY DR. SUITE 8000
HOUSTON, TEXAS 77056
(713) 993-0439
VICTORIA.KULBICK@WPARTNERSHIP.COM
WWW.WPARTNERSHIP.COM

MEP: JORDAN & SKALA ENGINEERS
17855 NORTH DALLAS PARKWAY, SUITE 320
DALLAS, TEXAS 752287
(469) 385-1615
GGRIBBLE@JORDANSKALA.COM
WWW.JORDANSKALA.COM

ZONING INFORMATION

PLANNED UNIT DEVELOPMENT (ORDINANCE 2018-03)

LAND USE SUMMARY

USE: MULTIFAMILY
NUMBER OF DWELLING UNITS: 300
DAILY TRIPS (24-HR UNADJUSTED): 1,844
SITE AREA: 14.5 ACRES
14.438 ACRES (AFTER R.O.W. DEDICATION)
PROPOSED IMPERVIOUS COVER: 8.06 ACRES (55.6%) - ON-SITE
9.06 ACRES - TOTAL IMPERVIOUS INCLUDING OFF-SITE IMPROVEMENTS

FLOODPLAIN INFORMATION

NO PORTION OF THIS SITE IS WITHIN THE BOUNDARIES OF THE 100-YEAR FLOODPLAIN AS DELINEATED ON THE FLOOD INSURANCE RATE MAP COMMUNITY PANEL NUMBER 48491C0485E, EFFECTIVE DATE SEPTEMBER 26, 2008.

LEGAL DESCRIPTION:

AW0385 AW0385 - LOW, B.C. SUR., ACRES 43.9
LOT 1, BLOCK A, 14.5 ACRES, ASCEND WESTINGHOUSE SUBDIVISION (2020-3-PFP)
ASCEND WESTINGHOUSE AS RECORDED UNDER DOC. NO. _____, REAL PROPERTY RECORDS OF WILLIAMSON COUNTY, TEXAS.

GENERAL NOTES

1. IT IS THE RESPONSIBILITY OF THE PROPERTY OWNER, AND SUCCESSORS TO THE CURRENT PROPERTY OWNER, TO ENSURE THE SUBJECT PROPERTY AND ANY IMPROVEMENTS ARE MAINTAINED IN CONFORMANCE WITH THIS SITE DEVELOPMENT PLAN.
2. THIS DEVELOPMENT SHALL COMPLY WITH ALL STANDARDS OF THE UNIFIED DEVELOPMENT CODE (UDC), THE CITY OF GEORGETOWN CONSTRUCTION STANDARDS AND SPECIFICATIONS MANUAL, THE DEVELOPMENT MANUAL AND ALL OTHER APPLICABLE CITY STANDARDS.
3. THIS SITE DEVELOPMENT PLAN SHALL MEET THE UDC STORMWATER REQUIREMENTS.
4. ALL SIGNAGE REQUIRES A SEPARATE APPLICATION AND APPROVAL FROM THE INSPECTION SERVICES DEPARTMENT. NO SIGNAGE IS APPROVED WITH THE SITE DEVELOPMENT PLAN.
5. SIDEWALKS SHALL BE PROVIDED IN ACCORDANCE WITH THE UDC.
6. DRIVEWAYS WILL REQUIRE APPROVAL BY THE DEVELOPMENT ENGINEER OF THE CITY OF GEORGETOWN.
7. OUTDOOR LIGHTING SHALL COMPLY WITH SECTION 7.04 OF THE UDC.
8. SCREENING OF MECHANICAL EQUIPMENT, DUMPSTERS AND PARKING SHALL COMPLY WITH CHAPTER 8 OF THE UDC. THE SCREENING IS SHOWN ON THE LANDSCAPE AND ARCHITECTURAL PLANS, AS APPLICABLE.
9. THE COMPANION LANDSCAPE PLAN HAS BEEN DESIGNED AND PLANT MATERIALS SHALL BE INSTALLED TO MEET ALL REQUIREMENTS OF THE UDC.
10. ALL MAINTENANCE OF REQUIRED LANDSCAPE SHALL COMPLY WITH THE MAINTENANCE STANDARDS OF CHAPTER 8 OF THE UDC.
11. A SEPARATE IRRIGATION PLAN SHALL BE REQUIRED AT THE TIME OF BUILDING PERMIT APPLICATION.
12. FIRE FLOW REQUIREMENTS OF 1,500 GAL PER MINUTE ARE BEING MET BY THIS PLAN.
13. ANY HERITAGE TREE NOTED ON THIS SITE DEVELOPMENT PLAN IS SUBJECT, IN PERPETUITY, TO THE MAINTENANCE, CARE, PRUNING AND REMOVAL REQUIREMENTS OF THE UNIFIED DEVELOPMENT CODE.
14. THE CONSTRUCTION PORTION OF THESE PLANS WERE PREPARED, SEALED, SIGNED AND DATED BY A TEXAS LICENSED PROFESSIONAL ENGINEER. THEREFORE, BASED ON THE ENGINEER'S CONCURRENCE OF COMPLIANCE, THE CONSTRUCTION PLANS FOR CONSTRUCTION OF THE PROPOSED PROJECT ARE HEREBY APPROVED SUBJECT TO THE STANDARD CONSTRUCTION SPECIFICATIONS AND DETAILS MANUAL AND ALL OTHER APPLICABLE CITY, STATE AND FEDERAL REQUIREMENTS AND CODES.
15. THIS PROJECT IS SUBJECT TO ALL CITY STANDARD CONSTRUCTION SPECIFICATIONS AND DETAILS IN EFFECT AT THE TIME OF SUBMITTAL OF THE PROJECT TO THE CITY.
16. ACCORDING TO UDC 13.06.B, FOR ALL NON-RESIDENTIAL AND MULTI-FMAILY DEVELOPMENT WHERE NO EXISTING OVERHEAD INFRASTRUCTURE EXISTS, UNDERGROUND ELECTRIC UTILITY LINES SHALL BE REQUIRED ALONG THE STREET AND WITHIN THE SITE. WHERE EXISTING OVERHEAD INFRASTRUCTURE IS TO BE RELOCATED, IT SHALL BE RE-INSTALLED UNDERGROUND AND THE EXISTING FACILITIES SHALL BE REMOVED AT THE DISCRETION OF THE DEVELOPMENT ENGINEER.
17. ALL ELECTRIC AND COMMUNICATION INFRASTRUCTURE SHALL COMPLY WITH UDC SECTION 13.06.

ADDITIONAL SITE DEVELOPMENT PLAN NOTES

1. TRAFFIC IMPACT ANALYSIS (TIA) REQUIREMENTS HAVE BEEN MET.
2. THE PROPERTY SUBJECT TO THIS APPLICATION IS SUBJECT TO THE WATER QUALITY REGULATIONS OF THE CITY OF GEORGETOWN.
3. A GEOLOGIC ASSESSMENT, IN ACCORDANCE WITH THE CITY OF GEORGETOWN WATER QUALITY REGULATIONS, WAS COMPLETED ON JANUARY 16, 2020. ANY SPRINGS AND STREAMS AS IDENTIFIED IN THE GEOLOGIC ASSESSMENT ARE SHOWN HEREIN.
4. AN ADMINISTRATIVE EXCEPTION FOR AN ALTERNATIVE RESIDENTIAL BOUNDARY WALL DESIGN WAS APPROVED BY THE PLANNING DIRECTOR ON_____ TO ALLOW _____.

APPROVED BY

_____ _____
PLANNING AND ZONING COMMISION DATE

VICINITY MAP

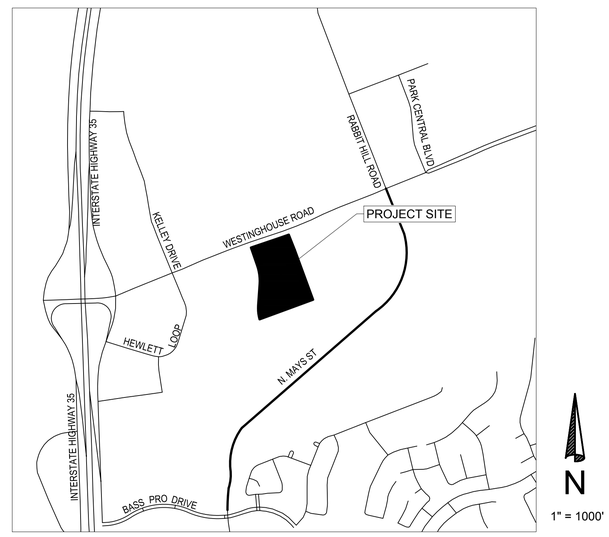

APPLICATION DATE: JULY 20, 2020

NOTE: FOR REVIEW. THIS DOCUMENT IS RELEASED FOR THE PURPOSE OF REVIEW UNDER THE AUTHORITY OF BRIAN J GRACE, P.E. #121846 ON 9/21/2020. IT IS NOT TO BE USED FOR BIDDING, PERMIT, OR CONSTRUCTION.

SUMMIT AT WESTINGHOUSE - TIA TRACKING				PROPOSED TRIPS (UNADJUSTED)			PROPOSED TRIPS (ADJUSTED)[2]		
SITE	USE	CASE #	STATUS	PROPOSED TRIPS (24-HR)	PROPOSED TRIPS (AM PEAK)	PROPOSED TRIPS (PM PEAK)	PROPOSED TRIPS (24-HR)	PROPOSED TRIPS (AM PEAK)	PROPOSED TRIPS (PM PEAK)
ASCEND WESTINGHOUSE	APARTMENT	-	IN REVIEW	1,844	151	183	1,844	143	174
			TOTAL	1,844	151	183	1,844	143	174
			MAX PERMITTED[1]	15,907	928	1,476	14,297	890	1,229
			TRIPS REMAINING	14,063	777	1,293	12,453	747	1,055

[1]MAXIMUM TRIPS ARE PER THE SUMMIT AT WESTINGHOUSE TRAFFIC IMPACT ANALYSIS DATED FEBRUARY 25TH, 2020.
[2]A 5% INTERNATAL CAPTURE RATE WAS UTILIZED IN ACCORDANCE WITH THE ABOVE-REFERENCED TRAFFIC IMPACT ANALYSIS

UTILITY PROVIDERS

WATER: CITY OF GEORGETOWN, (512) 930-3640,
300 INDUSTRIAL AVE, GEORGETOWN, TX 78626
HTTPS://GUS.GEORGETOWN.ORG/
SEWER: CITY OF GEORGETOWN, (512) 930-3640,
300 INDUSTRIAL AVE, GEORGETOWN, TX 78626
HTTPS://GUS.GEORGETOWN.ORG/
ELECTRIC: CITY OF GEORGETOWN, (512) 930-3640,
300 INDUSTRIAL AVE, GEORGETOWN, TX 78626
HTTPS://GUS.GEORGETOWN.ORG/
TELEPHONE: VERIZON (512) 876-2005
1225 S IH 35, STE 101, GEORGETOWN, TX 78626
CABLE: SUDDENLINK BY ALTICE, (844) 874-7558,
4402 WILLIAMS DRIVE, GEORGETOWN, TX 78628
HTTPS://WWW.SUDDENLINK.COM/

STATE OF TEXAS
BRIAN J. GRACE
121846
LICENSED
PROFESSIONAL ENGINEER

SUBMITTED BY

DATE 9/29/2020

BRIAN J. GRACE, P.E.
BGE, INC. TBPE NO. F-1046
1701 DIRECTOR'S BLVD, SUITE 1000
AUSTIN, TEXAS 78744
(512) 879-0400 (MAIN)

REVISIONS/CORRECTIONS

SHEET LIST	DESCRIPTION	DATE	REVISE (R) ADD (A) VOID (V) SHEET NO.'S	ACCEPTED BY	APPROVAL DATE

BGE, Inc.
1701 Directors Blvd, Suite 1000
Austin, TX 78744
Tel: 512-879-0400 ● www.bgeinc.com
TBPE Registration No. F-1046

BENCHMARK

BENCHMARK #1 5/8" IRON ROD SET LOCATED APPROXIMATELY 56 FEET WEST OF THE NORTHEAST CORNER OF THE SUBJECT TRACT, AS HEREON.
ELEVATION: 862.25 FEET NAVD-88

811 Know what's below. Call before you dig.

THE LOCATION OF EXISTING UNDERGROUND UTILITIES ARE SHOWN IN AN APPROXIMATE WAY ONLY. THE CONTRACTOR SHALL DETERMINE THE EXACT LOCATION OF ALL EXISTING UTILITIES BEFORE COMMENCING WORK. HE AGREES TO BE FULLY RESPONSIBLE FOR ANY AND ALL DAMAGES WHICH MIGHT BE OCCASIONED BY HIS FAILURE TO EXACTLY LOCATE AND PRESERVE ANY AND ALL UNDERGROUND UTILITIES.

Sheet List Table

Sheet Number	Sheet Title
1	COVER SHEET
2	GENERAL NOTES
3	FINAL PLAT (1 OF 2)
4	FINAL PLAT (2 OF 2)
5	EXISTING CONDITIONS AND DEMOLITION PLAN
6	DESIGN CONCEPT PERSPECTIVES
7	BUILDING 1 ELEVATIONS
8	BUILDINGS 3 4 5 & 6 ELEVATIONS
9	BUILDINGS 2 & 7 ELEVATIONS (1 OF 2)
10	BUILDINGS 2 & 7 ELEVATIONS (2 OF 2)
11	TRASH COMPACTOR ENCLOSURE DETAILS
12	TRASH ENCLOSURE DETAILS
13	ENLARGED GARAGE PLANS
14	RISERS (1 OF 2)
15	RISERS (2 OF 2)
16	SITE PLAN
17	PHOTOMETRIC PLAN (1 OF 3)
18	PHOTOMETRIC PLAN (2 OF 3)
19	PHOTOMETRIC PLAN (3 OF 3)
20	PLANTING PLAN OVERALL
21	PLANTING PLAN (1 OF 4)
22	PLANTING PLAN (2 OF 4)
23	PLANTING PLAN (3 OF 4)
24	PLANTING PLAN (4 OF 4)
25	PLANTING SCHEDULE AND CALCULATIONS
26	PLANTING DETAILS (1 OF 2)
27	PLANTING PLAN (2 OF 2)
28	LANDSCAPE TREE PRESERVATION PLAN
29	LANDSCAPE SITE DETAILS (1 OF 5)
30	LANDSCAPE SITE DETAILS (2 OF 5)
31	LANDSCAPE SITE DETAILS (3 OF 5)
32	LANDSCAPE SITE DETAILS (4 OF 5)
33	LANDSCAPE SITE DETAILS (5 OF 5)
34	TREE PRESERVATION PLAN
35	EROSION AND SEDIMENTATION CONTROL PLAN (1 OF 2)
36	EROSION AND SEDIMENTATION CONTROL PLAN (2 OF 2)
37	EROSION CONTROL DETAILS
38	OVERALL SITE PLAN
39	SITE PLAN - ENLARGED (1 OF 2)
40	SITE PLAN - ENLARGED (2 OF 2)
41	SITE DETAILS (1 OF 2)
42	SITE DETAILS (2 OF 2)
43	SITE DETAILS (3 OF 3)
44	FIRE PROTECTION SITE PLAN
45	WESTINGHOUSE RD - RIGHT TURN LANE PLAN
46	BOBCAT WAY - COLLECTOR RD PLAN & PROFILE
47	WATER DISTRIBUTION PLAN (1 OF 2)
48	WATER DISTRIBUTION PLAN (2 OF 2)
49	WATER LINE PLAN AND PROFILE BEGIN TO 6+00
50	WATER LINE PLAN AND PROFILE 6+00 TO END
51	OVERALL WASTEWATER PLAN
52	WASTEWATER PLAN AND PROFILE WWL A 1+00 TO 7+00
53	WASTEWATER PLAN AND PROFILE WWL A 7+00 TO END
54	WASTEWATER PLAN AND PROFILE WWL B 1+00 TO 5+00
55	WASTEWATER PLAN AND PROFILE WWL B 5+00 TO END
56	UTILITY DETAILS (1 OF 2)
57	UTILITY DETAILS (2 OF 2)
58	OVERALL STORM SEWER PLAN
59	STORM SEWER PLAN - ENLARGED (1 OF 2)
60	STORM SEWER PLAN - ENLARGED (2 OF 2)
61	OVERALL GRADING PLAN
62	GRADING PLAN - ENLARGED (1 OF 2)
63	GRADING PLAN - ENLARGED (2 OF 2)
64	DRAINAGE AREA MAP AND DRAINAGE CALCULATIONS
65	EXISTING HYDROLOGY PLAN
66	PROPOSED HYDROLOGY PLAN
67	OFF-SITE HYDROLOGY PLAN
68	PERMANENT WATER POLLUTION ABATEMENT PLAN
69	DETENTION & WATER QUALITY POND DETAIL (1 OF 2)
70	DETENTION & WATER QUALITY POND DETAIL (2 OF 2)
71	WATER QUALITY GRASSY SWALE & VEGETATIVE FILTER STRIPS DETAILS
72	DRAINAGE DETAILS (1 OF 2)
73	DRAINAGE DETAILS (2 OF 2)
74	TRAFFIC CONTROL PLAN
75	TRAFFIC CONTROL DETAILS (1 OF 2)
76	TRAFFIC CONTRL DETAILS (2 OF 2)

ADDRESS: 500 WESTINGHOUSE ROAD

ASCEND WESTINGHOUSE
500 WESTINGHOUSE RD
2020-41-SDP

GENERAL NOTES

1. THESE CONSTRUCTION PLANS WERE PREPARED, SEALED AND DATED BY A TEXAS LICENSED PROFESSIONAL ENGINEER. THEREFORE BASED ON THE ENGINEER'S CONCURRENCE OF COMPLIANCE, THE CONSTRUCTION PLANS FOR CONSTRUCTION OF THE PROPOSED PROJECT ARE HEREBY APPROVED SUBJECT TO THE STANDARD CONSTRUCTION SPECIFICATIONS AND DETAILS MANUAL AND ALL OTHER APPLICABLE CITY, STATE AND FEDERAL REQUIREMENTS AND CODES.
2. THIS PROJECT IS SUBJECT TO ALL CITY STANDARD SPECIFICATIONS AND DETAILS IN EFFECT AT THE TIME OF SUBMITTAL OF THE PROJECT OF THE CITY.
3. THE SITE CONSTRUCTION PLANS SHALL MEET ALL REQUIREMENTS OF THE APPROVED SITE PLAN.
4. WASTEWATER MAINS AND SERVICE LINES SHALL BE SDR 26 PVC.
5. WASTEWATER MAINS SHALL BE INSTALLED WITHOUT HORIZONTAL OR VERTICAL BENDS.
6. MAXIMUM DISTANCE BETWEEN WASTEWATER MANHOLES IS 500 FEET.
7. WASTEWATER MAINS SHAFT BE LOW PRESSURE AIR TESTED AND MANDREL TESTED BY THE CONTRACTOR ACCORDING TO CITY OF GEORGETOWN AND TCEQ REQUIREMENTS.
8. WASTEWATER MANHOLES SHALL BE VACUUM TESTED AND COATED BY THE CONTRACTOR ACCORDING TO CITY OF GEORGETOWN AND TCEQ REQUIREMENTS.
9. WASTEWATER MAINS SHALL BE CAMERA TESTED BY THE CONTRACTOR AND SUBMITTED TO THE CITY ON DVD FORMAT PRIOR TO PAVING THE STREETS.
10. PRIVATE WATER SYSTEM FIRE FINES SHAFT BE TESTED BY THE CONTRACTOR TO 200 PSI FOR 2 HOURS.
11. PRIVATE WATER SYSTEM FIRE LINES SHALL BE DUCTILE IRON PIPING FROM THE WATER MAIN TO THE BUILDING SPRINKLER SYSTEM, AND 200 PSI C900 PVC FOR ALL OTHERS.
12. PUBLIC WATER SYSTEM MAINS SHALL BE 150 PSI C900 PVC AND TESTED BY THE CONTRACTOR AT 150 PSI FOR, 4 HOURS.
13. ALL BENDS AND CHANGES IN DIRECTION ON WATER MAINS SHALL BE RESTRAINED AND THRUST BLOCKED.
14. LONG FIRE HYDRANT LEADS SHAFT BE RESTRAINED.
15. ALL WATERLINES ARE TO BE BACTERIA TESTED BY THE CONTRACTOR ACCORDING TO THE CITY STANDARDS AND SPECIFICATIONS.
16. WATER AND SEWER MAIN CROSSINGS SHALL MEET ALL REQUIREMENTS OF THE TCEQ AND THE CITY.
17. FLEXIBLE BASE MATERIAL FOR PUBLIC STREETS SHAFT BE TXDOT TYPE A GRADE 1.
18. HOT MIX ASPHALTIC CONCRETE PAVEMENT SHALL BE TYPE D UNLESS OTHERWISE SPECIFIED AND SHALL BE A MINIMUM OF 2 INCHES THICK ON PUBLIC STREETS AND ROADWAYS.
19. ALL SIDEWALK RAMPS ARE TO BE INSTALLED WITH THE PUBLIC INFRASTRUCTURE.
20. A MAINTENANCE BOND IS REQUIRED TO BE SUBMITTED TO THE CITY PRIOR TO ACCEPTANCE OF THE PUBLIC IMPROVEMENTS. THIS BOND SHALL BE ESTABLISHED FOR 1 YEAR IN THE AMOUNT OF 25% OF THE COST OF THE PUBLIC IMPROVEMENTS AND SHALL FOLLOW THE CITY FORMAT.
21. RECORD DRAWINGS OF THE PUBLIC IMPROVEMENTS SHAFT BE SUBMITTED TO THE CITY BY THE DESIGN ENGINEER PRIOR TO ACCEPTANCE OF THE PROJECT. THESE DRAWINGS SHALL BE ON MYLAR OR ON TIFF OR PDF (300P DPI). IF A DISK IS SUBMITTED, A BOND SET SHALL BE INCLUDED WITH THE DISK.

ADJUSTED FIRE FLOW TEST RESULTS:

RESIDUAL HYDRANT ID NUMBER:**100084280**
FLOW HYDRANT ID NUMBER:**100084279**
WATER MAIN SIZE: **16"**
ADJUSTED STATIC PRESSURE PSI: **51 PSI**
ADJUSTED RESIDUAL PRESSURE PSI: **46 PSI**
ADJUSTED FLOW AT 20PSI: **3,866 GPM**

FIRE PROTECTION NOTES

1. APPROVAL OF THIS SITE PLAN DOES NOT IMPLY APPROVAL TO INSTALL UNDERGROUND FIRE LINES. PRIOR TO INSTALLATION OF UNDERGROUND FIRE LINES, A SEPARATE PERMIT SHALL BE SUBMITTED, UNDER GROUND FIRE LINE SUPPLY.
2. BACKFLOW PROTECTION WILL BE PROVIDED IN ACCORDANCE WITH THE CITY OF GEORGETOWN REQUIREMENTS WHEN REQUIRED. BACKFLOW PROTECTION WILL BE INSTALLED IN ACCORDANCE WITH THE DETAIL PROVIDED IN THE UTILITY DRAWINGS.
3. ALL PRIVATE FIRE LINES AND WHAT THEY PROVIDE SERVICE TO WILL BE INSTALLED IN ACCORDANCE WITH NFPA 24 INSTULLATION OF PRIVATE SERVICE MAINS AND THEIR APPURTENANCES.
4. ALL TEES, PLUGS, CAPS, BENDS, REDUCERS, VALVES SHALL BE RESTRAINED AGAINST MOVEMENT. THRUST BLOCKING AND JOINT RESTRAINED WILL BE INSTALLED IN ACCORDANCE WITH NFPA 24.
5. ALL UNDERGROUND SHALL REMAIN UNCOVERED UNTIL A VISUAL INSPECTION IS CONDUCTED BY THE GEORGETOWN FIRE MARSHAL'S OFFICE (FMO). ALL JOINT RESTRAINTS AND THRUST BLOCKING SHALL BE UNCOVERED FOR VISUAL INSPECTION.
6. ALL UNDERGROUND SHALL BE FLUSHED PER THE REQUIREMENTS OF NFPA STANDARD 24 AND WITNESSED BY GEORGETOWN FMO.
7. ALL UNDERGROUND SHALL PASS A HYDROSTATIC TEST WITNESSED BY GEORGETOWN FMO. ALL JOINTS SHALL BE UNCOVERED FOR HYDROSTATIC TESTING. ALL PIPING AND ATTACHMENTS SUBJECTED TO SYSTEM WORKING PRESSURE SHALL BE TESTED AT 200 PSI. OR 50 PSI IN EXCESS OF THE SYSTEM WORKING PRESSURE, WHICHEVER IS GREATER, AND SHALL MAINTAIN THAT PRESSURE + OR - 5 PSI FOR 2 HOURS.
8. FENCES, LANDSCAPING AND OTHER ITEMS WILL NOT BE INSTALLED WITHIN 3 FT, AND WHERE THEY WILL OBSTRUCT THE VISIBILITY OR ACCESS TO HYDRANTS, OR REMOTE FDCS.
9. LICENSE REQUIREMENTS OF EITHER RME-U OR G. WHEN CONNECTING BY UNDERGROUND TO THE WATER PURVEYOR'S MAIN FROM THE POINT OF CONNECTION OR VALVE WHERE THE PRIMARY PURPOSE OF WATER IS FOR FIRE PROTECTION SPRINKLER SYSTEM.

Georgetown Fire Department
3500 DB Wood
Georgetown, Texas 78628
512-930-3473
Fax: 512-450-3897

Water Flow Test Report

LOCATION	500 Westinghouse	TEST DATE:	4/20/2020
TEST BY:	Rangeland Services	TIME OF DAY:	2:00 PM
WATER SUPPLIED BY:	City of Georgetown		
PURPOSE OF TEST:	Fire flow	MAIN SIZE:	

DATA

FLOW HYDRANT(S)	A1	A2	A3
SIZE OPENING:	2.5	2.5	2.5
COEFFICIENT:	0.9	0.9	0.9
PITOT READING:	74	0	0
GPM:	**1443**	0	0

TOTAL FLOW DURING TEST: **1443** GPM

TOWER LEVEL @ TIME OF TEST: 143.3 TOWER LOW 120.65
STATIC READING: 60 PSI RESIDUAL: 55 PSI

ADJ. STATIC: 51 PSI AJD. RESIDUAL: 46 PSI
ADJ. FLOW: AT 20 PSI RESIDUAL 3866 GPM AT 0 PSI 5059 GPM

Please be advised that the Georgetown Fire Marshal's Office requires that all fire protection plan submittals be accompanied the waterflow (fire hydrant flow) test information. This report must be included with plan submittal. The Fire Sprinkler Contractor must design the applicable fire sprinkler system, based on the minimum water supply available, in accordance with the requirements of NFPA 13. Please also note that the 10-psi safety factor required by Section 903.3.5 of the Fire Code still applies to the fire protection system design.

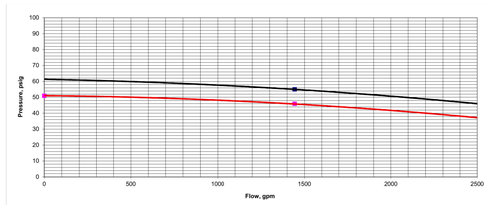

THE LOCATION OF EXISTING UNDERGROUND UTILITIES ARE SHOWN IN AN APPROXIMATE WAY ONLY. THE CONTRACTOR SHALL DETERMINE THE EXACT LOCATIONS OF ALL EXISTING UTILITIES BEFORE COMMENCING WORK. HE AGREES TO BE FULLY RESPONSIBLE FOR ANY AND ALL DAMAGES WHICH MIGHT BE OCCASIONED BY HIS FAILURE TO EXACTLY LOCATE ADN PRESERVE ANY AND ALL UNDERGROUND UTILITIES.

811 Know what's below. Call before you dig.

ADDRESS: 500 WESTINGHOUSE ROAD

REV	DESCRIPTION	DATE	APR

DESIGNED BY: JG
REVIEWED BY: BG
DRAWN BY: JG

BGE
BROWN & GAY ENGINEERS, INC.
1701 DIRECTORS BLVD, SUITE 1000
AUSTIN, TX 78731
TBPE Registration No. F-1046
TEL: 512-879-0400 www.brownggy.com

500 WESTINGHOUSE ROAD

ASCEND WESTINGHOUSE
GEORGETOWN, TEXAS

GENERAL NOTES

STATE OF TEXAS
BRIAN J. GRACE
121846
LICENSED PROFESSIONAL ENGINEER
9/21/2020

2020-41-SDP

SHEET
2 OF 76

G:\TXC\Projects\DHI_Communities\7616-00-Westinghouse\LD\01_CADD\01_Shts\02_Site Plan\7616-C-SP-GENERAL NOTES.dwg Layout: GENERAL NOTES Plotted: 9/21/2020 9:42:35 AM

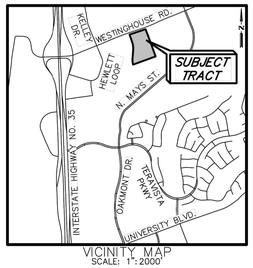

VICINITY MAP
SCALE: 1": 2000'

LEGAL DESCRIPTION:

FIELD NOTES FOR A 15.536 ACRE TRACT OF LAND OUT OF THE BARNEY C. LOW SURVEY, ABSTRACT NO. 385, WILLIAMSON COUNTY, TEXAS; BEING A PORTION OF A CALLED 76.27156 ACRE TRACT OF LAND DESCRIBED AS TRACT ONE, AS CONVEYED TO NOVAK WESTINGHOUSE, LP BY SPECIAL WARRANTY DEED WITH VENDOR'S LIEN RECORDED IN DOCUMENT NUMBER 2014073967 OF THE OFFICIAL PUBLIC RECORDS OF WILLIAMSON COUNTY, TEXAS, SAVE AND EXCEPT THE CALLED 0.903 ACRE TRACT AND THE CALLED 0.014 ACRE TRACT CONVEYED TO WILLIAMSON COUNTY, TEXAS, IN THE DONATION SPECIAL WARRANTY DEED RECORDED IN DOCUMENT NO. 2008059372 OF THE OFFICIAL PUBLIC RECORDS OF WILLIAMSON COUNTY, TEXAS; SAID 14.500 ACRE TRACT OF LAND BEING MORE PARTICULARLY DESCRIBED BY METES AND BOUNDS AS FOLLOWS:

BEGINNING at a Mag Nail found on the southerly right-of-way line of Westinghouse Road (variable width public right-of-way) at the northwest corner of a called 13.10 acre tract of land as conveyed to 600 Westinghouse, LLC by Special Warranty Deed recorded in Document No. 2019098806 of the Official Public Records of Williamson County, Texas, at the southeast corner of said Williamson County, Texas, 0.903 acre right-of-way tract, at the northeast corner of the remaining portion of said Novak Westinghouse 76.27156 acre tract, for the northeast corner and POINT OF BEGINNING of the herein described tract of land;

THENCE, with the west line of said 13.10 acre tract, the following two (2) courses:

1) S 21°21'07" E a distance of 230.63 to a 1/2-inch iron rod with cap stamped "FOREST RPLS 1847" found for an angle point; and

2) S 19°59'20" E a distance of 208.02 feet to a 1/2-inch iron rod found for the southwest corner of said 13.10 acre tract and the most westerly corner of a called 94.387 acre tract of land as conveyed to Horizontal Westinghouse Investors, LP, by Special Warranty Deed recorded in Document No. 2015005809 of the Official Public Records of Williamson County, Texas;

THENCE, with the west line of said 94.387 acre tract, S 20°02'57" E a distance of 531.93 feet to a 1/2-inch iron rod with cap stamped "BGE INC" set for the southeast corner of the herein described tract, from which a 1/2-inch iron rod found at the southeast corner of said Novak Westinghouse 76.27156 acre tract bears S 20°02'57" E a distance of 1,727.57 feet;

THENCE, departing said west line of said 94.387 acre tract, over and across said 76.27156 acre tract, S 69°58'14" W a distance of 841.93 feet to a 1/2-inch iron rod with cap stamped "BGE INC" set for the southwest corner of the herein described tract;

THENCE, along a curve to the right, an arc distance of 216.21 feet, having a radius of 632.08 feet, a central angle of 19°35'55" and a chord which bears N 05°39'23" W, a distance of 215.16 feet to a 1/2-inch iron rod with cap stamped "BGE INC" set for corner;

THENCE N 04°08'36" E a distance of 295.68 feet to a 1/2-inch iron rod with cap stamped "BGE INC" set at the point of curvature of a curve to the left;

THENCE, along said curve to the left, an arc distance of 249.52 feet, having a radius of 618.07 feet, a central angle of 23°07'50" and a chord which bears N 07°25'20" W, a distance of 247.83 feet to a 1/2-inch iron rod with cap stamped "BGE INC" set for corner;

THENCE N 18°59'15" W a distance of 264.79 feet to a 1/2-inch iron rod with cap stamped "BGE INC" set on the southerly right-of-way line of said Westinghouse Road for the northwest corner of the herein described tract, from which a 1/2-inch iron rod with cap stamped "FOREST RPLS 1847" bears S 71°26'42" W a distance of 4.42 feet and S 73°32'51" W a distance of 27.86 feet;

THENCE, with said southerly right-of-way line of said Westinghouse Road and the north line of said Novak Westinghouse remainder tract, the following two (2) courses:

1) N 71°26'42" E a distance of 451.53 feet to a 1/2-inch iron rod with cap stamped "FOREST RPLS 1847" found at the beginning of a non-tangent curve to the left; and

2) Along said curve to the left, an arc distance of 107.81 feet, having a radius of 5060.00 feet, a central angle of 01°13'15" and a chord which bears N 70°46'16" E, a distance of 107.81 feet to the POINT OF BEGINNING and containing 15.536 acres of land, more or less.

STREET TABLE					
STREET	STREET CLASSIFICATION	R.O.W. WIDTH	CENTERLINE LENGTH	PAVEMENT WIDTH	DESIGN SPEED
BOBCAT WAY	COLLECTOR	44 FT.	1,026 FT.	22 FT. EDGE OF GUTTER TO EDGE OF GUTTER	30 M.P.H.

OWNER: NOVAK WESTINGHOUSE, LP
ADDRESS: 204 ADAMS STREET
GEORGETOWN, WILLIAMSON COUNTY, TEXAS 78628
(806)-368-6298

ACREAGE: 15.536 ACRES
SURVEY: BARNEY C LOW. SURVEY, ABSTRACT 385

NUMBER AND ACREAGE BY LOT/BLOCK TYPE: TOTAL LOTS: 1-MULTIFAMILY LOT (14.438 ACRES)
TOTAL BLOCKS: 1

ENGINEERING BY: BRIAN GRACE, P.E.
LICENSED PROFESSIONAL ENGINEER NO. 121846
1701 DIRECTORS BLVD, SUITE 1000
AUSTIN, TX 78744
BGE, INC.

SURVEYING BY: JONATHAN NOBLES, R.P.L.S.
REGISTERED PROFESSIONAL LAND SURVEYOR NO. 5777
101 WEST LOUIS HENNA BLVD., SUITE 400
AUSTIN, TEXAS 78728
BGE, INC.

SUBMITTAL DATE: MARCH 23, 2020

SHEET INDEX:

SHEET 1 – COVER
SHEET 2 – PLAT
SHEET 3 – NOTES AND SIGNATURE BLOCKS

BEARING ORIENTATION IS BASED ON THE TEXAS STATE PLANE COORDINATE SYSTEM, CENTRAL ZONE 4203, NAD83. ALL DISTANCES SHOWN HEREON ARE IN SURFACE AND CAN BE CONVERTED TO GRID BY USING THE COMBINED SCALE FACTOR = 1.00012724338.

FINAL PLAT
ASCEND WESTINGHOUSE

A SUBDIVISION OF 15.536 ACRES OF LAND
LOCATED IN THE
BARNEY C. LOW SURVEY
ABSTRACT NO. 385
CITY OF GEORGETOWN
WILLIAMSON COUNTY, TEXAS

BGE, Inc.
101 West Louis Henna Blvd., Suite 400
Austin, Texas 78728
Tel: 512-879-0400 • www.bgeinc.com
TBPELS Registration No. F-1046
TBPELS Licensed Surveying Firm No. 10106502

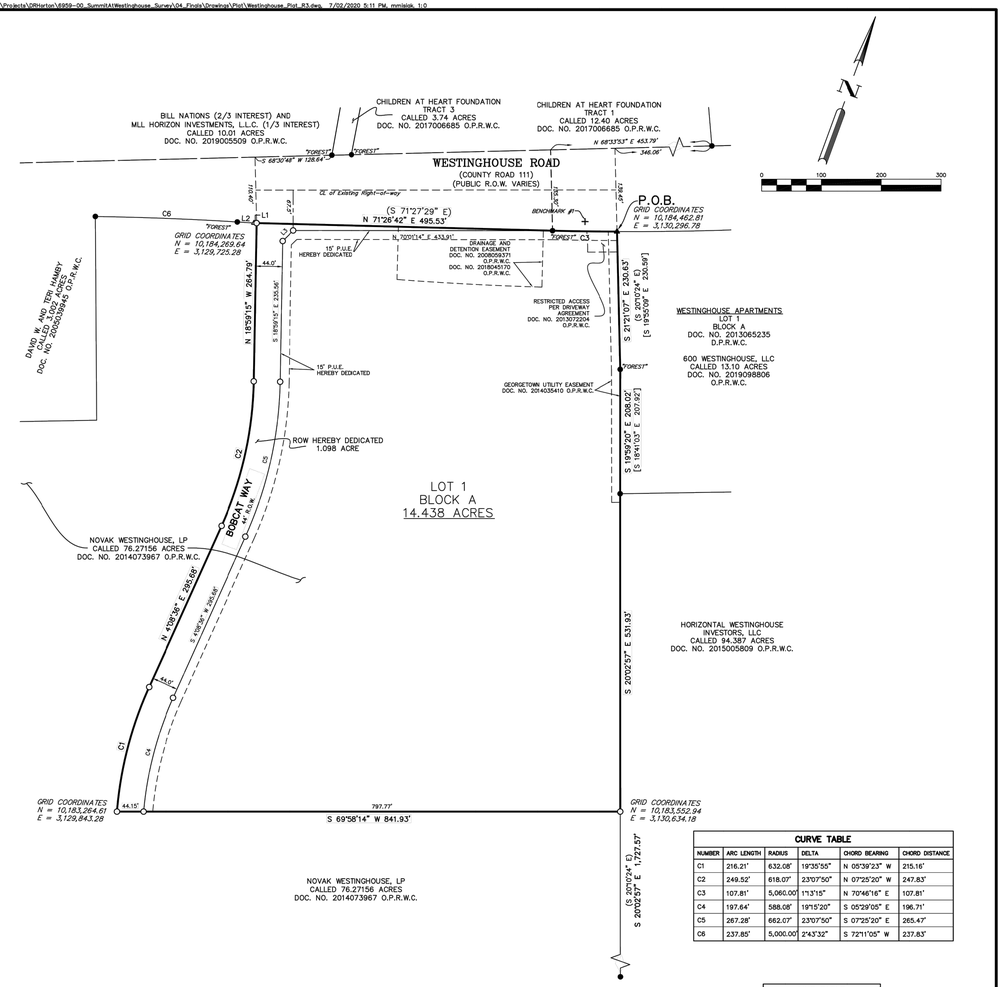

CURVE TABLE					
NUMBER	ARC LENGTH	RADIUS	DELTA	CHORD BEARING	CHORD DISTANCE
C1	216.21'	632.08'	19°35'55"	N 05°39'23" W	215.16'
C2	249.52'	618.07'	23°07'50"	N 07°25'20" W	247.83'
C3	107.81'	5,060.00'	1°13'15"	N 70°46'16" E	107.81'
C4	197.64'	588.08'	19°15'20"	S 05°29'05" E	196.71'
C5	267.28'	662.07'	23°07'50"	S 07°25'20" E	265.47'
C6	237.85'	5,000.00'	2°43'32"	S 72°11'05" W	237.83'

LINE TABLE		
NUMBER	BEARING	DISTANCE
L1	S 71°26'42" W	4.42'
L2	S 73°32'51" W	27.86'
L3	S 25°31'00" W	25.22'

TEMPORARY BENCHMARK NOTE:

BENCHMARK #1 5/8" IRON ROD SET LOCATED APPROXIMATELY 56 FEET WEST OF THE NORTHEAST CORNER OF THE SUBJECT TRACT, AS SHOWN HEREON.

ELEVATION: 862.25 FEET NAVD-88

LEGEND

DOC.	DOCUMENT
D.P.R.W.C.	DEED AND PLAT RECORD OF WILLIAMSON COUNTY
FND.	FOUND
I.	IRON
NO.	NUMBER
O.P.R.W.C.	OFFICIAL PUBLIC RECORDS OF WILLIAMSON COUNTY
P.O.B.	POINT OF BEGINNING
R.O.W.	RIGHT-OF-WAY
( )	RECORD INFO. DOC. NO. 2014073967 O.P.R.W.C.
[ ]	RECORD INFO. DOC. NO. 2013067166 O.P.R.W.C.
▲	MAG NAIL FOUND
●	1/2" IRON ROD FOUND
"FOREST" ●	1/2" IRON ROD FOUND W/ CAP "FOREST RPLS 1847"
○	1/2" IRON ROD SET W/ CAP "BGE INC"
△	CALCULATED POINT
+	TEMPORARY BENCHMARK
	SCALE BREAK SYMBOL

FINAL PLAT
ASCEND WESTINGHOUSE

A SUBDIVISION OF 15.536 ACRES OF LAND
LOCATED IN THE
BARNEY C. LOW SURVEY
ABSTRACT NO. 385
CITY OF GEORGETOWN
WILLIAMSON COUNTY, TEXAS

BGE, Inc.
101 West Louis Henna Blvd., Suite 400
Austin, Texas 78728
Tel: 512-879-0400 • www.bgeinc.com
TBPELS Registration No. F-1046
TBPELS Licensed Surveying Firm No. 10106502

ADDRESS: 500 WESTINGHOUSE ROAD

REV	DESCRIPTION	DATE	APR

DESIGNED BY: JG
REVIEWED BY: BG
DRAWN BY: JG

BROWN & GAY ENGINEERS, INC.
1701 DIRECTORS BLVD, SUITE 1000
AUSTIN, TX 78731
TBPE Registration No. F-1046
TEL: 512-879-0400 www.brownglay.com

ASCEND WESTINGHOUSE
GEORGETOWN, TEXAS

FINAL PLAT (1 OF 2)

500 WESTINGHOUSE ROAD

2020-41-SDP

G:\TXC\Projects\DHI_Communities\7616-00-Westinghouse\LD\01_CADD\01_Shts\02_Site Plan\7616-C-SP-PLAT.dwg Layout: FINAL PLAT (1 OF 2) Plotted: 9/21/2020 9:42:45 AM

STATE OF TEXAS §
KNOW ALL MEN BY THESE PRESENTS:
COUNTY OF WILLIAMSON §

THAT NOVAK WESTINGHOUSE, LP, ACTING HEREIN BY AND THROUGH JEFFREY L. NOVAK, SOLE OWNER OF THE CERTAIN 76.27156 ACRE TRACT OF LAND OUT OF THE BARNEY C. LOW SURVEY, ABSTRACT 385 SITUATED IN WILLIAMSON COUNTY, TEXAS, SHOWN HEREON AND DESCRIBED IN A SPECIAL WARRANTY DEED WITH VENDOR'S LIEN RECORDED IN DOCUMENT NUMBER 2014073967 OF THE OFFICIAL PUBLIC RECORDS OF WILLIAMSON COUNTY, TEXAS, DO HEREBY SUBDIVIDE 15.536 ACRES OF LAND AS SHOWN HEREON; DO HEREBY COVENANT TO ALL RESTRICTIONS LISTED HEREIN, WHICH SHALL RUN WITH THE LAND; AND DO HEREBY DEDICATE TO THE CITY OF GEORGETOWN THE STREETS, ALLEYS, RIGHTS-OF-WAY, EASEMENTS AND PUBLIC PLACES SHOWN HEREON FOR SUCH PUBLIC PURPOSES AS THE CITY OF GEORGETOWN MAY DEEM APPROPRIATE. I HEREBY BIND MY HEIRS, SUCCESSORS, AND ASSIGNS TO WARRANT AND FOREVER DEFEND SUCH DEDICATIONS, ALL AND SINGULAR, TO THE CITY OF GEORGETOWN AGAINST EVERY PERSON WHOMSOEVER CLAIMING OR TO CLAIM THE SAME OR ANY PART THEREOF. THIS SUBDIVISION IS TO BE KNOWN AS:

ASCEND WESTINGHOUSE

TO CERTIFY WHICH, WITNESS BY MY HAND, THIS THE _____ DAY OF _____, 20___, A.D.

BY: NOVAK WESTINGHOUSE, LP

_____
JEFFREY L. NOVAK, MANAGER
1500 RIVERY BLVD., SUITE 2200
GEORGETOWN, TX 78628

STATE OF TEXAS §
KNOW ALL MEN BY THESE PRESENTS
COUNTY OF WILLIAMSON §

BEFORE ME, THE UNDERSIGNED, A NOTARY PUBLIC IN AND FOR SAID COUNTY AND STATE, ON THIS DAY, PERSONALLY APPEARED JEFFREY L. NOVAK, OWNER, KNOWN TO ME TO BE THE PERSON WHOSE NAME IS SUBSCRIBED TO THE FOREGOING INSTRUMENT.

GIVEN UNDER MY HAND AND SEAL OF OFFICE THIS THE _____ DAY OF _____, 20___, AD.

_____
NOTARY PUBLIC IN AND FOR THE STATE OF TEXAS
MY COMMISSION EXPIRES _____

STATE OF TEXAS §
KNOW ALL MEN BY THESE PRESENTS:
COUNTY OF WILLIAMSON §

THAT VISTA BANK, ACTING HEREIN BY AND THROUGH BRIAN PIERCE, SENIOR VICE PRESIDENT AND LIEN HOLDER OF THE CERTAIN 76.27156 ACRE TRACT OF LAND OUT OF THE BARNEY C. LOW SURVEY, ABSTRACT 385 SITUATED IN WILLIAMSON COUNTY, TEXAS, SHOWN HEREON AND DESCRIBED IN A SPECIAL WARRANTY DEED WITH VENDOR'S LIEN RECORDED IN DOCUMENT NUMBER 2014073967, AS AFFECTED BY DOCUMENT NUMBERS 2019051590 AND 2019065920, ALL OF THE OFFICIAL PUBLIC RECORDS OF WILLIAMSON COUNTY, TEXAS, DO HEREBY CONSENT TO THE SUBDIVISION OF SAID TRACT AS SHOWN HEREON; DO FURTHER HEREBY JOIN, APPROVE AND COVENANT TO ALL RESTRICTIONS LISTED HEREIN; AND DO HEREBY DEDICATE TO THE CITY OF GEORGETOWN THE STREETS, ALLEYS, RIGHTS-OF-WAY, EASEMENTS AND PUBLIC PLACES SHOWN HEREON FOR SUCH PUBLIC PURPOSES AS THE CITY OF GEORGETOWN MAY DEEM APPROPRIATE. THIS SUBDIVISION IS TO BE KNOWN AS:

ASCEND WESTINGHOUSE

TO CERTIFY WHICH, WITNESS MY HAND, THIS THE _____ DAY OF _____, 20___, A.D.

BY: VISTA BANK

_____
BRIAN PIERCE, SENIOR VICE PRESIDENT
5621 50TH STREET, LUBBOCK, TEXAS 79414

STATE OF TEXAS §
KNOW ALL MEN BY THESE PRESENTS
COUNTY OF WILLIAMSON §

BEFORE ME, THE UNDERSIGNED, A NOTARY PUBLIC IN AND FOR SAID COUNTY AND STATE, ON THIS DAY PERSONALLY APPEARED BRIAN PIERCE, SENIOR VICE PRESIDENT, TRUSTEE, KNOWN TO ME TO BE THE PERSON WHOSE NAME IS SUBSCRIBED TO THE FOREGOING INSTRUMENT.

GIVEN UNDER MY HAND AND SEAL OF OFFICE, THIS THE _____ DAY OF _____, 20___, AD.

_____
NOTARY PUBLIC IN AND FOR THE STATE OF TEXAS
MY COMMISSION EXPIRES _____

ENGINEERS CERTIFICATION

I, BRIAN GRACE, REGISTERED PROFESSIONAL ENGINEER IN THE STATE OF TEXAS, DO HEREBY CERTIFY THAT THIS SUBDIVISION IS IN THE EDWARDS AQUIFER RECHARGE ZONE AND IS NOT ENCROACHED BY A ZONE A FLOOD AREA, AS DENOTED HEREIN, AND AS DEFINED BY FEDERAL EMERGENCY MANAGEMENT ADMINISTRATION FLOOD HAZARD BOUNDARY MAP, COMMUNITY PANEL NUMBER 48491C0485E EFFECTIVE DATE SEPTEMBER 26, 2008, AND THAT EACH LOT CONFORMS TO THE CITY OF GEORGETOWN REGULATIONS.

THE FULLY DEVELOPED, CONCENTRATED STORMWATER RUNOFF RESULTING FROM THE ONE HUNDRED (100) YEAR FREQUENCY STORM IS CONTAINED WITHIN THE DRAINAGE EASEMENTS SHOWN AND/OR PUBLIC RIGHTS-OF-WAY DEDICATED BY THIS PLAT.

TO CERTIFY WHICH, WITNESS MY HAND AND SEAL AT AUSTIN, WILLIAMSON COUNTY, TEXAS, THIS 6TH DAY OF JULY, 2020

7/9/2020

BRIAN GRACE
REGISTERED PROFESSIONAL ENGINEER
NO. 121846 STATE OF TEXAS

STATE OF TEXAS
BRIAN J. GRACE
121846
LICENSED
PROFESSIONAL ENGINEER

SURVEYORS CERTIFICATION:
STATE OF TEXAS §
KNOW ALL MEN BY THESE PRESENTS
COUNTY OF WILLIAMSON §

I, JONATHAN NOBLES, REGISTERED PROFESSIONAL LAND SURVEYOR IN THE STATE OF TEXAS, DO HEREBY CERTIFY THAT THIS PLAT IS TRUE AND CORRECTLY MADE FROM AN ACTUAL SURVEY MADE ON THE GROUND OF THE PROPERTY LEGALLY DESCRIBED HEREON, AND THAT THERE ARE NO APPARENT DISCREPANCIES, CONFLICTS, OVERLAPPING OF IMPROVEMENTS, VISIBLE UTILITY LINES OR ROADS IN PLACE, EXCEPT AS SHOWN ON THE ACCOMPANYING PLAT, AND THAT THE CORNER MONUMENTS SHOWN THEREON WERE PROPERLY PLACED UNDER MY SUPERVISION IN ACCORDANCE WITH THE SUBDIVISION REGULATIONS OF THE CITY OF GEORGETOWN, TEXAS.

TO CERTIFY WHICH, WITNESS MY HAND AND SEAL AT AUSTIN, WILLIAMSON COUNTY, TEXAS, THIS ____ DAY OF _____, 20___.

PRELIMINARY, THIS DOCUMENT SHALL NOT BE RECORDED FOR ANY PURPOSE AND SHALL NOT BE USED OR VIEWED OR RELIED UPON AS A FINAL SURVEY DOCUMENT

_____
JONATHAN NOBLES
REGISTERED PROFESSIONAL SURVEYOR
NO. 5777 STATE OF TEXAS

FINAL PLAT
ASCEND WESTINGHOUSE

A SUBDIVISION OF 15.536 ACRES OF LAND
LOCATED IN THE
BARNEY C. LOW SURVEY
ABSTRACT NO. 385
CITY OF GEORGETOWN
WILLIAMSON COUNTY, TEXAS

GENERAL NOTES:

1. THE SUBJECT PROPERTY LIES IN UNSHADED ZONE "X" (AREAS DETERMINED TO BE OUTSIDE THE 0.2% ANNUAL CHANCE FLOODPLAIN) AND THERE ARE NO AREAS WITHIN THE BOUNDARIES OF THIS SUBDIVISION IN THE 100-YEAR FLOODPLAIN AS DELINEATED ON THE FLOOD INSURANCE RATE MAP FOR TRAVIS COUNTY, TEXAS, AND INCORPORATED AREAS, MAP NUMBER 48491C0485E, REVISED DATE SEPTEMBER 26, 2008.
2. PARKLAND DEDICATION REQUIREMENTS ARE BEING MET BY FEE-IN-LIEU.
3. THE BUILDING OF ALL STREETS, ROADS, AND OTHER PUBLIC THOROUGHFARES AND ANY BRIDGES OR CULVERTS NECESSARY TO BE CONSTRUCTED OR PLACED IS THE RESPONSIBILITY OF THE OWNERS OF THE TRACT OF LAND COVERED BY THIS PLAT IN ACCORDANCE WITH THE PLANS AND SPECIFICATIONS PRESCRIBED BY THE CITY OF GEORGETOWN AND/OR WILLIAMSON COUNTY, TEXAS. NEITHER THE CITY OF GEORGETOWN NOR WILLIAMSON COUNTY ASSUMES ANY OBLIGATION TO BUILD ANY OF THE STREETS, ROADS, OR OTHER PUBLIC THOROUGHFARES SHOWN ON THIS PLAT OR OF CONSTRUCTING ANY OF THE BRIDGES OR DRAINAGE IMPROVEMENTS IN CONNECTION THEREWITH. NEITHER THE CITY OF GEORGETOWN NOR WILLIAMSON COUNTY ASSUMES ANY RESPONSIBILITY FOR DRAINAGE WAYS OR EASEMENTS IN THE SUBDIVISION, OTHER THAN THOSE DRAINING OR PROTECTING THE ROAD SYSTEM AND STREETS IN THEIR RESPECTIVE JURISDICTIONS.
4. RIGHT-OF-WAY EASEMENTS FOR WIDENING ROADWAYS OR IMPROVING DRAINAGE SHALL BE MAINTAINED BY THE LANDOWNER UNTIL ROAD OR DRAINAGE IMPROVEMENTS ARE ACTUALLY CONSTRUCTED ON THE PROPERTY. THE CITY AND/OR COUNTY HAVE THE RIGHT AT ANY TIME TO TAKE POSSESSION OF ANY ROAD WIDENING EASEMENT FOR CONSTRUCTION, IMPROVEMENT, OR MAINTENANCE OF THE ADJACENT ROAD.
5. THE SUBDIVISION SUBJECT TO THIS APPLICATION IS SUBJECT TO THE WATER QUALITY REGULATIONS OF THE CITY OF GEORGETOWN. (FOR PROPERTIES OVER THE EDWARDS AQUIFER RECHARGE ZONE).
6. UTILITY PROVIDERS FOR THIS DEVELOPMENT ARE WATER: CITY OF GEORGETOWN, WASTEWATER: CITY OF GEORGETOWN, ELECTRIC: CITY OF GEORGETOWN
7. A 15-FOOT PUBLIC UTILITY EASEMENT IS RESERVED ALONG ALL STREET FRONTAGES WITHIN THIS PLAT.
8. NEITHER THE CITY OF GEORGETOWN NOR WILLIAMSON COUNTY ASSUMES ANY RESPONSIBILITY FOR THE ACCURACY OF REPRESENTATIONS BY OTHER PARTIES IN THIS PLAT. FLOODPLAIN DATA, IN PARTICULAR, MAY CHANGE DEPENDING ON SUBSEQUENT DEVELOPMENT. IT IS FURTHER UNDERSTOOD THAT THE OWNERS OF THE TRACT OF LAND COVERED BY THIS PLAT MUST INSTALL AT THEIR OWN EXPENSE ALL TRAFFIC CONTROL DEVICES AND SIGNAGE THAT MAY BE REQUIRED BEFORE THE STREETS IN THE SUBDIVISION HAVE FINALLY BEEN ACCEPTED FOR MAINTENANCE BY THE CITY AND/OR COUNTY.
9. THIS PLAT IS SUBJECT TO THE PROVISIONS OF THE CITY OF GEORGETOWN WATER CONSERVATION ORDINANCE.
10. THIS PROJECT IS LOCATED IN THE CITY OF GEORGETOWN.
11. ALL STRUCTURES/OBSTRUCTIONS ARE PROHIBITED IN DRAINAGE EASEMENTS.
12. IN ORDER TO PROMOTE DRAINAGE AWAY FROM A STRUCTURE, THE SLAB ELEVATION SHOULD BE BUILT AT LEAST ONE-FOOT ABOVE THE SURROUNDING GROUND, AND THE GROUND SHOULD BE GRADED AWAY FROM THE STRUCTURE AT A SLOPE OF $\frac{1}{2}$" PER FOOT FOR A DISTANCE OF AT LEAST 10 FEET.
13. ALL SEDIMENTATION, FILTRATION, DETENTION, AND/OR RETENTION BASINS AND RELATED APPURTENANCES SHOWN SHALL BE SITUATED WITHIN A DRAINAGE EASEMENT OR DRAINAGE LOT. THE OWNERS, HOA, OR ASSIGNEES OF THE TRACTS UPON WHICH ARE LOCATED SUCH EASEMENTS, APPURTENANCES, AND DETENTION FACILITIES SHALL MAINTAIN SAME AND BE RESPONSIBLE FOR THEIR MAINTENANCE, ROUTINE INSPECTION, AND UPKEEP.
14. ALL INDIVIDUAL LOTS CONTAINING HERITAGE TREES ARE CONFIGURED AND DESIGNED SO THAT THE LOT IS DEVELOPABLE FOR THE INTENDED PURPOSE WITHOUT REQUIRING REMOVAL OF THE HERITAGE TREES OR EXCEEDING THE PERCENTAGE OF ALLOWABLE DISTURBANCE WITHIN THE HERITAGE TREES ORZ.
15. THE MONUMENTS OF THIS PLAT HAVE BEEN ROTATED TO THE NAD 83/93 HARN-TEXAS CENTRAL ZONE AND NAVD 88.
16. THE MAXIMUM IMPERVIOUS COVERAGE PER NON-RESIDENTIAL LOT IS 80%
17. THE LANDOWNER ASSUMES ALL RISKS ASSOCIATED WITH IMPROVEMENTS LOCATED IN THE RIGHT-OF-WAY, OR ROAD WIDENING EASEMENTS. BY PLACING ANYTHING IN THE RIGHT-OF-WAY OR ROAD WIDENING EASEMENTS, THE LANDOWNER INDEMNIFIES AND HOLDS THE CITY OF GEORGETOWN, WILLIAMSON COUNTY, THEIR OFFICERS, AGENTS AND EMPLOYEES HARMLESS FROM ANY LIABILITY OWING TO PROPERTY DEFECTS OR NEGLIGENCE NOT ATTRIBUTABLE TO THEM AND ACKNOWLEDGES THAT THE IMPROVEMENTS MAY BE REMOVED BY THE CITY AND/OR COUNTY AND THAT THE OWNER OF THE IMPROVEMENTS WILL BE RESPONSIBLE FOR THE RELOCATION AND/OR REPLACEMENT OF THE IMPROVEMENTS.
18. A GEOLOGIC ASSESSMENT, IN ACCORDANCE WITH THE CITY OF GEORGETOWN WATER QUALITY REGULATIONS, WAS COMPLETED ON JANUARY 22, 2020. ANY SPRINGS AND STREAMS AS IDENTIFIED IN THE GEOLOGIC ASSESSMENT ARE SHOWN HEREON.

THIS SUBDIVISION TO BE KNOWN AS "ASCEND WESTINGHOUSE" HAS BEEN ACCEPTED AND APPROVED FOR FILING OF RECORD WITH THE COUNTY CLERK OF WILLIAMSON COUNTY, TEXAS, ACCORDING TO THE MINUTES OF THE MEETING OF

THE GEORGETOWN PLANNING AND ZONING COMMISSION ON THE _____ DAY OF _____, 20____, A.D.

_____ _____
ERCEL BRASHEAR, CHAIRMAN DATE

_____ _____
CHERE HEINTZMANN, SECRETARY DATE

STATE OF TEXAS §
COUNTY OF WILLIAMSON §

PLANNING DIRECTOR

I, SOFIA NELSON, PLANNING DIRECTOR OF THE CITY OF GEORGETOWN, DO HEREBY CERTIFY THIS PLAT IS APPROVED FOR FILING OF RECORD WITH THE COUNTY CLERK OF WILLIAMSON COUNTY, TEXAS.

_____ _____
SOFIA NELSON, PLANNING DIRECTOR DATE

CITY FLOOD ADMINISTRATOR

BASED UPON THE REPRESENTATIONS OF THE ENGINEER OR SURVEYOR WHOSE SEAL IS AFFIXED HERETO, AND AFTER A REVIEW OF THE PLAT REPRESENTED BY SAID ENGINEER OR SURVEYOR, I FIND THAT THIS PLAT COMPLIES WITH THE REQUIREMENTS OF CHAPTER 15.44 FLOOD DAMAGE PREVENTION, OF THE GEORGETOWN MUNICIPAL CODE. THIS CERTIFICATION IS MADE SOLELY UPON SUCH REPRESENTATIONS AND SHOULD NOT BE RELIED UPON FOR VERIFICATION OF FACTS ALLEGED. THE CITY OF GEORGETOWN DISCLAIMS ANY RESPONSIBILITY TO ANY MEMBER OF THE PUBLIC OR INDEPENDENT VERIFICATIONS OF THE REPRESENTATION, FACTUAL OR OTHERWISE, CONTAINED IN THIS PLAT AND OTHER DOCUMENTS ASSOCIATED WITH IT.

_____ _____
GLEN HOLCOMB, BUILDING OFFICIAL DATE
CITY OF GEORGETOWN

COUNTY CLERK

STATE OF TEXAS §
§ KNOW ALL MEN BY THESE PRESENTS:
COUNTY OF WILLIAMSON §

I, NANCY E. RISTER, CLERK OF THE COUNTY COURT OF SAID COUNTY, DO HEREBY CERTIFY THAT THE FOREGOING INSTRUMENT IN WRITING, WITH ITS CERTIFICATE OF AUTHENTICATION WAS FILED FOR RECORD IN MY OFFICE ON THE _____ DAY OF _____, 20____ A.D., AT _____ O'CLOCK ___M., AND DULY RECORDED ON THIS _____ DAY OF _____, 20____ A.D., AT _____ O'CLOCK ___M. IN THE OFFICIAL PUBLIC RECORDS OF SAID COUNTY AND STATE IN DOCUMENT NO. _____.

TO CERTIFY WHICH, WITTNESS MY HAND AND SEAL AT THE COUNTY COURT OF SAID COUNTY, AT MY OFFICE IN GEORGETOWN, TEXAS, THE DATE LAST SHOWN ABOVE WRITTEN.

NANCY RISTER, CLERK COUNTY COURT
WILLIAMSON COUNTY, TEXAS

_____
DEPUTY

BGE, Inc.
101 West Louis Henna Blvd., Suite 400
Austin, Texas 78728
Tel: 512-879-0400 • www.bgeinc.com
TBPELS Registration No. F-1046
TBPELS Licensed Surveying Firm No. 10106502

ADDRESS: 500 WESTINGHOUSE ROAD

REV	DESCRIPTION	DATE	APR

DESIGNED BY: JG
REVIEWED BY: BG
DRAWN BY: JG

BROWN & GAY ENGINEERS, INC.
1701 DIRECTORS BLVD, SUITE 1000
AUSTIN, TX 78731
TBPE Registration No. F-1046
TEL: 512-879-0400 www.brownglay.com

500 WESTINGHOUSE ROAD

ASCEND WESTINGHOUSE
GEORGETOWN, TEXAS

FINAL PLAT (2 OF 2)

2020-41-SDP

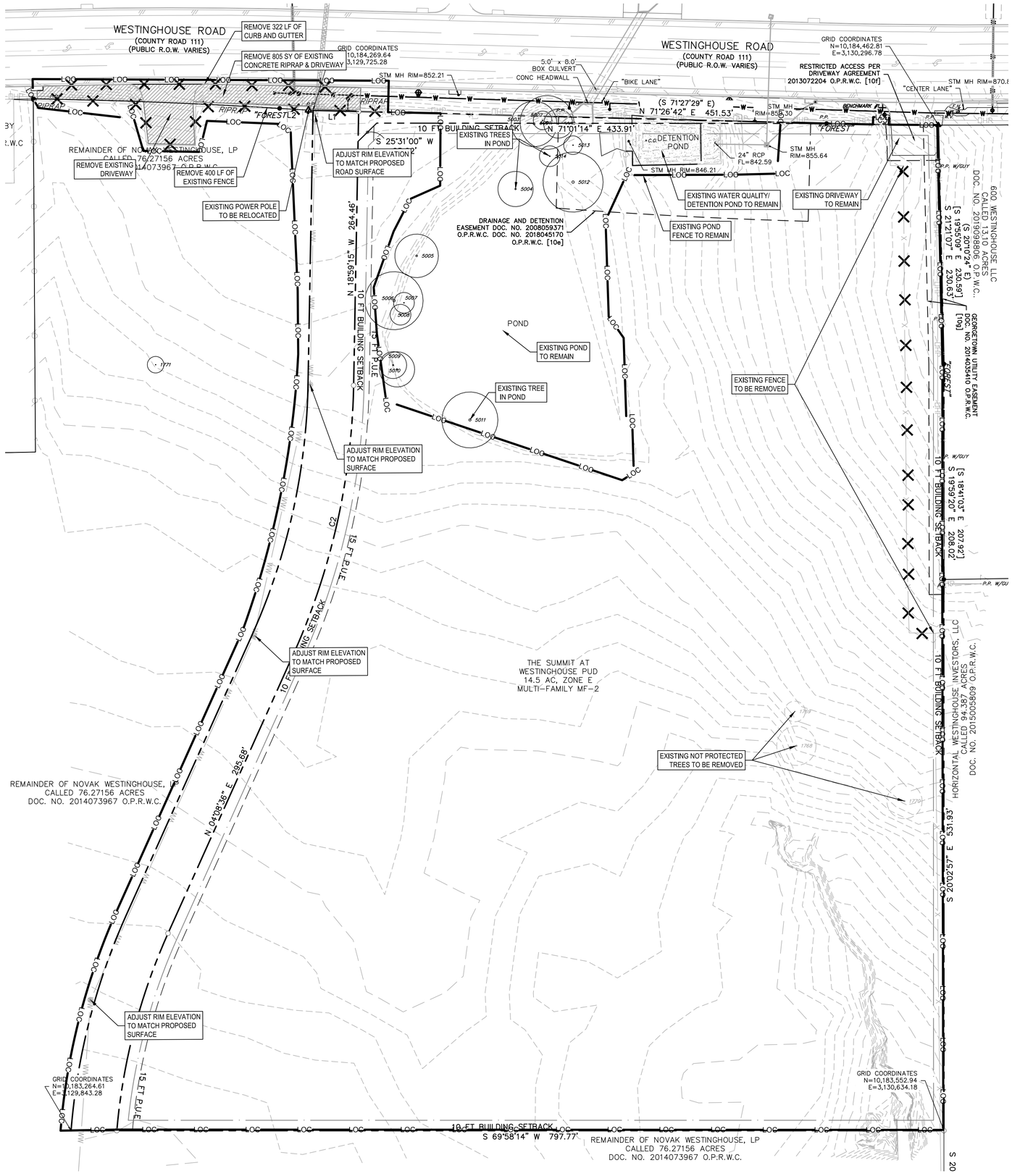

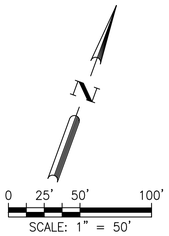

LEGEND

- PROPERTY BOUNDARY
- EXISTING MAJOR CONTOUR
- EXISTING MINOR CONTOUR
- ENGINEER CALCULATED FLOODPLAIN
- FIRE HYDRANT ASSEMBLY
- GATE VALVE
- DOUBLE WATER SERVICE
- SINGLE WATER SERVICE
- DOUBLE WASTEWATER SERVICE
- SINGLE WASTEWATER SERVICE
- TREE TO REMAIN
- TREE TO BE REMOVED
- REMOVE OBJECT
- DEMOLITION

* ALL UTILITY SYMBOLS ARE NOT TO SCALE AND ARE ONLY SHOWN FOR ILLUSTRATION PURPOSES.

Tree Schedule

	Key	Tree #	Size (individual trunks)	Half Critical Root Zone (in feet)	Species
REMOVED	~~NP~~	~~1768~~	~~19"~~	~~9.5'~~	~~CEDAR~~
REMOVED	~~NP~~	~~1769~~	~~10"~~	~~5'~~	~~CEDAR~~
REMOVED	~~NP~~	~~1770~~	~~13", 8"~~	~~8.5'~~	~~CEDAR~~
	P	5000	14"	7'	BLACK WILLOW
	P	5001	12", 12", 10", 6"	13'	BLACK WILLOW
	C	5002	7", 3"	4.5'	BLACK WILLOW
	P	5003	15", 14"	11'	BLACK WILLOW
	P	5004	13", 8"	8.5'	BLACK WILLOW
	P	5005	11", 10", 4", 3",2"	10.5'	BLACK WILLOW
	P	5006	20", 15"	14'	BLACK WILLOW
	C	5007	10"	5'	BLACK WILLOW
	C	5008	10"	5'	BLACK WILLOW
	P	5009	13"	6.5'	BLACK WILLOW
	P	5010	8", 7", 4", 3", 3"	8.5'	BLACK WILLOW
	P	5011	15", 10", 5", 3", 3"	13.5'	BLACK WILLOW
	P	5012	13", 13", 11", 8" (Laid over)	14.5'	BLACK WILLOW
	C	5013	5", 4", 3"	4.5'	BLACK WILLOW
	C	5014	5", 5", 4"	5'	BLACK WILLOW

LEGEND
- **P = Protected**
- **HT = Heritage Tree**
- **R = Removal of Protected Tree**
- **R-HT = Removal of Heritage Tree**
- **D = Dead or Diseased**
- **NP = Not Protected**
- **C = Credit Tree**
- **X = Prohibited Species (must be removed)**

ADDRESS: 500 WESTINGHOUSE ROAD

REV	DESCRIPTION	DATE	APR

DESIGNED BY: JG
REVIEWED BY: BG
DRAWN BY: JG

BGE
BROWN & GAY ENGINEERS, INC.
1701 DIRECTORS BLVD, SUITE 1000
AUSTIN, TX 78731
TBPE Registration No. F-1046
TEL: 512-879-0400 www.brownjgay.com

ASCEND WESTINGHOUSE
GEORGETOWN, TEXAS

EXISTING CONDITIONS AND DEMOLITION PLAN

STATE OF TEXAS
BRIAN J. GRACE
121846
LICENSED PROFESSIONAL ENGINEER
9/18/2020

SHEET 5 OF 76

500 WESTINGHOUSE ROAD

2020-41-SDP

G:\TXC\Projects\DHI_Communities\7616-00-Westinghouse\LD\01_CADD\01_Shts\02_Site Plan\7616-C-SP-EX COND.dwg Layout: EXISTING CONDITIONS AND DEMOLITION PLAN Plotted: 9/21/2020 9:43:06 AM

1 Building 1 - Rear Perspective

2 Building 1 - Entry Elevation

1 Typical Building Materials

1 Building 2 - Front Perspective

1 Building 1 - Front Perspective

Arch. Plan Notes

1. ALL SIGNAGE REQUIRES A SEPARATE APPLICATION AND APPROVAL FROM THE BUILDING INSPECTIONS DEPARTMENT. NO SIGNAGE IS APPROVED WITH THE SITE DEVELOPMENT PLAN.
2. COLOR SELECTION IS NOT APPROVED WITH THE SITE DEVELOPMENT PLAN AND MAY BE COUNTED TOWARD THE SIGNAGE CALCULATION IF IT IS FOUND TO REFLECT COLOR THAT IS CONSIDERED SIGNAGE ACCORDING TO THE DEFINITION OF SIGNAGE IN THE UDC.
3. THIS SITE DEVELOPMENT PLAN SHALL MEET ALL DESIGN STANDARDS FOR ARTICULATION, BUILDING DESIGN, ELEVATIONS AND ARCHITECTURAL FEATURES OF SECTION 7.03 OF THE UDC.
4. ALL ROOF, WALL AND GROUND MOUNTED MECHANICAL AND ELECTRICAL EQUIPMENT SHALL BE SCREENED USING THE FOLOWING METHODS:
   - ROOFTOP MECHANICAL EQUIPMENT: METAL SCREENING OR LOUVERS PAINTED TO BLEND WITH THE PRIMARY BUILDING
   - ELECTRICAL METERS: LANDSCAPE PLANTING.
5. FOUNDATION TYPE FOR ALL BUILDINGS ON THE SITE TO BE POURED-IN-PLACE SLAB FOUNDATION.

Exterior Finish Legend

EF2	HORIZONTAL FIBER CEMENT LAP SIDING 8" EXPOSURE
EF3a	FIBER CEMENT VERTICAL PANEL W/ EASY TRIM REVEALS
EF3b	FIBER CEMENT VERTICAL PANEL W/ BATTEN TRIM
EF6	STONE VENEER

Exterior Keynotes

E1	METAL AWNING
E2	42" HIGH MTL GUARDRAIL W/ 1/2" SQUARE MTL PICKETS 4" O.C.
E3	STONE VENEER HEADER & SILL COURSE; COLOR TO MATCH EF6
E4	FIBER CEMENT TRIM; COLOR TO MATCH EF2
E5	FIBER CEMENT TRIM; COLOR TO MATCH EF3b
E6	4:12 SLOPED ROOF W/ COMPOSITE ROOF SHINGLES

GENERAL NOTE: ALL COLORS ARE REPRESENTATIVE OF DESIGN CONCEPT. FINAL COLOR SELECTIONS HAVE NOT BEEN MADE. COLOR OF ALL WINDOWS, DOORS, AND STOREFRONT SYSTEMS WILL BE BASED ON AVAILABLE COLORS FROM GC'S SELECTED MANUFACTURER.

W PARTNERSHIP
Wallace · Wilson · Architects
5120 Woodway Dr. Suite 8000 Houston, Texas 77056 713.993.0439
www.wpartnership.com

No.	Date:	Revision Description:

Ascend Westinghouse Apartments

500 Westinghouse Road
Georgetown, TX 78626

DHI COMMUNITIES

SITE DEVELOPMENT PLAN - ISSUED 07/20/2020

08/31/2020

REGISTERED ARCHITECT MICHAEL GONOS REGISTRATION NUMBER 24287 STATE OF TEXAS

Architect of Record:	Registration Number:
Michael Gonos	24287

Issued:

03/30/2020	Schematic Design Set
08/05/2020	Design Development Set
09/23/2020	Issue For Permit

PROJECT NO: 19-19

SHEET CONTENTS:
DESIGN CONCEPT PERSPECTIVES

SHEET NO.
A4.1.5

2020-41-SDP

© W PARTNERSHIP, INC. These plans are copyrighted and are subject to copyright protection as an "Architectural work" under Section 102 of the Copyright Act, 17 U.S.C. as amended December 1, 1990, and known as Architectural Works Copyright Protection Act of 1990. The protection includes, but is not limited to, the overall form, as well as the arrangement and composition of spaces and elements of the design. Under such protection, unauthorized use of these plans, work or forms represented can legally result in the cessation of such construction or buildings being seized and/or razed.

Date Plotted: Sep 21, 2020 11:04am
T:\DHI\19-19\E-Cad\Sheets_SDP Elevations\2020-08-31_SDP Resubmission\A2.3.0_Design Perspectives.dwg

4 Building 1 - Side Elevation

SCALE: 3/32" = 1'-0"

Total Wall Area: 2,537 SQ. FT.		
Bldg Material	Area	Percentage
Stone	588 SQ. FT.	23.2%
Glazing / Openings	612 SQ. FT.	24.1%
Fiber Cement Panel	403 SQ. FT.	15.9%
F.C. Panel w/ Batten	661 SQ. FT.	26.1%
F.C. Siding	273 SQ. FT.	10.7%

3 Building 1 - Side Elevation

SCALE: 3/32" = 1'-0"

Total Wall Area: 2,532 SQ. FT.		
Bldg Material	Area	Percentage
Stone	511 SQ. FT.	20.2%
Glazing / Openings	771 SQ. FT.	30.4%
Fiber Cement Panel	361 SQ. FT.	14.3%
F.C. Panel w/ Batten	651 SQ. FT.	25.7%
F.C. Siding	238 SQ. FT.	9.4%

2 Building 1 - Front Elevation

SCALE: 3/32" = 1'-0"

Total Wall Area: 8,220 SQ. FT.		
Bldg Material	Area	Percentage
Stone	2,249 SQ. FT.	27.4%
Glazing / Openings	2,633 SQ. FT.	32.0%
Fiber Cement Panel	1,049 SQ. FT.	12.8%
F.C. Panel w/ Batten	1,273 SQ. FT.	15.5%
F.C. Siding	1,016 SQ. FT.	12.3%

1 Building 1 - Front Elevation

SCALE: 3/32" = 1'-0"

Total Wall Area: 8,466 SQ. FT.		
Bldg Material	Area	Percentage
Stone	1,810 SQ. FT.	21.3%
Glazing / Openings	2,708 SQ. FT.	31.9%
Fiber Cement Panel	1,765 SQ. FT.	20.8%
F.C. Panel w/ Batten	1,020 SQ. FT.	12.1%
F.C. Siding	1,164 SQ. FT.	13.7%

Arch. Plan Notes

1. ALL SIGNAGE REQUIRES A SEPARATE APPLICATION AND APPROVAL FROM THE BUILDING INSPECTIONS DEPARTMENT. NO SIGNAGE IS APPROVED WITH THE SITE DEVELOPMENT PLAN.
2. COLOR SELECTION IS NOT APPROVED WITH THE SITE DEVELOPMENT PLAN AND MAY BE COUNTED TOWARD THE SIGNAGE CALCULATION IF IT IS FOUND TO REFLECT COLOR THAT IS CONSIDERED SIGNAGE ACCORDING TO THE DEFINITION OF SIGNAGE IN THE UDC.
3. THIS SITE DEVELOPMENT PLAN SHALL MEET ALL DESIGN STANDARDS FOR ARTICULATION, BUILDING DESIGN, ELEVATIONS AND ARCHITECTURAL FEATURES OF SECTION 7.03 OF THE UDC.
4. ALL ROOF, WALL AND GROUND MOUNTED MECHANICAL AND ELECTRICAL EQUIPMENT SHALL BE SCREENED USING THE FOLOWING METHODS:
   - ROOFTOP MECHANICAL EQUIPMENT: METAL SCREENING OR LOUVERS PAINTED TO BLEND WITH THE PRIMARY BUILDING
   - ELECTRICAL METERS: LANDSCAPE PLANTING.
5. FOUNDATION TYPE FOR ALL BUILDINGS ON THE SITE TO BE POURED-IN-PLACE SLAB FOUNDATION.

Exterior Finish Legend

- EF2 — HORIZONTAL FIBER CEMENT LAP SIDING 8" EXPOSURE
- EF3a — FIBER CEMENT VERTICAL PANEL W/ EASY TRIM REVEALS
- EF3b — FIBER CEMENT VERTICAL PANEL W/ BATTEN TRIM
- EF6 — STONE VENEER

Exterior Keynotes

- E1 — METAL AWNING
- E2 — 42" HIGH MTL GUARDRAIL W/ 1/2" SQUARE MTL PICKETS 4" O.C.
- E3 — STONE VENEER HEADER & SILL COURSE; COLOR TO MATCH EF6
- E4 — FIBER CEMENT TRIM; COLOR TO MATCH EF2
- E5 — FIBER CEMENT TRIM; COLOR TO MATCH EF3b
- E6 — 4:12 SLOPED ROOF W/ COMPOSITE ROOF SHINGLES

Articulation Calc Tables

Horizontal Articulation for Footprint:
Maximum distance w/out perpendicular offset:
40'-10" x 3 = 122'-6"

Minimum depth of perpendicular offset:
40'-10" x 25% = 10'-3"

Minimum span of perpendicular offset:
40'-10" x 75% = 30'-8"

Vertical Articulation for Elevations:
Maximum distance w/out vertical elev. change:
40'-10" x 3 = 122'-6"

Minimum height of vertical elevation change:
40'-10" x 25% = 10'-3"

Minimum lateral elevation change:
40'-10" x 75% = 30'-8"

Architectural Features

Per Section 7.03.050.D of the City of Georgetown UDC

Section 1
1. Awning above stair entry
2. Windows
3. Balcony Projections
4. Pillar Posts

Section 2
5. Stepped-back roof heights
6. Varied Wall Surfaces: Fiber Cement Panels and Stone Veneer

Location Key Plan

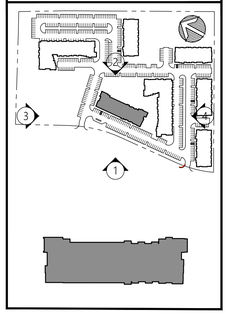

W PARTNERSHIP
Wallace · Wilson · Architects
5120 Woodway Dr. Suite 8000 Houston, Texas 77056 713 993 0439
www.wpartnership.com

No.	Date:	Revision Description:

Ascend Westinghouse Apartments

500 Westinghouse Road
Georgetown, TX 78626

DHI COMMUNITIES

SITE DEVELOPMENT PLAN - ISSUED 07/20/2020

08/31/2020

Architect of Record: Michael Gonos
Registration Number: 24287

Issued:
03/30/2020 Schematic Design Set
08/05/2020 Design Development Set
09/23/2020 Issue For Permit

PROJECT NO: 19-19

SHEET CONTENTS:
BUILDING 1 ELEVATIONS

SHEET NO. A4.1.5

2020-41-SDP

© W PARTNERSHIP, INC. These plans are copyrighted and are subject to copyright protection as an "Architectural work" under Section 102 of the Copyright Act, 17 U.S.C., as amended December 1, 1990, and known as Architectural Works Copyright Protection Act of 1990. The protection includes, but is not limited to, the overall form, as well as the arrangement and composition of spaces and elements of the design. Under such protection, unauthorized use of these plans, work or forms represented can legally result in the cessation of such construction or buildings being seized and/or razed.

Date Plotted: Sep 21, 2020 11:05am
T:\DHI\19-19\E-Cad\Sheets_SDP Elevations\2020-08-31_SDP Resubmission\A4.1.5_Building 1 Elevations.dwg

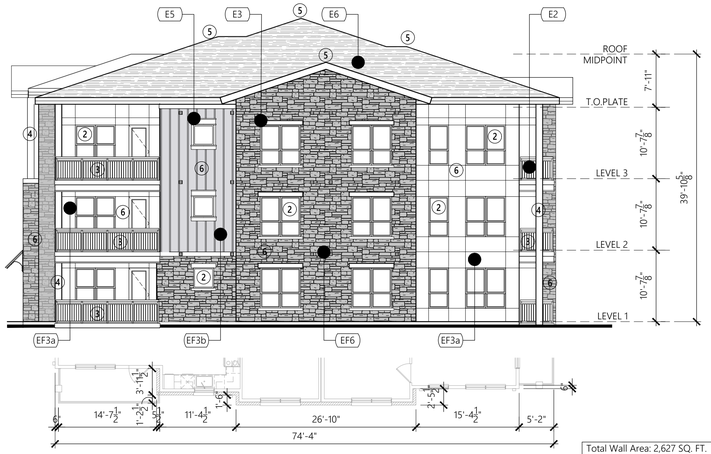

4 Buildings 3, 4, 5 & 6 - Side Elev

SCALE: 3/32" = 1'-0"

Total Wall Area: 2,627 SQ. FT.		
Bldg Material	Area	Percentage
Stone	1,040 SQ. FT.	39.6%
Glazing / Openings	587 SQ. FT.	22.3%
Fiber Cement Panel	768 SQ. FT.	29.2%
F.C. Panel w/ Batten	233 SQ. FT.	8.9%
F.C. Siding	0 SQ. FT.	0.0%

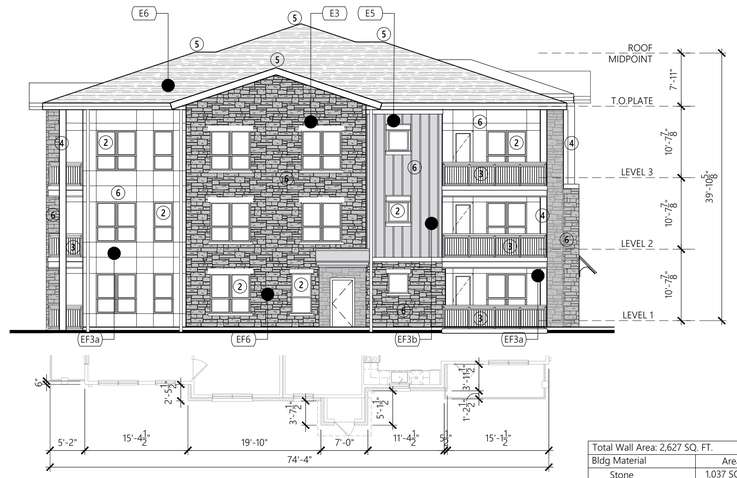

3 Buildings 3, 4, 5 & 6 - Side Elev

SCALE: 3/32" = 1'-0"

Total Wall Area: 2,627 SQ. FT.		
Bldg Material	Area	Percentage
Stone	1,037 SQ. FT.	39.4%
Glazing / Openings	590 SQ. FT.	22.5%
Fiber Cement Panel	768 SQ. FT.	29.2%
F.C. Panel w/ Batten	233 SQ. FT.	8.9%
F.C. Siding	0 SQ. FT.	0.0%

Total Wall Area: 5,957 SQ. FT.		
Bldg Material	Area	Percentage
Stone	1,118 SQ. FT.	18.8%
Glazing / Openings	1,651 SQ. FT.	27.7%
Fiber Cement Panel	1,438 SQ. FT.	24.1%
F.C. Panel w/ Batten	466 SQ. FT.	7.8%
F.C. Siding	1,284 SQ. FT.	21.6%

2 Buildings 3, 4, 5 & 6 - Rear Elev

SCALE: 3/32" = 1'-0"

Total Wall Area: 5,611 SQ. FT.		
Bldg Material	Area	Percentage
Stone	1,086 SQ. FT.	19.4%
Glazing / Openings	1,503 SQ. FT.	26.8%
Fiber Cement Panel	1,676 SQ. FT.	29.9%
F.C. Panel w/ Batten	210 SQ. FT.	3.7%
F.C. Siding	1,136 SQ. FT.	20.2%

1 Buildings 3, 4, 5 & 6 - Front Elev

SCALE: 3/32" = 1'-0"

Arch. Plan Notes

1. ALL SIGNAGE REQUIRES A SEPARATE APPLICATION AND APPROVAL FROM THE BUILDING INSPECTIONS DEPARTMENT. NO SIGNAGE IS APPROVED WITH THE SITE DEVELOPMENT PLAN.
2. COLOR SELECTION IS NOT APPROVED WITH THE SITE DEVELOPMENT PLAN AND MAY BE COUNTED TOWARD THE SIGNAGE CALCULATION IF IT IS FOUND TO REFLECT COLOR THAT IS CONSIDERED SIGNAGE ACCORDING TO THE DEFINITION OF SIGNAGE IN THE UDC.
3. THIS SITE DEVELOPMENT PLAN SHALL MEET ALL DESIGN STANDARDS FOR ARTICULATION, BUILDING DESIGN, ELEVATIONS AND ARCHITECTURAL FEATURES OF SECTION 7.03 OF THE UDC.
4. ALL ROOF, WALL AND GROUND MOUNTED MECHANICAL AND ELECTRICAL EQUIPMENT SHALL BE SCREENED USING THE FOLOWING METHODS:
   - ROOFTOP MECHANICAL EQUIPMENT: METAL SCREENING OR LOUVERS PAINTED TO BLEND WITH THE PRIMARY BUILDING
   - ELECTRICAL METERS: LANDSCAPE PLANTING.
5. FOUNDATION TYPE FOR ALL BUILDINGS ON THE SITE TO BE POURED-IN-PLACE SLAB FOUNDATION.

Exterior Finish Legend

- EF2 HORIZONTAL FIBER CEMENT LAP SIDING 8" EXPOSURE
- EF3a FIBER CEMENT VERTICAL PANEL W/ EASY TRIM REVEALS
- EF3b FIBER CEMENT VERTICAL PANEL W/ BATTEN TRIM
- EF6 STONE VENEER

Exterior Keynotes

- E1 METAL AWNING
- E2 42" HIGH MTL GUARDRAIL W/ 1/2" SQUARE MTL PICKETS 4" O.C.
- E3 STONE VENEER HEADER & SILL COURSE; COLOR TO MATCH EF6
- E4 FIBER CEMENT TRIM; COLOR TO MATCH EF2
- E5 FIBER CEMENT TRIM; COLOR TO MATCH EF3b
- E6 4:12 SLOPED ROOF W/ COMPOSITE ROOF SHINGLES

Articulation Calc Tables

Horizontal Articulation for Footprint:
Maximum distance w/out perpendicular offset:
39'-10" x 3 = 119'-6"

Minimum depth of perpendicular offset:
39'-10" x 25% = 10'-0"

Minimum span of perpendicular offset:
39'-10" x 75% = 29'-11"

Vertical Articulation for Elevations:
Maximum distance w/out vertical elev. change:
39'-10" x 3 = 119'-6"

Minimum height of vertical elevation change:
39'-10" x 25% = 10'-0"

Minimum lateral elevation change:
39'-10" x 75% = 29'-11"

Architectural Features

Per Section 7.03.050.D of the City of Georgetown UDC

Section 1
1. Awning above stair entry
2. Windows
3. Balcony Projections
4. Pillar Posts

Section 2
5. Stepped-back roof heights
6. Varied Wall Surfaces: Fiber Cement Panels and Stone Veneer

Location Key Plan

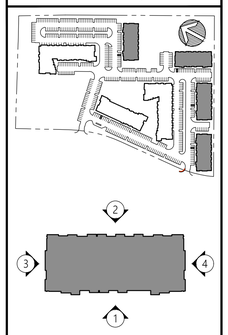

W PARTNERSHIP
Wallace · Wilson · Architects
5120 Woodway Dr. Suite 8000 Houston, Texas 77056 713.993.0439
www.wpartnership.com

No.	Date:	Revision Description:

Ascend Westinghouse Apartments

500 Westinghouse Road
Georgetown, TX 78626

DHI COMMUNITIES

SITE DEVELOPMENT PLAN - ISSUED 07/20/2020

08/31/2020

REGISTERED ARCHITECT MICHAEL JONATHAN GONOS 24287 STATE OF TEXAS

Architect of Record:	Registration Number:
Michael Gonos	24287

Issued:
03/30/2020 Schematic Design Set
08/05/2020 Design Development Set
09/23/2020 Issue For Permit

PROJECT NO: 19-19

SHEET CONTENTS:
BUILDINGS 3, 4, 5, & 6 ELEVATIONS

SHEET NO.
A4.2.5

2020-41-SDP

© W PARTNERSHIP, INC. These plans are copyrighted and are subject to copyright protection as an "Architectural work" under Section 203 of the Copyright Act, 17 U.S.C., as amended December 1, 1990, and known as Architectural Works Copyright Protection Act of 1990. The protection includes, but is not limited to, the overall form, as well as the arrangement and composition of spaces and elements of the design. Under such protection, unauthorized use of these plans, work or forms represented can legally result in the cessation of such construction or buildings being seized and/or razed.

Date Plotted: Sep 21, 2020 11:05am
T:\DHI\19-19\E-Cad\Sheets_SDP Elevations\2020-08-31_SDP Resubmission\A4.2.5_Buildings 3 4 5 and 6 Elevations.dwg

Architectural Features

Per Section 7.03.050.D of the City of Georgetown UDC

Section 1

1. Awning above stair entry
2. Windows
3. Balcony Projections
4. Pillar Posts

Section 2

5. Stepped-back roof heights
6. Varied Wall Surfaces: Fiber Cement Panels and Stone Veneer

Arch. Plan Notes

1. ALL SIGNAGE REQUIRES A SEPARATE APPLICATION AND APPROVAL FROM THE BUILDING INSPECTIONS DEPARTMENT. NO SIGNAGE IS APPROVED WITH THE SITE DEVELOPMENT PLAN.
2. COLOR SELECTION IS NOT APPROVED WITH THE SITE DEVELOPMENT PLAN AND MAY BE COUNTED TOWARD THE SIGNAGE CALCULATION IF IT IS FOUND TO REFLECT COLOR THAT IS CONSIDERED SIGNAGE ACCORDING TO THE DEFINITION OF SIGNAGE IN THE UDC.
3. THIS SITE DEVELOPMENT PLAN SHALL MEET ALL DESIGN STANDARDS FOR ARTICULATION, BUILDING DESIGN, ELEVATIONS AND ARCHITECTURAL FEATURES OF SECTION 7.03 OF THE UDC.
4. ALL ROOF, WALL AND GROUND MOUNTED MECHANICAL AND ELECTRICAL EQUIPMENT SHALL BE SCREENED USING THE FOLOWING METHODS:
   - ROOFTOP MECHANICAL EQUIPMENT: METAL SCREENING OR LOUVERS PAINTED TO BLEND WITH THE PRIMARY BUILDING
   - ELECTRICAL METERS: LANDSCAPE PLANTING.
5. FOUNDATION TYPE FOR ALL BUILDINGS ON THE SITE TO BE POURED-IN-PLACE SLAB FOUNDATION.

Exterior Finish Legend

EF2	HORIZONTAL FIBER CEMENT LAP SIDING 8" EXPOSURE
EF3a	FIBER CEMENT VERTICAL PANEL W/ EASY TRIM REVEALS
EF3b	FIBER CEMENT VERTICAL PANEL W/ BATTEN TRIM
EF6	STONE VENEER

Exterior Keynotes

E1	METAL AWNING
E2	42" HIGH MTL GUARDRAIL W/ 1/2" SQUARE MTL PICKETS 4" O.C.
E3	STONE VENEER HEADER & SILL COURSE; COLOR TO MATCH EF6
E4	FIBER CEMENT TRIM; COLOR TO MATCH EF2
E5	FIBER CEMENT TRIM; COLOR TO MATCH EF3b
E6	4:12 SLOPED ROOF W/ COMPOSITE ROOF SHINGLES

Articulation Calc Tables

Horizontal Ariculation for Footprint:
Maximum distance w/out perpendicular offset:
39'-10" x 3 = 119'-6"

Minimum depth of perpendicular offset:
39'-10" x 25% = 10'-0"

Minimum span of perpendicular offset:
39'-10" x 75% = 29'-11"

Vertical Articulation for Elevations:
Maximum distance w/out vertical elev. change:
39'-10" x 3 = 119'-6"

Minimum height of vertical elevation change:
39'-10" x 25% = 10'-0"

Minimum lateral elevation change:
39'-10" x 75% = 29'-11"

Location Key Plan

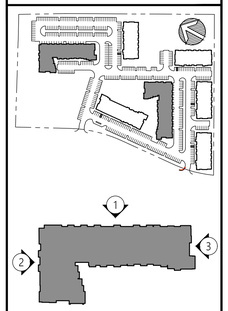

3 Buildings 2 & 7 - Side Elev

SCALE: 3/32" = 1'-0"

Total Wall Area: 2,465 SQ. FT.		
Bldg Material	Area	Percentage
Stone	530 SQ. FT.	21.5%
Glazing / Openings	630 SQ. FT.	25.6%
Fiber Cement Panel	750 SQ. FT.	30.4%
F.C. Panel w/ Batten	306 SQ. FT.	12.4%
F.C. Siding	249 SQ. FT.	10.1%

2 Buildings 2 & 7 - Rear Elev

SCALE: 3/32" = 1'-0"

Total Wall Area: 4,680 SQ. FT.		
Bldg Material	Area	Percentage
Stone	1,242 SQ. FT.	26.5%
Glazing / Openings	1,089 SQ. FT.	23.3%
Fiber Cement Panel	1,180 SQ. FT.	25.2%
F.C. Panel w/ Batten	422 SQ. FT.	9.0%
F.C. Siding	747 SQ. FT.	16.0%

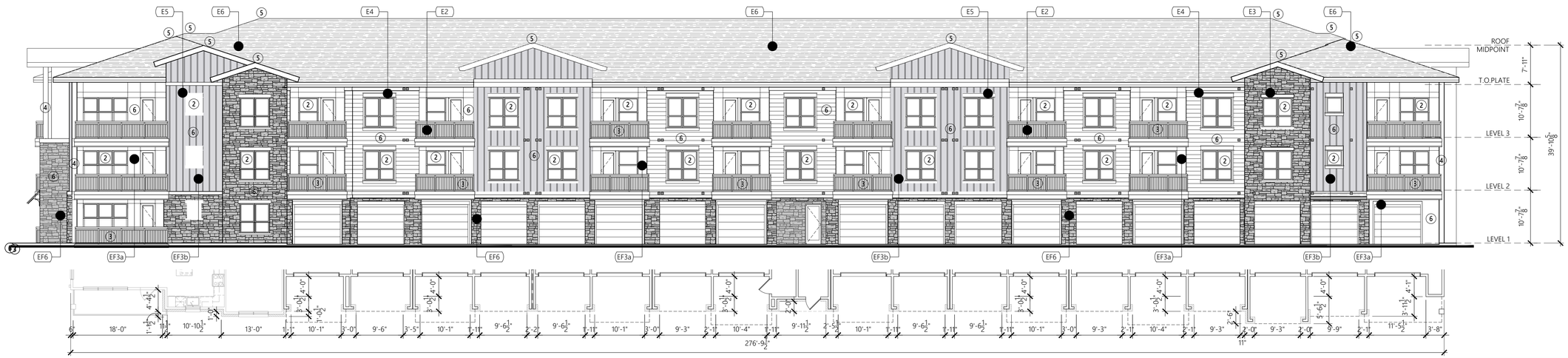

1 Buildings 2 & 7 - Front Elev

SCALE: 3/32" = 1'-0"

Total Wall Area: 9,453 SQ. FT.		
Bldg Material	Area	Percentage
Stone	1,712 SQ. FT.	18.1%
Glazing / Openings	1,899 SQ. FT.	20.1%
Fiber Cement Panel	1,721 SQ. FT.	18.2%
F.C. Panel w/ Batten	1,539 SQ. FT.	16.3%
F.C. Siding	2,582 SQ. FT.	27.3%

W PARTNERSHIP
Wallace · Wilson · Architects
5120 Woodway Dr. Suite 8000 Houston, Texas 77056 713.993.0439
www.wpartnership.com

No.	Date:	Revision Description:

Ascend Westinghouse Apartments

500 Westinghouse Road
Georgetown, TX 78626

DHI COMMUNITIES

SITE DEVELOPMENT PLAN - ISSUED 07/20/2020

08/31/2020

REGISTERED ARCHITECT JONATHAN MICHAEL GONOS 24287 STATE OF TEXAS

Architect of Record:	Registration Number:
Michael Gonos	24287

Issued:

03/30/2020	Schematic Design Set
08/05/2020	Design Development Set
09/23/2020	Issue For Permit

PROJECT NO: 19-19

SHEET CONTENTS:
BUILDINGS 2 & 7 ELEVATIONS

SHEET NO. A4.3.5

2020-41-SDP

© W PARTNERSHIP, INC. These plans are copyrighted and are subject to copyright protection as an "Architectural work" under Section 203 of the Copyright Act, 17 U.S.C., as amended December 1, 1990, and known as Architectural Works Copyright Protection Act of 1990. The protection includes, but is not limited to, the overall form, as well as the arrangement and composition of spaces and elements of the design. Under such protection, unauthorized use of these plans, work or forms represented can legally result in the circulation of such construction or buildings being seized and/or razed.

Date Plotted: Sep 21, 2020 11:26am
T:\DHI\19-19\E-Cad\Sheets_SDP Elevations\2020-08-31_SDP Resubmission\A4.3.5_Buildings 2 and 7 Elevations.dwg

Architectural Features

Per Section 7.03.050.D of the City of Georgetown UDC

Section 1

1. Awning above stair entry
2. Windows
3. Balcony Projections
4. Pillar Posts

Section 2

5. Stepped-back roof heights
6. Varied Wall Surfaces: Fiber Cement Panels and Stone Veneer

Exterior Finish Legend

EF2	HORIZONTAL FIBER CEMENT LAP SIDING 8" EXPOSURE
EF3a	FIBER CEMENT VERTICAL PANEL W/ EASY TRIM REVEALS
EF3b	FIBER CEMENT VERTICAL PANEL W/ BATTEN TRIM
EF6	STONE VENEER

Exterior Keynotes

E1	METAL AWNING
E2	42" HIGH MTL GUARDRAIL W/ 1/2" SQUARE MTL PICKETS 4" O.C.
E3	STONE VENEER HEADER & SILL COURSE; COLOR TO MATCH EF6
E4	FIBER CEMENT TRIM; COLOR TO MATCH EF2
E5	FIBER CEMENT TRIM; COLOR TO MATCH EF3b
E6	4:12 SLOPED ROOF W/ COMPOSITE ROOF SHINGLES

Articulation Calc Tables

Horizontal Ariculation for Footprint:
Maximum distance w/out perpendicular offset:
39'-10" x 3 = 119'-6"

Minimum depth of perpendicular offset:
39'-10" x 25% = 10'-0"

Minimum span of perpendicular offset:
39'-10" x 75% = 29'-11"

Vertical Articulation for Elevations:
Maximum distance w/out vertical elev. change:
39'-10" x 3 = 119'-6"

Minimum height of vertical elevation change:
39'-10" x 25% = 10'-0"

Minimum lateral elevation change:
39'-10" x 75% = 29'-11"

Location Key Plan

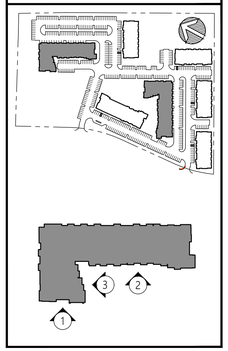

Arch. Plan Notes

1. ALL SIGNAGE REQUIRES A SEPARATE APPLICATION AND APPROVAL FROM THE BUILDING INSPECTIONS DEPARTMENT. NO SIGNAGE IS APPROVED WITH THE SITE DEVELOPMENT PLAN.
2. COLOR SELECTION IS NOT APPROVED WITH THE SITE DEVELOPMENT PLAN AND MAY BE COUNTED TOWARD THE SIGNAGE CALCULATION IF IT IS FOUND TO REFLECT COLOR THAT IS CONSIDERED SIGNAGE ACCORDING TO THE DEFINITION OF SIGNAGE IN THE UDC.
3. THIS SITE DEVELOPMENT PLAN SHALL MEET ALL DESIGN STANDARDS FOR ARTICULATION, BUILDING DESIGN, ELEVATIONS AND ARCHITECTURAL FEATURES OF SECTION 7.03 OF THE UDC.
4. ALL ROOF, WALL AND GROUND MOUNTED MECHANICAL AND ELECTRICAL EQUIPMENT SHALL BE SCREENED USING THE FOLOWING METHODS:
   - ROOFTOP MECHANICAL EQUIPMENT: METAL SCREENING OR LOUVERS PAINTED TO BLEND WITH THE PRIMARY BUILDING
   - ELECTRICAL METERS: LANDSCAPE PLANTING.
5. FOUNDATION TYPE FOR ALL BUILDINGS ON THE SITE TO BE POURED-IN-PLACE SLAB FOUNDATION.

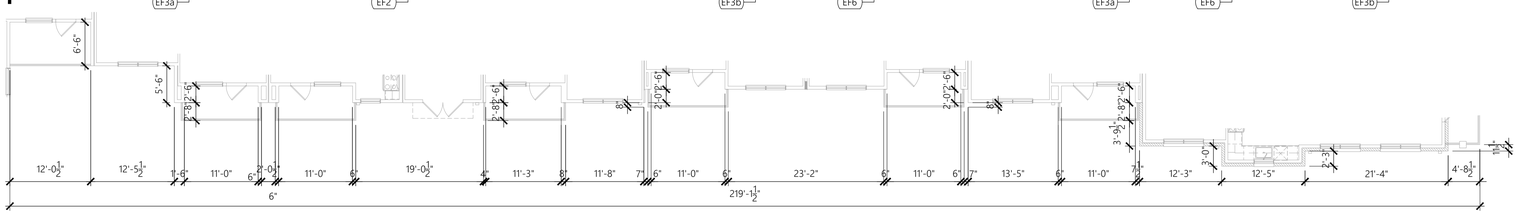

2 Buildings 2 & 7 - Rear Elev

SCALE: 3/32" = 1'-0"

Total Wall Area: 6,873 SQ. FT.		
Bldg Material	Area	Percentage
Stone	923 SQ. FT.	13.4%
Glazing / Openings	2,061 SQ. FT.	30.0%
Fiber Cement Panel	1,465 SQ. FT.	21.3%
F.C. Panel w/ Batten	858 SQ. FT.	12.5%
F.C. Siding	1,566 SQ. FT.	22.8%

3 Buildings 2 & 7 - Side Elev

SCALE: 3/32" = 1'-0"

Total Wall Area: 2,626 SQ. FT.		
Bldg Material	Area	Percentage
Stone	737 SQ. FT.	28.1%
Glazing / Openings	657 SQ. FT.	25.0%
Fiber Cement Panel	226 SQ. FT.	8.6%
F.C. Panel w/ Batten	401 SQ. FT.	15.3%
F.C. Siding	605 SQ. FT.	23.0%

1 Buildings 2 & 7 - Front Elev

SCALE: 3/32" = 1'-0"

Total Wall Area: 2,453 SQ. FT.		
Bldg Material	Area	Percentage
Stone	509 SQ. FT.	20.8%
Glazing / Openings	630 SQ. FT.	25.7%
Fiber Cement Panel	769 SQ. FT.	31.3%
F.C. Panel w/ Batten	289 SQ. FT.	11.8%
F.C. Siding	256 SQ. FT.	10.4%

W PARTNERSHIP
Wallace · Wilson · Architects
5120 Woodway Dr. Suite 8000 Houston, Texas 77056 713 993 0439
www.wpartnership.com

No.	Date:	Revision Description:

Ascend Westinghouse Apartments

500 Westinghouse Road
Georgetown, TX 78626

DHI COMMUNITIES

SITE DEVELOPMENT PLAN - ISSUED 07/20/2020

08/31/2020

REGISTERED ARCHITECT JONATHAN WILSON 29251 STATE OF TEXAS

Architect of Record: Michael Gonos
Registration Number: 24287

Issued:
03/30/2020 Schematic Design Set
08/05/2020 Design Development Set
09/23/2020 Issue For Permit

PROJECT NO: 19-19

SHEET CONTENTS:
BUILDINGS 2 & 7 ELEVATIONS

SHEET NO. A4.3.6

2020-41-SDP

© W PARTNERSHIP, INC. These plans are copyrighted and are subject to copyright protection as an "Architectural work" under Section 203 of the Copyright Act, 17 U.S.C., as amended December 1, 1990, and known as Architectural Works Copyright Protection Act of 1990. The protection includes, but is not limited to, the overall form, as well as the arrangement and composition of spaces and elements of the design. Under such protection, unauthorized use of these plans, work or forms represented can legally result in the circulation of such construction or buildings being seized and/or razed.

Date Plotted: Sep 21, 2020 11:26am
T:\DHI\19-19\E-Cad\Sheets_SDP Elevations\2020-08-31_SDP Resubmission\A4.3.5_Buildings 2 and 7 Elevations.dwg

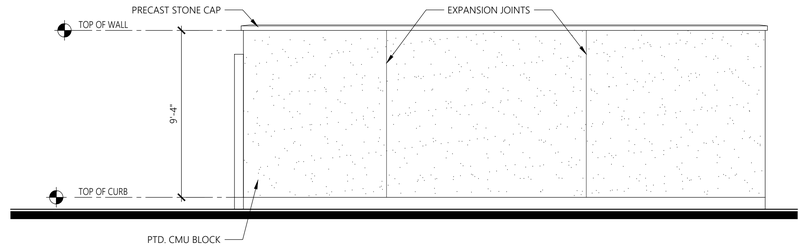

3 TRASH COMPACTOR ELEVATION

SCALE: 1/4" = 1'-0"

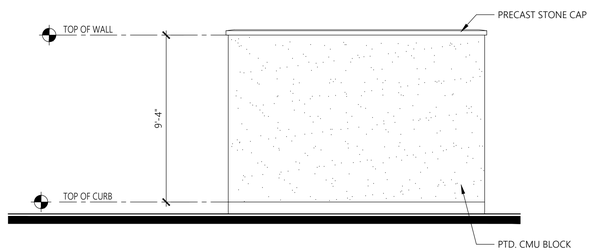

5 TRASH COMPACTOR ELEVATION

SCALE: 1/4" = 1'-0"

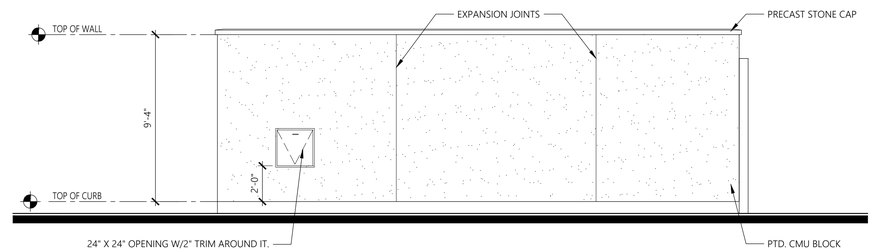

2 TRASH COMPACTOR ELEVATION

SCALE: 1/4" = 1'-0"

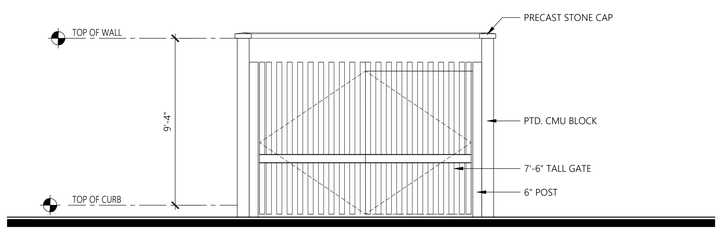

4 TRASH COMPACTOR ELEVATION

SCALE: 1/4" = 1'-0"

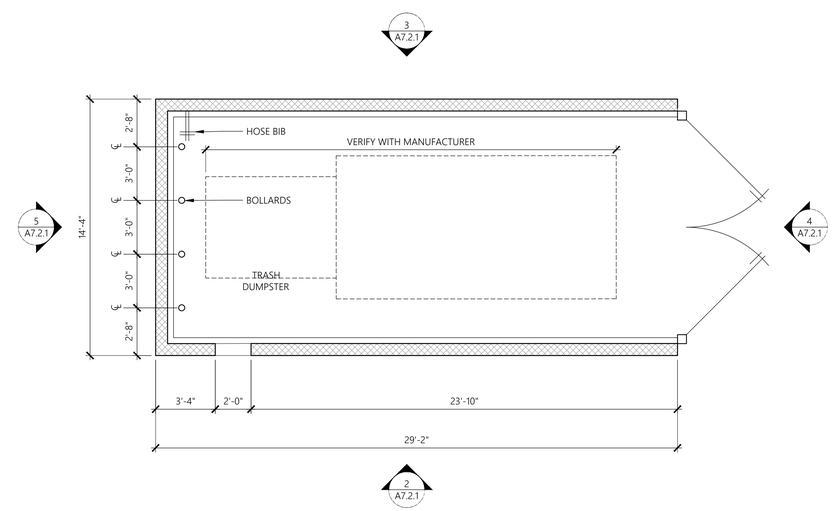

1 TRASH COMPACTOR PLAN

SCALE: 1/4" = 1'-0"

W PARTNERSHIP
Wallace · Wilson · Architects
5120 Woodway Dr. Suite 8000 Houston, Texas 77056 713.993.0439
www.wpartnership.com

No.	Date:	Revision Description:

Ascend Westinghouse Apartments

500 Westinghouse Road
Georgetown, TX 78626

DHI COMMUNITIES

SITE DEVELOPMENT PLAN - ISSUED 07/20/2020

08/31/2020

REGISTERED ARCHITECT MICHAEL GONOS 24287 STATE OF TEXAS

Architect of Record: **Michael Gonos**
Registration Number: **24287**

Issued:
03/30/2020 Schematic Design Set
08/05/2020 Design Development Set
09/23/2020 Issue For Permit

PROJECT NO: **19-19**

SHEET CONTENTS:
TRASH COMPACTOR

SHEET NO.
A7.2.1

2020-41-SDP

© W PARTNERSHIP, INC. These plans are copyrighted and are subject to copyright protection as an "Architectural work" under Section 103 of the Copyright Act, 17 U.S.C., as amended December 1, 1990, and known as Architectural Works Copyright Protection Act of 1990. The protection includes, but is not limited to, the overall form, as well as the arrangement and composition of spaces and elements of the design. Under such protection, unauthorized use of these plans, work or forms represented can legally result in the cessation of such construction or buildings being seized and/or razed.

Date Plotted: Sep 21, 2020 11:07am
T:\DH\19-19\E-Cad\Sheets_SDP Elevations\2020-08-31_SDP Resubmission\A7.2.1 Trash Compactor.dwg

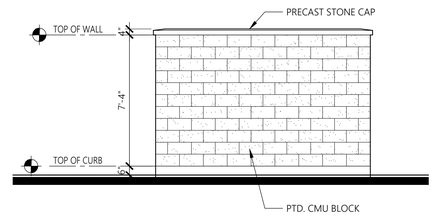

3 ENCLOSURE ELEVATION

SCALE: 1/4" = 1'-0"

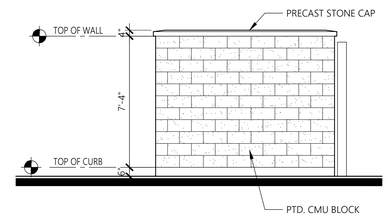

2 ENCLOSURE ELEVATION

SCALE: 1/4" = 1'-0"

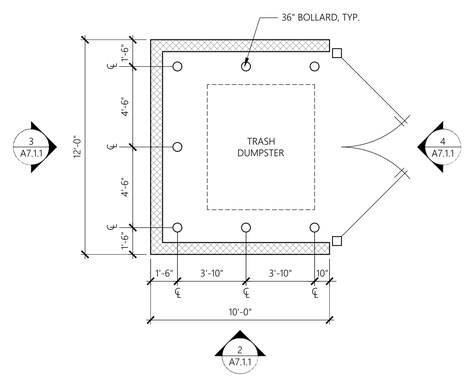

1 ENCLOSURE PLAN

SCALE: 1/4" = 1'-0"

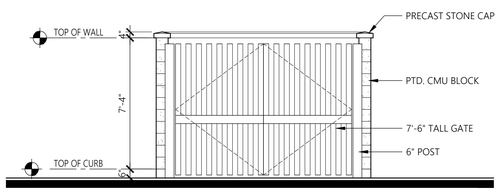

4 ENCLOSURE ELEVATION

SCALE: 1/4" = 1'-0"

W PARTNERSHIP
Wallace · Wilson · Architects
5120 Woodway Dr. · Suite 8000 · Houston, Texas · 77056 · 713.993.0439
www.wpartnership.com

No.	Date:	Revision Description:

Ascend Westinghouse Apartments

500 Westinghouse Road
Georgetown, TX 78626

DHI COMMUNITIES

SITE DEVELOPMENT PLAN - ISSUED 07/20/2020

08/31/2020

REGISTERED ARCHITECT
MICHAEL JONATHAN GONOS
24287
STATE OF TEXAS

Architect of Record: Michael Gonos
Registration Number: 24287

Issued:
03/30/2020 Schematic Design Set
08/05/2020 Design Development Set
09/23/2020 Issue For Permit

PROJECT NO: 19-19

SHEET CONTENTS:
TRASH ENCLOSURE

SHEET NO.
A7.2.2

2020-41-SDP

Date Plotted: Sep 21, 2020 11:07am
T:\DHI\19-19\E-Cad\Sheets_SDP Elevations\2020-08-31_SDP Resubmission\A7.2.2 Trash Enclosure Plans.dwg

© W PARTNERSHIP, INC. These plans are copyrighted and are subject to copyright protection as an "Architectural work" under Section 203 of the Copyright Act, 17 U.S.C., as amended December 1, 1990, and known as Architectural Works Copyright Protection Act of 1990. The protection includes, but is not limited to, the overall form, as well as the arrangement and composition of spaces and elements of the design. Under such protection, unauthorized use of these plans, work or forms represented can legally result in the cessation of such construction or buildings being sized and/or razed.

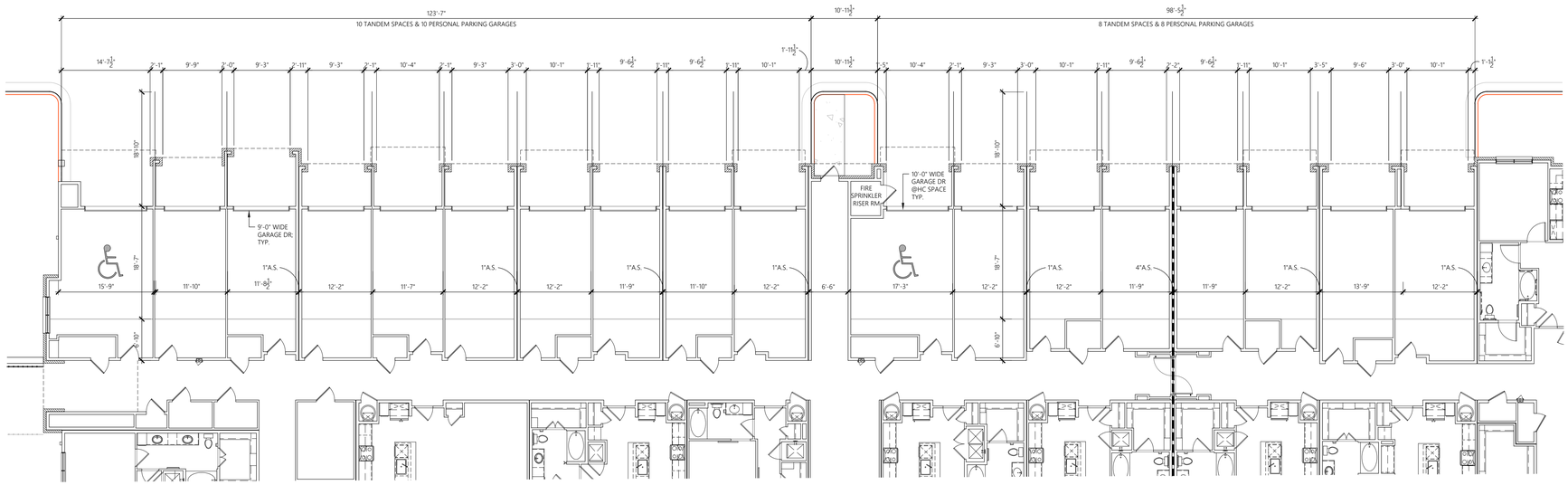

2 BUILDING 7 GARAGE PLANS

SCALE: 1/8" = 1'-0"

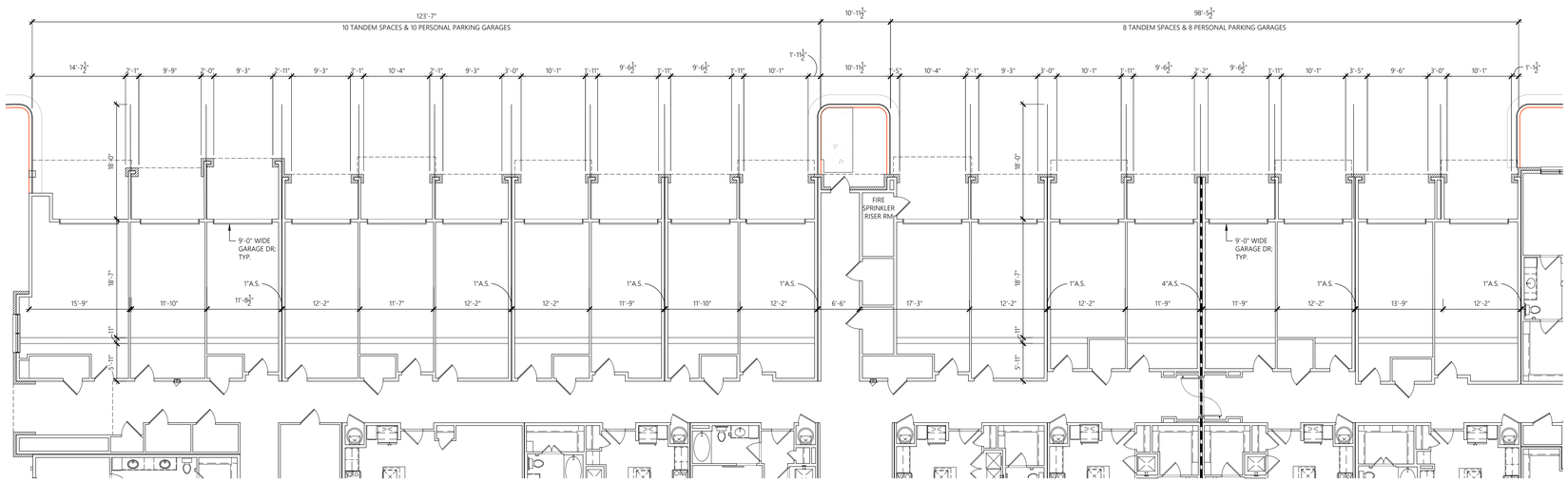

1 BUILDING 2 GARAGE PLANS

SCALE: 1/8" = 1'-0"

W PARTNERSHIP
Wallace · Wilson · Architects
5120 Woodway Dr. Suite 8000 Houston, Texas 77056 713 993 0439
www.wpartnership.com

No.	Date:	Revision Description:

Ascend Westinghouse Apartments

500 Westinghouse Road
Georgetown, TX 78626

DHI COMMUNITIES

SITE DEVELOPMENT PLAN - ISSUED 07/20/2020

08/31/2020

REGISTERED ARCHITECT MICHAEL JONATHAN GONOS 24287 STATE OF TEXAS

Architect of Record:	Registration Number:
Michael Gonos	24287

Issued:
03/30/2020 Schematic Design Set
08/05/2020 Design Development Set
09/23/2020 Issue For Permit

PROJECT NO: 19-19

SHEET CONTENTS:
ENLARGED GARAGE PLANS

SHEET NO.
AG1.1.1

2020-41-SDP

© W PARTNERSHIP, INC. These plans are copyrighted and are subject to copyright protection as an "Architectural work" under Section 203 of the Copyright Act, 17 U.S.C. as amended December 1, 1990, and known as Architectural Works Copyright Protection Act of 1990. The protection includes, but is not limited to, the overall form, as well as the arrangement and composition of spaces and elements of the design. Under such protection, unauthorized use of these plans, work or forms represented can legally result in the cessation of such construction or buildings being seized and/or razed.

Date Plotted: Sep 21, 2020 11:07am
T:\DHI\19-19\E-Cad\Sheets_SDP Elevations\2020-08-31_SDP Resubmission\AG1.1.1_Building 2 Garage Plans.dwg

METER CENTER "MC2VBA"

TOTAL UNITS SERVED = 24

SQUARE FOOTAGE	21222	SF	X	3	VA/SF	63.7 KVA
KITCHEN/LAUNDRY	4500	VA	X	24		108.0 KVA
RANGES	8000	VA	X	24		192.0 KVA
DRYERS	5000	VA	X	24		120.0 KVA
DISPOSALS	800	VA	X	24		19.2 KVA
DISHWASHERS	1200	VA	X	24		28.8 KVA
MICROWAVE/HOOD	1000	VA	X	24		24.0 KVA
WATER HEATERS	0	VA				0.0 KVA
TOTAL HVAC	144600	VA				144.6 KVA
			SUBTOTAL			700.3 KVA
DEMAND FACTOR	700.3	KVA	X	35	%	245.1 KVA
H.P.	6.4	KVA	X	100	%	6.4 KVA
N.E.C. TABLE 220-84						
TOTAL						251.5 KVA
VOLTAGE: 208/120		PHASE: 3				698.1 AMPS

FOR ANY BREAKER 1200A OR HIGHER, AN ARC-ENERGY REDUCING SWITCH SHALL BE PROVIDED, OR A PLACARD STATING "WHEN WORKING WITHIN THE ARC-FLASH BOUNDARY, BREAKER INSTANTANEOUS SETTING SHOULD BE MINIMIZED FOR ARC-ENERGY REDUCTION PURPOSES. ORIGINAL SETTING SHALL BE RESTORED UPON WORK COMPLETION".

BLDG FLOORS				# OF UNIT	UNIT NAME
1	2	3	4		
					A0
					A1
4	4	4		12	A2
					A3
2	2	2		6	A4
					A5
					B1
2	2	2		6	B2
					B3
					C1

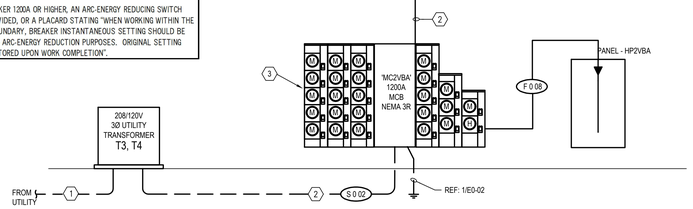

4 BUILDING TYPE '2 - VARIATION A' RISER DIAGRAM - MC2VBA

SCALE: NTS

BUILDINGS: 3,4

METER CENTER "MC1"

TOTAL UNITS SERVED = 40

SQUARE FOOTAGE	36870	SF	X	3	VA/SF	110.6 KVA
KITCHEN/LAUNDRY	4500	VA	X	40		180.0 KVA
RANGES	8000	VA	X	40		320.0 KVA
DRYERS	5000	VA	X	40		200.0 KVA
DISPOSALS	800	VA	X	40		32.0 KVA
DISHWASHERS	1200	VA	X	40		48.0 KVA
MICROWAVE/HOOD	1000	VA	X	40		40.0 KVA
WATER HEATERS	0	VA				0.0 KVA
TOTAL HVAC	264100	VA				264.1 KVA
			SUBTOTAL			1194.7 KVA
DEMAND FACTOR	1194.7	KVA	X	28	%	334.5 KVA
H.P.	6.1	KVA	X	100	%	6.1 KVA
N.E.C. TABLE 220-84						
TOTAL						340.6 KVA
VOLTAGE: 208/120		PHASE: 3				945.4 AMPS

FOR ANY BREAKER 1200A OR HIGHER, AN ARC-ENERGY REDUCING SWITCH SHALL BE PROVIDED, OR A PLACARD STATING "WHEN WORKING WITHIN THE ARC-FLASH BOUNDARY, BREAKER INSTANTANEOUS SETTING SHOULD BE MINIMIZED FOR ARC-ENERGY REDUCTION PURPOSES. ORIGINAL SETTING SHALL BE RESTORED UPON WORK COMPLETION".

BLDG FLOORS				# OF UNIT	UNIT NAME
1	2	3	4		
					A0
4	4	4		12	A1
2	6	6		14	A2
					A3
					A4
					A5
	2	2		4	B1
					B2
1	2	2		5	B3
1	2	2		5	C1

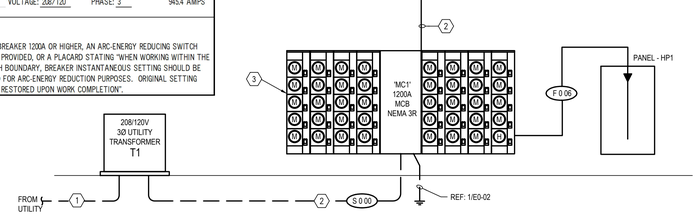

3 BUILDING TYPE '1' RISER DIAGRAM - MC1

SCALE: NTS

BUILDINGS: 1

GENERAL NOTES:

G-1 THE 22 KAIC BREAKERS AT THE METERS SHALL BE SERIES RATED WITH THE 65 KAIC MAIN SERVICE BREAKER(S) FOR 10 KAIC PROTECTION AT THE LOAD CENTER. METER CENTERS AND LOAD CENTERS SHALL BE U.L. LISTED AND LABELED FOR THIS PURPOSE.

G-2 WHERE APPLICABLE, CONTRACTOR TO PROVIDE A PLAQUE AT EACH SERVICE LOCATION DENOTING LOCATION FOR ALL OTHER SERVICES AT EACH BUILDING.

G-3 CONTRACTOR TO PROVIDE A PERMANENTLY AFFIXED LABEL WITH AVAILABLE FAULT CURRENT AT THE TIME OF INSTALLATION AND CALCULATION. LABEL TO BE IN ACCORDANCE WITH NEC AND INCLUDE THE DATE OF CALCULATION. ARC FLASH LABELING AND INFORMATION TO ALSO BE PROVIDED AT SERVICES THAT MEET ARC FLASH REQUIREMENTS.

G-4 PRIOR TO FINAL ORDERING OF PANELBOARDS, CIRCUIT BREAKERS, AND ALL ASSOCIATED EQUIPMENT, THE CONTRACTOR SHALL ARRANGE FOR AND PROVIDE TO THE ELECTRICAL ENGINEER OF RECORD VIA THE ARCHITECT A LETTER FROM THE LOCAL POWER COMPANY ON THEIR LETTERHEAD STATING THE SHORT CIRCUIT FAULT CURRENT AVAILABLE AT THE SECONDARY OF THE UTILITY COMPANY TRANSFORMER. INFORMATION SHALL BE USED TO DETERMINE THE FINAL A.I.C. RATING OF THE PANELBOARDS, METER CENTERS, MAIN DISCONNECT SWITCHES AND CIRCUIT BREAKERS.

KEY NOTES:

1. THE CONTRACTOR SHALL COORDINATE WITH LOCAL UTILITY COMPANY REGARDING CONNECTIONS BETWEEN UTILITY COMPANY TRANSFORMERS AND TAP ENCLOSURES.
2. REFER TO DWELLING UNIT FEEDER SCHEDULE ON THIS SHEET FOR UNIT FEEDER SIZING
2. CONTRACTOR TO FURNISH AND INSTALL U.L. LISTED SERIES RATED CURRENT LIMITING CIRCUIT BREAKERS WITH AMPERE RATINGS INDICATED. BREAKERS SHALL BE TESTED TO PROTECT DOWNSTREAM EQUIPMENT AT RATINGS INDICATED. METERS ARE 125A MAX DEVICE UNLESS NOTED OTHERWISE.

METER CENTER "MC2VBA"

TOTAL UNITS SERVED = 24

SQUARE FOOTAGE	21222	SF	X	3	VA/SF	63.7 KVA
KITCHEN/LAUNDRY	4500	VA	X	24		108.0 KVA
RANGES	8000	VA	X	24		192.0 KVA
DRYERS	5000	VA	X	24		120.0 KVA
DISPOSALS	800	VA	X	24		19.2 KVA
DISHWASHERS	1200	VA	X	24		28.8 KVA
MICROWAVE/HOOD	1000	VA	X	24		24.0 KVA
WATER HEATERS	0	VA				0.0 KVA
TOTAL HVAC	144600	VA				144.6 KVA
			SUBTOTAL			700.3 KVA
DEMAND FACTOR	700.3	KVA	X	35	%	245.1 KVA
H.P.	6.4	KVA	X	100	%	6.4 KVA
N.E.C. TABLE 220-84						
TOTAL						251.5 KVA
VOLTAGE: 208/120		PHASE: 3				698.1 AMPS

FOR ANY BREAKER 1200A OR HIGHER, AN ARC-ENERGY REDUCING SWITCH SHALL BE PROVIDED, OR A PLACARD STATING "WHEN WORKING WITHIN THE ARC-FLASH BOUNDARY, BREAKER INSTANTANEOUS SETTING SHOULD BE MINIMIZED FOR ARC-ENERGY REDUCTION PURPOSES. ORIGINAL SETTING SHALL BE RESTORED UPON WORK COMPLETION".

BLDG FLOORS				# OF UNIT	UNIT NAME
1	2	3	4		
					A0
					A1
4	4	4		12	A2
					A3
2	2	2		6	A4
					A5
					B1
2	2	2		6	B2
					B3
					C1

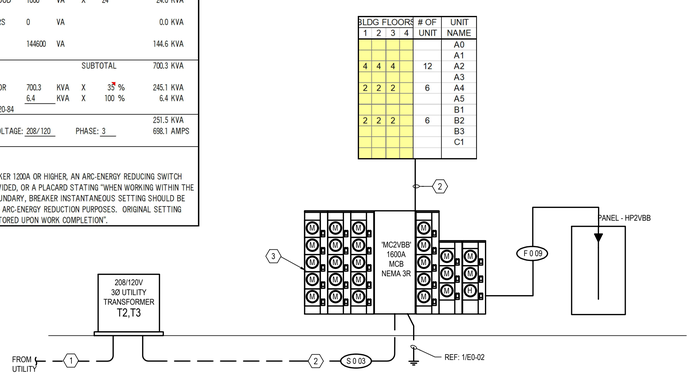

2 BUILDING TYPE '2 - VARIATION B' RISER DIAGRAM - MC2VBB

SCALE: NTS

BUILDINGS: 3,4

METER CENTER "MC2"

TOTAL UNITS SERVED = 36

SQUARE FOOTAGE	32985	SF	X	3	VA/SF	99.0 KVA
KITCHEN/LAUNDRY	4500	VA	X	36		162.0 KVA
RANGES	8000	VA	X	36		288.0 KVA
DRYERS	5000	VA	X	36		180.0 KVA
DISPOSALS	800	VA	X	36		28.8 KVA
DISHWASHERS	1200	VA	X	36		43.2 KVA
MICROWAVE/HOOD	1000	VA	X	36		36.0 KVA
WATER HEATERS	0	VA				0.0 KVA
TOTAL HVAC	225600	VA				225.6 KVA
			SUBTOTAL			1062.6 KVA
DEMAND FACTOR	1062.6	KVA	X	30	%	318.8 KVA
H.P.	6.8	KVA	X	100	%	6.8 KVA
N.E.C. TABLE 220-84						
TOTAL						325.6 KVA
VOLTAGE: 208/120		PHASE: 3				903.6 AMPS

FOR ANY BREAKER 1200A OR HIGHER, AN ARC-ENERGY REDUCING SWITCH SHALL BE PROVIDED, OR A PLACARD STATING "WHEN WORKING WITHIN THE ARC-FLASH BOUNDARY, BREAKER INSTANTANEOUS SETTING SHOULD BE MINIMIZED FOR ARC-ENERGY REDUCTION PURPOSES. ORIGINAL SETTING SHALL BE RESTORED UPON WORK COMPLETION".

BLDG FLOORS				# OF UNIT	UNIT NAME
1	2	3	4		
1	1	1		3	A0
					A1
4	4	4		12	A2
					A3
3	3	3		9	A4
					A5
					B1
4	4	4		12	B2
					B3
					C1

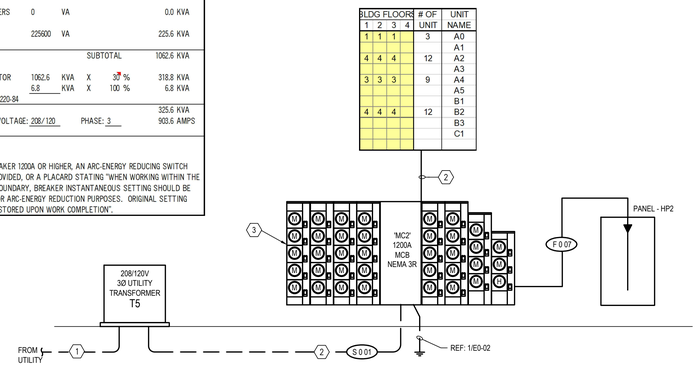

1 BUILDING TYPE '2' RISER DIAGRAM - MC2

SCALE: NTS

BUILDINGS: 5, 7, 8

JSE
Jordan & Skala Engineers
17855 North Dallas Parkway • Suite 320
Dallas, TX. 75287
p. 469.385.1616 • f. 469.385.1615
Texas Registered Engineering Firm F-4990

STATE OF TEXAS
MARK N. BIGBEE
83876
LICENSED
PROFESSIONAL ENGINEER
8/24/20

THIS DRAWING IS THE PROPERTY OF JORDAN & SKALA ENGINEERS INC., AND IS NOT TO BE REPRODUCED IN WHOLE OR IN PART WITHOUT WRITTEN PERMISSION BY JORDAN & SKALA ENGINEERS.

ASCEND WESTINGHOUSE APTS.

GEORGETOWN, TEXAS

PRINT RECORD

DATE	ISSUED FOR
08/05/2020	DESIGN DEVELOPMENT

REVISIONS

#	DATE	DESCRIPTION
1	08/25/2020	SDP COMMENTS

Project Number: 2030071

Drawn By: JR Checked By: MJ

SHEET TITLE

RISERS

SHEET NUMBER

E0.0.1

SHEET 14 OF 76

NOT ISSUED FOR CONSTRUCTION

2020-41-SDP

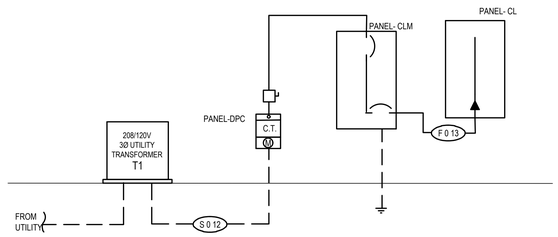

1 CLUBHOUSE RISER DIAGRAM
SCALE: NTS
BUILDINGS: 1

METER CENTER "MC3A"

			TOTAL UNITS SERVED =			42
SQUARE FOOTAGE	38397	SF	X	3	VA/SF	115.2 KVA
KITCHEN/LAUNDRY	4500	VA	X	42		189.0 KVA
RANGES	8000	VA	X	42		336.0 KVA
DRYERS	5000	VA	X	42		210.0 KVA
DISPOSALS	800	VA	X	42		33.6 KVA
DISHWASHERS	1200	VA	X	42		50.4 KVA
MICROWAVE/HOOD	1000	VA	X	42		42.0 KVA
WATER HEATERS	0	VA				0.0 KVA
TOTAL HVAC	270100	VA				270.1 KVA
			SUBTOTAL			1246.3 KVA
DEMAND FACTOR	1246.3	KVA	X	28 %		349.0 KVA
H.P.	6.8	KVA	X	100 %		6.8 KVA
N.E.C. TABLE 220-84						
TOTAL						355.8 KVA
VOLTAGE: 208/120			PHASE: 3			987.4 AMPS

FOR ANY BREAKER 1200A OR HIGHER, AN ARC-ENERGY REDUCING SWITCH SHALL BE PROVIDED, OR A PLACARD STATING "WHEN WORKING WITHIN THE ARC-FLASH BOUNDARY, BREAKER INSTANTANEOUS SETTING SHOULD BE MINIMIZED FOR ARC-ENERGY REDUCTION PURPOSES. ORIGINAL SETTING SHALL BE RESTORED UPON WORK COMPLETION".

BLDG FLOORS				# OF UNIT	UNIT NAME
1	2	3	4		
1	1	1		3	A0
2	5	5		12	A1
1				1	A2
1	1	1		3	A3
2	2	2		6	A4
1	1	1		3	A6
	3	3		6	B1
	1	1		2	B2
1	1	1		3	B3
1	1	1		3	C1

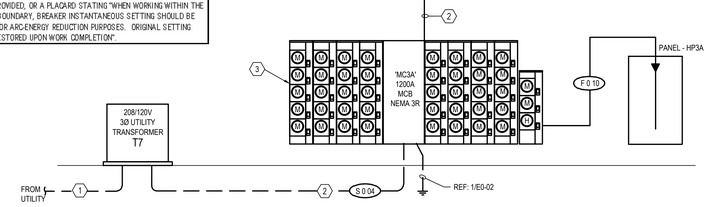

1 BUILDING TYPE '3' RISER DIAGRAM - MC3A
SCALE: NTS
BUILDINGS: 5, 7, 8

GENERAL NOTES:

G-1 THE 22 KAIC BREAKERS AT THE METERS SHALL BE SERIES RATED WITH THE 65 KAIC MAIN SERVICE BREAKER(S) FOR 10 KAIC PROTECTION AT THE LOAD CENTER. METER CENTERS AND LOAD CENTERS SHALL BE U.L. LISTED AND LABELED FOR THIS PURPOSE.

G-2 WHERE APPLICABLE, CONTRACTOR TO PROVIDE A PLAQUE AT EACH SERVICE LOCATION DENOTING LOCATION FOR ALL OTHER SERVICES AT EACH BUILDING.

G-3 CONTRACTOR TO PROVIDE A PERMANENTLY AFFIXED LABEL WITH AVAILABLE FAULT CURRENT AT THE TIME OF INSTALLATION AND CALCULATION. LABEL TO BE IN ACCORDANCE WITH NEC AND INCLUDE THE DATE OF CALCULATION. ARC FLASH LABELING AND INFORMATION TO ALSO BE PROVIDED AT SERVICES THAT MEET ARC FLASH REQUIREMENTS.

G-4 PRIOR TO FINAL ORDERING OF PANELBOARDS, CIRCUIT BREAKERS, AND ALL ASSOCIATED EQUIPMENT, THE CONTRACTOR SHALL ARRANGE FOR AND PROVIDE TO THE ELECTRICAL ENGINEER OF RECORD VIA THE ARCHITECT A LETTER FROM THE LOCAL POWER COMPANY ON THEIR LETTERHEAD STATING THE SHORT CIRCUIT FAULT CURRENT AVAILABLE AT THE SECONDARY OF THE UTILITY COMPANY TRANSFORMER. INFORMATION SHALL BE USED TO DETERMINE THE FINAL A.I.C. RATING OF THE PANELBOARDS, METER CENTERS, MAIN DISCONNECT SWITCHES AND CIRCUIT BREAKERS.

KEY NOTES:

1. THE CONTRACTOR SHALL COORDINATE WITH LOCAL UTILITY COMPANY REGARDING CONNECTIONS BETWEEN UTILITY COMPANY TRANSFORMERS AND TAP ENCLOSURES.
2. REFER TO DWELLING UNIT FEEDER SCHEDULE ON THIS SHEET FOR UNIT FEEDER SIZING
2. CONTRACTOR TO FURNISH AND INSTALL U.L. LISTED SERIES RATED CURRENT LIMITING CIRCUIT BREAKERS WITH AMPERE RATINGS INDICATED. BREAKERS SHALL BE TESTED TO PROTECT DOWNSTREAM EQUIPMENT AT RATINGS INDICATED. METERS ARE 125A MAX DEVICE UNLESS NOTED OTHERWISE.

SCHEDULE OF FEEDERS & SERVICES

Feeder/Service Description				Number of Runs	Conductor Size			Conduit Diameter (in)	Calculated Fault Value
Designation	Equipment Served	Conductor Ampacity (Amps)	Copper or Aluminum		Phase Conductor	Neutral Conductor	Equipment Ground		
S 0 00	MC1	1200	AL	4 sets	3 # 500	1 # 500	-	4	44,085
S 0 01	MC2	1200	AL	4 sets	3 # 500	1 # 500	-	4	36,329
S 0 02	MC2VBA	1200	AL	4 sets	3 # 500	1 # 500	-	4	31,319
S 0 03	MC2VBB	810	AL	3 sets	3 # 400	1 # 400	-	4	24,460
S 0 04	MC3A	1200	AL	4 sets	3 # 500	1 # 500	-	4	46,081
S 0 05	MC3B	810	AL	3 sets	3 # 400	1 # 400	-	4	43,668
F 0 06	HP1	135	AL	1 set	3 # 2/0	1 # 2/0	1 # 4	2	29,180
F 0 07	HP2	135	AL	1 set	3 # 2/0	1 # 2/0	1 # 4	2	25,562
F 0 08	HP2VBA	135	AL	1 set	3 # 2/0	1 # 2/0	1 # 4	2	22,980
F 0 09	HP2VBB	135	AL	1 set	3 # 2/0	1 # 2/0	1 # 4	2	19,869
F 0 10	HP3A	135	AL	1 set	3 # 2/0	1 # 2/0	1 # 4	2	30,033
F 0 11	HP3B	135	AL	1 set	3 # 2/0	1 # 2/0	1 # 4	2	25,010
S 0 12	CLM	810	AL	3 sets	3 # 400	1 # 400	-	4	41,010
F 0 13	CL	135	AL	1 set	3 # 2/0	1 # 2/0	1 # 4	2	27,801

METER CENTER "MC3B"

			TOTAL UNITS SERVED =			16
SQUARE FOOTAGE	15441	SF	X	3	VA/SF	46.3 KVA
KITCHEN/LAUNDRY	4500	VA	X	16		72.0 KVA
RANGES	8000	VA	X	16		128.0 KVA
DRYERS	5000	VA	X	16		80.0 KVA
DISPOSALS	800	VA	X	16		12.8 KVA
DISHWASHERS	1200	VA	X	16		19.2 KVA
MICROWAVE/HOOD	1000	VA	X	16		16.0 KVA
WATER HEATERS	0	VA				0.0 KVA
TOTAL HVAC	109100	VA				109.1 KVA
			SUBTOTAL			483.4 KVA
DEMAND FACTOR	483.4	KVA	X	39 %		188.5 KVA
H.P.	6.8	KVA	X	100 %		6.8 KVA
N.E.C. TABLE 220-84						
TOTAL						195.3 KVA
VOLTAGE: 208/120			PHASE: 3			542.2 AMPS

FOR ANY BREAKER 1200A OR HIGHER, AN ARC-ENERGY REDUCING SWITCH SHALL BE PROVIDED, OR A PLACARD STATING "WHEN WORKING WITHIN THE ARC-FLASH BOUNDARY, BREAKER INSTANTANEOUS SETTING SHOULD BE MINIMIZED FOR ARC-ENERGY REDUCTION PURPOSES. ORIGINAL SETTING SHALL BE RESTORED UPON WORK COMPLETION".

BLDG FLOORS				# OF UNIT	UNIT NAME
1	2	3	4		
					A0
1	2	2		5	A1
	2	2		4	A2
					A3
1				1	A4
					A5
					B1
					B2
1	1	1		3	B3
1	1	1		3	C1

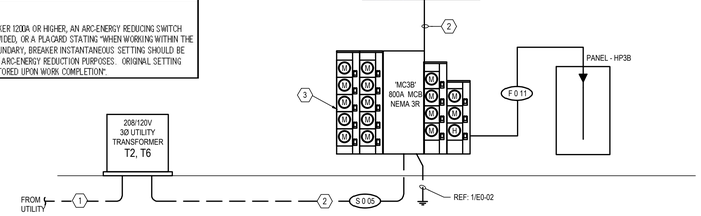

1 BUILDING TYPE '3' RISER DIAGRAM - MC3B
SCALE: NTS
BUILDINGS: 2, 7

JSE
Jordan & Skala Engineers
17855 North Dallas Parkway • Suite 320
Dallas, TX, 75287
p. 469.385.1616 • f. 469.385.1615
Texas Registered Engineering Firm F-4990

STATE OF TEXAS
MARK N. BIGBIE
83876
LICENSED
PROFESSIONAL ENGINEER
8/24/20

THIS DRAWING IS THE PROPERTY OF JORDAN & SKALA ENGINEERS INC., AND IS NOT TO BE REPRODUCED IN WHOLE OR IN PART WITHOUT WRITTEN PERMISSION BY JORDAN & SKALA ENGINEERS.

ASCEND WESTINGHOUSE APTS.
GEORGETOWN, TEXAS

PRINT RECORD

DATE	ISSUED FOR
08/05/2020	DESIGN DEVELOPMENT

REVISIONS

	DATE	DESCRIPTION
1	08/28/2020	SDP COMMENTS

Project Number: 2030071
Drawn By: JR Checked By: MJ

SHEET TITLE
RISERS

SHEET NUMBER
E0.0.2
SHEET 15 OF 76

NOT ISSUED FOR CONSTRUCTION

2020-41-SDP

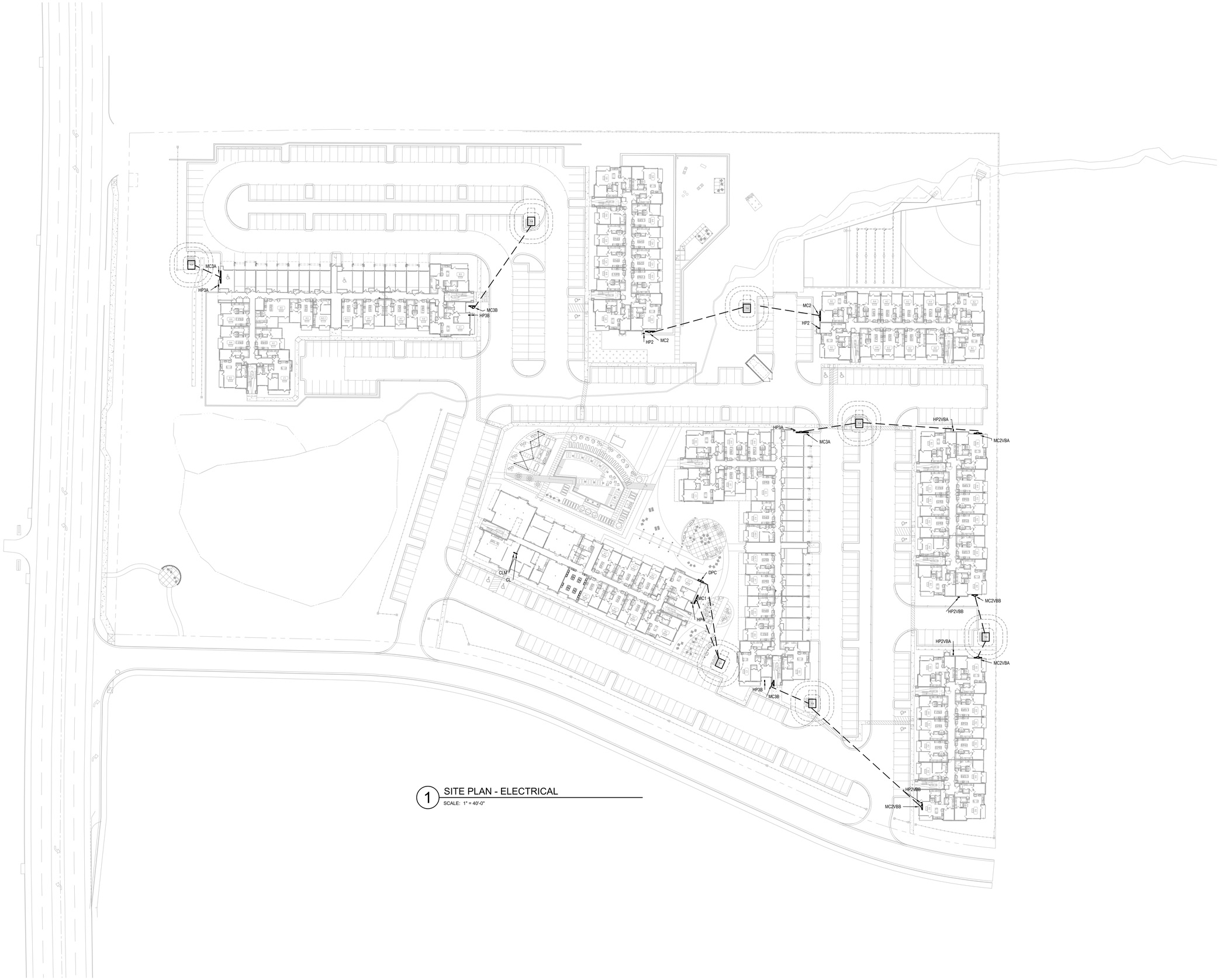

1 SITE PLAN - ELECTRICAL

SCALE: 1" = 40'-0"

JSE

Jordan & Skala Engineers

17855 North Dallas Parkway • Suite 320
Dallas, TX, 75287
p. 469.385.1616 • f. 469.385.1615
Texas Registered Engineering Firm F-4990

STATE OF TEXAS
MARK N. BIGBIE
83876
LICENSED
PROFESSIONAL ENGINEER
8/24/20

THIS DRAWING IS THE PROPERTY OF JORDAN & SKALA ENGINEERS INC. AND IS NOT TO BE REPRODUCED IN WHOLE OR IN PART WITHOUT WRITTEN PERMISSION BY JORDAN & SKALA ENGINEERS.

ASCEND WESTINGHOUSE APTS.

GEORGETOWN, TEXAS

PRINT RECORD

DATE	ISSUED FOR
08/05/2020	DESIGN DEVELOPMENT

REVISIONS

#	DATE	DESCRIPTION
1	08/28/2020	SDP COMMENTS

Project Number: 2030071

Drawn By: JR Checked By: MJ

SHEET TITLE

SITE PLAN

SHEET NUMBER

E1.1.1

SHEET 16 OF 76

NOT ISSUED FOR CONSTRUCTION

2020-41-SDP

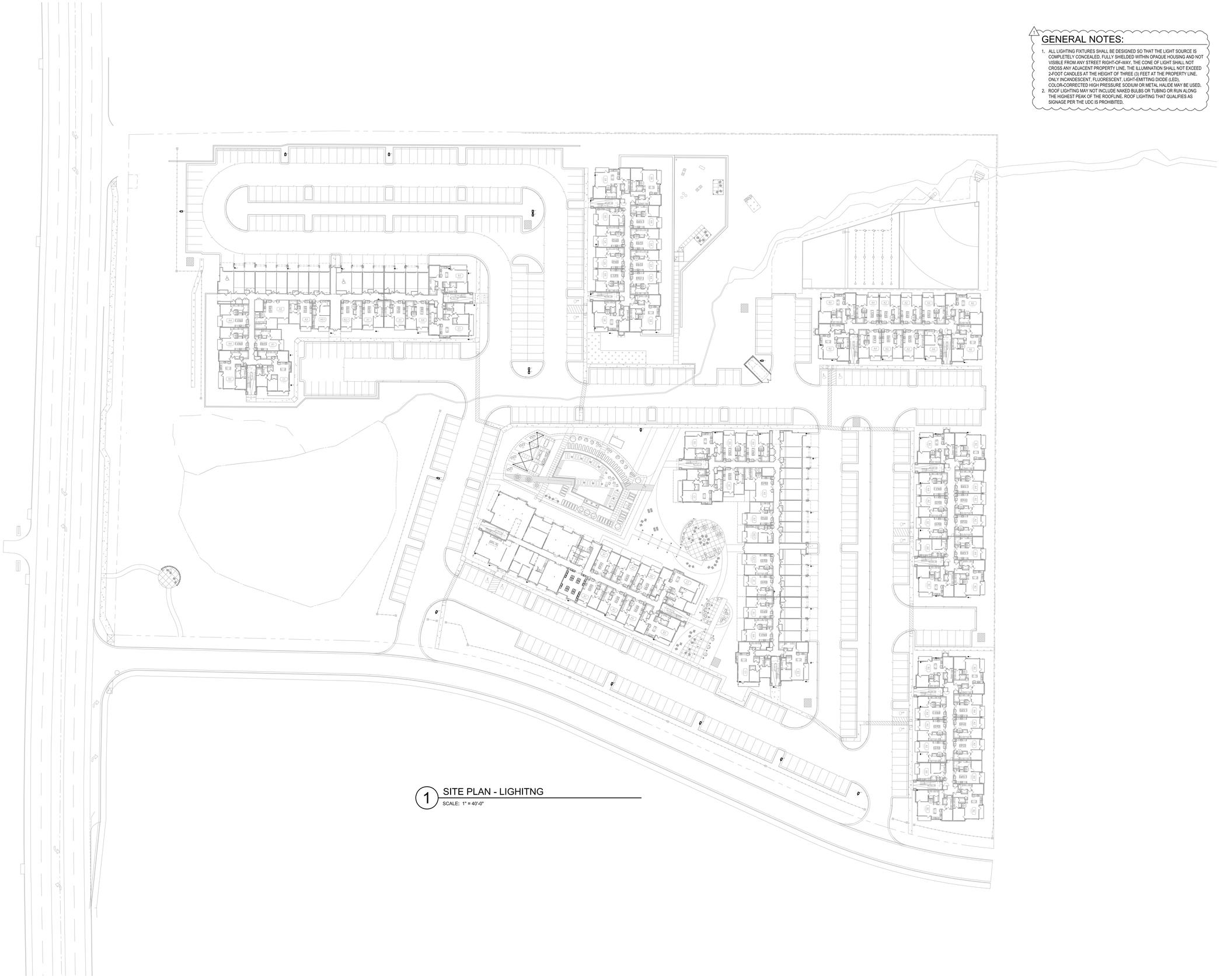

1 SITE PLAN - LIGHITNG

SCALE: 1" = 40'-0"

GENERAL NOTES:

1. ALL LIGHTING FIXTURES SHALL BE DESIGNED SO THAT THE LIGHT SOURCE IS COMPLETELY CONCEALED, FULLY SHIELDED WITHIN OPAQUE HOUSING AND NOT VISIBLE FROM ANY STREET RIGHT-OF-WAY. THE CONE OF LIGHT SHALL NOT CROSS ANY ADJACENT PROPERTY LINE. THE ILLUMINATION SHALL NOT EXCEED 2-FOOT CANDLES AT THE HEIGHT OF THREE (3) FEET AT THE PROPERTY LINE. ONLY INCANDESCENT, FLUORESCENT, LIGHT-EMITTING DIODE (LED), COLOR-CORRECTED HIGH PRESSURE SODIUM OR METAL HALIDE MAY BE USED.
2. ROOF LIGHTING MAY NOT INCLUDE NAKED BULBS OR TUBING OR RUN ALONG THE HIGHEST PEAK OF THE ROOFLINE. ROOF LIGHTING THAT QUALIFIES AS SIGNAGE PER THE UDC IS PROHIBITED.

JSE

Jordan & Skala Engineers

17855 North Dallas Parkway • Suite 320

Dallas, TX. 75287

p. 469.385.1616 • f. 469.385.1615

Texas Registered Engineering Firm F-4990

STATE OF TEXAS
MARK N. BIGBIE
83876
LICENSED
PROFESSIONAL ENGINEER
8/27/20

THIS DRAWING IS THE PROPERTY OF JORDAN & SKALA ENGINEERS INC. AND IS NOT TO BE REPRODUCED IN WHOLE OR IN PART WITHOUT WRITTEN PERMISSION BY JORDAN & SKALA ENGINEERS.

ASCEND WESTINGHOUSE APTS.

GEORGETOWN, TEXAS

PRINT RECORD

DATE	ISSUED FOR
08/05/2020	DESIGN DEVELOPMENT

REVISIONS

#	DATE	DESCRIPTION
1	08/28/2020	SDP COMMENTS

Project Number: 2030071

Drawn By: JR Checked By: MJ

SHEET TITLE

SITE LIGHTING PLAN

SHEET NUMBER

E1.1.2

NOT ISSUED FOR CONSTRUCTION

2020-41-SDP

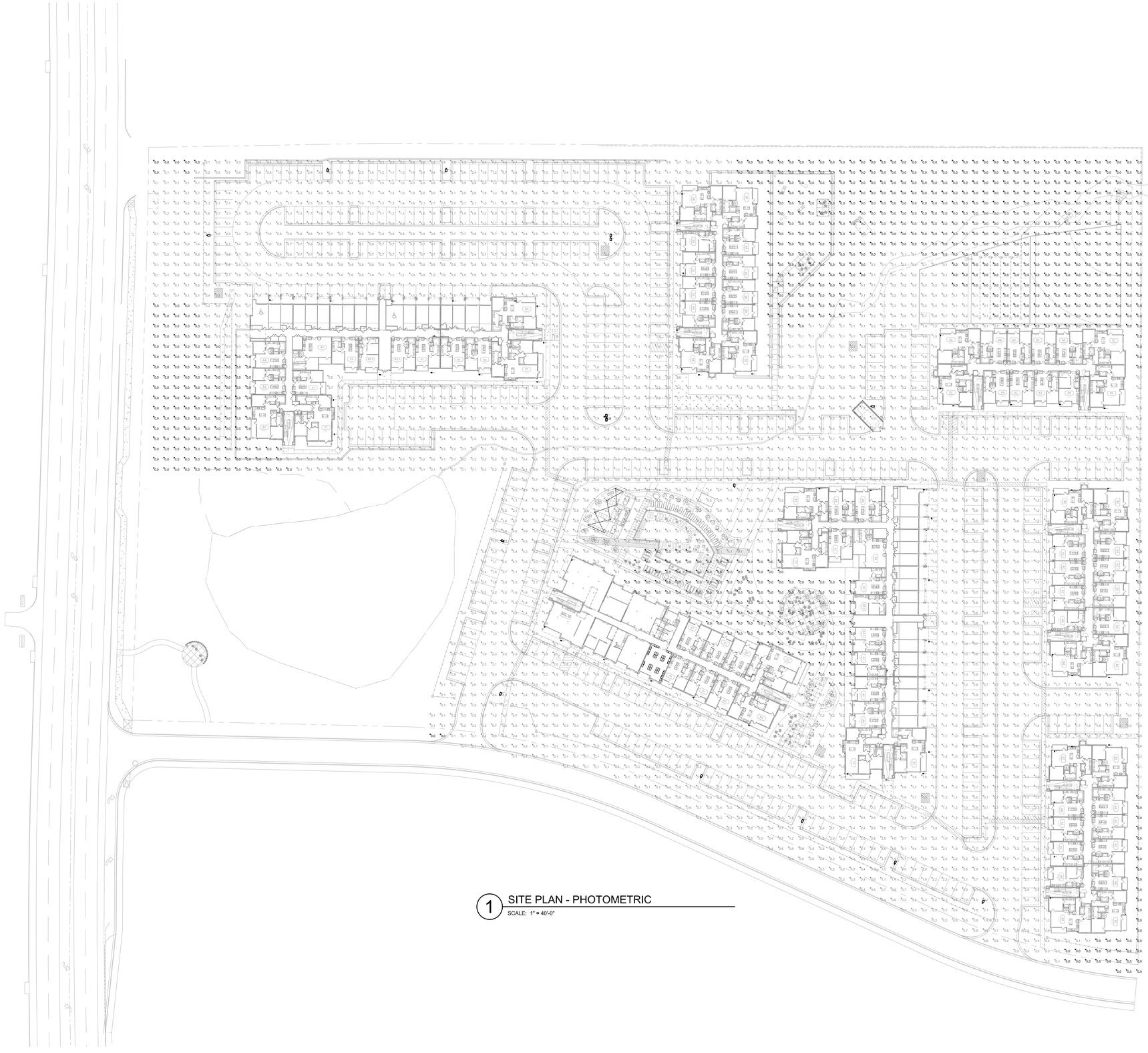

1 SITE PLAN - PHOTOMETRIC
SCALE: 1" = 40'-0"

GENERAL NOTES:

1. ALL LIGHTING FIXTURES SHALL BE DESIGNED SO THAT THE LIGHT SOURCE IS COMPLETELY CONCEALED, FULLY SHIELDED WITHIN OPAQUE HOUSING AND NOT VISIBLE FROM ANY STREET RIGHT-OF-WAY. THE CONE OF LIGHT SHALL NOT CROSS ANY ADJACENT PROPERTY LINE. THE ILLUMINATION SHALL NOT EXCEED 2-FOOT CANDLES AT THE HEIGHT OF THREE (3) FEET AT THE PROPERTY LINE. ONLY INCANDESCENT, FLUORESCENT, LIGHT-EMITTING DIODE (LED), COLOR-CORRECTED HIGH PRESSURE SODIUM OR METAL HALIDE MAY BE USED.
2. ROOF LIGHTING MAY NOT INCLUDE NAKED BULBS OR TUBING OR RUN ALONG THE HIGHEST PEAK OF THE ROOFLINE. ROOF LIGHTING THAT QUALIFIES AS SIGNAGE PER THE UDC IS PROHIBITED.

JSE
Jordan & Skala Engineers
17855 North Dallas Parkway • Suite 320
Dallas, TX. 75287
p. 469.385.1616 • f. 469.385.1615
Texas Registered Engineering Firm F-4990

STATE OF TEXAS
MARK N. BIGBIE
83876
LICENSED
PROFESSIONAL ENGINEER
8/27/20

THIS DRAWING IS THE PROPERTY OF JORDAN & SKALA ENGINEERS INC. AND IS NOT TO BE REPRODUCED IN WHOLE OR IN PART WITHOUT WRITTEN PERMISSION BY JORDAN & SKALA ENGINEERS.

ASCEND WESTINGHOUSE APTS.

GEORGETOWN, TEXAS

PRINT RECORD

DATE	ISSUED FOR
08/05/2020	DESIGN DEVELOPMENT

REVISIONS

#	DATE	DESCRIPTION
1	08/28/2020	SDP COMMENTS

Project Number: 2030071
Drawn By: JR Checked By: MJ

SHEET TITLE

PHOTOMETRIC PLAN

SHEET NUMBER

E1.1.3

SHEET 18 OF 76

NOT ISSUED FOR CONSTRUCTION

2020-41-SDP

Schedule

Symbol	Label	Image	QTY	Catalog Number	Description	Lamp	Number Lamps	Lumens per Lamp	LLF	Wattage	Polar Plot
	A		15	DSX1 LED P6 40K T4M MVOLT	DSX1 LED P6 40K T4M MVOLT	LED	1	18634	1	163	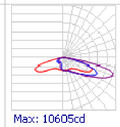 Max: 10605cd
	B		58	DSXW1 LED 20C 530 40K T4M MVOLT	DSXW1 LED WITH (2) 10 LED LIGHT ENGINES, TYPE T4M OPTIC, 4000K, @ 530mA.	LED	1	4201	1	34.9	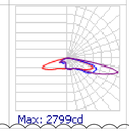 Max: 2799cd

1 REMOVED LIGHT FIXTURE C

Jordan & Skala Engineers
17855 North Dallas Parkway • Suite 320
Dallas, TX. 75287
p. 469.385.1616 • f. 469.385.1615
Texas Registered Engineering Firm F-4990

STATE OF TEXAS
MARK N. BIGBIE
83876
LICENSED
PROFESSIONAL ENGINEER
8/24/20

THIS DRAWING IS THE PROPERTY OF JORDAN & SKALA ENGINEERS INC. AND IS NOT TO BE REPRODUCED IN WHOLE OR IN PART WITHOUT WRITTEN PERMISSION BY JORDAN & SKALA ENGINEERS.

ASCEND WESTINGHOUSE APTS.
GEORGETOWN, TEXAS

PRINT RECORD

DATE	ISSUED FOR
08/05/2020	DESIGN DEVELOPMENT

REVISIONS

1	DATE	DESCRIPTION
1	08/28/2020	SDP COMMENTS

Project Number: 2030071

Drawn By: JR Checked By: MJ

SHEET TITLE

PHOTOMETRIC PLAN SCHEDULE

SHEET NUMBER

E1.1.4

NOT ISSUED FOR CONSTRUCTION

2020-41-SDP

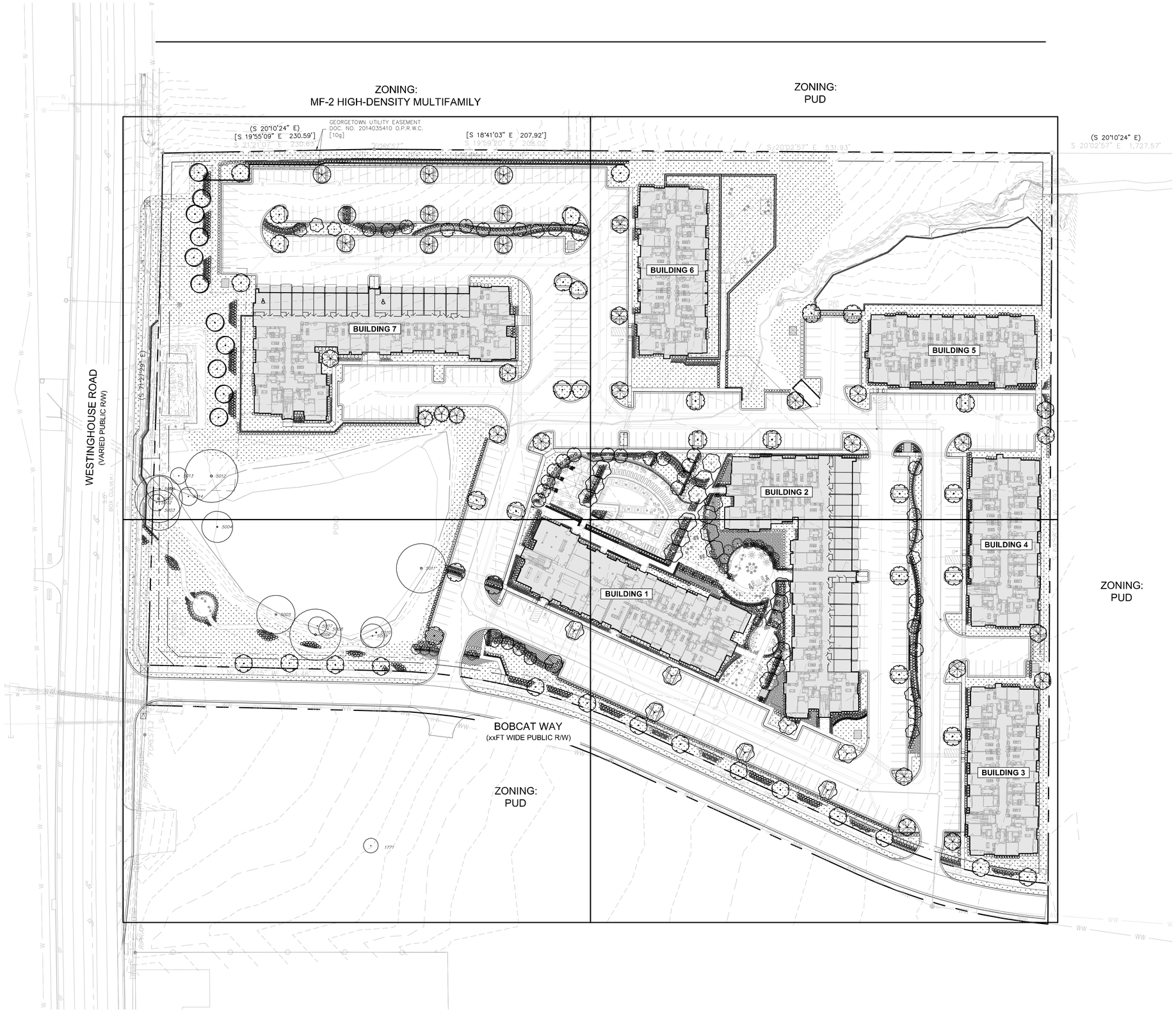

TEXAS811
CALL BEFORE YOU DIG!
TEXAS ONE-CALL CENTER
IT'S THE LAW!

LandDesign.
5301 ALPHA ROAD, SUITE 24
DALLAS, TX 75240
214.785.6009
WWW.LANDDESIGN.COM

CLIENT:

DHI COMMUNITIES
1341 HORTON CIRCLE
ARLINGTON, TX 76011
817.390.8200

KEY MAP

SEAL

PRELIMINARY
FOR REVIEW PURPOSES ONLY AND SHALL NOT BE USED FOR BIDDING, PERMITTING, OR CONSTRUCTION.

Matthew S. Vinten
Registered Landscape Architect of the State of TEXAS

Registration Number: 2946

I, Matthew Vinten, hereby certify that this Landscape Plan complies with the requirements of Chapter 8 of the Unified Development Code.

SITE DEVELOPMENT PLAN

PROJECT

ASCEND WESTINGHOUSE

GEORGETOWN, TEXAS

LANDDESIGN PROJ.#
8520004

REVISION / ISSUANCE

NO.	DESCRIPTION	DATE
	SITE DEVELOPMENT PLAN	07.20.2020
	SDP RESUBMITTAL	08.31.2020
	SDP RESUBMITTAL	09.21.2020

DESIGNED BY:
DRAWN BY:
CHECKED BY:

SCALE
VERT: N/A
HORZ: 1"=50'
0 25' 50' 100'

NORTH

SHEET TITLE

PLANTING PLAN OVERALL

SHEET NUMBER

L6-00

CITY CASE NUMBER: 2020-41-SDP
SHEET 20 OF 76

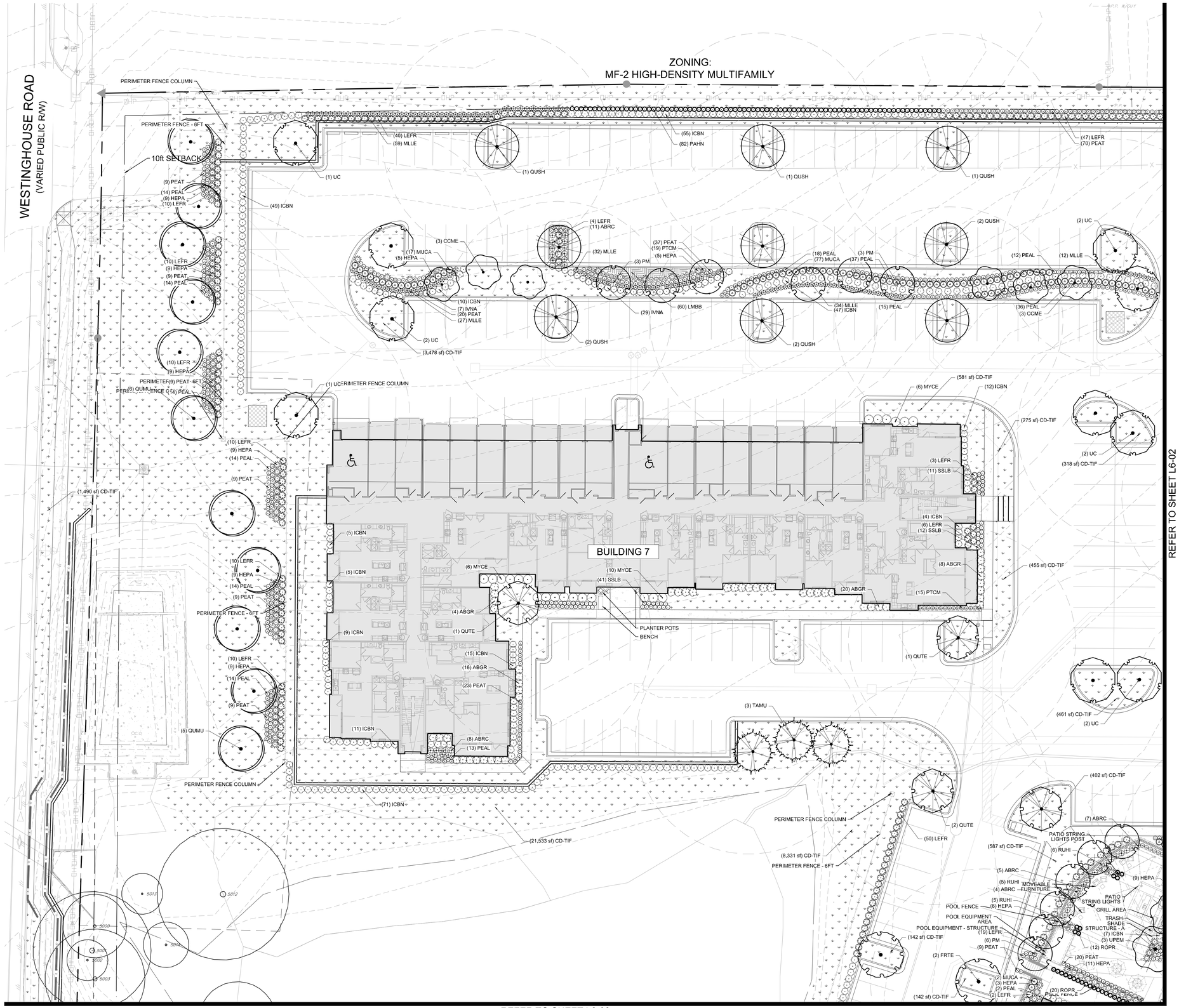

PLANT SCHEDULE		
TREES	CODE	BOTANICAL / COMMON NAME
	FRTE	Fraxinus texensis Texas Ash
	MAGR	Magnolia grandiflora Southern Magnolia
	MGLG	Magnolia grandiflora `Little Gem' Dwarf Southern Magnolia
	QUMU	Quercus muehlenbergii Chinkapin Oak
	QPMO	Quercus polymorpha `Monterey' Monterey Oak
	QUSH	Quercus shumardii Shumard Oak
	QUTE	Quercus texana Texas Red Oak
	TAMU	Taxodium mucronatum Mexican Bald Cypress
	UC	Ulmus crassifolia Cedar Elm
	UPEM	Ulmus parvifolia `Emer II' `Emer II' Allee Elm
ORNAMENTAL TREES	CODE	BOTANICAL / COMMON NAME
	CCME	Cercis canadensis var. mexicana Mexican Redbud
	LANA	Lagerstroemia x `Natchez' White Crape Myrtle Multi-Trunk
	PM	Prunus mexicana Mexican Plum
SHRUBS	CODE	BOTANICAL / COMMON NAME
	ABRC	Abelia x `Rose Creek' Rose Creek Abelia
	ABGR	Abelia x grandiflora `Edward Goucher' Glossy Abelia `Edward Goucher'
	AGAM	Agave americana Century Plant
	AGBB	Andropogon gerardii Big Bluestem
	HEPA	Hesperaloe parviflora Red Yucca
	ICBN	Ilex cornuta `Burfordii Nana' Dwarf Burford Holly
	IVNA	Ilex vomitoria `Nana' Dwarf Yaupon
	LEFR	Leucophyllum frutescens `Greado' Desperado Texas Sage
	LCPD	Loropetalum chinense `Purple Diamond' Fringe Flower
	MUCA	Muhlenbergia capillaris Pink Muhly
	MLLE	Muhlenbergia lindheimeri `Leni' Autumn Glow Muhly
	MYCE	Myrica cerifera Dwarf Wax Myrtle
	NTPT	Nassella tenuissima `Pony Tails' Mexican Feathergrass
	PVSG	Panicum virgatum Switch Grass
	PAHN	Pennisetum alopecuroides `Hameln' Hameln Dwarf Fountain Grass
	PEAL	Pennisetum alopecuroides `Piglet' Piglet Dwarf Fountain Grass
	PEAT	Perovskia atriplicifolia `Little Spire' Little Spire Russian Sage
	PTCM	Pittosporum tobira `Cream De Mint' TM Cream De Mint Dwarf Mock Orange
	ROPR	Rosmarinus officinalis `Prostratus' Dwarf Rosemary
	RUHI	Rudbeckia hirta Black-eyed Susan
	SR	Salvia regla Royal Sage
	SI	Salvia x `Indigo Spire' Sage
	SSLB	Schizachyrium scoparium Little Bluestem Grass
GROUND COVERS	CODE	BOTANICAL / COMMON NAME
	CD-TIF	Cynodon dactylon `Tif 419' Bermuda Grass
	LMBB	Liriope muscari `Big Blue' Big Blue Lilyturf
	SN	Seasonal Color Seasonal Color

TEXAS811
CALL BEFORE YOU DIG!
TEXAS ONE-CALL CENTER
IT'S THE LAW!

LandDesign.
5301 ALPHA ROAD, SUITE 24
DALLAS, TX 75240
214.785.6009
WWW.LANDDESIGN.COM

CLIENT:

DHI COMMUNITIES
1341 HORTON CIRCLE
ARLINGTON, TX 76011
817.390.8200

KEY MAP

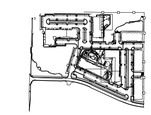

SEAL

PRELIMINARY
FOR REVIEW PURPOSES ONLY AND SHALL NOT BE USED FOR BIDDING, PERMITTING, OR CONSTRUCTION.

Matthew S. Vinten
Registered Landscape Architect of the State of TEXAS

Registration Number: 2946

I, Matthew Vinten, hereby certify that this Landscape Plan complies with the requirements of Chapter 8 of the Unified Development Code.

SITE DEVELOPMENT PLAN

PROJECT:

ASCEND WESTINGHOUSE

GEORGETOWN, TEXAS

LANDDESIGN PROJ.#
8520004

REVISION / ISSUANCE

NO.	DESCRIPTION	DATE
	SITE DEVELOPMENT PLAN	07.20.2020
	SDP RESUBMITTAL	08.31.2020
	SDP RESUBMITTAL	09.21.2020

DESIGNED BY:
DRAWN BY:
CHECKED BY:

SCALE
VERT: N/A
HORZ: 1"=20'
0 10' 20' 40'

NORTH

SHEET TITLE

PLANTING PLAN

SHEET NUMBER

L6-01

CITY CASE NUMBER: 2020-41-SDP
SHEET 22 OF 76

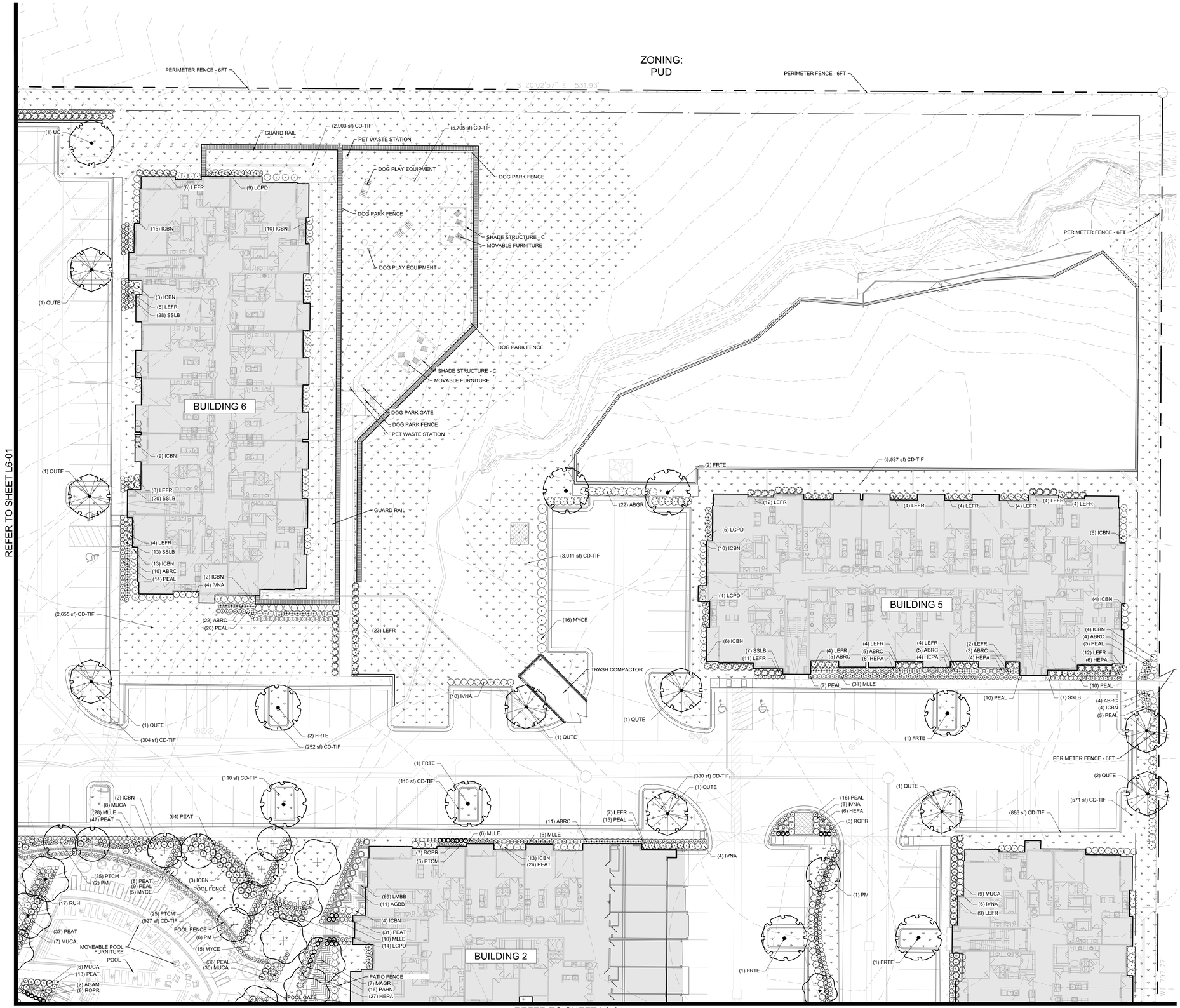

PLANT SCHEDULE

TREES	CODE	BOTANICAL / COMMON NAME
	FRTE	Fraxinus texensis Texas Ash
	MAGR	Magnolia grandiflora Southern Magnolia
	MGLG	Magnolia grandiflora `Little Gem' Dwarf Southern Magnolia
	QUMU	Quercus muehlenbergii Chinkapin Oak
	QPMO	Quercus polymorpha `Monterey' Monterey Oak
	QUSH	Quercus shumardii Shumard Oak
	QUTE	Quercus texana Texas Red Oak
	TAMU	Taxodium mucronatum Mexican Bald Cypress
	UC	Ulmus crassifolia Cedar Elm
	UPEM	Ulmus parvifolia `Emer II' `Emer II' Allee Elm
ORNAMENTAL TREES	**CODE**	**BOTANICAL / COMMON NAME**
	CCME	Cercis canadensis var. mexicana Mexican Redbud
	LANA	Lagerstroemia x `Natchez' White Crape Myrtle Multi-Trunk
	PM	Prunus mexicana Mexican Plum
SHRUBS	**CODE**	**BOTANICAL / COMMON NAME**
	ABRC	Abelia x `Rose Creek' Rose Creek Abelia
	ABGR	Abelia x grandiflora `Edward Goucher' Glossy Abelia `Edward Goucher'
	AGAM	Agave americana Century Plant
	AGBB	Andropogon gerardii Big Bluestem
	HEPA	Hesperaloe parviflora Red Yucca
	ICBN	Ilex cornuta `Burfordii Nana' Dwarf Burford Holly
	IVNA	Ilex vomitoria `Nana' Dwarf Yaupon
	LEFR	Leucophyllum frutescens `Greado' Desperado Texas Sage
	LCPD	Loropetalum chinense `Purple Diamond' Fringe Flower
	MUCA	Muhlenbergia capillaris Pink Muhly
	MLLE	Muhlenbergia lindheimeri `Leni' Autumn Glow Muhly
	MYCE	Myrica cerifera Dwarf Wax Myrtle
	NTPT	Nassella tenuissima `Pony Tails' Mexican Feathergrass
	PVSG	Panicum virgatum Switch Grass
	PAHN	Pennisetum alopecuroides `Hameln' Hameln Dwarf Fountain Grass
	PEAL	Pennisetum alopecuroides `Piglet' Piglet Dwarf Fountain Grass
	PEAT	Perovskia atriplicifolia `Little Spire' Little Spire Russian Sage
	PTCM	Pittosporum tobira `Cream De Mint' TM Cream De Mint Dwarf Mock Orange
	ROPR	Rosmarinus officinalis `Prostratus' Dwarf Rosemary
	RUHI	Rudbeckia hirta Black-eyed Susan
	SR	Salvia regla Royal Sage
	SI	Salvia x `Indigo Spire' Sage
	SSLB	Schizachyrium scoparium Little Bluestem Grass
GROUND COVERS	**CODE**	**BOTANICAL / COMMON NAME**
	CD-TIF	Cynodon dactylon `Tif 419' Bermuda Grass
	LMBB	Liriope muscari `Big Blue' Big Blue Lilyturf
	SN	Seasonal Color Seasonal Color

TEXAS811
CALL BEFORE YOU DIG!
TEXAS ONE-CALL CENTER
IT'S THE LAW!

LandDesign.
5301 ALPHA ROAD, SUITE 24
DALLAS, TX 75240
214.785.6009
WWW.LANDDESIGN.COM

CLIENT:

DHI COMMUNITIES
1341 HORTON CIRCLE
ARLINGTON, TX 76011
817.390.8200

KEY MAP

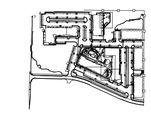

SEAL

PRELIMINARY
FOR REVIEW PURPOSES ONLY AND SHALL NOT BE USED FOR BIDDING, PERMITTING, OR CONSTRUCTION.

Matthew S. Vinten
Registered Landscape Architect of the State of TEXAS

Registration Number: 2946

I, Matthew Vinten, hereby certify that this Landscape Plan complies with the requirements of Chapter 8 of the Unified Development Code.

SITE DEVELOPMENT PLAN

PROJECT

ASCEND WESTINGHOUSE

GEORGETOWN, TEXAS

LANDDESIGN PROJ.#
8520004

REVISION / ISSUANCE

NO.	DESCRIPTION	DATE
	SITE DEVELOPMENT PLAN	07.20.2020
	SDP RESUBMITTAL	08.31.2020
	SDP RESUBMITTAL	09.21.2020

DESIGNED BY:
DRAWN BY:
CHECKED BY:

SCALE
VERT: N/A
HORZ: 1"=20'
0 10' 20' 40'

NORTH

SHEET TITLE

PLANTING PLAN

SHEET NUMBER

L6-02

CITY CASE NUMBER: 2020-41-SDP
SHEET 23 OF 76

REFER TO SHEET L6-01

REFER TO SHEET L6-04

PLANT SCHEDULE

TREES	CODE	BOTANICAL / COMMON NAME
	FRTE	Fraxinus texensis Texas Ash
	MAGR	Magnolia grandiflora Southern Magnolia
	MGLG	Magnolia grandiflora `Little Gem' Dwarf Southern Magnolia
	QUMU	Quercus muehlenbergii Chinkapin Oak
	QPMO	Quercus polymorpha `Monterey' Monterey Oak
	QUSH	Quercus shumardii Shumard Oak
	QUTE	Quercus texana Texas Red Oak
	TAMU	Taxodium mucronatum Mexican Bald Cypress
	UC	Ulmus crassifolia Cedar Elm
	UPEM	Ulmus parvifolia `Emer II' `Emer II' Allee Elm
ORNAMENTAL TREES	**CODE**	**BOTANICAL / COMMON NAME**
	CCME	Cercis canadensis var. mexicana Mexican Redbud
	LANA	Lagerstroemia x `Natchez' White Crape Myrtle Multi-Trunk
	PM	Prunus mexicana Mexican Plum
SHRUBS	**CODE**	**BOTANICAL / COMMON NAME**
	ABRC	Abelia x `Rose Creek' Rose Creek Abelia
	ABGR	Abelia x grandiflora `Edward Goucher' Glossy Abelia `Edward Goucher'
	AGAM	Agave americana Century Plant
	AGBB	Andropogon gerardii Big Bluestem
	HEPA	Hesperaloe parviflora Red Yucca
	ICBN	Ilex cornuta `Burfordii Nana' Dwarf Burford Holly
	IVNA	Ilex vomitoria `Nana' Dwarf Yaupon
	LEFR	Leucophyllum frutescens `Greado' Desperado Texas Sage
	LCPD	Loropetalum chinense `Purple Diamond' Fringe Flower
	MUCA	Muhlenbergia capillaris Pink Muhly
	MLLE	Muhlenbergia lindheimeri `Leni' Autumn Glow Muhly
	MYCE	Myrica cerifera Dwarf Wax Myrtle
	NTPT	Nassella tenuissima `Pony Tails' Mexican Feathergrass
	PVSG	Panicum virgatum Switch Grass
	PAHN	Pennisetum alopecuroides `Hameln' Hameln Dwarf Fountain Grass
	PEAL	Pennisetum alopecuroides `Piglet' Piglet Dwarf Fountain Grass
	PEAT	Perovskia atriplicifolia `Little Spire' Little Spire Russian Sage
	PTCM	Pittosporum tobira `Cream De Mint' TM Cream De Mint Dwarf Mock Orange
	ROPR	Rosmarinus officinalis `Prostratus' Dwarf Rosemary
	RUHI	Rudbeckia hirta Black-eyed Susan
	SR	Salvia regla Royal Sage
	SI	Salvia x `Indigo Spire' Sage
	SSLB	Schizachyrium scoparium Little Bluestem Grass
GROUND COVERS	**CODE**	**BOTANICAL / COMMON NAME**
	CD-TIF	Cynodon dactylon `Tif 419' Bermuda Grass
	LMBB	Liriope muscari `Big Blue' Big Blue Liyturf
	SN	Seasonal Color Seasonal Color

TEXAS811
CALL BEFORE YOU DIG!
TEXAS ONE-CALL CENTER
IT'S THE LAW!

LandDesign.
5301 ALPHA ROAD, SUITE 24
DALLAS, TX 75240
214.785.6009
WWW.LANDDESIGN.COM

CLIENT:

DHI COMMUNITIES
1341 HORTON CIRCLE
ARLINGTON, TX 76011
817.390.8200

KEY MAP

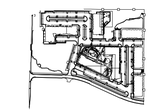

SEAL

PRELIMINARY
FOR REVIEW PURPOSES ONLY AND SHALL NOT BE USED FOR BIDDING, PERMITTING, OR CONSTRUCTION.

Matthew S. Vinten
Registered Landscape Architect of the State of TEXAS

Registration Number: 2946

I, Matthew Vinten, hereby certify that this Landscape Plan complies with the requirements of Chapter 8 of the Unified Development Code.

SITE DEVELOPMENT PLAN

PROJECT:

ASCEND WESTINGHOUSE

GEORGETOWN, TEXAS

LANDDESIGN PROJ.#
8520004

REVISION / ISSUANCE

NO.	DESCRIPTION	DATE
	SITE DEVELOPMENT PLAN	07.20.2020
	SDP RESUBMITTAL	08.31.2020
	SDP RESUBMITTAL	09.21.2020

DESIGNED BY:
DRAWN BY:
CHECKED BY:

SCALE
VERT: N/A
HORZ: 1"=20'
0 10' 20' 40'

NORTH

SHEET TITLE

PLANTING PLAN

SHEET NUMBER

L6-03

CITY CASE NUMBER: 2020-41-SDP
SHEET 24 OF 76

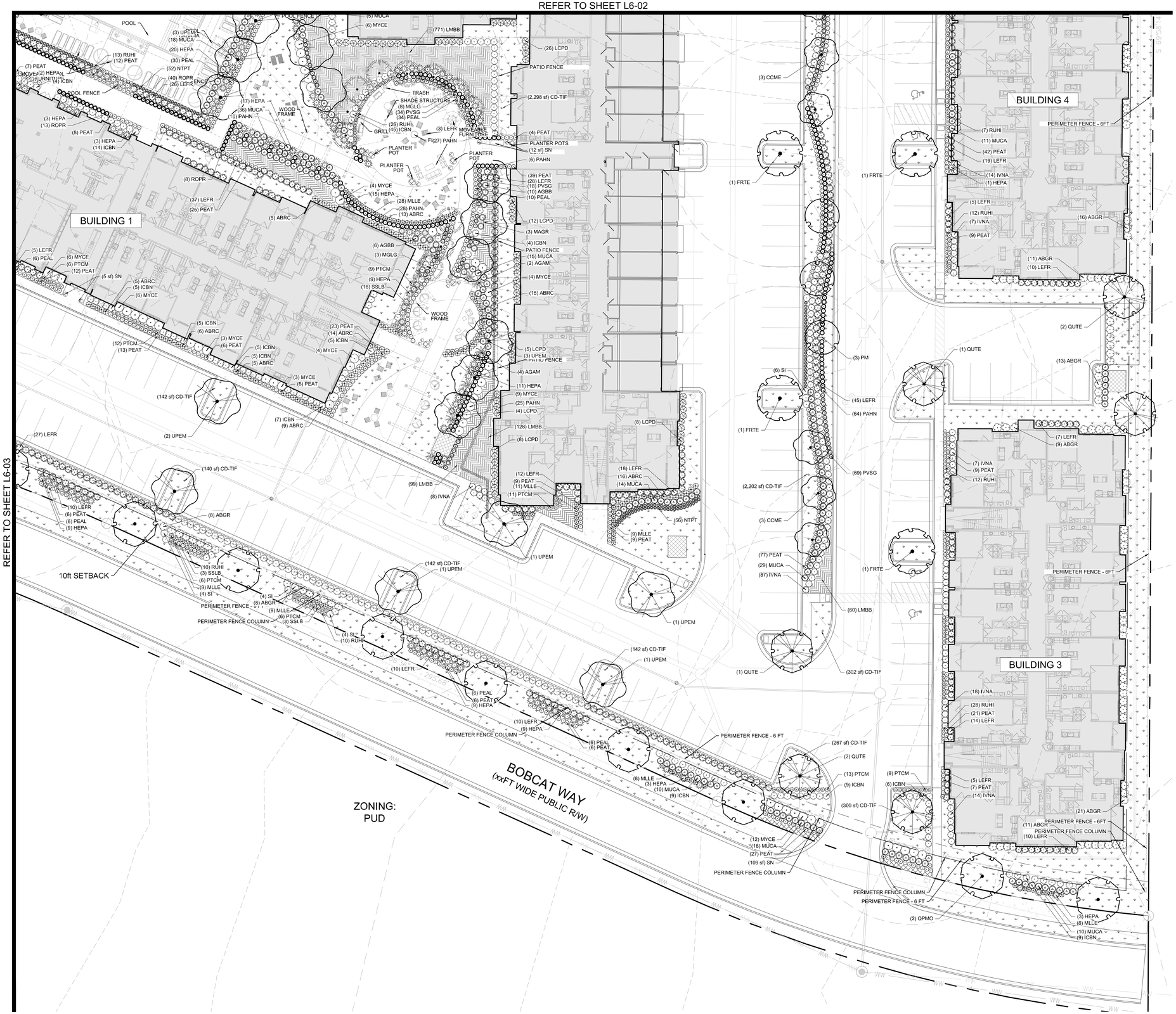

PLANT SCHEDULE

TREES	CODE	BOTANICAL / COMMON NAME
	FRTE	Fraxinus texensis Texas Ash
	MAGR	Magnolia grandiflora Southern Magnolia
	MGLG	Magnolia grandiflora 'Little Gem' Dwarf Southern Magnolia
	QUMU	Quercus muehlenbergii Chinkapin Oak
	QPMO	Quercus polymorpha 'Monterey' Monterey Oak
	QUSH	Quercus shumardii Shumard Oak
	QUTE	Quercus texana Texas Red Oak
	TAMU	Taxodium mucronatum Mexican Bald Cypress
	UC	Ulmus crassifolia Cedar Elm
	UPEM	Ulmus parvifolia 'Emer II' 'Emer II' Allee Elm
ORNAMENTAL TREES	**CODE**	**BOTANICAL / COMMON NAME**
	CCME	Cercis canadensis var. mexicana Mexican Redbud
	LANA	Lagerstroemia x 'Natchez' White Crape Myrtle Multi-Trunk
	PM	Prunus mexicana Mexican Plum
SHRUBS	**CODE**	**BOTANICAL / COMMON NAME**
	ABRC	Abelia x 'Rose Creek' Rose Creek Abelia
	ABGR	Abelia x grandiflora 'Edward Goucher' Glossy Abelia 'Edward Goucher'
	AGAM	Agave americana Century Plant
	AGBB	Andropogon gerardii Big Bluestem
	HEPA	Hesperaloe parviflora Red Yucca
	ICBN	Ilex cornuta 'Burfordii Nana' Dwarf Burford Holly
	IVNA	Ilex vomitoria 'Nana' Dwarf Yaupon
	LEFR	Leucophyllum frutescens 'Greado' Desperado Texas Sage
	LCPD	Loropetalum chinense 'Purple Diamond' Fringe Flower
	MUCA	Muhlenbergia capillaris Pink Muhly
	MLLE	Muhlenbergia lindheimeri 'Leni' Autumn Glow Muhly
	MYCE	Myrica cerifera Dwarf Wax Myrtle
	NTPT	Nassella tenuissima 'Pony Tails' Mexican Feathergrass
	PVSG	Panicum virgatum Switch Grass
	PAHN	Pennisetum alopecuroides 'Hameln' Hameln Dwarf Fountain Grass
	PEAL	Pennisetum alopecuroides 'Piglet' Piglet Dwarf Fountain Grass
	PEAT	Perovskia atriplicifolia 'Little Spire' Little Spire Russian Sage
	PTCM	Pittosporum tobira 'Cream De Mint' TM Cream De Mint Dwarf Mock Orange
	ROPR	Rosmarinus officinalis 'Prostratus' Dwarf Rosemary
	RUHI	Rudbeckia hirta Black-eyed Susan
	SR	Salvia regla Royal Sage
	SI	Salvia x 'Indigo Spire' Sage
	SSLB	Schizachyrium scoparium Little Bluestem Grass
GROUND COVERS	**CODE**	**BOTANICAL / COMMON NAME**
	CD-TIF	Cynodon dactylon 'Tif 419' Bermuda Grass
	LMBB	Liriope muscari 'Big Blue' Big Blue Liyturf
	SN	Seasonal Color Seasonal Color

TEXAS811
CALL BEFORE YOU DIG!
TEXAS ONE-CALL CENTER
IT'S THE LAW!

LandDesign.
5301 ALPHA ROAD, SUITE 24
DALLAS, TX 75240
214.785.6009
WWW.LANDDESIGN.COM

CLIENT:

DHI COMMUNITIES
1341 HORTON CIRCLE
ARLINGTON, TX 76011
817.390.8200

KEY MAP

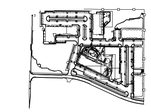

SEAL

PRELIMINARY
FOR REVIEW PURPOSES ONLY AND SHALL NOT BE USED FOR BIDDING, PERMITTING, OR CONSTRUCTION.

Matthew S. Vinten
Registered Landscape Architect of the State of TEXAS

Registration Number: 2946

I, Matthew Vinten, hereby certify that this Landscape Plan complies with the requirements of Chapter 8 of the Unified Development Code.

SITE DEVELOPMENT PLAN

PROJECT:

ASCEND WESTINGHOUSE

GEORGETOWN, TEXAS

LANDDESIGN PROJ.#
8520004

REVISION / ISSUANCE

NO.	DESCRIPTION	DATE
	SITE DEVELOPMENT PLAN	07.20.2020
	SDP RESUBMITTAL	08.31.2020
	SDP RESUBMITTAL	09.21.2020

DESIGNED BY:
DRAWN BY:
CHECKED BY:

SCALE
VERT: N/A
HORZ: 1"=20'
0 10' 20' 40'

NORTH

SHEET TITLE

PLANTING PLAN

SHEET NUMBER

L6-04

CITY CASE NUMBER: 2020-41-SDP
SHEET 25 OF 76

PLANT SCHEDULE

TREES	CODE	QTY	BOTANICAL / COMMON NAME	MIN. CONT.	MIN. CAL.	MIN. HT.
	FRTE	17	Fraxinus texensis / Texas Ash MATCHED SPECIMEN, STRONG CENTRAL LEADER	CONT.	3" CAL.	12'-14' HT.
	MAGR	10	Magnolia grandiflora / Southern Magnolia MATCHED SPECIMEN, STRONG CENTRAL LEADER	CONT.	3" CAL.	12'-14' HT.
	MGLG	15	Magnolia grandiflora `Little Gem` / Dwarf Southern Magnolia MATCHED SPECIMEN, STRONG CENTRAL LEADER	CONT.	3" CAL.	12'-14' HT.
	QUMU	11	Quercus muehlenbergii / Chinkapin Oak MATCHED SPECIMEN, STRONG CENTRAL LEADER	CONT.	3" CAL.	12'-14' HT.
	QPMO	14	Quercus polymorpha `Monterey` / Monterey Oak MATCHED SPECIMEN, STRONG CENTRAL LEADER	CONT.	3" CAL.	14'-16' HT.
	QUSH	9	Quercus shumardii / Shumard Oak MATCHED SPECIMEN, STRONG CENTRAL LEADER	CONT.	3" CAL.	12'-14' HT.
	QUTE	19	Quercus texana / Texas Red Oak MATCHED SPECIMEN, STRONG CENTRAL LEADER	CONT.	3" CAL.	12'-14' HT.
	TAMU	3	Taxodium mucronatum / Mexican Bald Cypress MATCHED SPECIMEN, STRONG CENTRAL LEADER	CONT.	3" CAL.	12'-14' HT.
	UC	11	Ulmus crassifolia / Cedar Elm MATCHED SPECIMEN, STRONG CENTRAL LEADER	CONT.	3" CAL.	10'-12' HT.
	UPEM	18	Ulmus parvifolia `Emer II` / `Emer II` Allee Elm MATCHED SPECIMEN, STRONG CENTRAL LEADER	CONT.	3" CAL.	12'-14' HT.
ORNAMENTAL TREES	CODE	QTY	BOTANICAL / COMMON NAME	MIN. CONT.	MIN. CAL.	MIN. HT.
	CCME	12	Cercis canadensis var. mexicana / Mexican Redbud MATCHED SPECIMEN, MULTI-STEM	CONT.	3" CAL.	8'-10' HT.
	LANA	3	Lagerstroemia x `Natchez` / White Crape Myrtle Multi-Trunk MATCHED SPECIMEN, MULTISTEM	CONT.	3" CAL.	10'-12' HT.
	PM	24	Prunus mexicana / Mexican Plum MATCHED SPECIMEN, STRONG CENTRAL LEADER	CONT.	3" CAL.	10'-12' HT.
SHRUBS	CODE	QTY	BOTANICAL / COMMON NAME	MIN. CONT.	SPACING	MIN. HT.
	ABRC	236	Abelia x `Rose Creek` / Rose Creek Abelia	3 GAL.		2' HT MIN.
	ABGR	191	Abelia x grandiflora `Edward Goucher` / Glossy Abelia `Edward Goucher`	5 GAL		1.5' HT MIN.
	AGAM	8	Agave americana / Century Plant	15 GAL.		5'-10' HT
	AGBB	27	Andropogon gerardii / Big Bluestem	2 GAL.		2' HT MIN.
	HEPA	347	Hesperaloe parviflora / Red Yucca	3 GAL.		2' HT MIN.
	ICBN	719	Ilex cornuta `Burfordii Nana` / Dwarf Burford Holly	5 GAL.		2.5' HT MIN.
	IVNA	262	Ilex vomitoria `Nana` / Dwarf Yaupon	3 GAL		2' HT MIN.
	LEFR	837	Leucophyllum frutescens `Greado` / Desperado Texas Sage	5 GAL		36" HT MIN.
	LCPD	95	Loropetalum chinense `Purple Diamond` / Fringe Flower	5 GAL.		2.5' HT MIN.
	MUCA	416	Muhlenbergia capillaris / Pink Muhly	3 GAL		2' HT MIN.
	MLLE	328	Muhlenbergia lincheimeri `Lenii` / Autumn Glow Muhly	1 GAL.		1' HT MIN.
	MYCE	122	Myrica cerifera / Dwarf Wax Myrtle	5 GAL.		2' HT MIN.
	NTPT	203	Nassella tenuissima `Pony Tails` / Mexican Feathergrass	1 GAL.		1' HT MIN.
	PVSG	152	Panicum virgatum / Switch Grass	1 GAL		12"-18" HT MIN.
	PAHN	285	Pennisetum alopecuroides `Hameln` / Hameln Dwarf Fountain Grass	1 GAL.		12"-18" HT MIN.
	PEAL	710	Pennisetum alopecuroides `Piglet` / Piglet Dwarf Fountain Grass	1 GAL.		10"-12" HT MIN.
	PEAT	958	Perovskia atriplicifolia `Little Spire` / Little Spire Russian Sage	1 GAL.		1.5' HT MIN.
	PTCM	203	Pittosporum tobira `Cream De Mint` TM / Cream De Mint Dwarf Mock Orange	3 GAL.		1.5' HT MIN.
	ROPR	112	Rosmarinus officinalis `Prostratus` / Dwarf Rosemary	1 GAL		1' HT MIN.
	RUHI	201	Rudbeckia hirta / Black-eyed Susan	1 GAL	2' O.C.	2' HT MIN.
	SI	14	Salvia x `Indigo Spire` / Sage	1 GAL	3' O.C.	2' HT MIN.
	SSLB	200	Schizachyrium scoparium / Little Bluestem Grass	1 GAL		10"-12" HT MIN.
GROUND COVERS	CODE	QTY	BOTANICAL / COMMON NAME	MIN. CONT.	SPACING	MIN. HT.
	CD-TIF	138,422 sf	Cynodon dactylon `Tif 419` / Bermuda Grass	SOD		
	LMBB	1,428	Liriope muscari `Big Blue` / Big Blue Lilyturf	1 GAL		1' HT MIN.
	SN	1,378 sf	Seasonal Color / Seasonal Color	4" POTS		

LANDSCAPE REQUIREMENT COMPLIANCE
CITY OF GEORGETOWN CHAPTER 8 - TREE PRESERVATION, LANDSCAPING AND FENCING
CITY OF GEORGETOWN, TEXAS

STREET YARD LANDSCAPING

WESTINGHOUSE ROAD

STANDARD	AREA (SQ FT)	REQUIRED	PROVIDED
10 trees and 30 shrubs per first 50,000 sf 1 tree and 3 shrubs per every additional 10,000 sf after	59,520 sq ft	11 trees, 33 shrubs	11 trees, 33 shrubs
landscape area = 20% of street yard area		11, 904 sf	11,904 sf

BOBCAT WAY

STANDARD	AREA (SQ FT)	REQUIRED	PROVIDED
10 trees and 30 shrubs per first 50,000 sf 1 tree and 3 shrubs per every additional 10,000 sf after	72,289 sq ft	13 trees, 39 shrubs	13 trees, 39 shrubs
landscape area = 20% of street yard area		14,458 sf	14,458 sf

PARKING LOT LANDSCAPING

LANDSCAPE AREA

STANDARD	NO. OF PARKING SPACES	REQUIRED	PROVIDED
10 sf per 1 space	451 SPACES	4,510 sf	4,510 sf
20 sf per 1 space	85 spaces	1,700 sf	1,700 sf

SHADE TREES

STANDARD	NO. OF PARKING SPACES	NO. OF EXCESS OF THE REQUIRED SPACES	REQUIRED	PROVIDED
1 tree per 12 parking spaces	536 spaces	.5 spaces	45 trees 1 tree	46 trees

BUFFERYARDS

RESIDENTIAL BUFFER

STANDARD	REQUIRED	PROVIDED
n/a	n/a	n/a

AMENITY AREAS

	REQUIRED	PROVIDED
	5 AMENITY SPACES	CLUB FITNESS POOL COURTYARD DOG PARK COMMUNITY GATHERING AREA

CITY OF GEORGETOWN LANDSCAPE PLAN NOTES:

1. THE CONVENTIONAL SYSTEM AND DRIP OR LEAKY-PIPE SYSTEM FOR IRRIGATION HAS BEEN SELECTED FOR THIS DEVELOPMENT.
2. A SEPARATE IRRIGATION PLAN SHALL BE PROVIDED AT THE TIME OF APPLICATION FOR A BUILDING PERMIT.
3. MAINTENANCE: THE CURRENT OWNER AND SUBSEQUENT OWNERS OF LANDSCAPE PROPERTY, OR THE MANAGER OF AGENT OS THE OWNER, SHALL BE RESPONSIBLE FOR THE MAINTENANCE OF ALL LANDSCAPED AREAS AND MATERIALS. REQUIRED BUFFER YARD AREAS AND MATERIALS AND REQUIRED SCREENING MATERIALS, SAID AREAS MUST BE MAINTAINED SO AS TO PRESENT A HEALTHY, NEAT AND ORDERLY APPEARANCE AT ALL TIMES AND SHALL BE KEPT FREE OF USED TO MEET THE REQUIREMENTS OF THE UDC. ALL SUCH PLANTS SHALL BE REPLACED WITHIN SIX MOUTHS OF NOTIFICATION, OR BY THE NEXT PLANTING SEASON, WHICHEVER COMES FIRST. A PROPERTY/ HOMEOWNERS ASSOCIATING MAY ASSUME RESPONSIBILITY FOR MAINTENANCE OF COMMON AREAS.
4. THIS LANDSCAPE PLAN HAS BEEN PREPARED AND CERTIFIED BY A LANDSCAPE ARCHITECT TO MEET ALL REQUIREMENTS OF THE CITY OF GEORGETOWN UNIFIED DEVELOPMENT CODE.
5. ALL PLANT SELECTIONS HAVE BEEN CHOSEN FROM THE CITY OF GEORGETOWN PREFERRED PLANT LIST.
6. NO MORE THAN 25% OF PLANTINGS HAVE BEEN SELECTED FROM ANY ONE SPECIES.
7. AT LEAST 50% OF THE REQUIRED PLANT MATERIALS ARE LOW WATER USERS AS IDENTIFIED ON THE PREFERRED PLANT LIST.

TEXAS811
CALL BEFORE YOU DIG!
TEXAS ONE-CALL CENTER
IT'S THE LAW!

LandDesign.
5301 ALPHA ROAD, SUITE 24
DALLAS, TX 75240
214.785.6009
WWW.LANDDESIGN.COM

CLIENT:
DHI COMMUNITIES
1341 HORTON CIRCLE
ARLINGTON, TX 76011
817.390.8200

KEY MAP

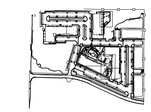

SEAL

PRELIMINARY
FOR REVIEW PURPOSES ONLY AND SHALL NOT BE USED FOR BIDDING, PERMITTING, OR CONSTRUCTION.

Matthew S. Vinten
Registered Landscape Architect of the State of TEXAS

Registration Number: 2946

I, Matthew Vinten, hereby certify that this Landscape Plan complies with the requirements of Chapter 8 of the Unified Development Code.

SITE DEVELOPMENT PLAN

PROJECT

ASCEND WESTINGHOUSE

GEORGETOWN, TEXAS

LANDDESIGN PROJ.#
8520004

REVISION / ISSUANCE

NO.	DESCRIPTION	DATE
	SITE DEVELOPMENT PLAN	07.20.2020
	SDP RESUBMITTAL	08.31.2020
	SDP RESUBMITTAL	09.21.2020

DESIGNED BY:
DRAWN BY:
CHECKED BY:

SCALE
VERT: N/A
HORZ: 1"=50'
0 25' 50' 100'

NORTH

SHEET TITLE
PLANTING SCHEDULE AND CALCULATIONS

SHEET NUMBER
L6-05

CITY CASE NUMBER: 2020-41-SDP
SHEET 29 OF 76

NOTE:
1. MIX IN BONE MEAL AT BOTTOM OF BULB WHEN PLANTED

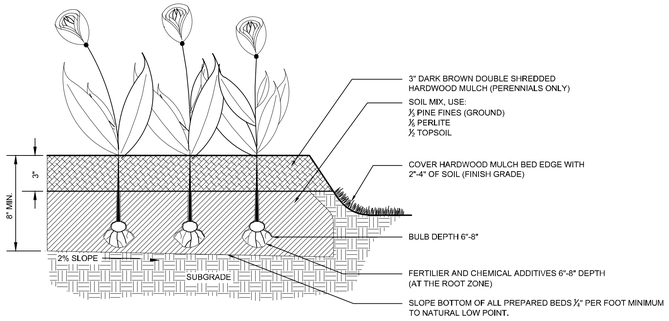

1 L6-06 PLANTING BED FOR ANNUALS AND PERENNIALS

SECTION — NTS

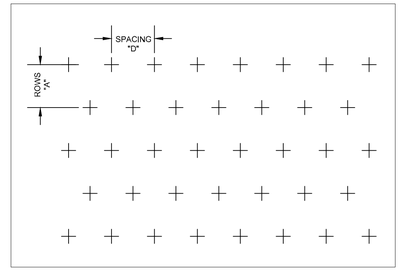

PLANT SPACING CHART

SPACING "D"	ROW "A"	PLANTS / S.F.
6" O.C.	5 3/16" O.C.	4.61
8" O.C.	6 15/16" O.C.	2.60
10" O.C.	8 2/3" O.C.	1.66
12" O.C.	10 3/8" O.C.	1.15
15" O.C.	13" O.C.	0.73
18" O.C.	15 9/16" O.C.	0.51
24" O.C.	20 13/16" O.C.	0.29

2 L6-06 TRIANGULAR SPACING FOR SHRUBS & GROUND COVERS

PLAN — NTS

NOTES:
1. LAYOUT PLANTS IN PREPARED BED AS SHOWN.
2. SPACING AS SPECIFIED, PER SCHEDULE STAGGERED ROWS.

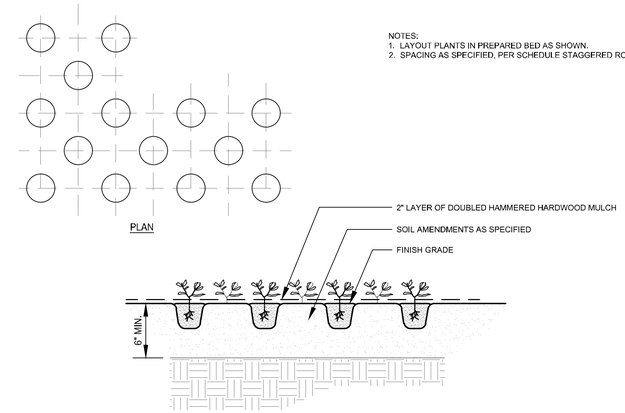

3 L6-06 GROUND COVER PLANTING

PLAN, SECTION — NTS

NOTES:
1. SCARIFY ROOT MASS OF CONTAINERIZED PLANT MATERIAL.
2. INSTALL CONTAINERIZED PLANTS AT FINISHED GRADE.
3. TAMP PLANTING MIX FIRMLY AS PIT IS FILLED AROUND EACH PLANT BALL.
4. OMIT COLLAR AROUND EACH SHRUB WHEN IRRIGATION SYSTEM IS PRESENT.
5. SOAK EACH PLANT BALL AND PIT IMMEDIATELY AFTER INSTALLATION.

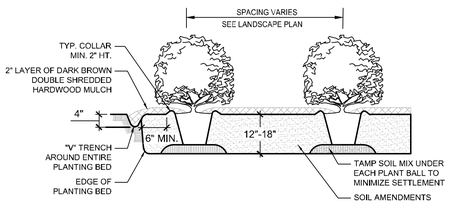

TYPICAL PLANTING BED DETAIL

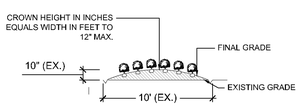

TYPICAL BED CROWNING

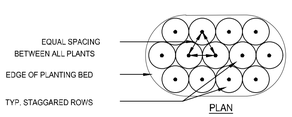

4 L6-06 SHRUB PLANTING BED

PLAN, SECTION — NTS

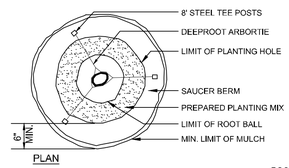

NOTES:
1. ALL TREES ARE TO BE NURSERY GROWN. ALL TREES TO BE BALL AND BURLAP (B&B) OR CONTAINER GROWN AS SPECIFIED IN SCHEDULE.
2. COMPLETELY REMOVE ALL TREATED OR PLASTIC-COATED BURLAP, CONTAINERS, STRAPPING WIRE, OR NYLON TWINE FROM ROOTBALL PRIOR TO PLANTING.
3. INSTALL TOP OF PLANT BALL EVEN WITH OR 1" ABOVE EXISTING GRADE.
4. SOAK ROOT BALL AND PLANT PIT IMMEDIATELY AFTER INSTALLATION.
5. SET TREE IN VERTICAL POSITION PRIOR TO STAKING.
6. ALL STAKING TO BE REMOVED AFTER ONE YEAR.
7. REMOVE EXCESS SOIL FROM SITE AND DISPOSE OF IN A LEGAL MANNER.
8. RESEED UNMULCHED, DISTURBED AREAS.
9. DO NOT COVER ROOT CROWN.

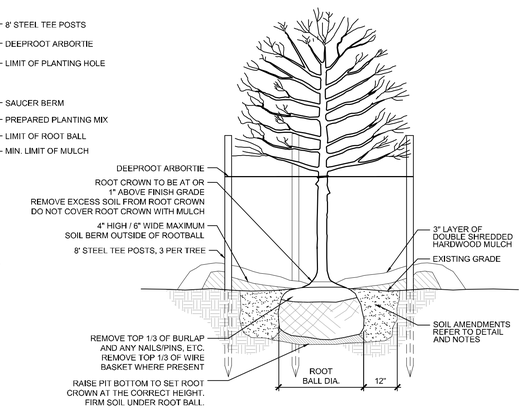

ALL TREES SHALL MEET AMERICAN STANDARD FOR NURSERY STOCK (ANSI Z60.1-2004)

FOR EXAMPLE:	CALIPER	HEIGHT (RANGE)	MAX. HEIGHT	MIN. ROOT BALL DIA.	MIN. ROOT BALL DEPTH
	2"	12-14'	18'	24"	16"
	3"	14-16'	18'	32"	21"

5 L6-06 TREE PLANTING

PLAN, SECTION — NTS

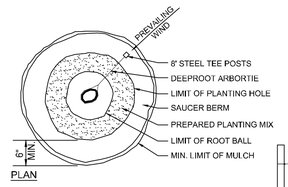

NOTES:
1. ALL TREES ARE TO BE NURSERY GROWN. ALL TREES TO BE BALL AND BURLAP (B&B) OR CONTAINER GROWN AS SPECIFIED IN SCHEDULE.
2. COMPLETELY REMOVE ALL TREATED OR PLASTIC-COATED BURLAP, CONTAINERS, STRAPPING WIRE, OR NYLON TWINE FROM ROOTBALL PRIOR TO PLANTING.
3. INSTALL TOP OF PLANT BALL EVEN WITH OR 1" ABOVE EXISTING GRADE.
4. SOAK ROOT BALL AND PLANT PIT IMMEDIATELY AFTER INSTALLATION.
5. SET TREE IN VERTICAL POSITION PRIOR TO STAKING.
6. ALL STAKING TO BE REMOVED AFTER ONE YEAR.
7. REMOVE EXCESS SOIL FROM SITE AND DISPOSE OF IN A LEGAL MANNER.
8. RESEED UNMULCHED, DISTURBED AREAS.
9. DO NOT COVER ROOT CROWN.

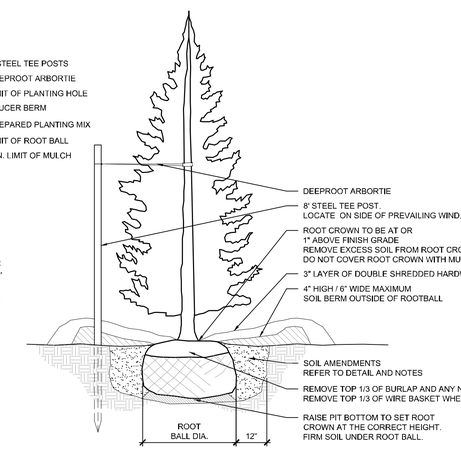

6 L6-06 EVERGREEN TREE PLANTING

PLAN, SECTION — NTS

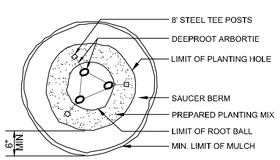

NOTES:
1. ALL TREES ARE TO BE NURSERY GROWN. ALL TREES TO BE BALL AND BURLAP (B&B) OR CONTAINER GROWN AS SPECIFIED IN SCHEDULE.
2. COMPLETELY REMOVE ALL TREATED OR PLASTIC-COATED BURLAP, CONTAINERS, STRAPPING WIRE, OR NYLON TWINE FROM ROOTBALL PRIOR TO PLANTING.
3. INSTALL TOP OF PLANT BALL EVEN WITH OR 1" ABOVE EXISTING GRADE.
4. SOAK ROOT BALL AND PLANT PIT IMMEDIATELY AFTER INSTALLATION.
5. SET TREE IN VERTICAL POSITION PRIOR TO STAKING.
6. ALL STAKING TO BE REMOVED AFTER ONE YEAR.
7. REMOVE EXCESS SOIL FROM SITE AND DISPOSE OF IN A LEGAL MANNER.
8. RESEED UNMULCHED, DISTURBED AREAS.
9. DO NOT COVER ROOT CROWN.

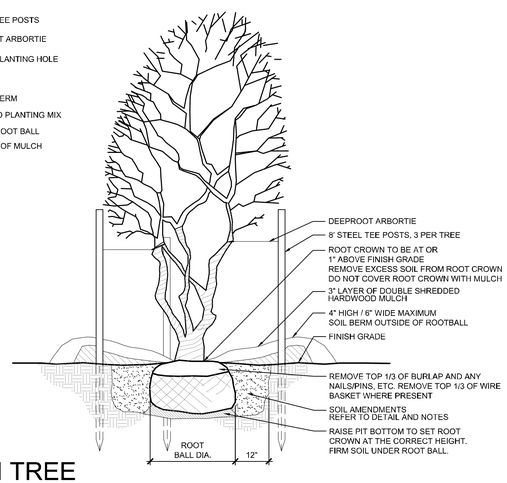

7 L6-06 MULTI-STEM TREE

PLAN, SECTION — NTS

NOTES:
1. ALL TREES ARE TO BE NURSERY GROWN. ALL TREES TO BE BALL AND BURLAP (B&B) OR CONTAINER GROWN AS SPECIFIED IN SCHEDULE.
2. COMPLETELY REMOVE ALL TREATED OR PLASTIC-COATED BURLAP, CONTAINERS, STRAPPING WIRE, OR NYLON TWINE FROM ROOTBALL PRIOR TO PLANTING.
3. INSTALL TOP OF PLANT BALL EVEN WITH OR 1" ABOVE EXISTING GRADE.
4. SOAK ROOT BALL AND PLANT PIT IMMEDIATELY AFTER INSTALLATION.
5. SET TREE IN VERTICAL POSITION PRIOR TO STAKING.
6. ALL STAKING TO BE REMOVED AFTER ONE YEAR.
7. REMOVE EXCESS SOIL FROM SITE AND DISPOSE OF IN A LEGAL MANNER.
8. RESEED UNMULCHED, DISTURBED AREAS.
9. DO NOT COVER ROOT CROWN.

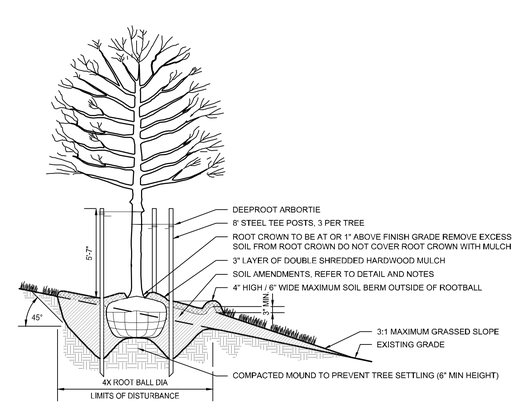

8 L6-06 TREE PLANTING ON SLOPE

SECTION — NTS

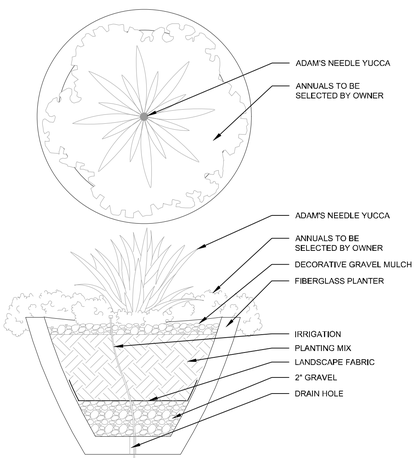

9 L6-06 TYPICAL PLANTER POT LAYOUT

PLAN, SECTION — NTS

LandDesign.
5301 ALPHA ROAD, SUITE 24
DALLAS, TX 75240
214.785.6009
WWW.LANDDESIGN.COM

CLIENT:
DHI COMMUNITIES
1341 HORTON CIRCLE
ARLINGTON, TX 76011
817.390.8200

KEY MAP

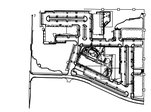

SEAL

PRELIMINARY
FOR REVIEW PURPOSES ONLY AND SHALL NOT BE USED FOR BIDDING, PERMITTING, OR CONSTRUCTION.

Matthew S. Vinten
Registered Landscape Architect of the State of TEXAS
Registration Number: 2946

I, Matthew Vinten, hereby certify that this Landscape Plan complies with the requirements of Chapter 8 of the Unified Development Code.

SITE DEVELOPMENT PLAN

PROJECT:

ASCEND WESTINGHOUSE

GEORGETOWN, TEXAS

LANDDESIGN PROJ.#
8520004

REVISION / ISSUANCE

NO.	DESCRIPTION	DATE
	SITE DEVELOPMENT PLAN	07.20.2020
	SDP RESUBMITTAL	08.31.2020
	SDP RESUBMITTAL	09.21.2020

DESIGNED BY:
DRAWN BY:
CHECKED BY:

SCALE — NORTH

VERT: N/A
HORZ: N/A

SHEET TITLE
PLANTING DETAILS

SHEET NUMBER
L6-06
CITY CASE NUMBER: 2020-41-SDP
SHEET 27 OF 76

MATERIALS

A. TOPSOIL

1. TOPSOIL SHALL HAVE A PH VALUE FROM 5.6 - 7.6 AND SHALL BE NATURAL FERTILE, (AGRICULTURAL SOIL, BROWN IN COLOR) UNIFORM FRIABLE LOAM WITHOUT ADMIXTURE OF SUBSOIL CONTAINING ORGANIC MATTER OF 5 PERCENT OR GREATER AND SHALL BE CAPABLE OF SUSTAINING VIGOROUS PLANT GROWTH.
2. ALL TOPSOIL SHALL PASS A 1 INCH SCREEN AND 40 PERCENT SHALL PASS THE 100 MESH SCREEN. IT SHALL BE FREE OF ANY ADD-MIXTURE OF SUBSOIL, AND CONTAIN NO STONES, LUMPS, CLODS OF HARD EARTH, SLAG, CIDERS, STICKS, PLANTS OR THEIR ROOTS, TRASH OR OTHER EXTRANEOUS MATERIALS.
3. TOPSOIL MUST ALSO BE FREE OF PLANT PARTS OF BERMUDA GRASS, QUACKGRASS, JOHNSONGRASS, NUTSEDGE, POISON IVY, CANADA THISTLE, OR ANY NOXIOUS WEEDS AND SHALL NOT BE CONTAMINATED WITH ANY SUBSTANCE KNOWN HARMFUL TO THE GROWTH OF PLANTS OR HUMANS.
4. TOPSOIL SHALL NOT BE USED FOR PLANTING OPERATIONS WHILE IN A FROZEN OR MUDDY CONDITION.
5. TOPSOIL SOURCES SHALL BE TESTED BY A RECOGNIZED LABORATORY AT THE EXPENSE OF THE CONTRACTOR FOR PH. SOIL TEXTURE AND SOLUBLE SALTS. SALINITY SHALL NOT EXCEED 3 MILS PER CENTIMETER AT 25 DEGREES C AS DETERMINED BY SATURATED SOIL PASTE METHOD AS DESCRIBED IN USDA CIRCULAR #982. TEST RESULTS MUST BE PRESENTED IN WRITING TO THE LANDSCAPE ARCHITECT OR OWNER PRIOR TO PLACEMENT OF TOPSOIL ON SITE.
6. CONTRACTOR SHALL ASSUME RESPONSIBILITY FOR CONTROL OF NOXIOUS OR INVASIVE SPECIES INTRODUCED BY CONTAMINATED TOPSOIL.
7. TOPSOIL THAT HAS BEEN STOCKPILED FOR A LONG PERIODS SHALL BE INOCULATED TO REESTABLISH ITS MICROBIAL ACTIVITY.

B. MULCH

SHALL BE FREE OF DEBRIS AND WOOD CHIPS. IT SHALL CONSIST OF AGED DOUBLE-SHREDDED HARDWOOD, FREE OF EXCESS TANNIC ACID OR OTHER MULCH AS SPECIFIED ON THE PLANS. A SAMPLE OF MULCH SHALL BE PROVIDED FOR THE GROUNDS SUPERINTENDENT'S APPROVAL PRIOR TO DELIVERING THE MULCH. THE OWNER RESERVES THE RIGHT TO REJECT ANY MULCH WHICH IS CONSIDERED TO BE UNSUITABLE. ALL MULCHES SHALL BE FREE OF ANY FOREIGN MATERIALS, PIECES LARGER THAN 3 INCHES, AND/OR GREEN WOOD.

C. DOLOMITE LIME

SHALL BE FINELY GROUND OR PULVERIZED RAW, COMMERCIAL GRADE LIMESTONE MEETING ASTM C51 AND CONTAINING NOT LESS THAN 85 PERCENT TOTAL OF CALCIUM MAGNESIUM CARBONATE, FREE OF IMPURITIES, ALL OF WHICH SHALL PASS THROUGH A NUMBER 10 SIEVE AND AT LEAST 50 PERCENT SHALL PASS THROUGH A NUMBER 100 SIEVE.

D. SAND

SHALL BE CLEAN, WASHED, COARSE, MASONRY SAND, RIVER SAND, OR NUMBER 2 BUILDERS SAND MEETING ASTM C 33. A QUART SAMPLE OF THE PROPOSED SAND SHALL BE SUBMITTED FOR THE OWNER'S APPROVAL

E. SULFUR

SULFUR SHALL BE A COMMERCIALLY PRODUCED, GRANULAR PRODUCT OF PURE SULFUR

F. GYPSUM

GYPSUM SHALL BE GROUND TO THE SIZE SPECIFIED ON THE PLANS

G. TRACE ELEMENTS

SHALL BE ADDED AS REQUIRED BY SOILS TEST .

H. LEAF MOLD SHALL BE COMPOSTED LEAF MATERIAL, FREE OF NOXIOUS WEEDS AND DETRIMENTAL INSECTS.

I. COMMERCIAL FERTILIZER

TO MEET FED. SPECIFICATION O-F-241 TYPE 1 GRADE NOTED, LEVEL B. THE FERTILIZER SHALL BE GRANULAR UNLESS PACKETS, TABLETS, OR STAKES TO BE USED WITH MINIMUM OF 50 PERCENT OF TOTAL NITROGEN IN ORGANIC FORM WITH NO CYANAMID COMPOUNDS OR HYDRATED LIME MIXES TO BE ADDED OR FOUND IN THE FERTILIZER.

J. OTHER ACCEPTABLE FERTILIZER FORMS:

1. FOR TREES
   ANUTRI-PAK
   JRP INTN=L. INC.
   17 FOREST AVENUE
   FOND DU LAC, WISCONSIN 54935
2. AJOBES, PLANT SPIKES - FOR TREES AND SHRUBS.
3. ALAWN PRO OR SIMILAR APPROVED SLOW RELEASE FERTILIZER FOR LAWNS WITH THE FOLLOWING RATIO:
   3 NITROGEN
   1 PHOSPHORIC ACID
   2 POTASH
4. AHOLLY-TONE OR SIMILAR APPROVED WITH CHELATED IRON FOR EVERGREEN PLANTS.

K. PEAT

1. SHALL CONFORM TO FEDERAL SPECIFICATION Q-P-166C. PEAT MOSS; PEAT HUMUS; AND PEAT, REED-SEDGE.
2. SHALL BE LOW IN WOODY MATERIAL AND FREE OF MINERAL OR OTHER MATERIAL HARMFUL TO PLANT LIFE.
3. THE MIN. ORGANIC CONTENT TO BE APPROX. 90% WITH ACID REACTION FROM 4-5 PH, AND MOISTURE ABSORPTIVE CAPACITY NOT LESS THAN 450 PERCENT.
4. HUMUS TO BE SHREDDED, DRIED AND STERILIZED TO PASS 1/4 INCH SCREEN.
5. MOSS SHALL BE PULVERIZED AND HORTICULTURAL GRADE SPHAGNUM MOSS FREE OF EXTRANEOUS OR HARMFUL MATERIAL.
6. TO BE FINELY MILLED BLACK MICHIGAN PEAT OR OTHER SIMILAR APPROVED.

L. MANURE

1. SHALL BE WELL-ROTTED HORSE OR COW (OR COMBINATION THEREOF) MANURE. NOT TO CONTAIN OVER 25% STRAW OR LITTER, IT SHALL BE FREE OF FRESH MANURE, SAWDUST, WOOD CHIPS, LEATHER CHIPS, TAN BARK, LONG STRAW, SOFT HAY, STONES, FOREIGN INJURIOUS SUBSTANCES OR CHEMICALS USED TO HASTEN DECOMPOSITION.
2. TO BE TWO YEARS OLD MAXIMUM, NINE MONTHS MINIMUM WITH MINIMUM OF THREE TURNINGS WITHIN THIS TIME PERIOD.
3. NO BURNED OR FIRE-FANGED MANURE WILL BE ACCEPTABLE.

M. SOIL AMENDMENTS

DIATOMACEOUS EARTH SOIL AMENDMENT CONSISTING OF SILICA, ALUMINA, IRON OXIDE AND SHALL HAVE 0.1 TO 1 MICRON PORE SIZE, WITH A MINIMUM OF 113 PERCENT WATER ABSORPTION, MAXIMUM 19 PERCENT LOSS SULPHATE SOUNDNESS, 80 PERCENT TOTAL POROSITY. A TOTAL OF 54 PERCENT TO PASS 10 MESH SCREEN, 98 PERCENT TO PASS 80 MESH SCREEN.

1 SOIL AMENDMENTS
L6-07

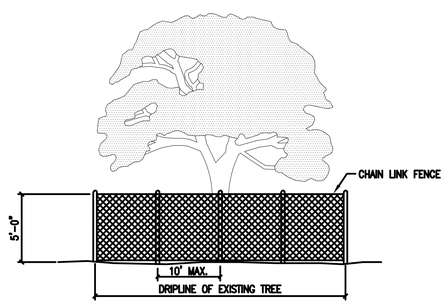

NOTES:

1. TREE PROTECTION FENCES SHALL BE INSTALLED PRIOR TO THE COMMENCEMENT OF ANY SITE PREPARATION WORK (CLEARING, GRUBBING OR GRADING).
2. FENCES SHALL COMPLETELY SURROUND THE TREE, OR CLUSTERS OF TREES; WILL BE LOCATED AT THE OUTERMOST LIMIT OF THE TREE BRANCHES (DRIPLINE), AND WILL BE MAINTAINED THROUGHOUT THE CONSTRUCTION PROJECT IN ORDER TO PREVENT THE FOLLOWING:
   A. SOIL COMPACTION IN THE ROOT ZONE AREA RESULTING FROM VEHICULAR TRAFFIC, OR STORAGE OF EQUIPMENT OR MATERIALS.
   B. ROOT ZONE DISTURBANCES DUE TO GRADE CHANGES (GREATER THAN SIX INCHES (6") CUT OR FILL, OR TRENCHING NOT REVIEWED AND AUTHORIZED BY THE CITY.
   C. WOUNDS TO EXPOSED ROOTS, TRUNKS OR LIMBS BY MECHANICAL EQUIPMENT.
   D. OTHER ACTIVITIES DETRIMENTAL TO TREES, SUCH AS CHEMICAL STORAGE, CEMENT TRUCK CLEANING AND FIRE.
3. EXCEPTIONS TO INSTALLING FENCES AT TREE DRIPLINES MAY BE PERMITTED IN THE FOLLOWING CASES:
   A. WHERE PERMEABLE PAVING IS TO BE INSTALLED, ERECT THE FENCE AT THE OUTER LIMITS OF THE PERMEABLE PAVING AREA.
   B. WHERE TREES ARE CLOSE TO PROPOSED BUILDINGS, ERECT THE FENCE NO CLOSER THAN SIX FEET (6'-0") TO BUILDING.

The Architect/Engineer assumes responsibility for appropriate use of this standard.

GEORGETOWN TEXAS	CITY OF GEORGETOWN CONSTRUCTION STANDARDS AND DETAILS TREE PROTECTION – CHAIN LINK FENCE	ADOPTED 6/21/2006 EC09 NTS / 1/2003 MRS / TRB

2 TREE PROTECTION FENCE
L6-07

NOT TO SCALE

LandDesign.
5301 ALPHA ROAD, SUITE 24
DALLAS, TX 75240
214.785.6009
WWW.LANDDESIGN.COM

CLIENT:

DHI COMMUNITIES
1341 HORTON CIRCLE
ARLINGTON, TX 76011
817.390.8200

KEY MAP

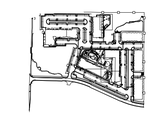

SEAL

PRELIMINARY
FOR REVIEW PURPOSES ONLY AND SHALL NOT BE USED FOR BIDDING, PERMITTING, OR CONSTRUCTION.

Matthew S. Vinten
Registered Landscape Architect of the State of TEXAS

Registration Number: 2946

I, Matthew Vinten, hereby certify that this Landscape Plan complies with the requirements of Chapter 8 of the Unified Development Code.

SITE DEVELOPMENT PLAN

PROJECT

ASCEND WESTINGHOUSE

GEORGETOWN, TEXAS

LANDDESIGN PROJ.#
8520004

REVISION / ISSUANCE

NO.	DESCRIPTION	DATE
	SITE DEVELOPMENT PLAN	07.20.2020
	SDP RESUBMITTAL	08.31.2020
	SDP RESUBMITTAL	09.21.2020

DESIGNED BY:
DRAWN BY:
CHECKED BY:

SCALE NORTH

VERT: N/A
HORZ: N/A

SHEET TITLE

PLANTING DETAILS

SHEET NUMBER

L6-07
CITY CASE NUMBER: 2020-41-SDP
SHEET 28 OF 76

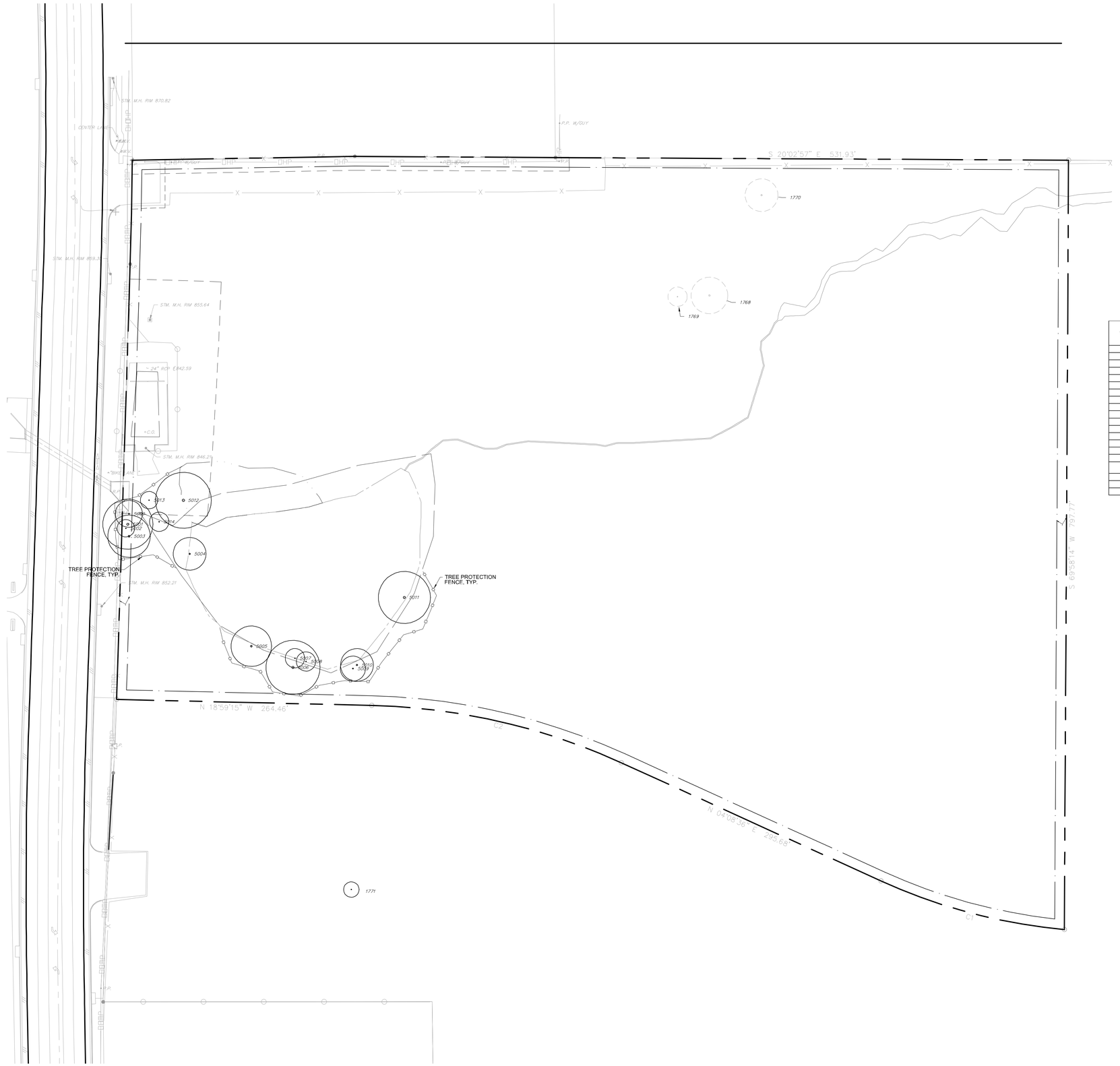

TREE SURVEY LEGEND:

TAG# — NON-PROTECTED TREE TO BE REMOVED - NO MITIGATION REQUIRED

TAG# — PROTECTED TREE TO REMAIN

GENERAL NOTES:

1. ORIGINAL TREE SURVEY INFORMATION AND ON-SITE DOCUMENTATION PROVIDED BY BGE, INC DATED AUGUST 2019. REFER TO CIVIL SURVEY AND ALL ASSOCIATED DOCUMENTATION FOR ADDITIONAL INFORMATION.
2. SHEETS L6-08 PRODUCED BY LANDDESIGN ARE FOR CONVEYING THE TREE PRESERVATION ORDINANCE REQUIREMENTS ONLY, BASED ON THE TREE SURVEY INFORMATION PROVIDED BY BGE, INC AND CURRENT SITE PLAN SHOWN.
3. THIS PLAN IS PRELIMINARY AND SUBJECT TO CHANGE AND WILL BE FINALIZED DURING THE PERMITTING PROCESS BASED ON FINAL SITE PLAN AND GRADING PLANS.

TREE SURVEY SUMMARY:

SITE AREA: 14.5 ACRES

TOTAL PROTECTED TREES: 15 TREES

TREE DENSITY: 15 TREES / 14.5 ACRES = 1.03 TREE/ACRE
Total # of Protected Trees ÷ Total Acreage = Tree Density

REQUIRED TREE TO REMAIN ON-SITE: 1.03 x .3 = .3 (1 TREE)
TREE DENSITY x 30%

TREE #	DHB	TREES WITH MULTIPLE TRUNKS	SPECIES	HALF CRITICAL ROOT ZONE (IN FEET)	STATUS	CLASSIFICATION
1768	19		CEDAR	9.5'	TO BE REMOVED	NOT PROTECTED
1769	10		CEDAR	5"	TO BE REMOVED	NOT PROTECTED
1770	17	(13-8")	CEDAR	8.5'	TO BE REMOVED	NOT PROTECTED
1771	8		HACKBERRY	4'	TO REMAIN	OFF-SITE
5000	14		BLACK WILLOW	7'	TO REMAIN	PROTECTED
5001	26	(12-12-10-6")	BLACK WILLOW	13'	TO REMAIN	PROTECTED
5002	9	(7-3")	BLACK WILLOW	4.5'	TO REMAIN	PROTECTED
5003	22	(15-14")	BLACK WILLOW	11'	TO REMAIN	PROTECTED
5004	17	(13-8")	BLACK WILLOW	8.5'	TO REMAIN	PROTECTED
5005	21	(11-10-4-3-2")	BLACK WILLOW	10.5'	TO REMAIN	PROTECTED
5006	28	(20-15")	BLACK WILLOW	14'	TO REMAIN	PROTECTED
5007	10		BLACK WILLOW	5'	TO REMAIN	PROTECTED
5008	10		BLACK WILLOW	5'	TO REMAIN	PROTECTED
5009	13		BLACK WILLOW	6.5'	TO REMAIN	PROTECTED
5010	17	(8-7-4-3-3")	BLACK WILLOW	8.5'	TO REMAIN	PROTECTED
5011	27	(15-10-5-3-3")	BLACK WILLOW	13.5'	TO REMAIN	PROTECTED
5012	29	(13-13-11-8") LAID OVER, HAS GIRDLE	BLACK WILLOW	14.5'	TO REMAIN	PROTECTED
5013	9	(5-4-3")	BLACK WILLOW	4.5'	TO REMAIN	PROTECTED
5014	10	(5-5-4")	BLACK WILLOW	5'	TO REMAIN	PROTECTED

Tree Mitigation Summary Template

Tree Mitigation Summary
Required Protected Tree Preservation Percentage (UDC Sec. 8.02.030.E) **Percentage of Protected Trees that must be retained on site (not applicable to residential subdivisions or Heritage Trees)** Project acreage: 14.5 Total number of Protected Trees existing on-site: 15 Average number of protected trees per acre: 1.03 Applicable Required Protected Tree Preservation percentage: 30% Number of existing protected trees to remain on-site: 15
Owed Mitigation for Protected Removals Overall protected tree mitigation inches owed: N/A
Credit Trees – On-Site Planted Trees Inches of shade trees planted on-site: xx
Credit Trees – On-Site Existing Trees (6-11" trees only) **May count for up to 75% of overall required Protected Tree mitigation inches (does not count towards Heritage Tree mitigation)** Note: Credit trees count tree per tree toward landscape requirement tree replacements not in inches Maximum available on site credit tree discount: N/A Number of on-site credit trees available for maximum discount: N/A
Soil Aeration & Supplemental Nutrients Credit – Up To 30% **Must provide Fiscal Surety before Certificate of Occupancy may be issued** Maximum inches that can count towards soil aeration & supplemental nutrient credit: N/A Maximum soil aeration or supplemental nutrient payment: N/A Total inches used for soil aeration or supplemental nutrient: N/A
Owed Mitigation for Heritage Tree Removals Overall Heritage Tree mitigation inches owed: N/A Number of three-inch trees owed: N/A
Cash Payout **Goes into the Tree Fund for both Protected and Heritage Trees** Amount owed by fee-in-lieu: N/A Protected Tree fee-in-lieu payment: N/A Heritage Tree fee-in-lieu payment: N/A

TEXAS811
CALL BEFORE YOU DIG!
TEXAS ONE-CALL CENTER
IT'S THE LAW!

LandDesign.
5301 ALPHA ROAD, SUITE 24
DALLAS, TX 75240
214.785.6009
WWW.LANDDESIGN.COM

CLIENT:
DHI COMMUNITIES
1341 HORTON CIRCLE
ARLINGTON, TX 76011
817.390.8200

KEY MAP

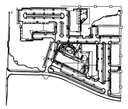

SEAL

PRELIMINARY
FOR REVIEW PURPOSES ONLY AND SHALL NOT BE USED FOR BIDDING, PERMITTING, OR CONSTRUCTION.

Matthew S. Vinten
Registered Landscape Architect of the State of TEXAS
Registration Number: 2946

I, Matthew Vinten, hereby certify that this Landscape Plan complies with the requirements of Chapter 8 of the Unified Development Code.

SITE DEVELOPMENT PLAN

PROJECT:

ASCEND WESTINGHOUSE

GEORGETOWN, TEXAS

LANDDESIGN PROJ.#
8520004

REVISION / ISSUANCE

NO.	DESCRIPTION	DATE
	SITE DEVELOPMENT PLAN	07.20.2020
	SDP RESUBMITTAL	08.31.2020
	SDP RESUBMITTAL	09.21.2020

DESIGNED BY:
DRAWN BY:
CHECKED BY:

SCALE
VERT: N/A
HORZ: 1"=50'
0 25' 50' 100'

NORTH

SHEET TITLE
TREE PRESERVATION PLAN

SHEET NUMBER
L6-08
CITY CASE NUMBER: 2020-41-SDP
SHEET 29 OF 76

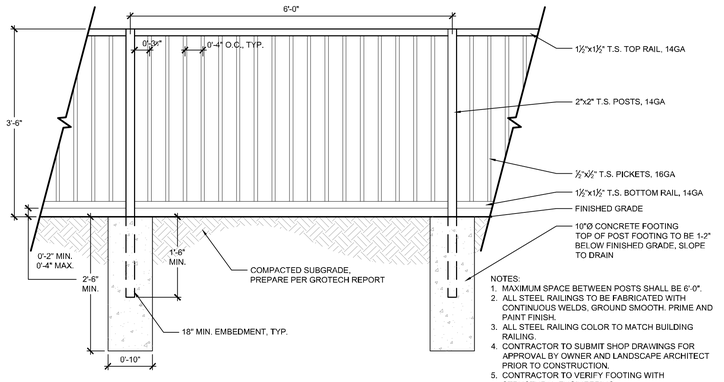

NOTES:
1. MAXIMUM SPACE BETWEEN POSTS SHALL BE 6'-0".
2. ALL STEEL RAILINGS TO BE FABRICATED WITH CONTINUOUS WELDS, GROUND SMOOTH. PRIME AND PAINT FINISH.
3. ALL STEEL RAILING COLOR TO MATCH BUILDING RAILING.
4. CONTRACTOR TO SUBMIT SHOP DRAWINGS FOR APPROVAL BY OWNER AND LANDSCAPE ARCHITECT PRIOR TO CONSTRUCTION.
5. CONTRACTOR TO VERIFY FOOTING WITH STRUCTURAL ENGINEERING.
6. GAP BETWEEN TERMINAL POSTS AND BUILDING WHERE FENCE ABUTS BUILDING SHALL BE 2" MAXIMUM.
7. REFER TO MATERIALS PLAN FOR PATIO FENCE LOCATION.

1 PATIO FENCE
L6-09 PLAN, ELEVATIONS, SECTION — SCALE: 3/4" = 1'-0"

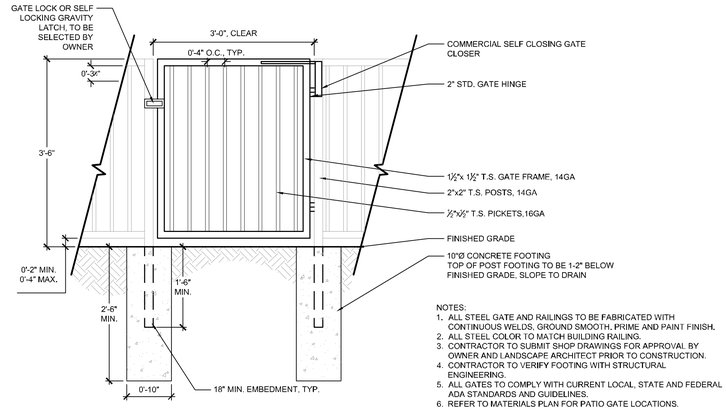

NOTES:
1. ALL STEEL GATE AND RAILINGS TO BE FABRICATED WITH CONTINUOUS WELDS, GROUND SMOOTH, PRIME AND PAINT FINISH.
2. ALL STEEL COLOR TO MATCH BUILDING RAILING.
3. CONTRACTOR TO SUBMIT SHOP DRAWINGS FOR APPROVAL BY OWNER AND LANDSCAPE ARCHITECT PRIOR TO CONSTRUCTION.
4. CONTRACTOR TO VERIFY FOOTING WITH STRUCTURAL ENGINEERING.
5. ALL GATES TO COMPLY WITH CURRENT LOCAL, STATE AND FEDERAL ADA STANDARDS AND GUIDELINES.
6. REFER TO MATERIALS PLAN FOR PATIO GATE LOCATIONS.

2 PATIO GATE
L6-09 SECTION — SCALE: 3/4" = 1'-0"

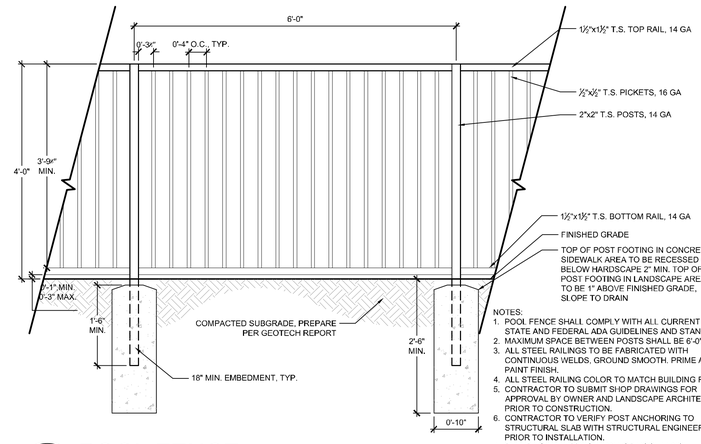

NOTES:
1. POOL FENCE SHALL COMPLY WITH ALL CURRENT LOCAL, STATE AND FEDERAL ADA GUIDELINES AND STANDARDS.
2. MAXIMUM SPACE BETWEEN POSTS SHALL BE 6'-0".
3. ALL STEEL RAILINGS TO BE FABRICATED WITH CONTINUOUS WELDS, GROUND SMOOTH. PRIME AND PAINT FINISH.
4. ALL STEEL RAILING COLOR TO MATCH BUILDING RAILING.
5. CONTRACTOR TO SUBMIT SHOP DRAWINGS FOR APPROVAL BY OWNER AND LANDSCAPE ARCHITECT PRIOR TO CONSTRUCTION.
6. CONTRACTOR TO VERIFY POST ANCHORING TO STRUCTURAL SLAB WITH STRUCTURAL ENGINEERING PRIOR TO INSTALLATION.
7. REFER TO MATERIALS PLAN FOR POOL FENCE LOCATION.

3 POOL FENCE
L6-09 SECTION — NOT TO SCALE

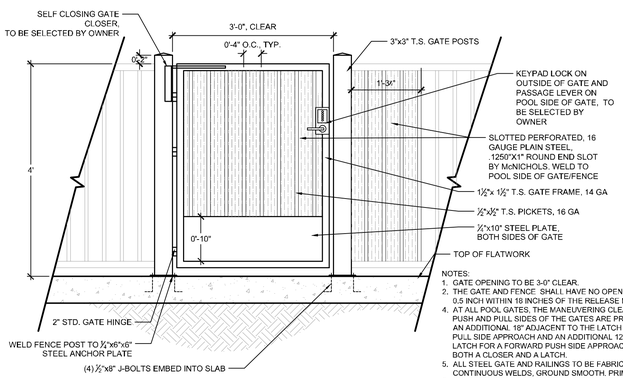

NOTES:
1. GATE OPENING TO BE 3-0" CLEAR.
2. THE GATE AND FENCE SHALL HAVE NO OPENINGS GREATER THAN 0.5 INCH WITHIN 18 INCHES OF THE RELEASE MECHANISM.
4. AT ALL POOL GATES, THE MANEUVERING CLEARANCES AT THE PUSH AND PULL SIDES OF THE GATES ARE PROVIDED INCLUDING AN ADDITIONAL 18" ADJACENT TO THE LATCH FOR A FORWARD PULL SIDE APPROACH AND AN ADDITIONAL 12" ADJACENT TO THE LATCH FOR A FORWARD PUSH SIDE APPROACH TO A GATE WITH BOTH A CLOSER AND A LATCH.
5. ALL STEEL GATE AND RAILINGS TO BE FABRICATED WITH CONTINUOUS WELDS, GROUND SMOOTH. PRIME AND PAINT FINISH.
6. ALL STEEL COLOR TO MATCH BUILDING RAILING.
7. CONTRACTOR TO SUBMIT SHOP DRAWINGS FOR DESIGN INTENT APPROVAL BY OWNER AND LANDSCAPE ARCHITECT PRIOR TO CONSTRUCTION.
8. CONTRACTOR TO VERIFY POST ANCHORING TO STRUCTURAL SLAB WITH STRUCTURAL ENGINEERING PRIOR TO INSTALLATION.
9. ALL GATES TO COMPLY WITH CURRENT LOCAL, STATE AND FEDERAL ADA STANDARDS AND GUIDELINES AND STATE POOL CODE.
10. REFER TO MATERIALS PLAN FOR GATE LOCATIONS.
11. FINAL GATE DESIGN MAY VARY.

4 POOL GATE
L6-09 SECTION — NOT TO SCALE

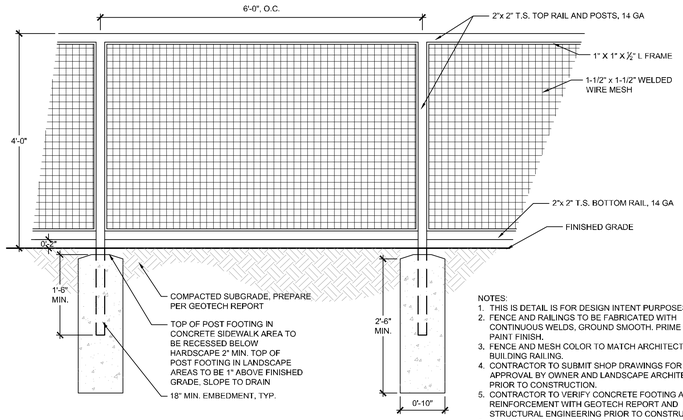

NOTES:
1. THIS IS DETAIL IS FOR DESIGN INTENT PURPOSES ONLY.
2. FENCE AND RAILINGS TO BE FABRICATED WITH CONTINUOUS WELDS, GROUND SMOOTH. PRIME AND PAINT FINISH.
3. FENCE AND MESH COLOR TO MATCH ARCHITECTURAL BUILDING RAILING.
4. CONTRACTOR TO SUBMIT SHOP DRAWINGS FOR APPROVAL BY OWNER AND LANDSCAPE ARCHITECT PRIOR TO CONSTRUCTION.
5. CONTRACTOR TO VERIFY CONCRETE FOOTING AND REINFORCEMENT WITH GEOTECH REPORT AND STRUCTURAL ENGINEERING PRIOR TO CONSTRUCTION.
6. ALL FENCES TO COMPLY WITH LOCAL, STATE AND FEDERAL ADA STANDARDS AND GUIDELINES.
7. REFER TO MATERIALS PLAN FOR DOG FENCE LOCATIONS.

5 DOG FENCE
L6-09 ELEVATION / SECTION — NOT TO SCALE

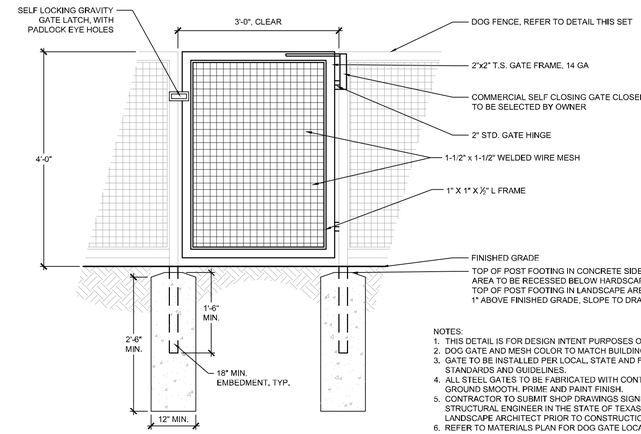

NOTES:
1. THIS DETAIL IS FOR DESIGN INTENT PURPOSES ONLY.
2. DOG GATE AND MESH COLOR TO MATCH BUILDING RAILING.
3. GATE TO BE INSTALLED PER LOCAL, STATE AND FEDERAL ADA STANDARDS AND GUIDELINES.
4. ALL STEEL GATES TO BE FABRICATED WITH CONTINUOUS WELDS, GROUND SMOOTH. PRIME AND PAINT FINISH.
5. CONTRACTOR TO SUBMIT SHOP DRAWINGS SIGNED AND SEALED BY STRUCTURAL ENGINEER IN THE STATE OF TEXAS FOR APPROVAL BY LANDSCAPE ARCHITECT PRIOR TO CONSTRUCTION.
6. REFER TO MATERIALS PLAN FOR DOG GATE LOCATION.

6 DOG GATE
L6-09 ELEVATION/SECTION — NOT TO SCALE

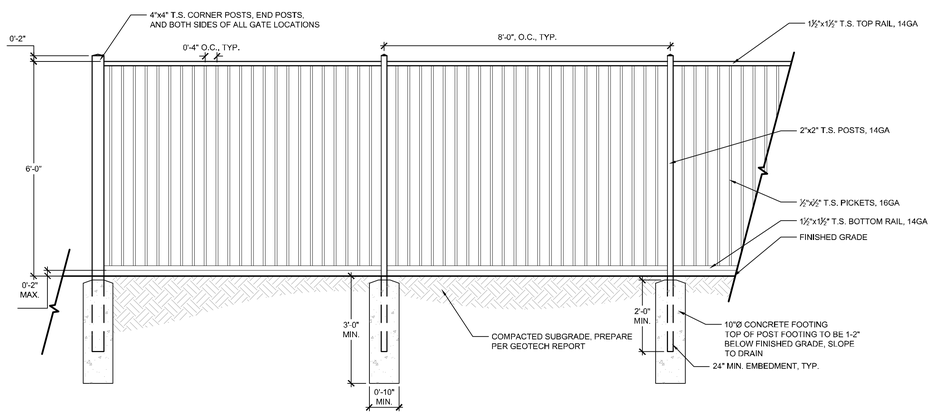

NOTES:
1. MAXIMUM SPACE BETWEEN POSTS SHALL BE 8'-0".
2. ALL STEEL RAILINGS TO BE FABRICATED WITH CONTINUOUS WELDS, GROUND SMOOTH. PRIME AND PAINT FINISH.
3. ALL STEEL RAILING COLOR TO MATCH BUILDING RAILING.
4. CONTRACTOR TO SUBMIT SHOP DRAWINGS FOR APPROVAL BY OWNER AND LANDSCAPE ARCHITECT PRIOR TO CONSTRUCTION.
5. CONTRACTOR TO VERIFY FOOTING WITH GEOTECH REPORT AND STRUCTURAL ENGINEERING.
6. REFER TO MATERIALS PLAN FOR PERIMETER FENCE LOCATION.

7 PERIMETER FENCE - 6FT
L6-09 SECTION — NOT TO SCALE

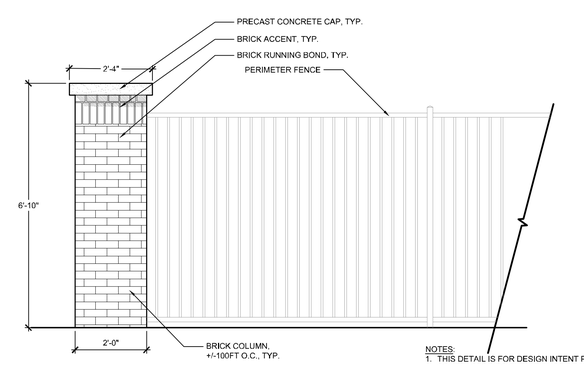

NOTES:
1. THIS DETAIL IS FOR DESIGN INTENT PURPOSES ONLY.
2. CONTRACTOR TO SUBMIT SHOP DRAWINGS SEALED BY STRUCTURAL ENGINEER LICENSED IN THE STATE OF TEXAS FOR APPROVAL AS TO DESIGN INTENT BY OWNER AND LANDSCAPE ARCHITECT PRIOR TO CONSTRUCTION.
3. CONCRETE FOOTING AND FOOTING REINFORCEMENT TO BE DESIGNED AND SEALED BY STRUCTURAL ENGINEER LICENSE IN THE STATE OF TEXAS.
4. CONTRACTOR TO VERIFY FOOTING WITH GEOTECH REPORT AND STRUCTURAL ENGINEERING.
5. REFER TO MATERIALS PLAN FOR MASONRY COLUMN LOCATION.

8 PERIMETER COLUMN
L6-09 ELEVATION — NOT TO SCALE

LandDesign.
5301 ALPHA ROAD, SUITE 24
DALLAS, TX 75240
214.785.6009
WWW.LANDDESIGN.COM

CLIENT:
DHI COMMUNITIES
1341 HORTON CIRCLE
ARLINGTON, TX 76011
817.390.8200

KEY MAP

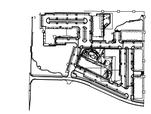

SEAL

PRELIMINARY
FOR REVIEW PURPOSES ONLY AND SHALL NOT BE USED FOR BIDDING, PERMITTING, OR CONSTRUCTION.

Matthew S. Vinten
Registered Landscape Architect of the State of TEXAS
Registration Number: 2946

I, Matthew Vinten, hereby certify that this Landscape Plan complies with the requirements of Chapter 8 of the Unified Development Code.

SITE DEVELOPMENT PLAN

PROJECT

ASCEND WESTINGHOUSE

GEORGETOWN, TEXAS

LANDDESIGN PROJ.#
8520004

REVISION / ISSUANCE

NO.	DESCRIPTION	DATE
	SITE DEVELOPMENT PLAN	07.20.2020
	SDP RESUBMITTAL	08.31.2020
	SDP RESUBMITTAL	09.21.2020

DESIGNED BY:
DRAWN BY:
CHECKED BY:

SCALE — NORTH

VERT: N/A
HORZ: N/A

SHEET TITLE

LANDSCAPE SITE DETAILS

SHEET NUMBER

L6-09
CITY CASE NUMBER: 2020-41-SDP
SHEET 30 OF 76

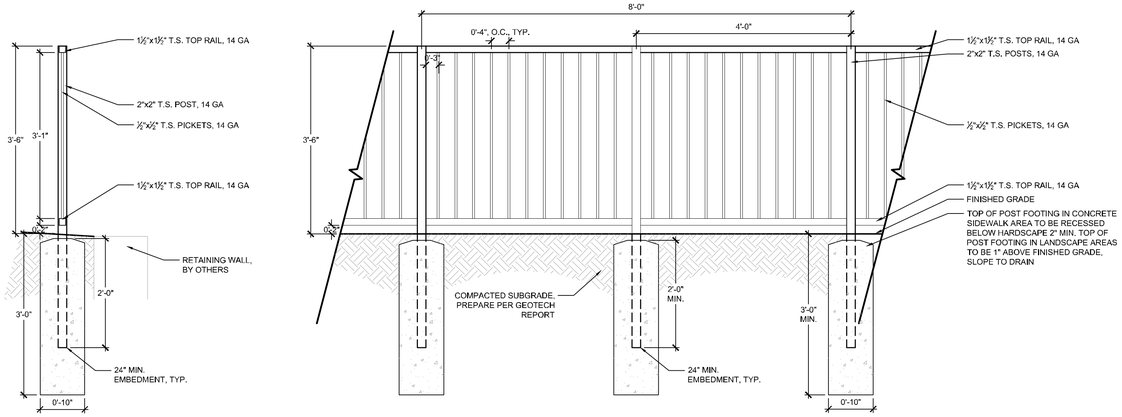

NOTES:
1. MAXIMUM SPACE BETWEEN POSTS SHALL BE 4'-0".
2. RETAINING WALL GUARDRAIL TO BE INSTALLED PER LOCAL, STATE AND FEDERAL ADA STANDARDS AND GUIDELINES.
3. ALL STEEL RAILINGS TO BE FABRICATED WITH CONTINUOUS WELDS, GROUND SMOOTH, PRIME AND PAINT FINISH.
4. ALL STEEL RAILING COLOR TO MATCH BUILDING RAILING.
5. CONTRACTOR TO SUBMIT SHOP DRAWINGS SIGNED AND SEALED BY STRUCTURAL ENGINEER IN THE STATE OF TEXAS FOR APPROVAL BY OWNER AND LANDSCAPE ARCHITECT PRIOR TO CONSTRUCTION.
6. REFER TO MATERIALS PLAN FOR RETAINING WALL GUARDRAIL LOCATION.

1 / L6-10 GUARDRAIL
SECTION

NOT TO SCALE

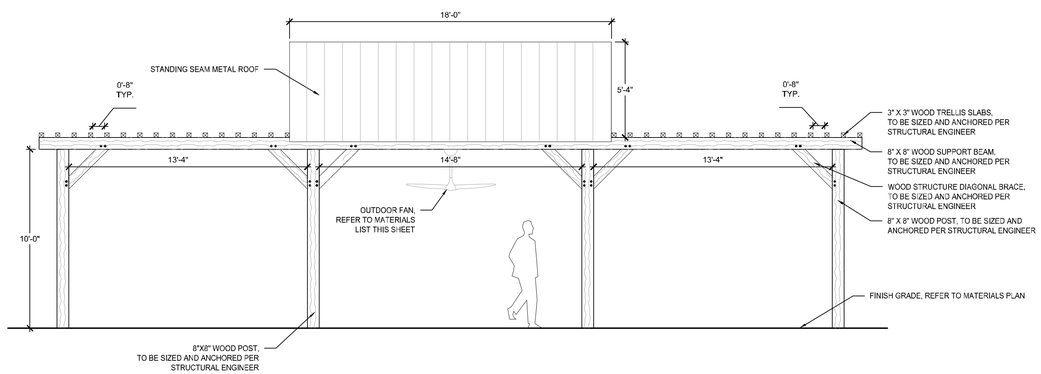

ELEVATION - 1
SCALE: 1/4"=1'-0"

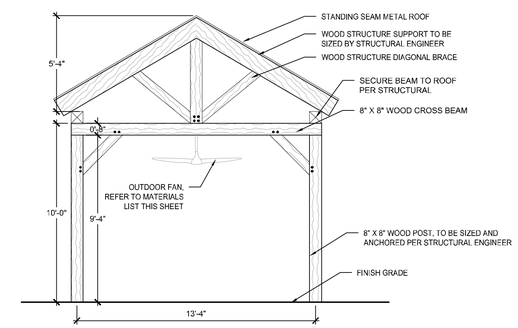

SECTION -1
SCALE: 1/4"=1'-0"

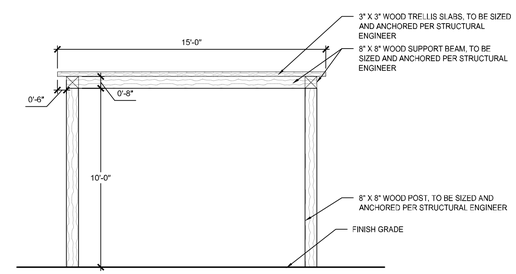

SECTION -2
SCALE: 1/4"=1'-0"

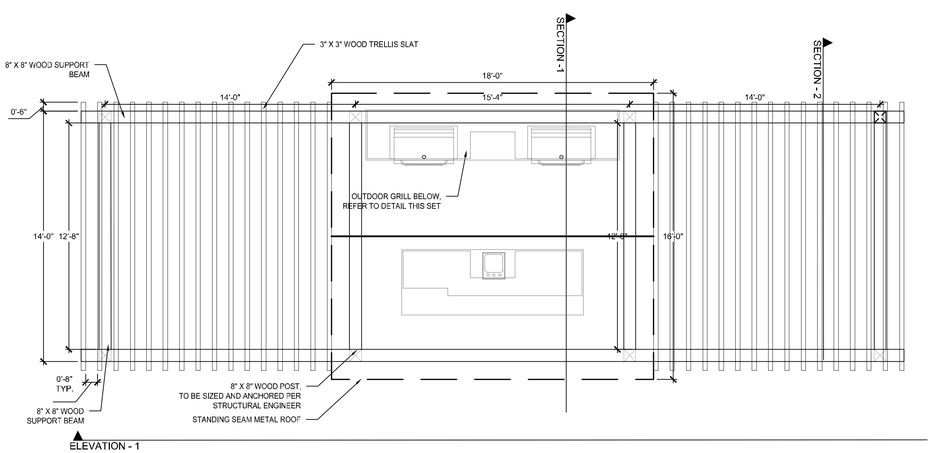

PLAN
SCALE: 1/4"=1'-0"

SPECIFICATIONS:

OUTDOOR FAN
SPECIFICATION: OUTDOOR HAIKU FAN
CATALOG #: FR150A-U0F10-3H03-02471-471P010
CONTACT: BIG ASS FANS
P: 877.244.3267
WWW.STORE.BIGASSFANS.COM

NOTES:

1. THIS DETAIL IS FOR DESIGN INTENT ONLY.
2. SHADE STRUCTURE - A, IS TO BE DESIGN/BUILD. CONTRACTOR SHALL BE RESPONSIBLE FOR SUBMITTING ALL REQUIRED PERMITS AND/OR APPLICATIONS TO LOCAL JURISDICTION FOR REVIEW AND APPROVAL.
3. ALL WOOD TO BE WESTERN RED CEDAR.
4. WESTERN RED CEDAR SHALL BE TREATED AND SEALED WITH COMMERCIAL GRADE OIL BASED SEALER. CONTRACTOR TO SUBMIT SAMPLES OF SEALER ON WESTERN RED CEDAR FOR APPROVAL.
5. CONTRACTOR TO SUBMIT COMPLETE SET OF SHOP DRAWINGS FOR REVIEW TO BE APPROVED BY OWNER/LANDSCAPE ARCHITECT PRIOR TO CONSTRUCTION. SHOP DRAWINGS TO BE DESIGNED AND SEALED BY LICENSED STRUCTURAL ENGINEER IN THE STATE OF TEXAS.
6. POSTS TO BE TREATED FOR GROUND CONTACT.
7. ALL METAL FRAME PARTS TO BE PRIMED AND PAINTED TO MATCH ARCHITECTURAL RAILING.
8. REFER TO GEOTECH REPORT FOR FOOTING DEPTH.

2 / L6-10 SHADE STRUCTURE - A
PLAN, ELEVATION, SECTION

SCALE: VARIES

LandDesign.
5301 ALPHA ROAD, SUITE 24
DALLAS, TX 75240
214.785.6009
WWW.LANDDESIGN.COM

CLIENT:
DHI COMMUNITIES
1341 HORTON CIRCLE
ARLINGTON, TX 76011
817.390.8200

KEY MAP

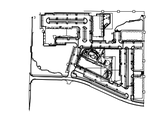

SEAL

PRELIMINARY
FOR REVIEW PURPOSES ONLY AND SHALL NOT BE USED FOR BIDDING, PERMITTING, OR CONSTRUCTION.

Matthew S. Vinten
Registered Landscape Architect of the State of TEXAS

Registration Number: 2946

I, Matthew Vinten, hereby certify that this Landscape Plan complies with the requirements of Chapter 8 of the Unified Development Code.

SITE DEVELOPMENT PLAN

PROJECT

ASCEND WESTINGHOUSE

GEORGETOWN, TEXAS

LANDDESIGN PROJ.#
8520004

REVISION / ISSUANCE

NO.	DESCRIPTION	DATE
	SITE DEVELOPMENT PLAN	07.20.2020
	SDP RESUBMITTAL	08.31.2020
	SDP RESUBMITTAL	09.21.2020

DESIGNED BY:
DRAWN BY:
CHECKED BY:

SCALE NORTH

VERT: N/A
HORZ: N/A

SHEET TITLE

LANDSCAPE SITE DETAILS

SHEET NUMBER

L6-10

CITY CASE NUMBER: 2020-41-SDP
SHEET 31 OF 76

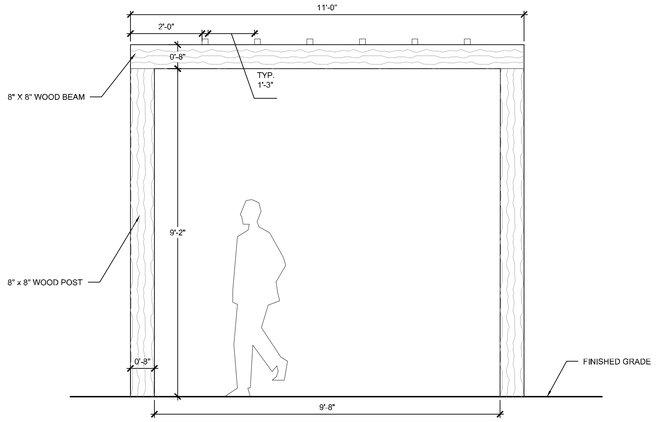

SECTION
SCALE: ½"=1'-0"

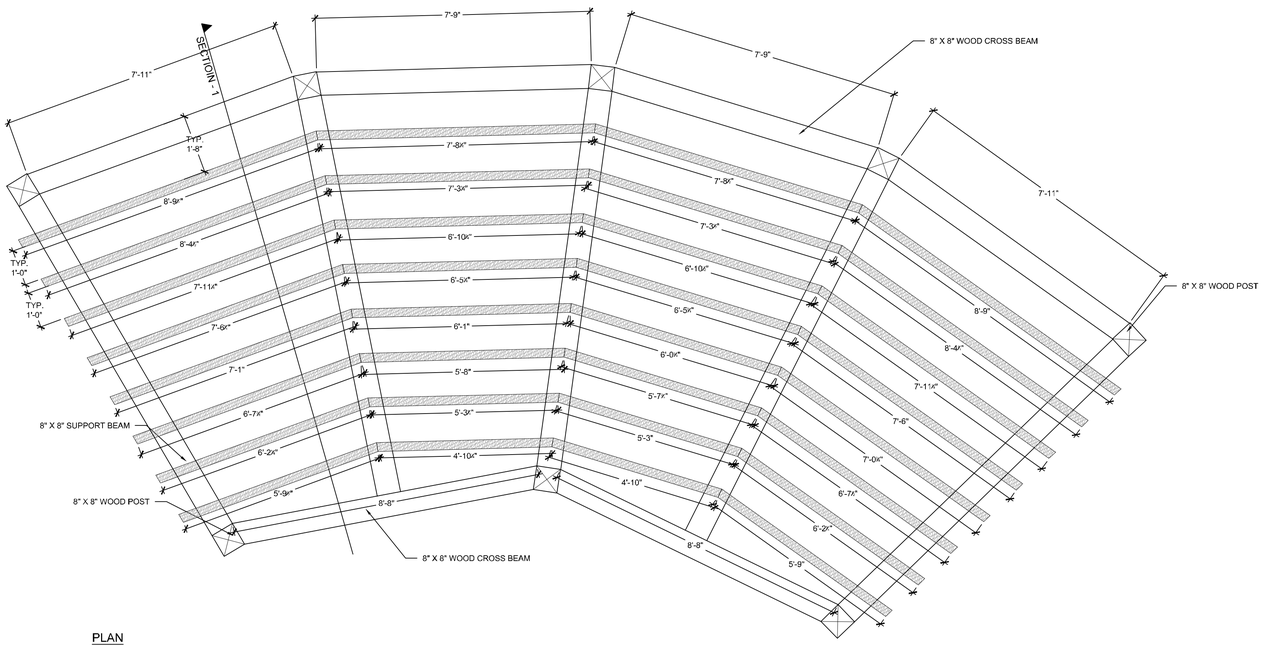

PLAN
SCALE: ½"=1'-0"

NOTES:
1. THIS DETAIL IS FOR DESIGN INTENT PURPOSES ONLY.
2. SHADE STRUCTURE - B, IS TO BE DESIGN/BUILD. CONTRACTOR SHALL BE RESPONSIBLE FOR SUBMITTING ALL REQUIRED PERMITS AND/OR APPLICATIONS TO LOCAL JURISDICTION FOR REVIEW AND APPROVAL.
3. ALL WOOD TO BE WESTERN RED CEDAR.
4. WESTERN RED CEDAR SHALL BE TREATED AND SEALED WITH COMMERCIAL GRADE OIL BASED SEALER. CONTRACTOR TO SUBMIT SAMPLES OF SEALER ON WESTERN RED CEDAR FOR APPROVAL.
5. ALL STEEL ELEMENTS OF STRUCTURE TO BE PAINTED. COLOR TBD.
6. WOOD SIZES ARE SHOWN FOR GRAPHICAL PURPOSES ONLY. OVERHEAD STEEL STRUCTURE TO BE DESIGNED AND SEALED BY STRUCTURAL ENGINEER. CONTRACTOR TO SUBMIT COMPLETE SHOP DRAWINGS TO BE DESIGNED AND SEALED BY STRUCTURAL ENGINEER LICENSED IN THE STATE OF TEXAS AND REVIEWED FOR DESIGN INTENT BY OWNER/LANDSCAPE ARCHITECT FOR APPROVAL PRIOR TO CONSTRUCTION.
7. CONTRACTOR TO SUBMIT COLOR SAMPLE OF PAINTED STEEL TO OWNER/LANDSCAPE ARCHITECT OR DESIGNATED REPRESENTATIVE BEFORE ORDERING MATERIAL AND BEGINNING OF CONSTRUCTION FOR APPROVAL.
8. REFER TO ARCHITECTURAL, STRUCTURAL, ELECTRICAL, MATERIAL, AND GRADING PLANS FOR ADDITIONAL INFORMATION.

1
L6-11

SHADE STRUCTURE - B

PLAN, ELEVATION, SECTION

SCALE: VARIES

LandDesign.
5301 ALPHA ROAD, SUITE 24
DALLAS, TX 75240
214.785.6009
WWW.LANDDESIGN.COM

CLIENT:

DHI COMMUNITIES
1341 HORTON CIRCLE
ARLINGTON, TX 76011
817.390.8200

KEY MAP

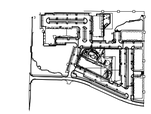

SEAL

PRELIMINARY
FOR REVIEW PURPOSES ONLY AND SHALL NOT BE USED FOR BIDDING, PERMITTING, OR CONSTRUCTION.

Matthew S. Vinten
Registered Landscape Architect of the State of TEXAS

Registration Number: 2946

I, Matthew Vinten, hereby certify that this Landscape Plan complies with the requirements of Chapter 8 of the Unified Development Code.

SITE DEVELOPMENT PLAN

PROJECT

ASCEND WESTINGHOUSE

GEORGETOWN, TEXAS

LANDDESIGN PROJ.#
8520004

REVISION / ISSUANCE

NO.	DESCRIPTION	DATE
	SITE DEVELOPMENT PLAN	07.20.2020
	SDP RESUBMITTAL	08.31.2020
	SDP RESUBMITTAL	09.21.2020

DESIGNED BY:
DRAWN BY:
CHECKED BY:

SCALE NORTH

VERT: N/A
HORZ: N/A

SHEET TITLE

LANDSCAPE SITE DETAILS

SHEET NUMBER

L6-11
CITY CASE NUMBER: 2020-41-SDP
SHEET 32 OF 76

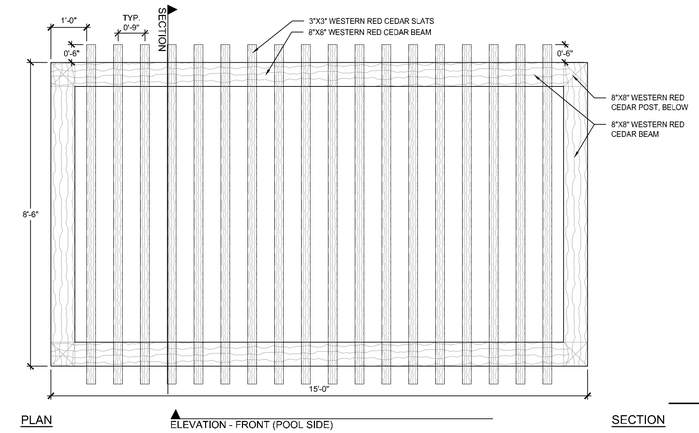

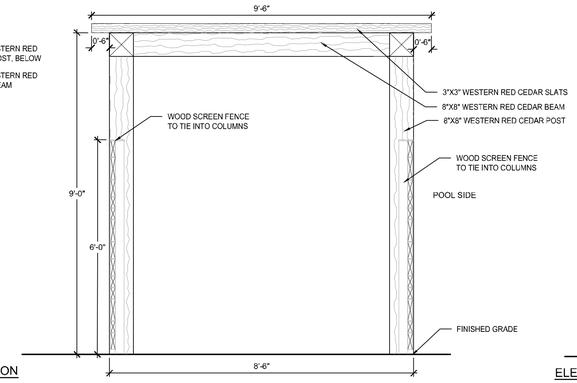

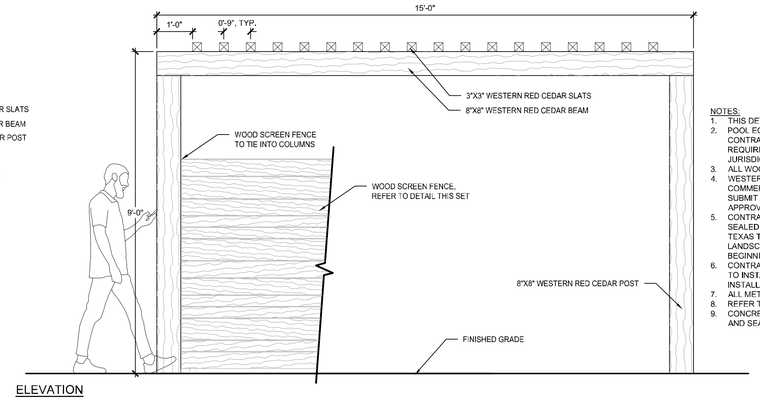

NOTES:
1. THIS DETAIL IS FOR DESIGN INTENT PURPOSES ONLY.
2. POOL EQUIPMENT - STRUCTURE IS TO BE DESIGN/BUILD. CONTRACTOR SHALL BE RESPONSIBLE FOR SUBMITTING ALL REQUIRED PERMITS AND/OR APPLICATIONS TO LOCAL JURISDICTION FOR REVIEW AND APPROVAL.
3. ALL WOOD TO BE WESTERN RED CEDAR.
4. WESTERN RED CEDAR SHALL BE TREATED AND SEALED WITH COMMERCIAL GRADE OIL BASED SEALER. CONTRACTOR TO SUBMIT SAMPLES OF SEALER ON WESTERN RED CEDAR FOR APPROVAL.
5. CONTRACTOR TO SUBMIT FULL SHOP DRAWINGS DESIGNED AND SEALED BY STRUCTURAL ENGINEER LICENSED IN THE STATE OF TEXAS TO BE REVIEWED AND APPROVED FOR DESIGN INTENT BY LANDSCAPE ARCHITECT PRIOR TO ORDERING OF MATERIAL AND BEGINNING OF CONSTRUCTION.
6. CONTRACTOR TO PROVIDED MOCKUP OF WOOD AND STAIN PRIOR TO INSTALLATION AND PURCHASING OF LUMBER MATERIAL AND INSTALLATION.
7. ALL METAL TO MATCH ARCHITECTURAL RAILING COLOR.
8. REFER TO MATERIALS PLAN FOR LOCATION.
9. CONCRETE FOOTING SIZE AND REINFORCEMENT TO BE DESIGNED AND SEALED BY LICENSED STRUCTURAL ENGINEER.

1 / L6-12 POOL EQUIPMENT - STRUCTURE

PLAN, SECTION, ELEVATION

NOT TO SCALE

NOTES:

1. THIS DETAIL IS FOR DESIGN INTENT ONLY.
2. SHADE STRUCTURE - C, IS TO BE DESIGN/BUILD. CONTRACTOR SHALL BE RESPONSIBLE FOR SUBMITTING ALL REQUIRED PERMITS AND/OR APPLICATIONS TO LOCAL JURISDICTION FOR REVIEW AND APPROVAL.
3. ALL WOOD TO BE WESTERN RED CEDAR.
4. WESTERN RED CEDAR SHALL BE TREATED AND SEALED WITH COMMERCIAL GRADE OIL BASED SEALER. CONTRACTOR TO SUBMIT SAMPLES OF SEALER ON WESTERN RED CEDAR FOR APPROVAL.
5. CONTRACTOR TO SUBMIT COMPLETE SET OF SHOP DRAWINGS FOR REVIEW TO BE APPROVED BY OWNER/LANDSCAPE ARCHITECT PRIOR TO CONSTRUCTION. SHOP DRAWINGS TO BE DESIGNED AND SEALED BY LICENSED STRUCTURAL ENGINEER IN THE STATE OF TEXAS.
6. POSTS TO BE TREATED FOR GROUND CONTACT.
7. ALL METAL FRAME PARTS TO BE PRIMED AND PAINTED TO MATCH ARCHITECTURAL RAILING.
8. REFER TO GEOTECH REPORT FOR FOOTING DEPTH.

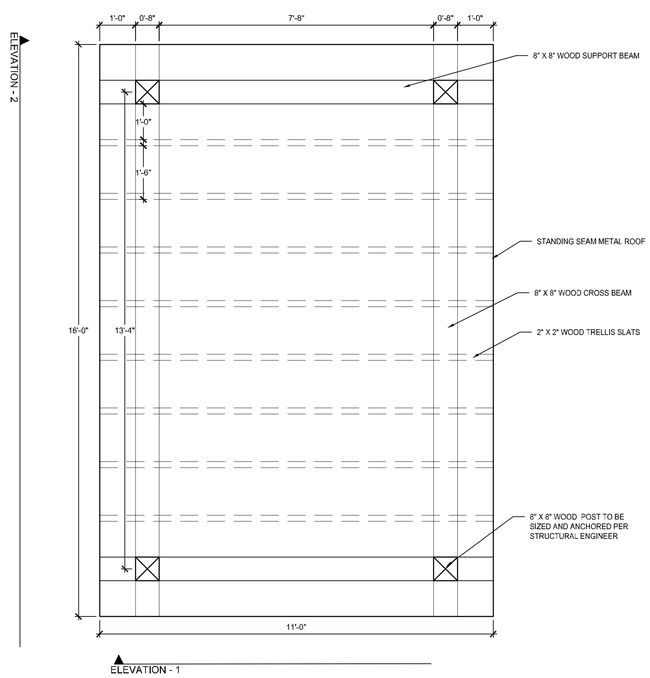

PLAN
SCALE:1/2"=1'-0"

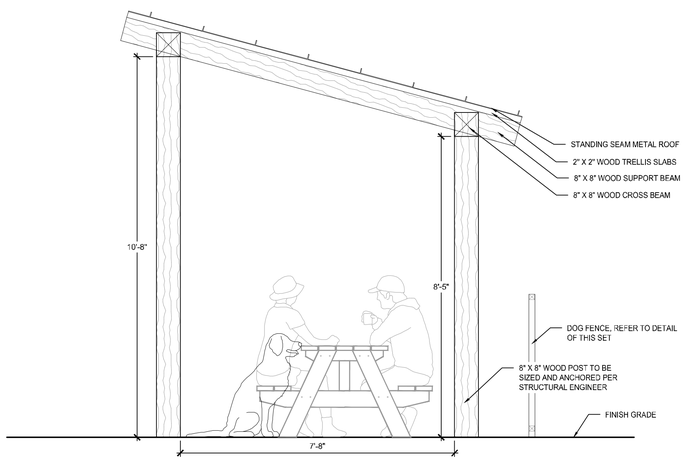

ELEVATION-1
SCALE:½""=1'-0"

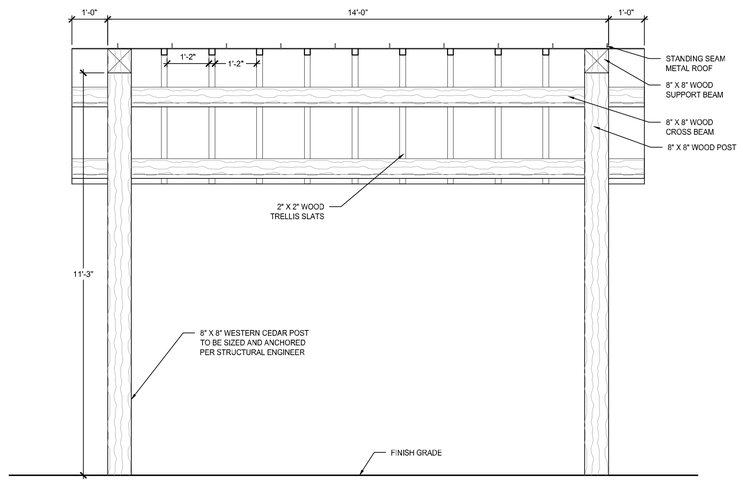

ELEVATION-2
SCALE:½""=1'-0"

2 / L6-12 SHADE STRUCTURE - C

PLAN, ELEVATION, SECTION

SCALE VARIES

LandDesign.
5301 ALPHA ROAD, SUITE 24
DALLAS, TX 75240
214.785.6009
WWW.LANDDESIGN.COM

CLIENT:
DHI COMMUNITIES
1341 HORTON CIRCLE
ARLINGTON, TX 76011
817.390.8200

KEY MAP

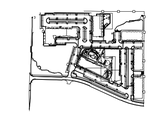

SEAL

PRELIMINARY
FOR REVIEW PURPOSES ONLY AND SHALL NOT BE USED FOR BIDDING, PERMITTING, OR CONSTRUCTION.

Matthew S. Vinten
Registered Landscape Architect of the State of TEXAS
Registration Number: 2946

I, Matthew Vinten, hereby certify that this Landscape Plan complies with the requirements of Chapter 8 of the Unified Development Code.

SITE DEVELOPMENT PLAN

PROJECT

ASCEND WESTINGHOUSE

GEORGETOWN, TEXAS

LANDDESIGN PROJ.#
8520004

REVISION / ISSUANCE

NO.	DESCRIPTION	DATE
	SITE DEVELOPMENT PLAN	07.20.2020
	SDP RESUBMITTAL	08.31.2020
	SDP RESUBMITTAL	09.21.2020

DESIGNED BY:
DRAWN BY:
CHECKED BY:

SCALE — NORTH

VERT: N/A
HORZ: N/A

SHEET TITLE

LANDSCAPE SITE DETAILS

SHEET NUMBER

L6-12

CITY CASE NUMBER: 2020-41-SDP
SHEET 33 OF 76

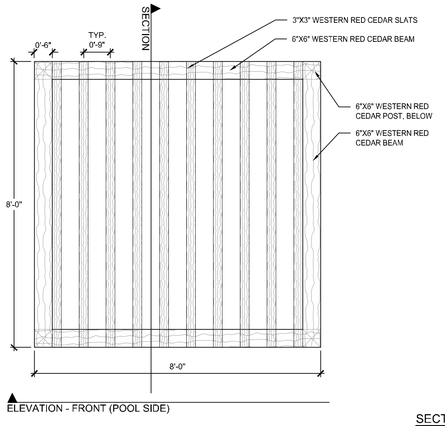

PLAN

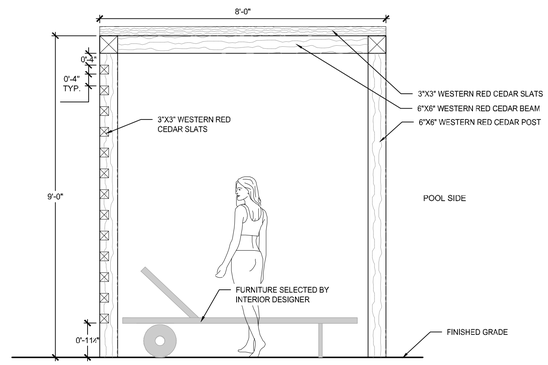

SECTION

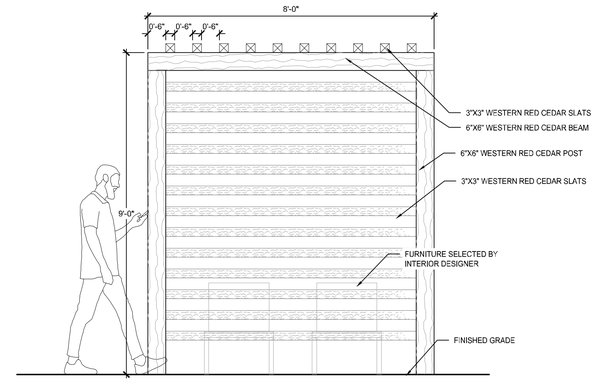

ELEVATION

NOTES:
1. THIS DETAIL IS FOR DESIGN INTENT PURPOSES ONLY.
2. POOL CABANA IS TO BE DESIGN/BUILD. CONTRACTOR SHALL BE RESPONSIBLE FOR SUBMITTING ALL REQUIRED PERMITS AND/OR APPLICATIONS TO LOCAL JURISDICTION FOR REVIEW AND APPROVAL.
3. ALL WOOD TO BE WESTERN RED CEDAR.
4. WESTERN RED CEDAR SHALL BE TREATED AND SEALED WITH COMMERCIAL GRADE OIL BASED SEALER. CONTRACTOR TO SUBMIT SAMPLES OF SEALER ON WESTERN RED CEDAR FOR APPROVAL.
5. CONTRACTOR TO SUBMIT FULL SHOP DRAWINGS DESIGNED AND SEALED BY STRUCTURAL ENGINEER LICENSED IN THE STATE OF TEXAS TO BE REVIEWED AND APPROVED FOR DESIGN INTENT BY LANDSCAPE ARCHITECT PRIOR TO ORDERING OF MATERIAL AND BEGINNING OF CONSTRUCTION.
6. CONTRACTOR TO PROVIDED MOCKUP OF WOOD AND STAIN PRIOR TO INSTALLATION AND PURCHASING OF LUMBER MATERIAL AND INSTALLATION.
7. ALL METAL TO MATCH ARCHITECTURAL RAILING COLOR.
8. CONCRETE FOOTING SIZE AND REINFORCEMENT TO BE DESIGNED AND SEALED BY LICENSED STRUCTURAL ENGINEER, REFER TO STRUCTURAL PLANS

1 POOL CABANA
L6-13 PLAN, SECTION, ELEVATION

NOT TO SCALE

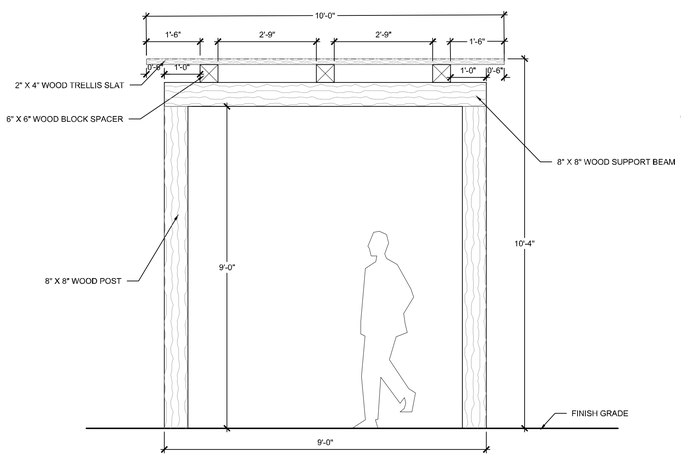

10 X 12 SECTION
SCALE: ½"=1'-0"

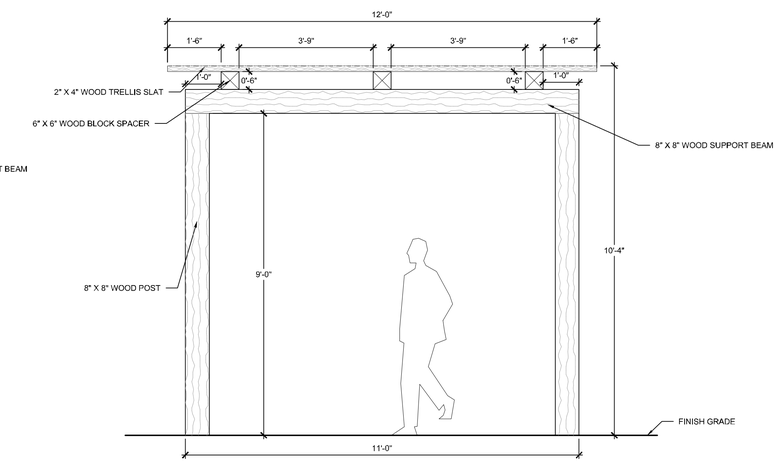

12 X 12 SECTION
SCALE: ½"=1'-0"

NOTES:
1. THIS DETAIL IS FOR DESIGN INTENT PURPOSES ONLY.
2. WOOD FRAME, IS TO BE DESIGN/BUILD. CONTRACTOR SHALL BE RESPONSIBLE FOR SUBMITTING ALL REQUIRED PERMITS AND/OR APPLICATIONS TO LOCAL JURISDICTION FOR REVIEW AND APPROVAL.
3. ALL WOOD TO BE WESTERN RED CEDAR.
4. WESTERN RED CEDAR SHALL BE TREATED AND SEALED WITH COMMERCIAL GRADE OIL BASED SEALER. CONTRACTOR TO SUBMIT SAMPLES OF SEALER ON WESTERN RED CEDAR FOR APPROVAL.
5. ALL STEEL ELEMENTS OF STRUCTURE TO BE PAINTED, COLOR TBD.
6. WOOD SIZES ARE SHOWN FOR GRAPHICAL PURPOSES ONLY. OVERHEAD STRUCTURE TO BE DESIGNED AND SEALED BY STRUCTURAL ENGINEER. CONTRACTOR TO SUBMIT COMPLETE SHOP DRAWINGS TO BE DESIGNED AND SEALED BY STRUCTURAL ENGINEER LICENSED IN THE STATE OF TEXAS AND REVIEWED FOR DESIGN INTENT BY OWNER/LANDSCAPE ARCHITECT FOR APPROVAL PRIOR TO CONSTRUCTION.
7. CONTRACTOR TO SUBMIT COLOR SAMPLE OF PAINTED STEEL TO OWNER/LANDSCAPE ARCHITECT OR DESIGNATED REPRESENTATIVE BEFORE ORDERING MATERIAL AND BEGINNING OF CONSTRUCTION FOR APPROVAL.
8. REFER TO ARCHITECTURAL, STRUCTURAL, ELECTRICAL, MATERIAL, AND GRADING PLANS FOR ADDITIONAL INFORMATION.

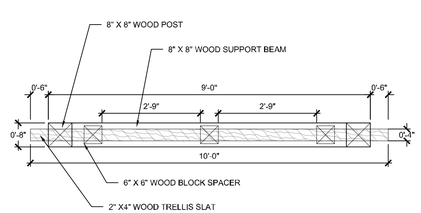

10 X 12 WOOD FRAME PLAN
SCALE: ½"=1'-0"

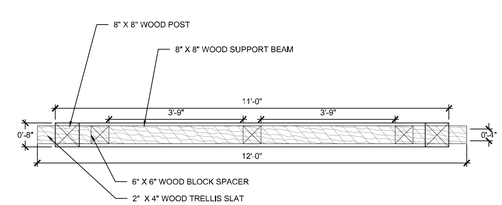

12 X 12 WOOD FRAME PLAN
SCALE: ½"=1'-0"

2 WOOD FRAME
L6-13 PLAN, ELEVATION

SCALE: VARIES

LandDesign.
5301 ALPHA ROAD, SUITE 24
DALLAS, TX 75240
214.785.6009
WWW.LANDDESIGN.COM

CLIENT:
DHI COMMUNITIES
1341 HORTON CIRCLE
ARLINGTON, TX 76011
817.390.8200

KEY MAP

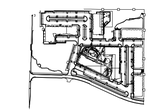

SEAL

PRELIMINARY
FOR REVIEW PURPOSES ONLY AND SHALL NOT BE USED FOR BIDDING, PERMITTING, OR CONSTRUCTION.

Matthew S. Vinten
Registered Landscape Architect of the State of TEXAS

Registration Number: 2946

I, Matthew Vinten, hereby certify that this Landscape Plan complies with the requirements of Chapter 8 of the Unified Development Code.

SITE DEVELOPMENT PLAN

PROJECT:

ASCEND WESTINGHOUSE

GEORGETOWN, TEXAS

LANDDESIGN PROJ.#
8520004

REVISION / ISSUANCE

NO.	DESCRIPTION	DATE
	SITE DEVELOPMENT PLAN	07.20.2020
	SDP RESUBMITTAL	08.31.2020
	SDP RESUBMITTAL	09.21.2020

DESIGNED BY:
DRAWN BY:
CHECKED BY:

SCALE NORTH

VERT: N/A
HORZ: N/A

SHEET TITLE

LANDSCAPE SITE DETAILS

SHEET NUMBER
L6-13
CITY CASE NUMBER: 2020-41-SDP
SHEET 34 OF 76

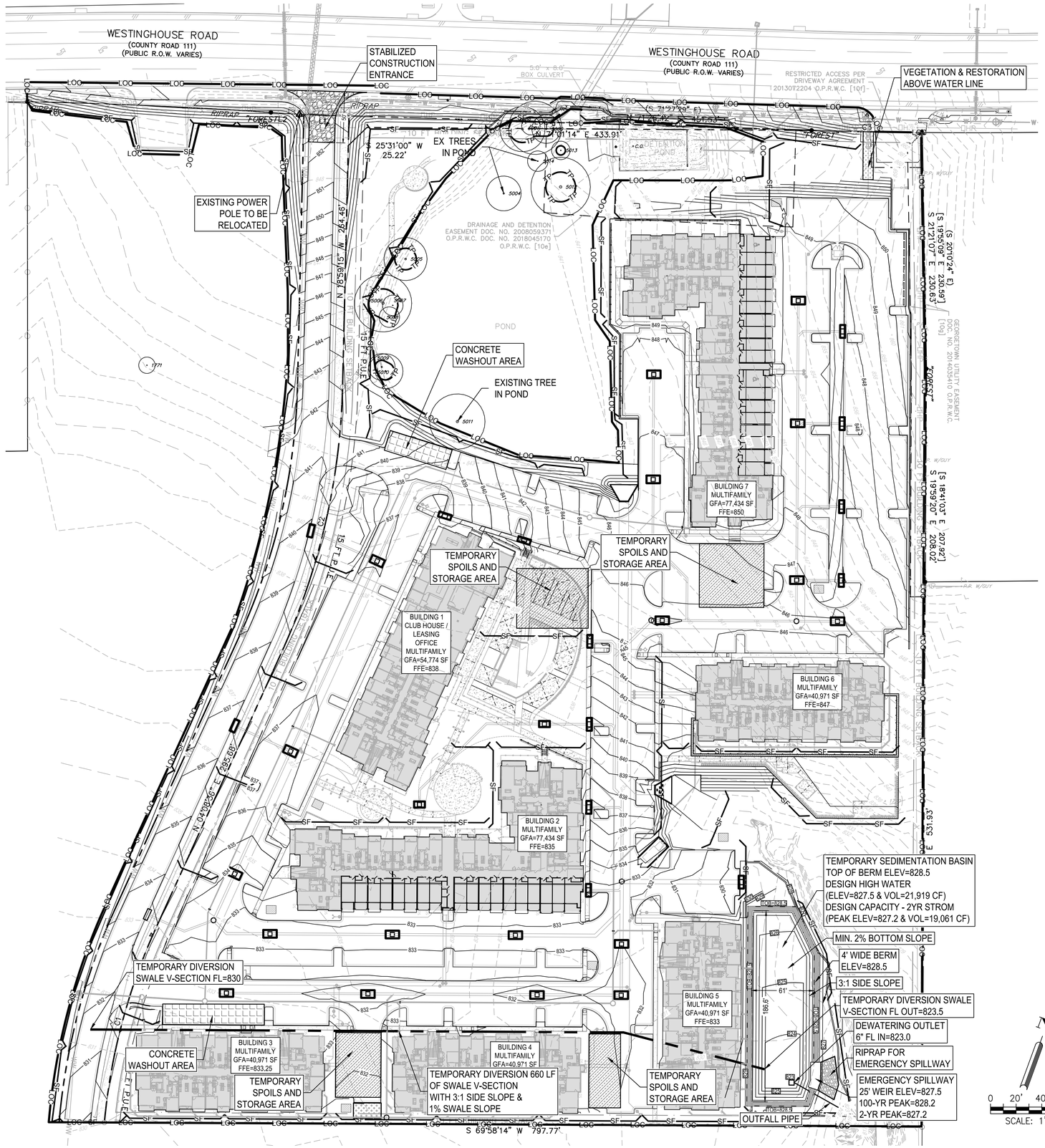

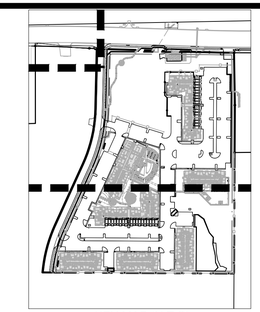

KEY MAP (N.T.S)

LEGEND

- PROPERTY BOUNDARY
- EXISTING MAJOR CONTOUR
- EXISTING MINOR CONTOUR
- PROPOSED MAJOR CONTOUR
- PROPOSED MINOR CONTOUR
- 100 ENGINEER CALCULATED FLOODPLAIN
- LOC LIMITS OF CONSTRUCTION
- SF SILT FENCE
- TP TREE PROTECTION FENCE
- INLET PROTECTION
- STABILIZED CONSTRUCTION ENTRANCE
- CONCRETE WASHOUT AREA
- TEMPORARY SPOILS AND STORAGE AREA
- HYDRO MULCH RESTORATION AREA
- XXX TREE TO REMAIN
- XXX TREE TO BE REMOVED

Tree Schedule

	Key	Tree #	Size (individual trunks)	Half Critical Root Zone (in feet)	Species
REMOVED	~~NP~~	~~1768~~	~~19"~~	~~9.5'~~	~~CEDAR~~
REMOVED	~~NP~~	~~1769~~	~~10"~~	~~5'~~	~~CEDAR~~
REMOVED	~~NP~~	~~1770~~	~~13", 8"~~	~~8.5'~~	~~CEDAR~~
	P	5000	14"	7'	BLACK WILLOW
	P	5001	12", 12", 10", 6"	13'	BLACK WILLOW
	C	5002	7", 3"	4.5'	BLACK WILLOW
	P	5003	15", 14"	11'	BLACK WILLOW
	P	5004	13", 8"	8.5'	BLACK WILLOW
	P	5005	11", 10", 4", 3",2"	10.5'	BLACK WILLOW
	P	5006	20", 15"	14'	BLACK WILLOW
	C	5007	10"	5'	BLACK WILLOW
	C	5008	10"	5'	BLACK WILLOW
	P	5009	13"	6.5'	BLACK WILLOW
	P	5010	8", 7", 4", 3", 3"	8.5'	BLACK WILLOW
	P	5011	15", 10", 5", 3", 3"	13.5'	BLACK WILLOW
	P	5012	13", 13", 11", 8" (Laid over)	14.5'	BLACK WILLOW
	C	5013	5", 4", 3"	4.5'	BLACK WILLOW
	C	5014	5", 5", 4"	5'	BLACK WILLOW

LEGEND
P = Protected
HT = Heritage Tree
R = Removal of Protected Tree
R-HT = Removal of Heritage Tree
D = Dead or Diseased
NP = Not Protected
C = Credit Tree
X = Prohibited Species (must be removed)

Temporary Sedimentation Basin Volume

	Stage (ft msl)	Pond Depth	Cumulative Pond Depth	Area	Volume	Cumulative
	(Elevation)	(ft)	(ft)	(sf)	(cf)	Volume (cf)
	823.00	0.00	0.00	25		
	824.00	1.00	1.00	1,703	864	864
	825.00	1.00	2.00	4,160	2,932	3,796
	826.00	1.00	3.00	7,080	5,620	9,416
	827.00	1.00	4.00	8,797	7,938	17,354
25' EMERGENCY SPILLWAY	827.50	0.50	4.50	9,464	4,565	21,919
	828.00	0.50	5.00	10,148	4,903	26,823
TOP OF BERM	828.50	0.50	5.50	10,850	5,249	32,072

ADDRESS: 500 WESTINGHOUSE ROAD

REV	DESCRIPTION	DATE	APR

DESIGNED BY: JG
REVIEWED BY: BG
DRAWN BY: JG

BROWN & GAY ENGINEERS, INC.
1701 DIRECTORS BLVD, SUITE 1000
AUSTIN, TX 78731
TBPE Registration No. F-1046
TEL: 512-879-0400 www.brownjgay.com

ASCEND WESTINGHOUSE GEORGETOWN, TEXAS

TREE PRESERVATION PLAN

STATE OF TEXAS
BRIAN J. GRACE
121846
LICENSED PROFESSIONAL ENGINEER
5/29/2020

2020-41-SDP

500 WESTINGHOUSE ROAD

G:\TXC\Projects\DHI_Communities\7616-00-Westinghouse\LD\01_CADD\01_Shts\02_Site Plan\7616-C-SP-TREE PRESERVATION PLAN.dwg Layout: TREE PRESERVATION PLAN Plotted: 9/21/2020 9:43:52 AM

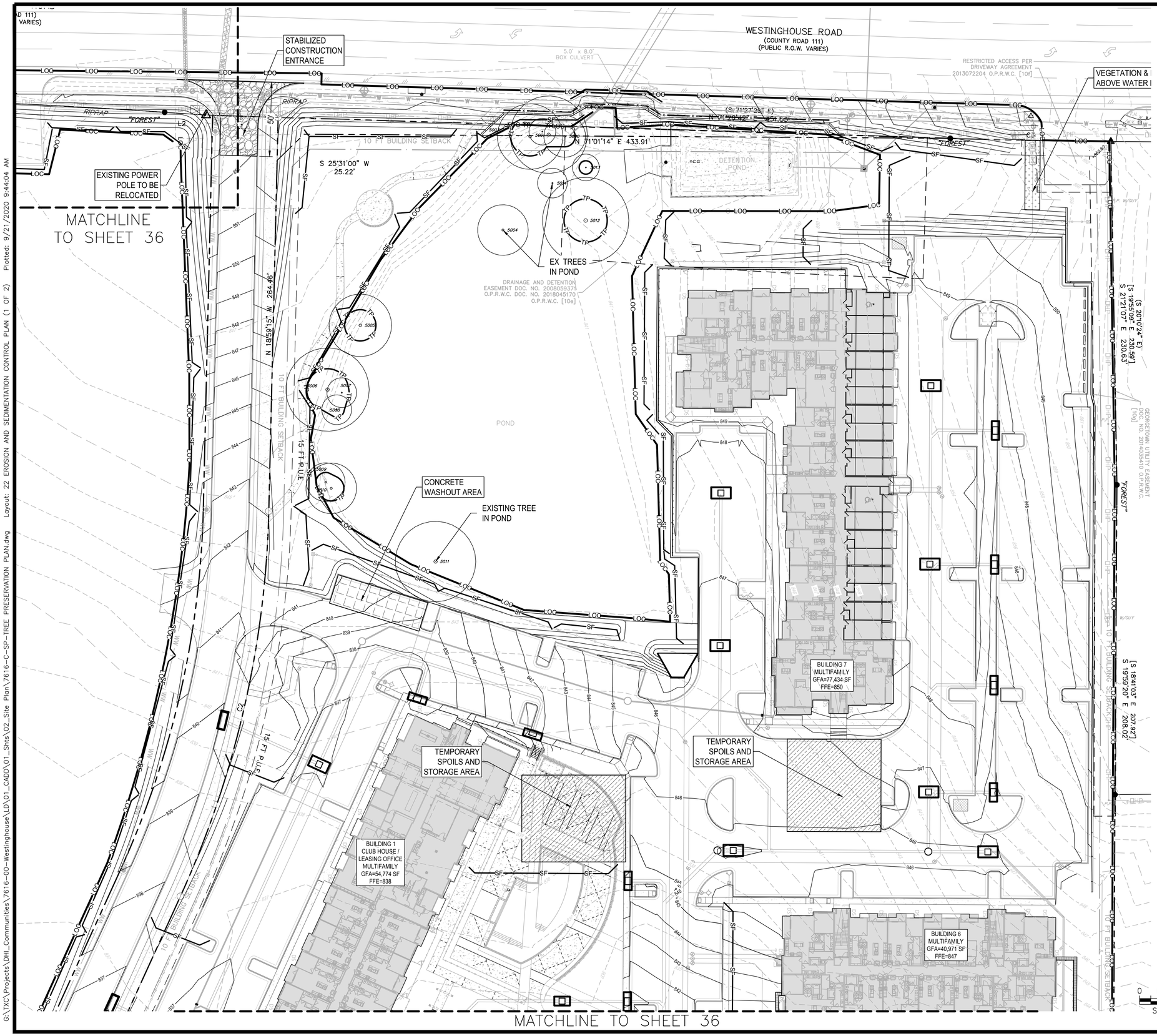

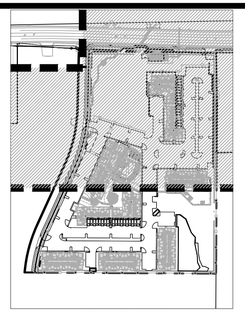

KEY MAP (N.T.S)

LEGEND

- PROPERTY BOUNDARY
- EXISTING MAJOR CONTOUR
- EXISTING MINOR CONTOUR
- PROPOSED MAJOR CONTOUR
- PROPOSED MINOR CONTOUR
- 100 ENGINEER CALCULATED FLOODPLAIN
- LOC LIMITS OF CONSTRUCTION
- SF SILT FENCE
- TP TREE PROTECTION FENCE
- INLET PROTECTION
- STABILIZED CONSTRUCTION ENTRANCE
- CONCRETE WASHOUT AREA
- TEMPORARY SPOILS AND STORAGE AREA
- HYDRO MULCH RESTORATION AREA
- XXX TREE TO REMAIN
- XXX TREE TO BE REMOVED

Tree Schedule

	Key	Tree #	Size (individual trunks)	Half Critical Root Zone (in feet)	Species
REMOVED	~~NP~~	~~1768~~	~~19"~~	~~9.5'~~	~~CEDAR~~
REMOVED	~~NP~~	~~1769~~	~~10"~~	~~5'~~	~~CEDAR~~
REMOVED	~~NP~~	~~1770~~	~~13", 8"~~	~~8.5'~~	~~CEDAR~~
	P	5000	14"	7'	BLACK WILLOW
	P	5001	12", 12", 10", 6"	13'	BLACK WILLOW
	C	5002	7", 3"	4.5'	BLACK WILLOW
	P	5003	15", 14"	11'	BLACK WILLOW
	P	5004	13", 8"	8.5'	BLACK WILLOW
	P	5005	11", 10", 4", 3",2"	10.5'	BLACK WILLOW
	P	5006	20", 15"	14'	BLACK WILLOW
	C	5007	10"	5'	BLACK WILLOW
	C	5008	10"	5'	BLACK WILLOW
	P	5009	13"	6.5'	BLACK WILLOW
	P	5010	8", 7", 4", 3", 3"	8.5'	BLACK WILLOW
	P	5011	15", 10", 5", 3", 3"	13.5'	BLACK WILLOW
	P	5012	13", 13", 11", 8" (Laid over)	14.5'	BLACK WILLOW
	C	5013	5", 4", 3"	4.5'	BLACK WILLOW
	C	5014	5", 5", 4"	5'	BLACK WILLOW

LEGEND
P = Protected
HT = Heritage Tree
R = Removal of Protected Tree
R-HT = Removal of Heritage Tree
D = Dead or Diseased
NP = Not Protected
C = Credit Tree
X = Prohibited Species (must be removed)

ADDRESS: 500 WESTINGHOUSE ROAD

REV	DESCRIPTION	DATE	APR

DESIGNED BY: JG
REVIEWED BY: BG
DRAWN BY: JG

BGE
BROWN & GAY ENGINEERS, INC.
1701 DIRECTORS BLVD, SUITE 1000
AUSTIN, TX 78731
TBPE Registration No. F-1046
TEL: 512-879-0400 www.brownjgay.com

ASCEND WESTINGHOUSE GEORGETOWN, TEXAS

EROSION AND SEDIMENTATION CONTROL PLAN (1 OF 2)

STATE OF TEXAS
BRIAN J. GRACE
121846
LICENSED PROFESSIONAL ENGINEER
9/21/2020

2020-41-SDP

500 WESTINGHOUSE ROAD

G:\TXC\Projects\DHI_Communities\7616-00-Westinghouse\LD\01_CADD\01_Shts\02_Site Plan\7616-C-SP-TREE PRESERVATION PLAN.dwg Layout: 22 EROSION AND SEDIMENTATION CONTROL PLAN (1 OF 2) Plotted: 9/21/2020 9:44:04 AM

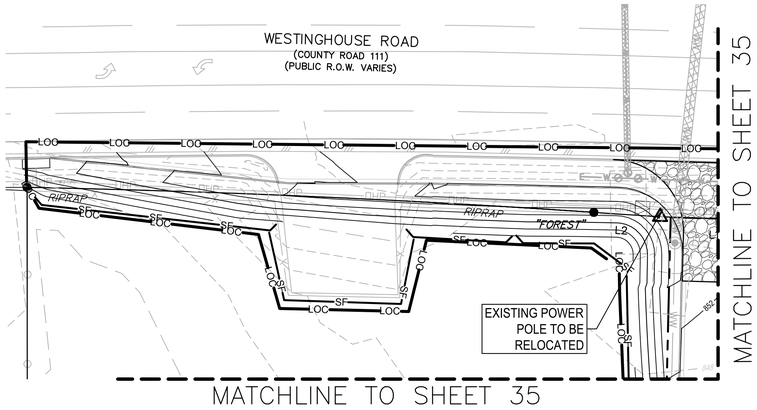

Tree Schedule					
Key	Tree #	Size (individual trunks)	Half Critical Root Zone (in feet)	Species	
~~NP~~	~~1768~~	~~19"~~	~~9.5'~~	~~CEDAR~~	REMOVED
~~NP~~	~~1769~~	~~10"~~	~~5'~~	~~CEDAR~~	REMOVED
~~NP~~	~~1770~~	~~13", 8"~~	~~8.5'~~	~~CEDAR~~	REMOVED
P	5000	14"	7'	BLACK WILLOW	
P	5001	12", 12", 10", 6"	13'	BLACK WILLOW	
C	5002	7", 3"	4.5'	BLACK WILLOW	
P	5003	15", 14"	11'	BLACK WILLOW	
P	5004	13", 8"	8.5'	BLACK WILLOW	
P	5005	11", 10", 4", 3",2"	10.5'	BLACK WILLOW	
P	5006	20", 15"	14'	BLACK WILLOW	
C	5007	10"	5'	BLACK WILLOW	
C	5008	10"	5'	BLACK WILLOW	
P	5009	13"	6.5'	BLACK WILLOW	
P	5010	8", 7", 4", 3", 3"	8.5'	BLACK WILLOW	
P	5011	15", 10", 5", 3", 3"	13.5'	BLACK WILLOW	
P	5012	13", 13", 11", 8" (Laid over)	14.5'	BLACK WILLOW	
C	5013	5", 4", 3"	4.5'	BLACK WILLOW	
C	5014	5", 5", 4"	5'	BLACK WILLOW	

LEGEND
- **P = Protected**
- **HT = Heritage Tree**
- **R = Removal of Protected Tree**
- **R-HT = Removal of Heritage Tree**
- **D = Dead or Diseased**
- **NP = Not Protected**
- **C = Credit Tree**
- **X = Prohibited Species (must be removed)**

LEGEND

- PROPERTY BOUNDARY
- EXISTING MAJOR CONTOUR
- EXISTING MINOR CONTOUR
- PROPOSED MAJOR CONTOUR
- PROPOSED MINOR CONTOUR
- 100 ENGINEER CALCULATED FLOODPLAIN
- LOC LIMITS OF CONSTRUCTION
- SF SILT FENCE
- TP TREE PROTECTION FENCE
- INLET PROTECTION
- STABILIZED CONSTRUCTION ENTRANCE
- CONCRETE WASHOUT AREA
- TEMPORARY SPOILS AND STORAGE AREA
- HYDRO MULCH RESTORATION AREA
- XXX TREE TO REMAIN
- XXX TREE TO BE REMOVED

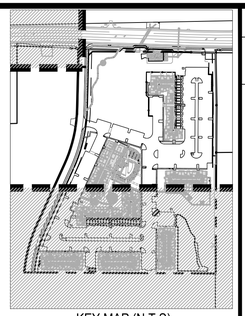

KEY MAP (N.T.S)

N

0 15' 30' 60'
SCALE: 1" = 30'

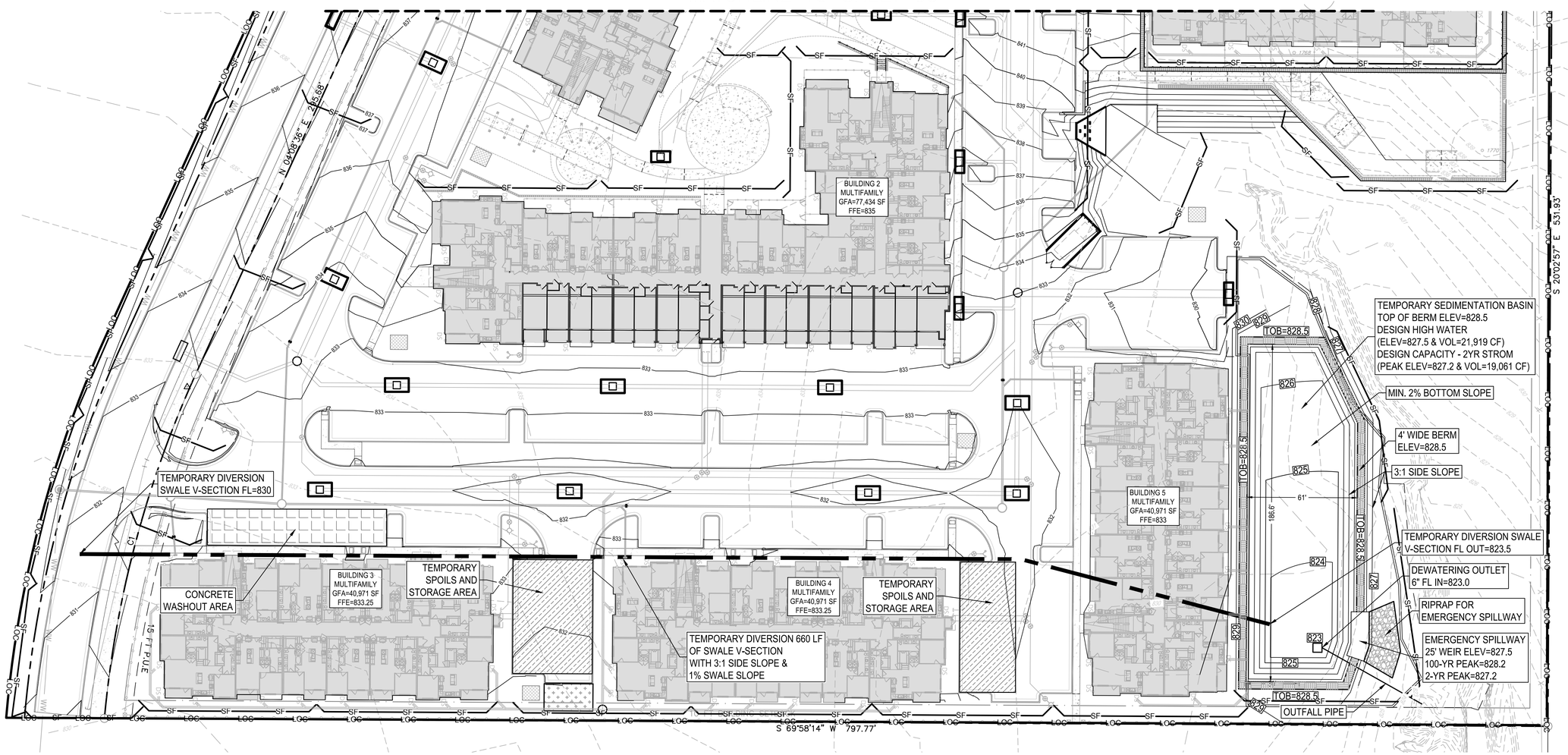

ADDRESS: 500 WESTINGHOUSE ROAD

Temporary Sedimentation Basin Volume						
	Stage (ft msl)	Pond Depth	Cumulative Pond Depth	Area	Volume	Cumulative
	(Elevation)	(ft)	(ft)	(sf)	(cf)	Volume (cf)
	823.00	0.00	0.00	25		
	824.00	1.00	1.00	1,703	864	864
	825.00	1.00	2.00	4,160	2,932	3,796
	826.00	1.00	3.00	7,080	5,620	9,416
	827.00	1.00	4.00	8,797	7,938	17,354
25' EMERGENCY SPILLWAY	827.50	0.50	4.50	9,464	4,565	21,919
	828.00	0.50	5.00	10,148	4,903	26,823
TOP OF BERM	828.50	0.50	5.50	10,850	5,249	32,072

REV	DESCRIPTION	DATE	APR

DESIGNED BY: JG
REVIEWED BY: BG
DRAWN BY: JG

BGE

BROWN & GAY ENGINEERS, INC.
1701 DIRECTORS BLVD, SUITE 1000
AUSTIN, TX 78731
TBPE Registration No. F-1046
TEL: 512-879-0400 www.brownjay.com

500 WESTINGHOUSE ROAD

ASCEND WESTINGHOUSE
GEORGETOWN, TEXAS

EROSION AND SEDIMENTATION CONTROL PLAN (2 OF 2)

STATE OF TEXAS
BRIAN J. GRACE
121846
LICENSED PROFESSIONAL ENGINEER
9/21/2020

2020-41-SDP

G:\TXC\Projects\DHI_Communities\7616-00-Westinghouse\LD\01_CADD\01_Shts\02_Site Plan\7616-C-SP-TREE PRESERVATION PLAN.dwg Layout: 23 EROSION AND SEDIMENTATION CONTROL PLAN (2 OF 2) Plotted: 9/21/2020 9:44:21 AM

GUIDELINES FOR DESIGN AND INSTALLATION OF TEMPORARY EROSION AND SEDIMENTATION CONTROLS

TYPE OF STRUCTURE	REACH LENGTH	MAXIMUM DRAINAGE AREA	SLOPE
SILT FENCE	N/A	2 ACRES	0 – 10%
	200 FEET	2 ACRES	10 – 20%
	100 FEET	1 ACRE	20 – 30%
	50 FEET	1/2 ACRE	> 30%
TRIANGLE FILTER DIKE	100 FEET	1/2 ACRE	< 30% SLOPE
	50 FEET	1/4 ACRE	> 30% SLOPE
ROCK BERM *, **	500 FEET	< 5 ACRES	0 – 10%

* FOR ROCK BERM DESIGN WHERE PARAMETERS ARE OTHER THAN STATED, DRAINAGE AREA CALCULATIONS AND ROCK BERM DESIGN MUST BE SUBMITTED FOR REVIEW.

** HIGH SERVICE ROCK BERMS MAY BE REQUIRED IN AREAS OF ENVIRONMENTAL SIGNIFICANCE AS DETERMINED BY THE CITY OF GEORGETOWN.

The Architect/Engineer assumes responsibility for appropriate use of this standard.

ADOPTED 6/21/2006
CITY OF GEORGETOWN CONSTRUCTION STANDARDS AND DETAILS
TEMPORARY EROSION AND SEDIMENTATION CONTROL GUIDELINES
EC01 — NTS — 1/2003 — MRS — TRB

NOTE: THIS SECTION IS INTENDED TO ASSIST THOSE PERSONS PREPARING WATER POLLUTION ABATEMENT PLANS (WPAP) OR STORM WATER POLLUTION PREVENTION PLANS (SW3P) THAT COMPLY WITH FEDERAL, STATE AND/OR LOCAL STORM WATER REGULATIONS.

1. THE CONTRACTOR TO INSTALL AND MAINTAIN EROSION/SEDIMENTATION CONTROLS AND TREE/NATURAL AREA PROTECTIVE FENCING PRIOR TO ANY SITE PREPARATION WORK (CLEARING, GRUBBING, GRADING, OR EXCAVATION). CONTRACTOR TO REMOVE EROSION/SEDIMENTATION CONTROLS AT THE COMPLETION OF PROJECT AND GRASS RESTORATION.
2. ALL PROJECTS WITHIN THE RECHARGE ZONE OF THE EDWARD'S AQUIFER SHALL SUBMIT A BEST MANAGEMENT PRACTICES AND WATER POLLUTION AND ABATEMENT PLAN TO THE TNRCC FOR APPROVAL PRIOR TO ANY CONSTRUCTION.
3. THE PLACEMENT OF EROSION/SEDIMENTATION CONTROLS TO BE IN ACCORDANCE WITH THE APPROVED EROSION AND SEDIMENTATION CONTROL PLAN AND WATER POLLUTION ABATEMENT PLAN. DEVIATIONS FROM THE APPROVED PLAN MUST BE SUBMITTED TO AND APPROVED BY THE OWNER'S REPRESENTATIVE.
4. ALL PLANTING SHALL BE DONE BETWEEN MAY 1 AND SEPTEMBER 15 EXCEPT AS SPECIFICALLY AUTHORIZED IN WRITING. IF PLANTING IS AUTHORIZED TO BE DONE OUTSIDE THE DATES SPECIFIED, THE SEED SHALL BE PLANTED WITH THE ADDITION OF WINTER FESCUE (KENTUCKY 31) AT A RATE OF 100lb/ACRE. GRASS SHALL BE COMMON BERMUDA GRASS, HULLED, MINIMUM 82% PURE LIVE SEED. ALL GRASS SEED SHALL BE FREE FROM NOXIOUS WEED, GRADE "A" RECENT CROP, RECLEANED AND TREATED WITH APPROPRIATE FUNGICIDE AT TIME OF MIXING. SEED SHALL BE FURNISHED IN SEALED, STANDARD CONTAINERS WITH DEALER'S GUARANTEED ANALYSIS.
5. ALL DISTURBED AREAS TO BE RESTORED AS NOTED IN THE WATER POLLUTION ABATEMENT PLAN.
6. THE PLANTED AREA TO BE IRRIGATED OR SPRINKLED IN A MANNER THAT WILL NOT ERODE THE TOPSOIL, BUT WILL SUFFICIENTLY SOAK THE SOIL TO A DEPTH OF FOUR (4) INCHES. THE IRRIGATION TO OCCUR AT 10-DAY INTERVALS DURING THE FIRST TWO MONTHS TO INSURE GERMINATION AND ESTABLISHMENT OF THE GRASS . RAINFALL OCCURRENCES OF 1/2 INCH OR GREATER TO POSTPONE THE WATERING SCHEDULE ONE WEEK.
7. RESTORATION TO BE ACCEPTABLE WHEN THE GRASS HAS GROWN AT LEAST 1-1/2 INCHES HIGH WITH 95% COVERAGE, PROVIDED NO BARE SPOTS LARGER THAN 25 SQUARE FEET EXIST.
8. A MINIMUM OF FOUR (4) INCHES OF TOPSOIL TO BE PLACED IN ALL AREAS DISTURBED BY CONSTRUCTION.
9. THE CONTRACTOR TO HYDROMULCH OR SOD (AS SHOWN ON PLANS) ALL EXPOSED CUTS AND FILLS UPON COMPLETION OF CONSTRUCTION.
10. EROSION AND SEDIMENTATION CONTROLS TO BE INSTALLED OR MAINTAINED IN A MANNER WHICH DOES NOT RESULT IN SOIL BUILDUP WITHIN TREE DRIPLINE.
11. TO AVOID SOIL COMPACTION, CONTRACTOR SHALL NOT ALLOW VEHICULAR TRAFFIC, PARKING, OR STORAGE OF EQUIPMENT OR MATERIALS IN THE TREE DRIPLINE AREAS.
12. WHERE A FENCE IS CLOSER THAN FOUR (4) FEET TO A TREE TRUNK, PROTECT THE TRUNK WITH STRAPPED-ON PLANKING TO A HEIGHT OF EIGHT (8) FEET (OR TO THE LIMITS OF LOWER BRANCHING) IN ADDITION TO THE FENCING.
13. TREES TO BE REMOVED IN A MANNER WHICH DOES NOT IMPACT TREES TO BE PRESERVED.
14. ANY ROOT EXPOSED BY CONSTRUCTION ACTIVITY TO BE PRUNED FLUSH WITH THE SOIL. BACKFILL ROOT AREAS WITH GOOD QUALITY TOPSOIL AS SOON AS POSSIBLE. IF EXPOSED ROOT AREAS ARE NOT BACKFILLED WITHIN TWO DAYS, COVER THEM WITH ORGANIC MATERIAL IN A MANNER WHICH REDUCES SOIL TEMPERATURE AND MINIMIZES WATER LOSS DUE TO EVAPORATION.
15. CONTRACTOR TO PRUNE VEGETATION TO PROVIDE CLEARANCE FOR STRUCTURES, VEHICULAR TRAFFIC, AND EQUIPMENT BEFORE DAMAGE OCCURS (RIPPING OF BRANCHES, ETC.). ALL FINISHED PRUNING TO BE DONE ACCORDING TO RECOGNIZED, APPROVED STANDARDS OF THE INDUSTRY (REFERENCE THE "NATIONAL ARBORIST ASSOCIATION PRUNING STANDARDS FOR SHADE TREES").
16. THE CONTRACTOR IS TO INSPECT THE CONTROLS AT WEEKLY INTERVALS AND AFTER EVERY RAINFALL EXCEEDING 1/4 INCH TO VERIFY THAT THEY HAVE NOT BEEN SIGNIFICANTLY DISTURBED. ANY ACCUMULATED SEDIMENT AFTER A SIGNIFICANT RAINFALL TO BE REMOVED AND PLACED IN THE OWNER DESIGNATED SPOIL DISPOSAL SITE. THE CONTRACTOR TO CONDUCT PERIODIC INSPECTIONS OF ALL EROSION/SEDIMENTATION CONTROLS AND TO MAKE ANY REPAIRS OR MODIFICATIONS NECESSARY TO ASSURE CONTINUED EFFECTIVE OPERATION OF EACH DEVICE.
17. WHERE THERE IS TO BE AN APPROVED GRADE CHANGE, IMPERMEABLE PAVING SURFACE, TREE WELL, OR OTHER SUCH SITE DEVELOPMENT IMMEDIATELY ADJACENT TO A PROTECTED TREE, ERECT THE FENCE APPROXIMATELY TWO TO FOUR FEET (2'-4') BEHIND THE AREA IN QUESTION.
18. NO ABOVE AND/OR BELOW GROUND TEMPORARY FUEL STORAGE FACILITIES TO BE STORED ON THE PROJECT SITE.
19. IF EROSION AND SEDIMENTATION CONTROL SYSTEMS ARE EXISTING FROM PRIOR CONTRACTS, OWNER'S REPRESENTATIVE AND THE CONTRACTOR TO EXAMINE THE EXISTING EROSION AND SEDIMENTATION CONTROL SYSTEMS FOR DAMAGE PRIOR TO CONSTRUCTION. ANY DAMAGE TO PREEXISTING EROSION AND SEDIMENTATION CONTROLS NOTED TO BE REPAIRED AT OWNERS EXPENSE.
20. INTENTIONAL RELEASE OF VEHICLE OR EQUIPMENT FLUIDS ONTO THE GROUND IS NOT ALLOWED. CONTAMINATED SOIL RESULTING FROM ACCIDENTAL SPILL TO BE REMOVED AND DISPOSED OF PROPERLY.

The Architect/Engineer assumes responsibility for appropriate use of this standard.

ADOPTED 6/21/2006
CITY OF GEORGETOWN CONSTRUCTION STANDARDS AND DETAILS
EROSION AND SEDIMENTATION AND TREE PROTECTION NOTES
EC01A — NTS — 1/2003 — MRS — TRB

The Architect/Engineer assumes responsibility for appropriate use of this standard.

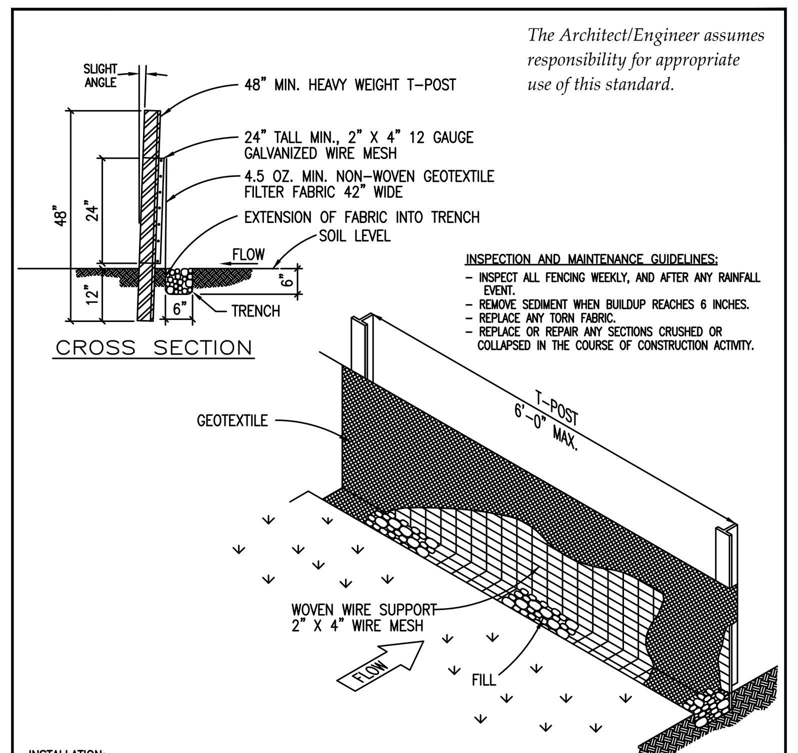

INSPECTION AND MAINTENANCE GUIDELINES:
- INSPECT ALL FENCING WEEKLY, AND AFTER ANY RAINFALL EVENT.
- REMOVE SEDIMENT WHEN BUILDUP REACHES 6 INCHES.
- REPLACE ANY TORN FABRIC.
- REPLACE OR REPAIR ANY SECTIONS CRUSHED OR COLLAPSED IN THE COURSE OF CONSTRUCTION ACTIVITY.

INSTALLATION:
- LAYOUT THE SILT FENCE FOLLOWING AS CLOSELY AS POSSIBLE TO THE CONTOUR.
- CLEAR THE GROUND OF DEBRIS, ROCKS, PLANTS (INCLUDING GRASSES TALLER THAN 2") TO PROVIDE A SMOOTH FLOW APPROACH SURFACE. EXCAVATE 6" DEEP X 6" WIDE TRENCH ON UPSTREAM SIDE OF FACE PER PLANS.
- DRIVE THE HEAVY DUTY T-POST AT LEAST 12 INCHES INTO THE GROUND AND AT A SLIGHT ANGLE TOWARDS THE FLOW.
- ATTACH THE 2" X 4" 12 GAUGE WELDED WIRE MESH TO THE T-POST WITH 11 1/2 GAUGE GALVANIZED T-POST CLIPS. THE TOP OF THE WIRE TO BE 24" ABOVE GROUND LEVEL. THE WELDED WIRE MESH TO BE OVERLAPPED 6" AND TIED AT LEAST 6 TIMES WITH HOG RINGS.
- THE SILT FENCE TO BE INSTALLED WITH A SKIRT A MINIMUM OF 6" WIDE PLACED ON THE UPHILL SIDE OF THE FENCE INSIDE EXCAVATED TRENCH. THE FABRIC TO OVERLAP THE TOP OF THE WIRE BY 1".
- ANCHOR THE SILT FENCE BY BACKFILLING WITH EXCAVATED DIRT AND ROCKS (NOT LARGER THAN 2").
- GEOTEXTILE SPLICES SHOULD BE A MINIMUM OF 18" WIDE ATTACHED IN AT LEAST 6 PLACES. SPLICES IN CONCENTRATED FLOW AREAS WILL NOT BE ACCEPTED.
- SILT FENCE SHALL BE REMOVED WHEN THE SITE IS COMPLETELY STABILIZED SO AS NOT TO BLOCK OR IMPEDE STORM FLOW OR DRAINAGE.

ADOPTED 6/21/2006
CITY OF GEORGETOWN CONSTRUCTION STANDARDS AND DETAILS
SILT FENCE DETAIL
EC02 — NTS — 1/2003 — MRS — TRB

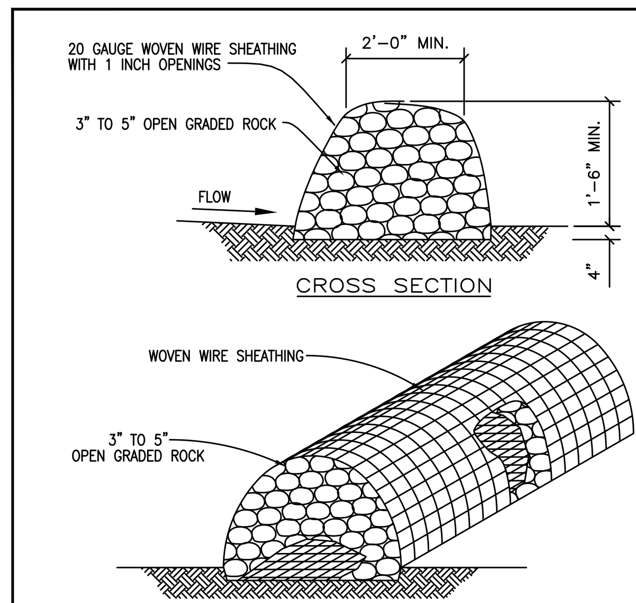

INSTALLATION:
- LAYOUT THE ROCK BERM FOLLOWING AS CLOSELY AS POSSIBLE TO THE CONTOUR.
- CLEAR THE GROUND OF DEBRIS, ROCKS OR PLANTS THAT WILL INTERFERE WITH INSTALLATION.
- PLACE WOVEN WIRE FABRIC ON THE GROUND ALONG THE PROPOSED INSTALLATION WITH ENOUGH OVERLAP TO COMPLETELY ENCIRCLE THE FINISHED SIZE OF THE BERM.
- PLACE THE ROCK ALONG THE CENTER OF THE WIRE TO THE DESIGNATED HEIGHT.
- WRAP THE STRUCTURE WITH THE PREVIOUSLY PLACED WIRE MESH SECURE ENOUGH SO THAT WHEN WALKED ACROSS THE STRUCTURE RETAINS IT'S SHAPE.
- SECURE WITH TIE WIRE.
- THE ENDS OF THE BERM SHOULD BE TIED INTO EXISTING UPSLOPE GRADE AND THE BERM SHOULD BE BURIED IN A TRENCH APPROX. 4 INCHES DEEP TO PREVENT FAILURE OF THE CONTROL.
- THE ROCK BERM SHOULD BE LEFT IN PLACE UNTIL ALL UPSTREAM AREAS ARE STABILIZED AND ACCUMULATED SILT REMOVED.

INSPECTION AND MAINTENANCE GUIDELINES:
- INSPECTION SHOULD BE MADE WEEKLY AND AFTER EACH RAINFALL EVENT BY THE RESPONSIBLE PARTY. FOR INSTALLATIONS IN STREAMBEDS, ADDITIONAL DAILY INSPECTIONS SHOULD BE MADE.
- REMOVE SEDIMENT AND OTHER DEBRIS WHEN BUILDUP REACHES 6 INCHES AND DISPOSE OF THE ACCUMULATED SILT IN AN APPROVED MANNER.
- REPAIR ANY LOOSE WIRE SHEATHING.
- THE BERM SHOULD BE RESHAPED AS NEEDED DURING INSPECTION.
- THE BERM SHOULD BE REPLACED WHEN THE STRUCTURE CEASES TO FUNCTION AS INTENDED DUE TO SILT ACCUMULATION AMONG THE ROCKS, WASHOUT, CONSTRUCTION TRAFFIC DAMAGE, ETC.

The Architect/Engineer assumes responsibility for appropriate use of this standard.

ADOPTED 6/21/2006
CITY OF GEORGETOWN CONSTRUCTION STANDARDS AND DETAILS
ROCK BERM DETAIL
EC03 — NTS — 1/2003 — MRS — TRB

The Architect/Engineer assumes responsibility for appropriate use of this standard.

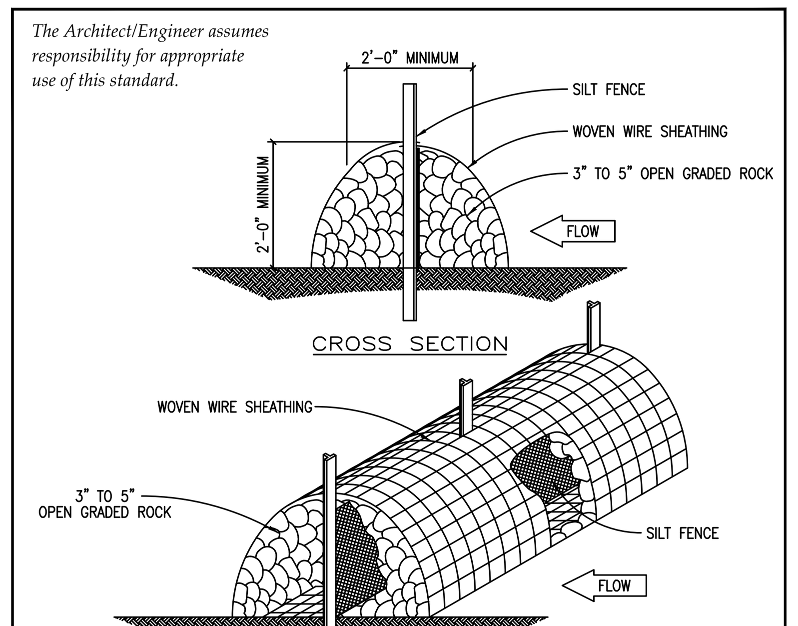

INSTALLATION:
- LAYOUT THE ROCK BERM FOLLOWING AS CLOSELY AS POSSIBLE TO THE CONTOUR.
- CLEAR THE GROUND OF DEBRIS, ROCKS OR PLANTS THAT WILL INTERFERE WITH INSTALLATION.
- PLACE WOVEN WIRE FABRIC ON THE GROUND ALONG THE PROPOSED INSTALLATION WITH ENOUGH OVERLAP TO COMPLETELY ENCIRCLE THE FINISHED SIZE OF THE BERM.
- INSTALL THE SILT FENCE ALONG THE CENTER OF THE PROPOSED BERM PLACEMENT. INSTALLATION SHOULD BE AS DESCRIBED IN DRAWING NO. EC-02 "SILT FENCE DETAIL".
- PLACE THE ROCK ALONG THE CENTER OF THE WIRE AND ON BOTH SIDES OF THE SILT FENCE TO THE DESIGNATED HEIGHT.
- WRAP THE STRUCTURE WITH THE PREVIOUSLY PLACED WIRE MESH SECURE ENOUGH SO THAT WHEN WALKED ACROSS THE STRUCTURE RETAINS IT'S SHAPE.
- SECURE WITH TIE WIRE.
- THE ROCK BERM SHOULD BE LEFT IN PLACE UNTIL ALL UPSTREAM AREAS ARE STABILIZED AND ACCUMULATED SILT REMOVED.

INSPECTION AND MAINTENANCE GUIDELINES:
- INSPECTION SHOULD BE MADE WEEKLY AND AFTER EACH RAINFALL EVENT BY THE CONTRACTOR. FOR THE INSTALLATIONS IN STREAMBEDS, ADDITIONAL DAILY INSPECTIONS SHOULD BE MADE ON ROCK BERM.
- REMOVE SEDIMENT AND OTHER DEBRIS WHEN BUILDUP REACHES 6 INCHES AND DISPOSE OF THE ACCUMULATED SILT IN AN APPROVED MANNER.
- REPAIR ANY LOOSE WIRE SHEATHING.
- THE BERM SHOULD BE RESHAPED AS NEEDED DURING INSPECTION.
- THE BERM SHOULD BE REPLACES WHEN THE STRUCTURE CEASES TO FUNCTION AS INTENDED DUE TO SILT ACCUMULATION AMONG THE ROCKS, WASHOUT, CONSTRUCTION TRAFFIC DAMAGE, ETC.

ADOPTED 6/21/2006
CITY OF GEORGETOWN CONSTRUCTION STANDARDS AND DETAILS
HIGH SERVICE ROCK BERM DETAIL
EC04 — NTS — 1/2003 — MRS — TRB

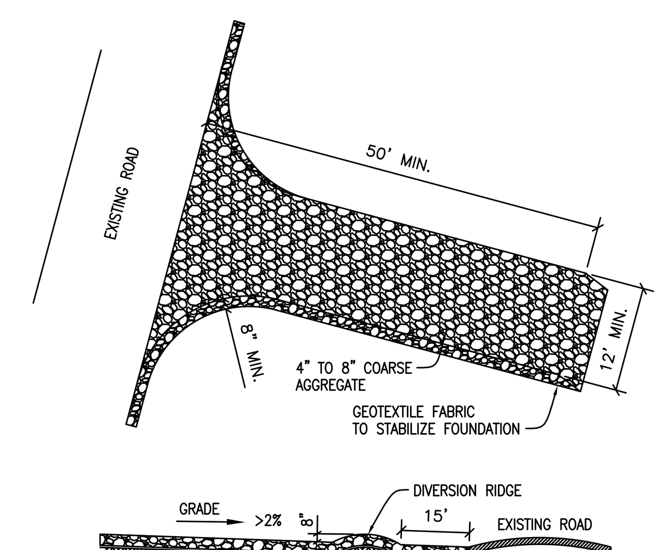

INSTALLATION:
- CLEAR THE AREA OF DEBRIS, ROCKS OR PLANTS THAT WILL INTERFERE WITH INSTALLATION.
- GRADE THE AREA FOR THE ENTRANCE TO FLOW BACK ON TO THE CONSTRUCTION SITE. RUNOFF FROM THE STABILIZED CONSTRUCTION
- PLACE GEOTEXTILE FABRIC AS APPROVED BY THE CITY.
- PLACE ROCK AS APPROVED BY THE CITY.

INSPECTIONS AND MAINTENANCE GUIDELINES:
- THE ENTRANCE SHOULD BE MAINTAINED IN A CONDITION, WHICH WILL PREVENT TRACKING OR FLOWING OF SEDIMENT ONTO PUBLIC RIGHTS-OF-WAY. THIS MAY REQUIRE PERIODIC TOP DRESSING WITH ADDITIONAL STONE AS CONDITIONS DEMAND AND REPAIR AND/OR CLEANOUT OF ANY MEASURES USED TO TRAP SEDIMENT.
- ALL SEDIMENT SPILLED, DROPPED, WASHED OR TRACKED ON TO PUBLIC RIGHTS-OF-WAY SHOULD BE REMOVED IMMEDIATELY BY CONTRACTOR.
- WHEN NECESSARY, WHEELS SHOULD BE CLEANED TO REMOVE SEDIMENT PRIOR TO ENTRANCE ONTO PUBLIC RIGHTS-OF-WAY.
- WHEN WASHING IS REQUIRED, IT SHOULD BE DONE ON AN AREA STABILIZED WITH CRUSHED STONE THAT DRAINS INTO AN APPROVED SEDIMENT TRAP OR SEDIMENT BASIN.
- ALL SEDIMENT SHOULD BE PREVENTED FROM ENTERING ANY STORM DRAIN, DITCH OR WATER COURSE BY USING APPROVED METHODS.

The Architect/Engineer assumes responsibility for appropriate use of this standard.

ADOPTED 6/21/2006
CITY OF GEORGETOWN CONSTRUCTION STANDARDS AND DETAILS
STABILIZED CONSTRUCTION ENTRANCE
EC06 — NTS — 1/2003 — MRS — TRB

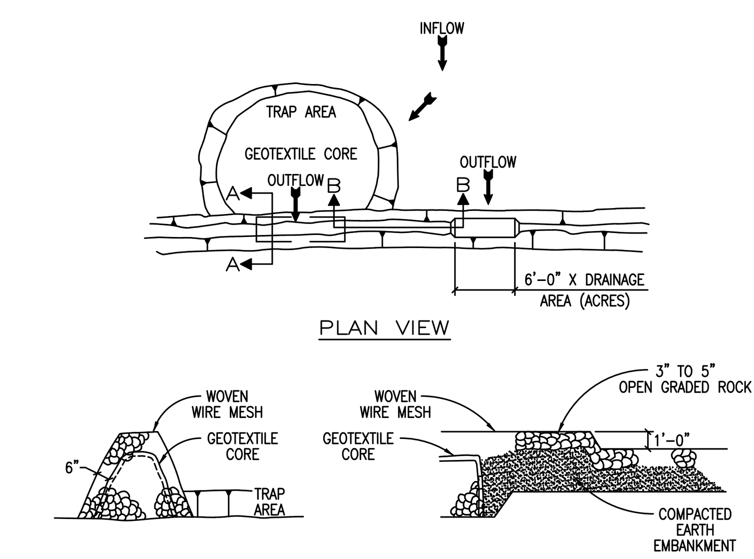

INSTALLATION:
- LOCATE THE SEDIMENT TRAP SO AS TO DISTURB AS FEW TREES AS POSSIBLE.
- CLEAR AND GRUB THE AREA UNDER THE EMBANKMENT OF ALL VEGETATION AND ROOT MATS.
- LAYOUT THE WIRE MESH AND THEN THE GEOTEXTILE FABRIC.
- CONSTRUCT THE GEOTEXTILE CORE AND CORRESPONDING ROCK EMBANKMENT TO THE DESIGNATED HEIGHT AND CONFIGURATION.
- WRAP THE STRUCTURE WITH THE PREVIOUSLY PLACED WIRE MESH SECURE ENOUGH SO THAT WHEN WALKED ACROSS THE STRUCTURE RETAINS IT'S SHAPE. SECURE WITH TIE WIRE.
- PLACE THE EMBANKMENT MATERIAL IN 8 TO 12 INCH LIFTS AND MACHINE COMPACT.

INSPECTION AND MAINTENANCE GUIDELINES:
- INSPECTION SHOULD BE MADE WEEKLY AND AFTER EACH RAINFALL. CHECK THE EMBANKMENT, SPILLWAYS, AND OUTLET FOR EROSION DAMAGE AND INSPECT THE EMBANKMENT FOR PIPING AND SETTLEMENT. REPAIR SHOULD BE MADE PROMPTLY AS NEEDED BY THE CONTRACTOR.
- TRASH AND OTHER DEBRIS SHOULD BE REMOVED AND THE TRAP RESTORED TO ITS ORIGINAL DIMENSIONS WHEN THE SEDIMENT HAS ACCUMULATED TO HALF OF THE DESIGN DEPTH OF THE TRAP.
- SEDIMENT REMOVED FROM THE TRAP SHOULD BE DEPOSITED IN AN APPROVED SPOILS AREA AND IN SUCH A MANNER THAT IT WILL NOT CAUSE ADDITIONAL SILTATION.

The Architect/Engineer assumes responsibility for appropriate use of this standard.

ADOPTED 6/21/2006
CITY OF GEORGETOWN CONSTRUCTION STANDARDS AND DETAILS
SEDIMENT TRAP DETAIL
EC07 — NTS — 1/2003 — MRS — TRB

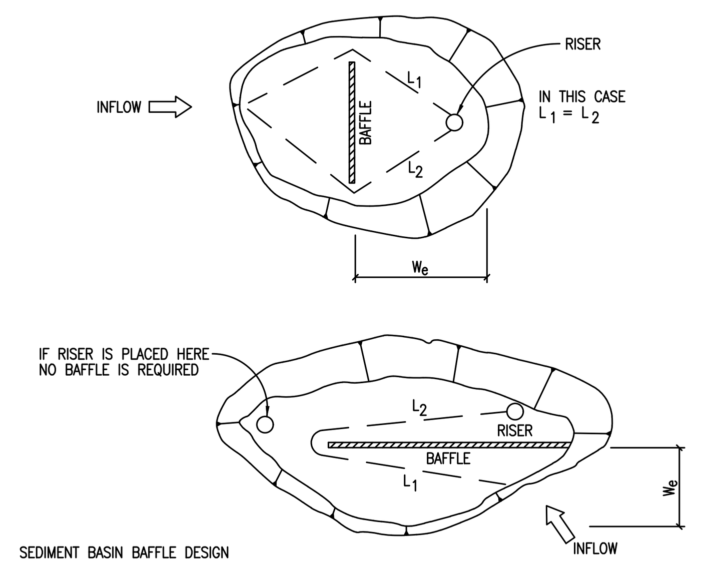

SEDIMENT BASIN BAFFLE DESIGN

$W_e = A / (L_1 + L_2)$

W_e = EFFECTIVE WIDTH OF BASIN

A = SURFACE AREA OF BASIN WHEN FILLED TO RISER CREST

L_1, L_2 = SHORTEST TRAVEL DISTANCE AROUND THE BAFFLE FROM INLET TO OUTLET

INSPECTION AND MAINTENANCE GUIDELINES:
- INSPECTION SHOULD BE MADE WEEKLY AND AFTER EACH RAINFALL. CHECK THE EMBANKMENT, SPILLWAYS, AND OUTLET FOR EROSION DAMAGE, AND INSPECT THE EMBANKMENT FOR PIPING AND SETTLEMENT. REPAIR SHOULD BE MADE PROMPTLY AS NEEDED BY THE CONTRACTOR.
- TRASH AND OTHER DEBRIS SHOULD BE REMOVED AFTER EACH RAINFALL TO PREVENT CLOGGING OF THE OUTLET STRUCTURE.
- ACCUMULATED SILT SHOULD BE REMOVED AND THE BASIN SHOULD BE RE-GRADED TO ITS ORIGINAL DIMENSIONS AT SUCH POINT THAT THE CAPACITY OF THE IMPOUNDMENT HAS BEEN REDUCED TO 1/2 OF ITS ORIGINAL STORAGE CAPACITY.
- THE REMOVED SEDIMENT SHOULD BE STOCKPILED OR REDISTRIBUTED IN AREAS THAT ARE PROTECTED FROM EROSION.

The Architect/Engineer assumes responsibility for appropriate use of this standard.

ADOPTED 6/21/2006
CITY OF GEORGETOWN CONSTRUCTION STANDARDS AND DETAILS
SEDIMENT BASIN BAFFLE DESIGN
EC08 — NTS — 1/2003 — MRS — TRB

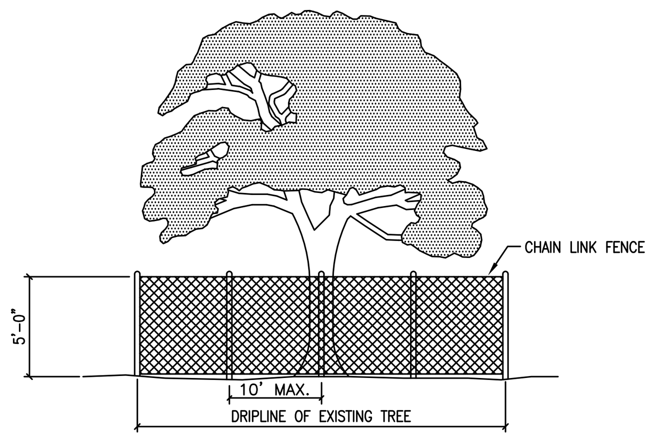

NOTES:
1. TREE PROTECTION FENCES SHALL BE INSTALLED PRIOR TO THE COMMENCEMENT OF ANY SITE PREPARATION WORK (CLEARING, GRUBBING OR GRADING).
2. FENCES SHALL COMPLETELY SURROUND THE TREE, OR CLUSTERS OF TREES; WILL BE LOCATED AT THE OUTERMOST LIMIT OF THE TREE BRANCHES (DRIPLINE), AND WILL BE MAINTAINED THROUGHOUT THE CONSTRUCTION PROJECT IN ORDER TO PREVENT THE FOLLOWING:
   A. SOIL COMPACTION IN THE ROOT ZONE AREA RESULTING FROM VEHICULAR TRAFFIC, OR STORAGE OF EQUIPMENT OR MATERIALS.
   B. ROOT ZONE DISTURBANCES DUE TO GRADE CHANGES (GREATER THAN SIX INCHES (6") CUT OR FILL, OR TRENCHING NOT REVIEWED AND AUTHORIZED BY THE CITY.
   C. WOUNDS TO EXPOSED ROOTS, TRUNKS OR LIMBS BY MECHANICAL EQUIPMENT.
   D. OTHER ACTIVITIES DETRIMENTAL TO TREES, SUCH AS CHEMICAL STORAGE, CEMENT TRUCK CLEANING AND FIRE.
3. EXCEPTIONS TO INSTALLING FENCES AT TREE DRIPLINES MAY BE PERMITTED IN THE FOLLOWING CASES:
   A. WHERE PERMEABLE PAVING IS TO BE INSTALLED, ERECT THE FENCE AT THE OUTER LIMITS OF THE PERMEABLE PAVING AREA.
   B. WHERE TREES ARE CLOSE TO PROPOSED BUILDINGS, ERECT THE FENCE NO CLOSER THAN SIX FEET (6'-0") TO BUILDING.

The Architect/Engineer assumes responsibility for appropriate use of this standard.

ADOPTED 6/21/2006
CITY OF GEORGETOWN CONSTRUCTION STANDARDS AND DETAILS
TREE PROTECTION – CHAIN LINK FENCE
EC09 — NTS — 1/2003 — MRS — TRB

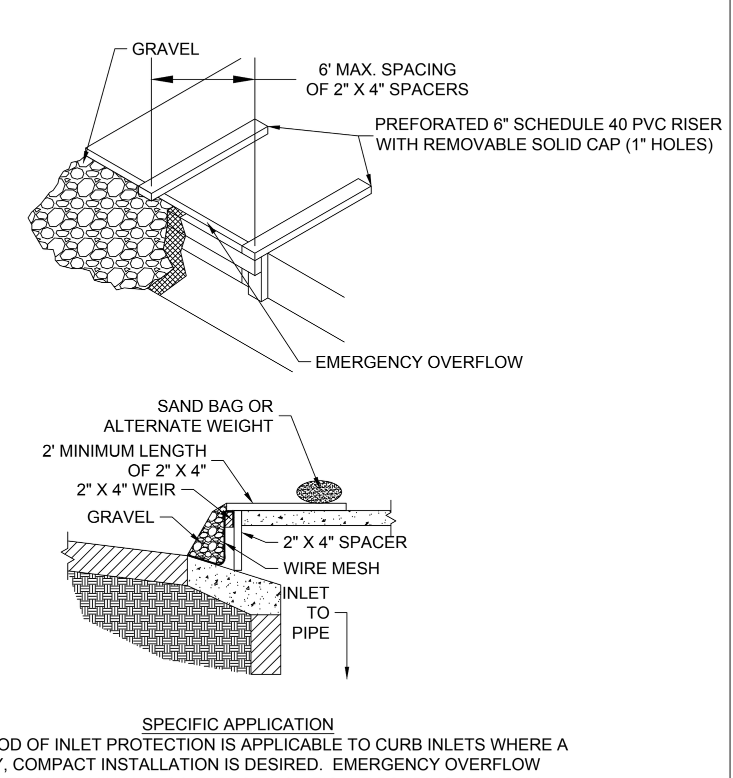

SPECIFIC APPLICATION

THIS METHOD OF INLET PROTECTION IS APPLICABLE TO CURB INLETS WHERE A STURDY, COMPACT INSTALLATION IS DESIRED. EMERGENCY OVERFLOW CAPABILITIES ARE MINIMAL, SO EXPECT SIGNIFICANT PONDING WITH THIS MEASURE.

INLET PROTECTION

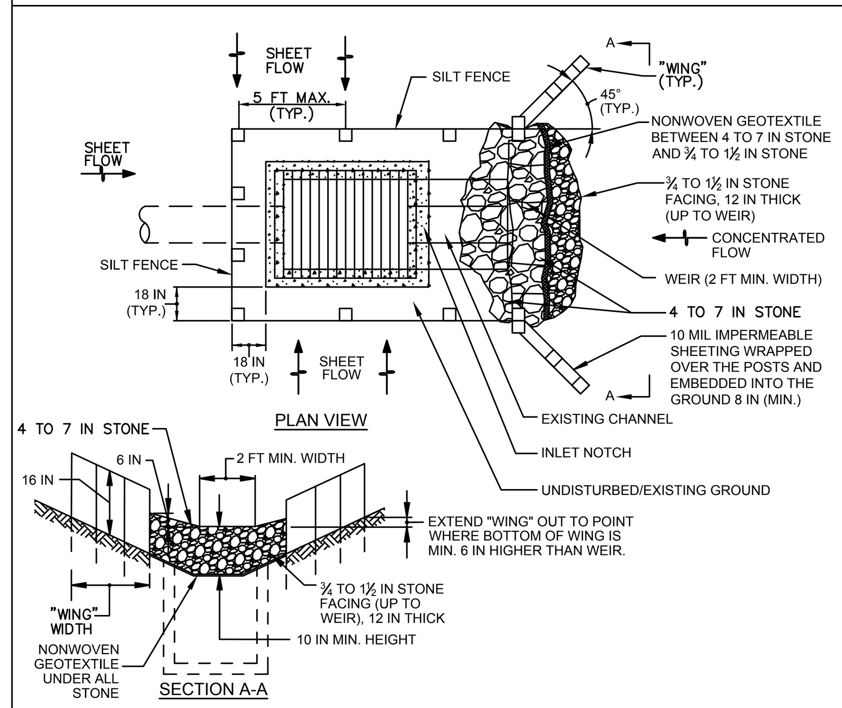

CONSTRUCTION SPECIFICATIONS

1. USE NONWOVEN GEOTEXTILE AS SPECIFIED IN CITY OF AUSTIN SPECIFICATION 620S.
2. INSTALL SILT FENCE ON ALL SIDES OF INLET RECEIVING SHEET FLOW. FENCE IS TO BE INSTALLED IN ACCORDANCE WITH SILT FENCE DETAIL 642S.
3. INSTALL STONE STRUCTURE WITH THE WEIR 10 INCHES ABOVE THE INVERT OF THE CHANNEL AND THE WEIR OPENING THE SAME WIDTH AS THE CHANNEL BOTTOM OR 2 FEET MINIMUM. USE CLEAN 4 TO 7 INCH STONE OR EQUIVALENT RECYCLED CONCRETE. PLACE NONWOVEN GEOTEXTILE ON THE UPSTREAM FACE AND COVER WITH A 12 INCH THICK LAYER OF CLEAN ¾ TO 1½ INCH STONE OR EQUIVALENT RECYCLED CONCRETE.
4. STORM DRAIN INLET PROTECTION REQUIRES FREQUENT MAINTENANCE. REMOVE ACCUMULATED SEDIMENT AFTER EACH RAIN EVENT TO MAINTAIN FUNCTION AND AVOID PREMATURE CLOGGING. IF INLET PROTECTION DOES NOT COMPLETELY DRAIN WITHIN 24 HOURS AFTER A STORM EVENT, IT IS CLOGGED. WHEN THIS OCCURS, REMOVE ACCUMULATED SEDIMENT AND CLEAN, OR REPLACE GEOTEXTILE AND STONE.

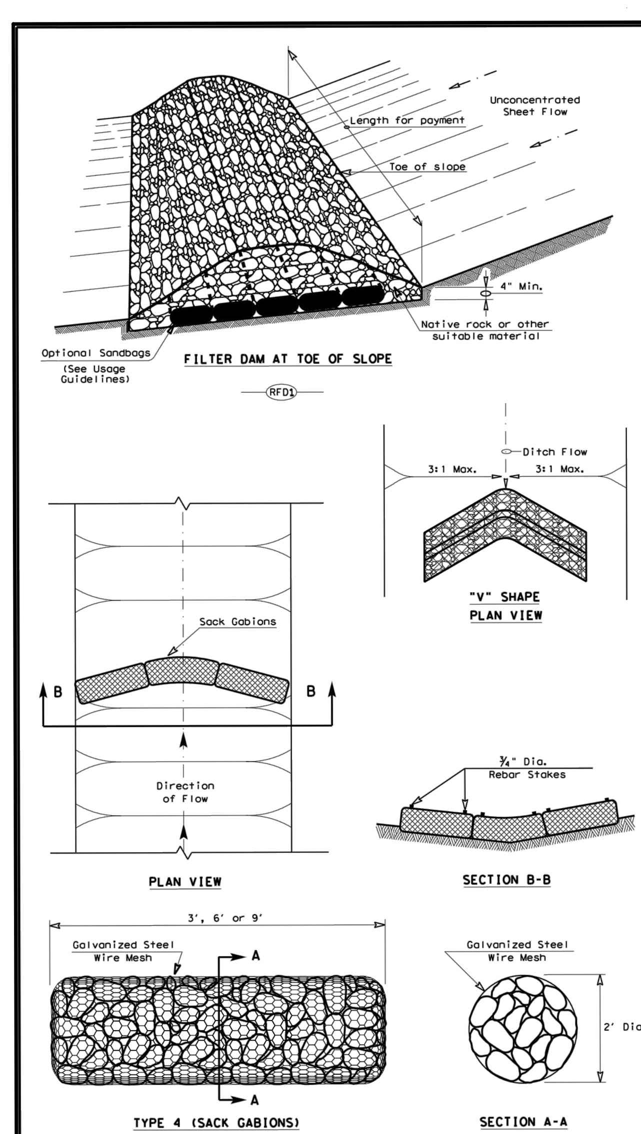

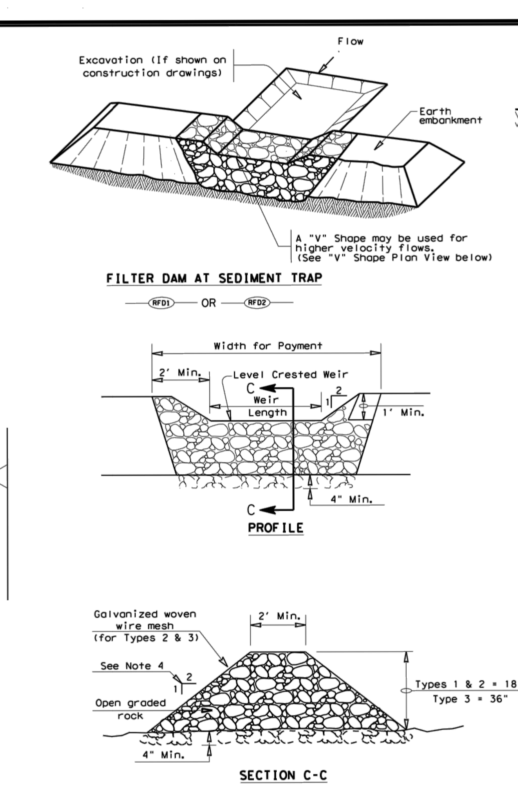

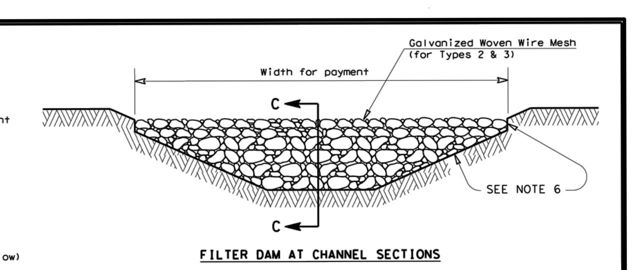

ROCK FILTER DAM USAGE GUIDELINES

Rock Filter Dams should be constructed downstream from disturbed areas to intercept sediment from overland runoff and/or concentrated flow. The dams should be sized to filter a maximum flow through rate of 60 GPM/FT² of cross sectional area. A 2 year storm frequency may be used to calculate the flow rate.

Type 1 (18" high with no wire mesh) (3" to 6" aggregate): Type 1 may be used at the toe of slopes, around inlets, in small ditches, and at dike or swale outlets. This type of dam is recommended to control erosion from a drainage area of 5 acres or less. Type 1 may not be used in concentrated high velocity flows (approximently 8 Ft/Sec or more) in which aggregate wash out may occur. Sandbags may be used at the embedded foundation (4" deep min.) for better filtering efficiency of low flows if called for on the plans or directed by the Engineer.

Type 2 (18" high with wire mesh) (3" to 6" aggregate): Type 2 may be used in ditches and at dike or swale outlets.

Type 3 (36" high with wire mesh) (4" to 8" aggregate): Type 3 may be used in stream flow and should be secured to the stream bed.

Type 4 (Sack gabions) (3" to 6" aggregate): Type 4 May be used in ditches and smaller channels to form an erosion control dam.

Type 5: Provide rock filter dams as shown on plans.

GENERAL NOTES

1. If shown on the plans or directed by the Engineer, filter dams should be placed near the toe of slopes where erosion is anticipated, upstream and/or downstream at drainage structures, and in roadway ditches and channels to collect sediment.
2. Materials (aggregate, wire mesh, sandbags, etc.) shall be as indicated by the specification for "Rock Filter Dams for Erosion and Sedimentation Control".
3. The rock filter dam dimensions shall be as indicated on the SW3P plans.
4. Side slopes should be 2:1 or flatter. Dams within the safety zone shall have sideslopes of 6:1 or flatter.
5. Maintain a minimum of 1' between top of rock filter dam weir and top of embankment for filter dams at sediment traps.
6. Filter dams should be embedded a minimum of 4" into existing ground.
7. The sediment trap for ponding of sediment laden runoff shall be of the dimensions shown on the plans.
8. Rock filter dam types 2 & 3 shall be secured with 20 gauge galvanized woven wire mesh with 1" diameter hexagonal openings. The aggregate shall be placed on the mesh to the height & slopes specified. The mesh shall be folded at the upstream side over the aggregate and tightly secured to itself on the downstream side using wire ties or hog rings. For in stream use, the mesh should be secured or staked to the stream bed prior to aggregate placement.
9. Sack Gabions should be staked down with ¾" dia. rebar stakes, and have a double-twisted hexagonal weave with a nominal mesh opening of 2 ½" x 3 ¼".
10. Flow outlet should be onto a stabilized area (vegetation, rock, etc.).
11. The guidelines shown hereon are suggestions only and may be modified by the Engineer.

PLAN SHEET LEGEND

Type 1 Rock Filter Dam	RFD1
Type 2 Rock Filter Dam	RFD2
Type 3 Rock Filter Dam	RFD3
Type 4 Rock Filter Dam	RFD4

Texas Department of Transportation — Design Division Standard

TEMPORARY EROSION, SEDIMENT AND WATER POLLUTION CONTROL MEASURES
ROCK FILTER DAMS
EC(2)-16

FILE: ec216 — DN: TxDOT — CK: KM — DW: VP — DN/CK: LS
© TxDOT: JULY 2016 — CONT — SECT — JOB — HIGHWAY
REVISIONS — DIST — COUNTY — SHEET NO.

THE LOCATION OF EXISTING UNDERGROUND UTILITIES ARE SHOWN IN AN APPROXIMATE WAY ONLY. THE CONTRACTOR SHALL DETERMINE THE EXACT LOCATION OF ALL EXISTING UTILITIES BEFORE COMMENCING WORK. HE AGREES TO BE FULLY RESPONSIBLE FOR ANY AND ALL DAMAGES WHICH MIGHT BE OCCASIONED BY HIS FAILURE TO EXACTLY LOCATE ADN PRESERVE ANY AND ALL UNDERGROUND UTILITIES.

Know what's below. Call before you dig.

ADDRESS: 500 WESTINGHOUSE ROAD

REV	DESCRIPTION	DATE	APR

DESIGNED BY: JG
REVIEWED BY: BG
DRAWN BY: JG

BGE
BROWN & GAY ENGINEERS, INC.
1701 DIRECTORS BLVD., SUITE 1000
AUSTIN, TX 78731
TBPE Registration No. F-1046
TEL: 512-879-0400 www.browngay.com

500 WESTINGHOUSE ROAD

ASCEND WESTINGHOUSE
GEORGETOWN, TEXAS

EROSION CONTROL DETAILS

STATE OF TEXAS — BRIAN J. GRACE — 121846 — LICENSED PROFESSIONAL ENGINEER — 9/21/2020

2020-41-SDP

SHEET 37 OF 76

G:\TXC\Projects\DHI_Communities\7616-00-Westinghouse\LD\01_CADD\01_Shts\02_Site Plan\7616-C-SP-DETL-EROSION.dwg   Layout: 24 EROSION CONTROL DETAILS   Plotted: 9/21/2020 9:44:33 AM

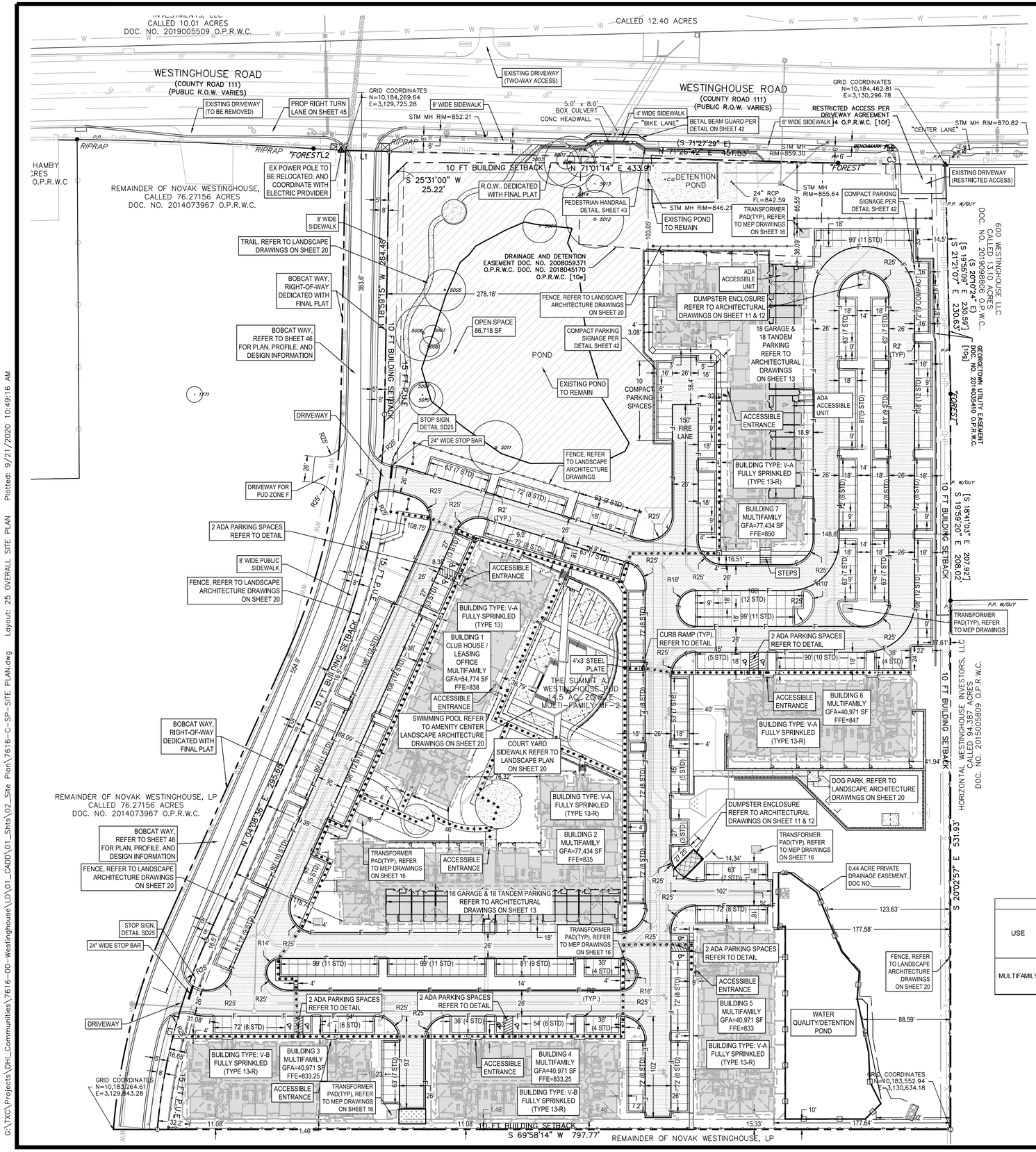

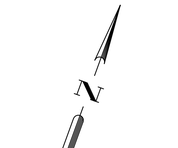

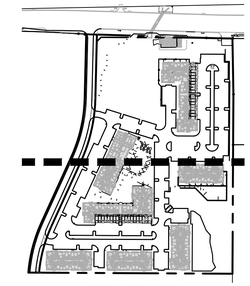

KEY MAP (N.T.S)

LEGEND

- PROPERTY BOUNDARY
- BUILDING SETBACK
- SIDEWALK
- LIGHT DUTY PAVEMENT
- MEDIUM DUTY PAVEMENT
- HEAVY DUTY PAVEMENT
- OPEN SPACE
- TREE TO REMAIN
- TREE TO BE REMOVED

NOTES:

1. ALL DIMENSIONS TO FACE OF CURB UNLESS OTHERWISE NOTED.
2. ALL LIGHTING FIXTURES SHALL BE DESIGNED TO COMPLETELY CONCEAL AND FULLY SHIELD. WITHIN AN OPAQUE HOUSING, THE LIGHT SOURCE FROM VISIBILITY FROM ANY STREET RIGHT-OF-WAY. THE CONE OF LIGHT SHALL NOT CROSS ANY ADJACENT PROPERTY LINE. THE ILLUMINATION SHALL NOT EXCEED 2 FOOT CANDLES AT A HEIGHT OF THREE FEET AT THE PROPERTY LINE. ONLY INCANDESCENT, FLUORESCENT, COLOR-CORRECTED HIGH-PRESSURE SODIUM OR METAL HALIDE MAY BE USED. ALL VEHICLE OR PEDESTRIAN ACCESS SHALL BE SUFFICIENTLY LIGHTED TO ENSURE SECURITY OF PROPERTY AND PERSONS.
3. ALL ROOF, WALL AND GROUND MOUNTED MECHANICAL EQUIPMENT MUST BE SCREENED IN ACCORDANCE WITH CHAPTER 8 OF THE UDC. IF ROOF AND WALL MOUNTED EQUIPMENT OF ANY TYPE INCLUDING DUCT WORK AND LARGE VENTS IS PROPOSED IT SHALL BE SHOWN ON THE SITE PLAN AND SCREENING IDENTIFIED. SCREENING OF MECHANICAL EQUIPMENT SHALL RESULT IN THE MECHANICAL EQUIPMENT BLENDING IN WITH THE PRIMARY BUILDING AND NOT APPEARING SEPARATE FROM THE BUILDING AND SHALL BE SCREENED FROM VIEW OF ANY RIGHTS-OF-WAY OR ADJOINING PROPERTIES.
4. PER CHAPTER 8, THE DUMPSTER ENCLOSURES MUST BE ONE (1) FOOT ABOVE THE HEIGHT OF THE WASTE CONTAINER. USE PROTECTIVE POLES IN CORNERS AND AT IMPACT AREAS. FENCE POSTS SHALL BE OF OF RUST PROTECTED METAL OR CONCRETE. A MINIMUM 6" SLAB IS REQUIRED AND MUST BE SLOPED TO DRAIN; THE ENCLOSURE MUST HAVE STEEL FRAMED GATES WITH SPRING LOADED HINGES AND FASTENERS TO KEEP CLOSED. SCREENING MUST BE ON ALL FOUR SIDES BY MASONRY WALL OR APPROVED FENCE OR SCREENING WITH OPAQUE GATES.
5. TRAFFIC IMPACT ANALYSIS (TIA) REQUIREMENTS HAVE BEEN MET.

AMENITY AREAS

1. CLUB HOUSE
2. FITNESS
3. POOL COURTYARD
4. GATHERING COURTYARD
5. DOG PARK

SITE DATA TABLE		
SITE AREA	14.50	AC
	631,620	SF
BUILDING COVERAGE	135,922	SF
	3.12	AC
BUILDING COVERAGE (%)	21.5%	
TOTAL GROSS FLOOR AREA	355,924	SF
	8.17	AC
FAR	0.56 : 1	
EXISTING IMPERVIOUS COVER	5,578	SF
	0.13	AC
PROPOSED IMPERVIOUS COVER (ON-SITE)	351,265	SF
	8.06	AC
IMPERVIOUS COVER (%) - (ON-SITE)	55.6%	
MAXIMUM IMPERVIOUS COVER (%) *PER PUD SECTION 6.4*	80.0%	
REQUIRED OPEN SPACE (5%)	31,581	SF
PROVIDED OPEN SPACE (SQ FT)	86,718	SF
PROVIDED OPEN SPACE (%)	13.7%	
MAX BUILDING HEIGHT (FT)	49'	FT
MAX BUILDING HEIGHT (STORIES)	3	
ZONING	PUD	
PROPOSE USE	MULTIFAMILY	

1. REFER TO BUILDING DATA TABLE FOR ADDITIONAL BUILDING HEIGHT AND BUILDING STORY INFORMATION.

BUILDING DATA TABLE						
BUILDING #	Building Type	Sprinkler Type	# OF STORIES	HEIGHT	SQ FOOTAGE	USE
1	Type V-A	13	3	40.9'	54,774	LEASING/ CLUB HOUSE/ MULTIFAMILY
2	Type V-A	13-R	3	39.9'	77,434	MULTIFAMILY
3	Type V-B	13-R	3	39.9'	40,971	MULTIFAMILY
4	Type V-B	13-R	3	39.9'	40,971	MULTIFAMILY
5	Type V-A	13-R	3	39.9'	40,971	MULTIFAMILY
6	Type V-A	13-R	3	39.9'	40,971	MULTIFAMILY
7	Type V-A	13-R	3	39.9'	77,434	MULTIFAMILY
				TOTAL GFA	373,526	

PROVIDED PARKING SUMMARY	
TOTAL STANDARD PARKING SPACES	435
TOTAL GARAGE PARKING SPACES	36
TOTAL TANDEM PARKING SPACES	36
TOTAL COMPACT PARKING SPACES	19
TOTAL ACCESSIBLE PARKING SPACES (NON-VAN)	5
TOTAL VAN ACCESSIBLE PARKING SPACES	5
TOTAL PROVIDED PARKING	536
REQUIRED PARKING	535.5

REQUIRED PARKING - MULTIFAMILY

USE	RATIO	UNITS	# OF EFFICIENCIES	# OF 1 BEDROOMS	# OF 2 BEDROOMS	# OF 3 BEDROOMS	PUD REQUIREMENT	ADDITIONAL 5% OF TOTAL SPACES FOR VISTOR USE	TOTAL REQUIRED PARKING SPACES	PARKING PROVIDED
MULTIFAMILY	1.5 SPACE PER 1 BDR UNIT, 1.5 SPACES+0.5 PER ADDITIONAL BDR FOR UNITS LARGER THAN 1 BDR + ADDITIONAL 5% OF TOTAL SPACES FOR VISTOR USE	300	0	198	84	18	510	25.5	535.5	536

ADDRESS: 500 WESTINGHOUSE ROAD

REV	DESCRIPTION	DATE	APR

DESIGNED BY: JG
REVIEWED BY: BG
DRAWN BY: JG

BGE
BROWN & GAY ENGINEERS, INC.
1701 DIRECTORS BLVD, SUITE 1000
AUSTIN, TX 78731
TBPE Registration No. F-1046
TEL: 512-879-0400 www.brownjgay.com

500 WESTINGHOUSE ROAD

ASCEND WESTINGHOUSE
GEORGETOWN, TEXAS

OVERALL SITE PLAN

STATE OF TEXAS
BRIAN J. GRACE
121846
LICENSED
PROFESSIONAL ENGINEER
9/21/2020

2020-41-SDP

G:\TXG\Projects\DHI_Communities\7616-00-Westinghouse\LD\01_CADD\01_Shts\02_Site Plan\7616-C-SP-SITE PLAN.dwg Layout: 25 OVERALL SITE PLAN Plotted: 9/21/2020 10:49:16 AM

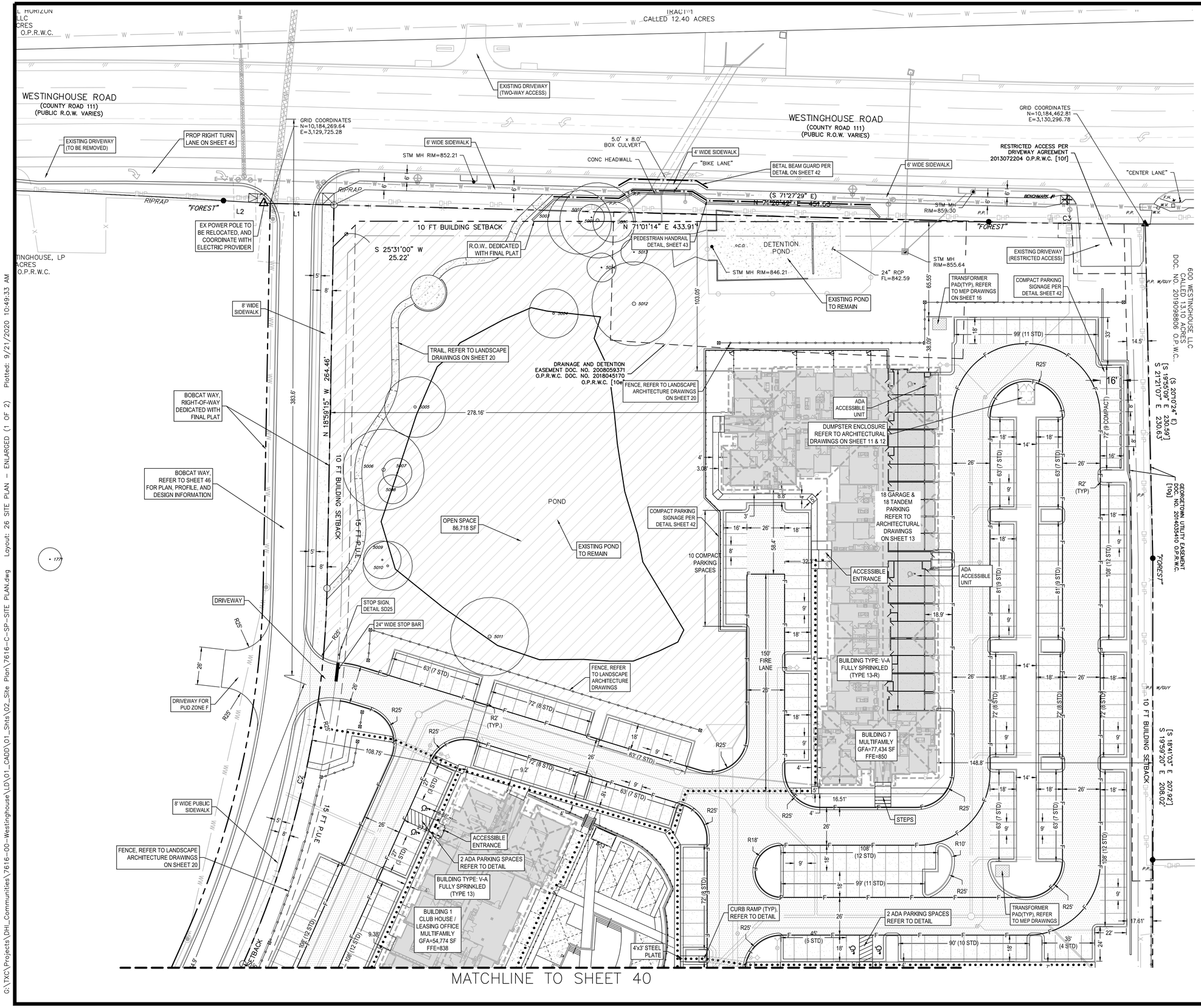

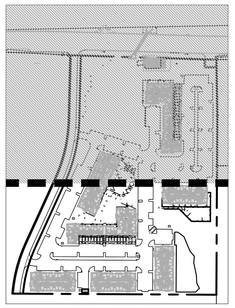

KEY MAP (N.T.S)

LEGEND

- PROPERTY BOUNDARY
- BUILDING SETBACK
- SIDEWALK
- LIGHT DUTY PAVEMENT
- MEDIUM DUTY PAVEMENT
- HEAVY DUTY PAVEMENT
- OPEN SPACE
- XXX TREE TO REMAIN
- XXX TREE TO BE REMOVED

NOTES:

1. ALL DIMENSIONS TO FACE OF CURB UNLESS OTHERWISE NOTED.
2. ALL LIGHTING FIXTURES SHALL BE DESIGNED TO COMPLETELY CONCEAL AND FULLY SHIELD, WITHIN AN OPAQUE HOUSING, THE LIGHT SOURCE FROM VISIBILITY FROM ANY STREET RIGHT-OF-WAY. THE CONE OF LIGHT SHALL NOT CROSS ANY ADJACENT PROPERTY LINE. THE ILLUMINATION SHALL NOT EXCEED 2 FOOT CANDLES AT A HEIGHT OF THREE FEET AT THE PROPERTY LINE. ONLY INCANDESCENT, FLUORESCENT, COLOR-CORRECTED HIGH-PRESSURE SODIUM OR METAL HALIDE MAY BE USED. ALL VEHICLE OR PEDESTRIAN ACCESS SHALL BE SUFFICIENTLY LIGHTED TO ENSURE SECURITY OF PROPERTY AND PERSONS.
3. ALL ROOF, WALL AND GROUND MOUNTED MECHANICAL EQUIPMENT MUST BE SCREENED IN ACCORDANCE WITH CHAPTER 8 OF THE UDC. IF ROOF AND WALL MOUNTED EQUIPMENT OF ANY TYPE INCLUDING DUCT WORK AND LARGE VENTS IS PROPOSED IT SHALL BE SHOWN ON THE SITE PLAN AND SCREENING IDENTIFIED. SCREENING OF MECHANICAL EQUIPMENT SHALL RESULT IN THE MECHANICAL EQUIPMENT BLENDING IN WITH THE PRIMARY BUILDING AND NOT APPEARING SEPARATE FROM THE BUILDING AND SHALL BE SCREENED FROM VIEW OF ANY RIGHTS-OF-WAY OR ADJOINING PROPERTIES.
4. PER CHAPTER 8, THE DUMPSTER ENCLOSURES MUST BE ONE (1) FOOT ABOVE THE HEIGHT OF THE WASTE CONTAINER. USE PROTECTIVE POLES IN CORNERS AND AT IMPACT AREAS. FENCE POSTS SHALL BE OF OF RUST PROTECTED METAL OR CONCRETE. A MINIMUM 6" SLAB IS REQUIRED AND MUST BE SLOPED TO DRAIN; THE ENCLOSURE MUST HAVE STEEL FRAMED GATES WITH SPRING LOADED HINGES AND FASTENERS TO KEEP CLOSED. SCREENING MUST BE ON ALL FOUR SIDES BY MASONRY WALL OR APPROVED FENCE OR SCREENING WITH OPAQUE GATES.
5. TRAFFIC IMPACT ANALYSIS (TIA) REQUIREMENTS HAVE BEEN MET.

N

0 15' 30' 60'

SCALE: 1" = 30'

ADDRESS: 500 WESTINGHOUSE ROAD

REV	DESCRIPTION	DATE	APR

DESIGNED BY: JG

REVIEWED BY: BG

DRAWN BY: JG

BROWN & GAY ENGINEERS, INC.
1701 DIRECTORS BLVD, SUITE 1000
AUSTIN, TX 78731
TBPE Registration No. F-1046
TEL: 512-879-0400 www.brownjay.com

ASCEND WESTINGHOUSE GEORGETOWN, TEXAS

SITE PLAN – ENLARGED (1 OF 2)

STATE OF TEXAS
BRIAN J. GRACE
121846
LICENSED PROFESSIONAL ENGINEER
9/21/2020

2020-41-SDP

500 WESTINGHOUSE ROAD

G:\TXC\Projects\DHI_Communities\7616-00-Westinghouse\LD\01_CADD\01_Shts\02_Site Plan\7616-C-SP-SITE PLAN.dwg Layout: 26 SITE PLAN – ENLARGED (1 OF 2) Plotted: 9/21/2020 10:49:33 AM

NOTES:

1. ALL DIMENSIONS TO FACE OF CURB UNLESS OTHERWISE NOTED.
2. ALL LIGHTING FIXTURES SHALL BE DESIGNED TO COMPLETELY CONCEAL AND FULLY SHIELD, WITHIN AN OPAQUE HOUSING, THE LIGHT SOURCE FROM VISIBILITY FROM ANY STREET RIGHT-OF-WAY. THE CONE OF LIGHT SHALL NOT CROSS ANY ADJACENT PROPERTY LINE. THE ILLUMINATION SHALL NOT EXCEED 2 FOOT CANDLES AT A HEIGHT OF THREE FEET AT THE PROPERTY LINE. ONLY INCANDESCENT, FLUORESCENT, COLOR-CORRECTED HIGH-PRESSURE SODIUM OR METAL HALIDE MAY BE USED. ALL VEHICLE OR PEDESTRIAN ACCESS SHALL BE SUFFICIENTLY LIGHTED TO ENSURE SECURITY OF PROPERTY AND PERSONS.
3. ALL ROOF, WALL AND GROUND MOUNTED MECHANICAL EQUIPMENT MUST BE SCREENED IN ACCORDANCE WITH CHAPTER 8 OF THE UDC. IF ROOF AND WALL MOUNTED EQUIPMENT OF ANY TYPE INCLUDING DUCT WORK AND LARGE VENTS IS PROPOSED IT SHALL BE SHOWN ON THE SITE PLAN AND SCREENING IDENTIFIED. SCREENING OF MECHANICAL EQUIPMENT SHALL RESULT IN THE MECHANICAL EQUIPMENT BLENDING IN WITH THE PRIMARY BUILDING AND NOT APPEARING SEPARATE FROM THE BUILDING AND SHALL BE SCREENED FROM VIEW OF ANY RIGHTS-OF-WAY OR ADJOINING PROPERTIES.
4. PER CHAPTER 8, THE DUMPSTER ENCLOSURES MUST BE ONE (1) FOOT ABOVE THE HEIGHT OF THE WASTE CONTAINER. USE PROTECTIVE POLES IN CORNERS AND AT IMPACT AREAS. FENCE POSTS SHALL BE OF OF RUST PROTECTED METAL OR CONCRETE. A MINIMUM 6" SLAB IS REQUIRED AND MUST BE SLOPED TO DRAIN; THE ENCLOSURE MUST HAVE STEEL FRAMED GATES WITH SPRING LOADED HINGES AND FASTENERS TO KEEP CLOSED. SCREENING MUST BE ON ALL FOUR SIDES BY MASONRY WALL OR APPROVED FENCE OR SCREENING WITH OPAQUE GATES.
5. TRAFFIC IMPACT ANALYSIS (TIA) REQUIREMENTS HAVE BEEN MET.

LEGEND

- PROPERTY BOUNDARY
- BUILDING SETBACK
- SIDEWALK
- LIGHT DUTY PAVEMENT
- MEDIUM DUTY PAVEMENT
- HEAVY DUTY PAVEMENT
- OPEN SPACE
- TREE TO REMAIN
- TREE TO BE REMOVED

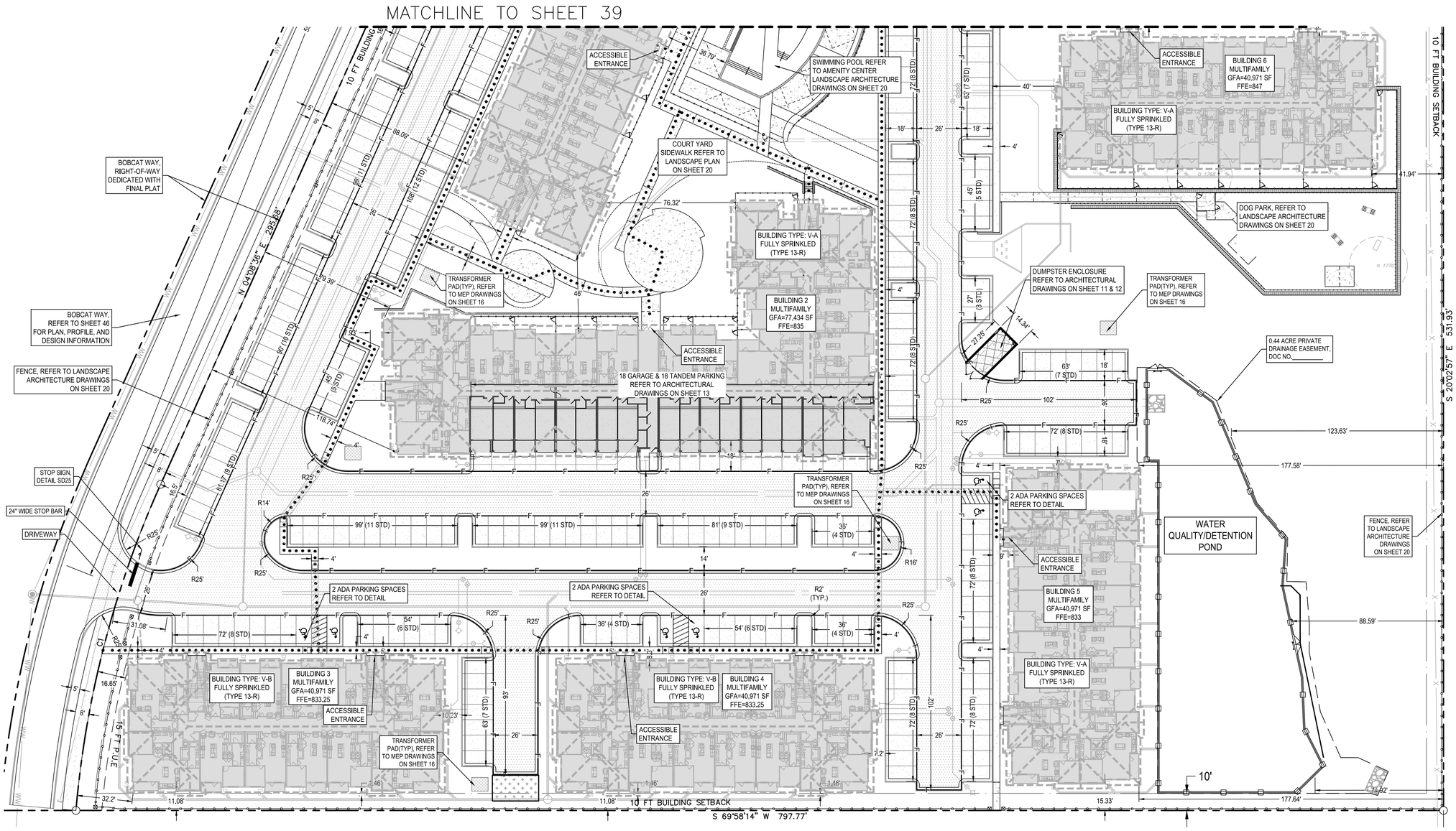

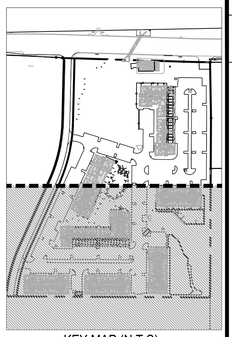

KEY MAP (N.T.S)

REV	DESCRIPTION	DATE	APR

DESIGNED BY: JG
REVIEWED BY: BG
DRAWN BY: JG

BGE
BROWN & GAY ENGINEERS, INC.
1701 DIRECTORS BLVD, SUITE 1000
AUSTIN, TX 78731
TBPE Registration No. F-1046
TEL: 512-879-0400 www.brownjay.com

500 WESTINGHOUSE ROAD

ASCEND WESTINGHOUSE
GEORGETOWN, TEXAS

SITE PLAN – ENLARGED (2 OF 2)

STATE OF TEXAS
BRIAN J. GRACE
121846
LICENSED PROFESSIONAL ENGINEER
9/21/2020

2020-41-SDP

G:\TXC\Projects\DHI_Communities\7616-00-Westinghouse\LD\01_CADD\01_Shts\02_Site Plan\7616-C-SP-SITE PLAN.dwg Layout: 27 SITE PLAN – ENLARGED (2 OF 2) Plotted: 9/21/2020 10:49:50 AM

G:\TXC\Projects\DHI_Communities\7616-00-Westinghouse\LD\01_CADD\01_Shts\02_Site Plan\7616-C-SP-DETL-SITE.dwg Layout: 28 SITE DETAILS Plotted: 9/21/2020 9:46:10 AM

SD01 – Typical Half Cross-Sections for H.M.A.C. Surfaced Streets

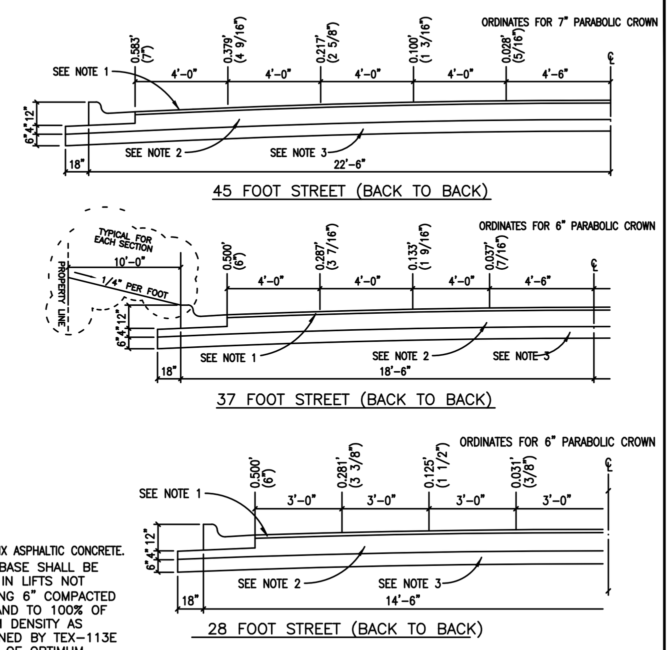

NOTES:
1. 2" HOT MIX ASPHALTIC CONCRETE.
2. 8" FLEXBASE SHALL BE PLACED IN LIFTS NOT EXCEEDING 6" COMPACTED DEPTH AND TO 100% OF MAXIMUM DENSITY AS DETERMINED BY TEX-113E AT ±3% OF OPTIMUM MOISTURE CONTENT.
3. LIME STABILIZATION MAY BE USED IF A QUALIFIED GEOTECHNICAL REPORT INDICATES THAT THE SULFATE LEVELS ARE LOW ENOUGH.

STREET AND ROADWAY DESIGN CRITERIA

STREET CLASSIFICATION	TOTAL EQUIVALENT 18K AXLE LOAD APPLICATIONS (20 YEAR FLEXIBLE DESIGN)
LOCAL	
ALLEY	20,000
RESIDENTIAL LANE	20,000
LOCAL STREET	20,000
COLLECTORS	
RESIDENTIAL	80,000
MAJOR NEIGHBOORHOOD	290,000
ARTERIALS	
MINOR ARTERIAL	1,020,000
MAJOR ARTERIAL	5,200,000

The Architect/Engineer assumes responsibility for appropriate use of this standard.

ADOPTED 6/21/2006
CITY OF GEORGETOWN CONSTRUCTION STANDARDS AND DETAILS
TYPICAL HALF CROSS – SECTIONS FOR H.M.A.C. SURFACED STREETS
SD01 — NTS — 1/2003 — MRS — TRB

SD06 – Curb and Gutter Details

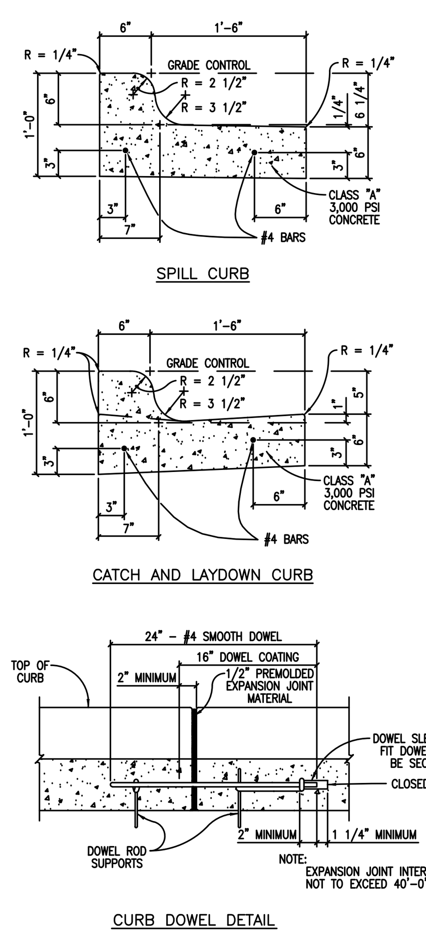

NOTES:
1. ALL WORK AND MATERIAL SHALL CONFORM TO ASTM A615, A615M, C309, AND D1752. BROOM FINISH EXPOSED SURFACE.
2. CONTRACTION JOINT SPACING 10' MAX.
3. EXPANSION JOINTS AS PER STD. ASTM D-1752.
4. 1/2" EXPANSION JOINT MATERIAL SHALL BE PROVIDED WHERE CURB IS ADJACENT TO SIDEWALK OR RIP-RAP.
5. TRANSITIONS BETWEEN CURBS OR DIFFERING CROSS SECTIONS SHALL OCCUR OVER A 20 FOOT LENGTH AS APPROVED BY THE ENGINEER OR THE CITY OF GEORGETOWN.
6. ALL CONCRETE SHALL BE CLASS A, 3000 PSI.
7. ALL SURFACES THAT ARE CHIPPED OR OTHERWISE DAMAGED DURING CONSTRUCTION SHALL BE REPAIRED.
8. THE FOLLOWING SCHEME OF REINFORCEMENT SHALL BE REQUIRED. THE MANNER OF PLACEMENT AND LOCATION SHALL BE TO THE SATISFACTION OF THE ENGINEER OR THE CITY OF GEORGETOWN.
   A. ALL CURB AND CURB AND GUTTER (REINFORCED) SHALL HAVE TWO #4 LONGITUDINAL REINFORCING BARS.
9. REINFORCING BARS SHALL BE LAPPED A MINIMUM OF 15 INCH.
10. REINFORCING BARS SHALL BE SUPPORTED WITH REBAR CHAIRS OR OTHER APPROVED METHODS.
11. REBAR SUPPORTS ARE NOT REQUIRED ON MACHINE PLACED CURB PROVIDED THAT REBAR IS PROPERLY GUIDED INTO THE CURB SECTION.

The Architect/Engineer assumes responsibility for appropriate use of this standard.

ADOPTED 6/21/2006
CITY OF GEORGETOWN CONSTRUCTION STANDARDS AND DETAILS
CURB AND GUTTER DETAILS
SD06 — NTS — MRS — TRB

SD07 – Mountable Curb and Gutter Details

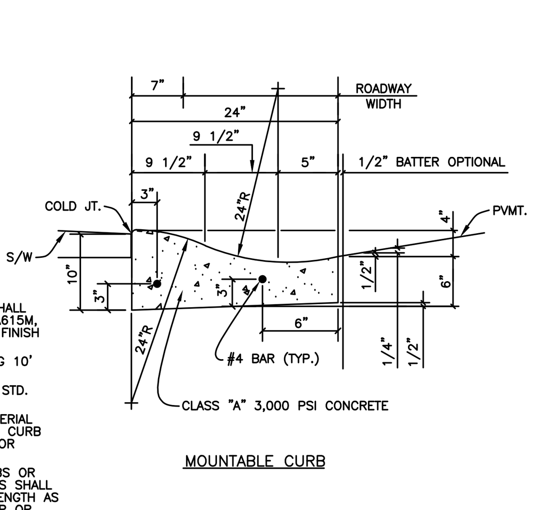

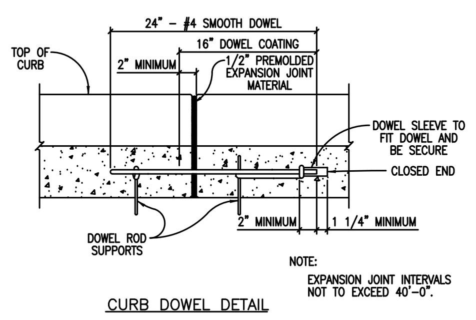

NOTES:
1. ALL WORK AND MATERIAL SHALL CONFORM TO ASTM A615, A615M, C309, AND D1752. BROOM FINISH EXPOSED SURFACE.
2. CONTRACTION JOINT SPACING 10' MAX.
3. EXPANSION JOINTS AS PER STD. ASTM D-1752.
4. 1/2" EXPANSION JOINT MATERIAL SHALL BE PROVIDED WHERE CURB IS ADJACENT TO SIDEWALK OR RIP-RAP.
5. TRANSITIONS BETWEEN CURBS OR DIFFERING CROSS SECTIONS SHALL OCCUR OVER A 20 FOOT LENGTH AS APPROVED BY THE ENGINEER OR TH CITY OF GEORGETOWN.
6. ALL CONCRETE SHALL BE CLASS A, 3000 PSI.
7. ALL SURFACES THAT ARE CHIPPED OR OTHERWISE DAMAGED DURING CONSTRUCTION SHALL BE REPAIRED.
8. ONE OF THE FOLLOWING SCHEMES OF REINFORCEMENT SHALL BE REQUIRED. THE MANNER OF PLACEMENT AND LOCATION SHALL BE TO THE SATISFACTION OF THE ENGINEER OR THE CITY OF GEORGETOWN.
   A. CURB AND GUTTER (REINFORCED) SHALL HAVE LONGITUDINAL REINFORCING BARS AS FOLLOWS: THREE #4,
   B. ALL TYPES OF CURB (REINFORCED) SHALL HAVE #4 BAR FOR LONGITUDINAL REINFORCEMENT.
9. REINFORCING BARS SHALL BE LAPPED A MINIMUM OF 15 INCH.
10. REINFORCING BARS SHALL BE SUPPORTED WITH REBAR CHAIRS OR OTHER APPROVED METHODS.
11. REBAR SUPPORTS ARE NOT REQUIRED ON MACHINE PLACED CURB PROVIDED THAT REBAR IS PROPERLY GUIDED INTO THE CURB SECTION.

The Architect/Engineer assumes responsibility for appropriate use of this standard.

ADOPTED 6/21/2006
CITY OF GEORGETOWN CONSTRUCTION STANDARDS AND DETAILS
MOUNTABLE CURB AND GUTTER DETAILS
SD07 — NTS — 1/2003 — MRS — TRB

SD14 – Sidewalk Section and Joint Detail

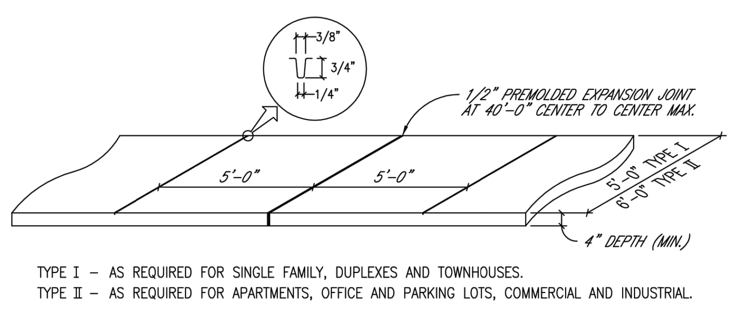

TYPE I – AS REQUIRED FOR SINGLE FAMILY, DUPLEXES AND TOWNHOUSES.
TYPE II – AS REQUIRED FOR APARTMENTS, OFFICE AND PARKING LOTS, COMMERCIAL AND INDUSTRIAL.

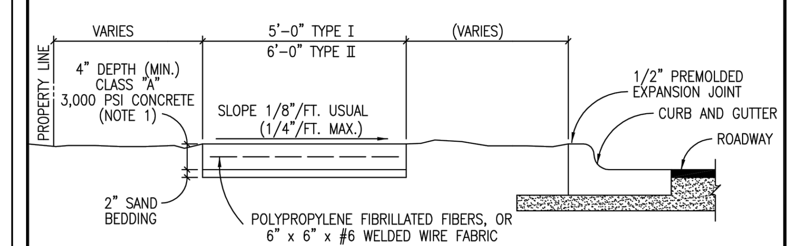

NOTES:
1. STANDARD LOCATION OF SIDEWALK IS OFF BACK OF CURB. SPECIAL DESIGNS MAY BE APPROVED BY THE CITY ENGINEER, PRIOR TO FINAL DESIGN AS APPROVED BY ENGINEER DURING PLAN REVIEW AN IN CONFORMANCE WITH CURRENT AASHTO STANDARDS.
2. SIDEWALK SHALL CONFORM TO CURRENT AMERICANS WITH DISABILITIES ACT STANDARDS.
3. ALL SIDEWALKS SHALL BE SUBMITTED AND APPROVED BY THE REGISTERED ACCESSIBILITY SPECIALIST (RAS) AND ENGINEER OF RECORD.
4. ANY VARIANCE IN TEXTURE, GRADE OR ALIGNMENT SHALL BE APPROVED BY THE REGISTERED ACCESSIBILITY SPECIALIST (RAS) AND ENGINEER OF RECORD.
5. SLIP DOWEL SHALL BE INSTALLED AT EVERY LONGITUDINAL EXPANSION JOINT (UNLESS OTHERWISE APPROVED BY THE CITY ENGINEER DURING ENGINEERING PLAN REVIEW PRIOR TO FINAL DESIGN).

The Architect/Engineer assumes responsibility for appropriate use of this standard.

REVISED 6/25/2015 WBD
ADOPTED 6/21/2006 TRB
CITY OF GEORGETOWN CONSTRUCTION STANDARDS AND DETAILS
SIDEWALK SECTION AND JOINT DETAIL
SD14 — NTS — 1/2003 — MRS — TRB

SD15 – Concrete Driveway Approach Typical

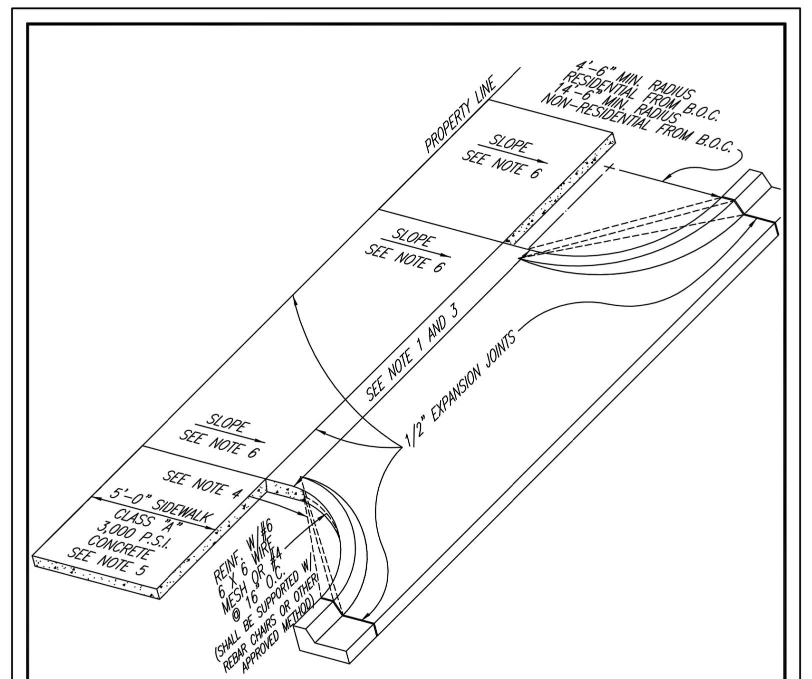

NOTES:
1. MAXIMUM WIDTH OF APPROACH SHALL BE 24'-0" FOR RESIDENTIAL, 30'-0" FOR NON-RESIDENTIAL UNDIVIDED AND 45'-0" FOR NON-RESIDENTIAL DIVIDED.
2. DRIVEWAY PERMITS SHALL BE ACQUIRED FROM CITY INSPECTION OFFICE.
3. MINIMUM WIDTH OF APPROACH SHALL BE 10'-0" FOR RESIDENTIAL AND 15'-0" FOR NON-RESIDENTIAL.
4. LINEAR "RADIUS" AT CORNERS, PERMITTED FOR "SINGLE FAMILY" OR "TWO FAMILY" RESIDENTIAL DRIVEWAY APPROACH.
5. SIDEWALK LOCATION SHALL BE APPROVED BY CITY ENGINEER PRIOR TO FINAL DESIGN.
6. SLOPE 1/8" PER FOOT USUAL, SHALL NOT EXCEED 2.0%.
7. DRIVEWAY APPROACH THICKNESS SHALL BE A MIN. OF 6".

The Architect/Engineer assumes responsibility for appropriate use of this standard.

REVISED 6/25/2015 WBD
ADOPTED 6/21/2006 TRB
CITY OF GEORGETOWN CONSTRUCTION STANDARDS AND DETAILS
CONCRETE DRIVEWAY APPROACH TYPICAL
SD15 — NTS — 1/2003 — MRS — TRB

SD25 – Standard Street Sign Detail

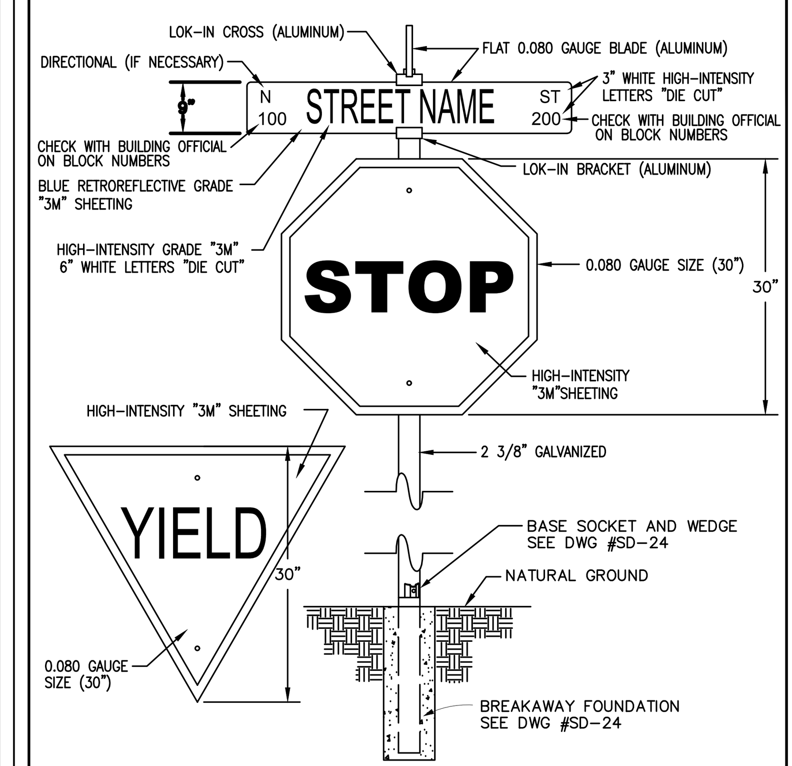

NOTES:
1. 7-FOOT MIN. HEIGHT FROM GROUND TO BOTTOM OF SIGN.
2. ALL SIGNS TO BE IN CONFORMANCE WITH THE CURRENT EDITION OF THE TEXAS MANUAL OF UNIFORM TRAFFIC CONTROL DEVICES (TMUTCD).
3. ALL SIGNAGE SHEETINGS SHALL BE HIGH-INTENSITY "3M" SHEETING.

The Architect/Engineer assumes responsibility for appropriate use of this standard.

REVISED 1/14/2014 WBD
ADOPTED 6/21/2006 TRB
CITY OF GEORGETOWN CONSTRUCTION STANDARDS AND DETAILS
STANDARD STREET SIGN DETAIL
SD25 — NTS — 1/2003 — MRS/AP — TRB

SD27 – Standard Street Sign Detail II

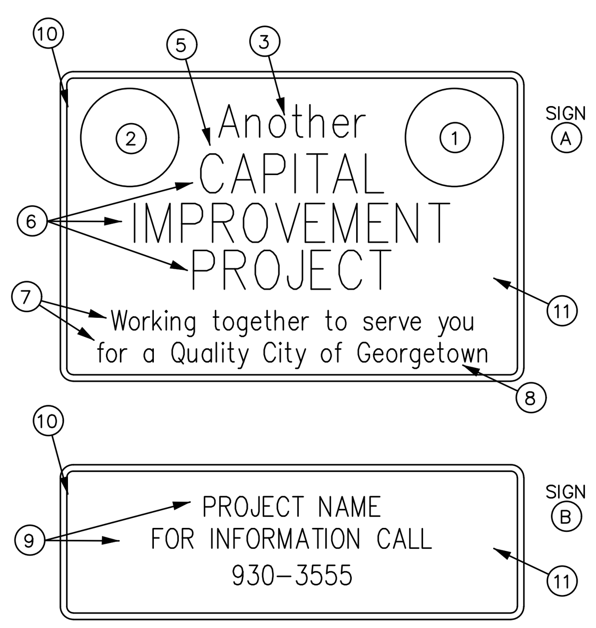

NOTES:
1. CITY SEAL (FURNISHED BY THE CITY)
2. G.U.S. LOGO (FURNISHED BY THE CITY)
3. (1 3/4") BLUE LETTERS
4. (2 1/2") BLUE LETTERS
5. (1 1/4") SPACE
6. (3") BLUE LETTERS
7. (2") RED UPPER, (1 1/2") RED LOWER CASE LETTERS
8. (2") BLUE UPPER, (1 1/2") BLUE LOWER CASE LETTERS (City of Georgetown)
9. (10") LETTERS
10. (1 3/8") BLUE BORDER
11. REFLECTIVE SILVER SHEETING .080 ALUMINUM 2290, TRANSPARENT RED PAINT 712, BLUE PAINT 710, 3M CO. OR APPROVED EQUIVALENT.
12. REFER TO SHEET SD-26A

The Architect/Engineer assumes responsibility for appropriate use of this standard.

ADOPTED 6/21/2006
CITY OF GEORGETOWN CONSTRUCTION STANDARDS AND DETAILS
STANDARD STREET SIGN DETAIL II
SD27 — NTS — 1/2003 — MRS — TRB

SD28 – Pedestrian Ramps General Notes

The Architect/Engineer assumes responsibility for appropriate use of this standard.

NOTES:
1. COMMERCIAL SIDEWALKS WIDTHS – 6'
   RESIDENTIAL SIDEWALKS WIDTHS – 5'
2. ALL SLOPES ARE MAXIMUM ALLOWABLE. FLATTER SLOPES THAT WILL STILL DRAIN PROPERLY ARE ENCOURAGED.
3. ALL CONCRETE SURFACES SHALL RECEIVE A LIGHT BROOM FINISH UNLESS NOTED OTHERWISE IN THE PLANS.
4. FOR PURPOSES OF WARNING, THE CURB RAMPS SHALL HAVE A LIGHT REFLECTIVE VALUE AND TEXTURE THAT SIGNIFICANTLY CONTRASTS WITH THAT OF ADJOINING PEDESTRIAN ROUTES.
5. TEXTURES MAY CONSIST OF PAVERS WITH TRUNCATED DOMED SURFACES. TEXTURES ARE REQUIRED TO BE DETECTABLE UNDERFOOT. SURFACES THAT WOULD ALLOW WATER TO ACCUMULATE ARE PROHIBITED.
6. COLOR CONTRAST, FOR EXAMPLE, MAY BE ACCOMPLISHED WITH COLORED CONCRETE PAVERS THAT HAVE TRUNCATED DOMES WHICH WOULD PROVIDE A CONTRAST WITH TYPICALLY LIGHT COLORED CONCRETE.
7. ADDITIONAL INFORMATION ON CURB RAMP LOCATION, DESIGN, VISIBILITY AND TEXTURE MAY BE FOUND IN THE CURRENT EDITION OF THE TEXAS ACCESSIBILITY STANDARDS (TAS) PREPARED AND ADMINISTERED BY THE TEXAS DEPARTMENT OF LICENSING AND REGULATION (TDLR).
8. RAISED MEDIANS SEPARATE OPPOSING DIRECTIONS OF TRAFFIC AND PROVIDE A REFUGE AREA FOR PEDESTRIANS IF THEY ARE UNABLE TO CROSS THE ENTIRE ROADWAY IN THE ALLOTTED SIGNAL PHASE. MEDIAN CROSSING SHALL BE A MINIMUM OF 5' WIDE. MEDIANS SHIOULD BE DESIGNED TO PROVIDE ACCESSIBLE PASSAGE OVER OR TROUGH THEM.
9. ALL SIDEWALK PLANS AND DETAILS SHALL BE SUBMITTED AND APPROVED BY "REGISTERED ACCESSIBILITY SPECIALIST" (RAS).
10. ANY PART OF THE ACCESSIBLE ROUTE WITH A SLOPE GRATER THAN 1:20 (5%) SHALL BE CONSIDERED A RAMP. IF A RAMP HAS A RISE GREATER THAN 6 INCHES OR A HORIZONTAL PROJECTION GREATER THAN 72 INCHES, THEN IT SHALL MEET THE REQUIREMENTS OF A RAMP PER TAS 405.THE ONLY EXCEPTION IS AT CURB RAMPS. HANDRAILS ARE NOT REQUIRED ON CURB RAMPS. CURB RAMPS SHALL BE PROVIDED WHERE EVER AN ACCESSIBLE ROUTE CROSSES (PENETRATES) A CURB.
11. TRAFFIC SIGNAL OR ILLUMINATION POLES, GROUND BOXES, CONTROLLER BOXES, SIGNS, DRAINAGE FACILITIES AND OTHER ITEMS SHALL BE PLACED SO NOT TO OBSTRUCT THE ACCESSIBLE ROUTE OR ACT PROTRUDING OBJECTS.
12. ALL SIDEWALKS SHALL BE DOWELED INTO EXISTING SIDEWALKS, DRIVEWALKS, DRIVEWAYS, INLET BOXES, RETAINING WALLS, ETC.
13. ALL SIDEWALK CROSS-SLOPES SHALL NOT EXCEED 1:50, UNLESS A VARIANCE IS PROVIDED BY TDLR.

(PENETRATES) A CURB.

REVISED 6/25/2015 WBD
ADOPTED 6/21/2006 TRB
CITY OF GEORGETOWN CONSTRUCTION STANDARDS AND DETAILS
PEDESTRIAN RAMPS GENERAL NOTES
SD28 — NTS — 1/2003 — MRS — TRB

SD29 – Typical Intersecton Layout

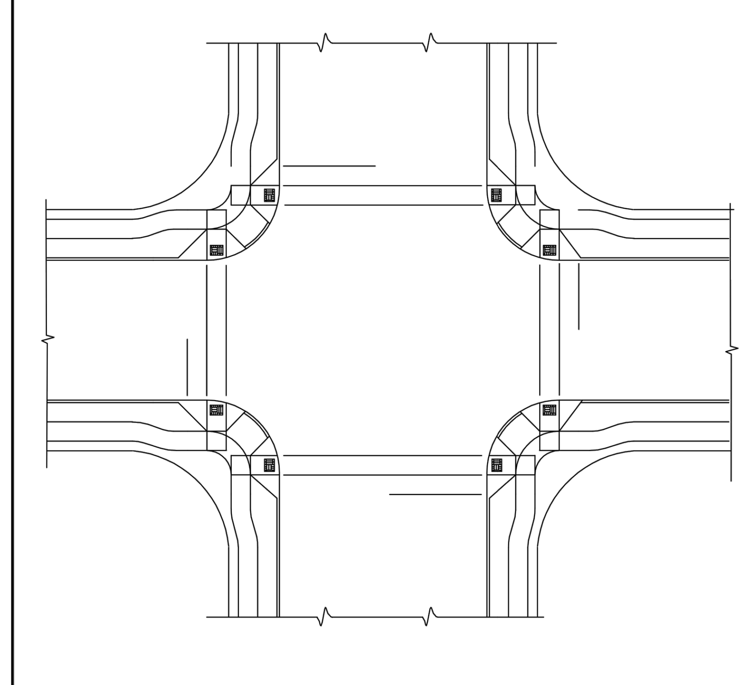

NOTE: ALL RAMPS SHALL BE CONTAINED WITHIN THE RESPECTIVE CURB RETURN RADIUS.

The Architect/Engineer assumes responsibility for appropriate use of this standard.

REVISED 6/29/2015 WBD
ADOPTED 6/21/2006 TRB
CITY OF GEORGETOWN CONSTRUCTION STANDARDS AND DETAILS
TYPICAL INTERSECTON LAYOUT
SD29 — NTS — 1/2003 — MRS — TRB

SD30 – Curb Ramp Placements at Intersections

The Architect/Engineer assumes responsibility for appropriate use of this standard.

CURB RAMP

FOR ON-SYSTEM PROJECTS SUCH AS RESTORATION, SEAL COAT AND OVERLAY PROJECTS, PLACEMENT OF CURB RAMPS SHALL BE EVALUATED IN THE FOLLOWING ORDER OF PREFERENCE: PERPENDICULAR, PARALLEL OR COMBINATION. THE MOST PREFERABLE OPTION THAT IS FEASIBLE AT EACH CORNER SHALL BE PROVIDED.

ALL RAMPS SHALL BE CONTAINED WITHIN THE RESPECTIVE CURB RETURN RADIUS.

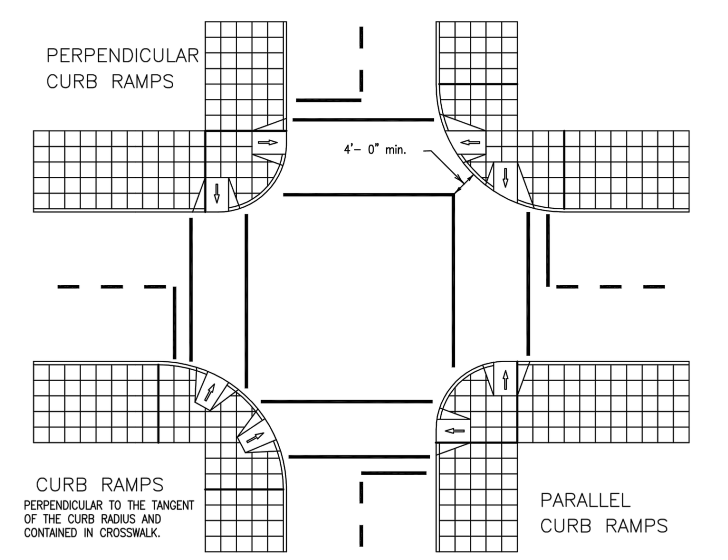

REVISED 6/26/2015 WBD
ADOPTED 6/21/2006 TRB
CITY OF GEORGETOWN CONSTRUCTION STANDARDS AND DETAILS
CURB RAMP PLACEMENTS AT INTERSECTIONS
SD30 — NTS — 1/2003 — MRS — TRB

SD31 – Sidewalk Ramp Details Type 1-3

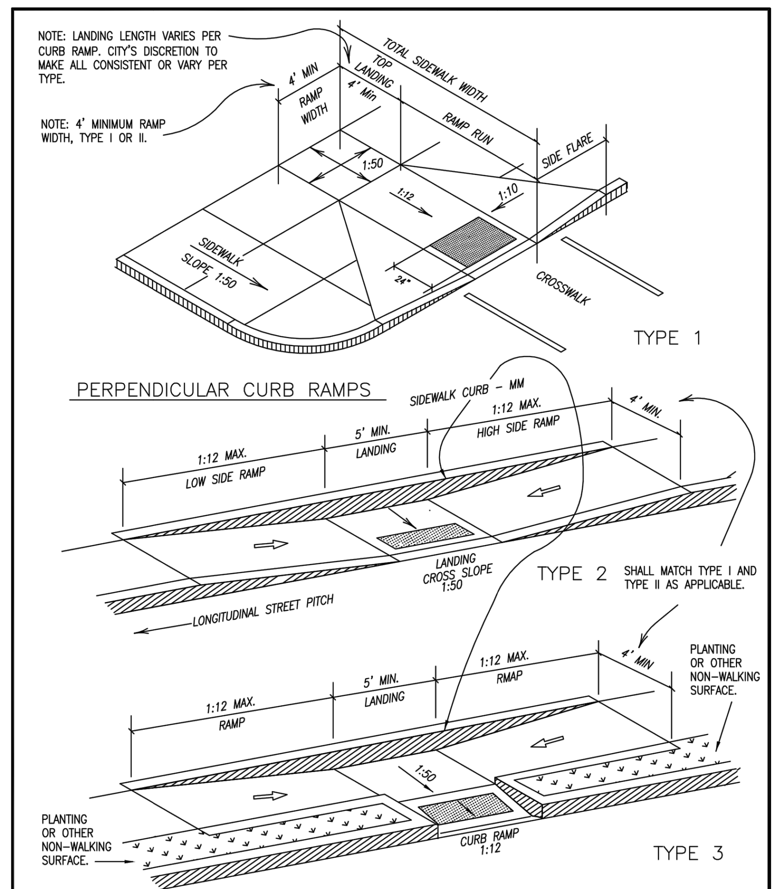

The Architect/Engineer assumes responsibility for appropriate use of this standard.

PARALLEL CURB RAMPS

REVISED 6/30/2015 WBD
ADOPTED 6/21/2006 TRB
CITY OF GEORGETOWN CONSTRUCTION STANDARDS AND DETAILS
SIDEWALK RAMP DETAILS TYPE 1-3
SD31 — NTS — 1/2003 — MRS — TRB

SD33 – Sidewalk Ramp Detail Types 4 & 5

The Architect/Engineer assumes responsibility for appropriate use of this standard.

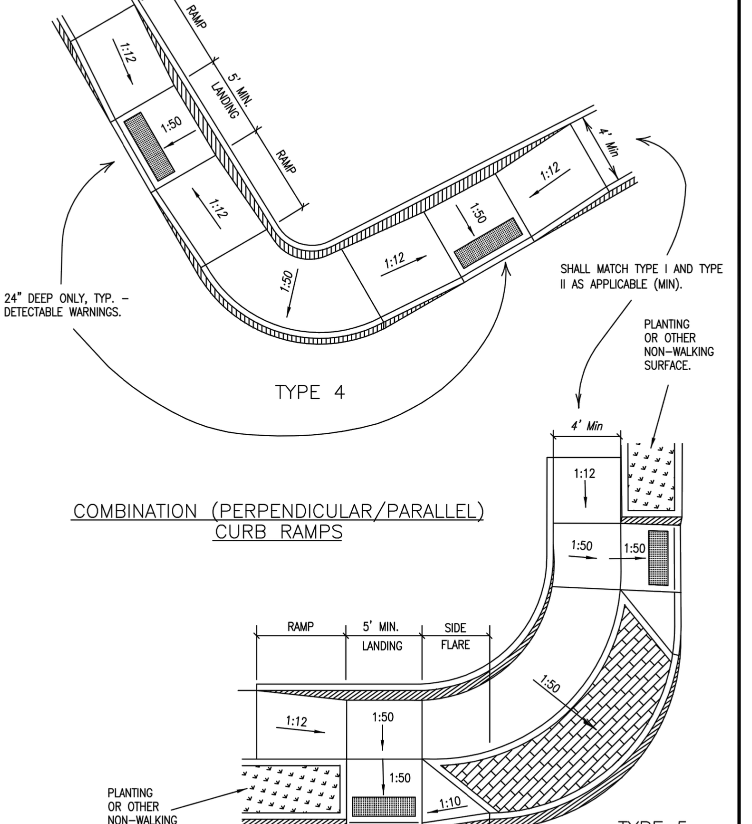

REVISED 7/6/2015 WBD
ADOPTED 6/21/2006 TRB
CITY OF GEORGETOWN CONSTRUCTION STANDARDS AND DETAILS
SIDEWALK RAMP DETAIL TYPES 4 & 5
SD33 — NTS — 1/2003 — MRS — TRB

SD34 – Driveway Apron Type 10

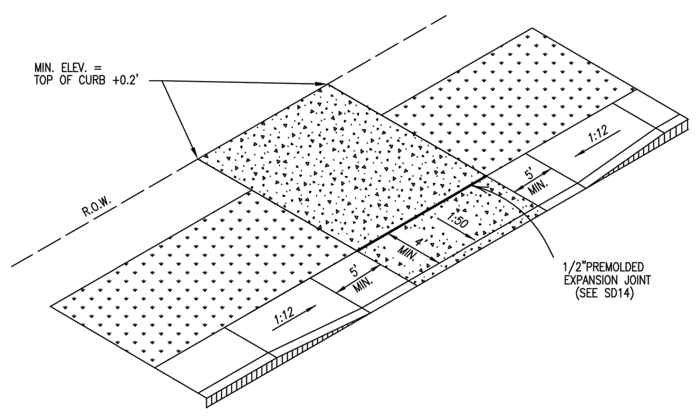

RAMP SIDEWALK AT DRIVEWAY
TYPE 10

The Architect/Engineer assumes responsibility for appropriate use of this standard.

REVISED 7/6/2015 WBD
ADOPTED 6/21/2006 TRB
CITY OF GEORGETOWN CONSTRUCTION STANDARDS AND DETAILS
DRIVEWAY APRON TYPE 10
SD34 — NTS — 1/2003 — MRS — TRB

SD35 – Driveway Aprons Types 12 & 13

The Architect/Engineer assumes responsibility for appropriate use of this standard.

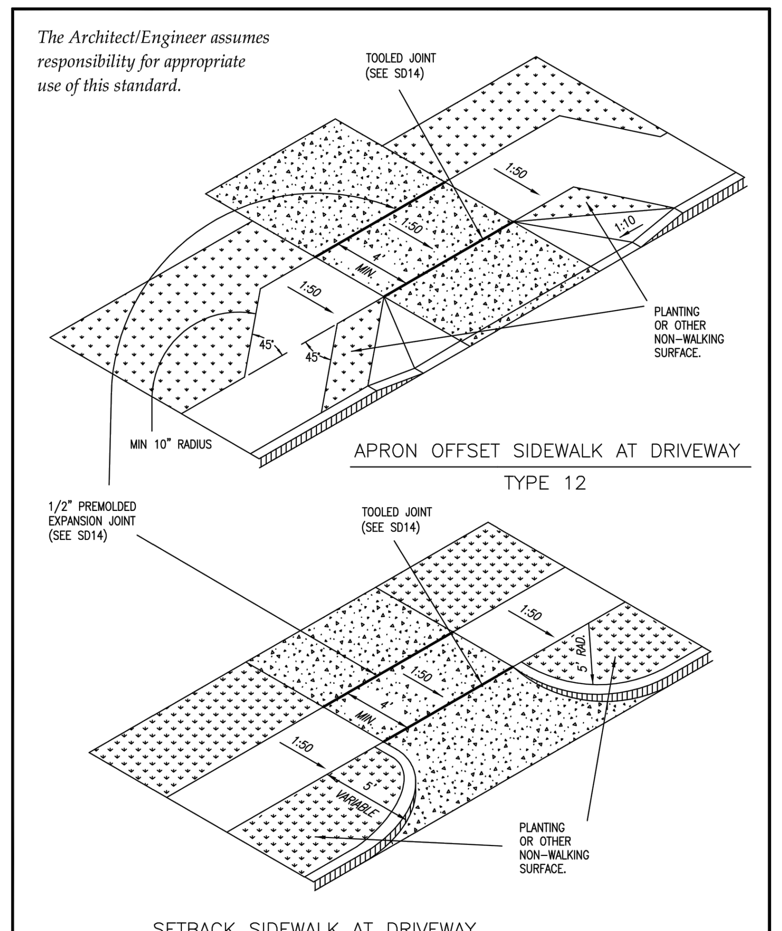

REVISED 7/7/2015 WBD
ADOPTED 6/21/2006 TRB
CITY OF GEORGETOWN CONSTRUCTION STANDARDS AND DETAILS
DRIVEWAY APRONS TYPES 12 & 13
SD35 — NTS — 1/2003 — MRS — TRB

SD36 – Curb Ramps at Median Islands

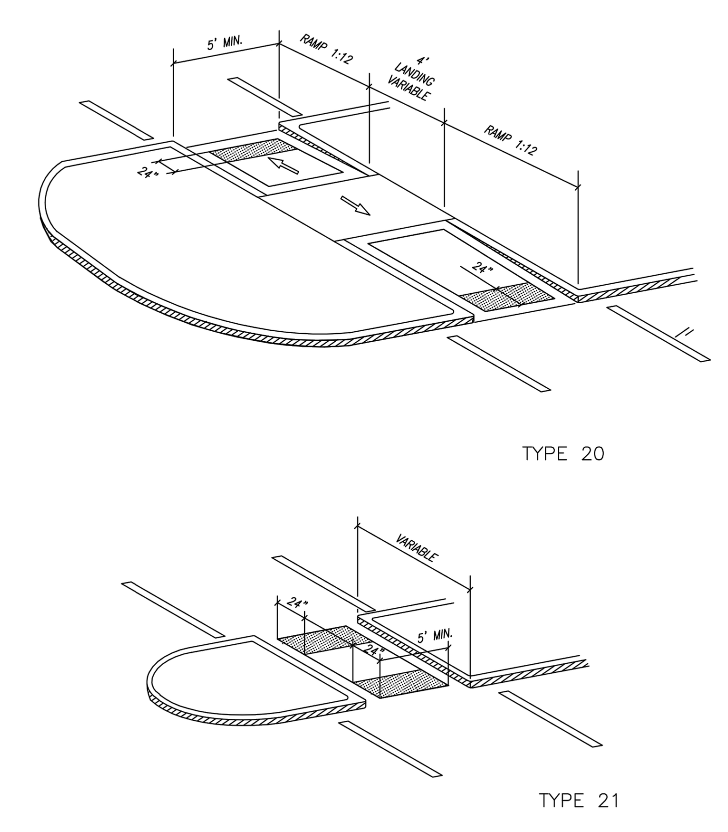

The Architect/Engineer assumes responsibility for appropriate use of this standard.

REVISED 7/7/2015 WBD
ADOPTED 6/21/2006
CITY OF GEORGETOWN CONSTRUCTION STANDARDS AND DETAILS
CURB RAMPS AT MEDIAN ISLANDS
SD36 — NTS — 1/2003 — MRS — TRB

SD37 – Curb Ramp Textures Type A

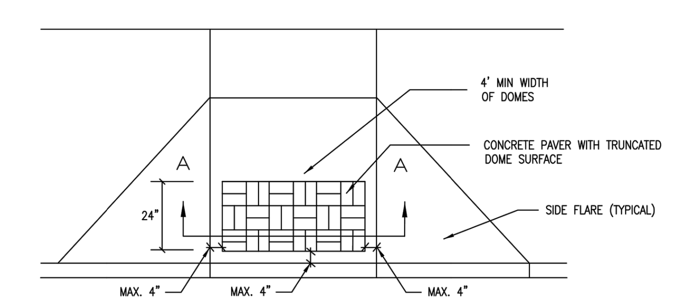

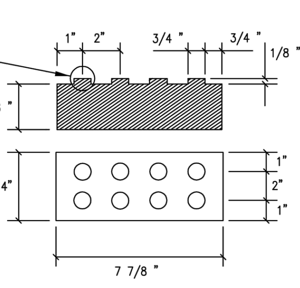

GENERAL NOTES

CONCRETE PAVER UNITS SHALL MEET ALL REQUIREMENTS OF ASTM C-936, C-33, AND SHALL BE LAID IN A TWO BY TWO UNIT BASKET WEAVE PATTERN, UNLESS SHOWN OTHERWISE IN THE PLANS.

CONCRETE PAVER UNIT SHALL HAVE A TRUNCATED DOME TOP SURFACE FOR DETECTABLE WARNING TO PEDESTRIANS.

CONCRETE PAVER UNIT COLOR FOR THE RAMP SHALL BE A CONTRASTING COLOR TO THE ADJACENT SURFACES. THE COLOR OF THE CONCRETE PAVER UNITS SHALL BE SHOWN ELSEWHERE IN THE PLANS. (ADJACENT SURFACES INCLUDE SIDE FLARES).

CONCRETE PAVER UNITS SHALL BE SAW CUT ONLY AND ANY CUT UNIT SHALL BE NOT LESS THAN 25 PERCENT OF A FULL UNIT.

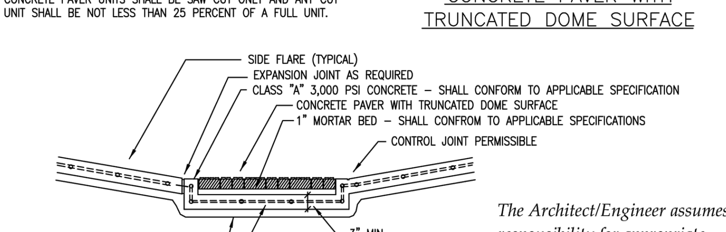

SECTION A–A

The Architect/Engineer assumes responsibility for appropriate use of this standard.

REVISED 7/7/2015 WBD
REVISED 3/14/2014 WBD
ADOPTED 6/21/2006 TRB
CITY OF GEORGETOWN CONSTRUCTION STANDARDS AND DETAILS
CURB RAMP TEXTURES TYPE A
SD37 — NTS — 1/2003 — MRS/AP — TRB

THE LOCATION OF EXISTING UNDERGROUND UTILITIES ARE SHOWN IN AN APPROXIMATE WAY ONLY. THE CONTRACTOR SHALL DETERMINE THE EXACT LOCATION OF ALL EXISTING UTILITIES BEFORE COMMENCING WORK. HE AGREES TO BE FULLY RESPONSIBLE FOR ANY AND ALL DAMAGES WHICH MIGHT BE OCCASIONED BY HIS FAILURE TO EXACTLY LOCATE ADN PRESERVE ANY AND ALL UNDERGROUND UTILITIES.

811 Know what's below. Call before you dig.

ADDRESS: 500 WESTINGHOUSE ROAD

REV	DESCRIPTION	DATE	APR

DESIGNED BY: JG
REVIEWED BY: BG
DRAWN BY: JG

BGE
BROWN & GAY ENGINEERS, INC.
1701 DIRECTORS BLVD., SUITE 1000
AUSTIN, TX 78731
TBPE Registration No. F-1046
TEL: 512-879-0400 www.browngay.com

500 WESTINGHOUSE ROAD

ASCEND WESTINGHOUSE
GEORGETOWN, TEXAS

SITE DETAILS (1 OF 2)

STATE OF TEXAS — BRIAN J. GRACE — 121846 — LICENSED PROFESSIONAL ENGINEER — 9/29/2020

2020-41-SDP

SHEET 41 OF 76

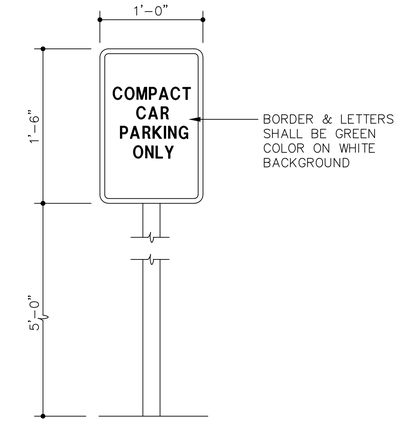

1 COMPACT PARKING SIGNAGE

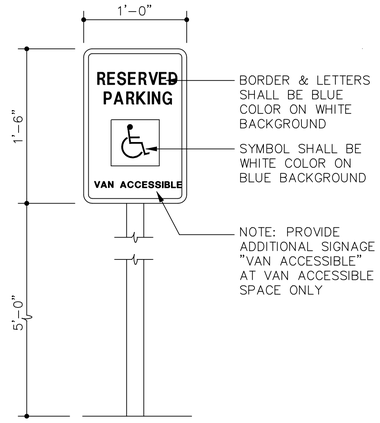

2 SIGNAGE

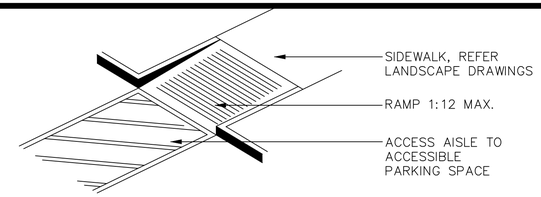

3 TYPICAL ACCESSIBLE CROSSWALK

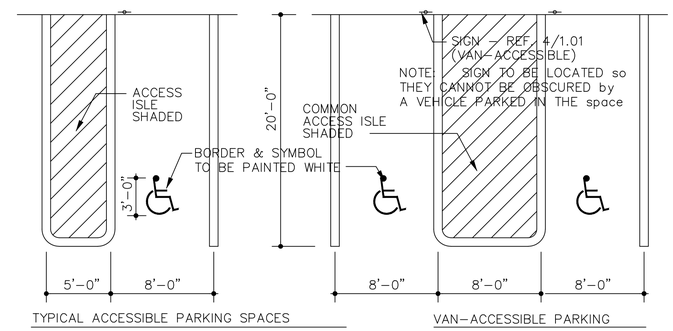

NOTE: PARKING SPACE & ACCESS ISLE SHALL BE LEVEL WITH SURFACE SLOPES NOT EXCEEDING 2% IN ALL DIRECTIONS

4 ACCESSIBLE PARKING

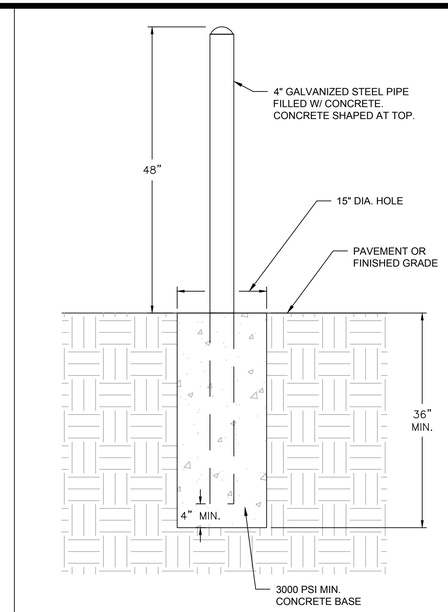

SITE BOLLARD DETAIL

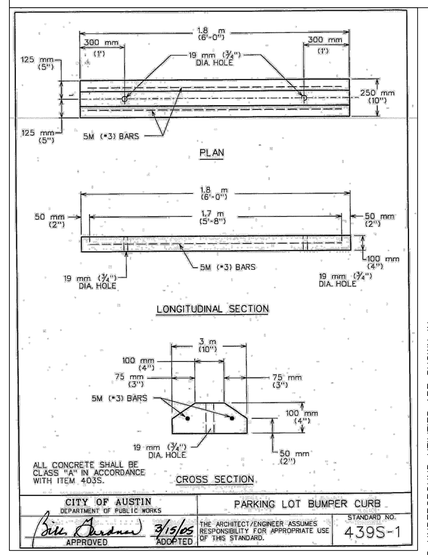

PAVEMENT SECTION
NO SCALE

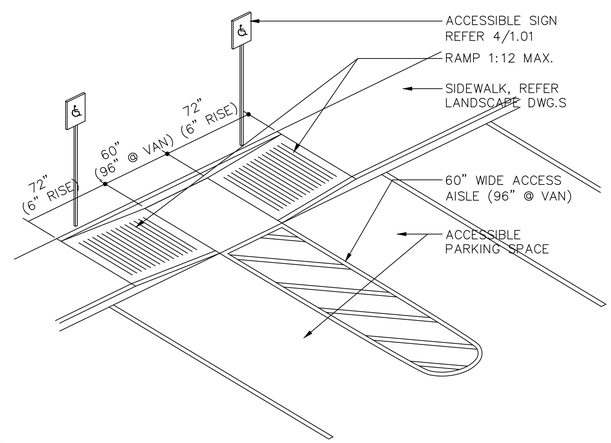

5 TYPICAL ACCESSIBLE RAMP

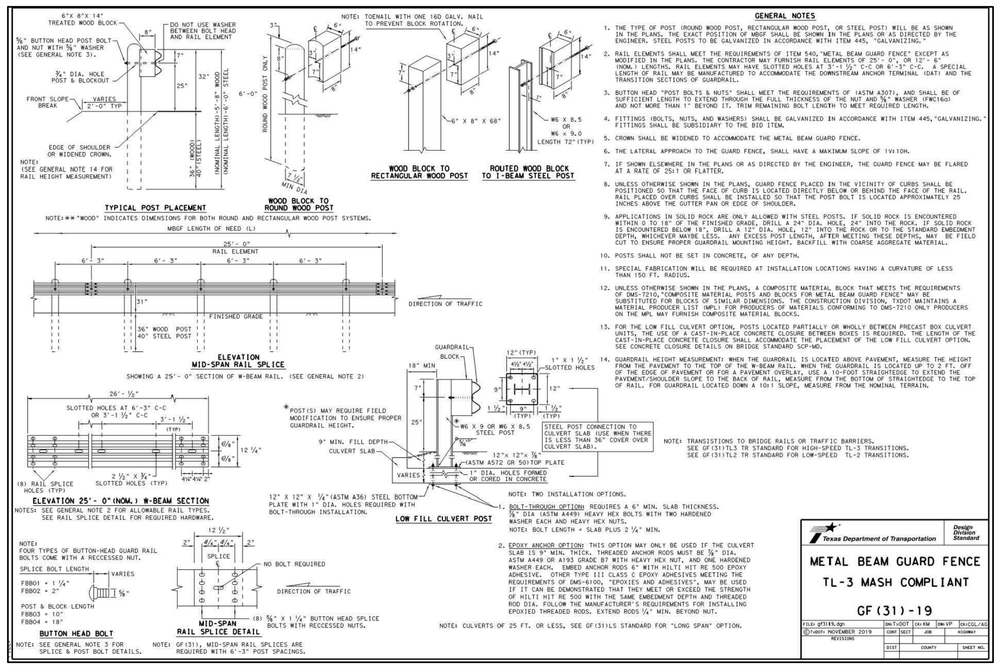

GENERAL NOTES

1. THE TYPE OF POST (ROUND WOOD POST, RECTANGULAR WOOD POST, OR STEEL POST) WILL BE AS SHOWN IN THE PLANS. THE EXACT POSITION OF MBGF SHALL BE SHOWN IN THE PLANS OR AS DIRECTED BY THE ENGINEER. STEEL POSTS TO BE GALVANIZED IN ACCORDANCE WITH ITEM 445, "GALVANIZING."
2. RAIL ELEMENTS SHALL MEET THE REQUIREMENTS OF ITEM 540, "METAL BEAM GUARD FENCE" EXCEPT AS MODIFIED IN THE PLANS. THE CONTRACTOR MAY FURNISH RAIL ELEMENTS OF 25'- 0", OR 12'- 6" (NOM.) LENGTHS. RAIL ELEMENTS MAY HAVE SLOTTED HOLES AT 3'-1 1/2" C-C OR 6'-3" C-C. A SPECIAL LENGTH OF RAIL MAY BE MANUFACTURED TO ACCOMMODATE THE DOWNSTREAM ANCHOR TERMINAL (DAT) AND THE TRANSITION SECTIONS OF GUARDRAIL.
3. BUTTON HEAD "POST BOLTS & NUTS" SHALL MEET THE REQUIREMENTS OF (ASTM A307), AND SHALL BE OF SUFFICIENT LENGTH TO EXTEND THROUGH THE FULL THICKNESS OF THE NUT AND 5/8" WASHER (FWC16G) AND NOT MORE THAN 1" BEYOND IT. TRIM REMAINING BOLT LENGTH TO MEET REQUIRED LENGTH.
4. FITTINGS (BOLTS, NUTS, AND WASHERS) SHALL BE GALVANIZED IN ACCORDANCE WITH ITEM 445, "GALVANIZING." FITTINGS SHALL BE SUBSIDIARY TO THE BID ITEM.
5. CROWN SHALL BE WIDENED TO ACCOMMODATE THE METAL BEAM GUARD FENCE.
6. THE LATERAL APPROACH TO THE GUARD FENCE, SHALL HAVE A MAXIMUM SLOPE OF 1V:10H.
7. IF SHOWN ELSEWHERE IN THE PLANS OR AS DIRECTED BY THE ENGINEER, THE GUARD FENCE MAY BE FLARED AT A RATE OF 25:1 OR FLATTER.
8. UNLESS OTHERWISE SHOWN IN THE PLANS, GUARD FENCE PLACED IN THE VICINITY OF CURBS SHALL BE POSITIONED SO THAT THE FACE OF CURB IS LOCATED DIRECTLY BELOW OR BEHIND THE FACE OF THE RAIL. RAIL PLACED OVER CURBS SHALL BE INSTALLED SO THAT THE POST BOLT IS LOCATED APPROXIMATELY 25 INCHES ABOVE THE GUTTER PAN OR EDGE OF SHOULDER.
9. APPLICATIONS IN SOLID ROCK ARE ONLY ALLOWED WITH STEEL POSTS. IF SOLID ROCK IS ENCOUNTERED WITHIN 0 TO 18" OF THE FINISHED GRADE, DRILL A 24" DIA. HOLE, 24" INTO THE ROCK. IF SOLID ROCK IS ENCOUNTERED BELOW 18", DRILL A 12" DIA. HOLE, 12" INTO THE ROCK OR TO THE STANDARD EMBEDMENT DEPTH, WHICHEVER MAYBE LESS. ANY EXCESS POST LENGTH, AFTER MEETING THESE DEPTHS, MAY BE FIELD CUT TO ENSURE PROPER GUARDRAIL MOUNTING HEIGHT. BACKFILL WITH COARSE AGGREGATE MATERIAL.
10. POSTS SHALL NOT BE SET IN CONCRETE, OF ANY DEPTH.
11. SPECIAL FABRICATION WILL BE REQUIRED AT INSTALLATION LOCATIONS HAVING A CURVATURE OF LESS THAN 150 FT. RADIUS.
12. UNLESS OTHERWISE SHOWN IN THE PLANS, A COMPOSITE MATERIAL BLOCK THAT MEETS THE REQUIREMENTS OF DMS-7210, "COMPOSITE MATERIAL POSTS AND BLOCKS FOR METAL BEAM GUARD FENCE" MAY BE SUBSTITUTED FOR BLOCKS OF SIMILAR DIMENSIONS. THE CONSTRUCTION DIVISION, TXDOT MAINTAINS A MATERIAL PRODUCER LIST (MPL) FOR PRODUCERS OF MATERIALS CONFORMING TO DMS-7210 ONLY PRODUCERS ON THE MPL MAY FURNISH COMPOSITE MATERIAL BLOCKS.
13. FOR THE LOW FILL CULVERT OPTION, POSTS LOCATED PARTIALLY OR WHOLLY BETWEEN PRECAST BOX CULVERT UNITS, THE USE OF A CAST-IN-PLACE CONCRETE CLOSURE BETWEEN BOXES IS REQUIRED. THE LENGTH OF THE CAST-IN-PLACE CONCRETE CLOSURE SHALL ACCOMMODATE THE PLACEMENT OF THE LOW FILL CULVERT OPTION. SEE CONCRETE CLOSURE DETAILS ON BRIDGE STANDARD SCP-MD.
14. GUARDRAIL HEIGHT MEASUREMENT: WHEN THE GUARDRAIL IS LOCATED ABOVE PAVEMENT, MEASURE THE HEIGHT FROM THE PAVEMENT TO THE TOP OF THE W-BEAM RAIL. WHEN THE GUARDRAIL IS LOCATED UP TO 2 FT. OFF OF THE EDGE OF PAVEMENT OR FOR A PAVEMENT OVERLAY, USE A 10-FOOT STRAIGHTEDGE TO EXTEND THE PAVEMENT/SHOULDER SLOPE TO THE BACK OF RAIL. MEASURE FROM THE BOTTOM OF STRAIGHTEDGE TO THE TOP OF RAIL. FOR GUARDRAIL LOCATED DOWN A 10:1 SLOPE, MEASURE FROM THE NOMINAL TERRAIN.

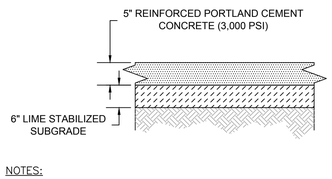

NOTES:

1. CONTRACTOR TO CONFIRM PAVEMENT SECTIONS WITH GEOTECHNICAL ENGINEER PRIOR TO CONSTRUCTION. BGE, INC. MAKES NO PRESENTATION OR WARRANTIES TO GEOTECHNICAL INFORMATION CONTAINED HEREIN.
2. REFER TO GEOTECHNICAL REPORT PREPARED BY ALPHA TESTING, INC. DATED SEPTEMBER 16TH, 2019 FOR SUBGRADE, EXPANSION JOINT, CONSTRUCTION JOINT, AND REINFORCING REQUIREMENTS.
3. JOINTS IN CONCRETE PAVING SHOULD NOT EXCEED 15 FT.

LIGHT DUTY PAVEMENT SECTION
NO SCALE

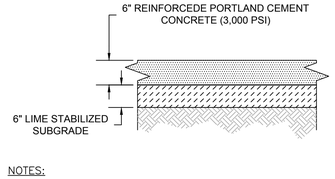

NOTES:

1. CONTRACTOR TO CONFIRM PAVEMENT SECTIONS WITH GEOTECHNICAL ENGINEER PRIOR TO CONSTRUCTION. BGE, INC. MAKES NO PRESENTATION OR WARRANTIES TO GEOTECHNICAL INFORMATION CONTAINED HEREIN.
2. REFER TO GEOTECHNICAL REPORT PREPARED BY ALPHA TESTING, INC. DATED SEPTEMBER 16TH, 2019 FOR SUBGRADE, EXPANSION JOINT, CONSTRUCTION JOINT, AND REINFORCING REQUIREMENTS.
3. JOINTS IN CONCRETE PAVING SHOULD NOT EXCEED 15 FT.

MEDIUM DUTY PAVEMENT SECTION
NO SCALE

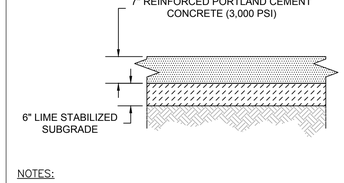

NOTES:

1. CONTRACTOR TO CONFIRM PAVEMENT SECTIONS WITH GEOTECHNICAL ENGINEER PRIOR TO CONSTRUCTION. BGE, INC. MAKES NO PRESENTATION OR WARRANTIES TO GEOTECHNICAL INFORMATION CONTAINED HEREIN.
2. REFER TO GEOTECHNICAL REPORT PREPARED BY ALPHA TESTING, INC. DATED SEPTEMBER 16TH, 2019 FOR SUBGRADE, EXPANSION JOINT, CONSTRUCTION JOINT, AND REINFORCING REQUIREMENTS.
3. JOINTS IN CONCRETE PAVING SHOULD NOT EXCEED 15 FT.

HEAVY DUTY PAVEMENT SECTION
NO SCALE

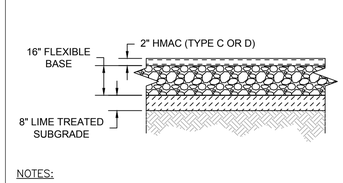

NOTES:

1. CONTRACTOR TO CONFIRM PAVEMENT SECTIONS WITH GEOTECHNICAL ENGINEER PRIOR TO CONSTRUCTION. BGE, INC. MAKES NO PRESENTATION OR WARRANTIES TO GEOTECHNICAL INFORMATION CONTAINED HEREIN.
2. REFER TO GEOTECHNICAL REPORT PREPARED BY ALPHA TESTING, INC. DATED MAY 20TH, 2020 FOR SUBGRADE, EXPANSION JOINT, CONSTRUCTION JOINT, AND REINFORCING REQUIREMENTS.
3. EXTEND BASE AND LIME SUBGRADE 3' BEYOND BACK OF CURB.

BOBCAT WAY PAVEMENT SECTION
NO SCALE

THE LOCATION OF EXISTING UNDERGROUND UTILITIES ARE SHOWN IN AN APPROXIMATE WAY ONLY. THE CONTRACTOR SHALL DETERMINE THE EXACT LOCATIONS OF ALL EXISTING UTILITIES BEFORE COMMENCING WORK. THE CONTRACTOR AGREES TO BE RESPONSIBLE FOR ANY AND ALL DAMAGES WHICH MIGHT BE OCCASIONED BY HIS FAILURE TO EXACTLY LOCATE ADN PRESERVE ANY AND ALL UNDERGROUND UTILITIES.

811 Know what's below. Call before you dig.

ADDRESS: 500 WESTINGHOUSE ROAD

REV	DESCRIPTION	DATE	APR

DESIGNED BY: JG
REVIEWED BY: BG
DRAWN BY: JG

BGE

BROWN & GAY ENGINEERS, INC.
1701 DIRECTORS BLVD, SUITE 1000
AUSTIN, TX 78731
TBPE Registration No. F-1046
TEL: 512-879-0400 www.brownjgay.com

500 WESTINGHOUSE ROAD

ASCEND WESTINGHOUSE
GEORGETOWN, TEXAS

SITE DETAILS (2 OF 2)

STATE OF TEXAS
9/29/2020
BRIAN J. GRACE
121846
LICENSED PROFESSIONAL ENGINEER

2020-41-SDP

SHEET
42 OF 76

G:\TXC\Projects\DHI_Communities\7616-00-Westinghouse\LD\01_CADD\01_Shts\02_Site Plan\7616-C-SP-DETL-SITE.dwg Layout: 29 SITE DETAILS 2 Plotted: 9/21/2020 9:46:14 AM

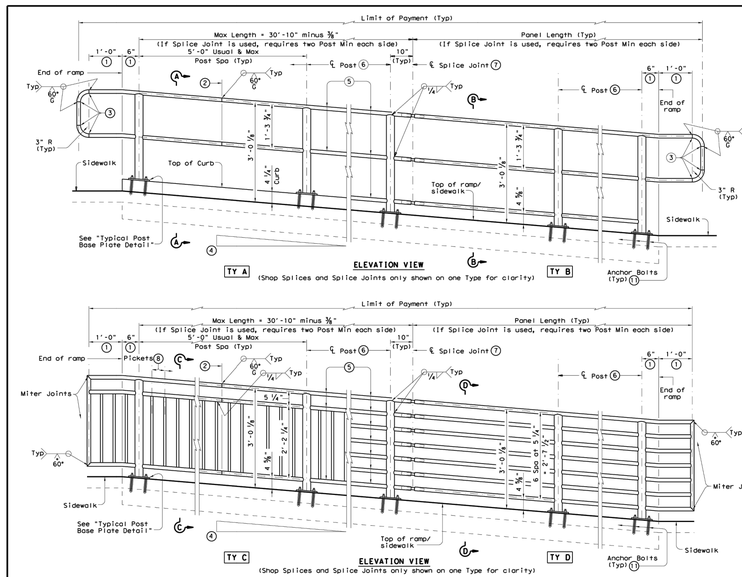

ELEVATION VIEW
(Shop Splices and Splice Joints only shown on one Type for clarity)

RECOMMENDED USAGE (9) (10)	
Dropoff Height/ Condition	Recommended Rail Options
< 30" dropoff	TY A, TY B, TY C, or TY D
≥ 30" dropoff, or along Bike Path	TY E or TY F

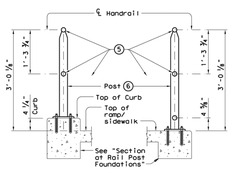

SECTION A-A
(Showing Handrail TY A)

SECTION B-B
(Showing Handrail TY B)

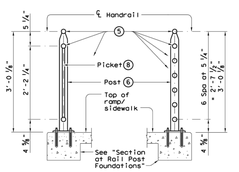

SECTION C-C
(Showing Handrail TY C)

SECTION D-D
(Showing Handrail TY D)

SHEET 1 OF 3

Texas Department of Transportation — Design Division Standard

PEDESTRIAN HANDRAIL DETAILS

PRD-13

FILE: prd13.dgn	DN: TxDOT	CK: RW	DW: JTR	CK: CGL
©TxDOT December 2006	CONT	SECT	JOB	HIGHWAY
REVISIONS				
REVISED MAY, 2013 (VP)	DIST	COUNTY		SHEET NO.

DISCLAIMER:
The use of this standard is governed by the "Texas Engineering Practice Act". No warranty of any kind is made by TxDOT for any purpose whatsoever. TxDOT assumes no responsibility for the conversion of this standard to other formats or for incorrect results or damages resulting from its use.

DATE:
FILE:

1. Parallel to ground.
2. One shop splice per panel is permitted with minimum 85 percent penetration. The weld may be square groove or single vee groove. Grind smooth.
3. Shop splice is permitted with minimum 85 percent penetration. The weld may be square groove or single vee groove. Grind smooth.
4. See Ramp Details located elsewhere in plans for ramp slope and dimensions. Maximum ramp slope will not exceed 8.3 percent. Level landing required for each 30" rise if grade exceeds 5 percent.
5. 1 ½" Dia. Standard Pipe (1.900" O.D., 0.145" wall thickness). Parallel to ramp / sidewalk. Provide holes as needed in 1 ½" Dia. pipe for galvanizing drainage and venting.
6. 2 ½" Dia. Standard Pipe (2.875" O.D., 0.203" wall thickness). See "Post Mount Detail" for crimping and trimming post to fit Dia. of top rail. Provide holes as needed in post for galvanizing drainage and venting. Plumb all posts.
7. See "Handrail Fabrication Details" for Splice Joints.
8. ℄ ⅜" Dia. Round Bar equal spacing at 4 ½" Max. Plumb all pickets.
9. When needed for accessibility (grade > 5 percent) or as needed for pedestrian safety.
10. Not to be used on bridges.
11. See "General Notes" for anchor bolt information.

ELEVATION VIEW
(Shop Splices and Splice Joints only shown on one Type for clarity)

SECTION C-C
(Showing Handrail TY C)

SECTION D-D
(Showing Handrail TY D)

SHEET 1 OF 3

Texas Department of Transportation — Design Division Standard

PEDESTRIAN HANDRAIL DETAILS

PRD-13

FILE: prd13.dgn	DN: TxDOT	CK: RW	DW: JTR	CK: CGL
©TxDOT December 2006	CONT	SECT	JOB	HIGHWAY
REVISIONS				
REVISED MAY, 2013 (VP)	DIST	COUNTY		SHEET NO.

DISCLAIMER:
The use of this standard is governed by the "Texas Engineering Practice Act". No warranty of any kind is made by TxDOT for any purpose whatsoever. TxDOT assumes no responsibility for the conversion of this standard to other formats or for incorrect results or damages resulting from its use.

DATE:
FILE:

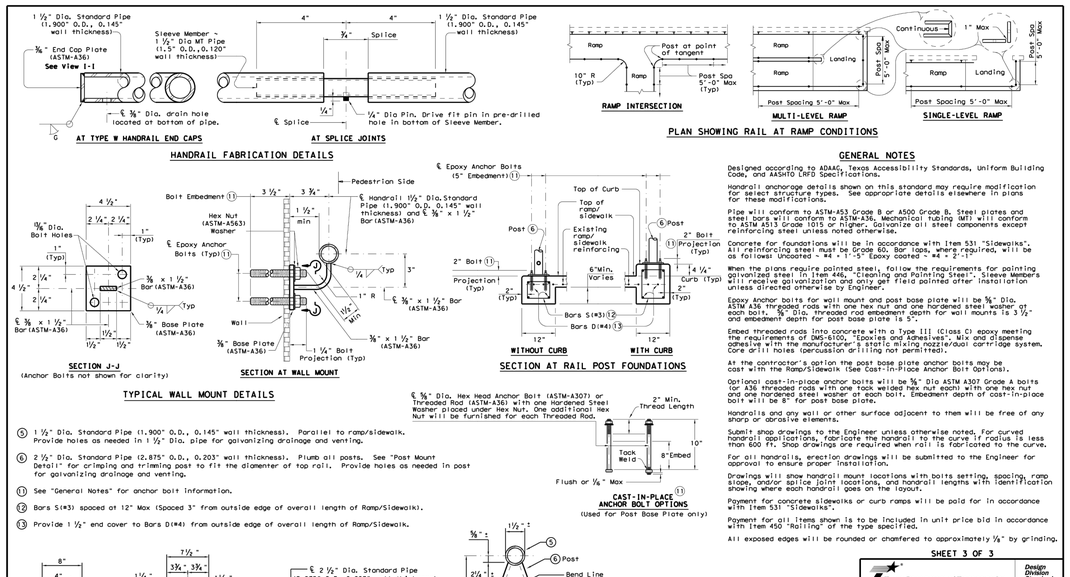

AT TYPE W HANDRAIL END CAPS

AT SPLICE JOINTS

HANDRAIL FABRICATION DETAILS

RAMP INTERSECTION

MULTI-LEVEL RAMP

SINGLE-LEVEL RAMP

PLAN SHOWING RAIL AT RAMP CONDITIONS

SECTION J-J
(Anchor Bolts not shown for clarity)

SECTION AT WALL MOUNT

TYPICAL WALL MOUNT DETAILS

SECTION AT RAIL POST FOUNDATIONS

GENERAL NOTES

Designed according to ADAAG, Texas Accessibility Standards, Uniform Building Code, and AASHTO LRFD Specifications.

Handrail anchorage details shown on this standard may require modification for select structure types. See appropriate details elsewhere in plans for these modifications.

Pipe will conform to ASTM-A53 Grade B or A500 Grade B. Steel plates and steel bars will conform to ASTM-A36. Mechanical tubing (MT) will conform to ASTM A513 Grade 1015 or higher. Galvanize all steel components except reinforcing steel unless noted otherwise.

Concrete for foundations will be in accordance with Item 531 "Sidewalks". All reinforcing steel must be Grade 60. Bar laps, where required, will be as follows: Uncoated ~ #4 = 1'-5" Epoxy coated ~ #4 = 2'-1"

When the plans require painted steel, follow the requirements for painting galvanized steel in Item 446, "Cleaning and Painting Steel". Sleeve members will receive galvanization and only get field painted after installation unless directed otherwise by Engineer.

Epoxy Anchor bolts for wall mount and post base plate will be ⅝" Dia. ASTM A36 threaded rods with one hex nut and one hardened steel washer at each bolt. ⅝" Dia. threaded rod embedment depth for wall mounts is 3 ½" and embedment depth for post base plate is 5".

Embed threaded rods into concrete with a Type III (Class C) epoxy meeting the requirements of DMS-6100, "Epoxies and Adhesives". Mix and dispense adhesive with the manufacturer's static mixing nozzle/dual cartridge system. Core drill holes (percussion drilling not permitted).

At the contractor's option the post base plate anchor bolts may be cast in the Ramp/Sidewalk (See Cast-In-Place Anchor Bolt Options).

Optional cast-in-place anchor bolts will be ⅝" Dia ASTM A307 Grade A bolts for A36 threaded rods with one hex, welded hex nut each with one hex nut and one hardened steel washer at each bolt. Embedment depth of cast-in-place bolt will be 8" for post base plate.

Handrails and any wall or other surface adjacent to them will be free of any sharp or abrasive elements.

Submit shop drawings to the Engineer unless otherwise noted. For curved handrail applications, fabricate the handrail to the curve if radius is less than 600 ft. Shop drawings are required when rail is fabricated to the curve.

For all handrails, erection drawings will be submitted to the Engineer for approval to ensure proper installation.

Drawings will show handrail mount locations with bolts setting, spacing, ramp slope, and/or splice joint locations, and handrail lengths with identification showing where each handrail goes on the layout.

Payment for concrete sidewalks or curb ramps will be paid for in accordance with Item 531 "Sidewalks".

Payment for all items shown is to be included in unit price bid in accordance with Item 450 "Railing" of the type specified.

All exposed edges will be rounded or chamfered to approximately ⅛" by grinding.

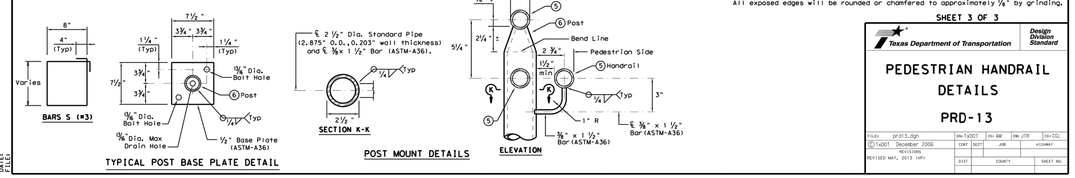

⅝" Dia. Hex Head Anchor Bolt (ASTM-A307) or Threaded Rod (ASTM-A36) with one Hardened Steel Washer placed under Hex Nut. One additional Hex Nut will be furnished for each Threaded Rod.

CAST-IN-PLACE ANCHOR BOLT OPTIONS
(Used for Post Base Plate only)

SHEET 3 OF 3

Texas Department of Transportation — Design Division Standard

PEDESTRIAN HANDRAIL DETAILS

PRD-13

FILE: prd13.dgn	DN: TxDOT	CK: RW	DW: JTR	CK: CGL
©TxDOT December 2006	CONT	SECT	JOB	HIGHWAY
REVISIONS				
REVISED MAY, 2013 (VP)	DIST	COUNTY		SHEET NO.

DISCLAIMER:
The use of this standard is governed by the "Texas Engineering Practice Act". No warranty of any kind is made by TxDOT for any purpose whatsoever. TxDOT assumes no responsibility for the conversion of this standard to other formats or for incorrect results or damages resulting from its use.

DATE:
FILE:

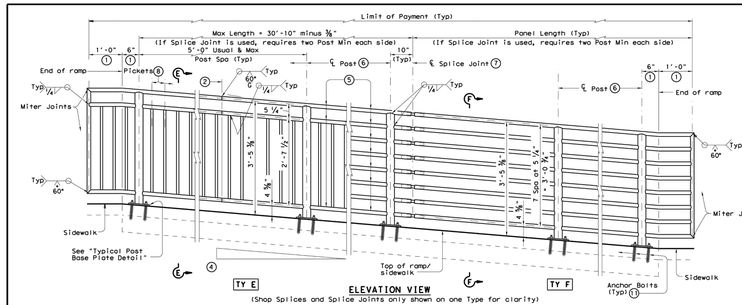

ELEVATION VIEW
(Shop Splices and Splice Joints only shown on one Type for clarity)

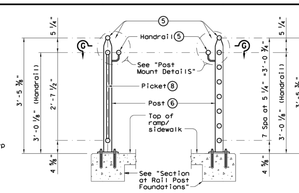

SECTION E-E
(Showing Handrail TY E)

SECTION F-F
(Showing Handrail TY F)

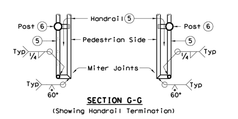

SECTION G-G
(Showing Handrail Termination)

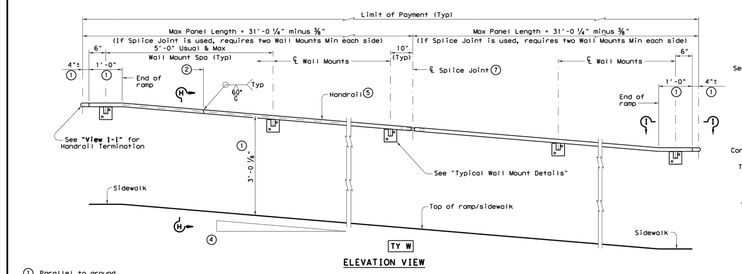

ELEVATION VIEW

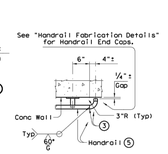

VIEW I-I
(Showing Handrail Termination)

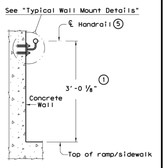

SECTION H-H
(Showing Handrail TY W)

SHEET 2 OF 3

Texas Department of Transportation — Design Division Standard

PEDESTRIAN HANDRAIL DETAILS

PRD-13

FILE: prd13.dgn	DN: TxDOT	CK: RW	DW: JTR	CK: CGL
©TxDOT December 2006	CONT	SECT	JOB	HIGHWAY
REVISIONS				
REVISED MAY, 2013 (VP)	DIST	COUNTY		SHEET NO.

DISCLAIMER:
The use of this standard is governed by the "Texas Engineering Practice Act". No warranty of any kind is made by TxDOT for any purpose whatsoever. TxDOT assumes no responsibility for the conversion of this standard to other formats or for incorrect results or damages resulting from its use.

DATE:
FILE:

1. Parallel to ground.
2. One shop splice per panel is permitted with minimum 85 percent penetration. The weld may be square groove or single vee groove. Grind smooth.
3. Shop splice is permitted with minimum 85 percent penetration. The weld may be square groove or single vee groove. Grind smooth.
4. See Ramp Details located elsewhere in plans for ramp slope and dimensions. Maximum ramp slope will not exceed 8.3 percent. Level landing required for each 30" rise if grade exceeds 5 percent.
5. 1 ½" Dia. Standard Pipe (1.900" O.D., 0.145" wall thickness). Parallel to ramp / sidewalk. Provide holes as needed in 1 ½" Dia. pipe for galvanizing drainage and venting.
6. 2 ½" Dia. Standard Pipe (2.875" O.D., 0.203" wall thickness). See "Post Mount Detail" for crimping and trimming post to fit Dia. of top rail. Provide holes as needed in post for galvanizing drainage and venting. Plumb all posts.
7. See "Handrail Fabrication Details" for Splice Joints.
8. ℄ ⅜" Dia. Round Bar equal spacing at 4 ½" Max. Plumb all pickets.
9. When needed for accessibility (grade > 5 percent) or as needed for pedestrian safety.
10. Not to be used on bridges.
11. See "General Notes" for anchor bolt information.

REV	DESCRIPTION	DATE	APR

DESIGNED BY: JG

REVIEWED BY: BG

DRAWN BY: JG

BROWN & GAY ENGINEERS, INC.
1701 DIRECTORS BLVD, SUITE 1000
AUSTIN, TX 78731
TBPE Registration No. F-1046
TEL: 512-879-0400 www.brownjay.com

500 WESTINGHOUSE ROAD

THE LOCATION OF EXISTING UNDERGROUND UTILITIES ARE SHOWN IN AN APPROXIMATE WAY ONLY. THE CONTRACTOR SHALL DETERMINE THE EXACT LOCATIONS OF ALL EXISTING UTILITIES BEFORE COMMENCING WORK. HE AGREES TO BE FULLY RESPONSIBLE FOR ANY AND ALL DAMAGES WHICH MIGHT BE OCCASIONED BY HIS FAILURE TO EXACTLY LOCATE ADN PRESERVE ANY AND ALL UNDERGROUND UTILITIES.

Know what's below. Call before you dig.

ADDRESS: 500 WESTINGHOUSE ROAD

ASCEND WESTINGHOUSE
GEORGETOWN, TEXAS

SITE DETAILS (3 OF 3)

STATE OF TEXAS — BRIAN J. GRACE — 121846 — LICENSED PROFESSIONAL ENGINEER — 9/21/2020

SHEET
43 OF 76

2020-41-SDP

G:\TXC\Projects\DHL_Communities\7616-00-Westinghouse\LD\01_CADD\01_Shts\02_Site Plan\7616-C-SP-DETL-SITE.dwg Layout: 30 SITE DETAILS 3 Plotted: 9/21/2020 9:46:16 AM

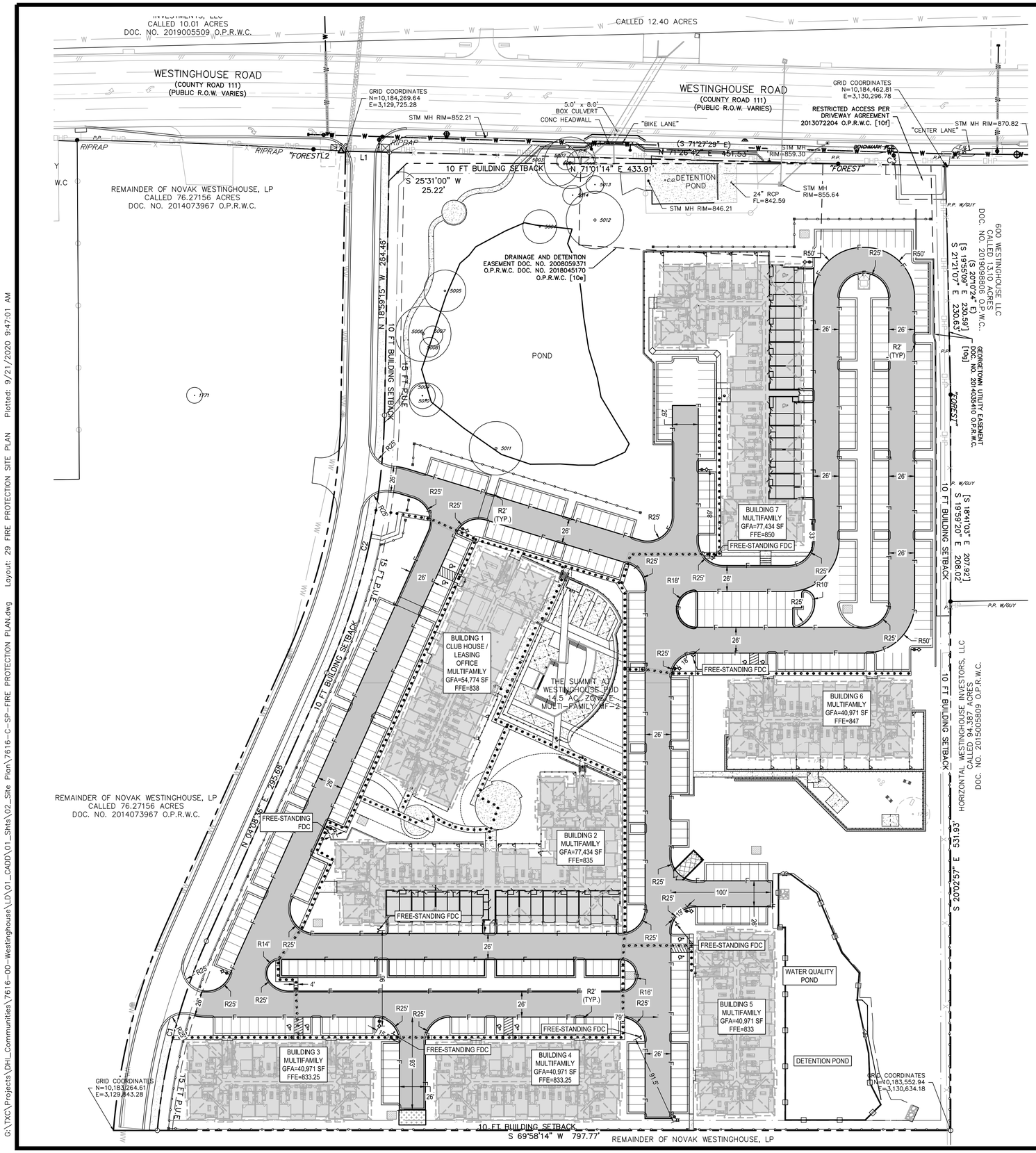

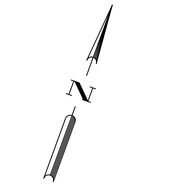

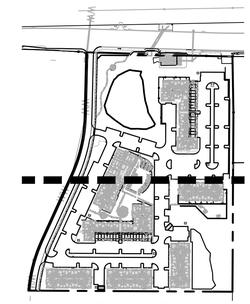

KEY MAP (N.T.S)

LEGEND

- FIRE HYDRANT
- FIRE DEPARTMENT CONNECTION (FDC)
- FIRE LANE

NOTES:

1. PRIOR TO CONSTRUCTION ABOVE THE SLAB, PROVIDE AN ALL WEATHER DRIVE SURFACE OF ASPHALT OR CONCRETE OR CHIP SEAL PLACED ONTO BASE MATERIAL ENGINEERED TO WITHSTAND 80,000 lbs. AN ACCEPTANCE INSPECTION BY FIRE PREVENTION IS REQUIRED.
2. ALL CURBS AND CURB ENDS SHALL BE PAINTED RED WITH FOUR-INCH WHITE LETTERING STATING "NO PARKING – FIRE LANE – TOW AWAY ZONE". WORDING MAY NOT BE SPACED MORE THAN 15 ft APART.
3. FROM THE POINT THE FIRE LANE BEGINS TO THE POINT THE FIRE LAND ENDS, INCLUDING BEHIND ALL PARKING SPACES WHICH ADJOIN A FIRE LANE, SHALL BE MARKED WITH ONE CONTINUOUS 8-INCH RED STRIPE PAINTED ON THE DRIVE SURFACE BEHIND THE PARKING SPACES. ALL CURBING ADJOINING A FIRE LANE MUST BE PAINTED RED. RED STRIPES AND CURBS WILL CONTAIN THE WORDING "NO PARKING – FIRE LANE – TOW AWAY ZONE" PAINTED IN FOUR-INCH WHITE LETTERS.
4. AT THE CONCLUSION OF CONSTRUCTION AND AS PART OF THE PROCESS FOR THE CITY TO ACCEPT THIS PHASE, THE FIRE HYDRANTS SHALL BE FLOWED AND TESTED A COPY OF THE REPORT SHALL BE EMAILED INTO THE FIRE DEPARTMENT AND THE HYDRANTS SHALL BE PAINTED AND COLOR CODED.
   *** CAUTION IF PRESSURE REDUCING VALVES WERE INSTALLED IN THIS PHASING THEY MUST BE SET PRIOR TO FIRE HYDRANT FLOW TESTING.***
5. LA-507.5.7 FIRE HYDRANT MAINTENANCE.
   A. ALL PRIVATE HYDRANT BARRELS WILL BE PAINTED RED WITH THE BONNET PAINTED USING THE HYDRANT FLOW STANDARD IN PARAGRAPH C OF THIS SECTION TO INDICATE FLOW. IT WILL BE THE CUSTOMER'S RESPONSIBILITY TO TEST AND MAINTAIN THEIR PRIVATE FIRE HYDRANT(S).
   B. ALL PRIVATE FIRE HYDRANTS SHOULD BE TESTED ANNUALLY AND SHALL BE COLOR CODED TO INDICATE THE EXPECTED FIRE FLOW FROM THE HYDRANT DURING NORMAL OPERATION. SUCH COLOR APPLIED TO THE FIRE HYDRANT BY PAINTING THE BONNET THE APPROPRIATE COLOR FOR THE EXPECTED FLOW CONDITION.
   C. HYDRANT FLOW CODING STANDARDS. PUBLIC HYDRANTS WILL HAVE THE BONNETS PAINTED SILVER, THE HYDRANTS WILL BE FLOW TESTED, AND THE BONNET PAINTED USING THE HYDRANT FLOW STANDARD IN PARAGRAPH C.

FLOW	COLOR
GREATER THAN 1500 GPM	BLUE
1000 TO 1500 GPM	GREEN
500 TO 999 GPM	ORANGE
LESS THAN 500 GPM	RED
NOT WORKING	BLACK OR BAGGED

Building No.	Residual Pressure
1	48.55 psi
2	50.92 psi
3	48.83 psi
4	49.77 psi
5	50.95 psi
6	49.19 psi
7	50.16 psi

Residual Pressure at the Highest Lot	59.59 psi
Residual Pressure at the Lowest Lot	70.48 psi

ADDRESS: 500 WESTINGHOUSE ROAD

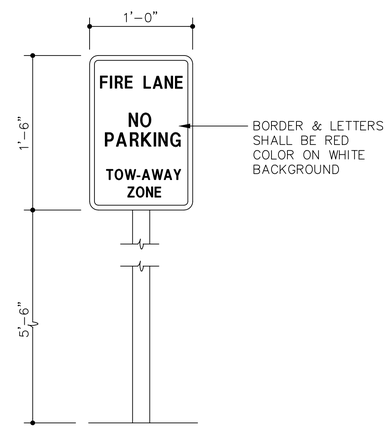

1 FIRE LANE SIGNAGE

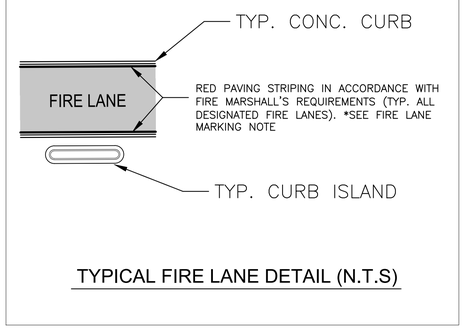

TYPICAL FIRE LANE DETAIL (N.T.S)

(OPTIONAL AT FIRE MARSHALL'S DISCRETION)

REV	DESCRIPTION	DATE	APR

DESIGNED BY: JG
REVIEWED BY: BG
DRAWN BY: JG

BGE
BROWN & GAY ENGINEERS, INC.
1701 DIRECTORS BLVD, SUITE 1000
AUSTIN, TX 78731
TBPE Registration No. F-1046
TEL: 512-879-0400 www.brownggy.com

ASCEND WESTINGHOUSE GEORGETOWN, TEXAS

FIRE PROTECTION SITE PLAN

STATE OF TEXAS
BRIAN J. GRACE
121846
LICENSED
PROFESSIONAL ENGINEER
9/21/2020

SHEET 44 OF 76

500 WESTINGHOUSE ROAD

2020-41-SDP

G:\TXC\Projects\DHI_Communities\7616-00-Westinghouse\LD\01_CADD\01_Shts\02_Site Plan\7616-C-SP-FIRE PROTECTION PLAN.dwg Layout: 29 FIRE PROTECTION SITE PLAN Plotted: 9/21/2020 9:47:01 AM

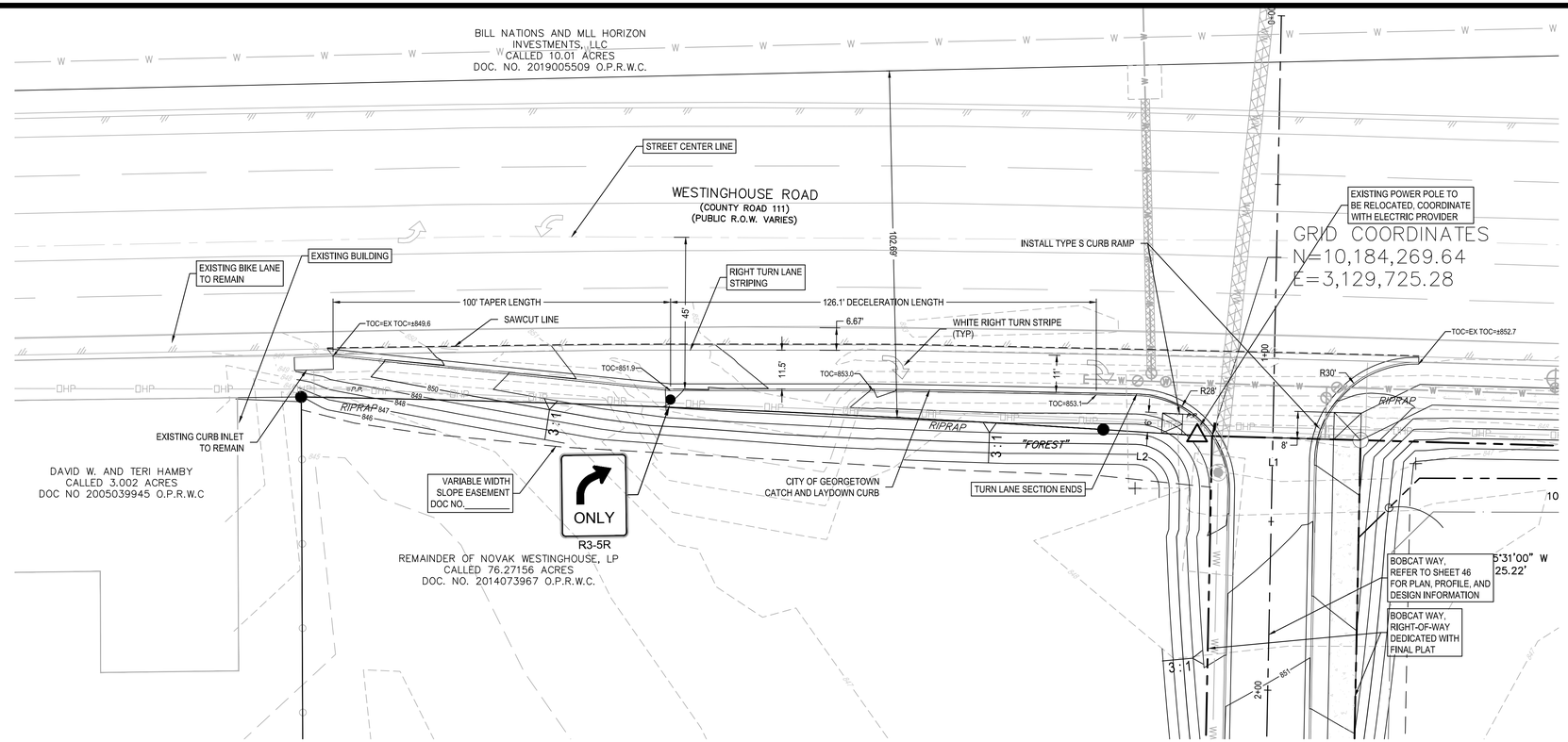

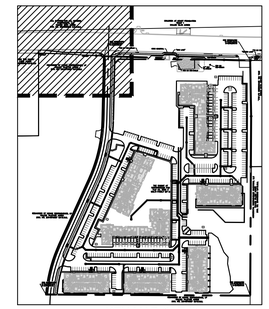

KEY MAP (N.T.S)

NOTES:
1. REFER TO SHEET 36 FOR EXISTING CURB, PAVEMENT, AND DRIVEWAY REMOVAL INFORMATION.
2. PAVEMENT SECTION FOR TURN LANE TO MATCH EXISTING WESTINGHOUSE ROAD PAVEMENT SECTION.
3. DECEL LANE SHALL FOLLOW THE STREET AS-BUILT PAVEMENT SECTION INCLUDED ON SHEET 45.

WESTINGHOUSE ROAD - RIGHT TURN DECELERATION LANE PLAN

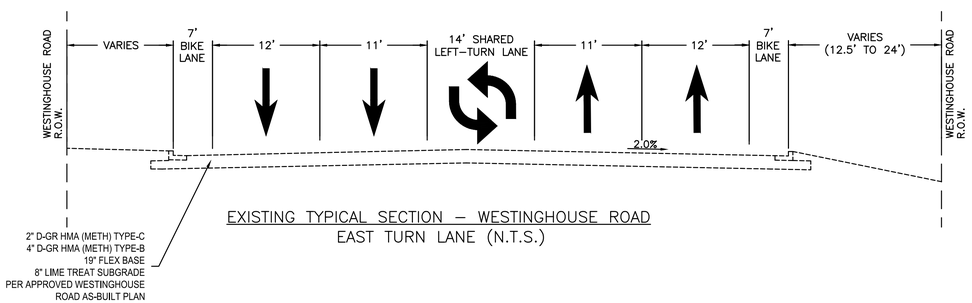

EXISTING TYPICAL SECTION – WESTINGHOUSE ROAD
EAST TURN LANE (N.T.S.)

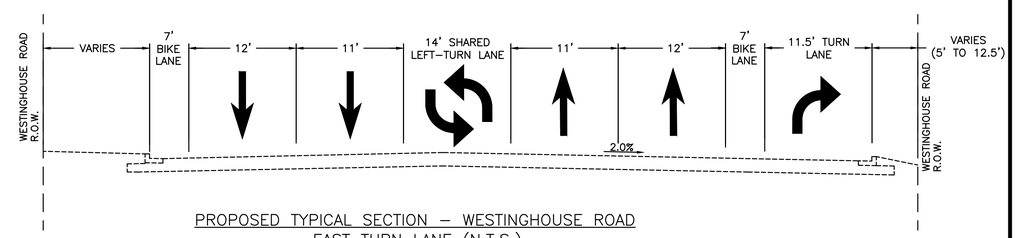

PROPOSED TYPICAL SECTION – WESTINGHOUSE ROAD
EAST TURN LANE (N.T.S.)

REFERENCE ONLY

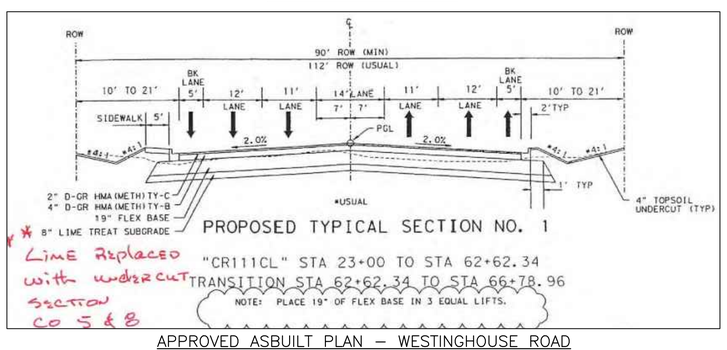

APPROVED ASBUILT PLAN – WESTINGHOUSE ROAD
EXISTING PAVEMENT SECTION (N.T.S.)

ADDRESS: 500 WESTINGHOUSE ROAD

THE LOCATION OF EXISTING UNDERGROUND UTILITIES ARE SHOWN IN AN APPROXIMATE WAY ONLY. THE CONTRACTOR SHALL DETERMINE THE EXACT LOCATION OF ALL EXISTING UTILITIES BEFORE COMMENCING WORK. HE AGREES TO BE FULLY RESPONSIBLE FOR ANY AND ALL DAMAGES WHICH MIGHT BE OCCASIONED BY HIS FAILURE TO EXACTLY LOCATE ADN PRESERVE ANY AND ALL UNDERGROUND UTILITIES.

REV	DESCRIPTION	DATE	APR

DESIGNED BY: JG
REVIEWED BY: BG
DRAWN BY: JG

BROWN & GAY ENGINEERS, INC.
1701 DIRECTORS BLVD, SUITE 1000
AUSTIN, TX 78731
TBPE Registration No. F-1046
TEL: 512-879-0400 www.brownjay.com

ASCEND WESTINGHOUSE
GEORGETOWN, TEXAS

WESTINGHOUSE RD – RIGHT TURN LANE PLAN

STATE OF TEXAS
BRIAN J. GRACE
121846
LICENSED PROFESSIONAL ENGINEER
9/21/2020

SHEET 45 OF 76

500 WESTINGHOUSE ROAD

2020-41-SDP

G:\TXC\Projects\DHI_Communities\7616-00-Westinghouse\LD\01_CADD\01_Shts\02_Site Plan\7616-C-SP-TURN LANE PLAN.dwg Layout: WESTINGHOUSE RD - RIGHT TURN LANE PLAN Plotted: 9/21/2020 10:15:09 AM

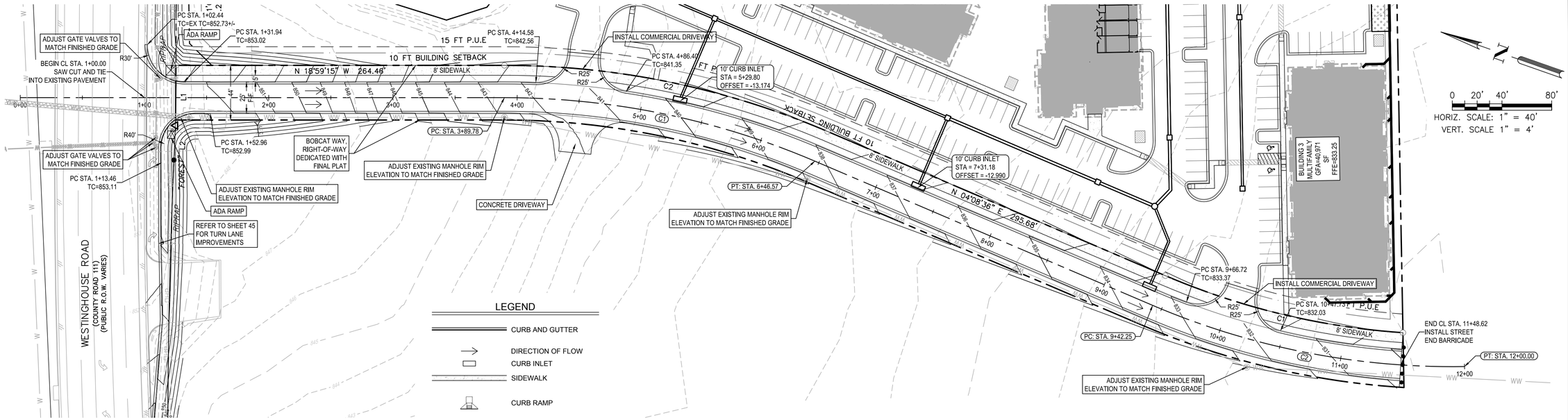

BOBCAT WAY
(DESIGN SPEED 35 MPH)

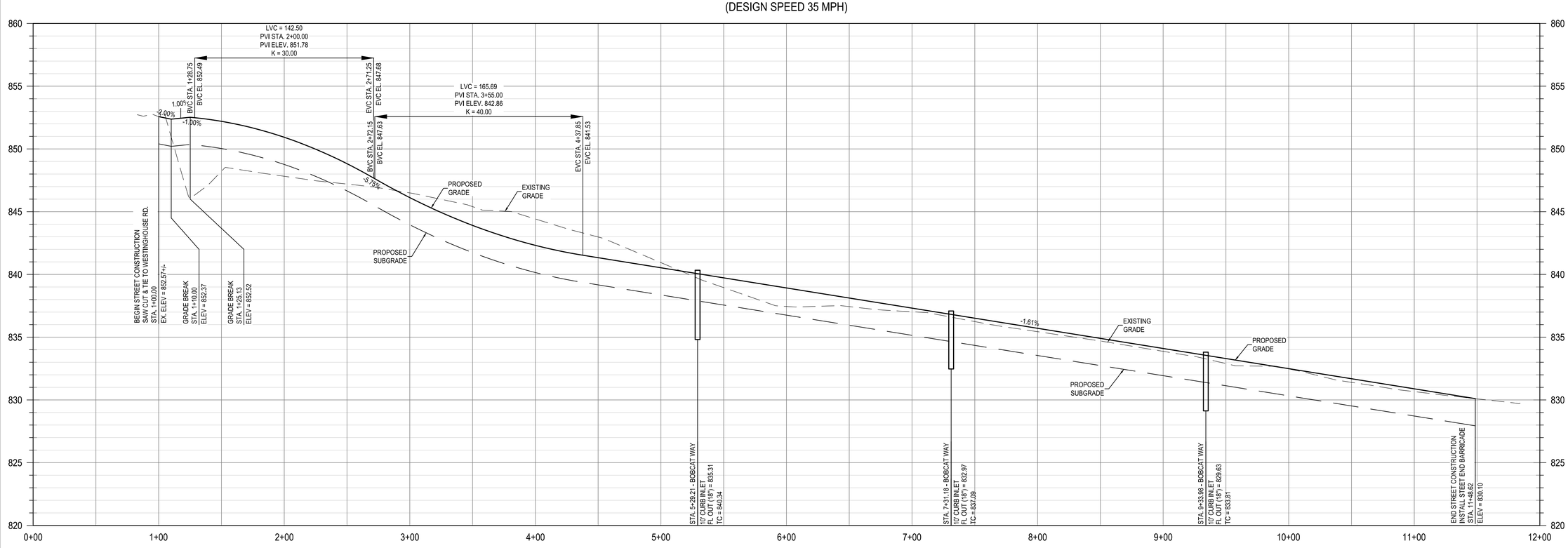

PROFILE LEGEND

- TOP OF CURB
- SUBGRADE
- EXISTING GRADE
- CURB INLET

NOTES:

1. THE LOCATION OF EXISTING UNDERGROUND UTILITIES ARE SHOWN IN AN APPROXIMATE WAY AND HAVE NOT BEEN INDEPENDENTLY VERIFIED BY THE OWNER OR ITS REPRESENTATIVE. THE CONTRACTOR SHALL DETERMINE THE EXACT LOCATION OF ALL EXISTING UTILITIES BEFORE COMMENCING WORK. THE CONTRACTOR AGREES TO BE FULLY RESPONSIBLE FOR ANY AND ALL DAMAGES WHICH MIGHT BE ASSOCIATED WITH THE CONTRACTORS FAILURE TO LOCATE AND PRESERVE ANY AND ALL UNDERGROUND UTILITIES.
2. ALL DIMENSIONS ARE FACE OF CURB UNLESS OTHERS NOTED.

Curve Table: Alignments

CURVE	DELTA ANGLE	RADIUS	ARC LENGTH	CHORD DIRECTION	CHORD DISTANCE
C1	23°07'50"	636.07'	256.78'	S07° 25' 20.08"E	255.04'
C2	24°02'57"	614.08'	257.75'	S07° 52' 53.59"E	255.87'

Know what's below. Call before you dig.

THE LOCATION OF EXISTING UNDERGROUND UTILITIES ARE SHOWN IN AN APPROXIMATE WAY ONLY. THE CONTRACTOR SHALL DETERMINE THE EXACT LOCATION OF ALL EXISTING UTILITIES BEFORE COMMENCING WORK. HE AGREES TO BE FULLY RESPONSIBLE FOR ANY AND ALL DAMAGES WHICH MIGHT BE OCCASIONED BY HIS FAILURE TO EXACTLY LOCATE ADN PRESERVE ANY AND ALL UNDERGROUND UTILITIES.

ADDRESS: 500 WESTINGHOUSE ROAD

REV	DESCRIPTION	DATE	APR

DESIGNED BY: JG
REVIEWED BY: BG
DRAWN BY: JG

BGE

BROWN & GAY ENGINEERS, INC.
1701 DIRECTORS BLVD, SUITE 1000
AUSTIN, TX 78731
TBPE Registration No. F-1046
TEL: 512-879-0400 www.brownjgay.com

ASCEND WESTINGHOUSE
GEORGETOWN, TEXAS

BOBCAT WAY – COLLECTOR RD
PLAN & PROFILE

STATE OF TEXAS
BRIAN J. GRACE
121846
LICENSED PROFESSIONAL ENGINEER
9/21/2020

SHEET 46 OF 76

2020-41-SDP

500 WESTINGHOUSE ROAD

G:\TXC\Projects\DHI_Communities\7616-00-Westinghouse\LD\01_CADD\01_Sits\02_Site Plan\7616-C-SP-COLLECTOR RD PLAN.dwg Layout: BOBCAT WAY - COLLECTOR RD PLAN & PROFILE Plotted: 9/21/2020 9:48:26 AM

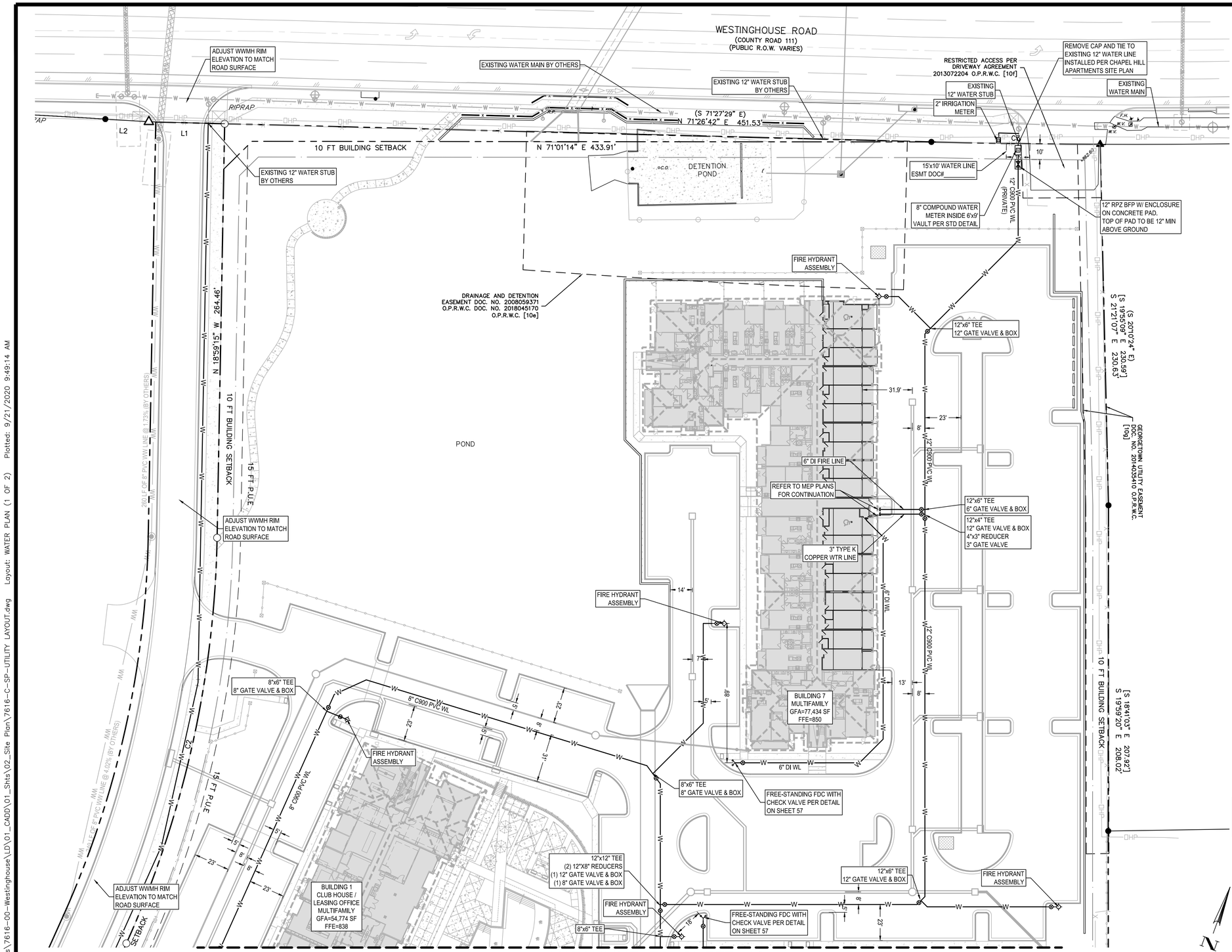

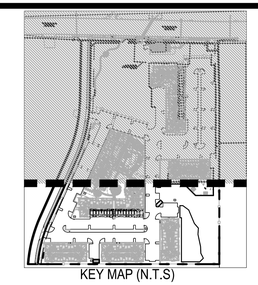

KEY MAP (N.T.S)

LEGEND

- PROPERTY BOUNDARY
- PROPOSED RIGHT OF WAY
- EXISTING MAJOR CONTOUR
- EXISTING MINOR CONTOUR
- FIRE HYDRANT ASSEMBLY
- GATE VALVE
- CAP
- FIRE DEPARTMENT CONNECTION
- WASTEWATER LINE
- WASTEWATER MANHOLE
- DIRECTION OF FLOW
- CLEANOUT

* ALL WATER SYMBOLS ARE NOT TO SCALE AND ARE ONLY SHOWN FOR ILLUSTRATION PURPOSES.

* ALL WASTEWATER SYMBOLS ARE NOT TO SCALE, AND ARE ONLY SHOWN FOR ILLUSTRATION PURPOSES. REFER TO DETAILS SHOWN IN THIS PLAN SET.

NOTES:

1. WATER AND WASTE WATER SERVICE TO BE PROVIDED BY GEORGETOWN UTILITY SYSTEMS.
2. UNDERGROUND MAINS FEEDING NFPA 13 SPRINKLER SYSTEMS MUST BE INSTALLED AND TESTED IN ACCORDANCE WITH NFPA 13, AND THE FIRE CODE, BY A LICENSED SPRINKLER CONTRACTOR WITH A PLUMBING PERMIT. THE ENTIRE MAIN MUST BE HYDROSTATICALLY TESTED AT ONE TIME UNLESS ISOLATION VALVES ARE PROVIDED BETWEEN TESTED SECTIONS.
3. UNDERGROUND MAINS FEEDING PRIVATE FIRE HYDRANTS MUST BE INSTALLED AND TESTED IN ACCORDANCE WITH NFPA 24, AND THE FIRE CODE, BY A LICENSED CONTRACTOR WITH A PLUMBING PERMIT. THE ENTIRE MAIN MUST BE HYDROSTATICALLY TESTED AT ONE TIME UNLESS ISOLATION VALVES ARE PROVIDED BETWEEN TESTED SECTIONS.
4. CONTRACTOR SHALL LOCATE ALL EXISTING UTILITIES, BOTH HORIZONTALLY AND VERTICALLY, PRIOR TO UTILITY INSTALLATION. CONTRACTOR SHALL NOTIFY ENGINEER IMMEDIATELY OF ANY DISCREPANCY BETWEEN THE PLANS AND EXISTING UTILITIES IN THE FIELD.
5. GATE VALVES AND FIRE HYDRANTS ARE NOT ALLOWED IN CURBS, GUTTER PANS, OR SIDEWALKS.
6. ALL PRIVATE WATERLINES SHALL BE C900 PVC UNLESS OTHERWISE SPECIFIED.
7. CONTRACTOR SHALL RAISE VALVES, HYDRANTS, AND OTHER APPURTENANCES TO FINISHED GRADE UPON COMPLETION OF PAVING.
8. ALL FIRE SERVICE PIPE FITTINGS AND APPURTENANCES SHALL COMPLY WITH NFPA 24.
9. ALL WATER MAINS SHALL HAVE 4 FOOT MINIMUM COVER FROM FINISHED GRADE.
10. CONTRACTOR SHALL PROVIDE A MINIMUM 1.5' CLEARANCE BETWEEN PIPES AT WATER AND STORM SEWER CROSSINGS.
11. UNDERGROUND MAINS FEEDING NFPA 13 SPRINKLER SYSTEMS MUST BE INSTALLED AND TESTED IN ACCORDANCE WITH NFPA 13, AND THE FIRE CODE, BY A LICENSED SPRINKLER CONTRACTOR WITH A PLUMBING PERMIT. THE ENTIRE MAIN MUST BE HYDROSTATICALLY TESTED AT ONE TIME, UNLESS ISOLATION VALVES ARE PROVIDED BETWEEN TESTED SECTIONS.
12. UNDERGROUND MAINS FEEDING PRIVATE HYDRANTS MUST BE INSTALLED AN TESTED IN ACCORDANCE WITH NFPA 24, AND THE PERMIT. THE ENTIRE MAIN MUST BE HYDROSTATICALLY TESTED AT ONE TIME, UNLESS ISOLATION VALVES ARE PROVIDED BETWEEN TESTED SECTIONS.
13. ALL WATER LINE TO BE C900 DR 14 PVC 305 PSI. UNLESS NOTED OTHERWISE
14. ALL FIRE HYDRANTS ON SITE TO BE PRIVATE.
15. WATER METER MUST BE AMI COMPATIBLE AND TO BE ORDERED WITH A 25 FOOT NICOR.

PRIVATE FIRE HYDRANTS

UNDERGROUND MAINS FEEDING THE PROPOSED NINE (9) PRIVATE FIRE HYDRANTS MUST BE INSTALLED AND TESTED IN ACCORDANCE WITH NFPAG 24, AND THE FIRE CODE BY A LICENSED CONTRACTOR WITH A PLUMBING PERMIT. THE ENTIRE MAIN MUST BE HYDROSTATICALLY TESTED AT ONE TIME UNLESS ISOLATION VALVES ARE PROVIDED IN BETWEEN TESTED SECTIONS.

WATER PRESSURE AT HIGHEST & LOWEST BUILDING

	Tower Level at 143.3	Tower Level (Low) at 120.65
Highest FFE Building #7	59.94 psi	50.94 psi
Lowest FFE Building #5	67.09 psi	58.09 psi

WATER DEMAND PROJECTION

Residential avg day demand	136 gal/capita/day
1 lue=2.5 people	60392.50 gal/day
	41.9 gpm
Max day to avg day ratio	2.13
	89.3 gpm
Peak hour to Max day ratio	1.8
	160.8 gpm

ADDRESS: 500 WESTINGHOUSE ROAD

0 15' 30' 60'
SCALE: 1" = 30'

REV	DESCRIPTION	DATE	APR

DESIGNED BY: JG
REVIEWED BY: BG
DRAWN BY: JG

BGE
BROWN & GAY ENGINEERS, INC.
1701 DIRECTORS BLVD, SUITE 1000
AUSTIN, TX 78731
TBPE Registration No. F-1046
TEL: 512-879-0400 www.brownggy.com

500 WESTINGHOUSE ROAD

ASCEND WESTINGHOUSE
GEORGETOWN, TEXAS

WATER DISTRIBUTION PLAN (1 OF 2)

STATE OF TEXAS
BRIAN J. GRACE
121846
LICENSED PROFESSIONAL ENGINEER
9/21/2020

SHEET
47 OF 76

2020-41-SDP

G:\TXC\Projects\DHI_Communities\7616-00-Westinghouse\LD\01_CADD\01_Shts\02_Site Plan\7616-C-SP-UTILITY LAYOUT.dwg Layout: WATER PLAN (1 OF 2) Plotted: 9/21/2020 9:49:14 AM

NOTES:

1. WATER AND WASTE WATER SERVICE TO BE PROVIDED BY GEORGETOWN UTILITY SYSTEMS.
2. UNDERGROUND MAINS FEEDING NFPA 13 SPRINKLER SYSTEMS MUST BE INSTALLED AND TESTED IN ACCORDANCE WITH NFPA 13, AND THE FIRE CODE, BY A LICENSED SPRINKLER CONTRACTOR WITH A PLUMBING PERMIT. THE ENTIRE MAIN MUST BE HYDROSTATICALLY TESTED AT ONE TIME UNLESS ISOLATION VALVES ARE PROVIDED BETWEEN TESTED SECTIONS.
3. UNDERGROUND MAINS FEEDING PRIVATE FIRE HYDRANTS MUST BE INSTALLED AND TESTED IN ACCORDANCE WITH NFPA 24, AND THE FIRE CODE, BY A LICENSED CONTRACTOR WITH A PLUMBING PERMIT. THE ENTIRE MAIN MUST BE HYDROSTATICALLY TESTED AT ONE TIME UNLESS ISOLATION VALVES ARE PROVIDED BETWEEN TESTED SECTIONS.
4. CONTRACTOR SHALL LOCATE ALL EXISTING UTILITIES, BOTH HORIZONTALLY AND VERTICALLY, PRIOR TO UTILITY INSTALLATION. CONTRACTOR SHALL NOTIFY ENGINEER IMMEDIATELY OF ANY DISCREPANCY BETWEEN THE PLANS AND EXISTING UTILITIES IN THE FIELD.
5. GATE VALVES AND FIRE HYDRANTS ARE NOT ALLOWED IN CURBS, GUTTER PANS, OR SIDEWALKS.
6. ALL PRIVATE WATERLINES SHALL BE C900 PVC UNLESS OTHERWISE SPECIFIED.
7. CONTRACTOR SHALL RAISE VALVES, HYDRANTS, AND OTHER APPURTENANCES TO FINISHED GRADE UPON COMPLETION OF PAVING.
8. ALL FIRE SERVICE PIPE FITTINGS AND APPURTENANCES SHALL COMPLY WITH NFPA 24.
9. ALL WATER MAINS SHALL HAVE 4 FOOT MINIMUM COVER FROM FINISHED GRADE.
10. CONTRACTOR SHALL PROVIDE A MINIMUM 1.5' CLEARANCE BETWEEN PIPES AT WATER AND STORM SEWER CROSSINGS.
11. UNDERGROUND MAINS FEEDING NFPA 13 SPRINKLER SYSTEMS MUST BE INSTALLED AND TESTED IN ACCORDANCE WITH NFPA 13, AND THE FIRE CODE, BY A LICENSED SPRINKLER CONTRACTOR WITH A PLUMBING PERMIT. THE ENTIRE MAIN MUST BE HYDROSTATICALLY TESTED AT ONE TIME, UNLESS ISOLATION VALVES ARE PROVIDED BETWEEN TESTED SECTIONS.
12. UNDERGROUND MAINS FEEDING PRIVATE HYDRANTS MUST BE INSTALLED AN TESTED IN ACCORDANCE WITH NFPA 24, AND THE PERMIT. THE ENTIRE MAIN MUST BE HYDROSTATICALLY TESTED AT ONE TIME, UNLESS ISOLATION VALVES ARE PROVIDED BETWEEN TESTED SECTIONS.
13. ALL WATER LINE TO BE C900 DR 14 PVC 305 PSI. UNLESS NOTED OTHERWISE
14. ALL FIRE HYDRANTS ON SITE TO BE PRIVATE.
15. WATER METER MUST BE AMI COMPATIBLE AND TO BE ORDERED WITH A 25 FOOT NICOR.

PRIVATE FIRE HYDRANTS

UNDERGROUND MAINS FEEDING THE PROPOSED NINE (9) PRIVATE FIRE HYDRANTS MUST BE INSTALLED AND TESTED IN ACCORDANCE WITH NFPAG 24, AND THE FIRE CODE BY A LICENSED CONTRACTOR WITH A PLUMBING PERMIT. THE ENTIRE MAIN MUST BE HYDROSTATICALLY TESTED AT ONE TIME UNLESS ISOLATION VALVES ARE PROVIDED IN BETWEEN TESTED SECTIONS.

* ALL WATER SYMBOLS ARE NOT TO SCALE AND ARE ONLY SHOWN FOR ILLUSTRATION PURPOSES.
* ALL WASTEWATER SYMBOLS ARE NOT TO SCALE, AND ARE ONLY SHOWN FOR ILLUSTRATION PURPOSES. REFER TO DETAILS SHOWN IN THIS PLAN SET.

WATER PRESSURE AT HIGHEST & LOWEST BUILDING

	Tower Level at 143.3	Tower Level (Low) at 120.65
Highest FFE Building #7	59.94 psi	50.94 psi
Lowest FFE Building #5	67.09 psi	58.09 psi

LEGEND

- PROPERTY BOUNDARY
- PROPOSED RIGHT OF WAY
- EXISTING MAJOR CONTOUR
- EXISTING MINOR CONTOUR
- FIRE HYDRANT ASSEMBLY
- GATE VALVE
- CAP
- FIRE DEPARTMENT CONNECTION
- WASTEWATER LINE
- WASTEWATER MANHOLE
- DIRECTION OF FLOW
- CLEANOUT

N

0 15' 30' 60'
SCALE: 1" = 30'

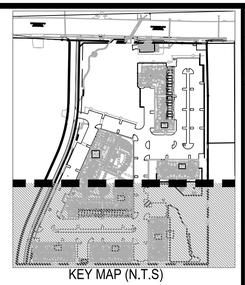

KEY MAP (N.T.S)

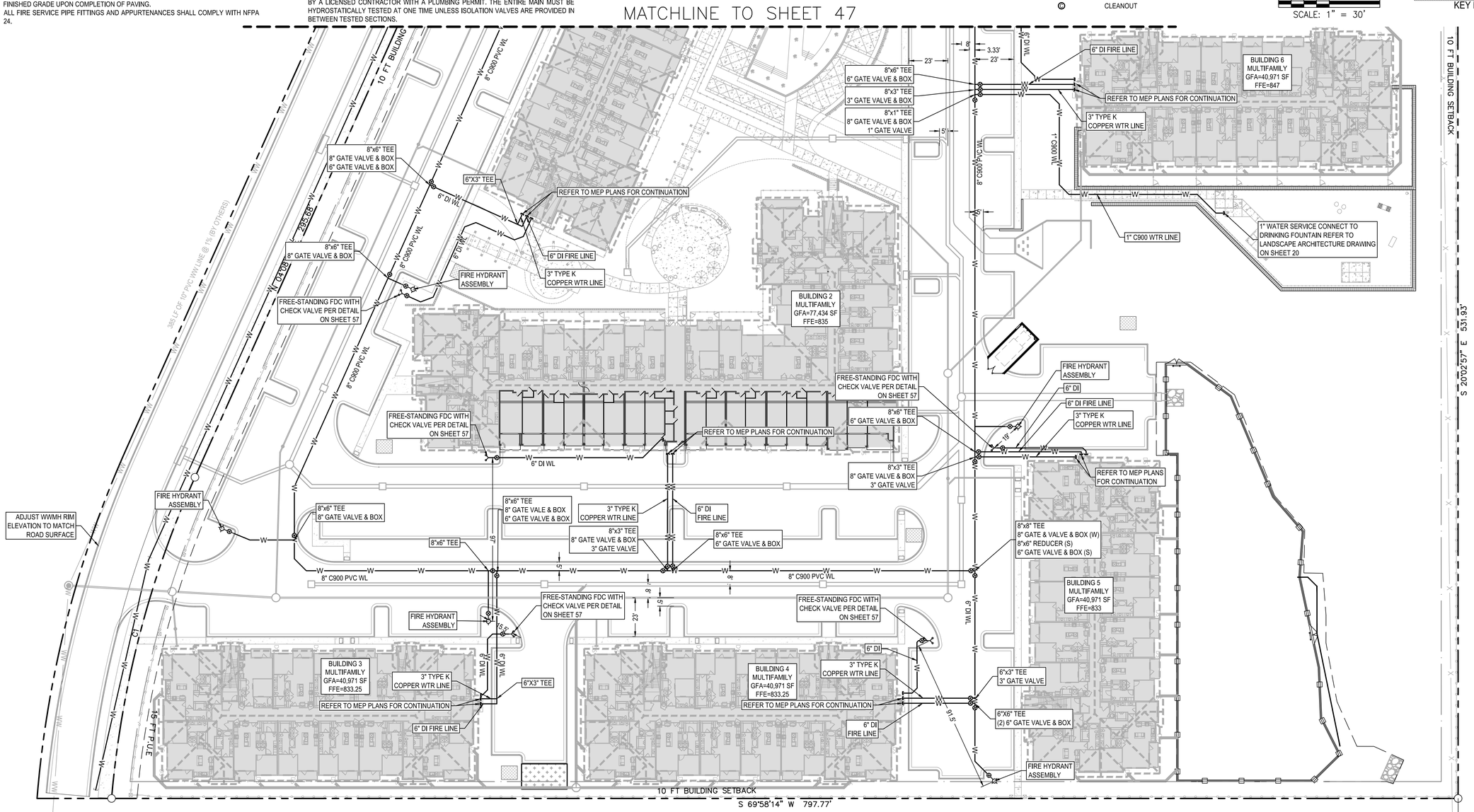

ADDRESS: 500 WESTINGHOUSE ROAD

REV	DESCRIPTION	DATE	APR

DESIGNED BY: JG
REVIEWED BY: BG
DRAWN BY: JG

BGE
BROWN & GAY ENGINEERS, INC.
1701 DIRECTORS BLVD, SUITE 1000
AUSTIN, TX 78731
TBPE Registration No. F-1046
TEL: 512-879-0400 www.brownjay.com

500 WESTINGHOUSE ROAD

ASCEND WESTINGHOUSE
GEORGETOWN, TEXAS

WATER DISTRIBUTION PLAN (2 OF 2)

STATE OF TEXAS
BRIAN J. GRACE
121846
LICENSED PROFESSIONAL ENGINEER
5/29/2020

2020-41-SDP

G:\TXC\Projects\DHI_Communities\7616-00-Westinghouse\LD\01_CADD\01_Shts\02_Site Plan\7616-C-SP-UTILITY LAYOUT.dwg Layout: WATER PLAN (2 OF 2) Plotted: 9/21/2020 9:49:29 AM

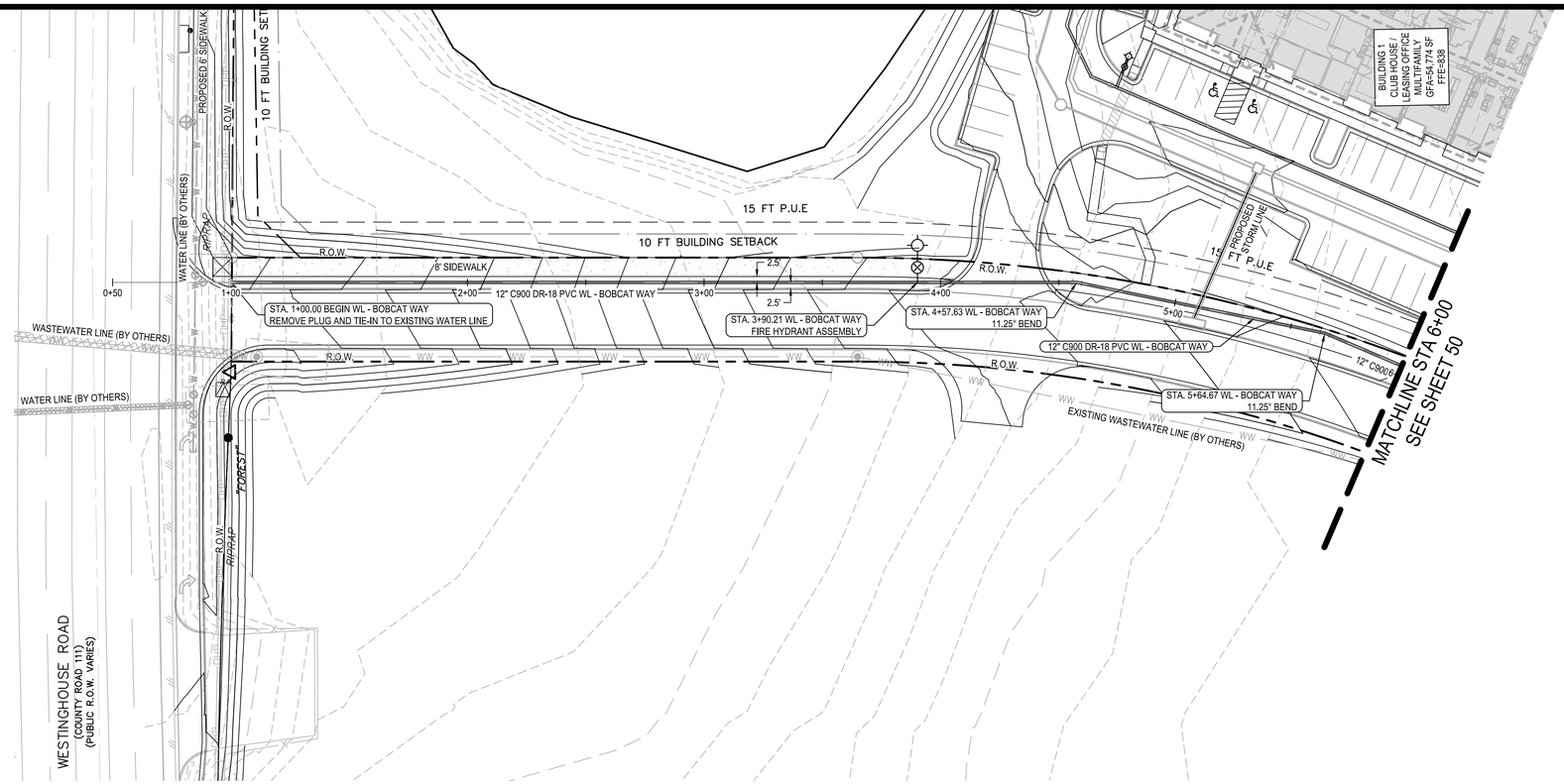

0 15' 30' 60'
SCALE: 1" = 30'

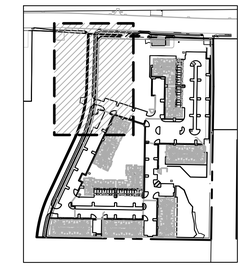

KEY MAP (N.T.S)

LEGEND

- PROPERTY BOUNDARY
- EXISTING MAJOR CONTOUR
- EXISTING MINOR CONTOUR
- FIRE HYDRANT ASSEMBLY
- GATE VALVE
- CAP
- WATER METER
- DOUBLE WATER SERVICE
- SINGLE WATER SERVICE
- DOUBLE WASTEWATER SERVICE
- SINGLE WASTEWATER SERVICE

* ALL WATER SYMBOLS ARE NOT TO SCALE AND ARE ONLY SHOWN FOR ILLUSTRATION PURPOSES.

PROFILE LEGEND

- FINISHED GRADE
- SUBGRADE
- EXISTING GRADE
- PROPOSED WATER LINE
- FIRE HYDRANT
- GATE VALVE
- WATER METER
- ARV — AIR RELEASE VALVE
- WATER CAP

* ALL WATER SYMBOLS ARE NOT TO SCALE AND ARE ONLY SHOWN FOR ILLUSTRATION PURPOSES.

NOTES:

1. ALL FIRE HYDRANT LEADS SHALL BE DUCTILE IRON.
2. GATE VALVES SHALL BE MECHANICALLY RESTRAINED OR BOLTED TO TEE.
3. ALL WATERLINE FITTINGS SHALL BE MECHANICALLY RESTRAINED AND THRUST BLOCKED.
4. ALL WATER LINES ARE TO BE BACTERIA TESTED BY THE CONTRACTOR ACCORDING TO THE CITY STANDARDS AND SPECIFICATIONS.
5. WATER AND WASTEWATER MAIN CROSSINGS SHALL MEET ALL REQUIREMENTS OF THE TCEQ AND THE CITY.
6. WATERLINES SHALL BE CONSTRUCTED TO RUN ON TOP OF WASTEWATER LINES AT CROSSINGS WITH A MIN. OF 6 INCHES IN CLEARANCE FROM PIPE O.D. TO PIPE O.D. WHEN THE WASTEWATER MAIN IS PRESSURE RATED TO 150 PSI MINIMUM. THIS INCLUDES SERVICE LINES.
7. ALL WATERLINES CROSSING WASTEWATER LINES SHALL HAVE ONE SEGMENT OF PIPE CENTERED AND PERPENDICULAR TO THE WASTEWATER LINE OR LATERAL. THE CROSSING SHALL BE CENTERED BETWEEN THE JOINTS OF THE NEW LINE OR LATERAL.
8. ALL WASTEWATER PIPE CROSSING BELOW WATERLINES WITHIN 9 FEET SHALL HAVE ONE 20-FOOT LINK OF 160-PSI ASTM D2241 PRESSURE RATED PIPE CENTERED AT THE CROSSING.
9. CONTRACTOR TO MAINTAIN MIN. 5 FOOT CLEARANCE BETWEEN UTILITY POLES AND WATER LINE OUTER EDGE TO OUTER EDGE.
10. VALVES ON STUBS NOT CONNECTING TO EXISTING LINES SHALL BE CLOSED AND LOCKING CAP INSTALLED. STUBS REQUIRE JOINT RESTRAINT FULL LENGTH.
11. FOR AREAS WHERE WATERLINE WILL BE UNDER FUTURE PAVED AREAS, CONTRACTOR SHALL BACKFILL TRENCHES IN ACCORDANCE WITH THE APPLICABLE CITY OF GEORGETOWN SPECIFICATION SECTIONS AND PROVIDE ASSOCIATED SOIL BACKFILL TESTING. INCREASED COMPACTION EFFORTS APPLY TO THESE AREAS.

811 Know what's below. Call before you dig.

THE LOCATION OF EXISTING UNDERGROUND UTILITIES ARE SHOWN IN AN APPROXIMATE WAY ONLY. THE CONTRACTOR SHALL DETERMINE THE EXACT LOCATION OF ALL EXISTING UTILITIES BEFORE COMMENCING WORK. HE AGREES TO BE FULLY RESPONSIBLE FOR ANY AND ALL DAMAGES WHICH MIGHT BE OCCASIONED BY HIS FAILURE TO EXACTLY LOCATE AND PRESERVE ANY AND ALL UNDERGROUND UTILITIES.

ADDRESS: 500 WESTINGHOUSE ROAD

WL - BOBCAT WAY

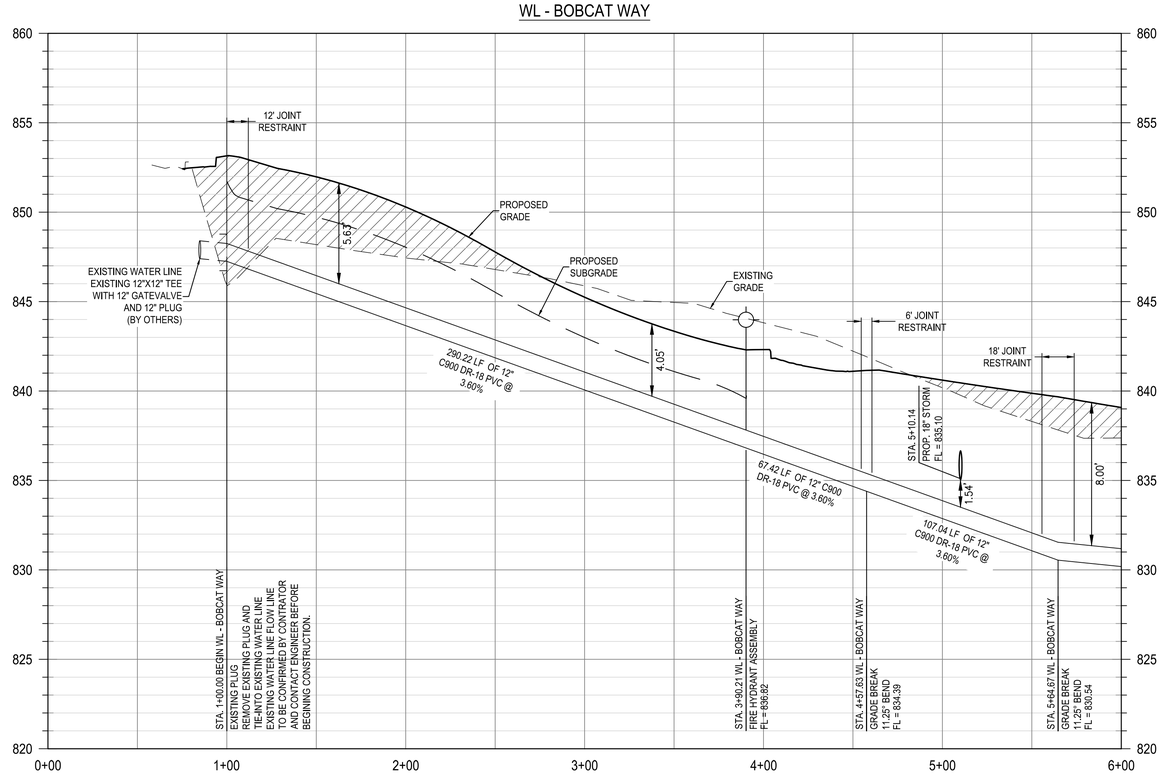

HORIZONTAL
0 20' 40' 80'
SCALE: 1" = 40'

VERTICAL
0 2' 4' 8'
SCALE: 1" = 4'
(FULL SIZE)

REV	DESCRIPTION	DATE	APR

DESIGNED BY: JG
REVIEWED BY: BG
DRAWN BY: JG

BGE
BROWN & GAY ENGINEERS, INC.
1701 DIRECTORS BLVD, SUITE 1000
AUSTIN, TX 78731
TBPE Registration No. F-1046
TEL: 512-879-0400 www.brownjay.com

ASCEND WESTINGHOUSE
GEORGETOWN, TEXAS

WATER LINE PLAN AND PROFILE
BEGIN TO 6+00

STATE OF TEXAS
BRIAN J. GRACE
121846
LICENSED PROFESSIONAL ENGINEER
9/28/2020

SHEET
49 OF 76

500 WESTINGHOUSE ROAD
2020-41-SDP

G:\TXC\Projects\DHI_Communities\7616-00-Westinghouse\LD\01_CADD\01_Shts\02_Site Plan\7616-C-SP-WATR.dwg Layout: WATER BOBCAT 1 Plotted: 9/28/2020 4:15:31 PM

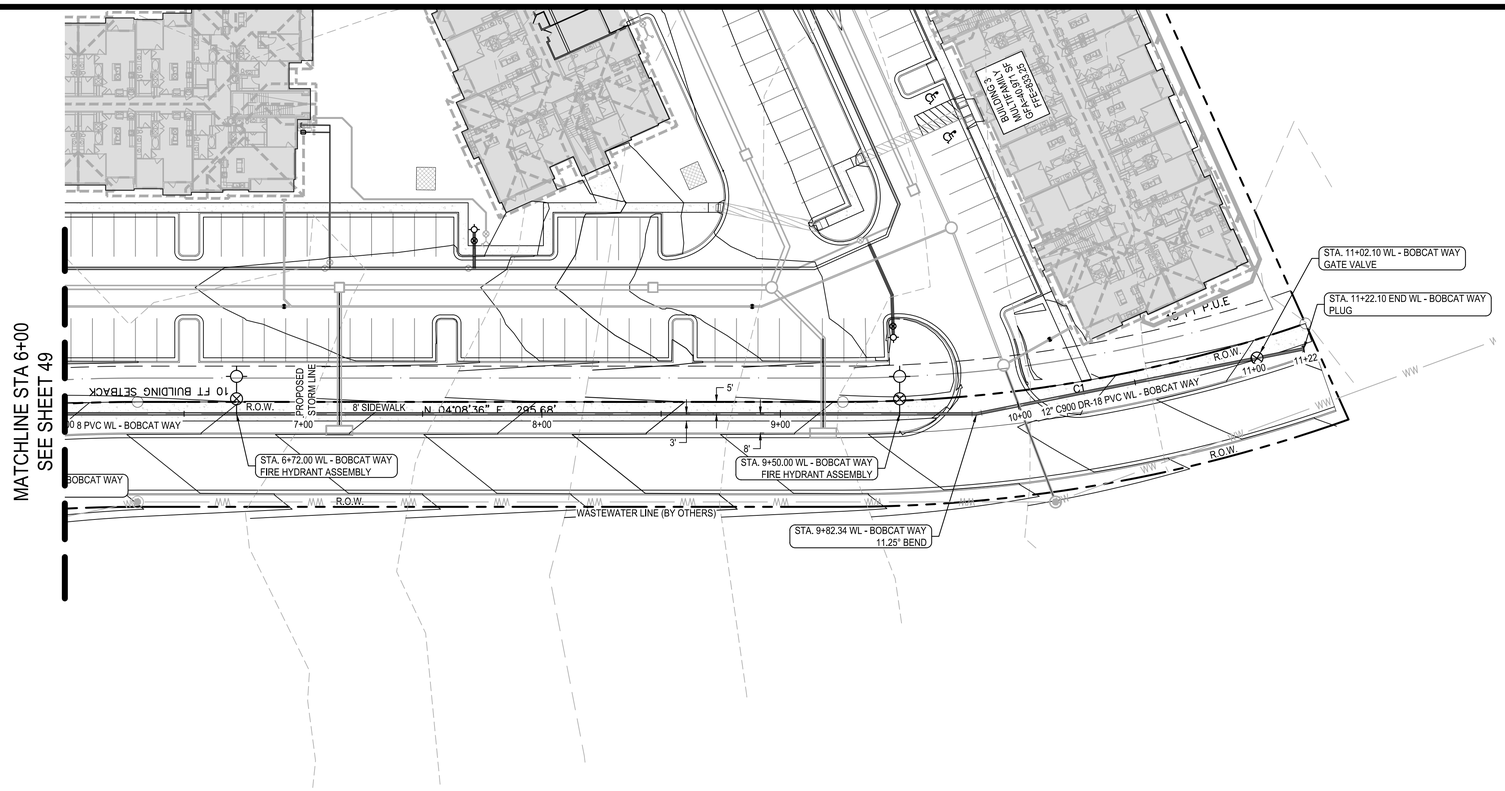

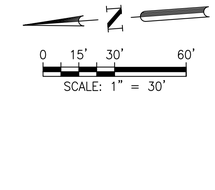

KEY MAP (N.T.S)

0 15' 30' 60'
SCALE: 1" = 30'

LEGEND

- PROPERTY BOUNDARY
- EXISTING MAJOR CONTOUR
- EXISTING MINOR CONTOUR
- FIRE HYDRANT ASSEMBLY
- GATE VALVE
- CAP
- WATER METER
- DOUBLE WATER SERVICE
- SINGLE WATER SERVICE
- DOUBLE WASTEWATER SERVICE
- SINGLE WASTEWATER SERVICE

* ALL WATER SYMBOLS ARE NOT TO SCALE AND ARE ONLY SHOWN FOR ILLUSTRATION PURPOSES.

PROFILE LEGEND

- FINISHED GRADE
- SUBGRADE
- EXISTING GRADE
- PROPOSED WATER LINE
- FIRE HYDRANT
- GATE VALVE
- WATER METER
- ARV — AIR RELEASE VALVE
- WATER CAP

* ALL WATER SYMBOLS ARE NOT TO SCALE AND ARE ONLY SHOWN FOR ILLUSTRATION PURPOSES.

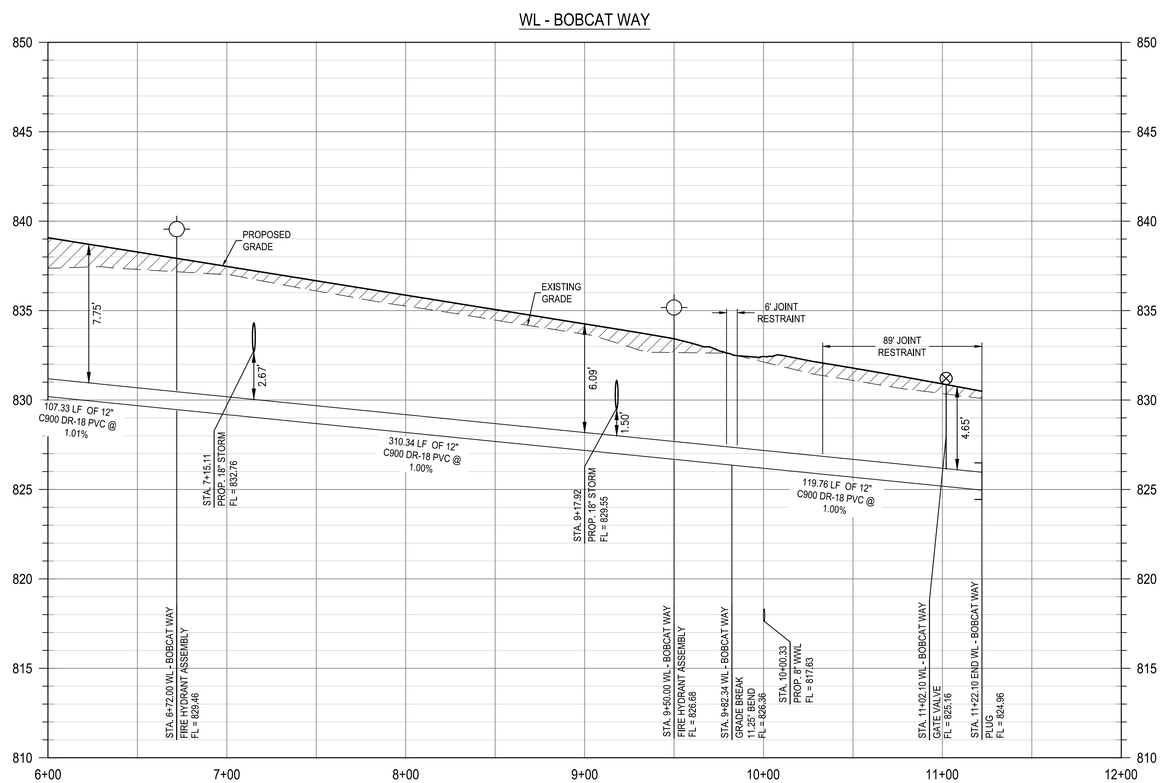

HORIZONTAL
0 20' 40' 80'
SCALE: 1" = 40'

VERTICAL
0 2' 4' 8'
SCALE: 1" = 4'
(FULL SIZE)

NOTES:

1. ALL FIRE HYDRANT LEADS SHALL BE DUCTILE IRON.
2. GATE VALVES SHALL BE MECHANICALLY RESTRAINED OR BOLTED TO TEE.
3. ALL WATERLINE FITTINGS SHALL BE MECHANICALLY RESTRAINED AND THRUST BLOCKED.
4. ALL WATER LINES ARE TO BE BACTERIA TESTED BY THE CONTRACTOR ACCORDING TO THE CITY STANDARDS AND SPECIFICATIONS.
5. WATER AND WASTEWATER MAIN CROSSINGS SHALL MEET ALL REQUIREMENTS OF THE TCEQ AND THE CITY.
6. WATERLINES SHALL BE CONSTRUCTED TO RUN ON TOP OF WASTEWATER LINES AT CROSSINGS WITH A MIN. OF 6 INCHES IN CLEARANCE FROM PIPE O.D. TO PIPE O.D. WHEN THE WASTEWATER MAIN IS PRESSURE RATED TO 150 PSI MINIMUM. THIS INCLUDES SERVICE LINES.
7. ALL WATERLINES CROSSING WASTEWATER LINES SHALL HAVE ONE SEGMENT OF PIPE CENTERED AND PERPENDICULAR TO THE WASTEWATER LINE OR LATERAL. THE CROSSING SHALL BE CENTERED BETWEEN THE JOINTS OF THE NEW LINE OR LATERAL.
8. ALL WASTEWATER PIPE CROSSING BELOW WATERLINES WITHIN 9 FEET SHALL HAVE ONE 20-FOOT LINK OF 160-PSI ASTM D2241 PRESSURE RATED PIPE CENTERED AT THE CROSSING.
9. CONTRACTOR TO MAINTAIN MIN. 5 FOOT CLEARANCE BETWEEN UTILITY POLES AND WATER LINE OUTER EDGE TO OUTER EDGE.
10. VALVES ON STUBS NOT CONNECTING TO EXISTING LINES SHALL BE CLOSED AND LOCKING CAP INSTALLED. STUBS REQUIRE JOINT RESTRAINT FULL LENGTH.
11. FOR AREAS WHERE WATERLINE WILL BE UNDER FUTURE PAVED AREAS, CONTRACTOR SHALL BACKFILL TRENCHES IN ACCORDANCE WITH THE APPLICABLE CITY OF GEORGETOWN SPECIFICATION SECTIONS AND PROVIDE ASSOCIATED SOIL BACKFILL TESTING. INCREASED COMPACTION EFFORTS APPLY TO THESE AREAS.

811 Know what's below. Call before you dig.

THE LOCATION OF EXISTING UNDERGROUND UTILITIES ARE SHOWN IN AN APPROXIMATE WAY ONLY. THE CONTRACTOR SHALL DETERMINE THE EXACT LOCATION OF ALL EXISTING UTILITIES BEFORE COMMENCING WORK. HE AGREES TO BE FULLY RESPONSIBLE FOR ANY AND ALL DAMAGES WHICH MIGHT BE OCCASIONED BY HIS FAILURE TO EXACTLY LOCATE AND PRESERVE ANY AND ALL UNDERGROUND UTILITIES.

ADDRESS: 500 WESTINGHOUSE ROAD

REV	DESCRIPTION	DATE	APR

DESIGNED BY: JG
REVIEWED BY: BG
DRAWN BY: JG

BGE
BROWN & GAY ENGINEERS, INC.
1701 DIRECTORS BLVD, SUITE 1000
AUSTIN, TX 78731
TBPE Registration No. F-1046
TEL: 512-879-0400 www.brownjgay.com

ASCEND WESTINGHOUSE
GEORGETOWN, TEXAS

WATER LINE PLAN AND PROFILE 6+00 TO END

STATE OF TEXAS
BRIAN J. GRACE
121846
LICENSED PROFESSIONAL ENGINEER
9/28/2020

SHEET
50 OF 76

500 WESTINGHOUSE ROAD
2020-41-SDP

G:\TXC\Projects\DHI_Communities\7616-00-Westinghouse\LD\01_CADD\01_Shts\02_Site Plan\7616-C-SP-WATR.dwg Layout: WATER BOBCAT 2 Plotted: 9/28/2020 4:15:44 PM

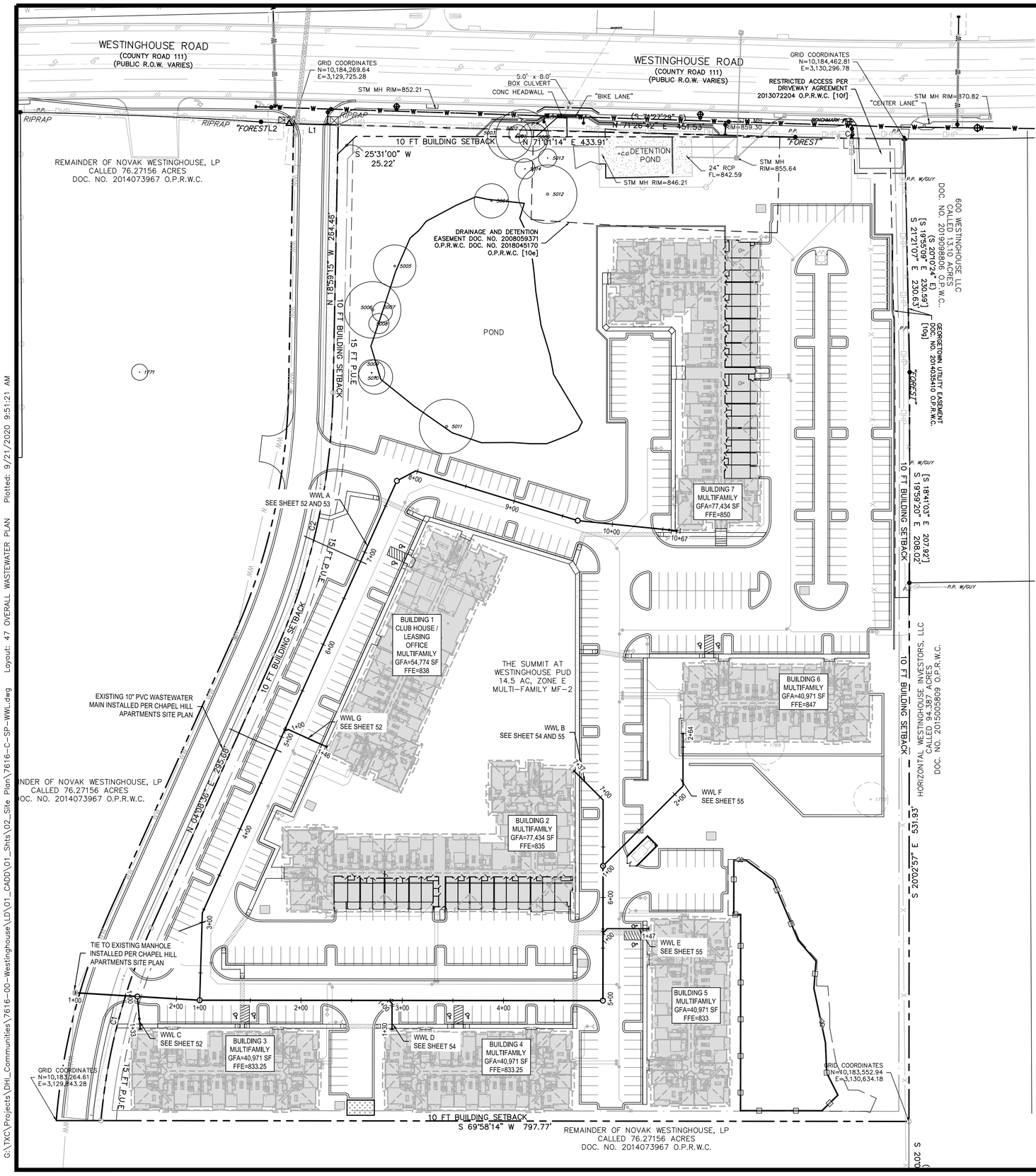

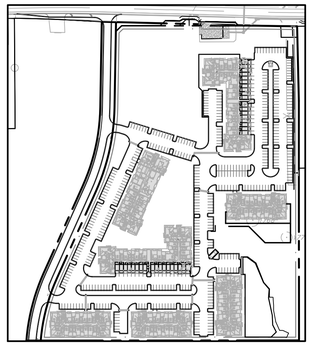

KEY MAP (N.T.S)

N

0 25' 50' 100'

SCALE: 1" = 50'

PLAN LEGEND

- PROPERTY BOUNDARY
- PROPOSED WASTEWATER LINE
- PROPOSED WASTEWATER MANHOLE
- DIRECTION OF FLOW
- CLEANOUT

PROFILE LEGEND

- FINISHED GRADE
- EXISTING GROUND
- PROPOSED WASTEWATER LINE

* ALL WASTEWATER SYMBOLS ARE NOT TO SCALE, AND ARE ONLY SHOWN FOR ILLUSTRATION PURPOSES. REFER TO DETAILS SHOWN IN THIS PLAN SET.

NOTE:

1. MANHOLES LOCATED OUTSIDE OF PAVEMENT SHALL HAVE BOLTED AND GASKETED COVERS WITH RIM ELEVATIONS 6" MIN. ABOVE FINISHED GRADE.
2. CONTRACTOR SHALL FIELD LOCATE AND VERIFY THE HORIZONTAL AND VERTICAL LOCATION OF ALL EXISTING UTILITIES PRIOR TO CONSTRUCTION.
3. WATER AND WASTEWATER SERVICE TO BE PROVIDED BY GEORGETOWN UTILITY SYSTEMS.
4. CONTRACTOR TO INSTALL WASTEWATER LINES UP TO 5' FROM BUILDING. COORDINATE WITH MEP PLANS AT BUILDING CONNECTION POINTS.
5. ALL WASTEWATER INFRASTRUCTURE IS PRIVATELY OWNED AND MAINTAINED UNLESS OTHERWISE NOTED.
6. ALL MANHOLES IN UNPAVED AREA SHALL HAVE BOLTED WATERTIGHT LIDS.
7. ALL CLEANOUTS IN PAVED AREAS SHALL HAVE TRAFFIC RATED LID AND FRAME.
8. CONTRACTOR AND/ OR CONTRACTOR'S INDEPENDENTLY RETAINED EMPLOYEE OR STRUCTURAL DESIGN/ GEOTECHNICAL/ SAFETY/ EQUIPMENT CONSULTANT, IF ANY, SHALL REVIEW THESE PLANS AND ANY AVAILABLE GEOTECHNICAL INFORMATION AND THE ANTICIPATED INSTALLATION SITES WITHIN THE PROJECT WORK AREA IN ORDER TO IMPLEMENT CONTRACTOR'S TRENCH EXCAVATION SAFETY PROTECTION SYSTEMS, PROGRAMS AND/ OR PROCEDURES FOR THE PROJECT DESCRIBED IN THE CONTRACT DOCUMENTS. THE CONTRACTOR'S IMPLEMENTATION OF THESE SYSTEMS, PROGRAMS, AND/OR PROCEDURES SHALL COMPLY WITH AS A MINIMUM, OSHA STANDARDS FOR TRENCH EXCAVATIONS. SPECIFICALLY, CONTRACTOR AND/OR CONTRACTOR'S INDEPENDENTLY RETAINED EMPLOYEE OR SAFETY CONSULTANT SHALL IMPLEMENT A TRENCH SAFETY PROGRAM IN ACCORDANCE WITH OSHA STANDARDS GOVERNING THE PRESENCE AND ACTIVITIES OF INDIVIDUALS WORKING IN AND AROUND TRENCH EXCAVATION.

ADDRESS: 500 WESTINGHOUSE ROAD

DFU COUNT

BLDG	DFU
1	500
2	605
3	477
4	477
5	477
6	477
7	605

811 Know what's below. Call before you dig.

THE LOCATION OF EXISTING UNDERGROUND UTILITIES ARE SHOWN IN AN APPROXIMATE WAY ONLY. THE CONTRACTOR SHALL DETERMINE THE EXACT LOCATION OF ALL EXISTING UTILITIES BEFORE COMMENCING WORK. HE AGREES TO BE FULLY RESPONSIBLE FOR ANY AND ALL DAMAGES WHICH MIGHT BE OCCASIONED BY HIS FAILURE TO EXACTLY LOCATE ADN PRESERVE ANY AND ALL UNDERGROUND UTILITIES.

REV	DESCRIPTION	DATE	APR

DESIGNED BY: JG

REVIEWED BY: BG

DRAWN BY: JG

BGE
BROWN & GAY ENGINEERS, INC.
1701 DIRECTORS BLVD, SUITE 1000
AUSTIN, TX 78731
TBPE Registration No. F-1046
TEL: 512-879-0400 www.brownjgay.com

ASCEND WESTINGHOUSE
GEORGETOWN, TEXAS

OVERALL WASTEWATER PLAN

STATE OF TEXAS
BRIAN J. GRACE
121846
LICENSED
PROFESSIONAL ENGINEER
9/21/2020

SHEET
51 OF 76

500 WESTINGHOUSE ROAD

2020-41-SDP

G:\TXC\Projects\DHI_Communities\7616-00-Westinghouse\LD\01_CADD\01_Shts\02_Site Plan\7616-C-SP-WWL.dwg Layout: 47 OVERALL WASTEWATER PLAN Plotted: 9/21/2020 9:51:21 AM

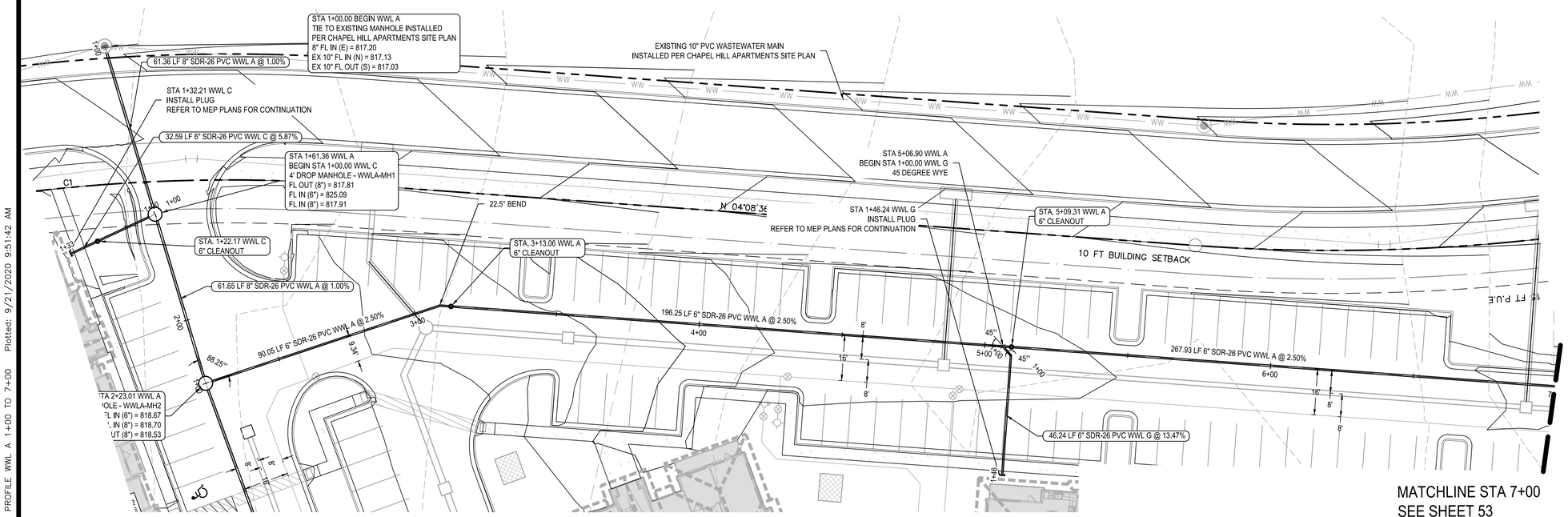

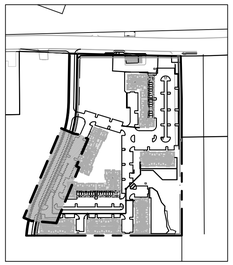

KEY MAP (N.T.S)

0 10' 20' 40'

HORIZ. SCALE: 1" = 20'
VERT. SCALE 1" = 4'

PLAN LEGEND

- PROPERTY BOUNDARY
- PROPOSED WASTEWATER LINE
- PROPOSED WASTEWATER MANHOLE
- DIRECTION OF FLOW
- CLEANOUT

PROFILE LEGEND

- FINISHED GRADE
- EXISTING GROUND
- PROPOSED WASTEWATER LINE

* ALL WASTEWATER SYMBOLS ARE NOT TO SCALE, AND ARE ONLY SHOWN FOR ILLUSTRATION PURPOSES. REFER TO DETAILS SHOWN IN THIS PLAN SET.

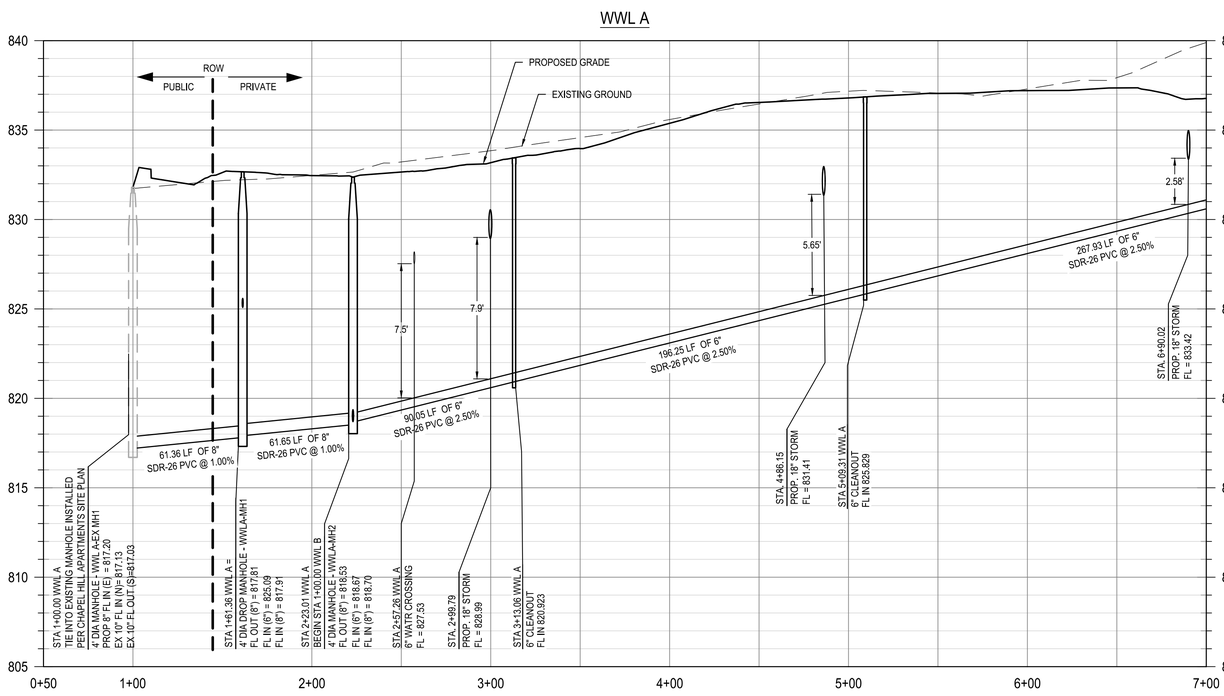

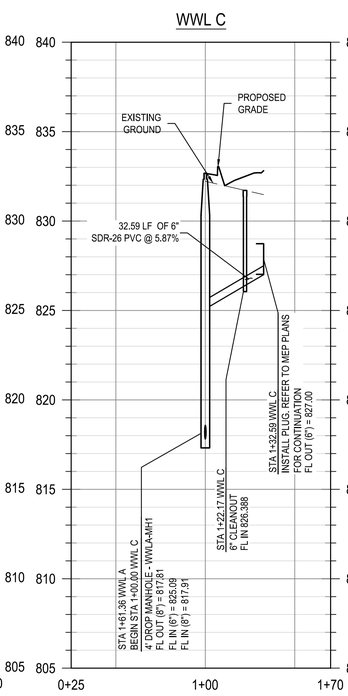

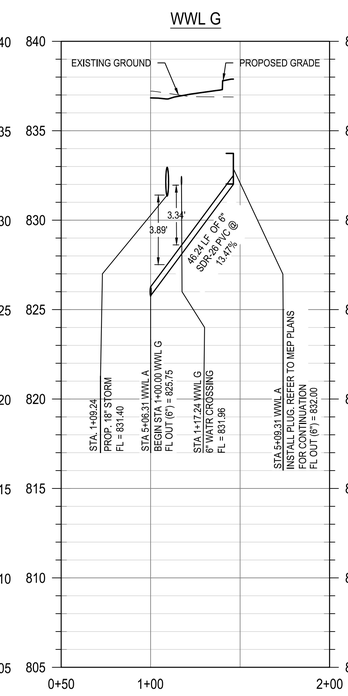

NOTE:

1. MANHOLES LOCATED OUTSIDE OF PAVEMENT SHALL HAVE BOLTED AND GASKETED COVERS WITH RIM ELEVATIONS 6" MIN. ABOVE FINISHED GRADE.
2. CONTRACTOR SHALL FIELD LOCATE AND VERIFY THE HORIZONTAL AND VERTICAL LOCATION OF ALL EXISTING UTILITIES PRIOR TO CONSTRUCTION.
3. WATER AND WASTEWATER SERVICE TO BE PROVIDED BY GEORGETOWN UTILITY SYSTEMS.
4. CONTRACTOR TO INSTALL WASTEWATER LINES UP TO 5' FROM BUILDING. COORDINATE WITH MEP PLANS AT BUILDING CONNECTION POINTS.
5. ALL WASTEWATER INFRASTRUCTURE IS PRIVATELY OWNED AND MAINTAINED UNLESS OTHERWISE NOTED.
6. ALL MANHOLES IN UNPAVED AREA SHALL HAVE BOLTED WATERTIGHT LIDS.
7. ALL CLEANOUTS IN PAVED AREAS SHALL HAVE TRAFFIC RATED LID AND FRAME.
8. CONTRACTOR AND/ OR CONTRACTOR'S INDEPENDENTLY RETAINED EMPLOYEE OR STRUCTURAL DESIGN/ GEOTECHNICAL/ SAFETY EQUIPMENT CONSULTANT, IF ANY, SHALL REVIEW THESE PLANS AND ANY AVAILABLE GEOTECHNICAL INFORMATION AND THE ANTICIPATED INSTALLATION SITES WITHIN THE PROJECT WORK AREA IN ORDER TO IMPLEMENT CONTRACTOR'S TRENCH EXCAVATION SAFETY PROTECTION SYSTEMS, PROGRAMS AND/ OR PROCEDURES FOR THE PROJECT DESCRIBED IN THE CONTRACT DOCUMENTS. THE CONTRACTOR'S IMPLEMENTATION OF THESE SYSTEMS, PROGRAMS, AND/OR PROCEDURES SHALL COMPLY WITH AS A MINIMUM, OSHA STANDARDS FOR TRENCH EXCAVATIONS, SPECIFICALLY, CONTRACTOR AND/OR CONTRACTOR'S INDEPENDENTLY RETAINED EMPLOYEE OR SAFETY CONSULTANT SHALL IMPLEMENT A TRENCH SAFETY PROGRAM IN ACCORDANCE WITH OSHA STANDARDS GOVERNING THE PRESENCE AND ACTIVITIES OF INDIVIDUALS WORKING IN AND AROUND TRENCH EXCAVATION.

ADDRESS: 500 WESTINGHOUSE ROAD

Know what's below. Call before you dig.

THE LOCATION OF EXISTING UNDERGROUND UTILITIES ARE SHOWN IN AN APPROXIMATE WAY ONLY. THE CONTRACTOR SHALL DETERMINE THE EXACT LOCATION OF ALL EXISTING UTILITIES BEFORE COMMENCING WORK. HE AGREES TO BE FULLY RESPONSIBLE FOR ANY AND ALL DAMAGES WHICH MIGHT BE OCCASIONED BY HIS FAILURE TO EXACTLY LOCATE ADN PRESERVE ANY AND ALL UNDERGROUND UTILITIES.

REV	DESCRIPTION	DATE	APR

DESIGNED BY: JG
REVIEWED BY: BG
DRAWN BY: JG

BROWN & GAY ENGINEERS, INC.
AUSTIN, TX 78731
1701 DIRECTORS BLVD, SUITE 1000
TBPE Registration No. F-1046
TEL: 512-879-0400 www.browngay.com

500 WESTINGHOUSE ROAD

ASCEND WESTINGHOUSE
GEORGETOWN, TEXAS

WASTEWATER PLAN AND PROFILE WWL A 1+00 TO 7+00

STATE OF TEXAS
BRIAN J. GRACE
121846
LICENSED PROFESSIONAL ENGINEER
9/21/2020

2020-41-SDP

G:\TXC\Projects\DHI_Communities\7616-00-Westinghouse\LD\01_CADD\01_Shts\02_Site Plan\7616-C-SP-WWL.dwg Layout: 48 WASTEWATER PLAN AND PROFILE WWL A 1+00 TO 7+00 Plotted: 9/21/2020 9:51:42 AM

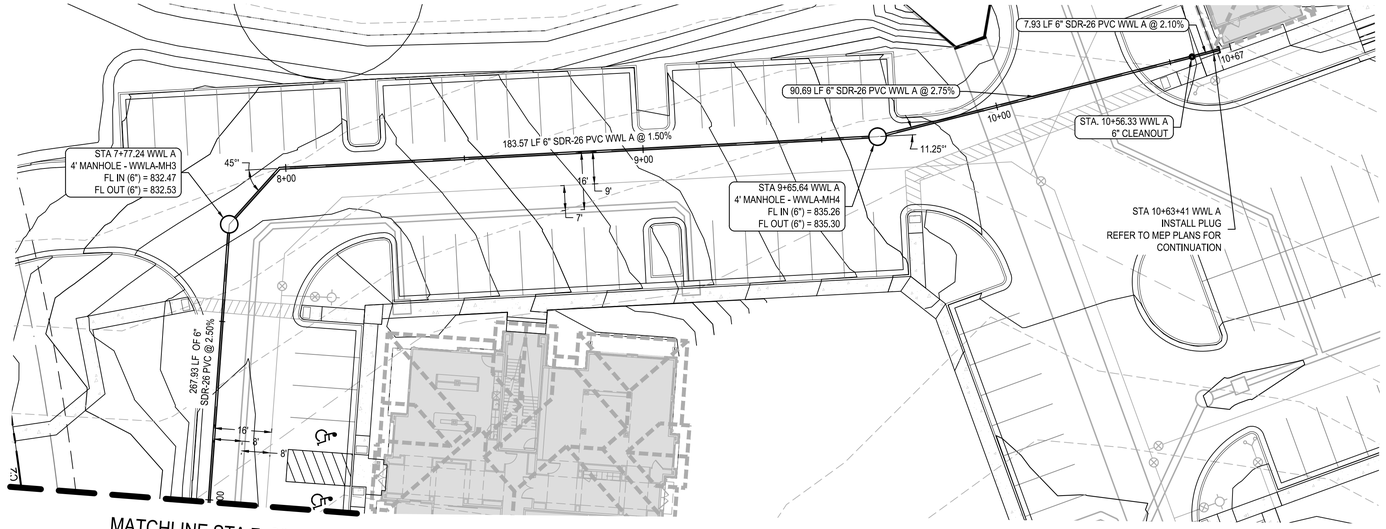

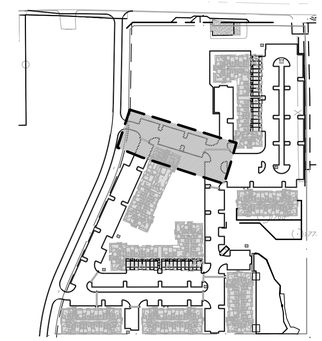

KEY MAP (N.T.S)

N

0 10' 20' 40'

HORIZ. SCALE: 1" = 20'
VERT. SCALE 1" = 4'

WWL A

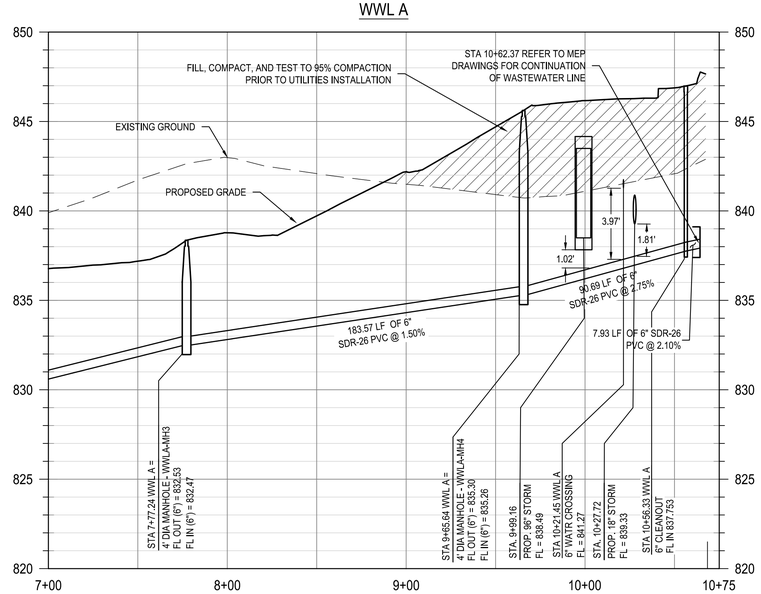

PLAN LEGEND

- PROPERTY BOUNDARY
- PROPOSED WASTEWATER LINE
- PROPOSED WASTEWATER MANHOLE
- DIRECTION OF FLOW
- CLEANOUT

PROFILE LEGEND

- FINISHED GRADE
- EXISTING GROUND
- PROPOSED WASTEWATER LINE

* ALL WASTEWATER SYMBOLS ARE NOT TO SCALE, AND ARE ONLY SHOWN FOR ILLUSTRATION PURPOSES. REFER TO DETAILS SHOWN IN THIS PLAN SET.

NOTE:

1. MANHOLES LOCATED OUTSIDE OF PAVEMENT SHALL HAVE BOLTED AND GASKETED COVERS WITH RIM ELEVATIONS 6" MIN. ABOVE FINISHED GRADE.
2. CONTRACTOR SHALL FIELD LOCATE AND VERIFY THE HORIZONTAL AND VERTICAL LOCATION OF ALL EXISTING UTILITIES PRIOR TO CONSTRUCTION.
3. WATER AND WASTEWATER SERVICE TO BE PROVIDED BY GEORGETOWN UTILITY SYSTEMS.
4. CONTRACTOR TO INSTALL WASTEWATER LINES UP TO 5' FROM BUILDING. COORDINATE WITH MEP PLANS AT BUILDING CONNECTION POINTS.
5. ALL WASTEWATER INFRASTRUCTURE IS PRIVATELY OWNED AND MAINTAINED UNLESS OTHERWISE NOTED.
6. ALL MANHOLES IN UNPAVED AREA SHALL HAVE BOLTED WATERTIGHT LIDS.
7. ALL CLEANOUTS IN PAVED AREAS SHALL HAVE TRAFFIC RATED LID AND FRAME.
8. CONTRACTOR AND/ OR CONTRACTOR'S INDEPENDENTLY RETAINED EMPLOYEE OR STRUCTURAL DESIGN/ GEOTECHNICAL/ SAFETY/ EQUIPMENT CONSULTANT, IF ANY, SHALL REVIEW THESE PLANS AND ANY AVAILABLE GEOTECHNICAL INFORMATION AND THE ANTICIPATED INSTALLATION SITES WITHIN THE PROJECT WORK AREA IN ORDER TO IMPLEMENT CONTRACTOR'S TRENCH EXCAVATION SAFETY PROTECTION SYSTEMS, PROGRAMS AND/ OR PROCEDURES FOR THE PROJECT DESCRIBED IN THE CONTRACT DOCUMENTS. THE CONTRACTOR'S IMPLEMENTATION OF THESE SYSTEMS, PROGRAMS, AND/OR PROCEDURES SHALL COMPLY WITH AS A MINIMUM, OSHA STANDARDS FOR TRENCH EXCAVATIONS, SPECIFICALLY, CONTRACTOR AND/OR CONTRACTOR'S INDEPENDENTLY RETAINED EMPLOYEE OR SAFETY CONSULTANT SHALL IMPLEMENT A TRENCH SAFETY PROGRAM IN ACCORDANCE WITH OSHA STANDARDS GOVERNING THE PRESENCE AND ACTIVITIES OF INDIVIDUALS WORKING IN AND AROUND TRENCH EXCAVATION.

ADDRESS: 500 WESTINGHOUSE ROAD

Know what's below. Call before you dig.

THE LOCATION OF EXISTING UNDERGROUND UTILITIES ARE SHOWN IN AN APPROXIMATE WAY ONLY. THE CONTRACTOR SHALL DETERMINE THE EXACT LOCATION OF ALL EXISTING UTILITIES BEFORE COMMENCING WORK. HE AGREES TO BE FULLY RESPONSIBLE FOR ANY AND ALL DAMAGES WHICH MIGHT BE OCCASIONED BY HIS FAILURE TO EXACTLY LOCATE ADN PRESERVE ANY AND ALL UNDERGROUND UTILITIES.

REV	DESCRIPTION	DATE	APR

DESIGNED BY: JG
REVIEWED BY: BG
DRAWN BY: JG

BGE
BROWN & GAY ENGINEERS, INC.
1701 DIRECTORS BLVD, SUITE 1000
AUSTIN, TX 78731
TBPE Registration No. F-1046
TEL: 512-879-0400 www.brownggy.com

500 WESTINGHOUSE ROAD

ASCEND WESTINGHOUSE
GEORGETOWN, TEXAS

WASTEWATER PLAN AND PROFILE WWL A 7+00 TO END

STATE OF TEXAS
BRIAN J. GRACE
121846
LICENSED
PROFESSIONAL ENGINEER
9/21/2020

2020-41-SDP

SHEET
53 OF 76

G:\TXC\Projects\DHI_Communities\7616-00-Westinghouse\LD\01_CADD\01_Shts\02_Site Plan\7616-C-SP-WWL.dwg Layout: 49 WASTEWATER PLAN AND PROFILE WWL A 7+00 TO END Plotted: 9/21/2020 9:51:56 AM

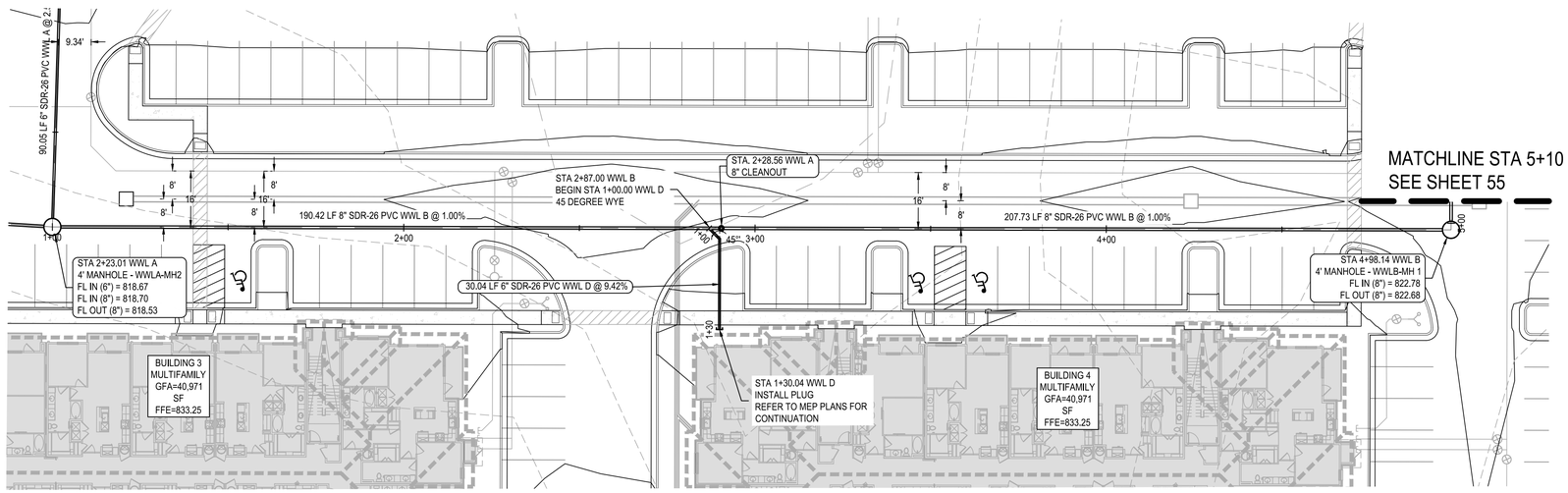

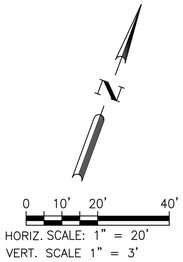

PLAN LEGEND

- PROPERTY BOUNDARY
- PROPOSED WASTEWATER LINE
- PROPOSED WASTEWATER MANHOLE
- DIRECTION OF FLOW
- CLEANOUT

PROFILE LEGEND

- FINISHED GRADE
- EXISTING GROUND
- PROPOSED WASTEWATER LINE

* ALL WASTEWATER SYMBOLS ARE NOT TO SCALE, AND ARE ONLY SHOWN FOR ILLUSTRATION PURPOSES. REFER TO DETAILS SHOWN IN THIS PLAN SET.

NOTE:

1. MANHOLES LOCATED OUTSIDE OF PAVEMENT SHALL HAVE BOLTED AND GASKETED COVERS WITH RIM ELEVATIONS 6" MIN. ABOVE FINISHED GRADE.
2. CONTRACTOR SHALL FIELD LOCATE AND VERIFY THE HORIZONTAL AND VERTICAL LOCATION OF ALL EXISTING UTILITIES PRIOR TO CONSTRUCTION.
3. WATER AND WASTEWATER SERVICE TO BE PROVIDED BY GEORGETOWN UTILITY SYSTEMS.
4. CONTRACTOR TO INSTALL WASTEWATER LINES UP TO 5' FROM BUILDING. COORDINATE WITH MEP PLANS AT BUILDING CONNECTION POINTS.
5. ALL WASTEWATER INFRASTRUCTURE IS PRIVATELY OWNED AND MAINTAINED UNLESS OTHERWISE NOTED.
6. ALL MANHOLES IN UNPAVED AREA SHALL HAVE BOLTED WATERTIGHT LIDS.
7. ALL CLEANOUTS IN PAVED AREAS SHALL HAVE TRAFFIC RATED LID AND FRAME.
8. CONTRACTOR AND/ OR CONTRACTOR'S INDEPENDENTLY RETAINED EMPLOYEE OR STRUCTURAL DESIGN/ GEOTECHNICAL/ SAFETY/ EQUIPMENT CONSULTANT, IF ANY, SHALL REVIEW THESE PLANS AND ANY AVAILABLE GEOTECHNICAL INFORMATION AND THE ANTICIPATED INSTALLATION SITES WITHIN THE PROJECT WORK AREA IN ORDER TO IMPLEMENT CONTRACTOR'S TRENCH EXCAVATION SAFETY PROTECTION SYSTEMS, PROGRAMS AND/ OR PROCEDURES FOR THE PROJECT DESCRIBED IN THE CONTRACT DOCUMENTS. THE CONTRACTOR'S IMPLEMENTATION OF THESE SYSTEMS, PROGRAMS, AND/OR PROCEDURES SHALL COMPLY WITH AS A MINIMUM, OSHA STANDARDS FOR TRENCH EXCAVATIONS, SPECIFICALLY, CONTRACTOR AND/OR CONTRACTOR'S INDEPENDENTLY RETAINED EMPLOYEE OR SAFETY CONSULTANT SHALL IMPLEMENT A TRENCH SAFETY PROGRAM IN ACCORDANCE WITH OSHA STANDARDS GOVERNING THE PRESENCE AND ACTIVITIES OF INDIVIDUALS WORKING IN AND AROUND TRENCH EXCAVATION.

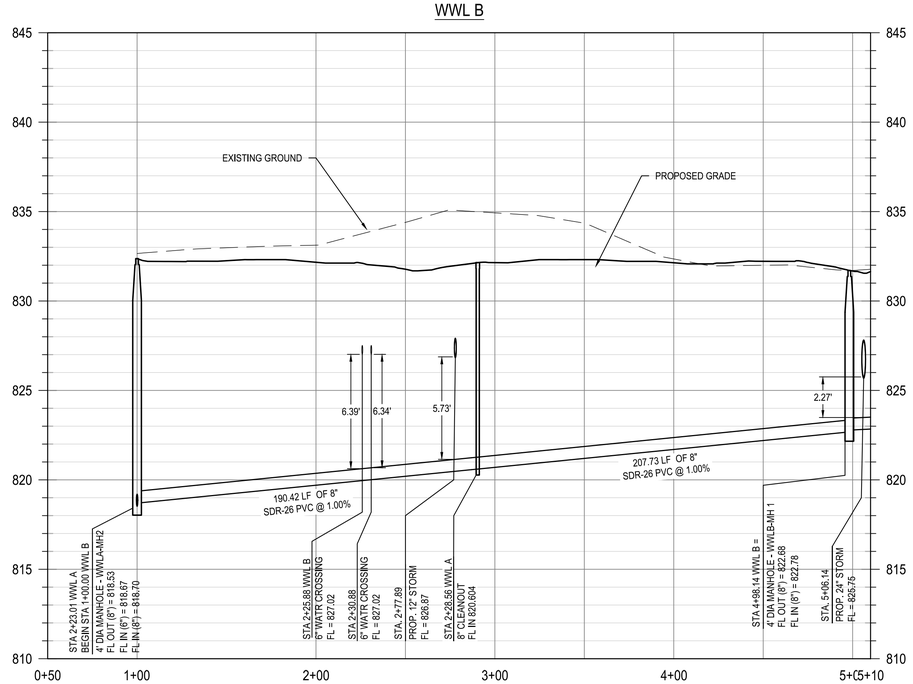

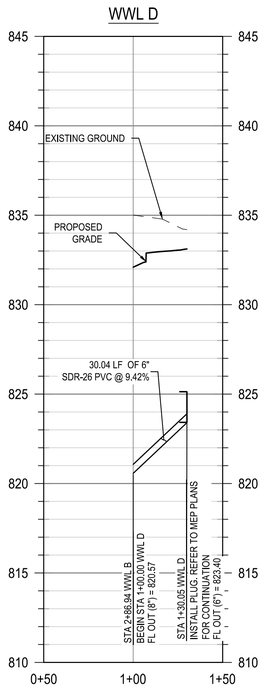

811 Know what's below. Call before you dig.

THE LOCATION OF EXISTING UNDERGROUND UTILITIES ARE SHOWN IN AN APPROXIMATE WAY ONLY. THE CONTRACTOR SHALL DETERMINE THE EXACT LOCATION OF ALL EXISTING UTILITIES BEFORE COMMENCING WORK. HE AGREES TO BE FULLY RESPONSIBLE FOR ANY AND ALL DAMAGES WHICH MIGHT BE OCCASIONED BY HIS FAILURE TO EXACTLY LOCATE ADN PRESERVE ANY AND ALL UNDERGROUND UTILITIES.

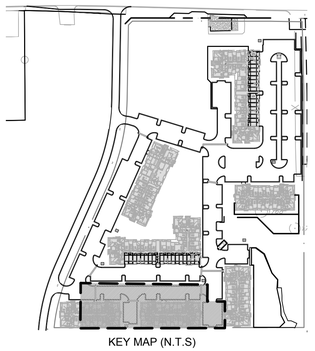

KEY MAP (N.T.S)

ADDRESS: 500 WESTINGHOUSE ROAD

REV	DESCRIPTION	DATE	APR

DESIGNED BY: JG

REVIEWED BY: BG

DRAWN BY: JG

BGE
BROWN & GAY ENGINEERS, INC.
1701 DIRECTORS BLVD, SUITE 1000
AUSTIN, TX 78731
TBPE Registration No. F-1046
TEL: 512-879-0400 www.brownjgay.com

ASCEND WESTINGHOUSE GEORGETOWN, TEXAS

WASTEWATER PLAN AND PROFILE WWL B 1+00 TO 5+00

STATE OF TEXAS
BRIAN J. GRACE
121846
LICENSED PROFESSIONAL ENGINEER
9/21/2020

2020-41-SDP

500 WESTINGHOUSE ROAD

G:\TXC\Projects\DHI_Communities\7616-00-Westinghouse\LD\01_CADD\01_Shts\02_Site Plan\7616-C-SP-WWL.dwg Layout: 50 WASTEWATER PLAN AND PROFILE WWL B 1+00 TO 5+00 Plotted: 9/21/2020 9:52:11 AM

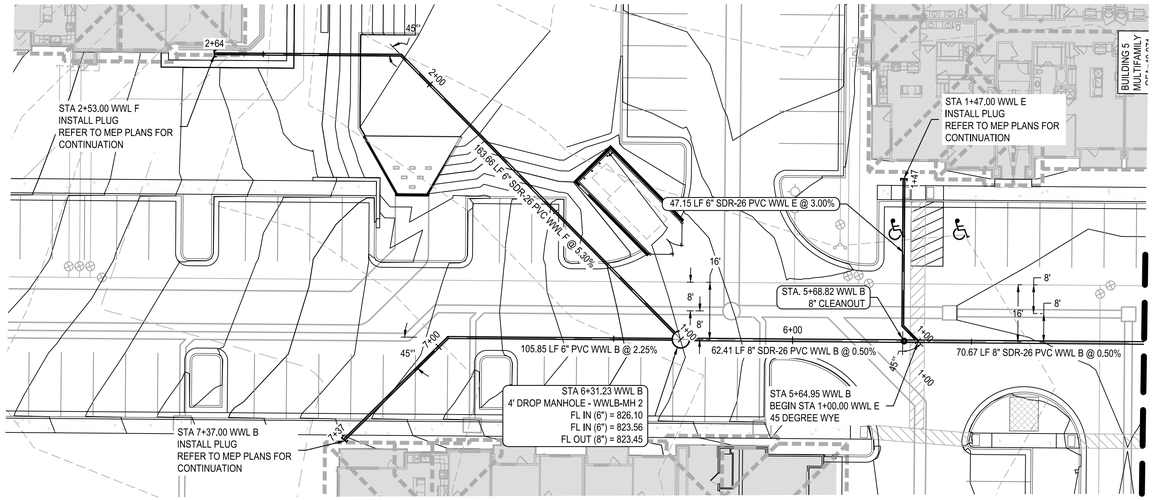

MATCHLINE STA 5+10
SEE SHEET 54

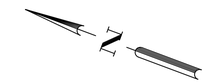

0 10' 20' 40'
HORIZ. SCALE: 1" = 20'
VERT. SCALE 1" = 4'

PLAN LEGEND

- PROPERTY BOUNDARY
- PROPOSED WASTEWATER LINE
- PROPOSED WASTEWATER MANHOLE
- DIRECTION OF FLOW
- CLEANOUT

PROFILE LEGEND

- FINISHED GRADE
- EXISTING GROUND
- PROPOSED WASTEWATER LINE

* ALL WASTEWATER SYMBOLS ARE NOT TO SCALE, AND ARE ONLY SHOWN FOR ILLUSTRATION PURPOSES. REFER TO DETAILS SHOWN IN THIS PLAN SET.

NOTE:

1. MANHOLES LOCATED OUTSIDE OF PAVEMENT SHALL HAVE BOLTED AND GASKETED COVERS WITH RIM ELEVATIONS 6" MIN. ABOVE FINISHED GRADE.
2. CONTRACTOR SHALL FIELD LOCATE AND VERIFY THE HORIZONTAL AND VERTICAL LOCATION OF ALL EXISTING UTILITIES PRIOR TO CONSTRUCTION.
3. WATER AND WASTEWATER SERVICE TO BE PROVIDED BY GEORGETOWN UTILITY SYSTEMS.
4. CONTRACTOR TO INSTALL WASTEWATER LINES UP TO 5' FROM BUILDING. COORDINATE WITH MEP PLANS AT BUILDING CONNECTION POINTS.
5. ALL WASTEWATER INFRASTRUCTURE IS PRIVATELY OWNED AND MAINTAINED UNLESS OTHERWISE NOTED.
6. ALL MANHOLES IN UNPAVED AREA SHALL HAVE BOLTED WATERTIGHT LIDS.
7. ALL CLEANOUTS IN PAVED AREAS SHALL HAVE TRAFFIC RATED LID AND FRAME.
8. CONTRACTOR AND/ OR CONTRACTOR'S INDEPENDENTLY RETAINED EMPLOYEE OR STRUCTURAL DESIGN/ GEOTECHNICAL/ SAFETY/ EQUIPMENT CONSULTANT, IF ANY, SHALL REVIEW THESE PLANS AND ANY AVAILABLE GEOTECHNICAL INFORMATION AND THE ANTICIPATED INSTALLATION SITES WITHIN THE PROJECT WORK AREA IN ORDER TO IMPLEMENT CONTRACTOR'S TRENCH EXCAVATION SAFETY PROTECTION SYSTEMS, PROGRAMS AND/ OR PROCEDURES FOR THE PROJECT DESCRIBED IN THE CONTRACT DOCUMENTS. THE CONTRACTOR'S IMPLEMENTATION OF THESE SYSTEMS, PROGRAMS, AND/OR PROCEDURES SHALL COMPLY WITH AS A MINIMUM, OSHA STANDARDS FOR TRENCH EXCAVATIONS, SPECIFICALLY, CONTRACTOR AND/OR CONTRACTOR'S INDEPENDENTLY RETAINED EMPLOYEE OR SAFETY CONSULTANT SHALL IMPLEMENT A TRENCH SAFETY PROGRAM IN ACCORDANCE WITH OSHA STANDARDS GOVERNING THE PRESENCE AND ACTIVITIES OF INDIVIDUALS WORKING IN AND AROUND TRENCH EXCAVATION.

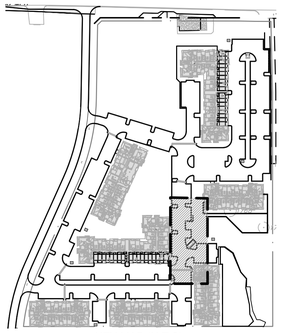

KEY MAP (N.T.S)

ADDRESS: 500 WESTINGHOUSE ROAD

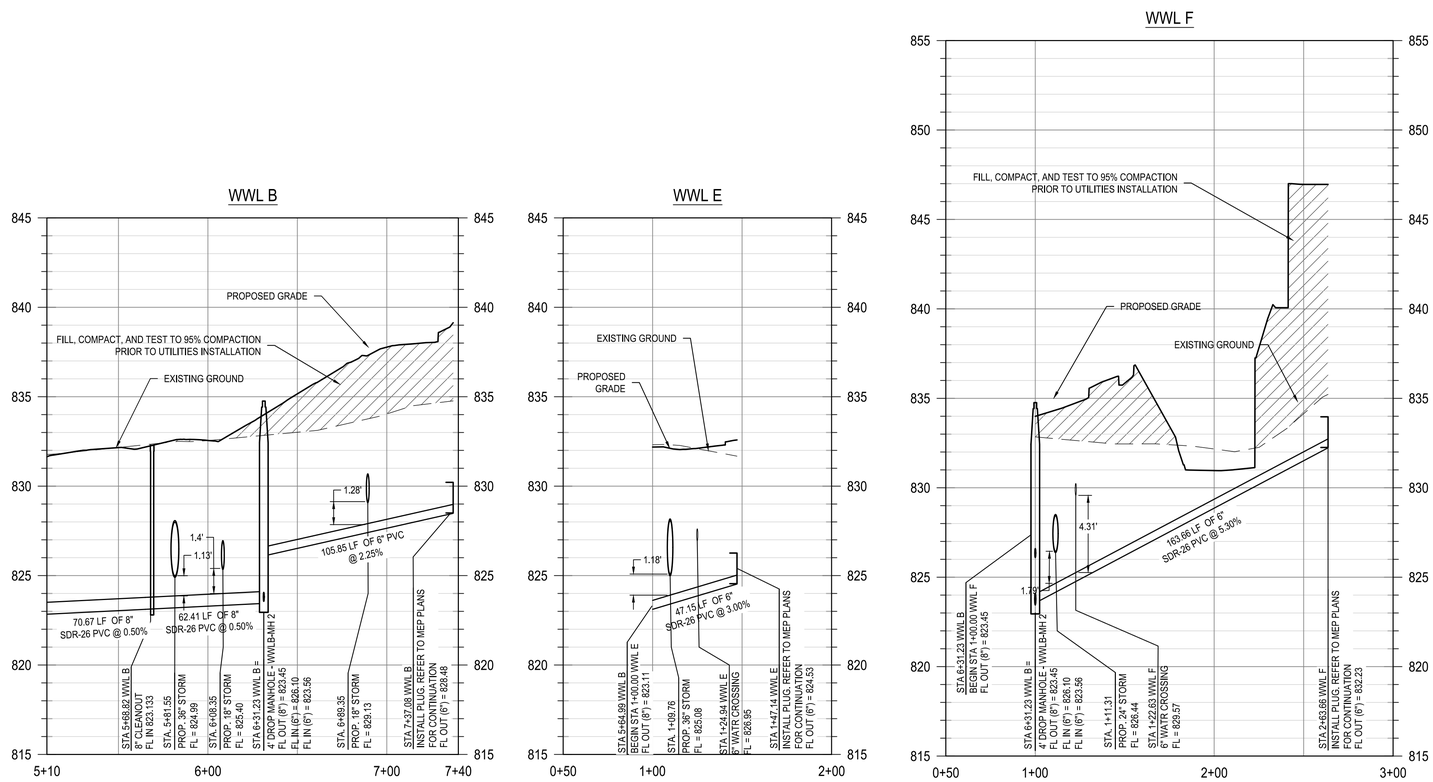

Know what's below. Call before you dig.

THE LOCATION OF EXISTING UNDERGROUND UTILITIES ARE SHOWN IN AN APPROXIMATE WAY ONLY. THE CONTRACTOR SHALL DETERMINE THE EXACT LOCATION OF ALL EXISTING UTILITIES BEFORE COMMENCING WORK. HE AGREES TO BE FULLY RESPONSIBLE FOR ANY AND ALL DAMAGES WHICH MIGHT BE OCCASIONED BY HIS FAILURE TO EXACTLY LOCATE ADN PRESERVE ANY AND ALL UNDERGROUND UTILITIES.

REV	DESCRIPTION	DATE	APR

DESIGNED BY: JG
REVIEWED BY: BG
DRAWN BY: JG

BGE
BROWN & GAY ENGINEERS, INC.
1701 DIRECTORS BLVD, SUITE 1000
AUSTIN, TX 78731
TBPE Registration No. F-1046
TEL: 512-879-0400 www.brownjgay.com

500 WESTINGHOUSE ROAD

ASCEND WESTINGHOUSE
GEORGETOWN, TEXAS

WASTEWATER PLAN AND PROFILE WWL B 5+00 TO END

STATE OF TEXAS
BRIAN J. GRACE
121846
LICENSED
PROFESSIONAL ENGINEER
9/21/2020

SHEET
55 OF 76

2020-41-SDP

G:\TXC\Projects\DHI_Communities\7616-00-Westinghouse\LD\01_CADD\01_Shts\02_Site Plan\7616-C-SP-WWL.dwg Layout: 51 WASTEWATER PLAN AND PROFILE WWL B 5+00 TO END Plotted: 9/21/2020 9:52:28 AM

G:\TXC\Projects\DHI_Communities\7616-00-Westinghouse\LD\01_CADD\01_Shts\02_Site Plan\7616-C-SP-DETL-UTILITY.dwg Layout: 52 UTILITY DETAILS (1 OF 2) Plotted: 9/21/2020 9:52:42 AM

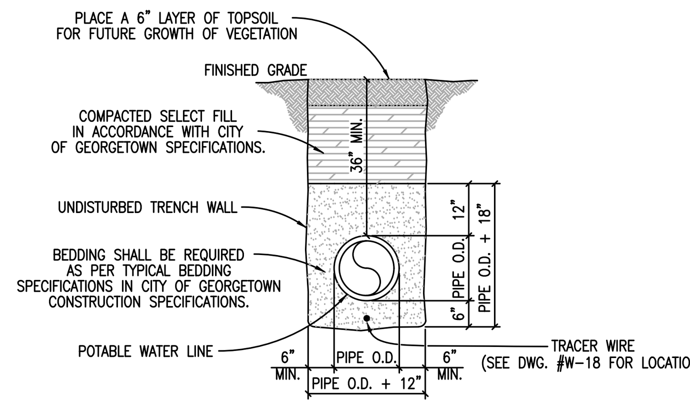

TRENCH WIDTHS
*PIPE LESS THAN 20" DIAMETER 1'-0" + PIPE O.D.
*20" DIAMETER PIPE AND LARGER 2'-0" + PIPE O.D.

The Architect/Engineer assumes responsibility for appropriate use of this standard.

ADOPTED 6/21/2006 — CITY OF GEORGETOWN CONSTRUCTION STANDARDS AND DETAILS — **TRENCH AND EMBEDMENT DETAIL UNDER NON-PAVED AREAS** — W02 — NTS — 1/2003 — MRS — TRB

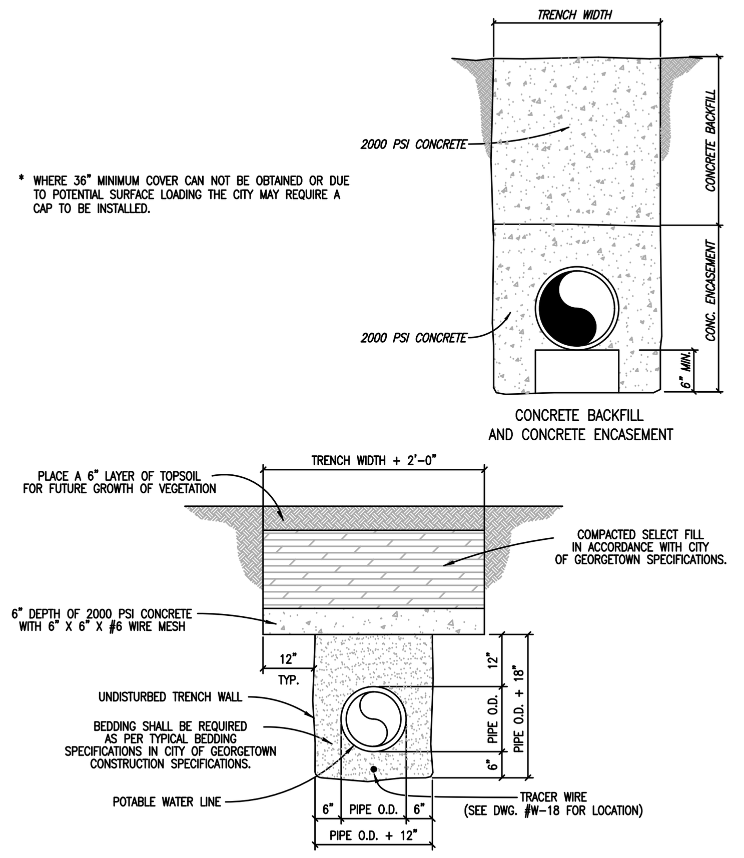

TRENCH WIDTHS
*PIPE LESS THAN 20" DIAMETER 1'-0" + PIPE O.D.
*20" DIAMETER PIPE AND LARGER 2'-0" + PIPE O.D.

The Architect/Engineer assumes responsibility for appropriate use of this standard.

ADOPTED 6/21/2006 — CITY OF GEORGETOWN CONSTRUCTION STANDARDS AND DETAILS — **CONCRETE TRENCH CAP DETAIL** — W02A — NTS — 1/2003 — MRS — TRB

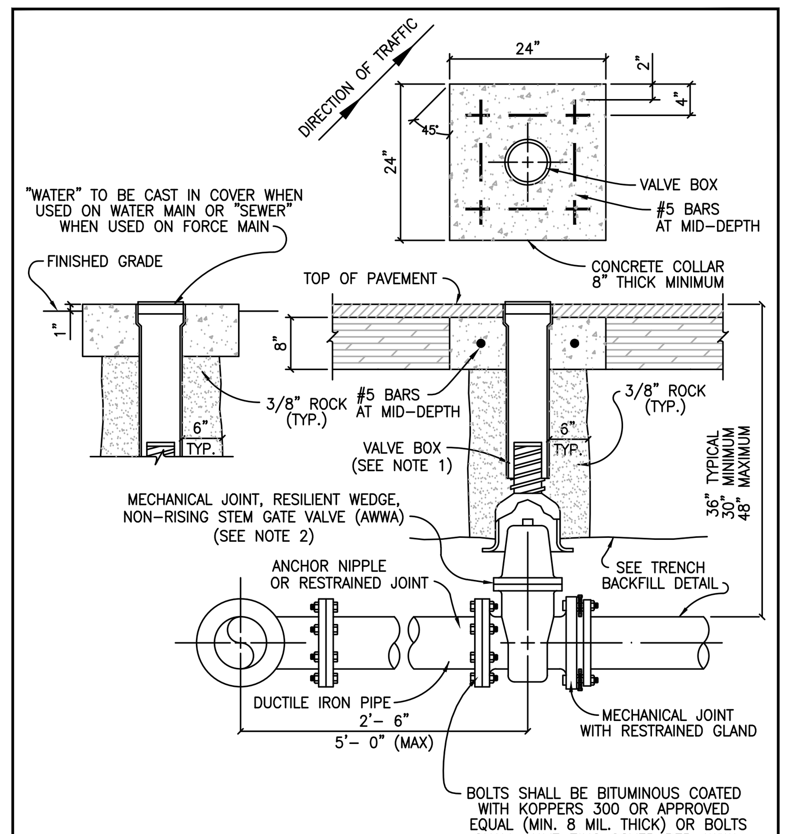

NOTES:
1. VALVE BOX SHALL BE 5 1/4" CAST IRON ADJUSTABLE HAVING AN ADJUSTABLE RANGE OF + OR – 6 INCHES FROM INSTALLED FINISH GRADE.
2. ACCEPTABLE GATE VALVES ARE:
   A. AMERICAN FLOW CONTROL – SERIES 2500
   B. MUELLER – 2360 SERIES
   C. CLOW

The Architect/Engineer assumes responsibility for appropriate use of this standard.

ADOPTED 6/21/2006 — CITY OF GEORGETOWN CONSTRUCTION STANDARDS AND DETAILS — **TYPICAL VALVE SETTING** — W07 — NTS — 1/2003 — MRS — TRB

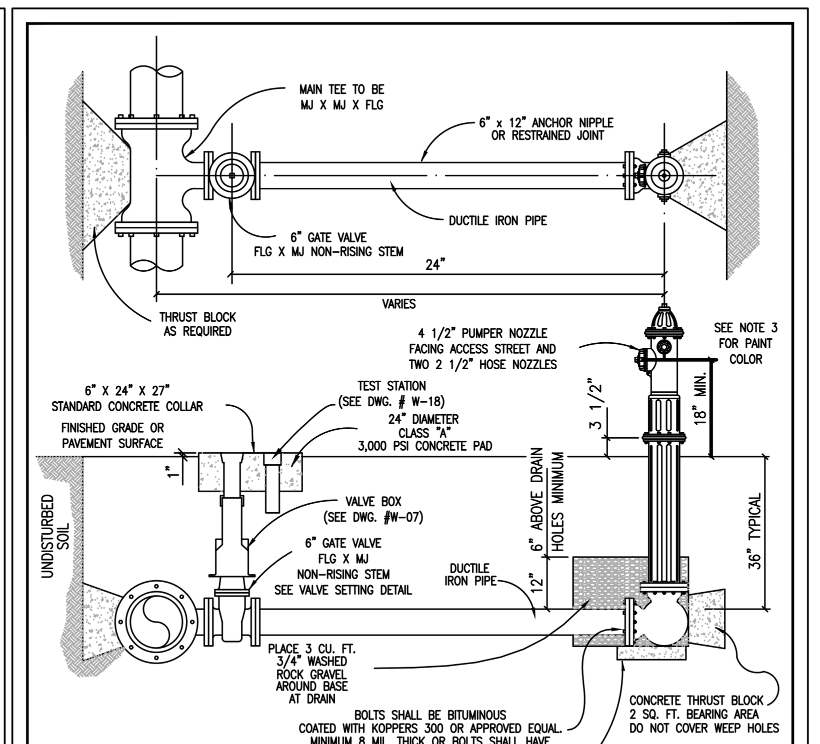

NOTES:
1. FIRE HYDRANT SHALL BE INSTALLED ON SAME SIDE OF ROAD AS WATER MAIN.
2. FIRE HYDRANT SHALL BE INSTALLED PLUMB AND TRUE.
3. ALL FIRE HYDRANT EXTERIORS SHALL BE FACTORY PRIMED AND PAINTED SILVER USING A HIGH GRADE ENAMEL.
4. HEEL AND THRUST BLOCKS TO REST IN UNDISTURBED SOIL.
5. THE ONLY FIRE HYDRANTS ACCEPTABLE ARE:
   A. KENNEDY – K81
   B. AMERICAN DARLING – B84B
   C. CLOW MEDALLION
6. DOUBLE BLUE REFLECTOR "HYE-LITES" BRAND, MANUFACTURED BY PAVEMENT MARKERS INC. TO BE INSTALLED AT CENTERLINE OF STREET PERPENDICULAR TO HYDRANT.
7. ALL METALLIC PIPES AND FITTINGS SHALL BE WRAPPED WITH 8 MILL. POLYETHELENE FILM.

The Architect/Engineer assumes responsibility for appropriate use of this standard.

ADOPTED 6/21/2006 — CITY OF GEORGETOWN CONSTRUCTION STANDARDS AND DETAILS — **TYPICAL FIRE HYDRANT INSTALLATION** — W10 — NTS — 1/2003 — MRS — TRB

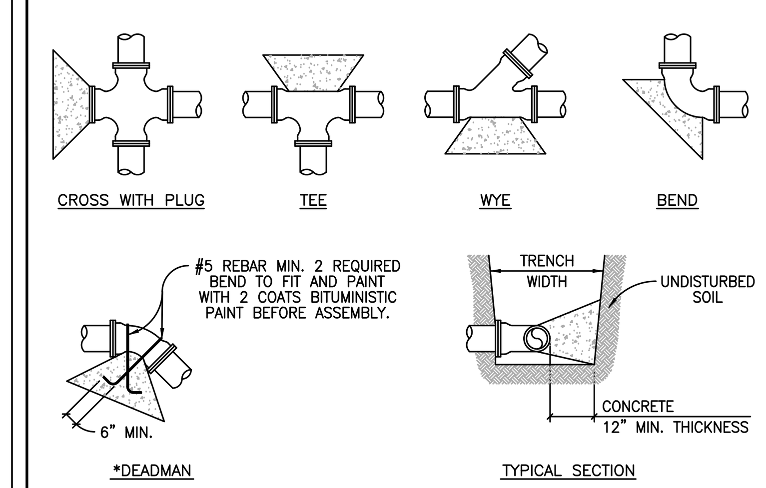

ALL THRUST BLOCKS SHALL BE FORMED. LAID FORMS SHALL BE INSPECTED BY THE CITY OF GEORGETOWN PRIOR TO THE POURING OF CONCRETE AND SHALL ALSO BE INSPECTED BY THE CITY OF GEORGETOWN PRIOR TO COVERING. TYPICAL LOCATIONS WHICH REQUIRE CONCRETE REACTION (THRUST) BLOCKS, FOR PRESSURE MAINS FOUR INCHES (4") AND GREATER. CONCRETE SHALL HAVE 2,500 P.S.I. MINIMUM STRENGTH AT TWENTY EIGHT (28) DAYS AND BEAR AGAINST UNDISTURBED STABLE SOILS, AREA OF CONTACT SHALL BE GOVERNED BY PIPE SIZE, MAXIMUM PRESSURE IN PIPE, AND BEARING CAPACITY OF SOIL. PROTECT FITTINGS, BOLTS, ETC. BY COVERING WITH VISQUEEN OR OTHER ACCEPTABLE MATERIAL. CONCRETE SHALL BE A MINIMUM OF TWELVE INCHES (12") THICK.

PIPE SIZE	THRUST BLOCK AREA REQUIRED	PIPE SIZE	THRUST BLOCK AREA REQUIRED	REMARKS
4"	2.0 SQ. FT.	18"	30.0 SQ. FT.	VALUES ARE FOR 90° BENDS, BASED ON 2000 P.S.F. SAFE BEARING LOAD AND PIPE PRESSURE OF 150 P.S.I. PLUS 33% SAFETY FACTOR FOR OTHER SOILS AND PRESSURES, THE AREA REQUIRED IS IN DIRECT PROPORTION.
6"	4.0 SQ. FT.	20"	37.0 SQ. FT.	
8"	6.6 SQ. FT.	24"	53.0 SQ. FT.	
10"	10.0 SQ. FT.	27"	80.0 SQ. FT.	
12"	14.0 SQ. FT.	30"	98.0 SQ. FT.	
14"	18.0 SQ. FT.	36"	127.0 SQ. FT.	
16"	24.0 SQ. FT.			

* THE ENGINEER OF RECORD SHALL CALCULATE THE SIZE OF THE DEADMAN REQUIRED AS WELL AS ANY INSTALLATION WHICH IS NOT COVERED BY THE ABOVE.

The Architect/Engineer assumes responsibility for appropriate use of this standard.

ADOPTED 6/21/2006 — CITY OF GEORGETOWN CONSTRUCTION STANDARDS AND DETAILS — **TYPICAL THRUST BLOCKS FOR WATER AND FORCE MAIN** — W11 — NTS — 1/2003 — MRS — TRB

The Architect/Engineer assumes responsibility for appropriate use of this standard.

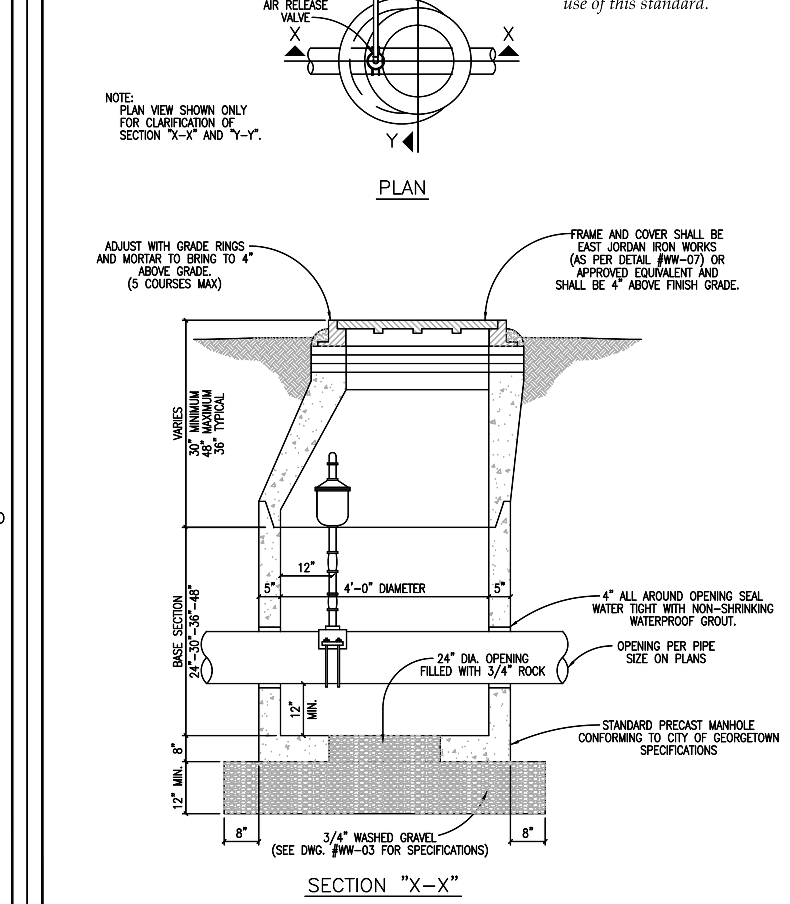

ADOPTED 6/21/2006 — CITY OF GEORGETOWN CONSTRUCTION STANDARDS AND DETAILS — **STANDARD AIR RELEASE VALVE FOR WATER MAIN** — W12 — NTS — 1/2003 — MRS — TRB

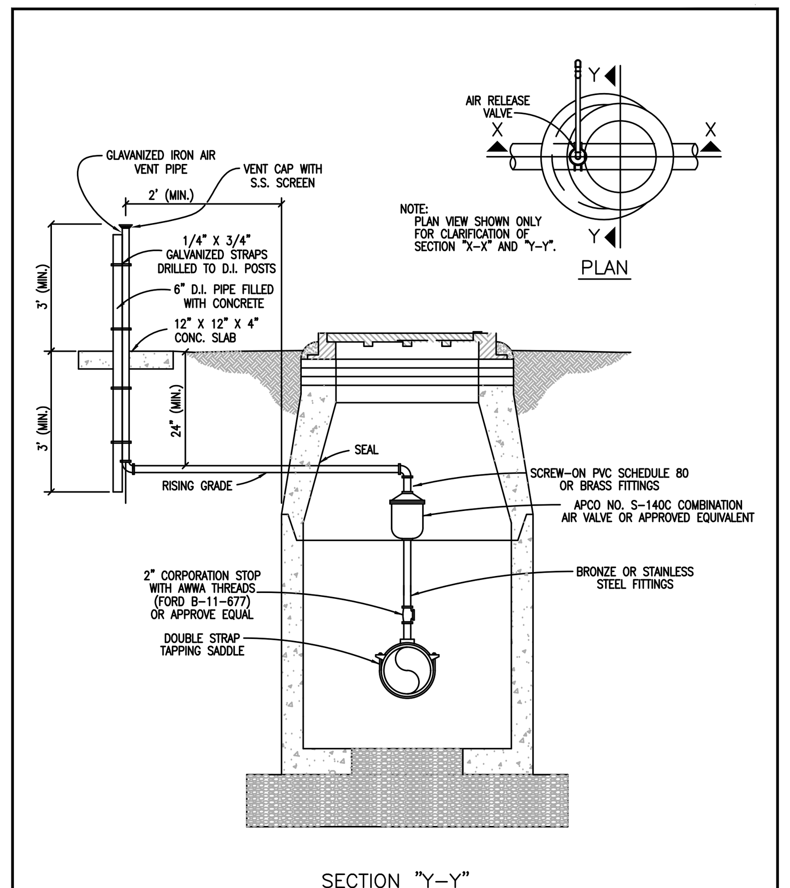

The Architect/Engineer assumes responsibility for appropriate use of this standard.

ADOPTED 6/21/2006 — CITY OF GEORGETOWN CONSTRUCTION STANDARDS AND DETAILS — **STANDARD AIR RELEASE VALVE FOR WATER MAIN** — W13 — NTS — 1/2003 — MRS — TRB

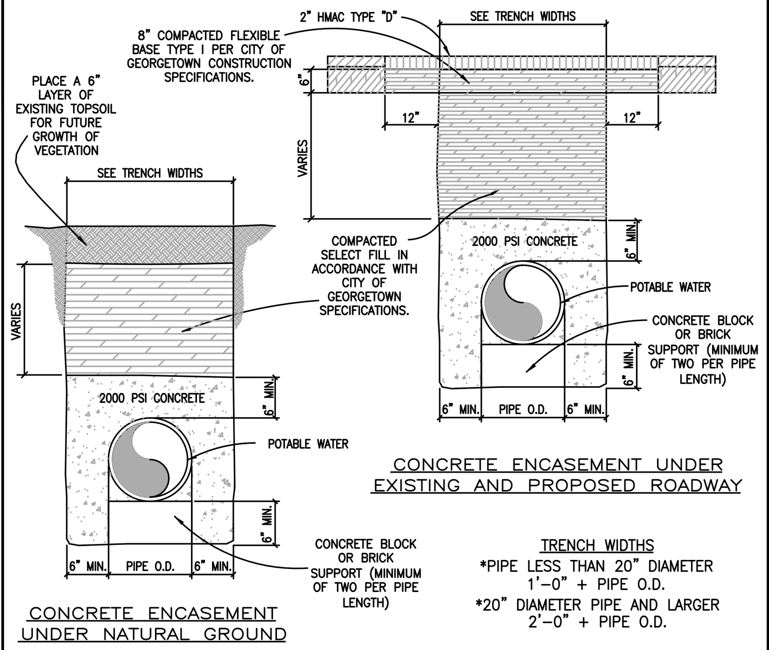

TRENCH WIDTHS
*PIPE LESS THAN 20" DIAMETER 1'-0" + PIPE O.D.
*20" DIAMETER PIPE AND LARGER 2'-0" + PIPE O.D.

NOTES:
1. ENCASEMENT TO BE CONSTRUCTED WHERE SEWER LINES PASS OVER OR UNDER A WATER MAIN WITH LESS THAN TWELVE INCHES (12") CLEAR DISTANCE.
2. AT CROSSINGS, ENCASEMENT SHALL EXTEND TEN FEET (10'-0") ON EITHER SIDE OF CROSSING.
3. BEGINNING AND ENDING OF ENCASEMENTS SHALL NOT BE MORE THAN SIX INCHES (6") FROM A PIPE JOINT.
4. WHERE WATER AND SEWER LINES PARALLEL WITH LESS THAN TEN FEET (10'-0") HORIZONTAL CLEAR DISTANCE, NO ENCASEMENT IS REQUIRED IF BOTH LINES ARE 150 PSI PRESSURE PIPE.
5. RAW WATER MAINS SHALL BE 150 PSI PRESSURE RATED WHEN PARALLELING POTABLE WATER MAINS WITH LESS THAN NINE FEET (9'-0") HORIZONTAL CLEARANCE.
6. WHERE MINIMUM COVER, THIRTY SIX INCHES (36") IS NOT AVAILABLE, ENCASEMENT WILL BE REQUIRED.
7. ALL CONCRETE ENCASEMENTS MUST BE FORMED AND INSPECTED BY THE CITY OF GEORGETOWN INSPECTOR PRIOR TO PLACING CONCRETE AND BACKFILLING.
8. CONTRACTOR OR ENGINEER MAY USE FLOWABLE BACKFILL AS AN ALTERNATE BACKFILL MATERIAL (SEE C9 FLOWABLE BACKFILL FOR THE SPECIFICATION).

The Architect/Engineer assumes responsibility for appropriate use of this standard.

ADOPTED 6/21/2006 — CITY OF GEORGETOWN CONSTRUCTION STANDARDS AND DETAILS — **CONCRETE ENCASEMENT DETAIL** — W15 — NTS — 1/2003 — MRS — TRB

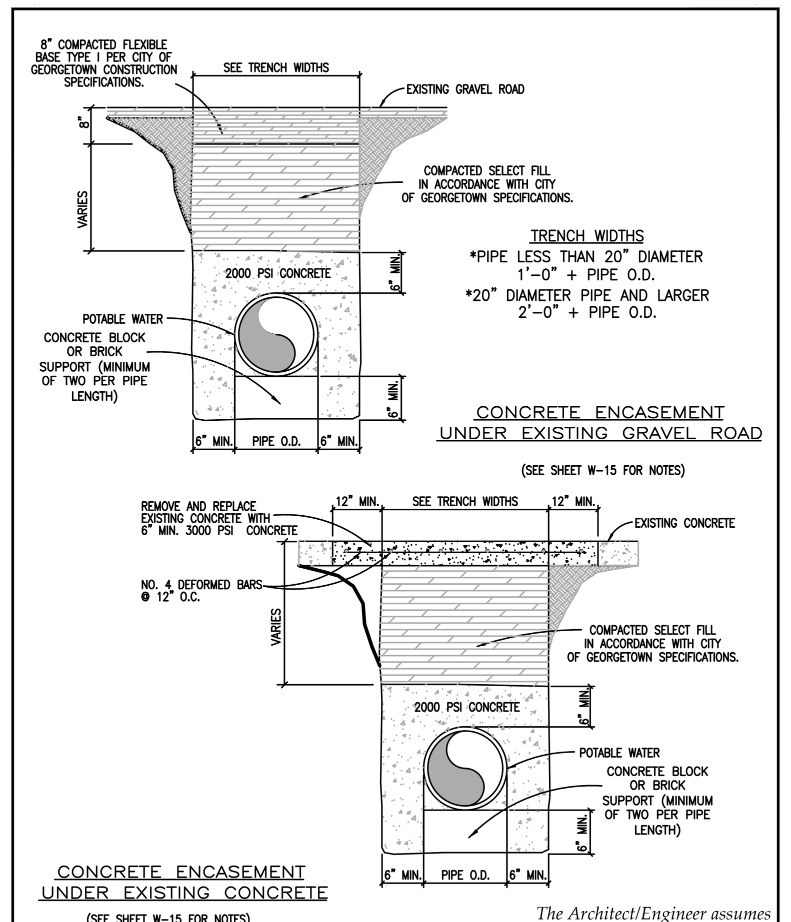

The Architect/Engineer assumes responsibility for appropriate use of this standard.

ADOPTED 6/21/2006 — CITY OF GEORGETOWN CONSTRUCTION STANDARDS AND DETAILS — **CONCRETE ENCASEMENT DETAIL** — W16 — NTS — 1/2003 — MRS — TRB

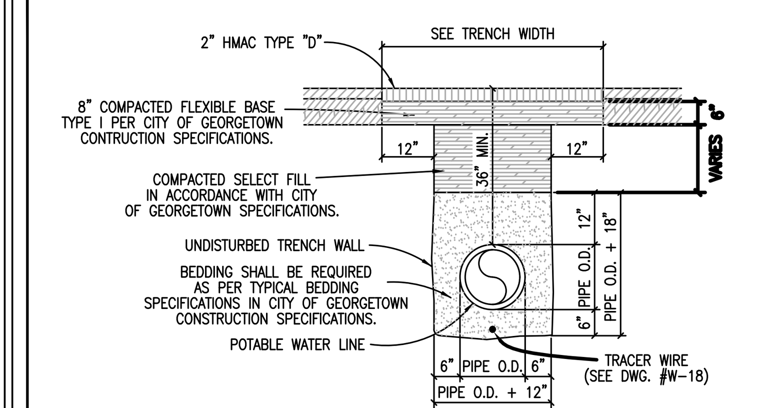

TRENCH WIDTHS
*PIPE LESS THAN 20" DIAMETER 1'-0" + PIPE O.D.
*20" DIAMETER PIPE AND LARGER 2'-0" + PIPE O.D.

NOTES:
1. REPLACED BASE MATERIAL OVER DITCH SHALL BE TWICE THE THICKNESS OF THE ORIGINAL BASE.
2. BASE MATERIAL SHALL BE IN LIFTS NOT TO EXCEED 6" AND EACH LIFT THOROUGHLY ROLLED OR TAMPED TO SPECIFIED MAXIMUM DENSITY.
3. ASPHALT CONCRETE PAVEMENT JOINTS SHALL BE MECHANICALLY SAWED.
4. SURFACE MATERIAL WILL BE CONSISTENT WITH THE EXISTING SURFACE.
5. DENSITY TESTS SHALL BE TAKEN IN ACCORDANCE WITH THE CITY OF GEORGETOWN CONSTRUCTION SPECIFICATIONS AND STANDARDS.
6. CONTRACTOR OR ENGINEER MAY USE FLOWABLE BACKFILL AS AN ALTERNATE BACKFILL MATERIAL (SEE C9 FLOWABLE BACKFILL FOR THE SPECIFICATION).

The Architect/Engineer assumes responsibility for appropriate use of this standard.

ADOPTED 6/21/2006 — CITY OF GEORGETOWN CONSTRUCTION STANDARDS AND DETAILS — **TRENCH AND EMBEDMENT AND PAVEMENT REPLACEMENT DETAIL UNDER EXISTING ROADWAY** — W17 — NTS — 1/2003 — MRS — TRB

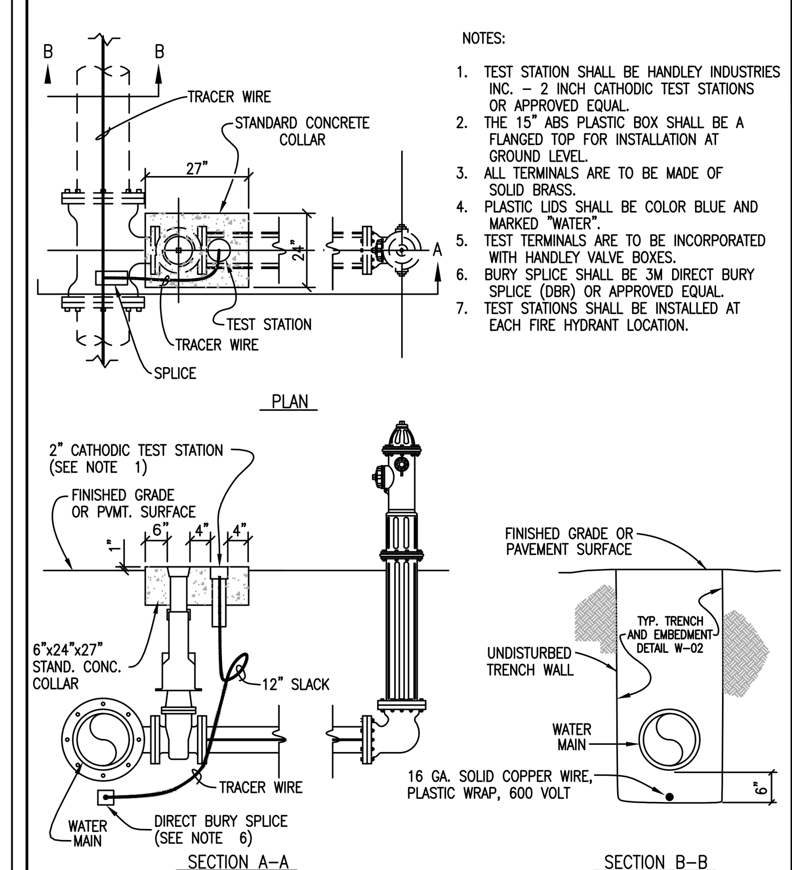

NOTES:
1. TEST STATION SHALL BE HANDLEY INDUSTRIES INC. – 2 INCH CATHODIC TEST STATIONS OR APPROVED EQUAL.
2. THE 15" ABS PLASTIC BOX SHALL BE A FLANGED TOP FOR INSTALLATION AT GROUND LEVEL.
3. ALL TERMINALS ARE TO BE MADE OF SOLID BRASS.
4. PLASTIC LIDS SHALL BE COLOR BLUE AND MARKED "WATER".
5. TEST TERMINALS ARE TO BE INCORPORATED WITH HANDLEY VALVE BOXES.
6. BURY SPLICE SHALL BE 3M DIRECT BURY SPLICE (DBR) OR APPROVED EQUAL.
7. TEST STATIONS SHALL BE INSTALLED AT EACH FIRE HYDRANT LOCATION.

The Architect/Engineer assumes responsibility for appropriate use of this standard.

ADOPTED 6/21/2006 — CITY OF GEORGETOWN CONSTRUCTION STANDARDS AND DETAILS — **TRACER WIRE INSTALLATION AND TEST STATION LOCATION** — W18 — NTS — 1/2003 — MRS — TRB

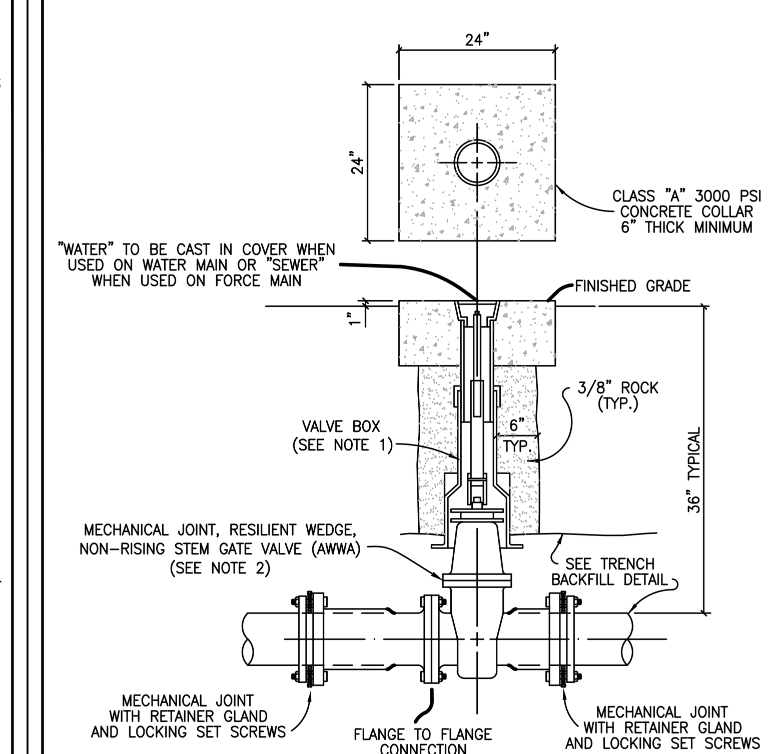

NOTES:
1. SEE VALVE SETTING DETAIL, DWG. #W-07.
2. ACCEPTABLE GATE VALVES ARE:
   A. MUELLER – 2360 SERIES
   B. CLOW

The Architect/Engineer assumes responsibility for appropriate use of this standard.

ADOPTED 6/21/2006 — CITY OF GEORGETOWN CONSTRUCTION STANDARDS AND DETAILS — **INLINE VALVE INSTALLATION** — W21 — NTS — 1/2003 — MRS — TRB

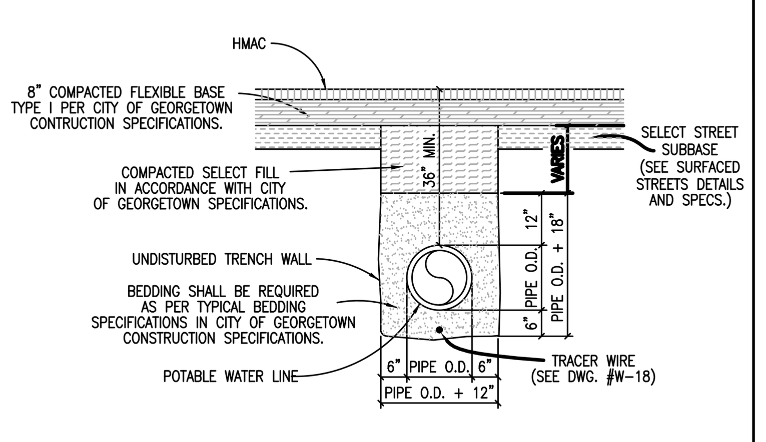

TRENCH WIDTHS
*PIPE LESS THAN 20" DIAMETER 1'-0" + PIPE O.D.
*20" DIAMETER PIPE AND LARGER 2'-0" + PIPE O.D.

NOTES:
1. DENSITY TESTS SHALL BE TAKEN IN ACCORDANCE WITH THE CITY OF GEORGETOWN CONSTRUCTION SPECIFICATIONS AND STANDARDS.
2. CONTRACTOR OR ENGINEER MAY USE FLOWABLE BACKFILL AS AN ALTERNATE BACKFILL MATERIAL (SEE C9 FLOWABLE BACKFILL FOR THE SPECIFICATION).

The Architect/Engineer assumes responsibility for appropriate use of this standard.

ADOPTED 6/21/2006 — CITY OF GEORGETOWN CONSTRUCTION STANDARDS AND DETAILS — **TRENCH AND EMBEDMENT DETAIL UNDER PROPOSED ROADWAY** — W22 — NTS — 1/2003 — MRS — TRB

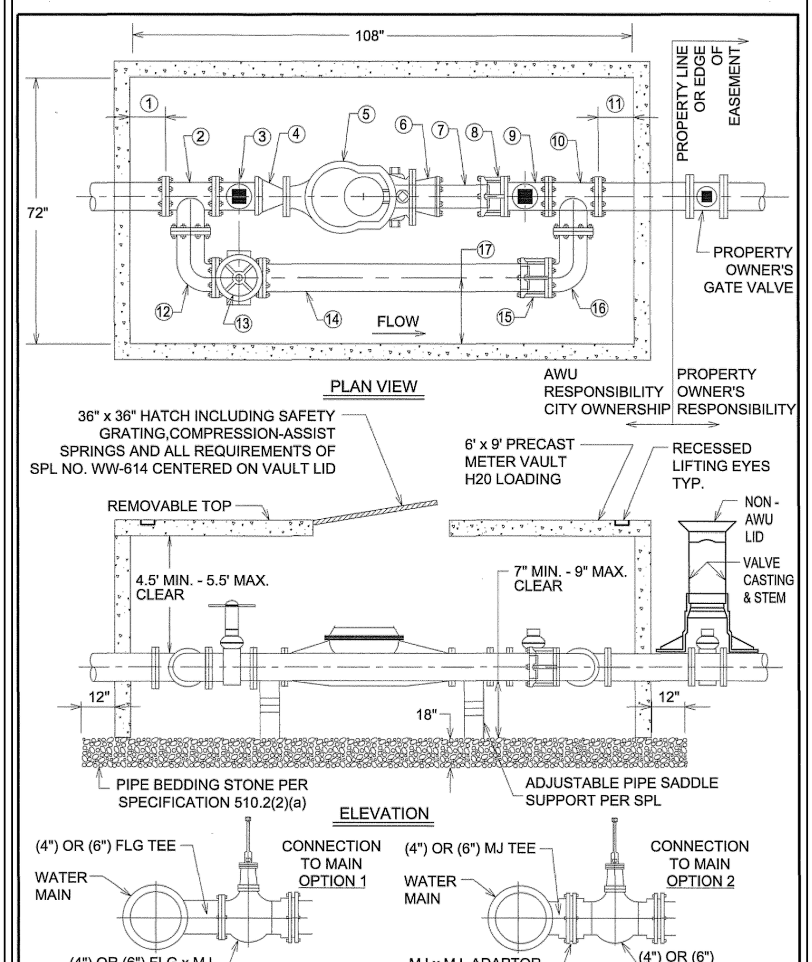

CITY OF AUSTIN — AUSTIN WATER UTILITY — Kathi L Flowers — 11/19/2015 ADOPTED — **3", 4" AND 6" COMPOUND & TURBINE METER INSTALLATIONS** — THE ARCHITECT/ENGINEER ASSUMES RESPONSIBILITY FOR APPROPRIATE USE OF THIS STANDARD. — STANDARD NO. 520-AW-06 — 1 OF 2

LARGE METER INSTALLATIONS

DIMENSIONS IN INCHES		3" TURBINE	3" COMPOUND	4" TURBINE	4" COMPOUND	6" TURBINE	6" COMPOUND
No.	METER LINE	4" BYPASS	4" BYPASS	4" BYPASS	4" BYPASS	6" BYPASS	6" BYPASS
1	CLEARANCE FROM VALVE WALL TO TEE	8"	8"	12"	12"	6"	6"
2	FLANGED TEE	13"	13"	13"	13"	16"	16"
3	COA GATE VALVE SQUARE NUT	9"	9"	9"	9"	10 1/2"	10 1/2"
4	3" X 4" FLANGED REDUCER (3" METER ONLY)	7"	7"	–	–	–	–
5	METER	17"	19"	20"	23"	24"	27"
6	3" X 4" FLANGED REDUCER (3" METER ONLY)	7"	7"	–	–	–	–
7+8	(7) FLANGED X PLAIN END DI PIPE + (8) RESTRAINED FLANGE COUPLING ADAPTER (RFCA) OR (7) FLANGE X DI PIPE + (8) DISMANTLING JOINT (DJ)	17"	15"	20"	17"	19"	16"
9	COA GATE VALVE SQUARE NUT	9"	9"	9"	9"	10 1/2"	10 1/2"
10	FLANGED TEE	13"	13"	13"	13"	16"	16"
11	CLEARANCE FROM INSIDE WALL TO TEE	8"	8"	12"	12"	6"	6"
	TOTAL (INCHES)	108.0"	108.0"	108.0"	108.0"	108.0"	108.0"
	BYPASS LINE						
1	CLEARANCE FROM INSIDE WALL TO TEE	8"	8"	12"	12"	6"	6"
	1/2 TEE	6 1/2"	6 1/2"	6 1/2"	6 1/2"	8"	8"
12	FLANGED 90° ELBOW	6 1/2"	6 1/2"	6 1/2"	6 1/2"	8"	8"
13	BYPASS GATE VALVE WITH HAND WHEEL	9"	9"	9"	9"	10 1/2"	10 1/2"
14+15	(14) FLANGED X PLAIN END DI PIPE + (15) RESTRAINED FLANGE COUPLING ADAPTOR (RFCA) OR (14) FLANGE X FLANGE DI PIPE + (15) DISMANTLING JOINT (DJ)	57"	57"	49"	49"	53 1/2"	53 1/2"
16	FLANGED 90° ELBOW	6 1/2"	6 1/2"	6 1/2"	6 1/2"	8"	8"
	1/2 TEE	6 1/2"	6 1/2"	6 1/2"	6 1/2"	8"	8"
11	CLEARANCE FROM VALVE WALL TO TEE	8"	8"	12"	12"	6"	6"
	TOTAL (INCHES)	108.0"	108.0"	108.0"	108.0"	108.0"	108.0"
17	CLEARANCE FROM INSIDE WALL TO CENTER OF BYPASS LINE	23"	23"	23"	23"	20"	20"

NOTES:
1. METER VAULT MUST BE PLACED AT THE PROPERTY LINE WITHIN PUBLIC RIGHT-OF-WAY OR WITHIN A DEDICATED WATER METER EASEMENT. METER SHALL NOT BE PLACED IN THE PATH OF VEHICULAR TRAFFIC INCLUDING ROADWAYS, DRIVEWAYS AND PARKING LOTS. METERS MAY NOT BE PLACED IN SIDEWALKS UNLESS SPECIFICALLY APPROVED BY AUSTIN WATER. METERS MUST BE ACCESSIBLE TO SERVICE VEHICLES AND SHALL NOT BE ENCLOSED WITHIN PROPERTY FENCES.
2. ALL PIPE AND FITTINGS FROM MAIN TO CUSTOMER VALVE SHALL BE RESTRAINED.
3. FACTORY NOTCHES WHERE PIPING GOES THROUGH VAULT WALL SHALL BE FILLED WITH NON-SHRINK GROUT PER SPL NO. WW-704A.

CITY OF AUSTIN — AUSTIN WATER UTILITY — Kathi L Flowers — 11/19/2015 ADOPTED — **3", 4" AND 6" COMPOUND & TURBINE METER INSTALLATIONS** — THE ARCHITECT/ENGINEER ASSUMES RESPONSIBILITY FOR APPROPRIATE USE OF THIS STANDARD. — STANDARD NO. 520-AW-06 — 2 OF 2

Per State Fire Marshall's Office an RME-U License is required in order to work on Private Fire Mains and Their Appurtenances (NFPA 24)

All Fire Department Connections (FDCs) shall be marked as approved by the Fire Code Official. Two red street lane reflectors (stimsonite model 88AB or similar) shall be installed six inches from centerline of the fire apparatus access roadway on the side closest to the FDC. Markers shall be parallel to the FDC having the reflective ends of the street markers facing the direction of traffic. 2012 IFC 912.7

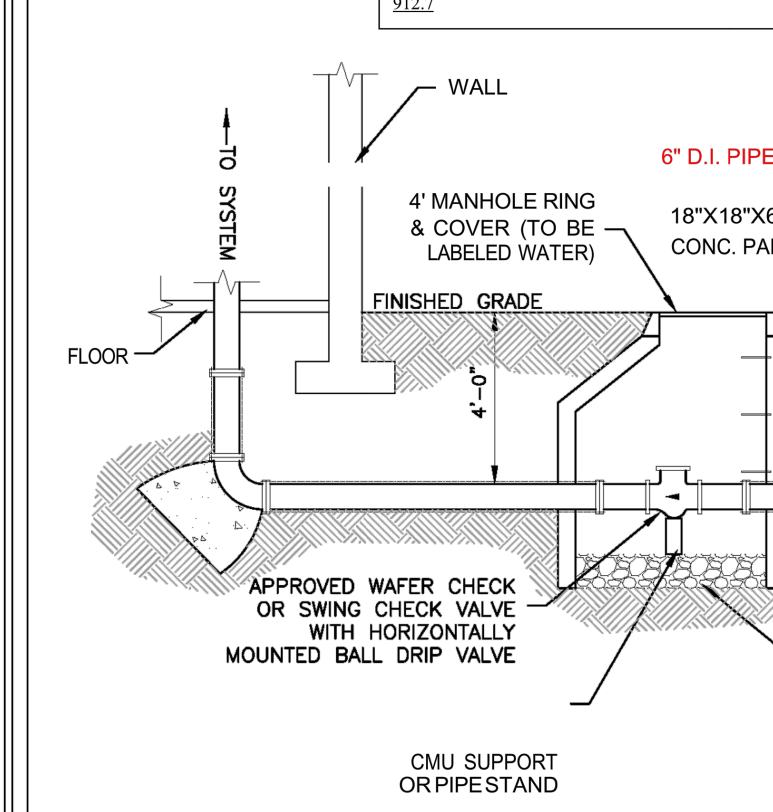

FIRE DEPARTMENT CONNECTION
NOT TO SCALE

811 Know what's below. Call before you dig.

THE LOCATION OF EXISTING UNDERGROUND UTILITIES ARE SHOWN IN AN APPROXIMATE WAY ONLY. THE CONTRACTOR SHALL DETERMINE THE EXACT LOCATION OF ALL EXISTING UTILITIES BEFORE COMMENCING WORK. HE AGREES TO BE FULLY RESPONSIBLE FOR ANY AND ALL DAMAGES WHICH MIGHT BE OCCASIONED BY HIS FAILURE TO EXACTLY LOCATE ADN PRESERVE ANY AND ALL UNDERGROUND UTILITIES.

ADDRESS: 500 WESTINGHOUSE ROAD

REV	DESCRIPTION	DATE	APR

DESIGNED BY: JG
REVIEWED BY: BG
DRAWN BY: JG

BGE
BROWN & GAY ENGINEERS, INC.
1701 DIRECTORS BLVD., SUITE 1000
AUSTIN, TX 78731
TBPE Registration No. F-1046
TEL: 512-879-0400 www.browngay.com

500 WESTINGHOUSE ROAD

ASCEND WESTINGHOUSE GEORGETOWN, TEXAS

UTILITY DETAILS (1 OF 2)

STATE OF TEXAS — BRIAN J. GRACE — 121846 — LICENSED PROFESSIONAL ENGINEER — 9/21/2020

2020-41-SDP

G:\TXC\Projects\DHI_Communities\7616-00-Westinghouse\LD\01_CADD\01_Shts\02_Site Plan\7616-C-SP-DETL-UTILITY.dwg Layout: 53 UTILITY DETAILS (2 OF 2) Plotted: 9/21/2020 9:52:45 AM

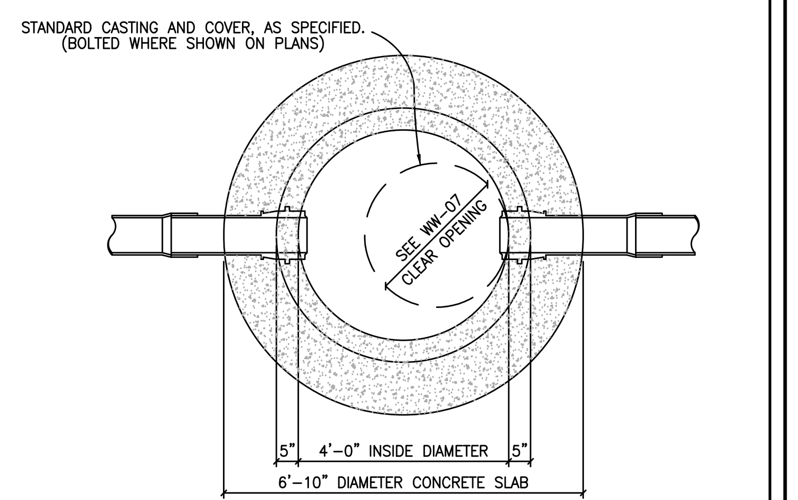

SEE DETAIL WW-03

MANHOLE PLAN

CITY OF GEORGETOWN NOTES:

MANHOLE DETAILS SHALL REFLECT THE CITY'S MINIMUM SPECIFICATIONS, AS STATED BELOW:

A. ALL MANHOLES SHALL BE 48" I.D., R.C.P., CLASS III, WITH RUBBER PROFILE GASKET – SINGLE OFF-SET JOINT CONFORMING TO ASTM C478, C433 AND C76.
B. ALL MANHOLES SHALL HAVE FRAME AND COVER, AS MANUFACTURED BY EAST JORDAN IRON WORKS (AS PER DETAIL # WW-07) OR APPROVED EQUIVALENT.
C. ALL MANHOLES SHALL BE CONCRETE WITH CAST IRON FRAME AND COVER.
D. ALL MANHOLES SHALL HAVE AN ECCENTRIC CONE.
E. MANHOLES MAY HAVE A FLAT LID, IF APPROVED BY CITY OF GEORGETOWN, BEING 12" THICK WITH A MINIMUM 30" OPENING, AS MANUFACTURED BY HANSEN PIPE AND PRECAST OR APPROVED EQUAL M.F.G. CONFORMING TO ASTM C478, 5000 P.S.I. CONCRETE, TRAFFIC BEARING AND WITH PROFILE GASKET – SINGLE OFF-SET JOINT CONFORMING TO ASTM C443.
F. INVERTS AND FLEXIBLE SEAL BOOTS, PER ASTM C-923, SHALL BE CAST INTO BASE SECTION.
G. MINIMUM DROP BETWEEN INVERTS SHALL BE ONE-TENTH OF A FOOT (0.1').
H. GRADE RINGS WITH AN I.D. TO MATCH FRAMES CLEAR OPENING WITH A MAXIMUM ADJUSTMENT OF 12" ARE ALLOWED.

The Architect/Engineer assumes responsibility for appropriate use of this standard.

REVISION NOTE: ADOPTED 6/21/2006
GEORGETOWN TEXAS — Georgetown Utility Systems
CITY OF GEORGETOWN CONSTRUCTION STANDARDS AND DETAILS
STANDARD MANHOLE – PLAN
DRAWING NAME: WW02 | SCALE: NTS | DATE: 1/2003 | DRAWN BY: MRS | APPROVED BY: TRB

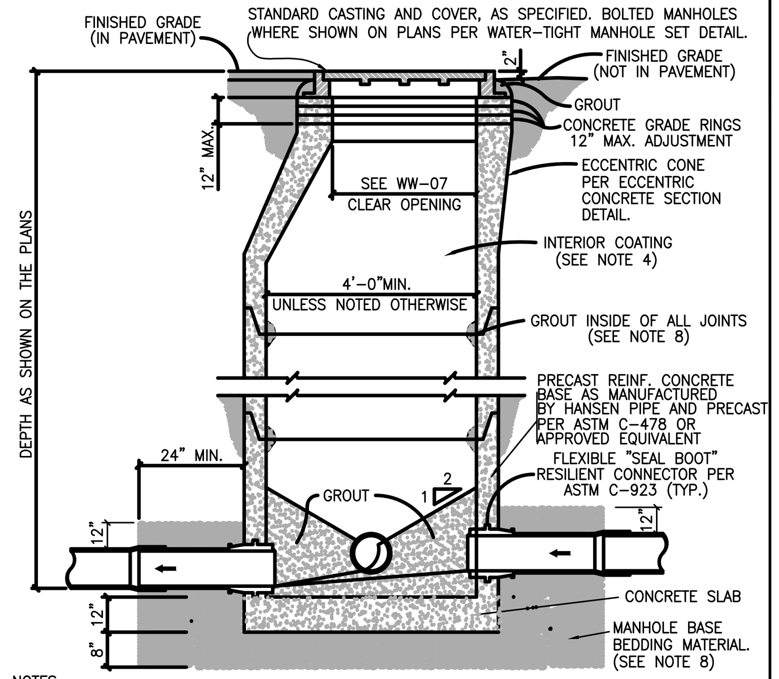

NOTES:
1. MANHOLES SHALL BE PRECAST ASTM C-478 BELL AND SPIGOT WITH PROFILE GASKET – SINGLE OFF-SET JOINTS.
2. SEE PLANS AND MANHOLE SCHEDULE, FOR MANHOLE SIZE, LOCATION, CONFIGURATION, TYPE OF TOP SECTION, VENTING REQUIREMENTS, PIPE SIZE AND TYPES.
3. SEE SPECIFICATIONS ON MATERIALS AND CONSTRUCTION.
4. AN 80 MIL. COAT OF RAVEN LINING SYSTEMS, RAVEN 405 ULTRA HIGH BUILD EPOXY COATING, OR SPRAY WALL EPOXY COATING, OR APPROVED EQUAL, TO BE APPLIED TO ENTIRE INTERIOR OF EACH WASTEWATER MANHOLE AND UNDERSIDE OF FLAT TOPS.
5. ALL MANHOLE COVERS SHALL BE BOLTED AND GASKETTED WHEN MANHOLES ARE LOCATED OUT FROM PAVEMENT.
6. MANHOLES TO BE VENTED ARE IDENTIFIED ON MANHOLE SCHEDULE. REFERENCE MANHOLE VENT DETAIL.
7. MANHOLES ARE TO BE DESIGNED TO RESIST LATERAL AND VERTICAL SOIL FORCES RESULTING FROM MANHOLE DEPTH. ADDITIONALLY, MANHOLES LOCATED IN PAVEMENT TO BE DESIGNED FOR HS-20 TRAFFIC LOADS.
8. GROUT SHALL MEET THE REQUIREMENTS AS STATED BY THE COATING MANUFACTURER.
9. MANHOLE BASE BEDDING MATERIAL SPECS. FOR 3/4" WASHED GRAVEL:
   SIEVE SIZE 2", PERCENT (%) RETAINED 0
   SIEVE SIZE 1 1/2", % RETAINED 0-10
   SIEVE SIZE 1", % RETAINED 45-80
   SIEVE SIZE 3/4", % RETAINED 85-100
   SIEVE SIZE 3/8", % RETAINED 95-100

The Architect/Engineer assumes responsibility for appropriate use of this standard.

REVISION NOTE: ADOPTED 6/21/2006
CITY OF GEORGETOWN CONSTRUCTION STANDARDS AND DETAILS
STANDARD MANHOLE – SECTION
DRAWING NAME: WW03 | SCALE: NTS | DATE: 1/2003 | DRAWN BY: MRS | APPROVED BY: TRB

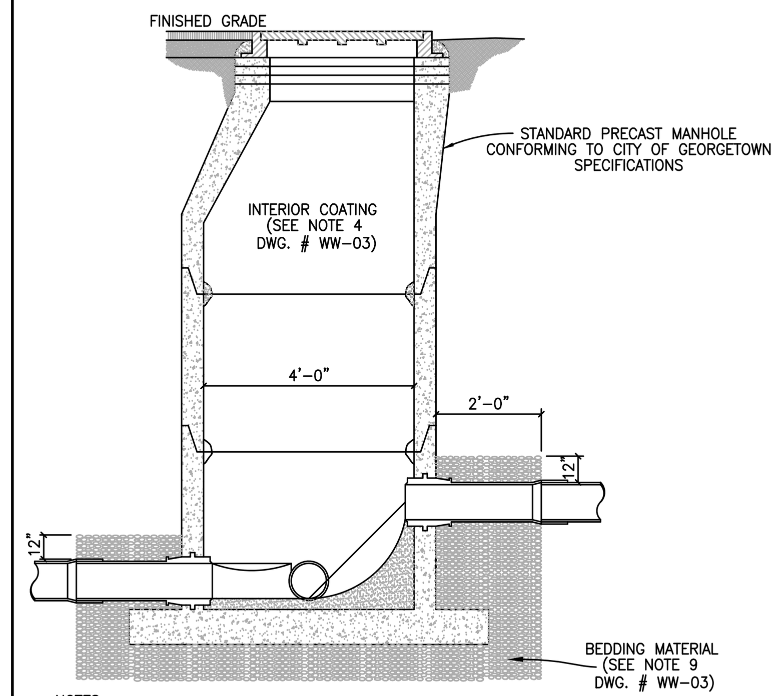

NOTES:
1. TO BE USED WHERE DROP IS SIX INCHES (6") TO TWO FEET (2'-0").
2. A FLOW CHANNEL SHALL BE CONSTRUCTED INSIDE MANHOLE TO DIRECT INFLUENT INTO FLOW STREAM.
3. CONSTRUCTION OF DROP SHALL PROVIDE AN OVERSIZED SLAB TO EXTEND UNDER THE DROP CONNECTION.
4. MINIMUM PIPE SIZE FOR DROP IS EIGHT INCHES (8").
5. SEE STANDARD MANHOLE DETAIL (DWG. # WW-03) FOR ADDITIONAL REQUIREMENTS.

The Architect/Engineer assumes responsibility for appropriate use of this standard.

REVISION NOTE: ADOPTED 6/21/2006
CITY OF GEORGETOWN CONSTRUCTION STANDARDS AND DETAILS
DROP CONNECTION–PRECAST MANHOLE TYPE "B"
DRAWING NAME: WW05 | SCALE: NTS | DATE: 1/2003 | DRAWN BY: MRS | APPROVED BY: TRB

FLOW PATTERNS FOR INVERT CHANNELS

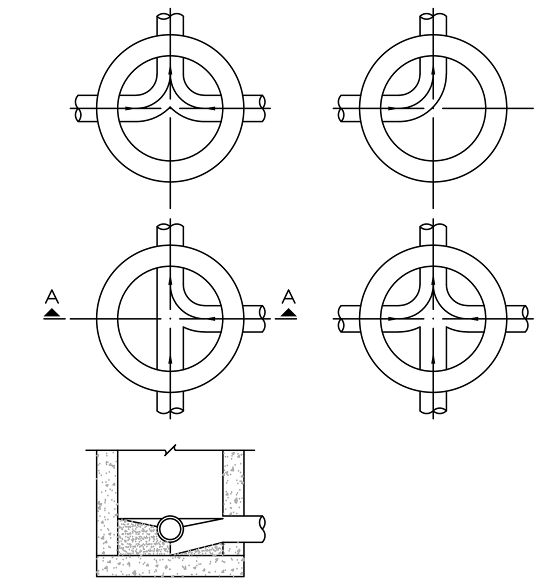

SECTION "A–A"

NOTES:
1. INVERT CHANNELS TO BE CONSTRUCTED FOR SMOOTH FLOW WITH NO OBSTRUCTIONS.
2. SPILLWAYS SHALL BE CONSTRUCTED BETWEEN PIPES WITH DIFFERENT INVERT ELEVATIONS PROVIDING FOR SMOOTH FLOW.
3. CHANNELS FOR FUTURE CONSTRUCTIONS (STUBS) SHALL BE CONSTRUCTED, FILLED WITH SAND, AND COVERED WITH 1" OF MORTAR.
4. SLOPE MANHOLE ITSELF WITH A 1:2 SLOPE FROM MANHOLE WALL TO CHANNEL.
5. INVERT SHALL BE A MINIMUM OF 1/2 THE DIAMETER OF THE LARGEST PIPE OR 4" DEEP.

The Architect/Engineer assumes responsibility for appropriate use of this standard.

REVISION NOTE: ADOPTED 6/21/2006
CITY OF GEORGETOWN CONSTRUCTION STANDARDS AND DETAILS
FLOW PATTERNS FOR INVERT CHANNELS
DRAWING NAME: WW06 | SCALE: NTS | DATE: 1/2003 | DRAWN BY: MRS | APPROVED BY: TRB

The Architect/Engineer assumes responsibility for appropriate use of this standard.

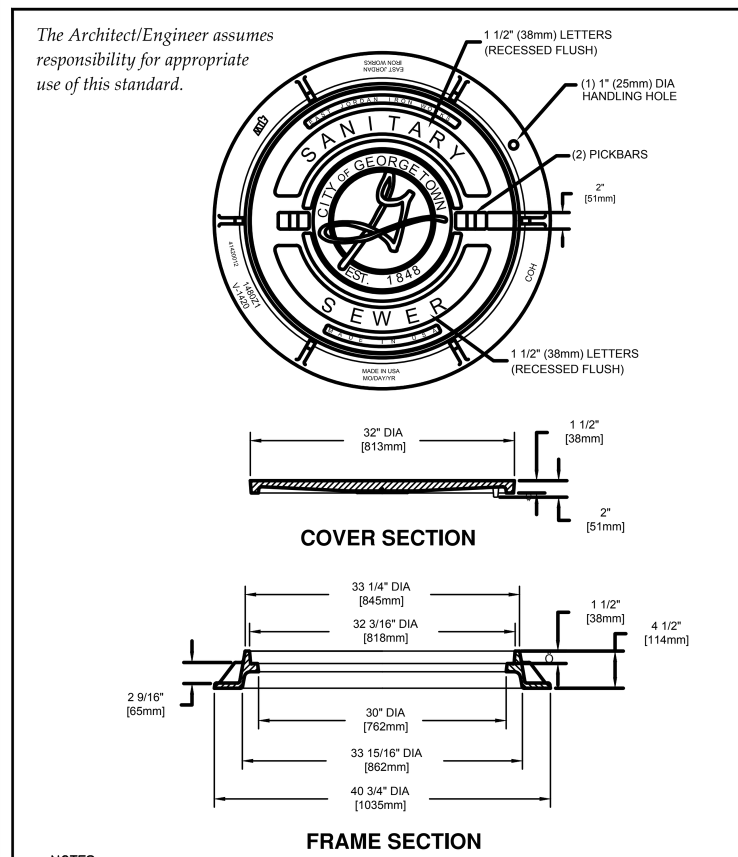

NOTES:
1. STANDARD WASTEWATER MANHOLE SET TO BE EAST JORDAN IRON WORKS, INC. CATALOG NO. 1480A V-1420/1480Z1, COVER TO BE STAMPED WITH "SANITARY SEWER".
2. STANDARD WASTEWATER MANHOLE SET TO BE HEAVY DUTY LOAD RATED.
3. FOR MORE DETAILED SPECIFICATIONS REFER TO EAST JORDAN IRON WORKS, INC. REFERENCE PRODUCT DRAWING 41420012 00148390.
4. FOR BOLTED WASTEWATER MANHOLE SET REFER TO DETAIL WW07A.

REVISION NOTE: ADOPTED 6/21/2006
CITY OF GEORGETOWN CONSTRUCTION STANDARDS AND DETAILS
STANDARD WASTEWATER MANHOLE SET
DRAWING NAME: WW07 | SCALE: NTS | DATE: 1/2003 | DRAWN BY: MRS | APPROVED BY: TRB

The Architect/Engineer assumes responsibility for appropriate use of this standard.

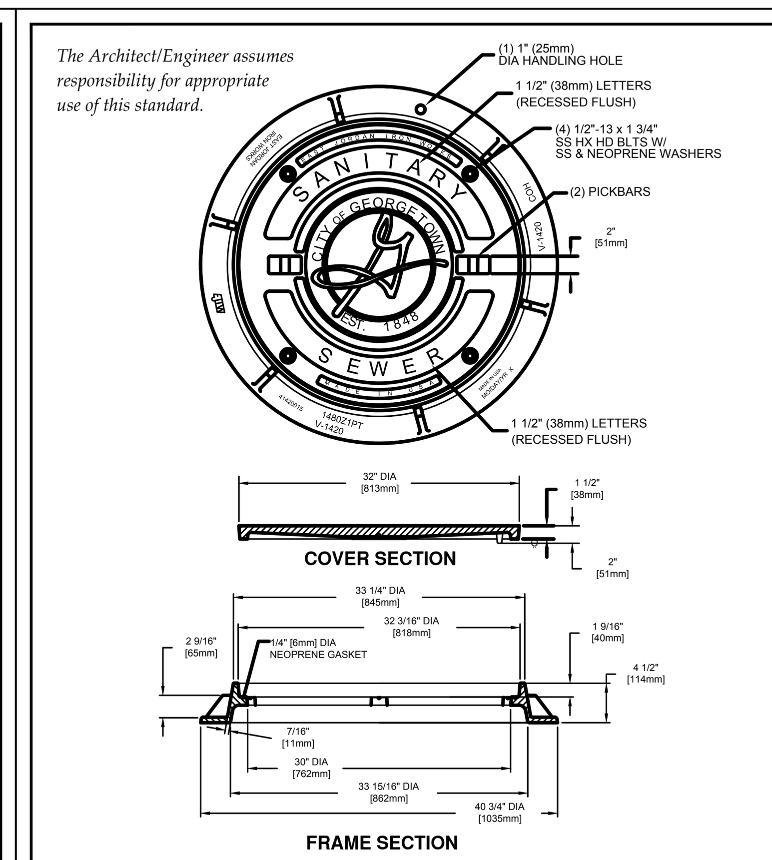

NOTES:
1. BOLTED WASTEWATER MANHOLE SET TO BE EAST JORDAN IRON WORKS, INC. CATALOG NO. 1480APT V-1420/1480Z1PT, COVER TO BE STAMPED WITH "SANITARY SEWER".
2. BOLTED WASTEWATER MANHOLE SET TO BE HEAVY DUTY LOAD RATED.
3. FOR MORE DETAILED SPECIFICATIONS REFER TO EAST JORDAN IRON WORKS, INC. REFERENCE PRODUCT DRAWING 00148392 41420015.
4. FOR STANDARD WASTEWATER MANHOLE SET REFER TO DETAIL WW07.

REVISION NOTE: ADOPTED 6/21/2006
CITY OF GEORGETOWN CONSTRUCTION STANDARDS AND DETAILS
BOLTED WASTEWATER MANHOLE SET
DRAWING NAME: WW07A | SCALE: NTS | DATE: 1/2006 | DRAWN BY: MRS | APPROVED BY: TRB

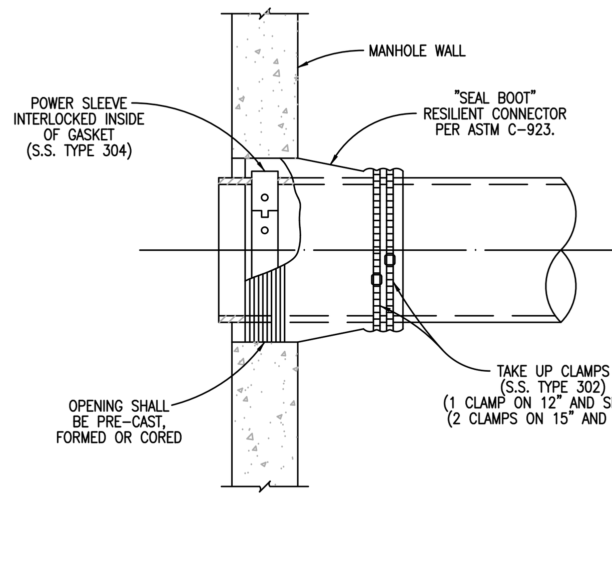

The Architect/Engineer assumes responsibility for appropriate use of this standard.

REVISION NOTE: ADOPTED 6/21/2006
CITY OF GEORGETOWN CONSTRUCTION STANDARDS AND DETAILS
FLEXIBLE "SEAL BOOT" CONNECTOR
DRAWING NAME: WW10 | SCALE: NTS | DATE: 1/2003 | DRAWN BY: MRS | APPROVED BY: TRB

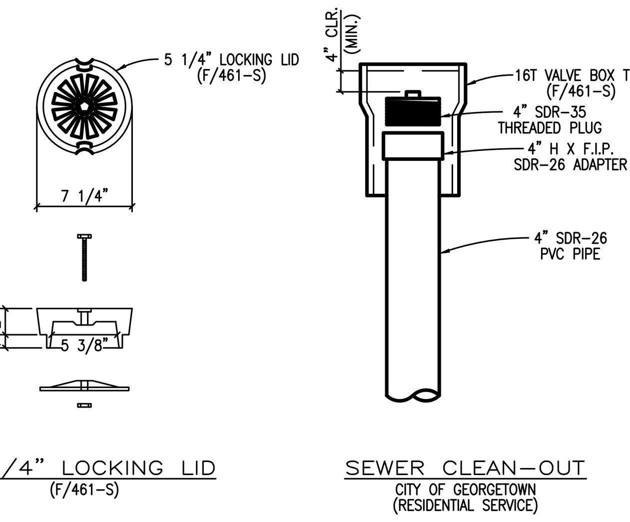

5 1/4" LOCKING LID (F/461-S)

SEWER CLEAN-OUT
CITY OF GEORGETOWN (RESIDENTIAL SERVICE)

The Architect/Engineer assumes responsibility for appropriate use of this standard.

REVISION NOTE: ADOPTED 6/21/2006
CITY OF GEORGETOWN CONSTRUCTION STANDARDS AND DETAILS
SEWER CLEAN-OUT DETAIL
DRAWING NAME: WW12 | SCALE: NTS | DATE: 1/2003 | DRAWN BY: MRS | APPROVED BY: TRB

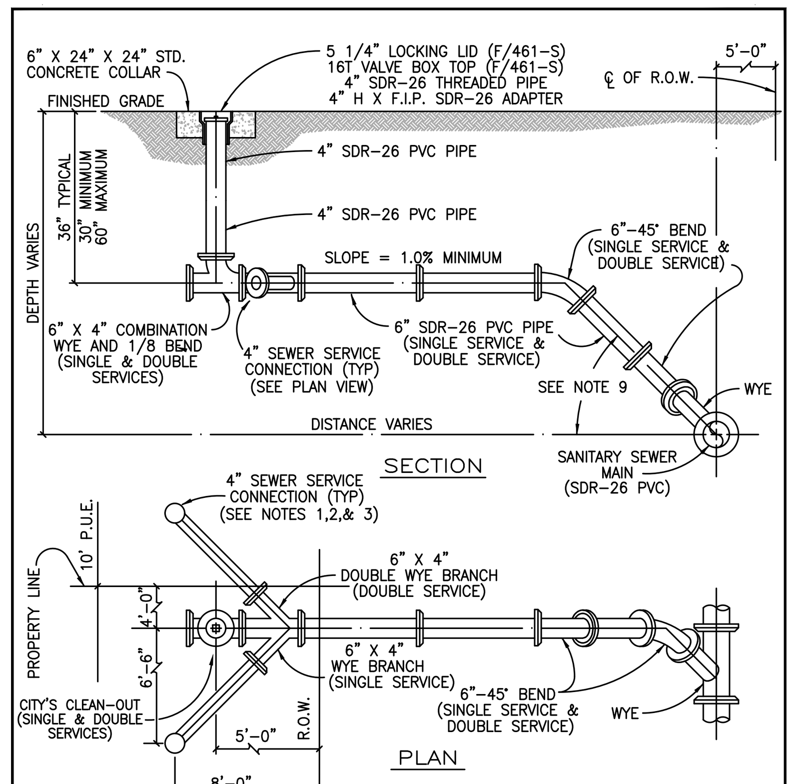

NOTES:
1. SERVICE CONNECTION RISERS SHALL TERMINATE 8' INSIDE THE PROPETY LINE.
2. THE END OF EACH SERVICE CONNECTION RISER SHALL BE EXTENDED 12" ABOVE FINISH GRADE.
3. EACH SERVICE CONNECTION SHALL BE PLUGGED WATER-TIGHT WITH AN APPROVED CAP OR PLUG.
4. FOR P.V.C. INSTALLATIONS, CONNECT TO EXISTING "BELL END" AND CONNECT OPPSITE END WITH P.V.C. TO P.V.C. KNOCK ON SLEEVE.
5. SOLIDLY TAMP BACKFILL AT LEAST ONE FOOT (1'-0") ABOVE TOP OF PIPE. SERVICES UNDER PAVED AREAS SHALL BE BACKFILLED TO THE SAME SPECIFICATIONS AS SHOWN ON PAVEMENT REPLACEMENT DETAIL.
6. CONTRACTOR SHALL MARK ON A CLEAN SET OF PLANS THE FINAL STATIONING OR DISTANCE AND DIRECTION FROM MANHOLE TO EACH SERVICE LATERAL AND GIVE TO ENGINEER FOR RECORD DRAWING PURPOSES.
7. ANY DEVIATION FROM THESE METHODS MUST BE APPROVED BY THE CITY OF GEORGETOWN ENGINEERING DEPARTMENT.
8. SERVICE LINE MATERIAL SHALL BE P.V.C., SDR-26.
9. SEWER SERVICE SLOPE TO BE 45° OFF CENTERLINE OF MAIN.

The Architect/Engineer assumes responsibility for appropriate use of this standard.

REVISION NOTE: ADOPTED 6/21/2006
CITY OF GEORGETOWN CONSTRUCTION STANDARDS AND DETAILS
SEWER SERVICE CONNECTIONS
DRAWING NAME: WW13 | SCALE: NTS | DATE: 1/2003 | DRAWN BY: MRS | APPROVED BY: TRB

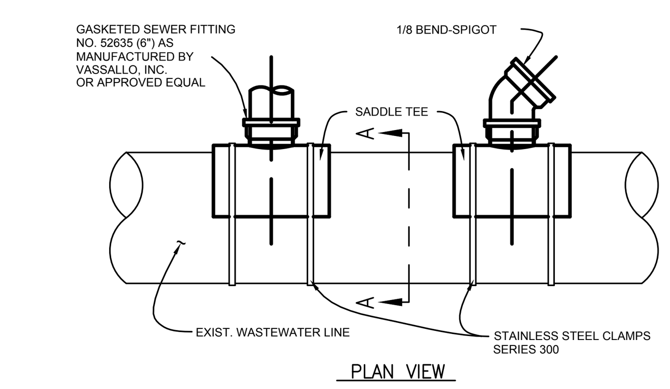

PLAN VIEW

SADDLE TEE				
PART NO.	SIZE	L1	H	P
52635	8"X6"	5.625	5.659	1.448

PLASTIC TRENDS INC. - 1/8 BEND - SPIGOT					
PART NO.	SIZE	A	B	C	D
G 406	6	11.270	6.146	1.870	6.090

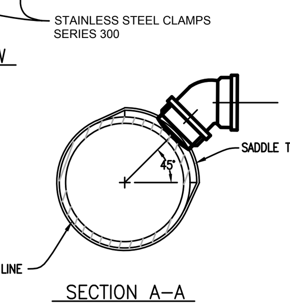

SECTION A–A

NOTES: 1. FLEXIBLE SADDLE TO BE INSTALLED IN ACCORDANCE WITH MANUFACTURER'S REQUIREMENTS.
2. SADDLE TEE SHALL BE ORIENTATED 45° TO MAIN. (SEE SEWER SERVICE CONNECTIONS DETAIL - DWG # WW-13)
3. EXCAVATE AROUND EXISTING 8-INCH PIPE, EXPOSING SUFFICIENT ROOM FOR S.S. CLAMPS.
4. THOROUGHLY CLEAN AND DRY THE MATING SURFACE WITH RAG OR PAPER TOWEL MAKE SURE THEY ARE FREE OF DUST AND MOISTURE.
5. MARK THE SIZE OF THE HOLE TO BE CUT USING THE GASKET SKIRT OR THE SADDLE ITSELF AS THE TEMPLATE.
6. SAW OUT THE SECTION OF THE PIPE WHERE THE SADDLE WILL BE LOCATED, WITH A SABER OR KEY HOLE SAW.
7. TEST TO MAKE SURE SADDLE FITS HOLE PROPERLY.
8. SERVICE PIPE SHALL NOT EXTEND MORE THAN ONE-HALF INCH INTO THE MAIN.
9. PLACE GASKET SKIRT AND SADDLE OVER OPENING AND TIGHTEN BAND CLAMPS EVENLY UNTIL SADDLE IS FIRMLY ATTACHED TO THE PIPE. APPLY PRESSURE ON THE SADDLE AGAINST THE PIPE WHILE TIGHTENING THE CLAMPS AS INDICATED ABOVE. DO NOT OVER TIGHTEN, DO NOT STRIP THREAD.
10. REPLACE THE BEDDING AND BACKFILL IN ACCORDANCE WITH THE TRENCH EMBEDMENT DETAIL.

The Architect/Engineer assumes responsibility for appropriate use of this standard.

REVISION NOTE: ADOPTED 6/21/2006
CITY OF GEORGETOWN CONSTRUCTION STANDARDS AND DETAILS
GASKETED SEWER FITTING FOR SEWER SERVICE CONNECTIONS TO EXISTING MAINS
DRAWING NAME: WW13A | SCALE: NTS | DATE: 1/2003 | DRAWN BY: MRS | APPROVED BY: TRB

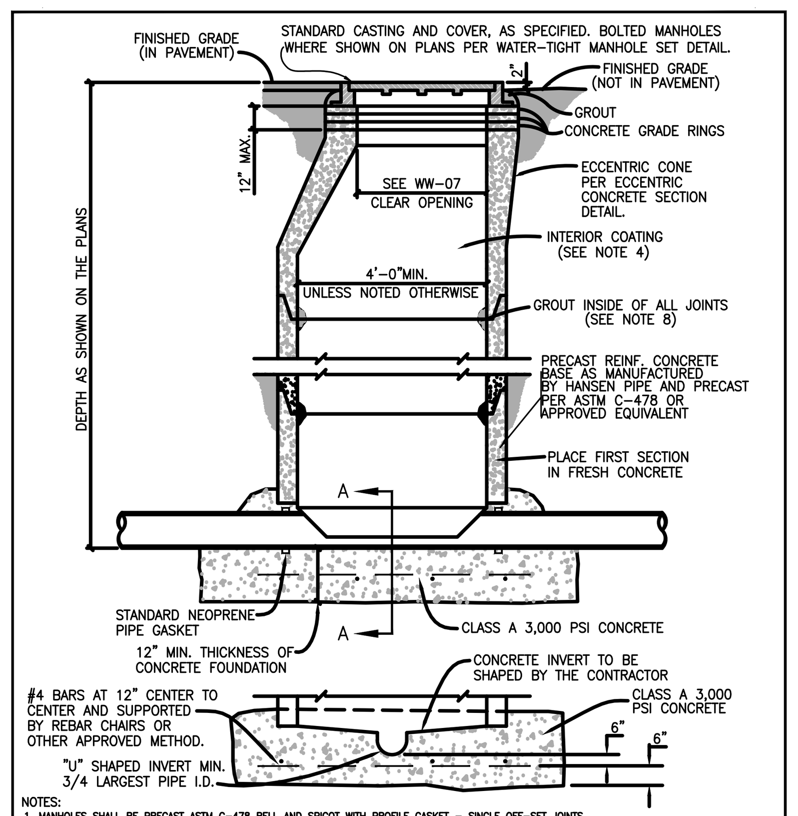

NOTES:
1. MANHOLES SHALL BE PRECAST ASTM C-478 BELL AND SPIGOT WITH PROFILE GASKET – SINGLE OFF-SET JOINTS.
2. SEE PLANS AND MANHOLE SCHEDULE, FOR MANHOLE SIZE, LOCATION, CONFIGURATION, TYPE OF TOP SECTION, VENTING REQUIREMENTS, PIPE SIZE AND TYPES.
3. SEE SPECIFICATIONS ON MATERIALS AND CONSTRUCTION.
4. AN 80 MIL. COAT OF RAVEN LINING SYSTEMS, RAVEN 405 ULTRA HIGH BUILD EPOXY COATING, OR SPRAY WALL EPOXY COATING, OR APPROVED EQUAL, TO BE APPLIED TO ENTIRE INTERIOR OF EACH WASTEWATER MANHOLE AND UNDERSIDE OF FLAT TOPS.
5. ALL MANHOLE COVERS SHALL BE BOLTED AND GASKETTED WHEN MANHOLES ARE LOCATED OUT FROM PAVEMENT.
6. MANHOLES TO BE VENTED ARE IDENTIFIED ON MANHOLE SCHEDULE. REFERENCE MANHOLE VENT DETAIL.
7. MANHOLES ARE TO BE DESIGNED TO RESIST LATERAL AND VERTICAL SOIL FORCES RESULTING FROM MANHOLE DEPTH. ADDITIONALLY, MANHOLES LOCATED IN PAVEMENT TO BE DESIGNED FOR HS-20 TRAFFIC LOADS.
8. GROUT SHALL MEET THE REQUIREMENTS AS STATED BY THE COATING MANUFACTURER.
9. MANHOLE BASE BEDDING MATERIAL SPECS. FOR 3/4" WASHED GRAVEL:
   SIEVE SIZE 2", PERCENT (%) RETAINED 0 SIEVE SIZE 1 1/2", % RETAINED 0-10
   SIEVE SIZE 1", % RETAINED 45-80 SIEVE SIZE 3/4", % RETAINED 85-100
   SIEVE SIZE 3/8", % RETAINED 95-100
10. ALL PVC PIPE SHALL BE REMOVED FROM INVERT.

The Architect/Engineer assumes responsibility for appropriate use of this standard.

REVISION NOTE: ADOPTED 6/21/2006
CITY OF GEORGETOWN CONSTRUCTION STANDARDS AND DETAILS
PRECAST MANHOLE ON CAST-IN-PLACE FOUNDATION
DRAWING NAME: WW20 | SCALE: NTS | DATE: 1/2006 | DRAWN BY: MRS | APPROVED BY: TRB

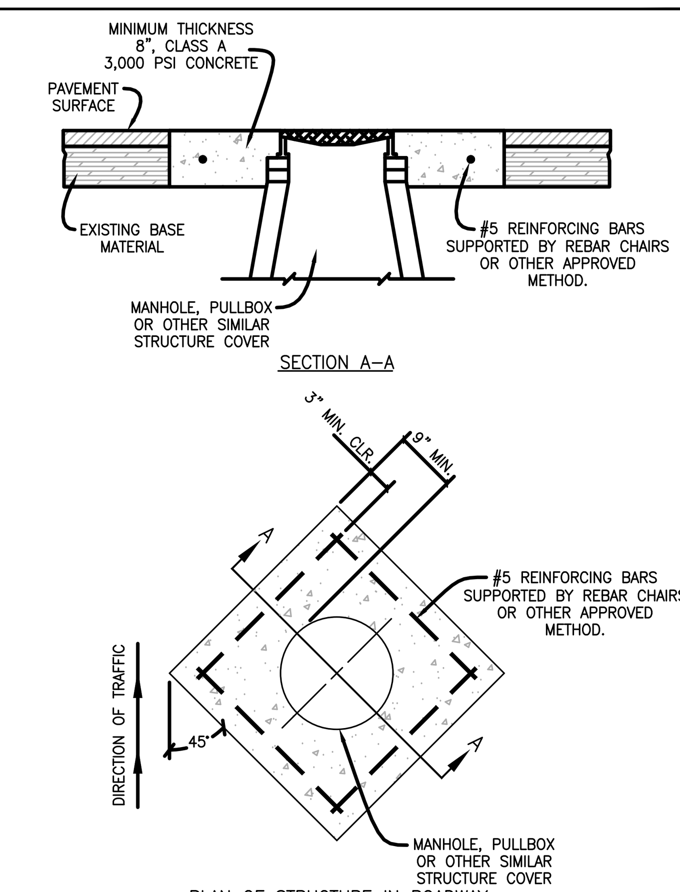

PLAN OF STRUCTURE IN ROADWAY

NOTE:
INSTALLATION OF THE CONCRETE CASTING IS REQUIRED FOR AND APPLIES TO ALL TYPES OF MANHOLES TO BE LOCATED IN THE ROADWAY.

The Architect/Engineer assumes responsibility for appropriate use of this standard.

REVISION NOTE: APPROVED 6/21/2006
CITY OF GEORGETOWN CONSTRUCTION STANDARDS AND DETAILS
CONCRETE CASTING MANHOLE DETAIL
DRAWING NAME: WW21 | SCALE: NTS | DATE: 1/2006 | DRAWN BY: MRS | APPROVED BY: TRB

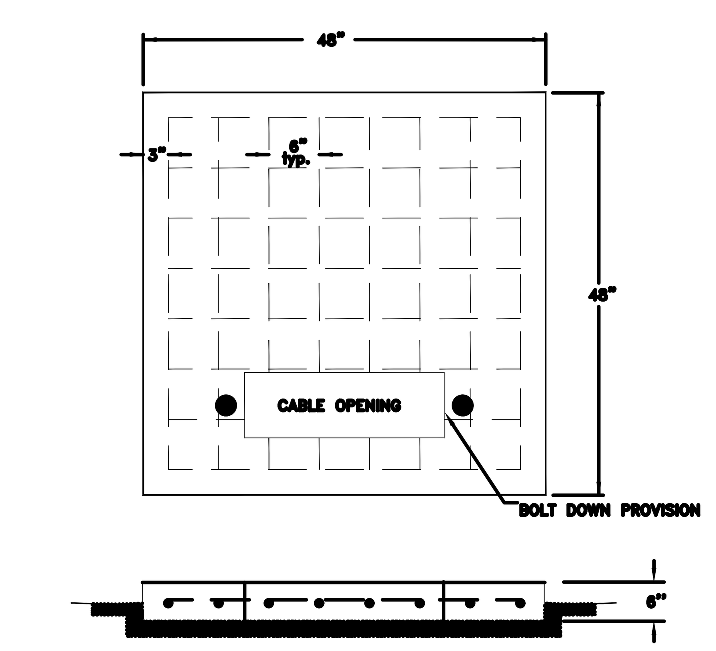

Notes:
1. Concrete testing, 4000 lbs per sq inch; 4% – 6% entrained air, 3/4" max. size aggregate.
2. #4 reinforcing steel, ATSM-A615 grade 60, place approximately 6" on-center each way and securely tied together.
3. Minimum concrete cover over reinforcing steel 3" unless noted otherwise.
4. Wood float finish, leaving no depressions.

The Architect/Engineer assumes responsibility for appropriate use of this standard.

REVISION NOTE: ADOPTED 6/21/2006
CITY OF GEORGETOWN CONSTRUCTION STANDARDS AND DETAILS
24.9/14.4 kV PRIMARY SINGLE-PHASE CONCRETE PAD (TRANSFORMER, VACUUM SWITCH, OR JUNCTION BOX)
PAGE 1 OF 2
DRAWING NAME: GEO-207 | SCALE: NTS | DATE: 6/12/03 | DRAWN BY: KJH | APPROVED BY: CCS | GUM1-5C

MATERIAL LIST

ITEM NO.	STOCK NO.	DESCRIPTION	

This Page Intentionally Left Blank

The Architect/Engineer assumes responsibility for appropriate use of this standard.

REVISION NOTE: ADOPTED 6/21/2006
CITY OF GEORGETOWN CONSTRUCTION STANDARDS AND DETAILS
24.9/14.4 kV PRIMARY SINGLE-PHASE CONCRETE PAD (TRANSFORMER, VACUUM SWITCH, OR JUNCTION BOX)
PAGE 2 OF 2
DRAWING NAME: GEO-207A | SCALE: NTS | DATE: 6/2/03 | DRAWN BY: GBY | APPROVED BY: CCS | GUM1-5C

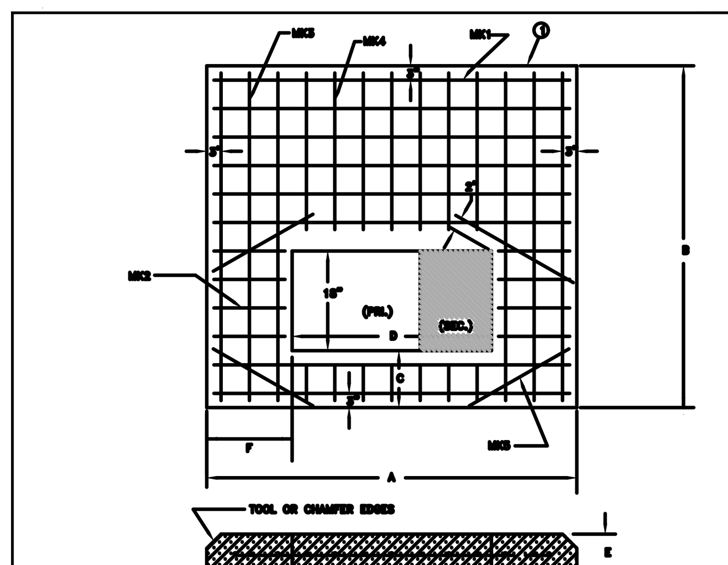

PAD	3-PHASE TRANSFORMER kVA	A	B	C	D	E	F	MK1	MK2	MK3	MK4	MK5
#1	75, 112.5, 150, 225, 300, 500	76	62	12	42	6	17	7 #4 70"	4 #4 10"	6 #4 57"	6 #4 25"	4 #4 25"
#2	750, 1000	120	120	12	54	8	25	12 #4 98"	6 #4 19"	6 #4 94"	7 #4 66"	4 #4 29"
#3	1500, 2000	120	120	12	66	12	30.5	12 #4 98"	6 #4 19"	6 #4 94"	7 #4 66"	4 #4 29"

Notes:
1. Concrete testing, 4000 lbs. per sq. inch; 4% – 6% entrained air, 3/4" maximum size aggregate.
2. Reinforcing steel, ATSM-A615 grade 60, place approximately 6" on-center each way and securely tied together.
3. Minimum concrete cover over reinforcing steel 2", unless noted otherwise.
4. Wood float finish, leaving no depressions.

The Architect/Engineer assumes responsibility for appropriate use of this standard.

REVISION NOTE: ADOPTED 6/21/2006
CITY OF GEORGETOWN CONSTRUCTION STANDARDS AND DETAILS
24.9/14.4 kV PRIMARY THREE PHASE CONCRETE PAD (PAD-MOUNTED TRANSFORMER)
PAGE 1 OF 2
DRAWING NAME: GEO-210 | SCALE: NTS | DATE: 6/12/03 | DRAWN BY: KJH | APPROVED BY: CCS | GUM1-6C-TA

MATERIAL LIST

ITEM NO.	STOCK NO.	DESCRIPTION	QTY.

This Page Intentionally Left Blank

The Architect/Engineer assumes responsibility for appropriate use of this standard.

REVISION NOTE: ADOPTED 6/21/2006
CITY OF GEORGETOWN CONSTRUCTION STANDARDS AND DETAILS
24.9/14.4 kV PRIMARY THREE-PHASE CONCRETE PAD (PAD-MOUNTED TRANSFORMER)
PAGE 2 OF 2
DRAWING NAME: GEO-210A | SCALE: NTS | DATE: 6/2/03 | DRAWN BY: GBY | APPROVED BY: CCS | GUM1-6C-TA

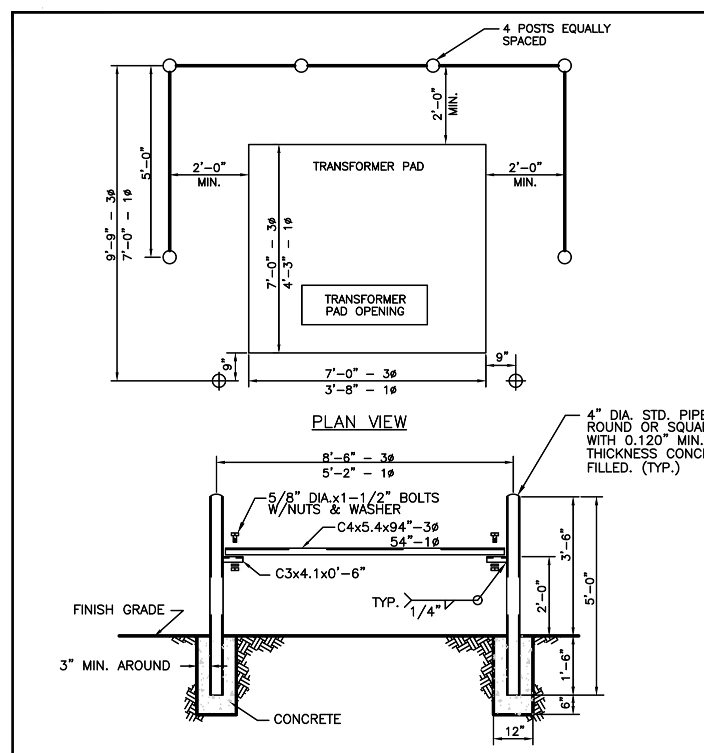

NOTES:
1. IF A BUILDING IS USED AS ANY PORTION OF THIS GUARD, THE TRANSFORMER PAD SHALL BE SO LOCATED THAT THE PAD SIDE OR SIDES ADJACENT TO THE SURFACE OF THE BUILDING SHALL HAVE A CLEARANCE OF NOT LESS THAN 5 FEET. FOR TRANSFORMERS 750 KVA AND ABOVE CONTACT GEORGETOWN UTILITY SERVICES ABOUT SPECIAL CLEARANCE REQUIREMENTS.
2. 10'-0" CLEARANCE SHALL BE PROVIDED IN FRONT OF THE EQUIPMENT TO PERMIT HOT STICK OPERATION.

The Architect/Engineer assumes responsibility for appropriate use of this standard.

REVISION NOTE: ADOPTED 6/21/2006
CITY OF GEORGETOWN CONSTRUCTION STANDARDS AND DETAILS
PROTECTIVE BOLLARD INSTALLATION FOR PADMOUNT XFMRS, JUNCTION BOXES AND SWITCHGEAR
DRAWING NAME: UGPB1.1 | SCALE: NTS | DATE: 7/05 | DRAWN BY: JWL | APPROVED BY: MWM

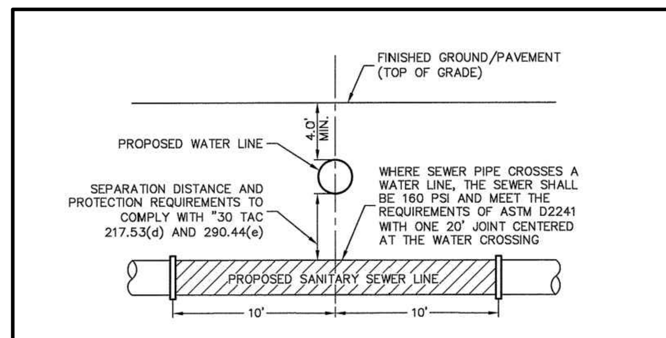

TYPICAL SANITARY SEWER/WATER CROSSING DETAIL

NOT-TO-SCALE

811 Know what's below. Call before you dig.

THE LOCATION OF EXISTING UNDERGROUND UTILITIES ARE SHOWN IN AN APPROXIMATE WAY ONLY. THE CONTRACTOR SHALL DETERMINE THE EXACT LOCATION OF ALL EXISTING UTILITIES BEFORE COMMENCING WORK. HE AGREES TO BE FULLY RESPONSIBLE FOR ANY AND ALL DAMAGES WHICH MIGHT BE OCCASIONED BY HIS FAILURE TO EXACTLY LOCATE ADN PRESERVE ANY AND ALL UNDERGROUND UTILITIES.

ADDRESS: 500 WESTINGHOUSE ROAD

REV	DESCRIPTION	DATE	APR

DESIGNED BY: JG
REVIEWED BY: BG
DRAWN BY: JG

BGE
BROWN & GAY ENGINEERS, INC.
1701 DIRECTORS BLVD., SUITE 1000
AUSTIN, TX 78731
TBPE Registration No. F-1046
TEL: 512-879-0400 www.browngay.com

500 WESTINGHOUSE ROAD

ASCEND WESTINGHOUSE
GEORGETOWN, TEXAS

UTILITY DETAILS (2 OF 2)

STATE OF TEXAS — BRIAN J. GRACE — 121846 — LICENSED PROFESSIONAL ENGINEER — 9/21/2020

2020-41-SDP

SHEET 57 OF 76

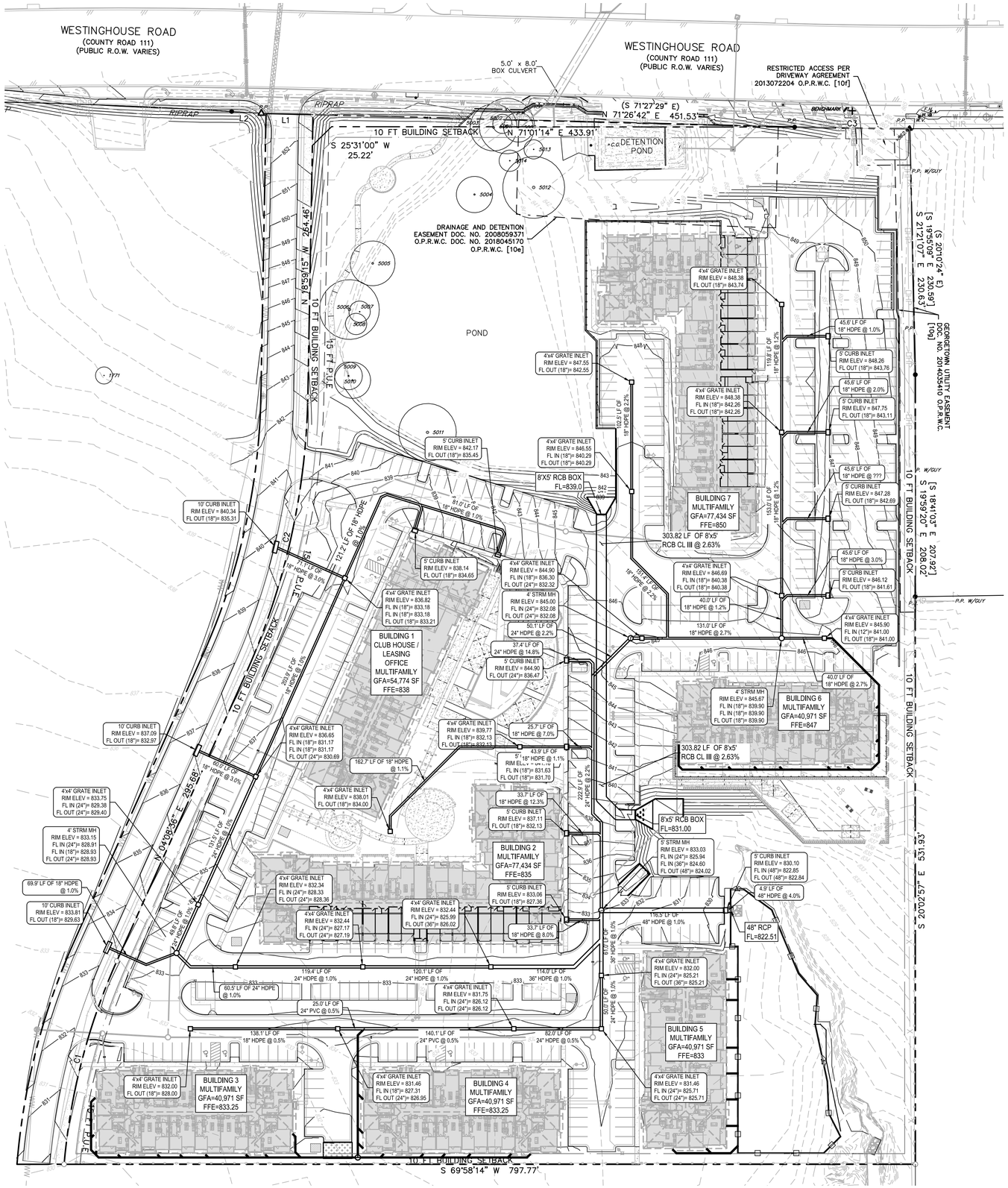

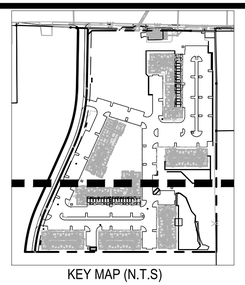

KEY MAP (N.T.S)

LEGEND

- PROPERTY BOUNDARY
- EXISTING MAJOR CONTOUR
- EXISTING MINOR CONTOUR
- PROPOSED MAJOR CONTOUR
- PROPOSED MINOR CONTOUR

THE LOCATION OF EXISTING UNDERGROUND UTILITIES ARE SHOWN IN AN APPROXIMATE WAY ONLY. THE CONTRACTOR SHALL DETERMINE THE EXACT LOCATIONS OF ALL EXISTING UTILITIES BEFORE COMMENCING WORK. HE IS ALSO RESPONSIBLE FOR PROTECTING ALL UTILITIES FROM DAMAGES WHICH MIGHT BE OCCASIONED BY HIS FAILURE TO EXACTLY LOCATE ADN PRESERVE ANY AND ALL UNDERGROUND UTILITIES.

0 25' 50' 100'
SCALE: 1" = 50'

Know what's below. Call before you dig.

ADDRESS: 500 WESTINGHOUSE ROAD

REV	DESCRIPTION	DATE	APR

DESIGNED BY: JG
REVIEWED BY: BG
DRAWN BY: JG

BGE

BROWN & GAY ENGINEERS, INC.
1701 DIRECTORS BLVD, SUITE 1000
AUSTIN, TX 78731
TBPE Registration No. F-1046
TEL: 512-879-0400 www.brownjgay.com

ASCEND WESTINGHOUSE
GEORGETOWN, TEXAS

OVERALL STORM SEWER PLAN

STATE OF TEXAS
BRIAN J. GRACE
121846
LICENSED
PROFESSIONAL ENGINEER
9/21/2020

SHEET 58 OF 76

500 WESTINGHOUSE ROAD

2020-41-SDP

G:\TXC\Projects\DHI_Communities\7616-00-Westinghouse\LD\01_CADD\01_Site\02_Site Plan\7616-C-SP-STORM SEWER PLAN.dwg Layout: 54 OVERALL STORM SEWER PLAN Plotted: 9/21/2020 9:53:35 AM

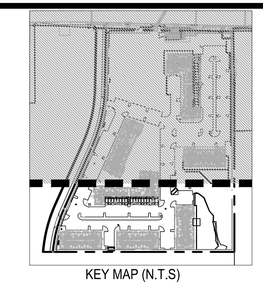

KEY MAP (N.T.S)

LEGEND

- PROPERTY BOUNDARY
- EXISTING MAJOR CONTOUR
- EXISTING MINOR CONTOUR
- PROPOSED MAJOR CONTOUR
- PROPOSED MINOR CONTOUR

REV	DESCRIPTION	DATE	APR

DESIGNED BY: JG
REVIEWED BY: BG
DRAWN BY: JG

BGE
BROWN & GAY ENGINEERS, INC.
1701 DIRECTORS BLVD, SUITE 1000
AUSTIN, TX 78731
TBPE Registration No. F-1046
TEL: 512-879-0400 www.brownjay.com

ASCEND WESTINGHOUSE GEORGETOWN, TEXAS

STORM SEWER PLAN – ENLARGED (1 OF 2)

THE LOCATION OF EXISTING UNDERGROUND UTILITIES ARE SHOWN IN AN APPROXIMATE WAY ONLY. THE CONTRACTOR SHALL DETERMINE THE EXACT LOCATIONS OF ALL EXISTING UTILITIES BEFORE COMMENCING WORK. HE WILL BE FULLY RESPONSIBLE FOR ANY AND ALL DAMAGES WHICH MIGHT BE OCCASIONED BY HIS FAILURE TO EXACTLY LOCATE ADN PRESERVE ANY AND ALL UNDERGROUND UTILITIES.

811 Know what's below. Call before you dig.

N

0 15' 30' 60'
SCALE: 1" = 30'

ADDRESS: 500 WESTINGHOUSE ROAD

STATE OF TEXAS
BRIAN J. GRACE
121846
LICENSED PROFESSIONAL ENGINEER
9/21/2020

SHEET 59 OF 76

2020-41-SDP

500 WESTINGHOUSE ROAD

G:\TXC\Projects\DHI_Communities\7616-00-Westinghouse\LD\01_CADD\01_Shts\02_Site Plan\7616-C-SP-STORM SEWER PLAN.dwg Layout: 55 STORM SEWER PLAN – ENLARGED (1 OF 2) Plotted: 9/21/2020 9:53:47 AM

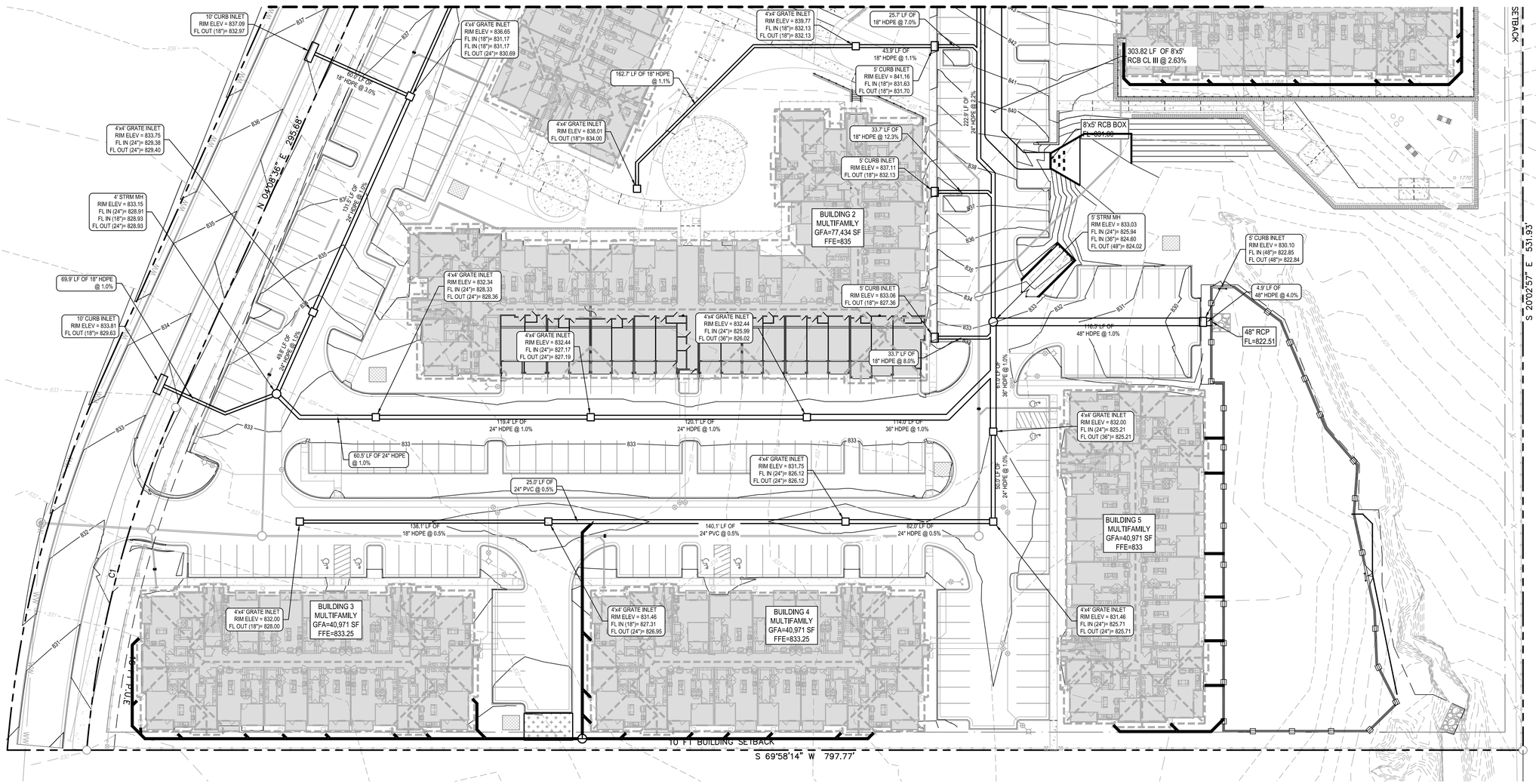

LEGEND

- PROPERTY BOUNDARY
- EXISTING MAJOR CONTOUR
- EXISTING MINOR CONTOUR
- PROPOSED MAJOR CONTOUR
- PROPOSED MINOR CONTOUR

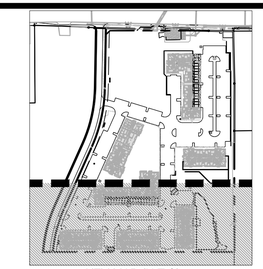

KEY MAP (N.T.S)

THE LOCATION OF EXISTING UNDERGROUND UTILITIES ARE SHOWN IN AN APPROXIMATE WAY ONLY. THE CONTRACTOR SHALL DETERMINE THE EXACT LOCATIONS OF ALL EXISTING UTILITIES BEFORE COMMENCING WORK. THE CONTRACTOR SHALL BE RESPONSIBLE FOR AVOIDING ALL DAMAGES WHICH MIGHT BE OCCASIONED BY HIS FAILURE TO EXACTLY LOCATE AND PRESERVE ANY AND ALL UNDERGROUND UTILITIES.

811 Know what's below. Call before you dig.

ADDRESS: 500 WESTINGHOUSE ROAD

REV	DESCRIPTION	DATE	APR

DESIGNED BY: JG
REVIEWED BY: BG
DRAWN BY: JG

BGE

BROWN & GAY ENGINEERS, INC.
1701 DIRECTORS BLVD, SUITE 1000
AUSTIN, TX 78731
TBPE Registration No. F-1046
TEL: 512-879-0400 www.brownjay.com

ASCEND WESTINGHOUSE
GEORGETOWN, TEXAS

STORM SEWER PLAN – ENLARGED (2 OF 2)

STATE OF TEXAS
BRIAN J. GRACE
121846
LICENSED PROFESSIONAL ENGINEER
9/21/2020

SHEET
60 OF 76

500 WESTINGHOUSE ROAD

2020-41-SDP

G:\TXC\Projects\DHI_Communities\7616-00-Westinghouse\LD\01_CADD\01_Shts\02_Site Plan\7616-C-SP-STORM SEWER PLAN.dwg Layout: 56 STORM SEWER PLAN – ENLARGED (2 OF 2) Plotted: 9/21/2020 9:54:01 AM

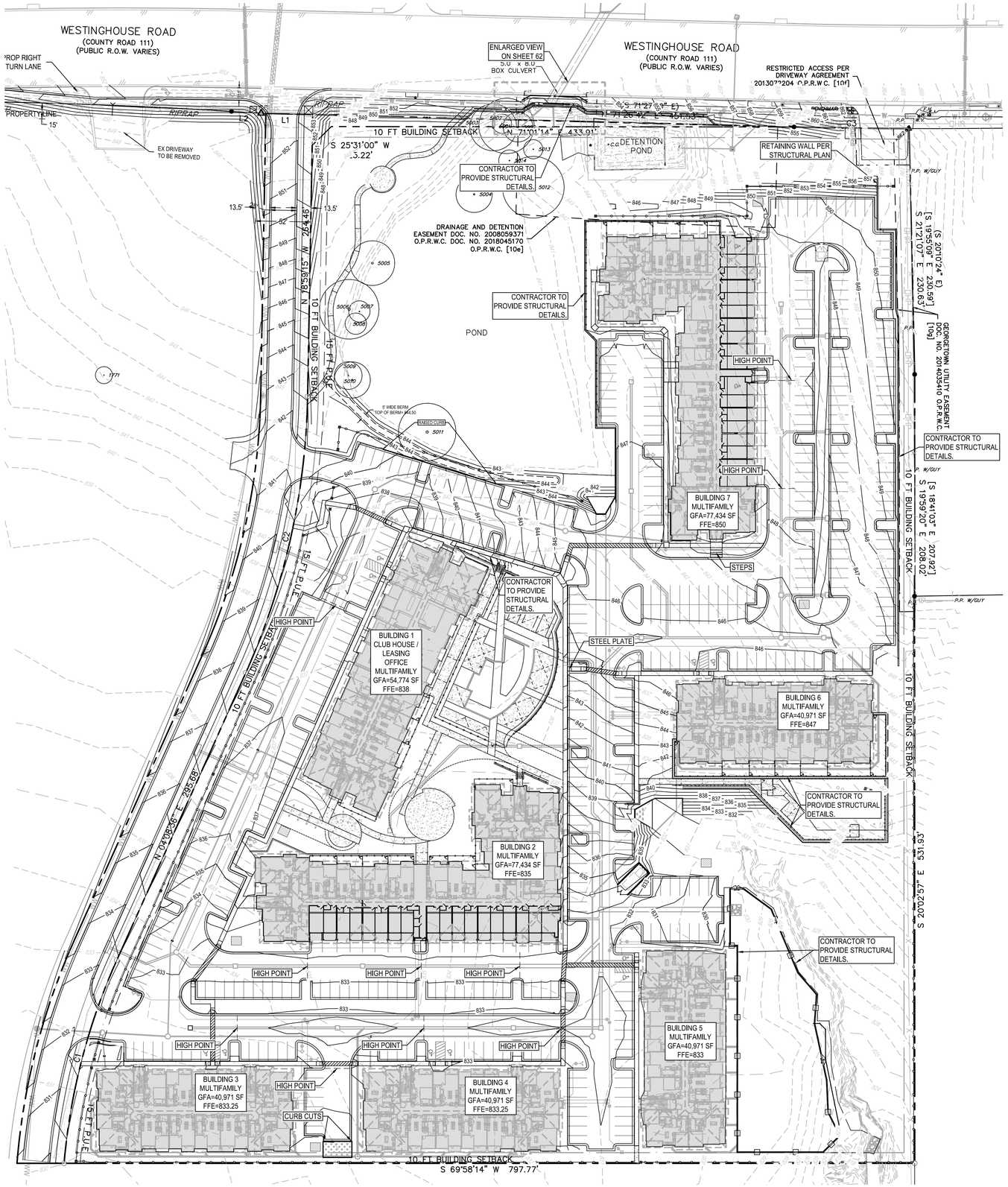

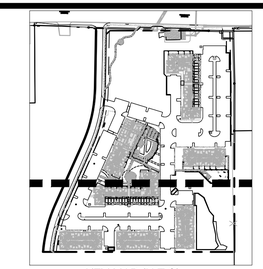

KEY MAP (N.T.S)

LEGEND

- PROPERTY BOUNDARY
- EXISTING MAJOR CONTOUR
- EXISTING MINOR CONTOUR
- PROPOSED MAJOR CONTOUR
- PROPOSED MINOR CONTOUR

N

0 25' 50' 100'

SCALE: 1" = 50'

ADDRESS: 500 WESTINGHOUSE ROAD

THE LOCATION OF EXISTING UNDERGROUND UTILITIES ARE SHOWN IN AN APPROXIMATE WAY ONLY. THE CONTRACTOR SHALL DETERMINE THE EXACT LOCATION OF ALL EXISTING UTILITIES BEFORE COMMENCING WORK. HE AGREES TO BE FULLY RESPONSIBLE FOR ANY AND ALL DAMAGES WHICH MIGHT BE OCCASIONED BY HIS FAILURE TO EXACTLY LOCATE ADN PRESERVE ANY AND ALL UNDERGROUND UTILITIES.

811 Know what's below. Call before you dig.

REV	DESCRIPTION	DATE	APR

DESIGNED BY: JG

REVIEWED BY: BG

DRAWN BY: JG

BGE

BROWN & GAY ENGINEERS, INC.
1701 DIRECTORS BLVD, SUITE 1000
AUSTIN, TX 78731
TBPE Registration No. F-1046
TEL: 512-879-0400 www.brownjgay.com

ASCEND WESTINGHOUSE
GEORGETOWN, TEXAS

OVERALL GRADING PLAN

STATE OF TEXAS
BRIAN J. GRACE
121846
LICENSED
PROFESSIONAL ENGINEER
9/21/2020

SHEET 61 OF 76

2020-41-SDP

500 WESTINGHOUSE ROAD

G:\TXC\Projects\DHL_Communities\7616-00-Westinghouse\LD\01_CADD\01_Shts\02_Site Plan\7616-C-SP-GRADING PLAN.dwg Layout: 57 OVERALL GRADING PLAN Plotted: 9/21/2020 9:54:52 AM

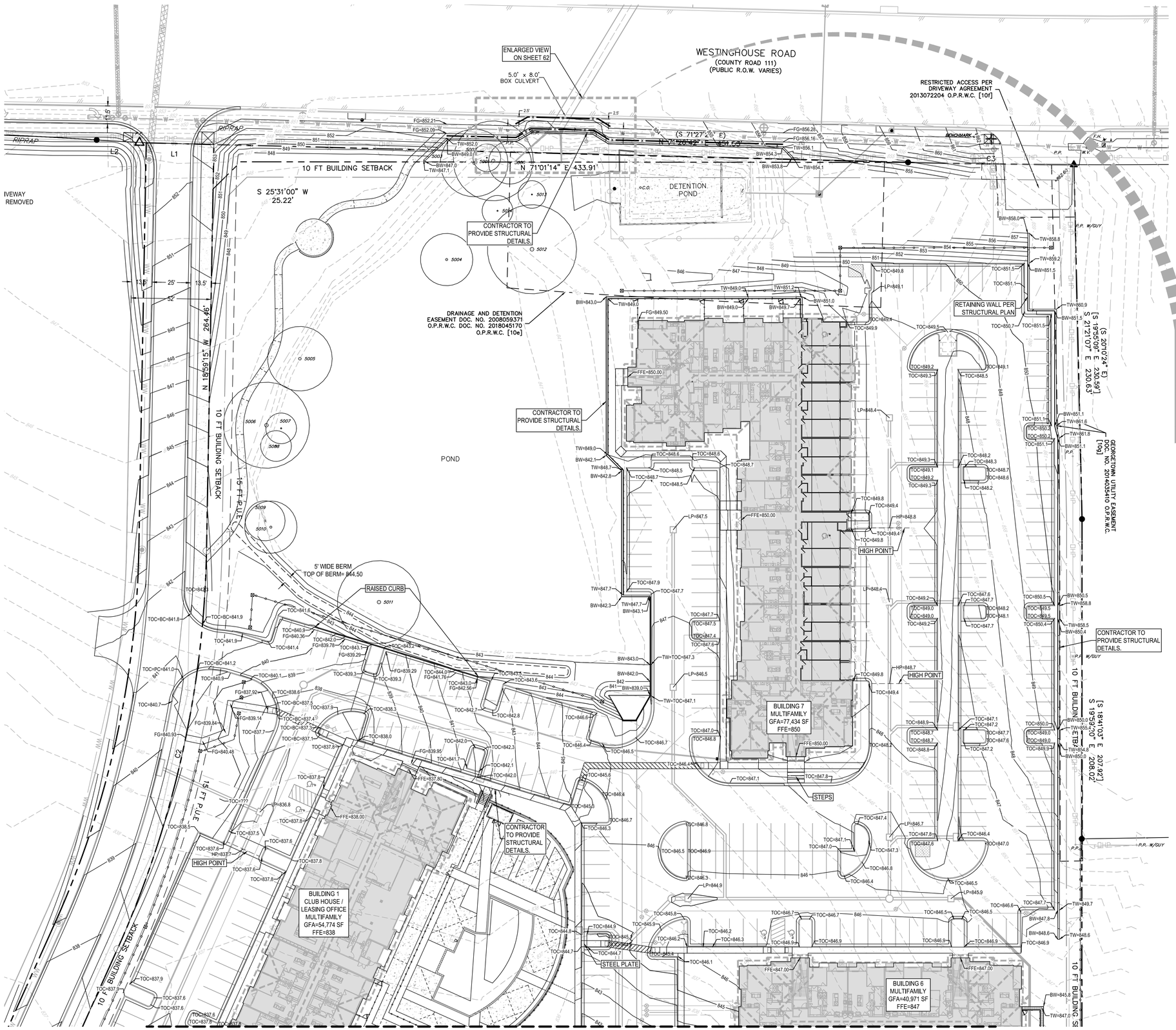

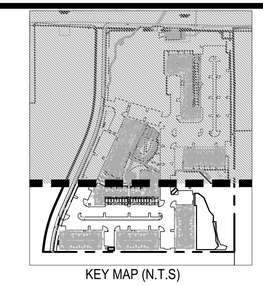

KEY MAP (N.T.S)

LEGEND

- PROPERTY BOUNDARY
- EXISTING MAJOR CONTOUR
- EXISTING MINOR CONTOUR
- PROPOSED MAJOR CONTOUR
- PROPOSED MINOR CONTOUR

ENLARGED VIEW

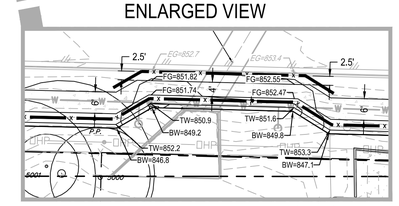

0 10' 20' 40'
SCALE: 1" = 20'

0 15' 30' 60'
SCALE: 1" = 30'

ADDRESS: 500 WESTINGHOUSE ROAD

THE LOCATION OF EXISTING UNDERGROUND UTILITIES ARE SHOWN IN AN APPROXIMATE WAY ONLY. THE CONTRACTOR SHALL DETERMINE THE EXACT LOCATIONS OF ALL EXISTING UTILITIES BEFORE COMMENCING WORK. HE WILL BE FULLY RESPONSIBLE FOR ANY AND ALL DAMAGES WHICH MIGHT BE OCCASIONED BY HIS FAILURE TO EXACTLY LOCATE ADN PRESERVE ANY AND ALL UNDERGROUND UTILITIES.

811 Know what's below. Call before you dig.

REV	DESCRIPTION	DATE	APR

DESIGNED BY: JG
REVIEWED BY: BG
DRAWN BY: JG

BGE

BROWN & GAY ENGINEERS, INC.
1701 DIRECTORS BLVD, SUITE 1000
AUSTIN, TX 78731
TBPE Registration No. F-1046
TEL: 512-879-0400 www.brownjgay.com

ASCEND WESTINGHOUSE
GEORGETOWN, TEXAS

GRADING PLAN – ENLARGED (1 OF 2)

STATE OF TEXAS
BRIAN J. GRACE
121846
LICENSED PROFESSIONAL ENGINEER
9/21/2020

SHEET 62 OF 76

500 WESTINGHOUSE ROAD

2020-41-SDP

G:\TXC\Projects\DHI_Communities\7616-00-Westinghouse\LD\01_CADD\01_Shts\02_Site Plan\7616-C-SP-GRADING PLAN.dwg Layout: 38 GRADING PLAN - ENLARGED (1 OF 2) Plotted: 9/21/2020 9:55:12 AM

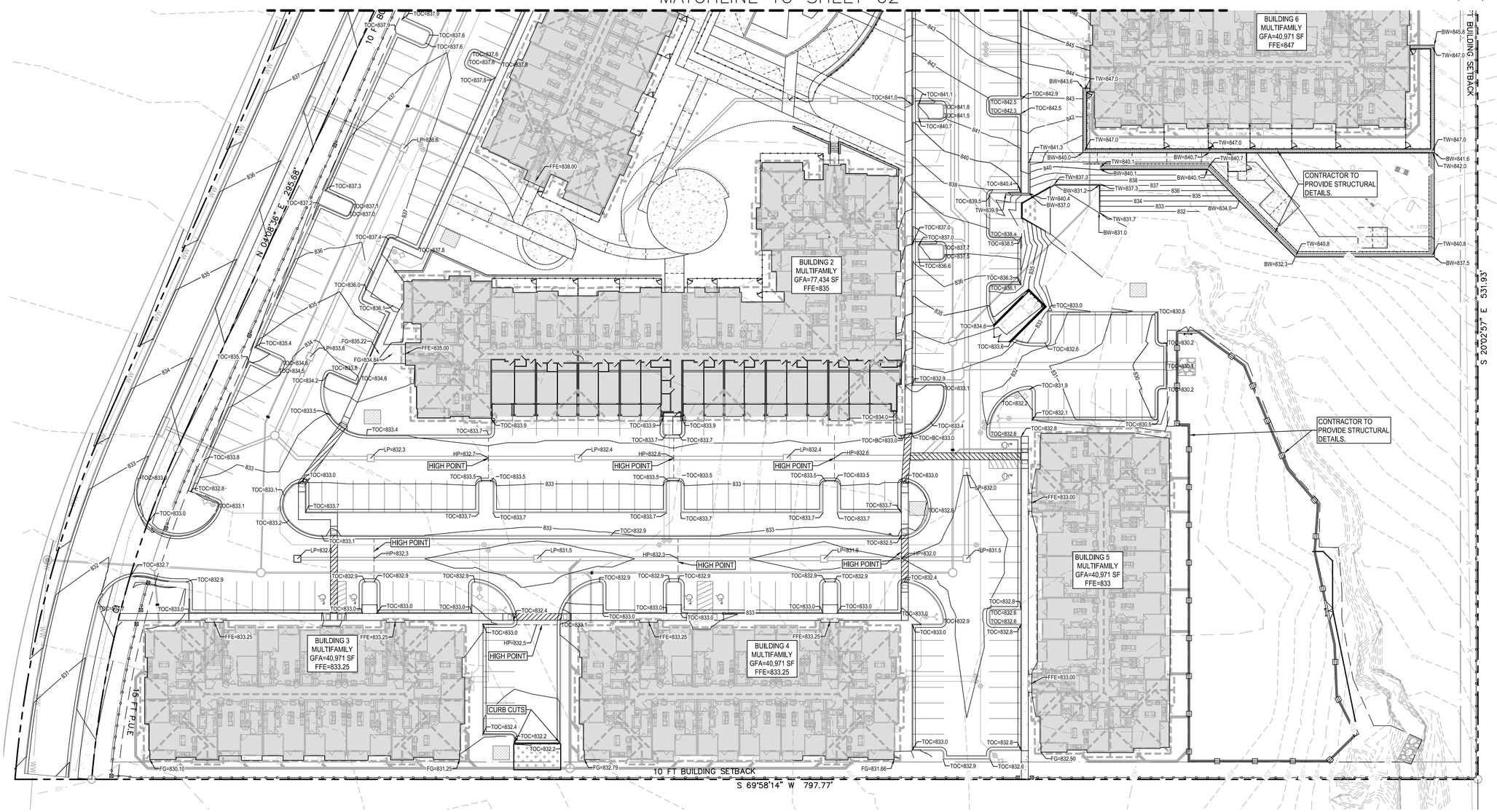

LEGEND

- PROPERTY BOUNDARY
- EXISTING MAJOR CONTOUR
- EXISTING MINOR CONTOUR
- PROPOSED MAJOR CONTOUR
- PROPOSED MINOR CONTOUR

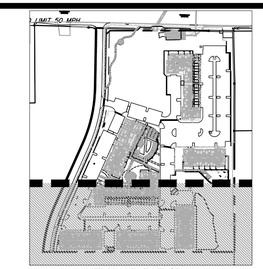

KEY MAP (N.T.S)

THE LOCATION OF EXISTING UNDERGROUND UTILITIES ARE SHOWN IN AN APPROXIMATE WAY ONLY. THE CONTRACTOR SHALL DETERMINE THE EXACT LOCATIONS OF ALL EXISTING UTILITIES BEFORE COMMENCING WORK. THE CONTRACTOR SHALL BE FULLY RESPONSIBLE FOR ANY AND ALL DAMAGES WHICH MIGHT BE OCCASIONED BY HIS FAILURE TO EXACTLY LOCATE ADN PRESERVE ANY AND ALL UNDERGROUND UTILITIES.

811 Know what's below. Call before you dig.

N

0 15' 30' 60'
SCALE: 1" = 30'

ADDRESS: 500 WESTINGHOUSE ROAD

REV	DESCRIPTION	DATE	APR

DESIGNED BY: JG
REVIEWED BY: BG
DRAWN BY: JG

BGE

BROWN & GAY ENGINEERS, INC.
1701 DIRECTORS BLVD, SUITE 1000
AUSTIN, TX 78731
TBPE Registration No. F-1046
TEL: 512-879-0400 www.brownjgay.com

ASCEND WESTINGHOUSE
GEORGETOWN, TEXAS

GRADING PLAN – ENLARGED (2 OF 2)

STATE OF TEXAS
BRIAN J. GRACE
121846
LICENSED PROFESSIONAL ENGINEER
9/21/2020

500 WESTINGHOUSE ROAD

2020-41-SDP

G:\TXC\Projects\DHI_Communities\7616-00-Westinghouse\LD\01_CADD\01_Shts\02_Site Plan\7616-C-SP-GRADING PLAN.dwg Layout: 39 GRADING PLAN - ENLARGED (2 OF 2) Plotted: 9/21/2020 9:55:26 AM

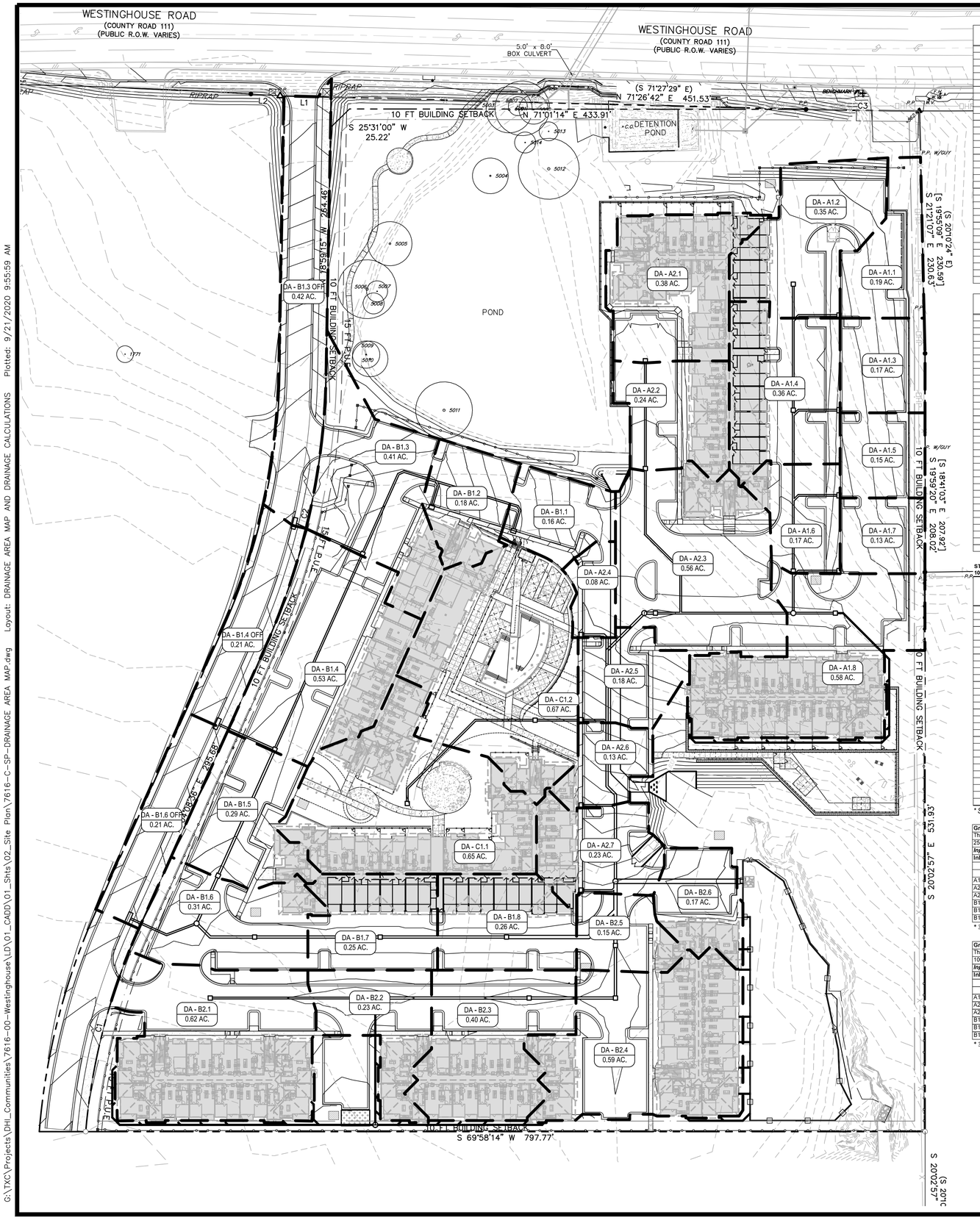

DRAINAGE AREA	AREA (acres)	COMPOSITE C C_{25}	COMPOSITE C C_{100}	$A \cdot C_{25}$	$A \cdot C_{100}$	Tc (min)	INTENSITY I 25yr (in/hr)	INTENSITY I 100yr (in/hr)	DISCHARGE Q 25 (cfs)	DISCHARGE Q 100 (cfs)
A1.1	0.19	0.67	0.70	0.13	0.13	5.00	9.8	11.9	1.25	1.57
A1.2	0.35	0.80	0.82	0.28	0.29	5.00	9.8	11.9	2.76	3.40
A1.3	0.17	0.74	0.82	0.13	0.14	5.00	9.8	11.9	1.2	1.7
A1.4	0.36	0.79	0.88	0.28	0.32	5.00	9.8	11.9	2.8	3.7
A1.5	0.15	0.72	0.81	0.11	0.12	5.00	9.8	11.9	1.1	1.4
A1.6	0.17	0.72	0.80	0.12	0.14	5.00	9.8	11.9	1.2	1.6
A1.7	0.13	0.71	0.80	0.09	0.10	5.00	9.8	11.9	0.9	1.2
A1.8	0.58	0.80	0.88	0.46	0.51	5.00	9.8	11.9	4.5	6.1
A2.1	0.38	0.84	0.93	0.32	0.35	5.00	9.8	11.9	3.1	4.2
A2.2	0.24	0.82	0.91	0.20	0.22	5.00	9.8	11.9	1.9	2.6
A2.3	0.56	0.81	0.89	0.45	0.50	5.00	9.8	11.9	4.4	5.9
A2.4	0.08	0.75	0.84	0.06	0.07	5.00	9.8	11.9	0.6	0.8
C1.1	0.65	0.70	0.79	0.46	0.51	5.00	9.8	11.9	4.5	6.1
C1.2	0.70	0.64	0.72	0.45	0.50	5.00	9.8	11.9	4.4	6.0
A2.5	0.18	0.71	0.80	0.13	0.14	5.00	9.8	11.9	1.3	1.7
A2.6	0.13	0.86	0.95	0.11	0.12	5.00	9.8	11.9	1.1	1.5
A2.7	0.23	0.84	0.92	0.19	0.21	5.00	9.8	11.9	1.9	2.5
B1.1	0.16	0.75	0.83	0.12	0.13	5.00	9.8	11.9	1.2	1.6
B1.2	0.18	0.81	0.90	0.15	0.16	5.00	9.8	11.9	1.4	1.9
B1.3	0.41	0.66	0.75	0.27	0.31	5.00	9.8	11.9	2.7	3.6
B1.3-OFF	0.42	0.75	0.84	0.31	0.35	5.00	9.8	11.9	3.1	4.2
B1.4	0.53	0.74	0.82	0.39	0.44	5.00	9.8	11.9	3.8	5.2
B1.4-OFF	0.21	0.72	0.81	0.15	0.17	5.00	9.8	11.9	1.5	2.0
B1.5	0.29	0.73	0.82	0.21	0.24	5.00	9.8	11.9	2.1	2.8
B1.6	0.31	0.72	0.81	0.22	0.25	5.00	9.8	11.9	2.2	3.0
B1.6-OFF	0.21	0.73	0.81	0.15	0.17	6.00	9.5	11.5	1.4	2.0
B1.7	0.25	0.85	0.94	0.21	0.23	5.00	9.8	11.9	2.1	2.8
B1.8	0.26	0.86	0.95	0.22	0.25	5.00	9.8	11.9	2.2	2.9
B2.1	0.62	0.82	0.91	0.51	0.56	5.00	9.8	11.9	5.0	6.7
B2.2	0.23	0.75	0.83	0.17	0.19	5.00	9.8	11.9	1.7	2.3
B2.3	0.40	0.79	0.88	0.32	0.35	5.00	9.8	11.9	3.1	4.2
B2.4	0.59	0.83	0.92	0.49	0.54	5.00	9.8	11.9	4.8	6.5
B2.5	0.15	0.78	0.86	0.12	0.13	5.00	9.8	11.9	1.1	1.5
B2.6	0.17	0.81	0.90	0.14	0.15	5.00	9.8	11.9	1.4	1.8

DRAINAGE AREA	AREA (acres)	COMPOSITE C C_{25}	COMPOSITE C C_{100}	$A \cdot C_{25}$	$A \cdot C_{100}$	Tc (min)	INTENSITY I 25yr (in/hr)	INTENSITY I 100yr (in/hr)	DISCHARGE Q 25 (cfs)	DISCHARGE Q 100 (cfs)
A1.1	0.19	0.67	0.70	0.13	0.13	5.00	9.8	11.9	1.25	1.57
A1.2	0.35	0.80	0.82	0.28	0.29	5.00	9.8	11.9	2.76	3.40
A1.3	0.17	0.74	0.82	0.13	0.14	5.00	9.8	11.9	1.2	1.7
A1.4	0.36	0.79	0.88	0.28	0.32	5.00	9.8	11.9	2.8	3.7
A1.5	0.15	0.72	0.81	0.11	0.12	5.00	9.8	11.9	1.1	1.4
A1.6	0.17	0.72	0.80	0.12	0.14	5.00	9.8	11.9	1.2	1.6
A1.7	0.13	0.71	0.80	0.09	0.10	5.00	9.8	11.9	0.9	1.2
A1.8	0.58	0.80	0.88	0.46	0.51	5.00	9.8	11.9	4.5	6.1
A2.1	0.38	0.84	0.93	0.32	0.35	5.00	9.8	11.9	3.1	4.2
A2.2	0.24	0.82	0.91	0.20	0.22	5.00	9.8	11.9	1.9	2.6
A2.3	0.56	0.81	0.89	0.45	0.50	5.00	9.8	11.9	4.4	5.9
A2.4	0.08	0.75	0.84	0.06	0.07	5.00	9.8	11.9	0.6	0.8
C1.1	0.65	0.70	0.79	0.46	0.51	5.00	9.8	11.9	4.5	6.1
C1.2	0.70	0.64	0.72	0.45	0.50	5.00	9.8	11.9	4.4	6.0
A2.5	0.18	0.71	0.80	0.13	0.14	5.00	9.8	11.9	1.3	1.7
A2.6	0.13	0.86	0.95	0.11	0.12	5.00	9.8	11.9	1.1	1.5
A2.7	0.23	0.84	0.92	0.19	0.21	5.00	9.8	11.9	1.9	2.5
B1.1	0.16	0.75	0.83	0.12	0.13	5.00	9.8	11.9	1.2	1.6
B1.2	0.18	0.81	0.90	0.15	0.16	5.00	9.8	11.9	1.4	1.9
B1.3	0.41	0.66	0.75	0.27	0.31	5.00	9.8	11.9	2.7	3.6
B1.3-OFF	0.42	0.75	0.84	0.31	0.35	5.00	9.8	11.9	3.1	4.2
B1.4	0.53	0.74	0.82	0.39	0.44	5.00	9.8	11.9	3.8	5.2
B1.4-OFF	0.21	0.72	0.81	0.15	0.17	5.00	9.8	11.9	1.5	2.0
B1.5	0.29	0.73	0.82	0.21	0.24	5.00	9.8	11.9	2.1	2.8
B1.6	0.31	0.72	0.81	0.22	0.25	5.00	9.8	11.9	2.2	3.0
B1.6-OFF	0.21	0.73	0.81	0.15	0.17	6.00	9.5	11.5	1.4	2.0
B1.7	0.25	0.85	0.94	0.21	0.23	5.00	9.8	11.9	2.1	2.8
B1.8	0.26	0.86	0.95	0.22	0.25	5.00	9.8	11.9	2.2	2.9
B2.1	0.62	0.82	0.91	0.51	0.56	5.00	9.8	11.9	5.0	6.7
B2.2	0.23	0.75	0.83	0.17	0.19	5.00	9.8	11.9	1.7	2.3
B2.3	0.40	0.79	0.88	0.32	0.35	5.00	9.8	11.9	3.1	4.2
B2.4	0.59	0.83	0.92	0.49	0.54	5.00	9.8	11.9	4.8	6.5
B2.5	0.15	0.78	0.86	0.12	0.13	5.00	9.8	11.9	1.1	1.5
B2.6	0.17	0.81	0.90	0.14	0.15	5.00	9.8	11.9	1.4	1.8

STREET FLOW AND INLET CALCULATIONS
100 YEAR STORM

Inlet No.	Inlet Type	Drainage Area	Q 100 (cfs)	Q pass (cfs)	Q total (cfs)	Qtotal (cfs)	CURB (with Depression) Length (ft)	d (ft)	d (ft) (d ≥ h + a)	SUMP INLET CAPACITY GRATE (with 50% clogging) P (ft)	A (open) (sf)	h (ft)	Qweir (cfs)	Qorifice (cfs)
A1.1	S-1	0.19	1.6		1.6	1.6	5	0.20	0.20					
A1.2	S-2	0.35	3.4		3.4	3.4				17.60	15.06	0.50	9.33	-
A1.3	S-1	0.17	1.7		1.7	1.7	5	0.21	0.21					
A1.4	S-2	0.36	3.7		3.7	3.7				17.60	15.06	0.50	9.33	-
A1.5	S-1	0.15	1.4		1.4	1.4	5	0.19	0.19					
A1.7	S-1	0.13	1.2		1.2	1.2	5	0.17	0.17					
A1.8	S-2	0.58	6.1	0.39	6.5	6.5				17.60	15.06	0.50	9.33	-
A2.3	S-2	0.56	5.9	1.54	7.5	7.5				17.60	15.06	0.50	9.33	-
A2.4	S-1	0.08	0.8		0.8	0.8	5	0.13	0.13					
C1.1	S-2	0.65	6.1		6.1	6.1				17.60	15.06	0.50	9.33	-
C1.2	S-2	0.70	6.0		6.0	6.0				17.60	15.06	0.50	9.33	-
A2.5	S-1	0.18	1.7		1.7	1.7	5	0.21	0.21					
A2.6	S-1	0.13	1.5		1.5	1.5	5	0.19	0.19					
A2.7	S-1	0.23	2.5		2.5	2.5	5	0.27	0.27					
B1.1	S-1	0.16	1.6		1.6	1.6	5	0.20	0.20					
B1.2	S-1	0.18	1.9		1.9	1.9	5	0.23	0.23					
B1.3-OFF	S-1	0.42	4.2		4.2	4.2	10	0.27	0.27					
B1.4-OFF	S-1	0.21	2.0		2.0	2.0	10	0.17	0.17					
B1.5	S-2	0.31	3.0	2.27	5.2	5.2				17.60	15.06	0.50	9.33	-
B1.6-OFF	S-1	0.21	2.0		2.0	2.0	10	0.17	0.17					
B1.7	S-2	0.25	2.8		2.8	2.8				17.60	15.06	0.50	9.33	-
B1.8	S-2	0.26	2.9		2.9					17.60	15.06	0.50	9.33	-
B2.1	S-2	0.62	6.7		6.7	6.7				17.60	15.06	0.50	9.33	-
B2.2	S-2	0.23	2.3		2.3					17.60	15.06	0.50	9.33	-
B2.3	S-2	0.40	4.2		4.2	4.2				17.60	15.06	0.50	9.33	-
B2.4	S-2	0.59	6.5		6.5	6.5				17.60	15.06	0.50	9.33	-
B2.5	S-2	0.15	1.5		1.5	1.5				17.60	15.06	0.50	9.33	-
B2.6	S-1	0.17	1.8		1.8	1.8	5	0.22	0.22					

* SEE GRATE INTERCEPTION CALCULATOR TABLE FOR DRAINAGE AREA A1.6, A2.1, A2.2, B1.3, B1.4, & B1.5

STREET FLOW AND INLET CALCULATIONS
25 YEAR STORM

Inlet No.	Inlet Type	Drainage Area	Q 25 (cfs)	Q pass (cfs)	Q total (cfs)	CURB (with Depression) Length (ft)	d (ft)	d (ft) (d ≥ h + a)	SUMP INLET CAPACITY GRATE (with 50% clogging) P (ft)	A (open) (sf)	h (ft)	Qweir (cfs)	Qorifice (cfs)
A1.1	S-1	0.19	1.2		1.2	5	0.17	0.17					
A1.2	S-2	0.35	2.8		2.8				17.60	15.06	0.50	9.33	-
A1.3	S-1	0.17	1.2		1.2	5	0.17	0.17					
A1.4	S-2	0.36	2.8		2.8				17.60	15.06	0.50	9.33	-
A1.5	S-1	0.15	1.1		1.1	5	0.15	0.15					
A1.7	S-1	0.13	0.9		0.9	5	0.14	0.14					
A1.8	S-2	0.58	4.5	0.24	4.8				17.60	15.06	0.50	9.33	-
A2.3	S-2	0.56	4.4	0.51	5.0				17.60	15.06	0.50	9.33	-
A2.4	S-1	0.08	0.6		0.6	5	0.10	0.10					
C1.1	S-2	0.65	4.5		4.5				17.60	15.06	0.50	9.33	-
C1.2	S-2	0.70	4.4		4.4				17.60	15.06	0.50	9.33	-
A2.5	S-1	0.18	1.3		1.3	5	0.17	0.17					
A2.6	S-1	0.13	1.1		1.1	5	0.16	0.16					
A2.7	S-1	0.23	1.9		1.9	5	0.23	0.23					
B1.1	S-1	0.16	1.2		1.2	5	0.16	0.16					
B1.2	S-1	0.18	1.4		1.4	5	0.19	0.19					
B1.3-OFF	S-1	0.42	3.1		3.1	10	0.22	0.22					
B1.4-OFF	S-1	0.21	1.5		1.5	10	0.14	0.14					
B1.5	S-2	0.31	2.2	0.55	2.8				17.60	15.06	0.50	9.33	-
B1.6-OFF	S-1	0.21	1.4		1.4	10	0.14	0.14					
B1.7	S-2	0.25	2.1		2.1				17.60	15.06	0.50	9.33	-
B1.8	S-2	0.26	2.2		2.2				17.60	15.06	0.50	9.33	-
B2.1	S-2	0.62	5.0		5.0				17.60	15.06	0.50	9.33	-
B2.2	S-2	0.23	1.7		1.7				17.60	15.06	0.50	9.33	-
B2.3	S-2	0.40	3.1		3.1				17.60	15.06	0.50	9.33	-
B2.4	S-2	0.59	4.8		4.8				17.60	15.06	0.50	9.33	-
B2.5	S-2	0.15	1.1		1.1				17.60	15.06	0.50	9.33	-
B2.6	S-1	0.17	1.4		1.4	5	0.18	0.18	17.60	15.06	0.50	9.33	-

* SEE GRATE INTERCEPTION CALCULATOR TABLE FOR DRAINAGE AREA A1.6, A2.1, A2.2, B1.3, B1.4, & B1.5

Grate Interception Calculator per HEC-22
This calculation assumes an inverted crown roadway.
25-Year

Inlet	Q	So	Street width	Street depth	Sx	No. Inlets	*Grate width	*Grate length	n	d	T	A	P	Q	dQ	new d	v	Eo	Qw	Qs	Ku	L	vo	Rf	Ku	Rs	E	Qi	Q bypass	Pass To
									Spread of flow iteration								Frontal and Side Flows				Frontal interception efficency				Side interceptio Inlet efficency and capture					
	cfs		ft	in			ft	ft		ft	ft	sf	ft	cfs	cfs	ft	fps		cfs	cfs		ft	fps						cfs	cfs	
A1.6	1.20	2.50%	26	4	2.56%	1	3.22	3.22	0.016	0.12	9.18	0.54	9.19	1.20	0.00	0.12	2.22	0.68	0.82	0.38	0.09	3.22	10.46	1.00	0.15	0.37	0.80	0.96	**0.24**	A1.8
A2.1	3.13	1.50%	26	4	2.56%	1	3.22	3.22	0.016	0.19	14.47	1.34	14.48	3.13	0.00	0.19	2.33	0.49	1.53	1.60	0.09	3.22	10.46	1.00	0.15	0.35	0.67	2.10	**1.03**	A2.2
A2.2	1.94	1.50%	26	4	2.56%	1	3.22	3.22	0.016	0.16	12.11	0.94	12.11	1.94	0.00	0.16	2.07	0.56	1.09	0.85	0.09	3.22	10.46	1.00	0.15	0.40	0.74	1.44	**0.51**	A2.3
B1.3	2.68	1.25%	26	4	2.56%	1	3.22	3.22	0.016	0.18	14.12	1.28	14.13	2.68	0.00	0.18	2.09	0.50	1.33	1.34	0.09	3.22	10.46	1.00	0.15	0.40	0.70	1.87	**0.80**	B1.4
B1.4	3.85	1.25%	26	4	2.56%	1	3.22	3.22	0.016	0.21	16.18	1.68	16.19	3.85	0.00	0.21	2.29	0.45	1.72	2.13	0.09	3.22	10.46	1.00	0.15	0.36	0.65	2.49	**1.36**	B1.5
B1.5	2.09	1.25%	26	4	2.56%	1	3.22	3.22	0.016	0.16	12.87	1.06	12.87	2.09	0.00	0.16	1.97	0.54	1.12	0.97	0.09	3.22	10.46	1.00	0.15	0.43	0.73	1.53	**0.55**	B1.6

* 35% CLOGGING FACTOR APPLIED TO AREA OF GRATE

Grate Interception Calculator per HEC-22
This calculation assumes an inverted crown roadway.
100-Year

Inlet	Q	So	Street width	Street depth	Sx	No. Inlets	*Grate width	*Grate length	n	d	T	A	P	Q	dQ	new d	v	Eo	Qw	Qs	Ku	L	vo	Rf	Ku	Rs	E	Qi	Q bypass	Pass To
									Spread of flow iteration								Frontal and Side Flows				Frontal interception efficency				Side interceptio Inlet efficency and capture					
	cfs		ft	in			ft	ft		ft	ft	sf	ft	cfs	cfs	ft	fps		cfs	cfs		ft	fps						cfs	cfs	
A1.6	1.62	2.50%	26	4	2.56%	1	3.22	3.22	0.016	0.13	10.28	0.68	10.28	1.62	0.00	0.13	2.39	0.63	1.03	0.59	0.09	3.22	10.46	1.00	0.15	0.34	0.76	1.23	**0.39**	A1.8
A2.1	4.18	1.50%	26	4	2.56%	1	3.22	3.22	0.016	0.21	16.13	1.67	16.14	4.18	0.00	0.21	2.51	0.45	1.87	2.31	0.09	3.22	10.46	1.00	0.15	0.33	0.63	2.62	**1.56**	A2.2
A2.2	4.16	1.50%	26	4	2.56%	1	3.22	3.22	0.016	0.21	16.10	1.66	16.10	4.16	0.00	0.21	2.50	0.45	1.87	2.29	0.09	3.22	10.46	1.00	0.15	0.33	0.63	2.61	**1.54**	A2.3
B1.3	3.63	1.25%	26	4	2.56%	1	3.22	3.22	0.016	0.20	15.84	1.61	15.84	3.63	0.00	0.20	2.26	0.45	1.65	1.98	0.09	3.22	10.46	1.00	0.15	0.37	0.66	2.38	**1.25**	B1.4
B1.4	6.44	1.25%	26	4	2.56%	1	3.22	3.22	0.016	0.25	19.63	2.47	19.63	6.44	0.00	0.25	2.61	0.38	2.45	3.99	0.09	3.22	10.46	1.00	0.15	0.31	0.57	3.68	**2.75**	B1.5
B1.5	5.57	1.25%	26	4	2.56%	1	3.22	3.22	0.016	0.24	18.59	2.22	18.59	5.57	0.00	0.24	2.51	0.40	2.22	3.35	0.09	3.22	10.46	1.00	0.15	0.32	0.59	3.30	**2.27**	B1.6

* 35% CLOGGING FACTOR APPLIED TO AREA OF GRATE

0 25' 50' 100'
SCALE: 1" = 50'

LEGEND

- PROPERTY BOUNDARY
- EXISTING MAJOR CONTOUR
- EXISTING MINOR CONTOUR
- PROPOSED MAJOR CONTOUR
- PROPOSED MINOR CONTOUR
- FLOW ARROW
- DRAINAGE DIVIDE
- DA-XX / XX A.C. — INLET ID / DRAINAGE AREA

NOTES:
1. REFER TO DRAINAGE AREA CALCULATIONS SHEET FOR DRAINAGE AREA INFORMATION.

ADDRESS: 500 WESTINGHOUSE ROAD

Know what's below. Call before you dig.

THE LOCATION OF EXISTING UNDERGROUND UTILITIES ARE SHOWN IN AN APPROXIMATE WAY ONLY. THE CONTRACTOR SHALL DETERMINE THE EXACT LOCATION OF ALL EXISTING UTILITIES BEFORE COMMENCING WORK. HE AGREES TO BE FULLY RESPONSIBLE FOR ANY AND ALL DAMAGES WHICH MIGHT BE OCCASIONED BY HIS FAILURE TO EXACTLY LOCATE ADN PRESERVE ANY AND ALL UNDERGROUND UTILITIES.

REV	DESCRIPTION	DATE	APR

DESIGNED BY: JG
REVIEWED BY: BG
DRAWN BY: JG

BGE
BROWN & GAY ENGINEERS, INC.
1701 DIRECTORS BLVD, SUITE 1000
AUSTIN, TX 78731
TBPE Registration No. F-1046
TEL: 512-879-0400 www.brownjgay.com

500 WESTINGHOUSE ROAD

ASCEND WESTINGHOUSE
GEORGETOWN, TEXAS

DRAINAGE AREA MAP AND DRAINAGE CALCULATIONS

STATE OF TEXAS
BRIAN J. GRACE
121846
LICENSED PROFESSIONAL ENGINEER
9/21/2020

2020-41-SDP

SHEET 64 OF 76

G:\TXC\Projects\DHI_Communities\7616-00-Westinghouse\LD\01_CADD\01_Shts\02_Site Plan\7616-C-SP-DRAINAGE AREA MAP.dwg Layout: DRAINAGE AREA MAP AND DRAINAGE CALCULATIONS Plotted: 9/21/2020 9:55:59 AM

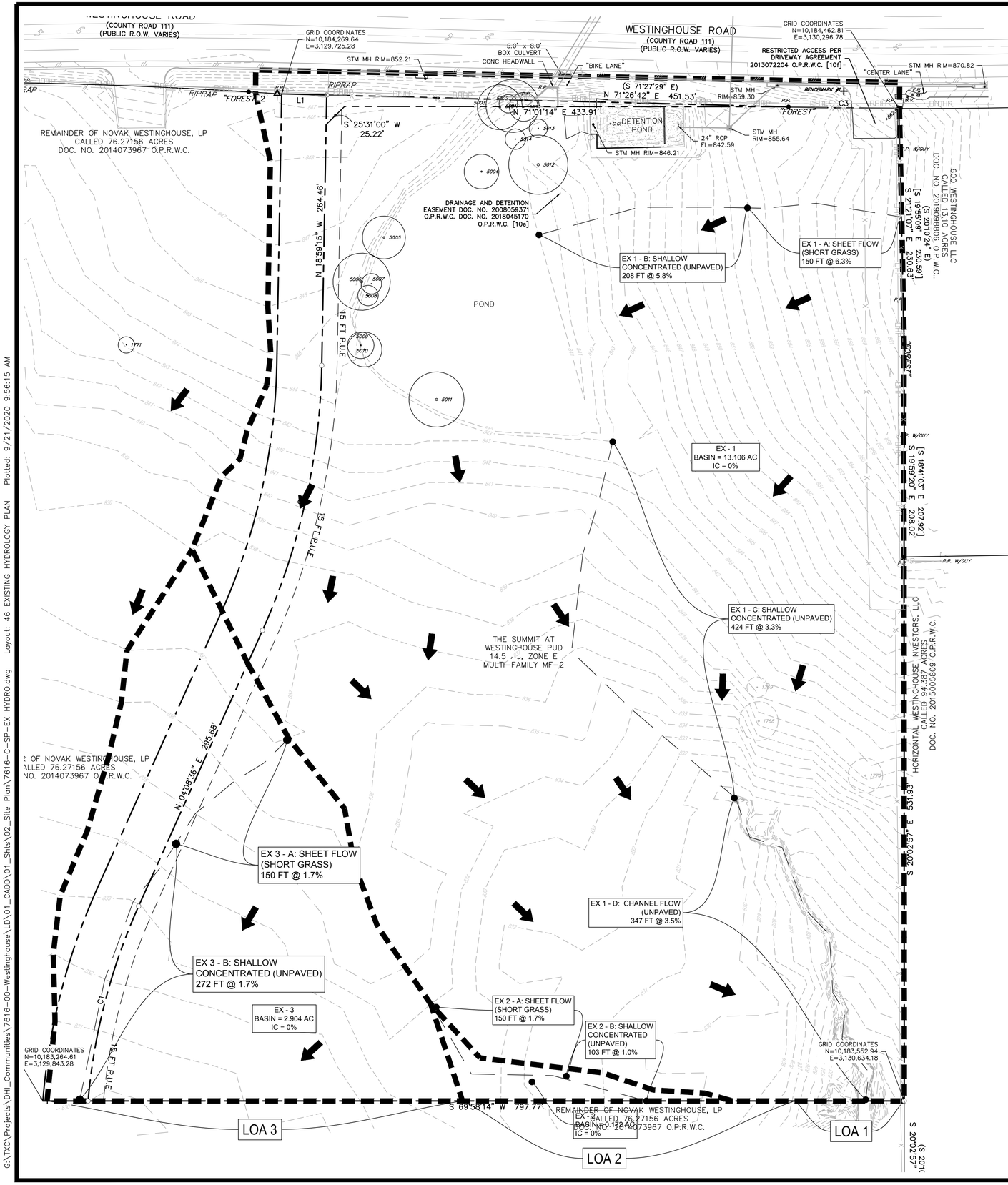

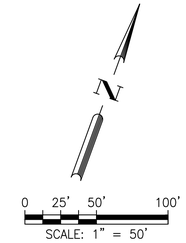

LEGEND

- PROPERTY BOUNDARY
- EXISTING MAJOR CONTOUR
- EXISTING MINOR CONTOUR
- PROPOSED MAJOR CONTOUR
- PROPOSED MINOR CONTOUR
- FLOW ARROW
- DRAINAGE DIVIDE
- DA-XX / XX A.C. — INLET ID / DRAINAGE AREA

NOTES:
1. REFER TO DRAINAGE AREA CALCULATIONS SHEET FOR DRAINAGE AREA INFORMATION.

WORKSHEET FOR SCS HYDROLOGIC PARAMETERS

Site Conditions:	X	Existing	Project: Westinghouse
		Proposed	Subarea Number: EX LOA 1
Off-Site Land Use:		Existing	By: IL
		Proposed	Date: 03/10/2020

RUNOFF CURVE NUMBER

Soil Group	Land Use or Zoning	Area (acres)	RCN	RCN x Area
D	EX 1 - Open Space - Good Condition	13.11	80	1048.5

Total Area 13.106 ac 0.020478 sq. mi **Weighted RCN =** 80.0

TIME OF CONCENTRATION

ID	Type of Flow	n	Length (ft)	Slope (ft/ft)	Area (sf)	Wet P (ft)	Velocity (fps)	Tt (min)
Sheet Flow (P_2= 4.20 in.)								
EX 1 - A	Grass	0.15	150	0.063	$T_t = \frac{0.42\,(nL)^{0.8}}{(P_2)^{0.5}\,S^{0.4}}$			7.46
								0.00
								0.00
								0.00
Shallow Concentrated Flow								
EX 1 - B	Unpaved		208	0.058	Tt= L (unpaved)			0.89
EX 1 - C	Unpaved		424	0.033	60*16.1345*S0.5			2.41
					Tt= L (paved)			0.00
					60*20.3282*S0.5			0.00
Channel Flow								Tt=Σ(L/60V)
EX 1 - D		Channel	347	0.035			3.92	1.48
							Total T_c	12.24
							Total T_L	7.34

WORKSHEET FOR SCS HYDROLOGIC PARAMETERS

Site Conditions:	X	Existing	Project: Westinghouse
		Proposed	Subarea Number: EX LOA 3
Off-Site Land Use:		Existing	By: IL
		Proposed	Date: 03/10/2020

RUNOFF CURVE NUMBER

Soil Group	Land Use or Zoning	Area (acres)	RCN	RCN x Area
D	EX 3 - Open Space - Good Condition	2.90	80	232.4

Total Area 2.904 ac 0.004538 sq. mi **Weighted RCN =** 80.0

TIME OF CONCENTRATION

ID	Type of Flow	n	Length (ft)	Slope (ft/ft)	Area (sf)	Wet P (ft)	Velocity (fps)	Tt (min)
Sheet Flow (P_2= 4.20 in.)								
EX 3 - A	Grass	0.15	150	0.017	$T_t = \frac{0.42\,(nL)^{0.8}}{(P_2)^{0.5}\,S^{0.4}}$			12.72
								0.00
								0.00
								0.00
Shallow Concentrated Flow								
EX 3 - B	Unpaved		272	0.017	Tt= L (unpaved)			2.18
					60*16.1345*S0.5			0.00
					Tt= L (paved)			0.00
					60*20.3282*S0.5			0.00
							Total T_c	14.91
							Total T_L	8.95

WORKSHEET FOR SCS HYDROLOGIC PARAMETERS

Site Conditions:	X	Existing	Project: Westinghouse
		Proposed	Subarea Number: EX LOA 2
Off-Site Land Use:		Existing	By: IL
		Proposed	Date: 03/10/2020

RUNOFF CURVE NUMBER

Soil Group	Land Use or Zoning	Area (acres)	RCN	RCN x Area
D	EX 2 - Open Space - Good Condition	0.17	80	13.8

Total Area 0.172 ac 0.000269 sq. mi **Weighted RCN =** 80.0

TIME OF CONCENTRATION

ID	Type of Flow	n	Length (ft)	Slope (ft/ft)	Area (sf)	Wet P (ft)	Velocity (fps)	Tt (min)
Sheet Flow (P_2= 4.20 in.)								
EX 2 - A	Grass	0.15	150	0.017	$T_t = \frac{0.42\,(nL)^{0.8}}{(P_2)^{0.5}\,S^{0.4}}$			12.72
								0.00
								0.00
								0.00
Shallow Concentrated Flow								
EX 2 - B	Unpaved		103	0.010	Tt= L (unpaved)			1.08
					60*16.1345*S0.5			0.00
					Tt= L (paved)			0.00
					60*20.3282*S0.5			0.00
							Total T_c	13.80
							Total T_L	8.28

ADDRESS: 500 WESTINGHOUSE ROAD

REV	DESCRIPTION	DATE	APR

DESIGNED BY: JG
REVIEWED BY: BG
DRAWN BY: JG

BGE

BROWN & GAY ENGINEERS, INC.
1701 DIRECTORS BLVD., SUITE 1000
AUSTIN, TX 78731
TBPE Registration No. F-1046
TEL 512-879-0400 www.brownglay.com

ASCEND WESTINGHOUSE
GEORGETOWN, TEXAS

EXISTING HYDROLOGY PLAN

STATE OF TEXAS
BRIAN J. GRACE
121846
LICENSED
PROFESSIONAL ENGINEER
9/21/2020

2020-41-SDP

500 WESTINGHOUSE ROAD

G:\TXC\Projects\DHI_Communities\7616-00-Westinghouse\LD\01_CADD\01_Sits\02_Site Plan\7616-C-SP-EX HYDRO.dwg Layout: 46 EXISTING HYDROLOGY PLAN Plotted: 9/21/2020 9:56:15 AM

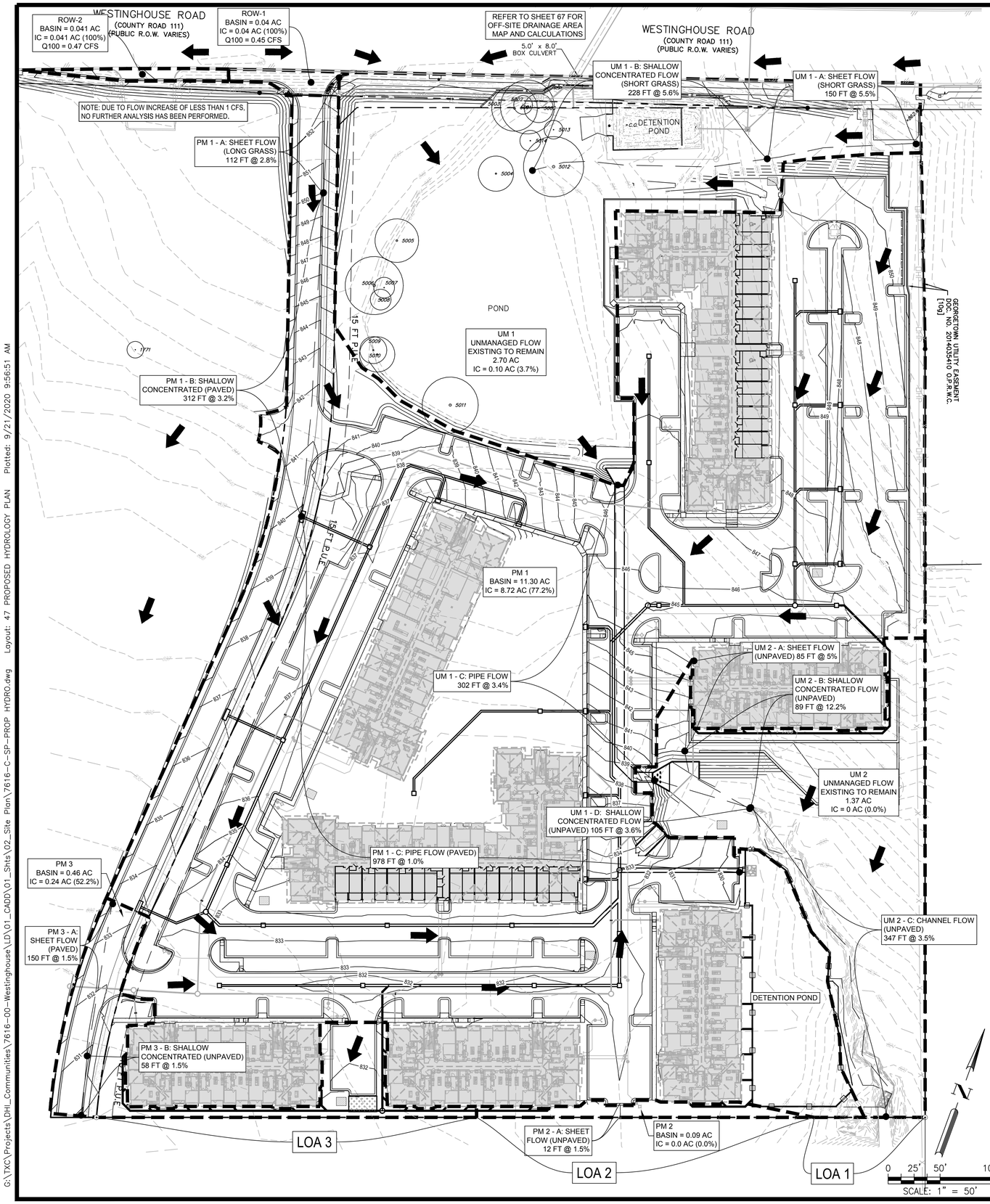

FLOW OUTPUT						
STORM EVENT	LOA #1					
	PRE-DEVELOPMENT	POST DEVELOPMENT (TO POND)	POST DEVELOPMENT (POND OUTFLOW)	POST DEVELOPMENT (UNMANAGED 1)	POST DEVELOPMENT (UNMANAGED 2)	POST DEVELOPMENT (TOTAL)
2	24.2 CFS	40.0 CFS	6.4 CFS	4.9 CFS	2.6 CFS	8.0 CFS
10	48.9 CFS	58.7 CFS	28.2 CFS	9.9 CFS	5.5 CFS	36.0 CFS
25	62.6 CFS	69.5 CFS	42.3 CFS	12.8 CFS	7.2 CFS	55.1 CFS
100	85.5 CFS	87.3 CFS	66.1 CFS	17.4 CFS	9.8 CFS	83.5 CFS

FLOW OUTPUT		
STORM EVENT	LOA #2	
	PRE-DEVELOPMENT	POST DEVELOPMENT (TOTAL)
2	0.3 CFS	0.2 CFS
10	0.6 CFS	0.4 CFS
25	0.8 CFS	0.5 CFS
100	1.1 CFS	0.6 CFS

FLOW OUTPUT		
STORM EVENT	LOA #3	
	PRE-DEVELOPMENT	POST DEVELOPMENT (TOTAL)
2	5.0 CFS	1.7 CFS
10	10.4 CFS	2.6 CFS
25	13.5 CFS	3.3 CFS
100	18.5 CFS	4.1 CFS

LEGEND

- PROPERTY BOUNDARY
- EXISTING MAJOR CONTOUR
- EXISTING MINOR CONTOUR
- PROPOSED MAJOR CONTOUR
- PROPOSED MINOR CONTOUR
- FLOW ARROW
- DRAINAGE DIVIDE

IDF COEFFICIENTS PER CITY OF GEORGETOWN DCM TABLE 3-3

IDF	25 YR	100 YR
a	111.07	129.03
b	17.23	17.83
c	0.7815	0.7625

DRAINAGE AREA	AREA (acres)	COMPOSITE C		A·C25	A·C100	Tc (min)	INTENSITY		DISCHARGE	
		C25	C100				I 25yr (in/hr)	I 100yr (in/hr)	Q 25 (cfs)	Q 100 (cfs)
ROW 1	0.04	0.95	0.95	0.04	0.04	5.00	9.8	11.9	0.37	0.45
ROW 2	0.04	0.95	0.95	0.04	0.04	5.00	9.8	11.9	0.39	0.47

NOTE: DUE TO FLOW INCREASE OF LESS THAN 1 CFS, NO FURTHER ANALYSIS HAS BEEN PERFORMED.

WORKSHEET FOR SCS HYDROLOGIC PARAMETERS

Site Conditions:		Existing	Project: Westinghouse
	X	Proposed	Subarea Number: PM 1 LOA 1
Off-Site Land Use:		Existing	By: IL
		Proposed	Date: 8/19/2020

RUNOFF CURVE NUMBER

Soil Group	Land Use or Zoning	Area (acres)	RCN	RCN x Area
D	PM 1 - Parking & Buildings - Impervious	8.72	98	854.6
D	PM 1 - Open Space - Good Condition	2.58	80	206.4

Total Area 11.30 ac 0.017656 sq. mi Weighted RCN = 93.9

TIME OF CONCENTRATION

ID	Type of Flow	n	Length (ft)	Slope (ft/ft)	Area (sf)	Wet P (ft)	Velocity (fps)	Tt (min)
Sheet Flow (P_2= 4.20 in.)								
PM 1 - A	Grass	0.24	115	0.028	$T_t = \frac{0.42\,(nL)^{0.8}}{(P_2)^{0.5}\,S^{0.4}}$			12.18
								0.00
								0.00
								0.00
Shallow Concentrated Flow								
PM 1 - B	Paved		312	0.032	Tt= L / 60*16.1345*S0.5 (unpaved)			1.43
					Tt= L / 60*20.3282*S0.5 (paved)			0.00
								0.00
Channel Flow								Tt=Σ(L/60V)
PM 1 - C		Pipe	1013	0.010			8.51	1.98
							Total T_c	15.59
							Total T_L	9.35

WORKSHEET FOR SCS HYDROLOGIC PARAMETERS

Site Conditions:		Existing	Project: Westinghouse
	X	Proposed	Subarea Number: PM 2 LOA 2
Off-Site Land Use:		Existing	By: IL
		Proposed	Date:

RUNOFF CURVE NUMBER

Soil Group	Land Use or Zoning	Area (acres)	RCN	RCN x Area
D	PM 2 - Open Space	0.0900	80	7.2

Total Area 0.090 ac 0.000141 sq. mi Weighted RCN = 80.0

TIME OF CONCENTRATION

ID	Type of Flow	n	Length (ft)	Slope (ft/ft)	Area (sf)	Wet P (ft)	Velocity (fps)	Tt (min)
Sheet Flow (P_2= 4.20 in.)								
PM 2 - A	Grass	0.24	12	0.015	$T_t = \frac{0.42\,(nL)^{0.8}}{(P_2)^{0.5}\,S^{0.4}}$			2.56
								0.00
								0.00
								0.00
							Total T_c	5.00
							Total T_L	3.00

WORKSHEET FOR SCS HYDROLOGIC PARAMETERS

Site Conditions:		Existing	Project: Westinghouse
	X	Proposed	Subarea Number: PM 3 LOA 3
Off-Site Land Use:		Existing	By: IL
		Proposed	Date: 8/19/2020

RUNOFF CURVE NUMBER

Soil Group	Land Use or Zoning	Area (acres)	RCN	RCN x Area
D	PM 3 - Parking Lot & Road - Impervious	0.240	98	23.5
D	PM 3 - Open Space & Grass Swale	0.220	80	17.6

Total Area 0.460 ac 0.000719 sq. mi Weighted RCN = 89.4

TIME OF CONCENTRATION

ID	Type of Flow	n	Length (ft)	Slope (ft/ft)	Area (sf)	Wet P (ft)	Velocity (fps)	Tt (min)
Sheet Flow (P_2= 4.20 in.)								
PM 3 - A	Impervious	0.015	150	0.015	$T_t = \frac{0.42\,(nL)^{0.8}}{(P_2)^{0.5}\,S^{0.4}}$			2.10
								0.00
								0.00
								0.00
Shallow Concentrated Flow								
PM 3 - B	Impervious		58	0.015	Tt= L / 60*16.1345*S0.5 (unpaved)			0.39
					Tt= L / 60*20.3282*S0.5 (paved)			0.00
								0.00
							Total T_c	5.00
							Total T_L	3.00

WORKSHEET FOR SCS HYDROLOGIC PARAMETERS

Site Conditions:		Existing	Project: Westinghouse
	X	Proposed	Subarea Number: UM 1 LOA 1
Off-Site Land Use:		Existing	By: IL
		Proposed	Date: 8/19/2020

RUNOFF CURVE NUMBER

Soil Group	Land Use or Zoning	Area (acres)	RCN	RCN x Area
D	UM 1 - Existing Ponds & Open Space - Good Condition	2.60	80	208.0
D	UM 1 - Parking & Building - Impervious	0.10	98	9.8

Total Area 2.700 ac 0.004219 sq. mi Weighted RCN = 80.7

TIME OF CONCENTRATION

ID	Type of Flow	n	Length (ft)	Slope (ft/ft)	Area (sf)	Wet P (ft)	Velocity (fps)	Tt (min)
Sheet Flow (P_2= 4.20 in.)								
UM 1 - A	Grass	0.24	150	0.055	$T_t = \frac{0.42\,(nL)^{0.8}}{(P_2)^{0.5}\,S^{0.4}}$			11.52
								0.00
								0.00
								0.00
Shallow Concentrated Flow								
UM 1 - B	unpaved		228	0.056	Tt= L / 60*16.1345*S0.5 (unpaved)			0.99
UM 1 - D	unpaved		105	0.038				0.56
					Tt= L / 60*20.3282*S0.5 (paved)			0.00
								0.00
Channel Flow								Tt=Σ(L/60V)
UM 1 - C		PIPE	302	0.033			19.50	0.26
UM 2 - C		Channel	347	0.035			3.92	1.48
							Total T_c	14.81
							Total T_L	8.88

WORKSHEET FOR SCS HYDROLOGIC PARAMETERS

Site Conditions:		Existing	Project: Westinghouse
	X	Proposed	Subarea Number: UM 2 LOA 1
Off-Site Land Use:		Existing	By: IL
		Proposed	Date: 8/19/2020

RUNOFF CURVE NUMBER

Soil Group	Land Use or Zoning	Area (acres)	RCN	RCN x Area
D	UM 2 - Open Space & Existing Channel - Good Condition	1.37	80	109.6
D	UM 2 - Parking & Building	0.00	98	0.0

Total Area 1.370 ac 0.002141 sq. mi Weighted RCN = 80.0

TIME OF CONCENTRATION

ID	Type of Flow	n	Length (ft)	Slope (ft/ft)	Area (sf)	Wet P (ft)	Velocity (fps)	Tt (min)
Sheet Flow (P_2= 4.20 in.)								
UM 2 - A	Short Grass	0.24	85	0.050	$T_t = \frac{0.42\,(nL)^{0.8}}{(P_2)^{0.5}\,S^{0.4}}$			7.58
								0.00
								0.00
								0.00
Shallow Concentrated Flow								
UM 2 - B	unpaved		89	0.122	Tt= L / 60*16.1345*S0.5 (unpaved)			0.26
								0.00
					Tt= L / 60*20.3282*S0.5 (paved)			0.00
								0.00
Channel Flow								Tt=Σ(L/60V)
UM 2 - C			347	0.035			3.92	1.48
							Total T_c	9.32
							Total T_L	5.59

ADDRESS: 500 WESTINGHOUSE ROAD

REV	DESCRIPTION	DATE	APR

DESIGNED BY: JG
REVIEWED BY: BG
DRAWN BY: JG

BGE
BROWN & GAY ENGINEERS, INC.
1701 DIRECTORS BLVD, SUITE 1000
AUSTIN, TX 78731
TBPE Registration No. F-1046
TEL: 512-879-0400 www.brownandgay.com

ASCEND WESTINGHOUSE
GEORGETOWN, TEXAS

PROPOSED HYDROLOGY PLAN

STATE OF TEXAS
BRIAN J. GRACE
121846
LICENSED PROFESSIONAL ENGINEER
9/21/2020

2020-41-SDP

500 WESTINGHOUSE ROAD

G:\TXC\Projects\DHI_Communities\7616-00-Westinghouse\LD\01_CADD\01_Shts\02_Site Plan\7616-C-SP-PROP HYDRO.dwg Layout: 47 PROPOSED HYDROLOGY PLAN Plotted: 9/21/2020 9:56:51 AM

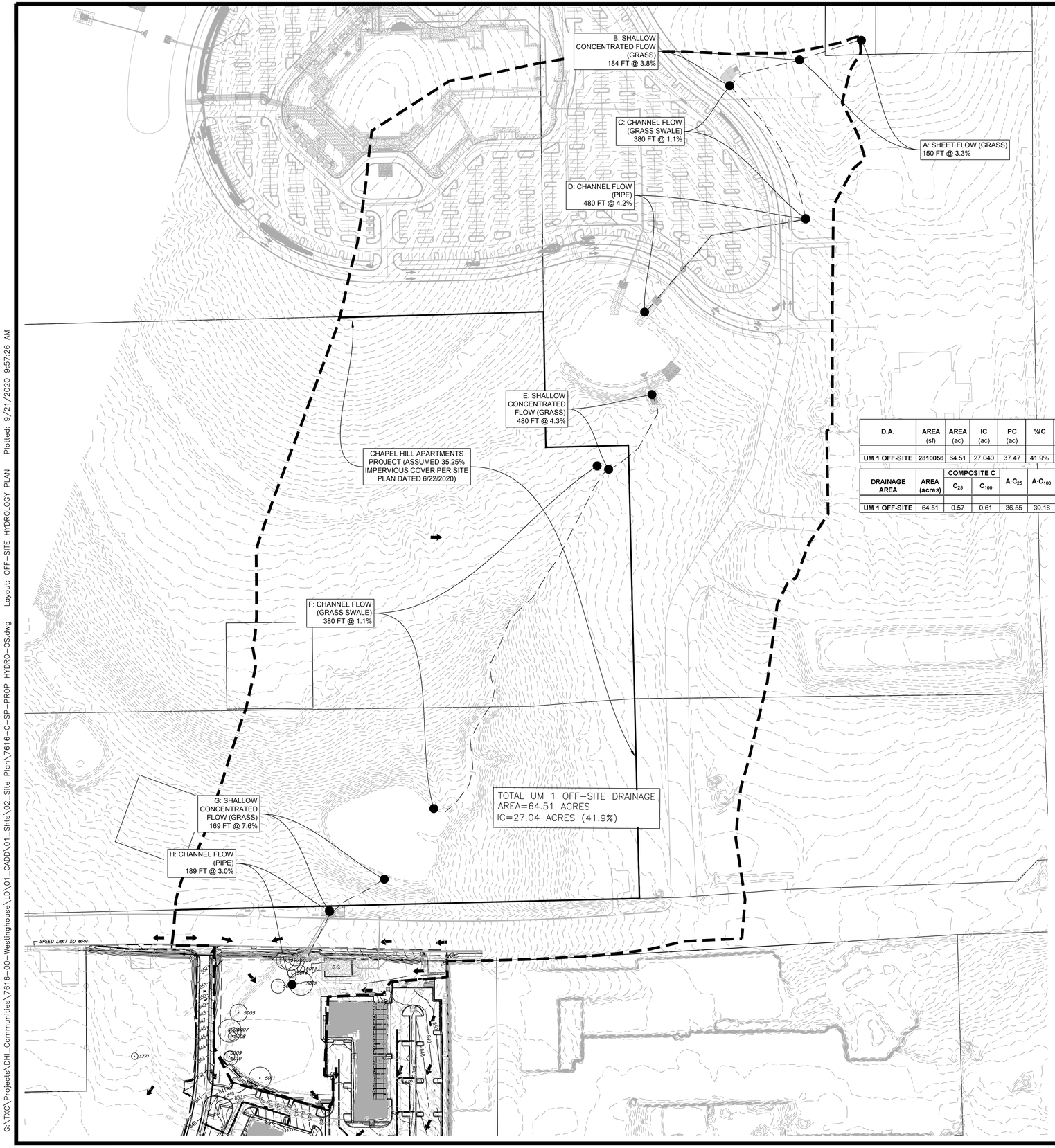

N

0 60' 120' 240'

SCALE: 1" = 120'

LEGEND

- PROPERTY BOUNDARY
- EXISTING MAJOR CONTOUR
- EXISTING MINOR CONTOUR
- PROPOSED MAJOR CONTOUR
- PROPOSED MINOR CONTOUR
- FLOW ARROW
- DRAINAGE DIVIDE

IDF COEFFICIENTS PER CITY OF GEORGETOWN DCM TABLE 3-3

IDF	25 YR	100 YR
a	111.07	129.03
b	17.23	17.83
c	0.7815	0.7625

D.A.	AREA (sf)	AREA (ac)	IC (ac)	PC (ac)	%IC	25 year perv C C	25 year perv C PC * C	25 year imp C C	25 year imp C IC * C	25 year weighted C (PC*C + IC*C)/A	100 year perv C C	100 year perv C PC * C	100 year imp C C	100 year imp C IC * C	100 year weighted C (PC*C + IC*C)/A
UM 1 OFF-SITE	2810056	64.51	27.040	37.47	41.9%	0.29	10.87	0.95	25.69	0.57	0.36	13.49	0.95	25.69	0.61

DRAINAGE AREA	AREA (acres)	COMPOSITE C C_{25}	COMPOSITE C C_{100}	$A \cdot C_{25}$	$A \cdot C_{100}$	SHEET FLOW Length (ft)	SHEET FLOW Manning's (n)	SHEET FLOW Slope ft/ft	SHEET FLOW Tc (min)	SHALLOW CONCENTRATED FLOW Length (ft)	SHALLOW CONCENTRATED FLOW Manning's (n)	SHALLOW CONCENTRATED FLOW Slope ft/ft	SHALLOW CONCENTRATED FLOW Tc (min)	CHANNEL FLOW Length (ft)	CHANNEL FLOW Manning's (n)	CHANNEL FLOW Slope ft/ft	CHANNEL FLOW Velocity ft/s	CHANNEL FLOW Tc (min)	Tc (min)	INTENSITY I 25yr (in/hr)	INTENSITY I 100yr (in/hr)	DISCHARGE Q 25 (cfs)	DISCHARGE Q 100 (cfs)
UM 1 OFF-SITE	64.51	0.57	0.61	36.55	39.18	150	0.24	0.033	4.7	587	0.3	0.052	12.9	2005	varies	0.032	8.3	4.0	21.63	6.4	7.8	232.46	306.66

WORKSHEET FOR SCS HYDROLOGIC PARAMETERS

Site Conditions:		Existing	Project: Westinghouse
	X	Proposed	Subarea Number: UM 1 LOA 1 - Off-Site
Off-Site Land Use:		Existing	By: IL
		Proposed	Date: 8/19/2020

RUNOFF CURVE NUMBER

Soil Group	Land Use or Zoning	Area (acres)	RCN	RCN x Area
D	UM 1 - Existing Ponds & Open Space - Good Condition	37.47	80	2997.6
D	UM 1 - Parking & Building - Impervious	27.04	98	2649.9

Total Area 64.510 ac 0.100797 sq. mi **Weighted RCN =** 87.5

TIME OF CONCENTRATION

ID	Type of Flow	n	Length (ft)	Slope (ft/ft)	Area (sf)	Wet P (ft)	Velocity (fps)	Tt (min)
Sheet Flow (P_2= 4.20 in.)								
A	Grass	0.24	150	0.033	$T_{tt} = \frac{0.42\,(nL)^{0.8}}{(P_2)^{0.5}\,S^{0.4}}$			14.10
Shallow Concentrated Flow								
B	unpaved		184	0.038	Tt= L (unpaved)			0.98
E	unpaved		234	0.043	60*16.1345*S0.5			1.17
G	unpaved		169	0.076	Tt= L (paved)			0.63
					60*20.3282*S0.5			
Channel Flow								Tt=Σ(L/60V)
C		Channel	380	0.011			3.07	2.06
D		Pipe	480	0.042			10.50	0.76
F		Channel	956	0.043			9.50	1.68
H		Pipe	189	0.030			10.0	0.32
							Total T_c	21.69
							Total T_L	13.02

ADDRESS: 500 WESTINGHOUSE ROAD

REV	DESCRIPTION	DATE	APR

DESIGNED BY: JG

REVIEWED BY: BG

DRAWN BY: JG

BGE
BROWN & GAY ENGINEERS, INC.
1701 DIRECTORS BLVD, SUITE 1000
AUSTIN, TX 78731
TBPE Registration No. F-1046
TEL: 512-879-0400 www.brownggy.com

500 WESTINGHOUSE ROAD

ASCEND WESTINGHOUSE
GEORGETOWN, TEXAS

OFF-SITE HYDROLOGY PLAN

STATE OF TEXAS
BRIAN J. GRACE
121846
LICENSED
PROFESSIONAL ENGINEER
8/20/2020

2020-41-SDP

G:\TXC\Projects\DHI_Communities\7616-00-Westinghouse\LD\01_CADD\01_Shts\02_Site Plan\7616-C-SP-PROP HYDRO-OS.dwg Layout: OFF-SITE HYDROLOGY PLAN Plotted: 9/21/2020 9:57:26 AM

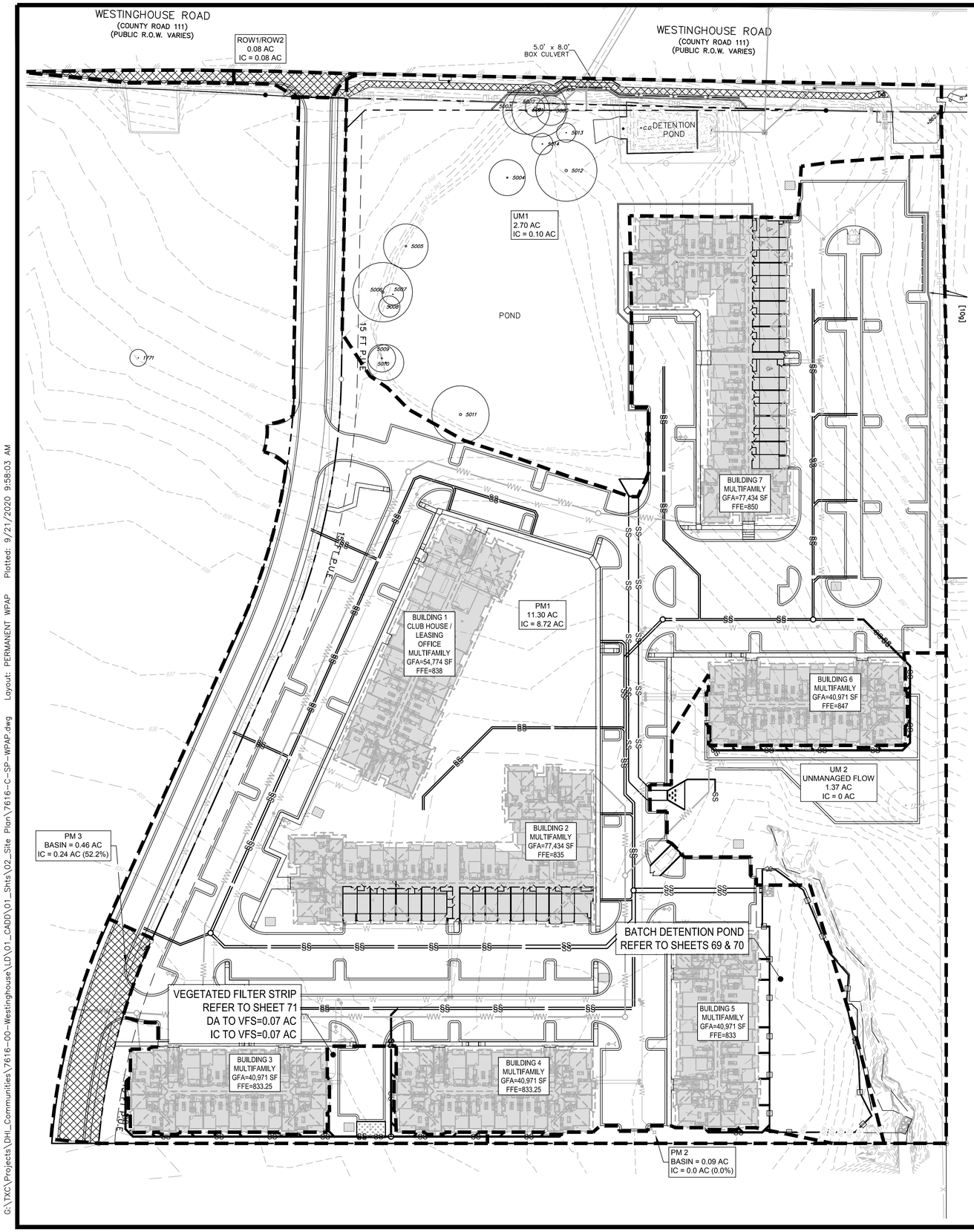

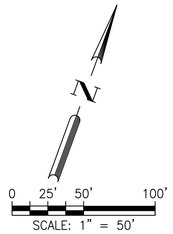

LEGEND

UNTREATED IMPERVIOUS COVER

DRAINAGE BOUNDARY

WATER QUALITY SUMMARY					
BASIN	BASIN AREA (AC.)	BASIN IC (AC.)	BMP	REMOVAL EFFICIENCY (%)	TSS REMOVED ANNUALLY (lbs)
LOA 1	15.37	8.84	BATCH DETENTION	91	8,340
LOA 2	0.09	0	-	-	-
LOA 3	0.46	0.24	FILTER STRIP	85	66
ROW-1/ROW-2[1]	0.08	0.08	-	-	-
TOTAL	16	9.16			8,406
REQUIRED ANNUAL TSS REMOVAL (TCEQ) (lbs)					7,955
REQUIRED ANNUAL TSS REMOVAL (GEORGETOWN) (lbs)[1]					8,378
PROVIDED ANNUAL TSS REMOVAL (lbs)					8,406

1. ROW-1/ROW-2 BASINS ARE INCLUDED FOR TCEQ TSS REMOVAL PURPOSES ONLY.

SUMMARY OF PERMANENT POLLUTION ABATEMENT MEASURES:

1. TEMPORARY BMP'S SHALL BE MAINTAINED UNTIL THE SITE IMPROVEMENTS ARE COMPLETED AND THE SITE HAS BEEN STABILIZED, INCLUDING SUFFICIENT VEGETATION BEING ESTABLISHED.

2. DURING CONSTRUCTION, TO THE EXTENT PRACTICAL, CONTRACTOR SHALL MINIMIZE THE AREA OF SOIL DISTURBANCE. AREAS OF DISTURBED SOIL SHALL BE REVEGETATED TO STABILIZE SOIL USING SOLID SOD IN A STAGGERED PATTERN. REFER TO SECTION 1.3.11 IN TCEQ'S TECHNICAL GUIDANCE MANUAL RG-348 (2005). SOD SHOULD BE USED IN CHANNELS AND ON SLOPES > 15%. THE CONTRACTOR MAY SUBSTITUTE THE USE OF SOD WITH THE PLACEMENT OF TOPSOIL AND A FRIABLE SEED BED WITH A PROTECTIVE MATTING OR HYDRAULIC MULCH ALONG WITH WATERING UNTIL VEGETATION IS ESTABLISHED. APPLICATIONS AND PRODUCTS SHALL BE THOSE APPROVED TXDOT AS OF FEBRUARY 2001 AND IN COMPLIANCE WITH THE TGM RG-348 (205). SEED MIXTURE AND/OR GRASS TYPE TO BE DETERMINED BY OWNER AND SHOULD BE IN COMPLIANCE WITH TGM RG-348 (2005) GUIDELINES. IRRIGATION MAY BE REQUIRED IN ORDER TO ESTABLISH SUFFICIENT VEGETATION.

3. FOR DISTURBED AREAS WHERE INSUFFICIENT SOIL EXISTS TO ESTABLISH VEGETATION, CONTRACTOR SHALL PLACE A MINIMUM OF 6" OF TOPSOIL PRIOR TO REVEGETATION.

4. PERMANENT BMP'S FOR THIS SITE INCLUDE ONE (1) BATCH DETENTION POND AND ONE (1) VEGETATED FILTER STRIP. THE PERMANENT BMPS HAVE BEEN DESIGNED TO REMOVE AT LEAST 80% OF THE INCREASED TOTAL SUSPENDED SOLIDS (TSS) FOR THE 16.0 ACRES IN ACCORDANCE WITH TCEQ'S TECHNICAL GUIDANCE MANUAL (TGM) RG-348 (2005).

5. TYPICAL SLOPES ON THIS PROJECT RANGE FROM 2% TO 12%.

6. SILT FENCING AND ROCK BERMS, WHERE APPROPRIATE, SHALL MAINTAINED UNTIL THE ROADWAY, UTILITY, DRAINAGE IMPROVEMENTS, AND BUILDING CONSTRUCTION ARE COMPLETED.

7. ENERGY DISSIPATORS SHALL BE PROVIDED AT POINTS OF CONCENTRATED DISCHARGE WHERE EXCESSIVE VELOCITIES MAY BE ENCOUNTERED.

8. CONTRACTOR SHALL INSTALL AND ESTABLISH VEGETATION FOR SOIL STABILIZATION PRIOR TO SITE CLOSEOUT.

9. ALL PERMANENT BMP'S MUST BE CERTIFIED BY A REGISTERED PROFESSIONAL ENGINEER.

ADDRESS: 500 WESTINGHOUSE ROAD

REV	DESCRIPTION	DATE	APR

DESIGNED BY: JG
REVIEWED BY: BG
DRAWN BY: JG

BROWN & GAY ENGINEERS, INC.
1701 DIRECTORS BLVD, SUITE 1000
AUSTIN, TX 78731
TBPE Registration No. F-1046
TEL: 512-879-0400 www.brownglay.com

ASCEND WESTINGHOUSE
GEORGETOWN, TEXAS

PERMANENT WATER POLLUTION ABATEMENT PLAN

STATE OF TEXAS
BRIAN J. GRACE
121846
LICENSED PROFESSIONAL ENGINEER
9/21/2020

500 WESTINGHOUSE ROAD

2020-41-SDP

G:\TXC\Projects\DHI_Communities\7616-00-Westinghouse\LD\01_CADD\01_Shts\02_Site Plan\7616-C-SP-WPAP.dwg Layout: PERMANENT WPAP Plotted: 9/21/2020 9:58:03 AM

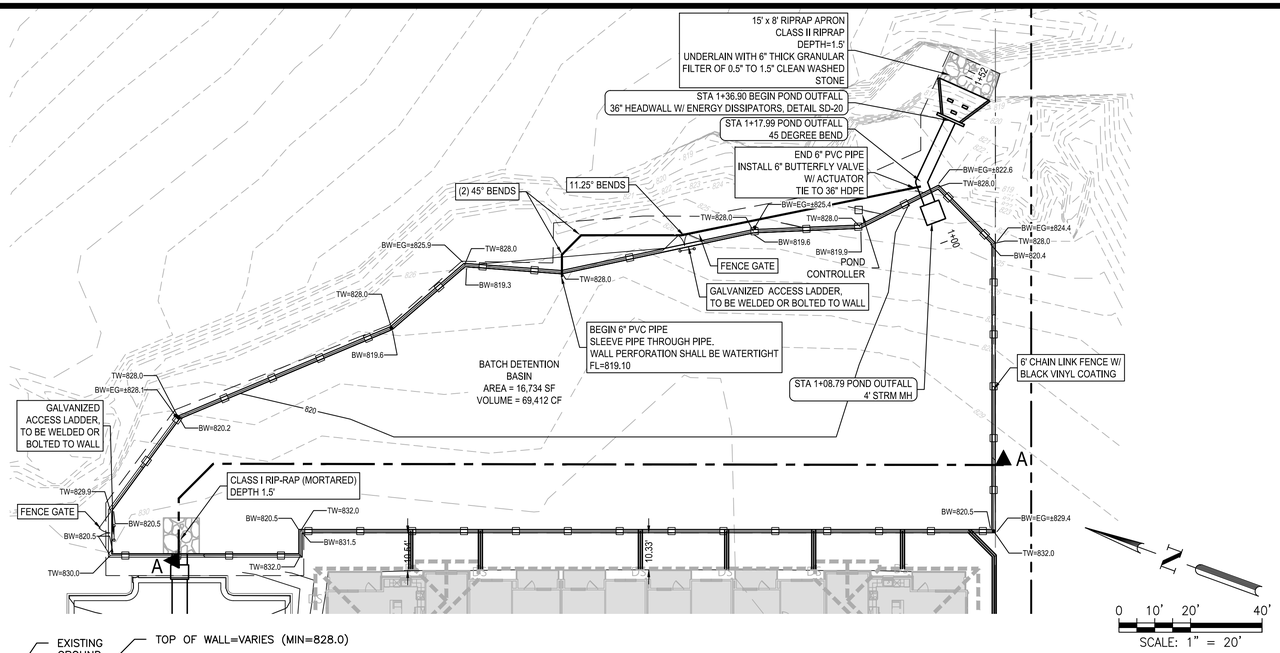

0 10' 20' 40'

SCALE: 1" = 20'

Water Quality Volume Table					
Stage (ft msl)	Pond Depth	Cumulative Pond Depth	Area	Volume	Cumulative
(Elevation)	(ft)	(ft)	(sf)	(cf)	Volume (cf)
819.10	0.00	0.00	1,000	0	0
820.00	0.90	0.90	9,178	4,580	4,580
821.00	1.00	1.90	16,734	12,956	17,536
822.00	1.00	2.90	16,734	16,734	34,270
824.00	2.00	4.90	16,734	33,468	67,738
824.10	0.10	5.00	16,734	1,673	69,412

RIP-RAP CALCULATION AT DETENTION POND OUTFALL

HEC-14 Riprap Aprons (HEC-14 10-2)

Q (cfs)	**68.33**	flow
D (ft)	**3**	pipe diameter
TW (ft)	**3**	tailwater depth
g (ft/s^2)	32.2	constant
y_n (ft)	**0.94**	normal supercritical depth
D' (ft)	**1.97**	adjusted culvert rise for supercritical flow

$$D' = \frac{D + y_n}{2} \quad \text{(Eq. 10.5)}$$

NOTES

1. Tailwater of 3.0 is the approximate tailwater at time of peak discharge from the point, and does not represent maximum depth of existing channel WSE.

D_{50} (ft)	**0.75**	$D_{50} = 0.2\,D\left(\frac{Q}{\sqrt{g}D^{2.5}}\right)^{4/3}\left(\frac{D}{TW}\right)$ (Eq. 10.4)
L (ft)	**7.88**	(length of riprap apron)
D (ft)	**2.46**	(depth of riprap)

OUTLET STRUCTURES									
ELEV (FT)	WEIR		WEIR		RISER		BARREL		TOTAL (CFS)
							SIZE	30"	
	WIDTH	2.25	WIDTH	2	LENGTH	20	LENGTH	24	
	ELEV	824.1	ELEV	824.1	ELEV	826.8	ELEV	815.4	
	DISCHARGE (CFS)		DISCHARGE (CFS)		DISCHARGE (CFS)		SLOPE	10%	
824.1	0.00		0.00				0 (I.C.)		0.00
825	5.76		5.12				64.5 (I.C.)		10.89
826	17.68		15.71				64.5 (I.C.)		33.39
826.8	29.95		26.62		0.00		64.5 (I.C.)		56.57
827	33.34		29.63		5.37		64.5 (I.C.)		68.33

NOTES:

1. UPON COMPLETION OF THE PROPOSED SITE IMPROVEMENTS, AND PRIOR TO THE RELEASE OF THE CERTIFICATE OF OCCUPANCY BY THE PLANNING AND DEVELOPMENT REVIEW DEPARTMENT, THE ENGINEER SHALL CERTIFY IN WRITING THAT THE PROPOSED DETENTION AND FILTRATION FACILITIES WERE CONSTRUCTED IN CONFORMANCE WITH THE APPROVED PLANS.
2. POND BOTTOMS, SIDE SLOPES AND EARTHEN EMBANKMENTS SHALL BE COMPACTED TO NINETY–FIVE (95) PERCENT MAXIMUM DENSITY, IN ACCORDANCE WITH CITY OF GEORGETOWN STANDARD SPECIFICATIONS.
3. ALL STRUCTURAL WALL DETAILS TO BE PROVIDED BY THE OWNER'S STRUCTURAL ENGINEER.
4. ALL PIPE OR STRUCTURE PERFORATIONS THROUGH LINER SHALL BE WATERTIGHT.
5. SOIL SUPPORTING THE LINER SHALL BE COMPACTED TO BETWEEN 90% AND 95% STANDARD PROCTOR DENSITY, EITHER BY CONSTRUCTION EQUIPMENT OR MECHNANICAL VIBRATING ROLLER COMPACTING.
6. GEOMEMBRANE LINER SHALL HAVE A MINIMUM THICKNESS OF 30 MILS AND BE ULTRAVIOLET RESISTANT.
7. PENETRATIONS THROUGH LINER SHALL BE WATERTIGHT IN ACCORDANCE WITH MANUFACTURER'S RECOMMENDATIONS.
8. FLOAT SWITCH TO BE INSTALLED ON 4" CONCRETE PAD.
9. SYSTEM SHALL BE 12 VDC WITH SOLAR CHARGED 12 VDC BATTERY. ALTERNATE ELECTRICAL DESIGN MAY BE ALSO UTILIZED IN LIEU OF SOLAR POWER WITH ENGINEERS APPROVAL.
10. ACTUATOR SHALL BE ELECTRONIC QUARTER–TURN WITH MANUAL OVERRIDE AND POSITION INDICATOR.
11. CONTROLLER SHALL BE SET TO OPEN VALVE 12 HOURS AFTER INITIAL RAINFALL DETECTION. VALVE TO REMAIN OPEN UNTIL 2 HRS FOLLOWING BASIN EMPTY SIGNALS.
12. CONTROLLER SHALL BE IN LOCKED ENCLOSURE WITH EXTERNAL INDICATOR.
13. CONTROLLER SHALL HAVE TEST SEQUENCE, ON/OFF/RESET SWITCH AND THE PROGRAMMING SHALL BE FIELD UPLOADABLE.
14. ALL WIRING SHALL BE INSTALLED IN CONDUIT AND BURIED. CONTACT ENGINEER FOR ADDITIONAL CONTROLLER SCHEMATICS.
15. CONTRACTOR SHALL TEST AND VERIFY POND IS FUNCTIONING AS DESIGNED PRIOR TO ACCEPTANCE. CONTRACTOR SHALL SUBMIT LIST OF CONTROL PANEL COMPONENTS AND OPERATIONS MANUAL TO ENGINEER.

Pond Elevation-Storage Table					
Elevation (ft)	Surface Area (ft)	Surface Area (ac.)	Incremental Volume (ft³)	Total Volume (ft³)	
824.10	16,734	0.3841598	0	0	
824.60	16,734	0.3841598	8,367	8,367	2-YEAR
825.00	16,734	0.3841598	6,694	15,061	
825.80	16,734	0.3841598	13,387	28,448	10-YEAR
826.00	16,734	0.3841598	3,347	31,795	
826.30	16,734	0.3841598	5,020	36,815	25-YEAR
827.00	16,734	0.3841598	11,714	48,529	100-YEAR

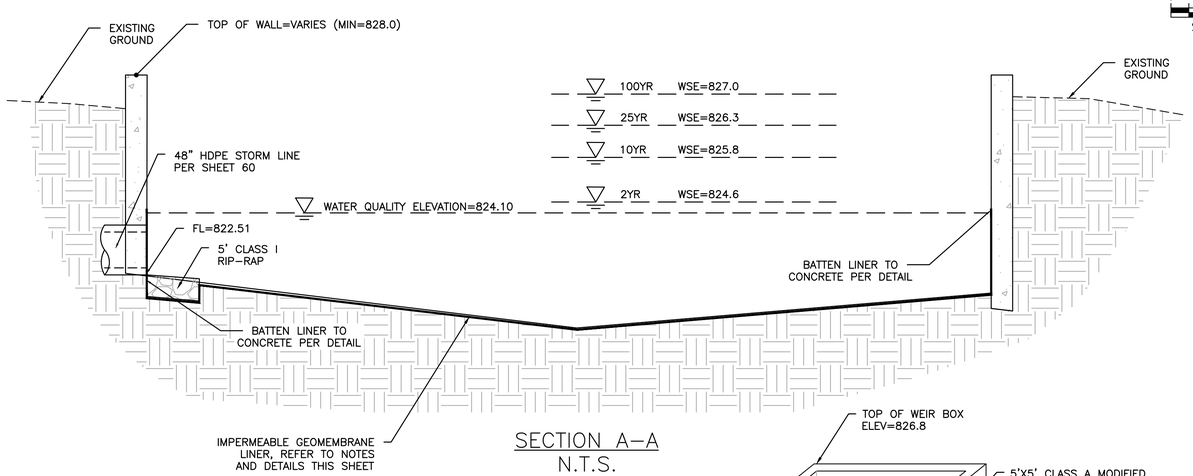

SECTION A–A
N.T.S.

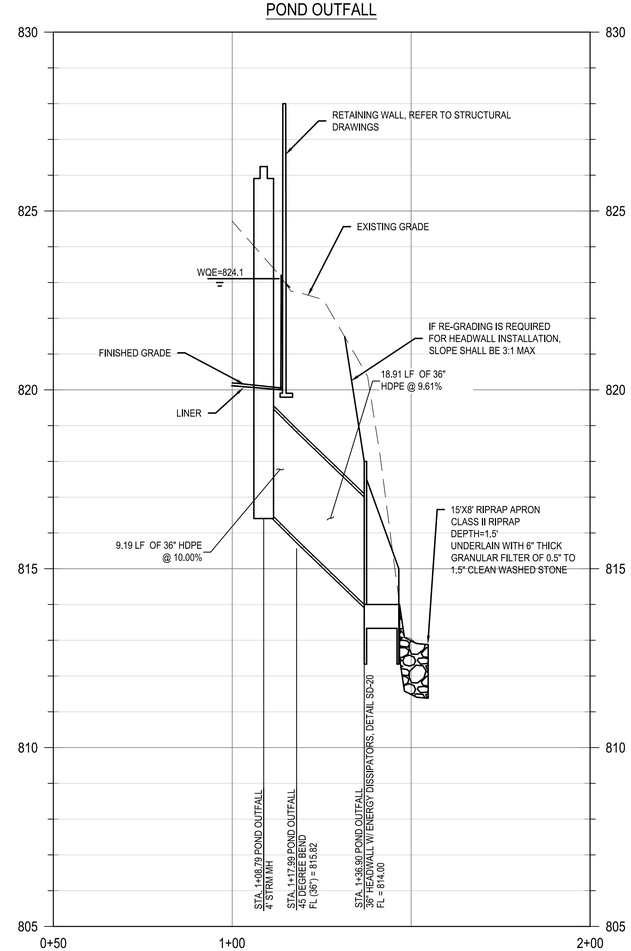

NOTES:

1. CONCRETE WALL AND FOOTING PER ENGINEER'S DESIGN.
2. ANCHOR BOLT EMBEDMENT AND WALLCONNECTION DETAILS PER GEOMEMBRANE LINER MANUFACTURER'S RECOMMENDATIONS.
3. LINER SHALL EXTEND ABOVE WATER QUALITY ELEVATION. IF LINER TERMINATES BELOW WATER QUALITY ELEVATION, ALL WALL JOINTS UP TO THE WATER QUALITY ELEVATION MUST BE WATERTIGHT.

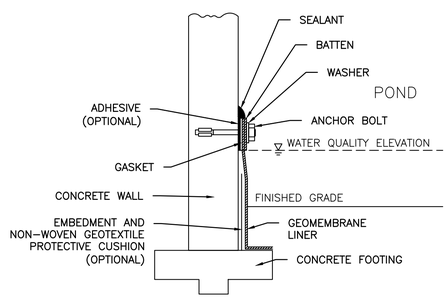

GEOMEMBRANE LINER ATTACHMENT DETAILS
N.T.S.

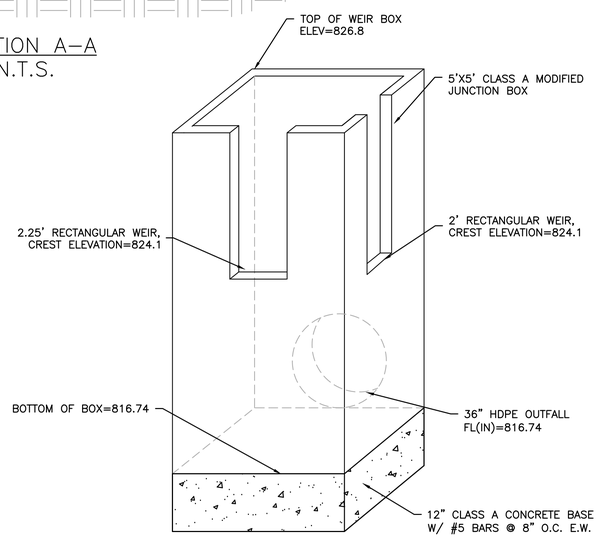

OUTLET STRUCTURE DETAIL
N.T.S.

ADDRESS: 500 WESTINGHOUSE ROAD

REV	DESCRIPTION	DATE	APR

DESIGNED BY: JG
REVIEWED BY: BG
DRAWN BY: JG

BROWN & GAY ENGINEERS, INC.
1701 DIRECTORS BLVD, SUITE 1000
AUSTIN, TX 78731
TBPE Registration No. F-1046
TEL: 512-879-0400 www.brownjgay.com

ASCEND WESTINGHOUSE
GEORGETOWN, TEXAS

DETENTION & WATER QUALITY POND DETAIL
(1 OF 2)

STATE OF TEXAS
BRIAN J. GRACE
121846
LICENSED PROFESSIONAL ENGINEER
9/21/2020

500 WESTINGHOUSE ROAD

2020-41-SDP

G:\TXC\Projects\DHI_Communities\7616-00-Westinghouse\LD\01_CADD\01_Shts\02_Site Plan\7616-C-SP-POND.dwg Layout: 48 DETENTION & WATER QUALITY POND DETAIL (1 OF 2) Plotted: 9/21/2020 9:58:52 AM

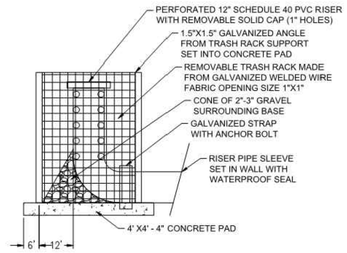

TRASH RACK/RISER PIPE DETAIL

NTS

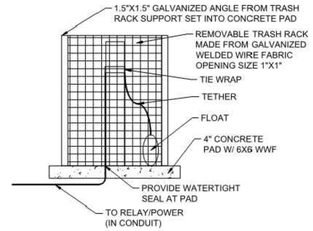

FLOAT SWITCH DETAIL

NTS

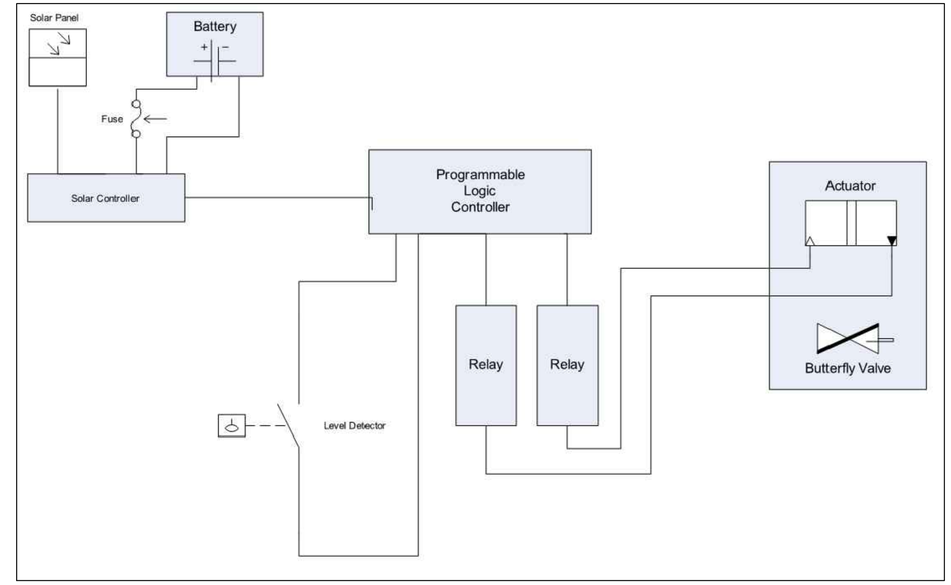

CONTROLLER CIRCUIT DIAGRAM

2. Drainage Basin Parameters (This information should be provided for each basin):

Drainage Basin/Outfall Area No. =	**LOA 1**	
Total drainage basin/outfall area =	**15.37**	acres
Predevelopment impervious area within drainage basin/outfall area =	**0.00**	acres
Post-development impervious area within drainage basin/outfall area =	**8.84**	acres
Post-development impervious fraction within drainage basin/outfall area =	**0.58**	
$L_{M\ THIS\ BASIN}$ =	**7694**	lbs.

3. Indicate the proposed BMP Code for this basin.

Proposed BMP =	**Batch**	
Removal efficiency =	**91**	percent

4. Calculate Maximum TSS Load Removed (L_R) for this Drainage Basin by the selected BMP Type.

RG-348 Page 3-33 Equation 3.7: L_R = (BMP efficiency) x P x (A_I x 34.6 + A_P x 0.54)

where:

A_C = Total On-Site drainage area in the BMP catchment area
A_I = Impervious area proposed in the BMP catchment area
A_P = Pervious area remaining in the BMP catchment area
L_R = TSS Load removed from this catchment area by the proposed BMP

A_C =	**11.30**	acres
A_I =	**8.72**	acres
A_P =	**2.58**	acres
L_R =	**8826**	lbs

5. Calculate Fraction of Annual Runoff to Treat the drainage basin / outfall area

Desired $L_{M\ THIS\ BASIN}$ =	**8340**	lbs.
F =	**0.94**	

6. Calculate Capture Volume required by the BMP Type for this drainage basin / outfall area. Calculations from RG-348

Rainfall Depth =	**2.40**	inches
Post Development Runoff Coefficient =	**0.59**	
On-site Water Quality Volume =	**57732**	cubic feet

Calculations from RG-348 Pages 3-36 to 3-37

Off-site area draining to BMP =	**0.00**	acres
Off-site Impervious cover draining to BMP =	**0.00**	acres
Impervious fraction of off-site area =	**0**	
Off-site Runoff Coefficient =	**0.00**	
Off-site Water Quality Volume =	**0**	cubic feet
Storage for Sediment =	**11546**	
Total Capture Volume (required water quality volume(s) x 1.20) =	**69279**	cubic feet

ADDRESS: 500 WESTINGHOUSE ROAD

REV	DESCRIPTION	DATE	APR

DESIGNED BY: JG
REVIEWED BY: BG
DRAWN BY: JG

BGE
BROWN & GAY ENGINEERS, INC.
1701 DIRECTORS BLVD, SUITE 1000
AUSTIN, TX 78731
TBPE Registration No. F-1046
TEL: 512-879-0400 www.brownjgay.com

ASCEND WESTINGHOUSE
GEORGETOWN, TEXAS

DETENTION & WATER QUALITY POND DETAIL (2 OF 2)

STATE OF TEXAS
BRIAN J. GRACE
121846
LICENSED PROFESSIONAL ENGINEER
9/21/2020

500 WESTINGHOUSE ROAD

2020-41-SDP

G:\TXC\Projects\DHI_Communities\7616-00-Westinghouse\LD\01_CADD\01_Shts\02_Site Plan\7616-C-SP-POND.dwg Layout: 49 DETENTION & WATER QUALITY POND DETAIL (2 OF 2) Plotted: 9/21/2020 9:58:53 AM

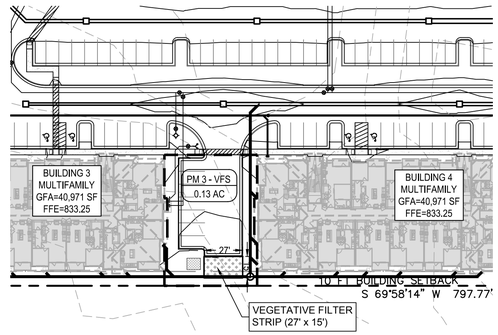

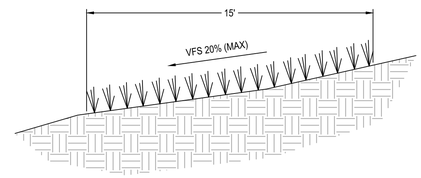

VEGETATIVE FILTER STRIPS DETAILS

NO SCALE

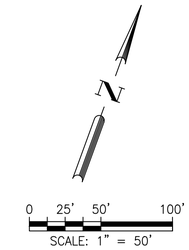

LEGEND

- PROPERTY BOUNDARY
- EXISTING MAJOR CONTOUR
- EXISTING MINOR CONTOUR
- PROPOSED MAJOR CONTOUR
- PROPOSED MINOR CONTOUR
- FLOW ARROW
- DRAINAGE DIVIDE
- DA-XX / XX A.C. — INLET ID / DRAINAGE AREA
- WATER QUALITY DRAINAGE BOUNDARY

NOTES:
1. REFER TO DRAINAGE AREA CALCULATIONS SHEET FOR DRAINAGE AREA INFORMATION.

2. Drainage Basin Parameters (This information should be provided for each basin):

Drainage Basin/Outfall Area No. =	**PM 3**	
Total drainage basin/outfall area =	**0.73**	acres
Predevelopment impervious area within drainage basin/outfall area =	**0.00**	acres
Post-development impervious area within drainage basin/outfall area =	**0.43**	acres
Post-development impervious fraction within drainage basin/outfall area =	**0.59**	
$L_{M\ THIS\ BASIN}$ =	**374**	lbs.

3. Indicate the proposed BMP Code for this basin.

Proposed BMP = **Vegetated Filter Strips**
Removal efficiency = **85** percent

4. Calculate Maximum TSS Load Removed (L_R) for this Drainage Basin by the selected BMP Type.

RG-348 Page 3-33 Equation 3.7: L_R = (BMP efficiency) x P x (A_I x 34.6 + A_P x 0.54)

where:

A_C = Total On-Site drainage area in the BMP catchment area
A_I = Impervious area proposed in the BMP catchment area
A_P = Pervious area remaining in the BMP catchment area
L_R = TSS Load removed from this catchment area by the proposed BMP

A_C =	**0.13**	acres
A_I =	**0.07**	acres
A_P =	**0.06**	acres
L_R =	**67**	lbs

16. Vegetated Filter Strips — Designed as Required in RG-348 — Pages 3-55 to 3-57

There are no calculations required for determining the load or size of vegetative filter strips.
The 80% removal is provided when the contributing drainage area does not exceed 72 feet (direction of flow) and the sheet flow leaving the impervious cover is directed across 15 feet of engineered filter strips with maximum slope of 20% or across 50 feet of natural vegetation with a maximum slope of 10%. There can be a break in grade as long as no slope exceeds 20%.

If vegetative filter strips are proposed for an interim permanent BMP, they may be sized as described on Page 3-56 of RG-348.

ADDRESS: 500 WESTINGHOUSE ROAD

REV	DESCRIPTION	DATE	APR

DESIGNED BY: JG
REVIEWED BY: BG
DRAWN BY: JG

BGE
BROWN & GAY ENGINEERS, INC.
1701 DIRECTORS BLVD, SUITE 1000
AUSTIN, TX 78731
TBPE Registration No. F-1046
TEL: 512-879-0400 www.brownggay.com

ASCEND WESTINGHOUSE
GEORGETOWN, TEXAS

WATER QUALITY GRASSY SWALE & VEGETATIVE FILTER STRIPS DETAILS

STATE OF TEXAS — BRIAN J. GRACE — 121846 — LICENSED PROFESSIONAL ENGINEER — 9/21/2020

SHEET 71 OF 76

500 WESTINGHOUSE ROAD

2020-41-SDP

G:\TXC\Projects\DHI_Communities\7616-00-Westinghouse\LD\01_CADD\01_Shts\02_Site Plan\7616-C-SP-POND.dwg Layout: WATER QUALITY GRASSY SWALE & VEGETATIVE FILTER STRIPS DETAILS Plotted: 9/21/2020 9:59:00 AM

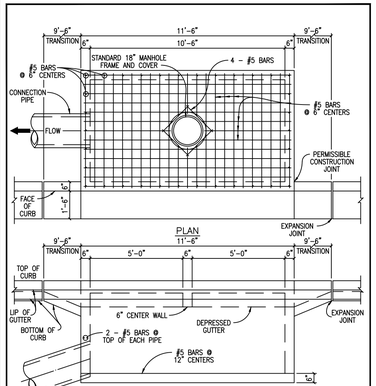

NOTES:
1. ALL CONCRETE SHALL BE CLASS "A" 3,000 PSI CONCRETE.
2. STORM SEWER PIPE MATERIAL TO BE R.C.P. (CLASS III) UNLESS OTHERWISE APPROVED BY THE CITY OF GEORGETOWN.

The Architect/Engineer assumes responsibility for appropriate use of this standard.

CITY OF GEORGETOWN CONSTRUCTION STANDARDS AND DETAILS — **CURB INLET DETAIL** — SD09 — ADOPTED 6/21/2006

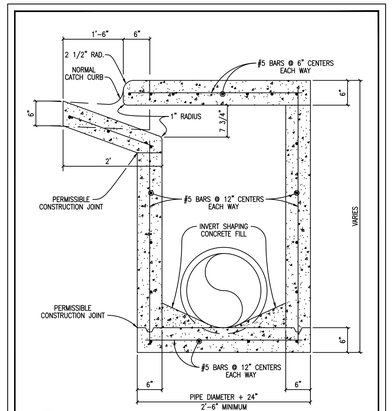

NOTES:
1. ALL CONCRETE SHALL BE CLASS "A" 3,000 PSI CONCRETE.
2. STORM SEWER PIPE MATERIAL TO BE R.C.P. (CLASS III) UNLESS OTHERWISE APPROVED BY THE CITY OF GEORGETOWN.

The Architect/Engineer assumes responsibility for appropriate use of this standard.

CITY OF GEORGETOWN CONSTRUCTION STANDARDS AND DETAILS — **CURB DRAIN INLET TYPICAL SECTION** — SD10 — ADOPTED 6/21/2006

The Architect/Engineer assumes responsibility for appropriate use of this standard.

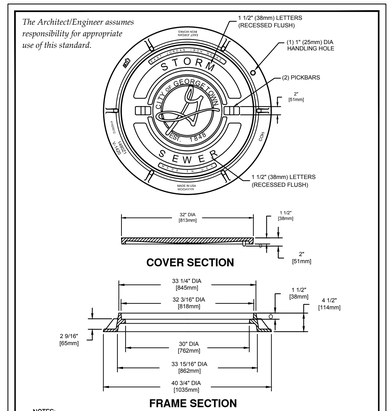

NOTES:
1. STANDARD STORM SEWER MANHOLE SET TO BE EAST JORDAN IRON WORKS, INC. CATALOG NO. 14804 V-1420\14802\, COVER TO BE STAMPED WITH "STORM SEWER".
2. STANDARD STORM SEWER MANHOLE SET TO BE HEAVY DUTY LOAD RATED.
3. FOR MORE DETAILED SPECIFICATIONS REFER TO EAST JORDAN IRON WORKS, INC. REFERENCE PRODUCT DRAWING 41420012 00148391.
4. FOR BOLTED STORM SEWER MANHOLE SET REFER TO DETAIL SD11A.

The Architect/Engineer assumes responsibility for appropriate use of this standard.

CITY OF GEORGETOWN CONSTRUCTION STANDARDS AND DETAILS — **STANDARD STORM SEWER MANHOLE SET** — SD11 — ADOPTED 6/21/2006

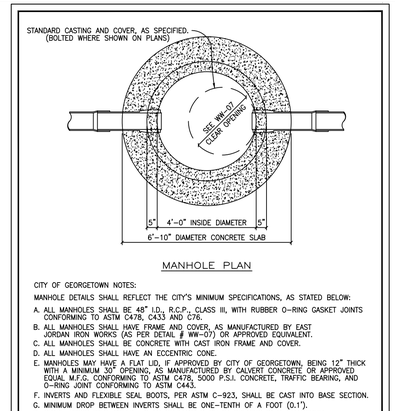

CITY OF GEORGETOWN NOTES:

MANHOLE DETAILS SHALL REFLECT THE CITY'S MINIMUM SPECIFICATIONS, AS STATED BELOW:

A. ALL MANHOLES SHALL BE 48" I.D., R.C.P., CLASS III, WITH RUBBER O-RING GASKET JOINTS CONFORMING TO ASTM C478, C433 AND C76.
B. ALL MANHOLES SHALL HAVE FRAME AND COVER, AS MANUFACTURED BY EAST JORDAN IRON WORKS (AS PER DETAIL # WW-07) OR APPROVED EQUIVALENT.
C. ALL MANHOLES SHALL BE CONCRETE WITH CAST IRON FRAME AND COVER.
D. ALL MANHOLES SHALL HAVE AN ECCENTRIC CONE.
E. MANHOLES MAY HAVE A FLAT LID, IF APPROVED BY CITY OF GEORGETOWN, BEING 12" THICK WITH A MINIMUM 30" OPENING, AS MANUFACTURED BY CALVERT CONCRETE OR APPROVED EQUAL. M.F.G. CONFORMING TO ASTM C478, 5000 P.S.I. CONCRETE, TRAFFIC BEARING, AND O-RING JOINT CONFORMING TO ASTM C443.
F. INVERTS AND FLEXIBLE SEAL BOOTS, PER ASTM C-923, SHALL BE CAST INTO BASE SECTION.
G. MINIMUM DROP BETWEEN INVERTS SHALL BE ONE-TENTH OF A FOOT (0.1').
H. GRADE RINGS WITH AN I.D. TO MATCH FRAMES CLEAR OPENING WITH A MAXIMUM OF FIVE (5) GRADE RINGS ARE ALLOWED.

The Architect/Engineer assumes responsibility for appropriate use of this standard.

CITY OF GEORGETOWN CONSTRUCTION STANDARDS AND DETAILS — **STANDARD STORM SEWER MANHOLE PLAN** — SD12 — ADOPTED 6/21/2006

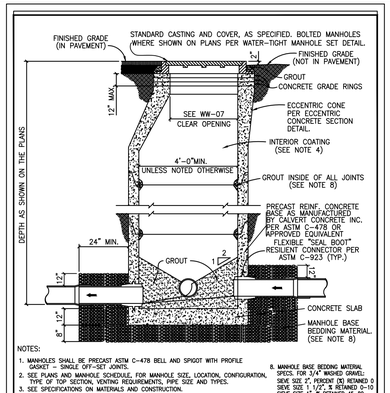

NOTES:
1. MANHOLES SHALL BE PRECAST ASTM C-478 BELL AND SPIGOT WITH PROFILE GASKET — SINGLE OFF-SET JOINTS.
2. SEE PLANS AND MANHOLE SCHEDULE, FOR MANHOLE SIZE, LOCATION, CONFIGURATION, TYPE OF TOP SECTION, VENTING REQUIREMENTS, PIPE SIZE AND TYPES.
3. SEE SPECIFICATIONS ON MATERIALS AND CONSTRUCTION.
4. AN 80 MIL COAT OF RAVEN LINING SYSTEMS, RAVEN 405 ULTRA HIGH BUILD EPOXY COATING, OR SPRAY WALL EPOXY COATING, OR APPROVED EQUAL, TO BE APPLIED TO ENTIRE INTERIOR OF EACH STORM SEWER MANHOLE AND UNDERSIDE OF FLAT TOPS.
5. ALL MANHOLE COVERS SHALL BE BOLTED AND GASKETTED WHEN MANHOLES ARE LOCATED OUT FROM PAVEMENT.
6. MANHOLES TO BE VENTED ARE IDENTIFIED ON MANHOLE SCHEDULE. REFERENCE MANHOLE VENT DETAIL.
7. MANHOLES ARE TO BE DESIGNED TO RESIST LATERAL AND VERTICAL SOIL FORCES RESULTING FROM MANHOLE DEPTH. ADDITIONALLY, MANHOLES LOCATED IN PAVEMENT TO BE DESIGNED FOR HS-20 TRAFFIC LOADS.
8. GROUT SHALL MEET THE REQUIREMENTS AS STATED BY THE COATING MANUFACTURER.
   SPECS. FOR 3/4" WASHED GRAVEL:
   SIEVE SIZE 1", PERCENT (%) RETAINED 0
   SIEVE SIZE 1 1/2", % RETAINED 0-10
   SIEVE SIZE 1", % RETAINED 45-80
   SIEVE SIZE 3/4" % RETAINED 85-100
   SIEVE SIZE 3/8", % RETAINED 95-100

The Architect/Engineer assumes responsibility for appropriate use of this standard.

CITY OF GEORGETOWN CONSTRUCTION STANDARDS AND DETAILS — **STANDARD STORM SEWER MANHOLE — SECTION** — SD13 — ADOPTED 6/21/2006

MINIMUM RIP-RAP QUANTITIES	
PIPE	SQ. YDS.
18"	6.2
24"	6.9
27"	7.8
30"	9.5
36"	10.4
42"	12.0
48"	14.3
54"	16.4

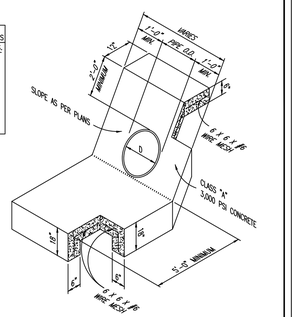

NOTES:
1. WHEN HEADWALLS AND WINGWALLS ARE REQUIRED, THEY SHALL CONFORM TO THE TEXAS DEPARTMENT OF TRANSPORTATION STANDARDS, OR AS DIRECTED BY THE CITY.
2. ENERGY DISSIPATERS SHALL BE REQUIRED IF PIPE VELOCITY IS GREATER THAN 5.0 F.P.S. OR AS DIRECTED BY THE CITY OF GEORGETOWN.
3. SUPPORT REINFORCING WIRE MESH REQUIRED AS SUPPORT FOR APPROACH SLAB AND SHALL BE SUPPORTED BY REBAR CHAIRS OR OTHER APPROVED METHODS.

The Architect/Engineer assumes responsibility for appropriate use of this standard.

CITY OF GEORGETOWN CONSTRUCTION STANDARDS AND DETAILS — **TYPICAL CONCRETE RIP-RAP AT PIPE** — SD19 — ADOPTED 6/21/2006

The Architect/Engineer assumes responsibility for appropriate use of this standard.

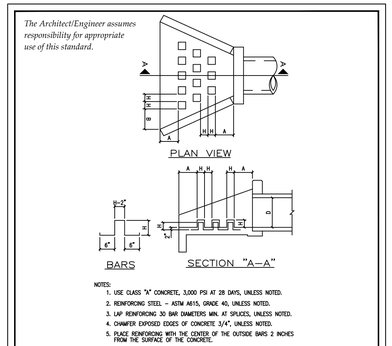

NOTES:
1. USE CLASS "A" CONCRETE, 3,000 PSI AT 28 DAYS, UNLESS NOTED.
2. REINFORCING STEEL - ASTM A615, GRADE 40, UNLESS NOTED.
3. LAP REINFORCING 30 BAR DIAMETERS MIN. AT SPLICES, UNLESS NOTED.
4. CHAMFER EXPOSED EDGES OF CONCRETE 3/4", UNLESS NOTED.
5. PLACE REINFORCING WITH THE CENTER OF THE OUTSIDE BARS 2 INCHES FROM THE SURFACE OF THE CONCRETE.

TABLE OF DIMENSIONS FOR ENERGY DISSIPATOR DETAIL

D PIPE DIAMETER (INCHES)	NUMBER OF ROWS OF DISSIPATORS	NUMBER OF DISSIPATORS IN FRONT ROW	H (INCHES)	A (INCHES)	B (INCHES)
12	1	3	4	4	9.1875
18	2	4	4 1/2	9 1/2	15.5625
24	2	5	6	14 3/4	16 1/2
30	3	6	7 1/2	12 1/2	14 3/8
36	3	6	9	16 1/4	18 5/16
42	3	6	10 1/2	20	22 1/4
48	3	6	12	23 3/4	26 1/4
54	3	6	13 1/2	27 1/2	27 3/4
60	3	6	15	31 1/4	31 5/8

CITY OF GEORGETOWN CONSTRUCTION STANDARDS AND DETAILS — **ENERGY DISSIPATER DETAIL** — SD20 — ADOPTED 6/21/2006

The Architect/Engineer assumes responsibility for appropriate use of this standard.

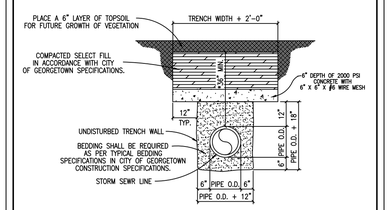

TRENCH WIDTHS
*PIPE LESS THAN 20" DIAMETER
1'-0" + PIPE O.D.
*20" DIAMETER PIPE AND LARGER
2'-0" + PIPE O.D.

The Architect/Engineer assumes responsibility for appropriate use of this standard.

CITY OF GEORGETOWN CONSTRUCTION STANDARDS AND DETAILS — **CONCRETE TRANCH CAP DETAIL FOR STORM SEWER** — SD39 — ADOPTED 6/21/2006

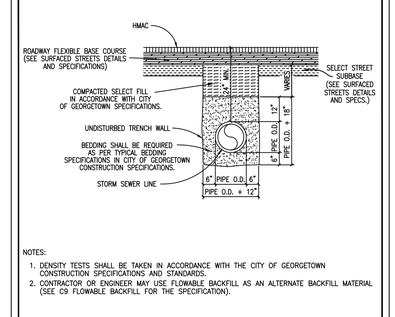

NOTES:
1. DENSITY TESTS SHALL BE TAKEN IN ACCORDANCE WITH THE CITY OF GEORGETOWN CONSTRUCTION SPECIFICATIONS AND STANDARDS.
2. CONTRACTOR OR ENGINEER MAY USE FLOWABLE BACKFILL AS AN ALTERNATE BACKFILL MATERIAL (SEE C9 FLOWABLE BACKFILL FOR THE SPECIFICATION).

TRENCH WIDTHS
*PIPE LESS THAN 20" DIAMETER
1'-0" + PIPE O.D.
*20" DIAMETER PIPE AND LARGER
2'-0" + PIPE O.D.

The Architect/Engineer assumes responsibility for appropriate use of this standard.

CITY OF GEORGETOWN CONSTRUCTION STANDARDS AND DETAILS — **TRENCH AND EMBEDMENT DETAIL UNDER PROPOSED ROADWAY FOR STORM SEWER** — SD41 — ADOPTED 6/21/2006

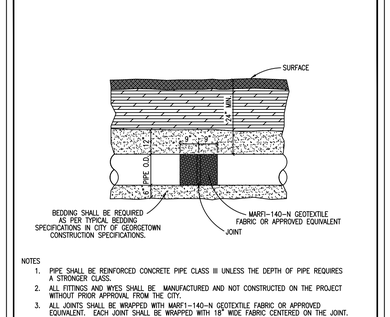

NOTES
1. PIPE SHALL BE REINFORCED CONCRETE PIPE CLASS III UNLESS THE DEPTH OF PIPE REQUIRES A STRONGER CLASS.
2. ALL FITTINGS AND WYES SHALL BE MANUFACTURED AND NOT CONSTRUCTED ON THE PROJECT WITHOUT PRIOR APPROVAL FROM THE CITY.
3. ALL JOINTS SHALL BE WRAPPED WITH MARFI-140-N GEOTEXTILE FABRIC OR APPROVED EQUIVALENT. EACH JOINT SHALL BE WRAPPED WITH 18" WIDE FABRIC CENTERED ON THE JOINT.

The Architect/Engineer assumes responsibility for appropriate use of this standard.

CITY OF GEORGETOWN CONSTRUCTION STANDARDS AND DETAILS — **TRENCH AND EMBEDMENT DETAIL (PROFILE) FOR STORM SEWER** — SD42 — ADOPTED 6/21/2006

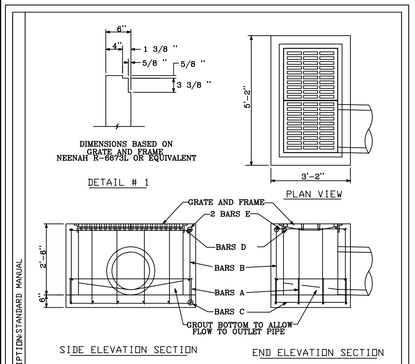

REINFORCING STEEL SCHEDULE					
BAR	QTY	SIZE	SPACING	LENGTH	WEIGHT
A	4	4	12"	6'-8"	18
B	16	4	12"	3'-0"	32
C	8	4	12"	2'-10"	15
D	4	4	12"	5'-2"	14
E	4	5	12"	2'-10"	12
				TOTAL WEIGHT---91 L.B.	

CITY OF AUSTIN
DRAINAGE UTILITY

RECORD COPY SIGNED BY ALLEN BARCHER — 6/24/88 — APPROVED — DATE

STANDARD DROP INLET
ADOPTED: 04-01-88
SCALE: N. T. S.
INITIAL: B. H.
STANDARD NO. 508-11

REV. DATE11-27-96 DESCRIPTION:STANDARD MANUAL

REV	DESCRIPTION	DATE	APR

DESIGNED BY: JG
REVIEWED BY: BG
DRAWN BY: JG

BGE
BROWN & GAY ENGINEERS, INC.
1701 DIRECTORS BLVD, SUITE 1000
AUSTIN, TX 78731
TBPE Registration No. F-1046
TEL: 512-879-0400 www.browngay.com

500 WESTINGHOUSE ROAD

THE LOCATION OF EXISTING UNDERGROUND UTILITIES ARE SHOWN IN AN APPROXIMATE WAY ONLY. THE CONTRACTOR SHALL DETERMINE THE EXACT LOCATIONS OF ALL EXISTING UTILITIES BEFORE COMMENCING WORK. HE AGREES TO BE FULLY RESPONSIBLE FOR ANY AND ALL DAMAGES WHICH MIGHT BE OCCASIONED BY HIS FAILURE TO EXACTLY LOCATE ADN PRESERVE ANY AND ALL UNDERGROUND UTILITIES.

811 Know what's below. Call before you dig.

ADDRESS: 500 WESTINGHOUSE ROAD

ASCEND WESTINGHOUSE
GEORGETOWN, TEXAS

DRAINAGE DETAILS (1 OF 2)

STATE OF TEXAS — BRIAN J. GRACE — 121846 — LICENSED PROFESSIONAL ENGINEER — 9/8/2020

SHEET 72 OF 76

2020-41-SDP

G:\TXC\Projects\DHI_Communities\7616-00-Westinghouse\LD\01_CADD\01_Sits\02_Site Plan\7616-C-SP-DETL-DRAINAGE.dwg Layout: DRAINAGE DETAILS (1 OF 2) Plotted: 9/21/2020 9:59:14 AM

TABLE OF DIMENSIONS AND REINFORCING STEEL
(Wings for one structure end)

Dimensions				Variable Reinforcing				Estimated Quantities per ft of wing length (2-wings) ③	
				Bars J1		Bars J2			
Maximum Wingwall Height Hw	W	X	Y	Z	Size	Spa	Size	Spa	Reinf (Lb/Ft)	Conc (CY/Ft)
2'-6"	2'-5"	1'-0"	9"	7"	#4	1'-0"	#4	1'-0"	33.73	0.248
3'-0"	2'-5"	1'-0"	9"	7"	#4	1'-0"	#4	1'-0"	37.07	0.261
3'-6"	2'-5"	1'-0"	9"	7"	#4	1'-0"	#4	1'-0"	37.74	0.273
4'-0"	2'-5"	1'-0"	9"	7"	#4	1'-0"	#4	1'-0"	38.41	0.285
4'-6"	3'-2"	1'-6"	1'-0"	7"	#4	1'-0"	#4	1'-0"	41.75	0.330
5'-0"	3'-2"	1'-6"	1'-0"	7"	#4	1'-0"	#4	1'-0"	45.09	0.341
5'-6"	3'-2"	1'-6"	1'-0"	7"	#4	1'-0"	#4	1'-0"	45.75	0.355
6'-0"	3'-2"	1'-6"	1'-0"	7"	#4	1'-0"	#4	1'-0"	46.42	0.367
7'-0"	3'-8"	1'-9"	1'-3"	7"	#4	1'-0"	#4	1'-0"	52.77	0.414
8'-0"	4'-2"	2'-0"	1'-6"	8"	#5	1'-0"	#4	1'-0"	60.19	0.486
9'-0"	4'-8"	2'-3"	1'-9"	8"	#4	6"	#4	6"	81.49	0.535
10'-0"	5'-2"	2'-6"	2'-0"	8"	#5	6"	#4	6"	97.25	0.584
11'-0"	5'-8"	2'-9"	2'-3"	8"	#6	6"	#5	6"	133.65	0.634
12'-0"	6'-2"	3'-0"	2'-6"	9"	#7	6"	#5	6"	162.29	0.721
13'-0"	6'-8"	3'-3"	2'-9"	11"	#7	6"	#5	6"	178.80	0.856
14'-0"	7'-2"	3'-6"	3'-0"	1'-0"	#8	6"	#5	6"	216.78	0.959
15'-0"	7'-8"	4'-0"	3'-0"	1'-1"	#9	6"	#6	6"	283.06	1.068
16'-0"	8'-2"	4'-6"	3'-0"	1'-3"	#9	6"	#6	6"	297.02	1.234

TABLE OF WINGWALL REINFORCING
(2-wings)

Bar	Size	No.	Spa
D	#5	~	1'-0"
E	#4	~	1'-0"
F	#4	~	1'-0"
G	#6	4	~
M	#4	4	~
P	#4	~	1'-0"
R	#5	6	~
V	#4	~	1'-0"

TABLE OF ESTIMATED CULVERT TOEWALL QUANTITIES

Bar	Size	No.	Spa
L	#4	~	1'-0"
Q	#4	1	~
Reinf (Lb/Ft)			2.45
Conc (CY/Ft)			0.037

WING DIMENSION FORMULAS:
(All values are in feet.)

$Hw = H + T + C - 0.250'$
$A = (Hw - 0.333') (SL)$
$B = (A)$ tangent $(30°)$
$Lw = (A) \div$ cosine $(30°)$

For cast-in-place culverts:
$Ltw = (N) (S) + (N + 1) (U)$

For precast culverts:
$Ltw = (N) (2U + S) + (N - 1) (0.5)$

Total wingwall area (two wings ~ SF) = $(Hw + 0.333') (Lw)$

Hw = Height of wingwall
SL:1 = Side slope ratio (horizontal:1 vertical)
Lw = Length of wingwall
Ltw = Culvert toewall length
N = Number of culvert spans

See applicable box culvert standard sheet for H, S, T, and U values.

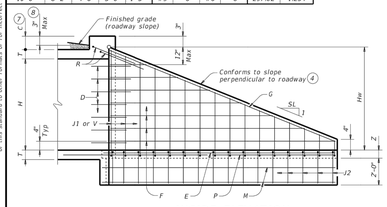

INSIDE ELEVATION
(Showing reinforcing. Culvert and culvert toewall reinforcing not shown for clarity.)

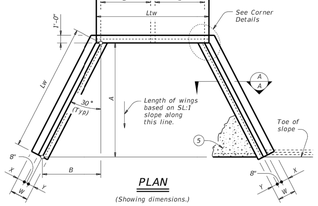

PLAN
(Showing dimensions.)

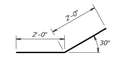

BARS D

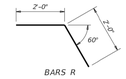

BARS R

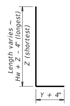

BARS J1

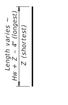

BARS V

BARS L

BARS J2

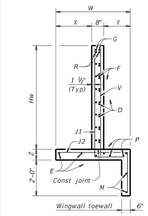

SECTION A-A

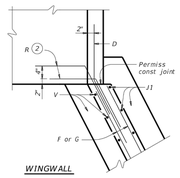

WINGWALL

CORNER DETAILS
(Culvert and culvert toewall reinforcing not shown for clarity.)

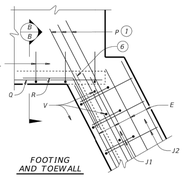

FOOTING AND TOEWALL

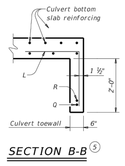

SECTION B-B ⑤

① Extend Bars P 3'-0" minimum into bottom slab of box culvert.

② Adjust as necessary to maintain 1 1#2" clear cover and 4" minimum between bars.

③ Quantities shown are based on an average wing height for two wings (one structure end). To determine total quantities for two wings, multiply the tabulated values by Lw.

④ Recommended values of side slope are: 2:1, 3:1, 4:1, and 6:1.

⑤ When shown elsewhere on the plans, construct 5" deep concrete riprap. Payment for riprap is as required by Item 432, "Riprap". Unless otherwise shown on the plans or directed by the Engineer, provide a 6" wide by 1'-6" deep reinforced concrete toewall along all edges of the riprap adjacent to natural ground; reinforce the toewall by extending typical riprap reinforcing into the toewall; and extend construction joints or grooved joints oriented in the direction of flow across the full distance of the riprap at intervals of approximately 20'. When such riprap is provided, the culvert toewall shown in SECTION B-B will not be required.

⑥ At Contractor's option, culvert toewall may be ended flush with wingwall toewall. Adjust reinforcing as needed.

⑦ 0" Min to 5'-0" Max. Estimated curb heights are shown elsewhere in the plans. For structures with pedestrian rail or curbs taller than 1'-0, refer to the Extended Curb Details (ECD) standard sheet. For structures with T631 or T631LS Bridge rail, refer to the Mounting Details for T631 & T631LS Bridge rail, refer to the Mounting Details for T631 & T631LS Rails (T631-CM) standard sheet. Refer to the Box Culvert Rail Mounting Details (RAC) standard sheet for structures with bridge rail other than T631 or T631LS.

⑧ For vehicle safety, the following requirements must be met:
- For structures without bridge rail, construct curbs no more than 3" above finished grade.
- For structures with bridge rail, construct curbs flush with finished grade.

Reduce curb heights, if necessary, to meet the above requirements. No changes will be made in quantities and no additional compensation will be allowed for this work.

MATERIAL NOTES:
Provide Class C concrete (f'c=3,600 psi).
Provide Grade 60 reinforcing steel.
Provide galvanized reinforcing steel if required elsewhere in the plans.
In riprap concrete synthetic fibers listed on the "Fibers for Concrete" Material Producer List (MPL) may be used in lieu of steel reinforcing unless noted otherwise.

GENERAL NOTES:
Designed according to AASHTO LRFD Bridge Design Specifications.
When structure is founded on solid rock, depth of toewalls for culverts and wingwalls may be reduced or eliminated as directed by the Engineer.
See Box Culvert Supplement (BCS) standard sheet for additional dimensions and information.
The quantities for concrete and reinforcing steel resulting from the formulas given on this sheet are for Contractor's information only.

Cover dimensions are clear dimensions, unless noted otherwise. Reinforcing dimensions are out-to-out of bars.

Texas Department of Transportation — Bridge Division Standard

CONCRETE WINGWALLS WITH FLARED WINGS FOR 0° SKEW BOX CULVERTS

FW-0

FILE: fw-0date-20.dgn	DN: GAF	CK: CAT	DW: TxDOT	CK: TxDOT
©TxDOT February 2020	CONT	SECT	JOB	HIGHWAY
REVISIONS				
	DIST		COUNTY	SHEET NO.

DATE FILE

THE LOCATION OF EXISTING UNDERGROUND UTILITIES ARE SHOWN IN AN APPROXIMATE WAY ONLY. THE CONTRACTOR SHALL DETERMINE THE EXACT LOCATION OF ALL EXISTING UTILITIES BEFORE COMMENCING WORK. HE AGREES TO BE FULLY RESPONSIBLE FOR ANY AND ALL DAMAGES WHICH MIGHT BE OCCASIONED BY HIS FAILURE TO EXACTLY LOCATE ADN PRESERVE ANY AND ALL UNDERGROUND UTILITIES.

811 Know what's below. Call before you dig.

ADDRESS: 500 WESTINGHOUSE ROAD

REV	DATE	DESCRIPTION	APR

DESIGNED BY: JG
REVIEWED BY: BG
DRAWN BY: JG

BGE
BROWN & GAY ENGINEERS, INC.
1701 DIRECTORS BLVD, SUITE 1000
AUSTIN, TX 78731
TBPE Registration No. F-1046
TEL: 512-879-0400 www.brownglay.com

500 WESTINGHOUSE ROAD

ASCEND WESTINGHOUSE
GEORGETOWN, TEXAS

DRAINAGE DETAILS (2 OF 2)

STATE OF TEXAS — BRIAN J. GRACE — 121846 — LICENSED PROFESSIONAL ENGINEER — 9/21/2020

SHEET 73 OF 76

2020-41-SDP

DISCLAIMER:
The use of this standard is governed by the "Texas Engineering Practice Act". No warranty of any kind is made by the Texas Department of Transportation for any purpose whatsoever. The Texas Department of Transportation disclaims liability for the damages resulting from its use on any project or for any purpose other than those shown and described.

G:\TXC\Projects\DHI_Communities\7616-00-Westinghouse\LD\01_CADD\01_Shts\02_Site Plan\7616-C-SP-DETL-DRAINAGE.dwg Layout: DRAINAGE DETAILS (2 OF 2) Plotted: 9/21/2020 9:59:16 AM

LEGEND:

- DIRECTION OF TRAFFIC FLOW
- TRAFFIC SIGN POST
- TYPE 3 BARRICADES
- WORK ZONE

NOTES:

1. ROADWAY POSTED @ 50 MPH

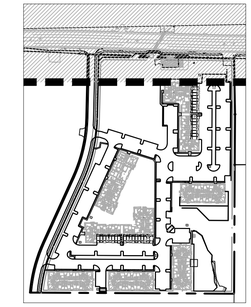

KEY MAP (N.T.S)

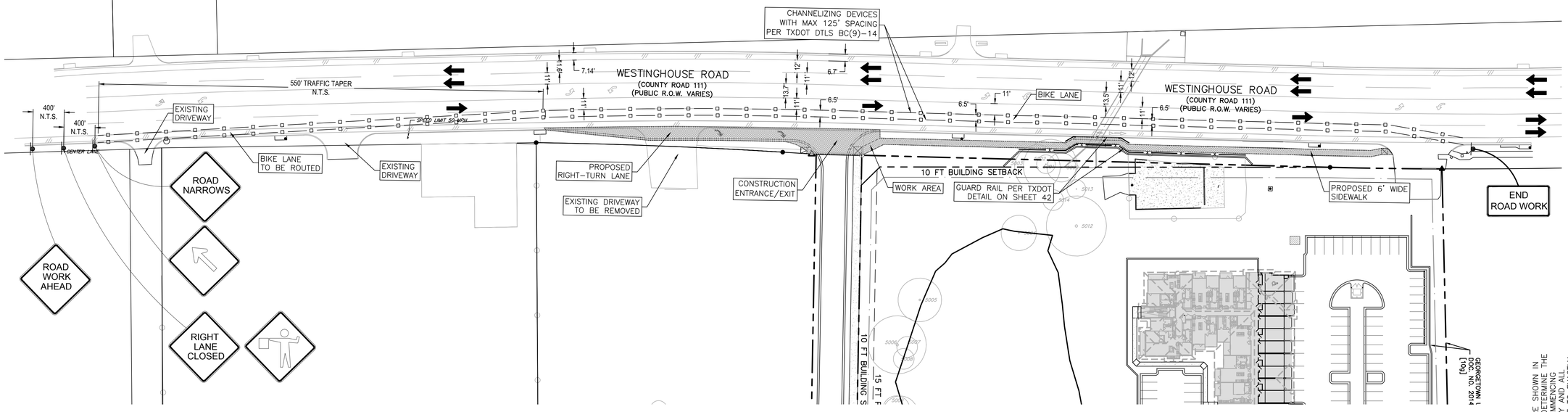

PORTABLE CHANGEABLE MESSAGE SIGN 1,000' FROM FIRST TRAFFIC CONTROL SIGN TO READ:
"RIGHT LANE CLOSED 1,000 FT "
"DRIVE WITH CARE"

THE LOCATION OF EXISTING UNDERGROUND UTILITIES ARE SHOWN IN AN APPROXIMATE WAY ONLY. THE CONTRACTOR SHALL DETERMINE EXACT LOCATIONS OF ALL EXISTING UTILITIES BEFORE COMMENCING WORK. HE AGREES TO BE FULLY RESPONSIBLE FOR ANY AND ALL DAMAGES WHICH MIGHT BE OCCASIONED BY HIS FAILURE TO EXACTLY LOCATE ADN PRESERVE ANY AND ALL UNDERGROUND UTILITIES.

811 Know what's below. Call before you dig.

ADDRESS: 500 WESTINGHOUSE ROAD

REV	DESCRIPTION	DATE	APR

DESIGNED BY: JG
REVIEWED BY: BG
DRAWN BY: JG

BGE

BROWN & GAY ENGINEERS, INC.
1701 DIRECTORS BLVD, SUITE 1000
AUSTIN, TX 78731
TBPE Registration No. F-1046
TEL 512-879-0400 www.browngay.com

ASCEND WESTINGHOUSE GEORGETOWN, TEXAS

TRAFFIC CONTROL PLAN

STATE OF TEXAS
BRIAN J. GRACE
121846
LICENSED
PROFESSIONAL ENGINEER
9/21/2020

SHEET 74 OF 76

500 WESTINGHOUSE ROAD

2020-41-SDP

G:\TXC\Projects\DHI_Communities\7616-00-Westinghouse\LD\01_CADD\01_Sits\02_Site Plan\7616-C-SP-TCP.dwg Layout: TCP Plotted: 9/21/2020 9:59:48 AM

G:\TXC\Projects\DHI_Communities\7616-00-Westinghouse\LD\01_CADD\01_Shts\02_Site Plan\7616-C-SP-TCP.dwg Layout: COA DTLS Plotted: 9/21/2020 9:59:49 AM

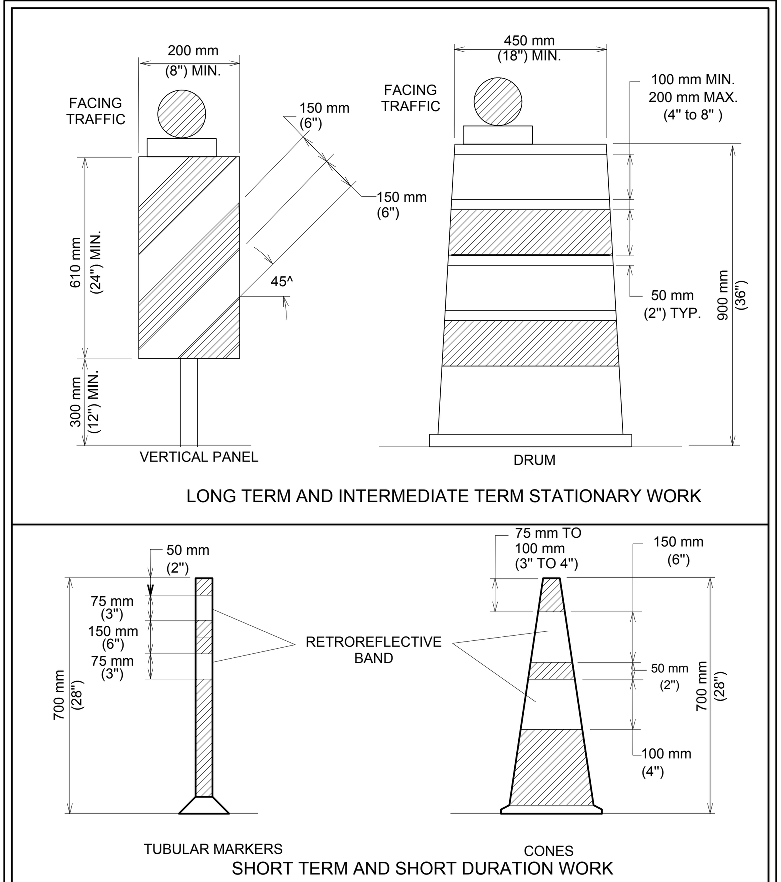

SEE STANDARD 804S-5
SHEET 12 OF 13 AND SHEET 13 OF 13
FOR GENERAL NOTES AND DEVICE SPACING.

CITY OF AUSTIN
DEPARTMENT OF PUBLIC WORKS
CHANNELIZING DEVICES
RECORD COPY SIGNED BY SAM ANGOORI *01/04/10* ADOPTED
THE ARCHITECT/ENGINEER ASSUMES RESPONSIBILITY FOR APPROPRIATE USE OF THIS STANDARD.
STANDARD NO. 804S-5 1 OF 13

CHANNELIZING DEVICES

1. ALL CHANNELIZING DEVICES SHALL HAVE WARNING LIGHTS OR LARGE REFLECTORS WHEN USED AT NIGHT. FLASHING WARNING LIGHTS MAY BE PLACED ON CHANNELIZING DEVICES USED SINGULARLY OR IN GROUPS TO MARK A SPOT CONDITION. WARNING LIGHTS ON CHANNELIZING DEVICES USED IN A SERIES SHALL BE STEADY-BURN. CHANNELIZING DEVICES IN TAPERS AT NIGHT SHALL HAVE TYPE C WARNING LIGHTS.
2. THE RETROREFLECTIVE MATERIAL USED ON CHANNELIZING DEVICES SHALL HAVE A SMOOTH, SEALED OUTER SURFACE.
3. THE NAME AND TELEPHONE NUMBER OF THE AGENCY, CONTRACTOR OR SUPPLIER SHALL BE SHOWN ON THE NON-RETROREFLECTIVE SURFACE OF ALL CHANNELIZING DEVICES. THE LETTERS AND NUMBERS SHALL BE A NON-RETROREFLECTIVE COLOR AND NOT OVER 50 mm (2") IN HEIGHT.
4. PARTICULAR ATTENTION SHOULD BE GIVEN TO ASSURE THAT CHANNELIZING DEVICES ARE MAINTAINED AND KEPT CLEAN, VISIBLE AND PROPERLY POSTITIONED AT ALL TIMES. DEVICES SHALL BE REPLACED THAT ARE DAMAGED AND HAVE LOST A SIGNIFICANT AMOUNT OF THEIR RETROREFLECTIVITY AND EFFECTIVENESS.

CONES

CONES SHALL PREDOMINANTLY BE ORANGE, FLUORESCENT RED-ORANGE, OR FLUORESCENT YELLOW-ORANGE IN COLOR, NOT LESS THAN 70 mm (28") IN HEIGHT, AND SHALL BE MADE OF A MATERIAL THAT CAN BE STRUCK WITHOUT DAMAGING VEHICLES ON IMPACT. FOR NIGHT TIME USE, CONES SHALL BE RETROREFLECTIVE OR EQUIPPED WITH LIGHTING DEVICES FOR MAXIMUM VISIBLITY. RETROREFLECTION OF CONES SHALL BE PROVIDED BY A WHITE BOND 150 mm (6") WIDE, NO MORE THAN 75 TO 100 mm (3 TO 4") FROM THE TOP OF THE CONE, AND AN ADDITIONAL 100 mm (4") WHITE BAND A MINIMUM OF 50 mm (2") BELOW THE 150 mm (6") BAND. TRAFFIC CONES ARE NORMALLY USED FOR SHORT-TERM STATIONARY AND SHORT DURATION WORK. HOWEVER, CONES MAY BE USED FOR INTERMEDIATE-TERM STATIONARY WORK AT NIGHT, IF THE SITE IS CONTINUOUSLY MANNED.

TUBULAR MARKERS

TUBULAR MARKERS SHALL PREDOMINANTLY BE ORANGE IN COLOR, NOT LESS THAN 700 mm (28") IN HEIGHT , A MINIMUM 50 mm (2") WIDE WHEN FACING TRAFFIC AND MADE OF A MATERIAL THAT CAN BE STRUCK WITHOUT DAMAGING VEHICLES. FOR NIGHT TIME USE, TUBLULAR MARKERS SHALL BE RETROREFLECTIVE PROVIDED BY TWO (2) 75 mm (3") WIDE WHITE BANDS PLACED A MAXIMUM OF 50 mm (2") FROM THE TOP, WITH A MAXIMUM OF 150 mm (6") BETWEEN BANDS. TUBULAR MARKERS ARE NORMALLY USED FOR SHORT-TERM STATIONARY AND SHORT DURATION WORK. HOWEVER, TUBULAR MARKERS MAY BE USED FOR INTERMEDIATE-TERM STATIONARY WORK AT NIGHT, IF THE SITE IS CONTINUOUSLY MANNED.

VERTICAL PANELS

VERTICAL PANELS SHALL BE 200 TO 300 mm (8 TO 12") WIDE AND AT LEAST 600 mm (24") IN HEIGHT. THEY SHALL HAVE ORANGE AND WHITE STRIPES, AND BE RETROREFLECTIVE. PANEL STRIPE WIDTHS SHALL BE 150 mm (6") EXCEPT WHERE PANEL HEIGHTS ARE LESS THAN 900 mm (36"), WHEN 100 mm (4") STRIPES MAY BE USED. IF USED FOR TWO-WAY TRAFFIC, BACK-TO-BACK PANELS SHALL BE USED.

DRUMS

1. DRUMS USED FOR TRAFFIC WARNING OR CHANNELIZATION SHALL BE CONSTRUCTED OF LIGHT-WEIGHT FLEXIBLE AND DEFORMABLE MATERIALS AND BE A MINIMUM OF 900 mm (36") IN HEIGHT, AND HAVE AT LEAST 450 mm (18") MINIMUM WIDTH, REGARDLESS OF OREINTATION. STEEL DRUMS SHALL NOT BE USED. THE MARKINGS ON DRUMS SHALL BE HORIZONTAL, CIRCUNFERENTIAL, ALTERNATING ORANGE AND WHITE RETROREFLECTIVE STRIPES 100 TO 200 mm (4 TO 8") WIDE. EACH DRUM SHALL HAVE A MINIMUM OF TWO (2) ORANGE AND TWO (2) WHITE STRIPES. ANY NON-RETROREFLECTIVE SPACES BETWEEN THE HORIZONTAL ORANGE AND WHITE STRIPES, SHALL NOT EXCEED 50 mm (2") WIDE. DRUMS SHALL HAVE CLOSED TOPS THAT WILL NOT ALLOW COLLECTION OF ROADWORK OR OTHER DEBRIS.
2. DRUMS SHOULD NOT BE WEIGHTED WITH SAND, WATER OR ANY MATERIAL TO AN EXTENT THAT WOULD MAKE THE HAZARDOUS TO MOTORISTS, PEDESTRIANS OR WORKERS. WHEN THEY ARE USED IN REGIONS SUSCEPTIBLE TO FREEZING, THEY SHOULD HAVE DRAINAGE HOLES IN THE BOTTOM SO WATER WILL NOT ACCUMULATE AND FREEZE,CAUSING A HAZARD IF STRUCK BY A MOTORIST. BALLAST SHALL NOT BE PLACED ON TOP OF THE DRUM.

CITY OF AUSTIN
DEPARTMENT OF PUBLIC WORKS
CHANNELIZING DEVICES
RECORD COPY SIGNED BY SAM ANGOORI *01/04/10* ADOPTED
THE ARCHITECT/ENGINEER ASSUMES RESPONSIBILITY FOR APPROPRIATE USE OF THIS STANDARD.
STANDARD NO. 804S-5 2 OF 13

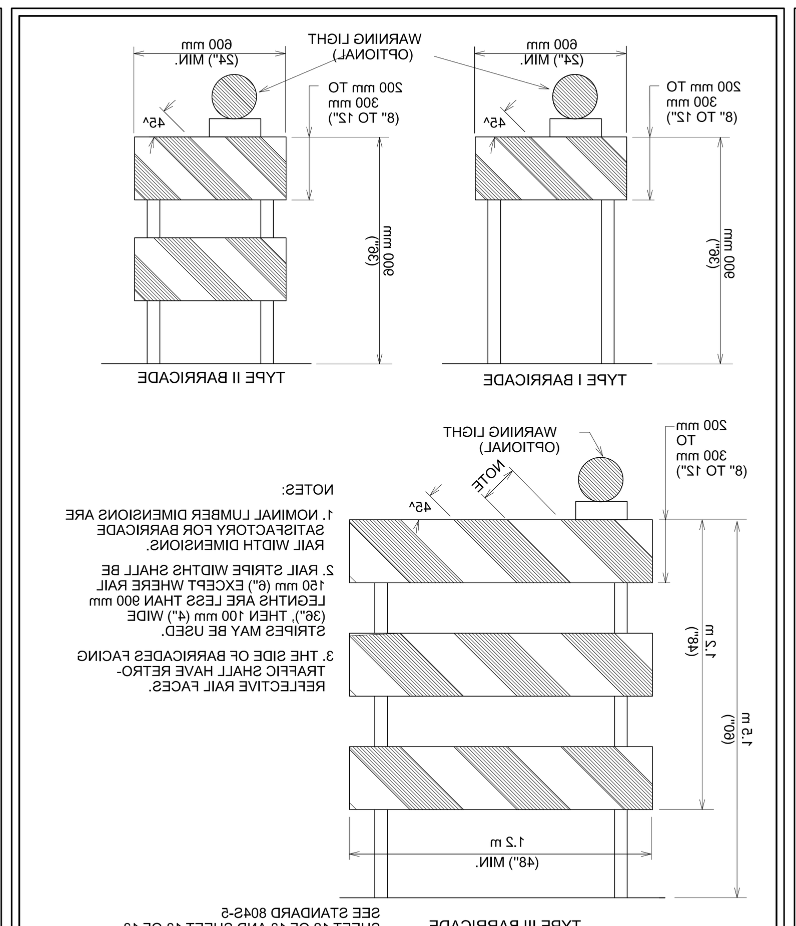

NOTES:
1. NOMINAL LUMBER DIMENSIONS ARE SATISFACTORY FOR BARRICADE RAIL WIDTH DIMENSIONS.
2. RAIL STRIPE WIDTHS SHALL BE 150 mm (6") EXCEPT WHERE RAIL LEGNTHS ARE LESS THAN 900 mm (36"), THEN 100 mm (4") WIDE STRIPES MAY BE USED.
3. THE SIDE OF BARRICADES FACING TRAFFIC SHALL HAVE RETRO-REFLECTIVE RAIL FACES.

SEE STANDARD 804S-5
SHEET 12 OF 13 AND SHEET 13 OF 13
FOR GENERAL NOTES AND DEVICE SPACING.

CITY OF AUSTIN
DEPARTMENT OF PUBLIC WORKS
BARRICADES
RECORD COPY SIGNED BY SAM ANGOORI *01/04/10* ADOPTED
THE ARCHITECT/ENGINEER ASSUMES RESPONSIBILITY FOR APPROPRIATE USE OF THIS STANDARD.
STANDARD NO. 804S-5 3 OF 13

BARRICADES

1. BARRICADES SHALL BE OF THREE TYPES: TYPE I, TYPE II OR TYPE III.
2. STRIPES ON BARRICADE RAILS SHALL BE ALTERNATING ORANGE AND WHITE RETRO-REFLECTIVE STRIPES (SLOPING DOWNWARD AT AN ANGLE OF 45 DEGREES IN THE DIRECTION TRAFFIC IS TO PASS). THE STRIPES SHALL BE 150 mm (6") WIDE, EXCEPT WHERE RAIL LENGTHS ARE LESS THAN 900 mm (36"), WHEN 100 mm (4") WIDE STRIPES MAY BE USED.
3. WHERE A BARRICADE EXTENDS ENTIRELY ACROSS A ROADWAY, THE SURFACE STRIPES SHOULD SLOPE DOWNWARD IN THE DIRECTION TOWARD WHICH TRAFFIC MUST TURN. WHERE BOTH RIGHT AND LEFT TURNS ARE PROVIDED, THE STRIPES MAY SLOPE DOWN-WARD IN BOTH DIRECTIONS FROM THE CENTER OF THE BARRICADE OR BARRICADES. WHERE NO TURNS ARE INTENDED, THE STRIPES SHOULD SLOPE DOWNWARD TOWARD THE CENTER OF THE BARRICADE OR BARRICADES.
4. BARRICADE RAILS SHOULD BE SUPPORTED IN A MANNER THAT WILL ALLOW THEM TO BE SEEN BY THE MOTORIST AND PROVIDE A STABLE SUPPORT NOT EASILY BLOWN OVER BY THE WIND OR TRAFFIC. FOR TYPE I BARRICADES, THE SUPPORT MAY INCLUDE OTHER UNSTRIPED HORIZONTAL PANELS NECESSARY TO PROVIDE STABILITY.
5. BARRICADES ARE LOCATED ADJACENT TO TRAFFIC AND ARE THEREFORE SUBJECT TO IMPACT WITH ERRANT VEHICLES. BECAUSE OF THEIR VULNERABLE POSITION AND THE HAZARD THEY COULD CREATE, THEY SHOULD BE CONSTRUCTED OF LIGHTWEIGHT MATERIALS AND HAVE NO RIGID STAY BRACING FOR A-FRAME DESIGNS. ALL BARRICADE SYSTEMS SHOULD BE CRASHWORTHY.
6. ON HIGH-SPEED EXPRESSWAYS OR IN OTHER SITUATION WHERE BARRICADES MAY BE SUSCEPTIBLE TO OVERTURING IN THE WIND, SANDBAGS SHOULD BE USED FOR BALLASTING. SANDBAGS MAY BE PLACED ON PARTS OF THE FRAME OR STAYS TO PROVIDE THE REQUIRED BALLAST BUT SHALL NOT BE PLACED ON TOP OF ANY STRIPED RAIL. BARRICADES SHALL NOT BE BALLASTED BY HEAVY OBJECTS SUCH AS ROCKS OR CHUNKS OF CONCRETE.

CITY OF AUSTIN
DEPARTMENT OF PUBLIC WORKS
BARRICADES
RECORD COPY SIGNED BY SAM ANGOORI *01/04/10* ADOPTED
THE ARCHITECT/ENGINEER ASSUMES RESPONSIBILITY FOR APPROPRIATE USE OF THIS STANDARD.
STANDARD NO. 804S-5 4 OF 13

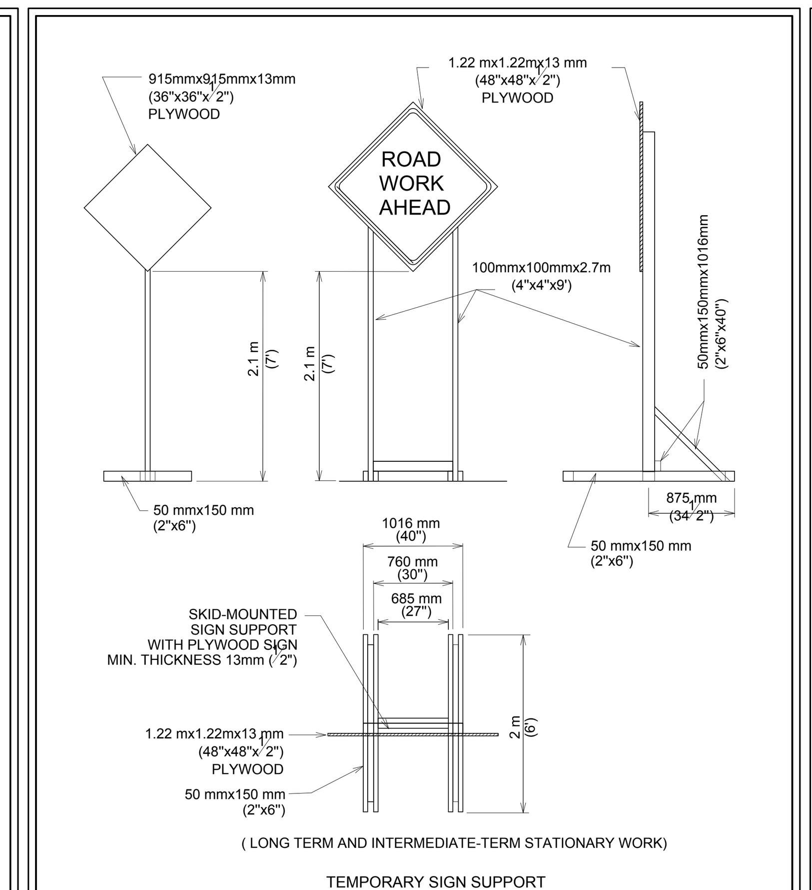

SEE STANDARD 804S-5
SHEET 12 OF 13 AND SHEET 13 OF 13
FOR GENERAL NOTES AND DEVICE SPACING.

CITY OF AUSTIN
DEPARTMENT OF PUBLIC WORKS
TRAFFIC CONTROL SIGNS
RECORD COPY SIGNED BY SAM ANGOORI *01/04/10* ADOPTED
THE ARCHITECT/ENGINEER ASSUMES RESPONSIBILITY FOR APPROPRIATE USE OF THIS STANDARD.
STANDARD NO. 804S-5 5 OF 13

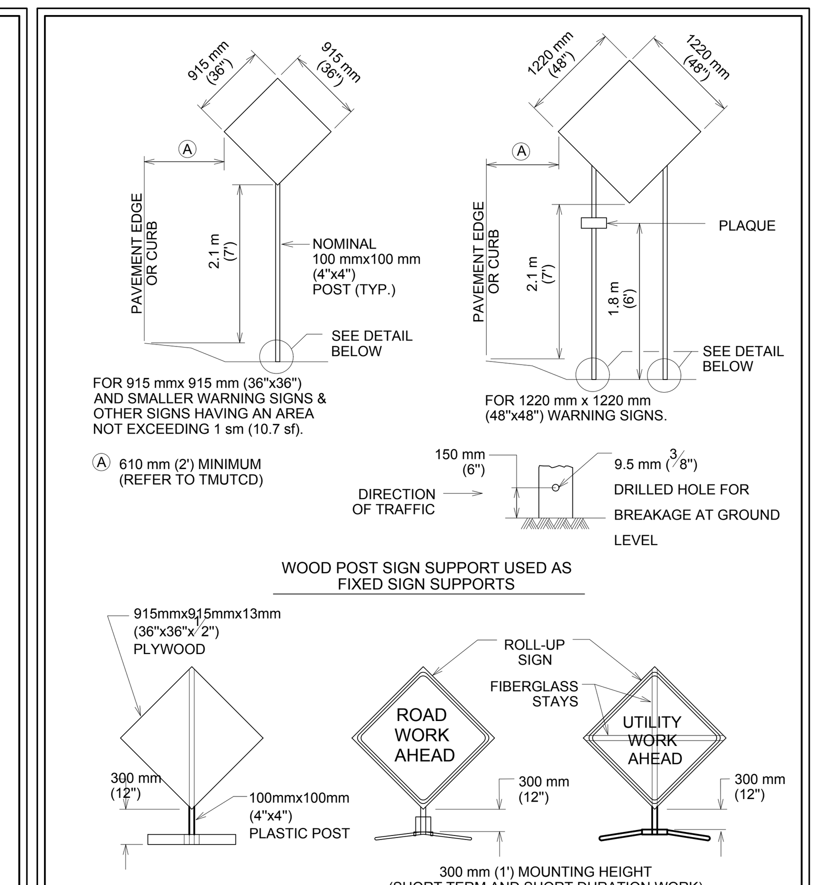

SEE STANDARD 804S-5
SHEET 12 OF 13 AND
SHEET 13 OF 13 FOR
GENERAL NOTES AND DEVICE SPACING.

CITY OF AUSTIN
DEPARTMENT OF PUBLIC WORKS
TRAFFIC CONTROL SIGNS
RECORD COPY SIGNED BY SAM ANGOORI *01/04/10* ADOPTED
THE ARCHITECT/ENGINEER ASSUMES RESPONSIBILITY FOR APPROPRIATE USE OF THIS STANDARD.
STANDARD NO. 804S-5 6 OF 13

---

1. WARNING SIGNS SHALL BE ORANGE, FLUORESCENT RED-ORANGE OR FLUORESCENT YELLOW-ORANGE IN COLOR. THE FLUORESCENT VERSIONS OF ORANGE PROVIDE HIGHER CONSPICUITY THAN STANDARD ORANGE, ESPECIALLY DURING TWILGHT. ALL SIGNS USED AT NIGHT SHALL BE EITHER RETRORE-FLECTIVE, WITH A MATERIAL THAT HAS A SMOOTH, SEALED OUTER SURFACE, OR ILLUMINATED TO SHOW SIMILAR SHAPE AND COLOR BOTH DAY AND NIGHT. SIGN ILLUMINATION MAY BE EITHER IN-TERNAL OR EXTERNAL. ROADWAY LIGHTING DOES NOT MEET THE REQUIREMENTS FOR SIGN ILLUMINATION.
2. TYPE A FLASHING WARNING LIGHTS MAY BE USED IN CONJUNCTION WITH SIGNS AT NIGHT. STANDARD ORANGE FLAGS MAY BE USED FOR DAY TIME OPERATIONS. HOWEVER, NEITHER LIGHTS NOR FLAGS MAY BLOCK THE SIGN LEGEND.
3. SIGNS SHOULD BE LOCATED ON THE RIGHT-HAND SIDE OF THE ROADWAY. WHEN SPECIAL EMPHASIS IS NEEDED, SIGNS MAY BE PLACE ON BOTH THE LEFT AND RIGHT SIDES OF ROADWAY. SIGNS SHALL BE PLACED ON BOTH THE LEFT AND RIGHT SIDES OF ONE-WAY OR DIVIDED ROADWAYS. SIGNS USED FOR LONG-TERM STATIONARY AND INTERMEDIATE-TERM STATIONARY WORK SHALL BE MOUNTED AT A HEIGHT OF AT LEAST 2.1 m (7'), MEASURED FROM THE BOTTOM OF THE SIGN. THE HEIGHT TO THE BOTTOM OF A SECONDARY SIGN MOUNTED BELOW ANOTHER SIGN MAY BE O.3 m (1') LESS THAN THE APPROPRIATE HEIGHT ABOVE.
4. SIGNS MAY BE MOUNTED ON PORTABLE SUPPORTS FOR SHORT-TERM, SHORT DURATION, MOBILE CON-DITIONS AND EMERGENCIES. SIGNS MOUNTED ON PORTABLE SUPPORTS SHALL BE AT A HEIGHT OF AT LEAST 0.3 m (1'), MEASURED FROM THE BOTTOM OF THE SIGN.
5. ALL SIGN SYSTEMS SHOULD BE CRASHWORTHY. NO SIGN MOUNTS SHALL BLOCK OR IMPEDE SIDEALKS UNLESS NO OTHER OPTION IS AVAILABLE. ONLY SANDBAGS SHOULD BE USED FOR BALLASTING SIGN MOUNTS.

TABLE VI-3 TYPICAL CONSTRUCTION WARNING SIGN SIZE AND SPACING

Roadway Classification	Posted Speed	Sign Spacing ☆	Long-term Stationary Or Intermediate-term Stationary Approaching Warning Signs CW20 Series And CW22-1 Sign: Standard	Long-term ...: Minimum4	Short-term Stationary Or Short Duration Approach Warning Signs CW22 Series: Standard	Short-term ...: Minimum4	Other Warning Signs: Standard
Conven.	KPH (MPH)	meter (feet)	mm (inches)	mm (inches)	mm (inches)	mm (inches)	mm (inches)
	50 (30)	40 (120)	1220x1220 (48x48)	915x915 (36x36)			
	55 (35)	50 (160)			915x915 (36x36)		915x915 (36x36)
	65 (40)	75 (240)					
	70 (45)	100 (320)		Use Standard Size		Use Standard Size	
	80 (50)	120 (400)					
	90 (55)	150 (500) 2					
	100 (60)	180 (600) 2			1220x1220 (48x48)		1220x1220 (48x48)
	105 (65)	210 (700) 2					
	115 (70)	240 (800) 2					
Exp. or Fwy	☆☆	☆☆ 3			☆☆☆	☆☆☆	☆☆☆

☆ MINIMUM DISTANCE FROM WORK TO 1st ADVANCE WARNING SIGN AND/OR DISTANCE BETWEEN EACH ADDITIONAL SIGN.
☆☆ FOR TYPICAL SIGN SPACINGS ON EXPRESSWAYS AND FREEWAYS, REFER TO THE CURRENT ADDITION OF TMUTCD.
☆☆☆ SMALLER SIGN SIZES MAY BE USED WHERE SIGN DESIGNS HAVE NOT BEEN INCLUDED IN THE "STANDARD HIGHWAY SIGNS DESIGN MANUAL".

1. SPECIAL OR LARGER SIZE SIGNS MAY BE USED AS NECESSARY.
2. DISTANCE BETWEEN SIGNS SHOULD BE INCREASED AS REQUIRED TO HAVE 450 m (1500') OR MORE ADVANCE WARNING.
3. DISTANCE BETWEEN SIGNS SHOULD BE INCREASED AS REQUIRED TO HAVE A 0.8 km (1/2 MILE) OR MORE ADVANCE WARNING.
4. FOR USE ONLY ON SECONDARY ROADS OR CITY STREETS WHERE SPEEDS ARE LOW.

CITY OF AUSTIN
DEPARTMENT OF PUBLIC WORKS
TRAFFIC CONTROL SIGNS
RECORD COPY SIGNED BY SAM ANGOORI *01/04/10* ADOPTED
THE ARCHITECT/ENGINEER ASSUMES RESPONSIBILITY FOR APPROPRIATE USE OF THIS STANDARD.
STANDARD NO. 804S-5 7 OF 13

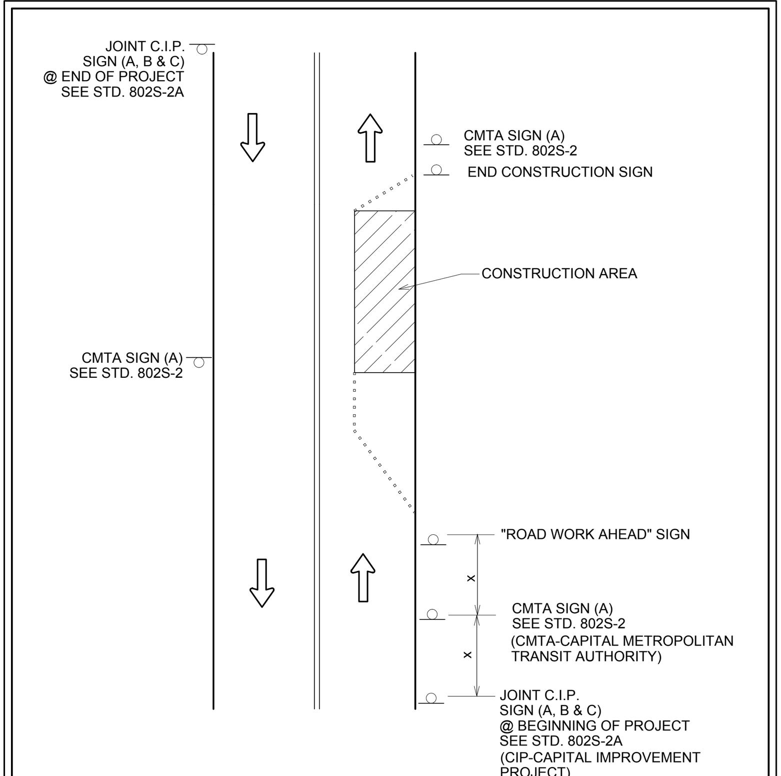

NOTES:
1. OTHER REQUIRED SIGNS NOT SHOWN FOR CLARITY.
2. "X" DISTANCES SAME AS STANDARD TABLE SHOWN ON SHEET 13 OF 13.

SEE STANDARD 804S-5
SHEET 12 OF 13 AND SHEET 13 OF 13
FOR GENERAL NOTES AND DEVICE SPACING.

CITY OF AUSTIN
DEPARTMENT OF PUBLIC WORKS
TYPICAL CMTA/C.I.P. SIGN LOCATIONS
RECORD COPY SIGNED BY SAM ANGOORI *01/04/10* ADOPTED
THE ARCHITECT/ENGINEER ASSUMES RESPONSIBILITY FOR APPROPRIATE USE OF THIS STANDARD.
STANDARD NO. 804S-5 8 OF 13

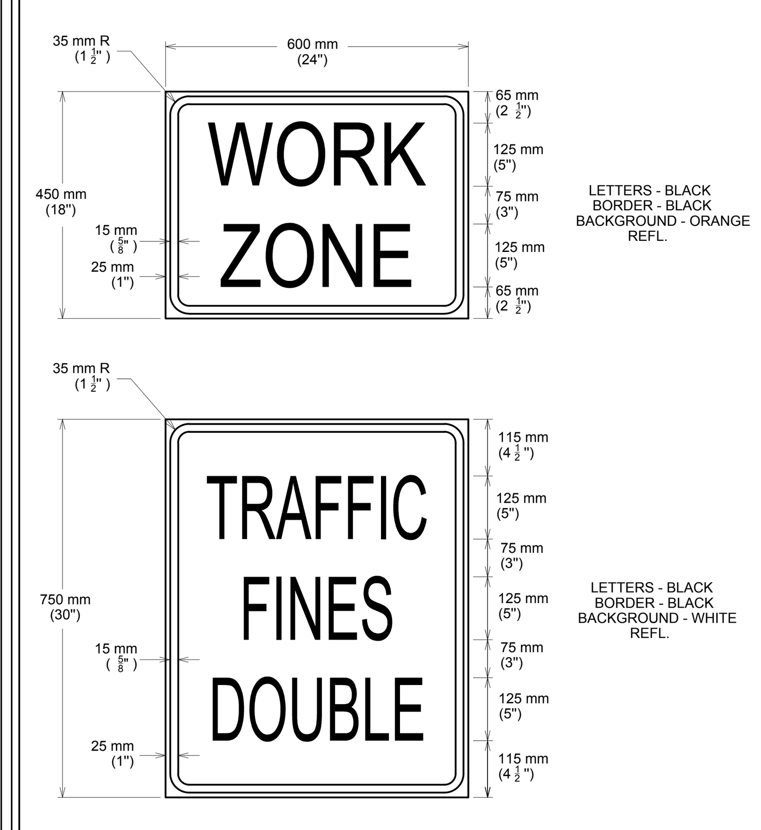

SEE STANDARD DETAIL 804S-5
SHEET 5 OF 13 FOR SKID-MOUNTED SIGN SUPPORT.

CITY OF AUSTIN
DEPARTMENT OF PUBLIC WORKS
SPECIAL WORK ZONE SIGNS
RECORD COPY SIGNED BY SAM ANGOORI *01/04/10* ADOPTED
THE ARCHITECT/ENGINEER ASSUMES RESPONSIBILITY FOR APPROPRIATE USE OF THIS STANDARD.
STANDARD NO. 804S-5 9 OF 13

---

1. ALL TRAFFIC CONTROL DEVICES, SIGNS, BARRICADES AND WARNING SIGNS SHALL BE FURNISHED, PLACED, CONSTRUCTED AND MAINTAINED IN THE APPROPRIATE TYPES AND SIZES AND FLAGGER OPERATIONS EXECUTED IN ACCORDANCE WITH THE CURRENT EDITION OF THE TEXAS MANUAL ON UNIFORM CONTROL DEVICES (TMUTCD), THE CITY OF AUSTIN STANDARD SPECIFICATIONS SERIES 800 AND THE CITY OF AUSTIN TRANS-PORTATION CRITERIA MANUAL, OR AS DIRECTED BY THE ENGINEER OR DESIGNATED RE-PRESENTATIVE. IF A CONFLICT ARISES THEN THE CITY OF AUSTIN TRANSPORTATION CRITERIA MANUAL SHALL CONTROL UNLESS OTHERWISE INSTRUCTED BY THE ENGINEER OR DESIGNATED REPRESENTATIVE.
2. THE CONTRACTOR SHALL NOTIFY THE TRANSPORTATION DIVISION OF THE DEPARTMENT OF PUBLIC WORKS AT 974-7024 NO LATER THAN THE MONDAY OF THE WEEK DURING WHICH THE CONTRACTOR INTENDS TO SET UP BARRICADES TO START CONSTRUCTION.
3. PROPOSED CONSTRUCTION TRAFFIC MOVEMENTS MAY REQUIRE EXISTING SIGNAL HEADS TO BE RELOCATED. THE CITY OF AUSTIN WILL REVIEW SIGNAL HEAD LOCATIONS DURING CONSTRUCTION AND PERFORM THE REQUIRED ADJUSTMENTS. THE CONTRACTOR SHALL CONTACT THE TRANSPORTATION DIVISION OF THE DEPARTMENT OF PUBLIC WORKS AT 974-7024, THREE (3) DAYS PRIOR TO PLACMENT ANY TRAFFIC CONTROLS WHICH MAY REQUIRE SIGNAL HEAD ADJUSTMENTS/RELOCATION.
4. THE CONTRACTOR SHALL PROVIDE ONE (1) FULL-TIME OFF-DUTY, UNIFORMED AUSTIN POLICE DEPARTMENT CERTIFIED PEACE OFFICER AND ONE (1) VEHICLE OF THE TYPE APPROVED BY THE ENGINEER OR DESIGNATED REPRESENTATIVE FOR TEMPORARY LANE CLOSURES WHEN UNDERSEALING, MILLING, PAVING AND WHEN WORKING IN INTERSECTIONS AS PART OF THE TRAFFIC CONTROL OPERATIONS. THE PEACE OFFICER SHALL BE ABLE TO SHOW PROOF OF CERTIFICATION BY THE TEXAS COMMISSION ON LAW ENFORCEMENT OFFICER STANDARDS.
5. THE CONTRACTOR SHALL NOTIFY ALL OTHER GOVERNMENTAL AGENCIES WHOSE RIGHTS-OF-WAY ARE AFFECTED BY HIS WORK ACTIVITIES. THE CONTRACTOR SHALL PROVIDE ANY ADDITIONAL TRAFFIC CONTROL DEVICES THAT THEY MAY NEED.
6. THE CONTRACTOR SHALL MAINTAIN ONE (1) DUST-FREE LANE OF TRAFFIC IN EACH DIRECTION AT ALL TIMES, UNLESS OTHERWISE NOTED IN THE DRAWINGS OR APPROVED THE ENGINEER OR DESIGNATED REPRESENTATIVE.
7. THERE SHALL BE A MINIMUM OF THREE (3) METERS (10 FEET) CLEAR WIDTH FOR EACH LANE OF TRAFFIC IN CHANNELIZED AREAS, UNLESS OTHERWISE NOTED ON THE DRAWINGS OR APPROVED BY THE ENGINEER OR DESIGNATED REPRESENTATIVE.
8. THE CONTRACTOR SHALL MAINTAIN DRIVEWAY ACCESS AT ALL TIMES. IF ACCESS CANNOT BE MAINTAINED, THE CONTRACTOR WITH THE APPROVAL OF THE ENGINEER OR DESIGNATED REPRESENTATIVE SHALL PROVIDE AT LEAST 24 HOUR WRITTEN NOTICE OF LIMITED ACCESS TO AFFECTED PROPERTY OWNERS. THE CONTRACTOR SHALL PROVIDE BUSINESS ACCESS SIGNS AS NEEDED TO NFORM DRIVERS OF THE LOCATIONS OF ALL DRIVEWAYS.
9. TEMPORARY LANE CLOSURES IN THE CENTRAL BUSINESS DISTRICT (CBD) OR ON ARTERIAL STREETS SHALL NOT BE PERMITTED DURING THE HOURS OF 7 AM TO 9 AM AND 4 PM TO 6PM MONDAY THROUGH FRIDAY UNLESS PRIOR APPROVAL HAS BEEN OBTAINED FROM THE TRANSPORTATION DIVISION.
10. TRAFFIC CONTROL SHOWN ON STANDARD DETAILS IS TYPICAL. ADDITIONAL SIGNING AND/ OR BARRICADING, AS WELL AS TEMPORARY PAVEMENT MARKINGS AND OBLITERATION/ RESTORATION OF EXISTING PAVEMENT MARKINGS, MAY BE REQUIRED DEPENDING ON FIELD CONDITIONS. FIELD ADJUSTMENTS TO TRAFFIC CONTROLS WILL NOT BE PAID FOR DIRECTLY, BUT WILL BE CONSIDERED SUBSIDIARY TO ITEM NO. 803S "BARRICADES, SIGNS AND TRAFFIC HANDLING".
11. THE CONTRACTOR SHALL DESIGNATE A COMPETENT PERSON FOR TRAFFIC CONTROL. THE COMPETENT PERSON SHALL MAKE INSPECTIONS OF THE TRAFFIC CONTROL DEVICES AT LEAST TWO (2) TIMES A DAY (ONCE AT THE BEGINNING OF THE DAY AND ONCE AT THE END OF THE DAY), INCLUDING NON-WORKING DAYS, ENSURING THAT ALL DEVICES ARE IN THEIR PROPER PLACE AND ARE IN WORKING ORDER.
12. ALL DEVICES SHALL BE MADE USING MATERIALS LISTED ON THE TxDOT APPROVED PRODUCTS LIST.

CITY OF AUSTIN
DEPARTMENT OF PUBLIC WORKS
GENERAL TRAFFIC CONTROL NOTES
RECORD COPY SIGNED BY SAM ANGOORI *01/04/10* ADOPTED
THE ARCHITECT/ENGINEER ASSUMES RESPONSIBILITY FOR APPROPRIATE USE OF THIS STANDARD.
STANDARD NO. 804S-5 12 OF 13

---

13. ALL PERSONS WORKING WITHIN THE RIGHT-OF-WAY SHALL WEAR A BRIGHTLY COLORED SAFETY VEST. FOR NIGHTTIME WORK THE VEST SHALL BE RETROREFLECTIVE,
14. WHEN AN INTERSECTION IS CLOSED FOR CONSTRUCTION, THE CONTRACTOR SHALL PROCEED WITH CONSTRUCTION IN SUCH A MANNER THAT THE CLOSURE TIME IS MINIMIZED.
15. THE CONTRACTOR SHALL NOTIFY THE CAPITAL METRO DISPATCHER AT 385-4295 ONE (1) WEEK PRIOR TO LANE CLOSURES ADJACENT TO BUS STOPS.

DURATION OF WORK

WORK DURATION IS A MAJOR FACTOR IN DETERMINING THE NUMBER AND TYPES OF DEVICES USED IN TEMPORARY TRAFFIC ZONES. THE FIVE (5) CATEGORIES OF WORK DURATION AND THEIR TIME AT A LOCATION ARE AS FOLLOWS:
- LONG-TERM STATIONARY-WORK THAT OCCUPIES A LOCATION FOR MORE THAN 3 DAYS.
- INTERMEDIATE-TERM STATIONARY-WORK THAT OCCUPIES A LOCATION FROM OVERNIGHT TO 3 DAYS.
- SHORT-TERM STATIONARY-DAYTIME WORK THAT OCCUPIES A LOCATION FROM 1 TO 12 HOURS.
- SHORT-DURATION WORK THAT OCCUPIES A LOCATION UP TO 1 HOUR.
- MOBILE-WORK THAT MOVES INTERMITTENTLY OR CONTINUOUSLY.

Typical Transition Lengths and Suggested Maximum Spacing of Devices

Posted Speed KPH (MPH)	Formula	Minimum Desirable Taper Lengths (L) Meters (Feet): 3.0(10) Offset Meters (feet)	3.3(11) Offset Meters (feet)	3.6(12) Offset Meters (feet)	Suggested Max. Device Spacing: On a taper Meters (feet)	On a tangent Meters (feet)	Suggested Sign Spacing Meters (Feet): "X" Dimension
50 (30)	$L=\frac{WS^2}{60}$	45 (150)	50 (165)	55 (180)	9 (30)	15-20 (60-75)	40 (120)
55 (35)		65 (205)	70 (225)	75 (245)	10 (35)	25-25 (70-90)	50 (160)
65 (40)		80 (265)	90 (295)	100 (320)	12 (40)	25-30 (80-100)	75 (240)
70 (45)	L=WS	135 (450)	(495)	165 (540)	13 (45)	25-30 (90-110)	100 (320)
80 (50)		150 (500)	165 (550)	180 (600)	15 (50)	30-35 (100-125)	120 (400)
90 (55)		165 (550)	185 (605)	200 (660)	16 (55)	35-40 (110-140)	150 (500)
100 (60)		180 (600)	200 (660)	220 (720)	18 (60)	40-45 (120-150)	180 (600)
105 (65)		195 (650)	215 (715)	235 (780)	19 (65)	40-50 (130-165)	210 (700)
115 (70)		215 (700)	235 (770)	255 (840)	21 (70)	45-55 (140-175)	240 (800)

CITY OF AUSTIN
DEPARTMENT OF PUBLIC WORKS
GENERAL TRAFFIC CONTROL NOTES
RECORD COPY SIGNED BY SAM ANGOORI *01/04/10* ADOPTED
THE ARCHITECT/ENGINEER ASSUMES RESPONSIBILITY FOR APPROPRIATE USE OF THIS STANDARD.
STANDARD NO. 804S-5 13 OF 13

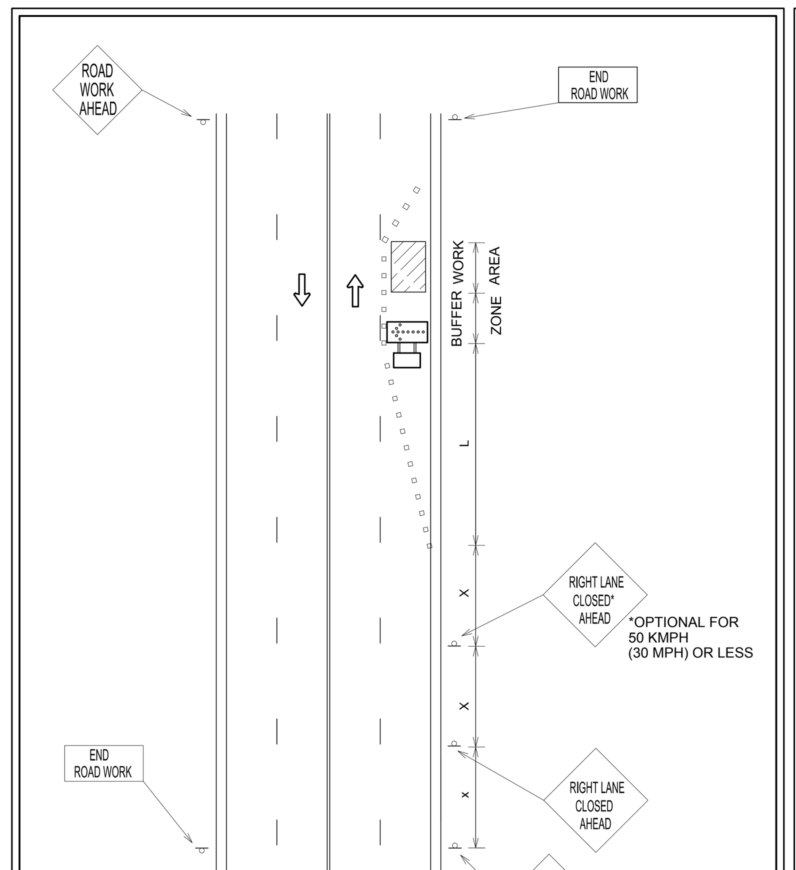

SEE SHEET 8 OF 9 FOR GENERAL NOTES AND SHEET 9 OF 9 FOR DEVICE SPACING.

CITY OF AUSTIN
DEPARTMENT OF PUBLIC WORKS
ARTERIAL ONE LANE CLOSURE
RECORD COPY SIGNED BY KERI JUAREZ 01/04/11 ADOPTED
THE ARCHITECT/ENGINEER ASSUMES RESPONSIBILITY FOR APPROPRIATE USE OF THIS STANDARD.
STANDARD NO. 804S-1 1 OF 9

---

1. ALL SETUPS SHALL BE IN ACCORDANCE WITH THE CURRENT ADDITION OF THE TEXAS MANUAL ON UNIFORM TRAFFIC CONTROL DEVICES AND THE CITY OF AUSTIN TRANSPORTATION CRITERIA MANUAL.
2. TO DETERMINE APPROPRIATE DEVICES AND SIGN SIZES TO BE USED, REFER TO STANDARD 804S-5. SHEETS 5, 6 AND 7 OF 11.
3. FOR INTERMEDIATE-TERM SITUATIONS, WHEN IT IS NOT FEASIBLE TO REMOVE AND RESTORE PAVEMENT MARKINGS, THE CHANNELIZATION MUST BE MADE DOMINANT BY USING A VERY CLOSE DEVICE SPACING. THIS IS ESPECIALLY IMPORTANT IN LOCATIONS OF CONFLICTING INFORMATION, SUCH AS WHERE TRAFFIC IS DIRECTED OVER A DOUBLE YELLOW CENTERLINE. IN SUCH LOCATIONS, A MAXIMUM CHANNELIZING DEVICE SPACING OF 3 m (10') IS REQUIRED.
4. FOR LONG TERM STATIONARY WORK, ALL CONFLICTING PAVEMENT MARKINGS MUST BE REMOVED AND CENTERLINE STRIPING PROVIDED WHERE TWO WAY TRAFFIC IS IN ADJACENT LANES.
5. FOR TEMPORARY PAVEMENT MARKING REQUIREMENTS SEE STANDARD 804S-3.
6. FOR ONE-WAY AND MULTI-LANE ROADWAYS THE "LANE BLOCKED" SIGN MAY BE USED IN LIEU OF THE "LANE CLOSED AHEAD" SIGN. THE NUMBER OF DIGITS ON THE SIGN SHALL NOT BE GREATER THAN THE NUMBER OF LANES PRESENT ON THE ROADWAY. THE "X" SHALL BE PLACED UNDER THE NUMBER OF LANE(S) BLOCKED.
7. FOR FLAGGING OPERATION REQUIREMENTS SEE STANDARD 804S-2.
8. CONTRACTOR SHALL PROVIDE SIDEWALK CLOSURES, CROSSWALK CLOSURES OR WALKWAY BYPASS WHEREVER PEDESTRIAN MOVEMENTS ARE AFFECTED BY CONSTRUCTION ACTIVITIES. ALL SIDEWALKS AND CROSSWALKS SHALL BE ACCESSIBLE WHEN CONTRACTOR IS NOT WORKING UNLESS APPROVED BY THE TRANSPORTATION DIVISION.
9. FOR EXCAVATION PROTECTION AND SAFETY FENCE REQUIREMENTS SEE STANDARD 804S-4.
10. THE USE OF ARROW DISPLAYS ARE REQUIRED ON ALL LANE CLOSURES. THE CONTRACTOR SHALL PROVIDE ONE (1) STAND-BY UNIT IN GOOD WORKING CONDITION AT THE JOB SITE, READY FOR USE IF THE OPERATION REQUIRES 24-HOUR A DAY LANE CLOSURE SET-UPS.

CITY OF AUSTIN
DEPARTMENT OF PUBLIC WORKS
GENERAL NOTES
RECORD COPY SIGNED BY KERI JUAREZ 01/04/11 ADOPTED
THE ARCHITECT/ENGINEER ASSUMES RESPONSIBILITY FOR APPROPRIATE USE OF THIS STANDARD.
STANDARD NO. 804S-1 8 OF 9

Typical Transition Lengths and Suggested Maximum Spacing of Devices

Speed KMPH	Posted Speed MPH	Formula	Minimum Desirable Taper Lengths (L) Meters (Feet): 3.0(10) Offset Meters (feet)	3.3(11) Offset Meters (feet)	3.6(12) Offset Meters (feet)	Suggested Max. Device Spacing: On a taper Meters (feet)	On a tangent Meters (feet)	Suggested Sign Spacing Meters (Feet): "X" Dimension
50	30	$L=\frac{WS^2}{60}$	45 (150)	50 (165)	55 (180)	9 (30)	15-20 (60-75)	40 (120)
55	35		65 (205)	70 (225)	75 (245)	10 (35)	25-25 (70-90)	50 (160)
65	40		80 (265)	90 (295)	100 (320)	12 (40)	25-30 (80-100)	75 (240)
70	45	L=WS	135 (450)	150 (495)	165 (540)	13 (45)	25-30 (90-110)	100 (320)
80	50		150 (500)	165 (550)	180 (600)	15 (50)	30-35 (100-125)	120 (400)
90	55		165 (550)	185 (605)	200 (660)	16 (55)	35-40 (110-140)	150 (500)
95	60		180 (600)	200 (660)	220 (720)	18 (60)	40-45 (120-150)	180 (600)
105	65		195 (650)	215 (715)	235 (780)	19 (65)	40-50 (130-165)	210 (700)
115	70		215 (700)	235 (770)	255 (840)	21 (70)	45-55 (140-175)	240 (800)

LEGEND
- Channelizing devices
- Trailer mounted flashing arrow board
- Flagger

CITY OF AUSTIN
DEPARTMENT OF PUBLIC WORKS
DEVICE SPACING
RECORD COPY SIGNED BY KERI JUAREZ 01/04/11 ADOPTED
THE ARCHITECT/ENGINEER ASSUMES RESPONSIBILITY FOR APPROPRIATE USE OF THIS STANDARD.
STANDARD NO. 804S-1 9 OF 9

Know what's below. Call before you dig. 811

THE LOCATION OF EXISTING UNDERGROUND UTILITIES ARE SHOWN IN AN APPROXIMATE WAY ONLY. THE CONTRACTOR SHALL DETERMINE THE EXACT LOCATION OF ALL EXISTING UTILITIES BEFORE COMMENCING WORK. HE AGREES TO BE FULLY RESPONSIBLE FOR ANY AND ALL DAMAGES WHICH MIGHT BE OCCASIONED BY HIS FAILURE TO EXACTLY LOCATE ADN PRESERVE ANY AND ALL UNDERGROUND UTILITIES.

ADDRESS: 500 WESTINGHOUSE ROAD

REV	DESCRIPTION	DATE	APR

DESIGNED BY: JG
REVIEWED BY: BG
DRAWN BY: JG

BGE
BROWN & GAY ENGINEERS, INC.
1701 DIRECTORS BLVD., SUITE 1000
AUSTIN, TX 78731
TBPE Registration No. F-1046
TEL: 512-879-0400 www.browngay.com

500 WESTINGHOUSE ROAD

ASCEND WESTINGHOUSE
GEORGETOWN, TEXAS

TRAFFIC CONTROL DETAILS (1 OF 2)

STATE OF TEXAS
BRIAN J. GRACE
121846
LICENSED PROFESSIONAL ENGINEER
9/21/2020

2020-41-SDP

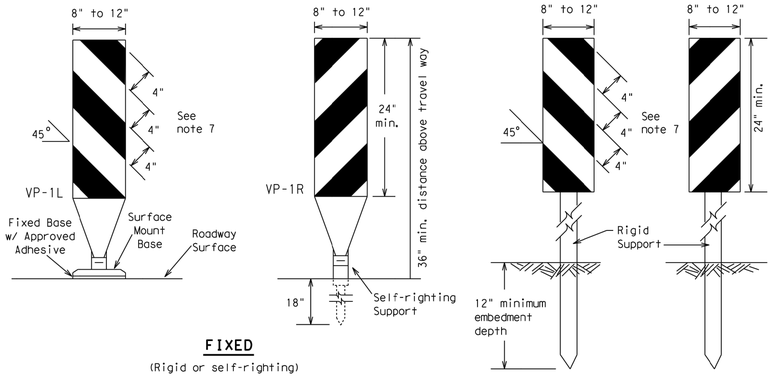

FIXED

(Rigid or self-righting)

DRIVEABLE

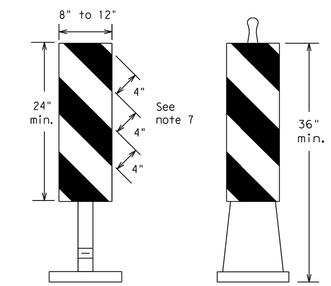

(Rigid or self-righting)

PORTABLE

1. Vertical Panels (VP's) are normally used to channelize traffic or divide opposing lanes of traffic.
2. VP's may be used in daytime or nighttime situations. They may be used at the edge of shoulder drop-offs and other areas such as lane transitions where positive daytime and nighttime delineation is required. The Engineer/Inspector shall refer to the Roadway Design Manual Appendix B "Treatment of Pavement Drop-offs in Work Zones" for additional guidelines on the use of VP's for drop-offs.
3. VP's should be mounted back to back if used at the edge of cuts adjacent to two-way two lane roadways. Stripes are to be reflective orange and reflective white and should always slope downward toward the travel lane.
4. VP's used on expressways and freeways or other high speed roadways, may have more than 270 square inches of retroreflective area facing traffic.
5. Self-righting supports are available with portable base. See "Compliant Work Zone Traffic Control Devices List" (CWZTCD).
6. Sheeting for the VP's shall be retroreflective Type A conforming to Departmental Material Specification DMS-8300, unless noted otherwise.
7. Where the height of reflective material on the vertical panel is 36 inches or greater, a panel stripe of 6 inches shall be used.

VERTICAL PANELS (VPs)

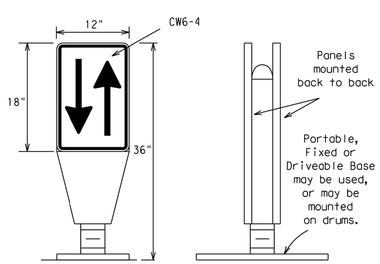

1. Opposing Traffic Lane Dividers (OTLD) are delineation devices designed to convert a normal one-way roadway section to two-way operation. OTLD's are used on temporary centerlines. The upward and downward arrows on the sign's face indicate the direction of traffic on either side of the divider. The base is secured to the pavement with an adhesive or rubber weight to minimize movement caused by a vehicle impact or wind gust.
2. The OTLD may be used in combination with 42" cones or VPs.
3. Spacing between the OTLD shall not exceed 500 feet. 42" cones or VPs placed between the OTLD's should not exceed 100 foot spacing.
4. The OTLD shall be orange with a black non-reflective legend. Sheeting for the OTLD shall be retroreflective Type B_{FL} or Type C_{FL} conforming to Departmental Material Specification DMS-8300, unless noted otherwise. The legend shall meet the requirements of DMS-8300.

OPPOSING TRAFFIC LANE DIVIDERS (OTLD)

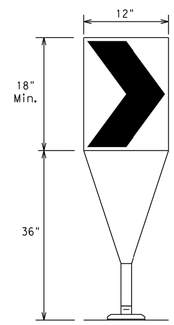

Fixed Base w/ Approved Adhesive (Driveable Base, or Flexible Support can be used)

1. The chevron shall be a vertical rectangle with a minimum size of 12 by 18 inches.
2. Chevrons are intended to give notice of a sharp change of alignment with the direction of travel and provide additional emphasis and guidance for vehicle operators with regard to changes in horizontal alignment of the roadway.
3. Chevrons, when used, shall be erected on the outside of a sharp curve or turn, or on the far side of an intersection. They shall be in line with and at right angles to approaching traffic. Spacing should be such that the motorist always has three in view, until the change in alignment eliminates its need.
4. To be effective, the chevron should be visible for at least 500 feet.
5. Chevrons shall be orange with a black nonreflective legend. Sheeting for the chevron shall be retroreflective Type B_{FL} or Type C_{FL} conforming to Departmental Material Specification DMS-8300, unless noted otherwise. The legend shall meet the requirements of DMS-8300.
6. For Long Term Stationary use on tapers or transitions on freeways and divided highways self-righting chevrons may be used to supplement plastic drums but not to replace plastic drums.

CHEVRONS

GENERAL NOTES

1. Work Zone channelizing devices illustrated on this sheet may be installed in close proximity to traffic and are suitable for use on high or low speed roadways. The Engineer/Inspector shall ensure that spacing and placement is uniform and in accordance with the "Texas Manual on Uniform Traffic Control Devices" (TMUTCD).
2. Channelizing devices shown on this sheet may have a driveable, fixed or portable base. The requirement for self-righting channelizing devices must be specified in the General Notes or other plan sheets.
3. Channelizing devices on self-righting supports should be used in work zone areas where channelizing devices are frequently impacted by errant vehicles or vehicle related wind gusts making alignment of the channelizing devices difficult to maintain. Locations of these devices shall be detailed elsewhere in the plans. These devices shall conform to the TMUTCD and the "Compliant Work Zone Traffic Control Devices List" (CWZTCD).
4. The Contractor shall maintain devices in a clean condition and replace damaged, nonreflective, faded, or broken devices and bases as required by the Engineer/Inspector. The Contractor shall be required to maintain proper device spacing and alignment.
5. Portable bases shall be fabricated from virgin and/or recycled rubber. The portable bases shall weigh a minimum of 30 lbs.
6. Pavement surfaces shall be prepared in a manner that ensures proper bonding between the adhesives, the fixed mount bases and the pavement surface. Adhesives shall be prepared and applied according to the manufacturer's recommendations.
7. The installation and removal of channelizing devices shall not cause detrimental effects to the final pavement surfaces, including pavement surface discoloration or surface integrity. Driveable bases shall not be permitted on final pavement surfaces. The Engineer/Inspector shall approve all application and removal procedures of fixed bases.

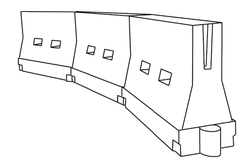

LONGITUDINAL CHANNELIZING DEVICES (LCD)

1. LCDs are crashworthy, lightweight, deformable devices that are highly visible, have good target value and can be connected together. They are not designed to contain or redirect a vehicle on impact.
2. LCDs may be used instead of a line of cones or drums.
3. LCDs shall be placed in accordance to application and installation requirements specific to the device, and used only when shown on the CWZTCD list.
4. LCDs should not be used to provide positive protection for obstacles, pedestrians or workers.
5. LCDs shall be supplemented with retroreflective delineation as required for temporary barriers on BC(7) when placed roughly parallel to the travel lanes.
6. LCDs used as barricades placed perpendicular to traffic should have at least one row of reflective sheeting meeting the requirements for barricade rails as shown on BC(10) placed near the top of the LCD along the full length of the device.

WATER BALLASTED SYSTEMS USED AS BARRIERS

1. Water ballasted systems used as barriers shall not be used solely to channelize road users, but also to protect the work space per the appropriate NCHRP 350 crashworthiness requirements based on roadway speed and barrier application.
2. Water ballasted systems used to channelize vehicular traffic shall be supplemented with retroreflective delineation or channelizing devices to improve daytime/nighttime visibility. They may also be supplemented with pavement markings.
3. Water ballasted systems used as barriers shall be placed in accordance to application and installation requirements specific to the device, and used only when shown on the CWZTCD list.
4. Water ballasted systems used as barriers should not be used for a merging taper except in low speed (less than 45 MPH) urban areas. When used on a taper in a low speed urban area, the taper shall be delineated and the taper length should be designed to optimize road user operations considering the available geometric conditions.
5. When water ballasted systems used as barriers have blunt ends exposed to traffic, they should be attenuated as per manufacturer recommendations or flared to a point outside the clear zone.

If used to channelize pedestrians, longitudinal channelizing devices or water ballasted systems must have a continuous detectable bottom for users of long canes and the top of the unit shall not be less than 32 inches in height.

HOLLOW OR WATER BALLASTED SYSTEMS USED AS LONGITUDINAL CHANNELIZING DEVICES OR BARRIERS

Posted Speed *	Formula	Minimum Desirable Taper Lengths ** 10' Offset	11' Offset	12' Offset	Suggested Maximum Spacing of Channelizing Devices: On a Taper	On a Tangent
30	$L = \frac{WS^2}{60}$	150'	165'	180'	30'	60'
35		205'	225'	245'	35'	70'
40		265'	295'	320'	40'	80'
45	L = WS	450'	495'	540'	45'	90'
50		500'	550'	600'	50'	100'
55		550'	605'	660'	55'	110'
60		600'	660'	720'	60'	120'
65		650'	715'	780'	65'	130'
70		700'	770'	840'	70'	140'
75		750'	825'	900'	75'	150'
80		800'	880'	960'	80'	160'

** Taper lengths have been rounded off.
L=Length of Taper (FT.) W=Width of Offset (FT.)
S=Posted Speed (MPH)

SUGGESTED MAXIMUM SPACING OF CHANNELIZING DEVICES AND MINIMUM DESIRABLE TAPER LENGTHS

SHEET 9 OF 12

Texas Department of Transportation — Traffic Operations Division Standard

BARRICADE AND CONSTRUCTION CHANNELIZING DEVICES

BC(9)-14

FILE: bc-14.dgn	DN: TxDOT	CK: TxDOT	DW: TxDOT	CK: TxDOT
© TxDOT November 2002	CONT	SECT	JOB	HIGHWAY
REVISIONS 9-07 8-14 7-13	DIST		COUNTY	SHEET NO.

103

DISCLAIMER:
The use of this standard is governed by the "Texas Engineering Practice Act". No warranty of any kind is made by TxDOT for any purpose whatsoever. TxDOT assumes no responsibility for the conversion of this standard to other formats or for incorrect results or damages resulting from its use.

DATE:
FILE:

G:\TXC\Projects\DHI_Communities\7616-00-Westinghouse\LD\01_CADD\01_Shts\02_Site Plan\7616-C-SP-TCP.dwg Layout: TXDOT DTLS Plotted: 9/21/2020 9:59:50 AM

REV	DESCRIPTION	DATE	APR

DESIGNED BY: JG
REVIEWED BY: BG
DRAWN BY: JG

BROWN & GAY ENGINEERS, INC.
1701 DIRECTORS BLVD, SUITE 1000
AUSTIN, TX 78731
TBPE Registration No. F-1046
TEL: 512-879-0400 www.brownggy.com

500 WESTINGHOUSE ROAD

THE LOCATION OF EXISTING UNDERGROUND UTILITIES ARE SHOWN IN AN APPROXIMATE WAY ONLY. THE CONTRACTOR SHALL DETERMINE THE EXACT LOCATIONS OF ALL EXISTING UTILITIES BEFORE COMMENCING WORK. HE AGREES TO BE SOLELY RESPONSIBLE FOR ANY AND ALL DAMAGES WHICH MIGHT BE OCCASIONED BY HIS FAILURE TO EXACTLY LOCATE ADN PRESERVE ANY AND ALL UNDERGROUND UTILITIES.

Know what's below. Call before you dig.

ASCEND WESTINGHOUSE
GEORGETOWN, TEXAS

TRAFFIC CONTRL DETAILS (2 OF 2)

ADDRESS: 500 WESTINGHOUSE ROAD

STATE OF TEXAS
BRIAN J. GRACE
121846
LICENSED PROFESSIONAL ENGINEER
9/21/2020

2020-41-SDP

SHEET 76 OF 76