Contributing Zone Plan Checklist

- **Edwards Aquifer Application Cover Page (TCEQ-20705)**
- **Contributing Zone Plan Application (TCEQ-10257)**

  Attachment A - Road Map
  Attachment B - USGS Quadrangle Map
  Attachment C - Project Narrative
  Attachment D - Factors Affecting Surface Water Quality
  Attachment E - Volume and Character of Stormwater
  Attachment F - Suitability Letter from Authorized Agent (if OSSF is proposed)
  Attachment G - Alternative Secondary Containment Methods (if AST with an alternative method of secondary containment is proposed)
  Attachment H - AST Containment Structure Drawings (if AST is proposed)
  Attachment I - 20% or Less Impervious Cover Declaration (if project is multi-family residential, a school, or a small business and 20% or less impervious cover is proposed for the site)
  Attachment J - BMPs for Upgradient Stormwater
  Attachment K - BMPs for On-site Stormwater
  Attachment L - BMPs for Surface Streams
  Attachment M - Construction Plans
  Attachment N - Inspection, Maintenance, Repair and Retrofit Plan
  Attachment O - Pilot-Scale Field Testing Plan, if BMPs not based on Complying with the Edwards Aquifer Rules: Technical Guidance for BMPs
  Attachment P - Measures for Minimizing Surface Stream Contamination

- **Storm Water Pollution Prevention Plan (SWPPP)**

-OR-

- **Temporary Stormwater Section (TCEQ-0602)**

  Attachment A - Spill Response Actions
  Attachment B - Potential Sources of Contamination
  Attachment C - Sequence of Major Activities
  Attachment D - Temporary Best Management Practices and Measures
  Attachment E - Request to Temporarily Seal a Feature, if sealing a feature
  Attachment F - Structural Practices
  Attachment G - Drainage Area Map
  Attachment H - Temporary Sediment Pond(s) Plans and Calculations
  Attachment I - Inspection and Maintenance for BMPs
  Attachment J - Schedule of Interim and Permanent Soil Stabilization Practices

- **Copy of Notice of Intent (NOI)**
- **Agent Authorization Form (TCEQ-0599), if application submitted by agent**

- **Application Fee Form (TCEQ-0574)**
- **Check Payable to the "Texas Commission on Environmental Quality"**
- **Core Data Form (TCEQ-10400)**

Texas Commission on Environmental Quality

Edwards Aquifer Application Cover Page

Our Review of Your Application

The Edwards Aquifer Program staff conducts an administrative and technical review of all applications. The turnaround time for administrative review can be up to 30 days as outlined in 30 TAC 213.4(e). Generally administrative completeness is determined during the intake meeting or within a few days of receipt. The turnaround time for technical review of an administratively complete Edwards Aquifer application is 90 days as outlined in 30 TAC 213.4(e). Please know that the review and approval time is directly impacted by the quality and completeness of the initial application that is received. In order to conduct a timely review, it is imperative that the information provided in an Edwards Aquifer application include final plans, be accurate, complete, and in compliance with 30 TAC 213.

Administrative Review

1. Edwards Aquifer applications must be deemed administratively complete before a technical review can begin. To be considered administratively complete, the application must contain completed forms and attachments, provide the requested information, and meet all the site plan requirements. The submitted application and plan sheets should be final plans. Please submit one full-size set of plan sheets with the original application, and half-size sets with the additional copies.

   To ensure that all applicable documents are included in the application, the program has developed tools to guide you and web pages to provide all forms, checklists, and guidance. Please visit the below website for assistance: http://www.tceq.texas.gov/field/eapp.

2. This Edwards Aquifer Application Cover Page form (certified by the applicant or agent) must be included in the application and brought to the administrative review meeting.

3. Administrative reviews are scheduled with program staff who will conduct the review. Applicants or their authorized agent should call the appropriate regional office, according to the county in which the project is located, to schedule a review. The average meeting time is one hour.

4. In the meeting, the application is examined for administrative completeness. Deficiencies will be noted by staff and emailed or faxed to the applicant and authorized agent at the end of the meeting, or shortly after. Administrative deficiencies will cause the application to be deemed incomplete and returned.

   An appointment should be made to resubmit the application. The application is re-examined to ensure all deficiencies are resolved. The application will only be deemed administratively complete when all administrative deficiencies are addressed.

5. If an application is received by mail, courier service, or otherwise submitted without a review meeting, the administrative review will be conducted within 30 days. The applicant and agent will be contacted with the results of the administrative review. If the application is found to be administratively incomplete, it can be retrieved from the regional office or returned by regular mail. If returned by mail, the regional office may require arrangements for return shipping.

6. If the geologic assessment was completed before October 1, 2004 and the site contains "possibly sensitive" features, the assessment must be updated in accordance with the *Instructions to Geologists* (TCEQ-0585 Instructions).

Technical Review

1. When an application is deemed administratively complete, the technical review period begins. The regional office will distribute copies of the application to the identified affected city, county, and groundwater conservation district whose jurisdiction includes the subject site. These entities and the public have 30 days to provide comments on the application to the regional office. All comments received are reviewed by TCEQ.

2. A site assessment is usually conducted as part of the technical review, to evaluate the geologic assessment and observe existing site conditions. The site must be accessible to our staff. The site boundaries should be

clearly marked, features identified in the geologic assessment should be flagged, roadways marked and the alignment of the Sewage Collection System and manholes should be staked at the time the application is submitted. If the site is not marked the application may be returned.

3. We evaluate the application for technical completeness and contact the applicant and agent via Notice of Deficiency (NOD) to request additional information and identify technical deficiencies. There are two deficiency response periods available to the applicant. There are 14 days to resolve deficiencies noted in the first NOD. If a second NOD is issued, there is an additional 14 days to resolve deficiencies. If the response to the second notice is not received, is incomplete or inadequate, or provides new information that is incomplete or inadequate, the application must be withdrawn or will be denied. Please note that because the technical review is underway, whether the application is withdrawn or denied **the application fee will be forfeited**.

4. The program has 90 calendar days to complete the technical review of the application. If the application is technically adequate, such that it complies with the Edwards Aquifer rules, and is protective of the Edwards Aquifer during and after construction, an approval letter will be issued. Construction or other regulated activity may not begin until an approval is issued.

Mid-Review Modifications

It is important to have final site plans prior to beginning the permitting process with TCEQ to avoid delays.

Occasionally, circumstances arise where you may have significant design and/or site plan changes after your Edwards Aquifer application has been deemed administratively complete by TCEQ. This is considered a "Mid-Review Modification". Mid-Review Modifications may require redistribution of an application that includes the proposed modifications for public comment.

If you are proposing a Mid-Review Modification, two options are available:

- If the technical review has begun your application can be denied/withdrawn, your fees will be forfeited, and the plan will have to be resubmitted.
- TCEQ can continue the technical review of the application as it was submitted, and a modification application can be submitted at a later time.

If the application is denied/withdrawn, the resubmitted application will be subject to the administrative and technical review processes and will be treated as a new application. The application will be redistributed to the affected jurisdictions.

Please contact the regional office if you have questions. If your project is located in Williamson, Travis, or Hays County, contact TCEQ's Austin Regional Office at 512-339-2929. If your project is in Comal, Bexar, Medina, Uvalde, or Kinney County, contact TCEQ's San Antonio Regional Office at 210-490-3096

Please fill out all required fields below and submit with your application.

1. Regulated Entity Name: Lavish Salon and Boutique						**2. Regulated Entity No.:**			
3. Customer Name: S5 Properties, LLC.						**4. Customer No.:**			
5. Project Type: **(Please circle/check one)**	New		Modification			Extension		Exception	
6. Plan Type: **(Please circle/check one)**	WPAP	CZP	SCS	UST	AST	EXP	EXT	Technical Clarification	Optional Enhanced Measures
7. Land Use: **(Please circle/check one)**	Residential		Non-residential				**8. Site (acres):**		1.24
9. Application Fee:	$4,000		**10. Permanent BMP(s):**					Stormtrooper	
11. SCS (Linear Ft.):	0		**12. AST/UST (No. Tanks):**					0	
13. County:	Williamson		**14. Watershed:**					Brushy Creek	

Application Distribution

Instructions: Use the table below to determine the number of applications required. One original and one copy of the application, plus additional copies (as needed) for each affected incorporated city, county, and groundwater conservation district are required. Linear projects or large projects, which cross into multiple jurisdictions, can require additional copies. Refer to the "Texas Groundwater Conservation Districts within the EAPP Boundaries" map found at:

http://www.tceq.texas.gov/assets/public/compliance/field_ops/eapp/EAPP%20GWCD%20map.pdf

For more detailed boundaries, please contact the conservation district directly.

Austin Region			
County:	**Hays**	**Travis**	**Williamson**
Original (1 req.)	__	__	_x_
Region (1 req.)	__	__	_x_
County(ies)	__	__	_x_
Groundwater Conservation District(s)	__Edwards Aquifer Authority __Barton Springs/ Edwards Aquifer __Hays Trinity __Plum Creek	__Barton Springs/ Edwards Aquifer	NA
City(ies) Jurisdiction	__Austin __Buda __Dripping Springs __Kyle __Mountain City __San Marcos __Wimberley __Woodcreek	__Austin __Bee Cave __Pflugerville __Rollingwood __Round Rock __Sunset Valley __West Lake Hills	__Austin _x_Cedar Park __Florence __Georgetown __Jerrell __Leander __Liberty Hill __Pflugerville __Round Rock

San Antonio Region					
County:	**Bexar**	**Comal**	**Kinney**	**Medina**	**Uvalde**
Original (1 req.)	__	__	__	__	__
Region (1 req.)	__	__	__	__	__
County(ies)	__	__	__	__	__
Groundwater Conservation District(s)	__ Edwards Aquifer Authority __Trinity-Glen Rose	__Edwards Aquifer Authority	__Kinney	__EAA __Medina	__EAA __Uvalde
City(ies) Jurisdiction	__Castle Hills __Fair Oaks Ranch __Helotes __Hill Country Village __Hollywood Park __San Antonio (SAWS) __Shavano Park	__Bulverde __Fair Oaks Ranch __Garden Ridge __New Braunfels __Schertz	NA	__San Antonio ETJ (SAWS)	NA

I certify that to the best of my knowledge, that the application is complete and accurate. This application is hereby submitted to TCEQ for administrative review and technical review. Jennifer Henderson, P.E.	
Print Name of Customer/Authorized Agent	10/1/2020
Signature of Customer/Authorized Agent	Date

FOR TCEQ INTERNAL USE ONLY			
Date(s)Reviewed:		Date Administratively Complete:	
Received From:		Correct Number of Copies:	
Received By:		Distribution Date:	
EAPP File Number:		Complex:	
Admin. Review(s) (No.):		No. AR Rounds:	
Delinquent Fees (Y/N):		Review Time Spent:	
Lat./Long. Verified:		SOS Customer Verification:	
Agent Authorization Complete/Notarized (Y/N):		Fee Check:	Payable to TCEQ (Y/N):
Core Data Form Complete (Y/N):			Signed (Y/N):
Core Data Form Incomplete Nos.:			Less than 90 days old (Y/N):

Contributing Zone Plan Application

Texas Commission on Environmental Quality

for Regulated Activities on the Contributing Zone to the Edwards Aquifer and Relating to 30 TAC §213.24(1), Effective June 1, 1999

To ensure that the application is administratively complete, confirm that all fields in the form are complete, verify that all requested information is provided, consistently reference the same site and contact person in all forms in the application, and ensure forms are signed by the appropriate party.

Note: Including all the information requested in the form and attachments contributes to more streamlined technical reviews.

Signature

To the best of my knowledge, the responses to this form accurately reflect all information requested concerning the proposed regulated activities and methods to protect the Edwards Aquifer. This **Contributing Zone Plan Application** is hereby submitted for TCEQ review and Executive Director approval. The application was prepared by:

Print Name of Customer/Agent: Jennifer Henderson, P.E.

Date: 09/24/20

Signature of Customer/Agent:

_____

Regulated Entity Name: Lavish Salon and Boutique

Project Information

1. County: Williamson
2. Stream Basin: Brushy Creek
3. Groundwater Conservation District (if applicable): N/A
4. Customer (Applicant):

   Contact Person: Wendy Schneider
   Entity: S5 Properties, LLC.
   Mailing Address: 1106 Lynsenko Dr.
   City, State: Cedar Park, TX Zip: 78613
   Telephone: 512.810.0359 Fax: N/A
   Email Address: wendy@stbfirm.com

5. Agent/Representative (If any):

Contact Person: Jennifer Henderson, P.E.
Entity: M&S Engineering
Mailing Address: 102 W Morrow Ste 102
City, State: Georgetown, TX Zip: 78626
Telephone: 512.350.6228 Fax: N/A
Email Address: jhenderson@msengr.com

6. Project Location:

☒ The project site is located inside the city limits of Cedar Park.
☐ The project site is located outside the city limits but inside the ETJ (extra-territorial jurisdiction) of _____.
☐ The project site is not located within any city's limits or ETJ.

7. ☒ The location of the project site is described below. Sufficient detail and clarity has been provided so that the TCEQ's Regional staff can easily locate the project and site boundaries for a field investigation.

901 N. Vista Ridge Blvd.

8. ☒ **Attachment A - Road Map**. A road map showing directions to and the location of the project site is attached. The map clearly shows the boundary of the project site.

9. ☒ **Attachment B - USGS Quadrangle Map**. A copy of the official 7 ½ minute USGS Quadrangle Map (Scale: 1" = 2000') is attached. The map(s) clearly show:

☒ Project site boundaries.
☒ USGS Quadrangle Name(s).

10. ☒ **Attachment C - Project Narrative**. A detailed narrative description of the proposed project is attached. The project description is consistent throughout the application and contains, at a minimum, the following details:

☒ Area of the site
☒ Offsite areas
☒ Impervious cover
☒ Permanent BMP(s)
☒ Proposed site use
☒ Site history
☒ Previous development
☒ Area(s) to be demolished

11. Existing project site conditions are noted below:

☐ Existing commercial site
☐ Existing industrial site
☐ Existing residential site

☒ Existing paved and/or unpaved roads
☐ Undeveloped (Cleared)
☒ Undeveloped (Undisturbed/Not cleared)
☐ Other: _____

12. The type of project is:

☐ Residential: # of Lots: _____
☐ Residential: # of Living Unit Equivalents: _____
☒ Commercial
☐ Industrial
☐ Other: _____

13. Total project area (size of site): 1.24 Acres

    Total disturbed area: 1.24 Acres

14. Estimated projected population: _____

15. The amount and type of impervious cover expected after construction is complete is shown below:

Table 1 - Impervious Cover

Impervious Cover of Proposed Project	***Sq. Ft.***	***Sq. Ft./Acre***	***Acres***
Structures/Rooftops	5,326.49	÷ 43,560 =	0.122
Parking	27,875.27	÷ 43,560 =	0.640
Other paved surfaces	1,624.34	÷ 43,560 =	0.037
Total Impervious Cover	34826.1	÷ 43,560 =	0.710

Total Impervious Cover 0.710 **÷ Total Acreage** 1.24 **X 100 =** 57.26**% Impervious Cover**

16. ☒ **Attachment D - Factors Affecting Surface Water Quality**. A detailed description of all factors that could affect surface water quality is attached. If applicable, this includes the location and description of any discharge associated with industrial activity other than construction.

17. ☒ Only inert materials as defined by 30 TAC 330.2 will be used as fill material.

For Road Projects Only

Complete questions 18 - 23 if this application is exclusively for a road project.

☒ N/A

18. Type of project:

- ☐ TXDOT road project.
- ☐ County road or roads built to county specifications.
- ☐ City thoroughfare or roads to be dedicated to a municipality.
- ☐ Street or road providing access to private driveways.

19. Type of pavement or road surface to be used:

- ☐ Concrete
- ☐ Asphaltic concrete pavement
- ☐ Other: _____

20. Right of Way (R.O.W.):

Length of R.O.W.: _____ feet.
Width of R.O.W.: _____ feet.
L x W = _____Ft^2 ÷ 43,560 Ft^2/Acre = _____ acres.

21. Pavement Area:

Length of pavement area: _____ feet.
Width of pavement area: _____ feet.
L x W = _____Ft^2 ÷ 43,560 Ft^2/Acre = _____ acres.
Pavement area _____ acres ÷ R.O.W. area _____ acres x 100 = _____% impervious cover.

22. ☐ A rest stop will be included in this project.

☐ A rest stop will not be included in this project.

23. ☐ Maintenance and repair of existing roadways that do not require approval from the TCEQ Executive Director. Modifications to existing roadways such as widening roads/adding shoulders totaling more than one-half (1/2) the width of one (1) existing lane require prior approval from the TCEQ.

Stormwater to be generated by the Proposed Project

24. ☒ **Attachment E - Volume and Character of Stormwater**. A detailed description of the volume (quantity) and character (quality) of the stormwater runoff which is expected to occur from the proposed project is attached. The estimates of stormwater runoff quality and quantity are based on area and type of impervious cover. Include the runoff coefficient of the site for both pre-construction and post-construction conditions.

Wastewater to be generated by the Proposed Project

25. ☒ Wastewater is to be discharged in the contributing zone. Requirements under 30 TAC §213.6(c) relating to Wastewater Treatment and Disposal Systems have been satisfied.

☐ N/A

26. Wastewater will be disposed of by:

☐ On-Site Sewage Facility (OSSF/Septic Tank):

☐ **Attachment F - Suitability Letter from Authorized Agent**. An on-site sewage facility will be used to treat and dispose of the wastewater from this site. The appropriate licensing authority's (authorized agent) written approval is attached. It states that the land is suitable for the use of private sewage facilities and will meet or exceed the requirements for on-site sewage facilities as specified under 30 TAC Chapter 285 relating to On-site Sewage Facilities.

☐ Each lot in this project/development is at least one (1) acre (43,560 square feet) in size. The system will be designed by a licensed professional engineer or registered sanitarian and installed by a licensed installer in compliance with 30 TAC Chapter 285.

☒ Sewage Collection System (Sewer Lines):
The sewage collection system will convey the wastewater to the Brushy Creek Regional Wastewater (name) Treatment Plant. The treatment facility is:

☒ Existing.
☐ Proposed.

☐ N/A

Permanent Aboveground Storage Tanks(ASTs) ≥ 500 Gallons

Complete questions 27 - 33 if this project includes the installation of AST(s) with volume(s) greater than or equal to 500 gallons.

☒N/A

27. Tanks and substance stored:

Table 2 - Tanks and Substance Storage

AST Number	*Size (Gallons)*	*Substance to be Stored*	*Tank Material*
1			
2			
3			
4			
5			

Total x 1.5 = _____ Gallons

28. ☐ The AST will be placed within a containment structure that is sized to capture one and one-half (1 1/2) times the storage capacity of the system. For facilities with more than

one tank system, the containment structure is sized to capture one and one-half (1 1/2) times the cumulative storage capacity of all systems.

☐ **Attachment G - Alternative Secondary Containment Methods**. Alternative methods for providing secondary containment are proposed. Specifications showing equivalent protection for the Edwards Aquifer are attached.

29. Inside dimensions and capacity of containment structure(s):

Table 3 - Secondary Containment

Length (L)(Ft.)	*Width(W)(Ft.)*	*Height (H)(Ft.)*	*L x W x H = (Ft3)*	*Gallons*

Total: _____ Gallons

30. Piping:

☐ All piping, hoses, and dispensers will be located inside the containment structure.
☐ Some of the piping to dispensers or equipment will extend outside the containment structure.
☐ The piping will be aboveground
☐ The piping will be underground

31. ☐ The containment area must be constructed of and in a material impervious to the substance(s) being stored. The proposed containment structure will be constructed of: _____.

32. ☐ **Attachment H - AST Containment Structure Drawings**. A scaled drawing of the containment structure is attached that shows the following:

☐ Interior dimensions (length, width, depth and wall and floor thickness).
☐ Internal drainage to a point convenient for the collection of any spillage.
☐ Tanks clearly labeled
☐ Piping clearly labeled
☐ Dispenser clearly labeled

33. ☐ Any spills must be directed to a point convenient for collection and recovery. Spills from storage tank facilities must be removed from the controlled drainage area for disposal within 24 hours of the spill.

☐ In the event of a spill, any spillage will be removed from the containment structure within 24 hours of the spill and disposed of properly.

☐ In the event of a spill, any spillage will be drained from the containment structure through a drain and valve within 24 hours of the spill and disposed of properly. The drain and valve system are shown in detail on the scaled drawing.

Site Plan Requirements

Items 34 - 46 must be included on the Site Plan.

34. ☒ The Site Plan must have a minimum scale of 1" = 400'.

    Site Plan Scale: 1" = 30'.

35. 100-year floodplain boundaries:

    ☐ Some part(s) of the project site is located within the 100-year floodplain. The floodplain is shown and labeled.

    ☒ No part of the project site is located within the 100-year floodplain.

    The 100-year floodplain boundaries are based on the following specific (including date of material) sources(s): FEMA Firm Map: 48491C0470F Dated: December 20, 2019.

36. ☒ The layout of the development is shown with existing and finished contours at appropriate, but not greater than ten-foot contour intervals. Lots, recreation centers, buildings, roads, etc. are shown on the site plan.

    ☐ The layout of the development is shown with existing contours at appropriate, but not greater than ten-foot contour intervals. Finished topographic contours will not differ from the existing topographic configuration and are not shown. Lots, recreation centers, buildings, roads, etc. are shown on the site plan.

37. ☒ A drainage plan showing all paths of drainage from the site to surface streams.

38. ☒ The drainage patterns and approximate slopes anticipated after major grading activities.

39. ☒ Areas of soil disturbance and areas which will not be disturbed.

40. ☒ Locations of major structural and nonstructural controls. These are the temporary and permanent best management practices.

41. ☒ Locations where soil stabilization practices are expected to occur.

42. ☐ Surface waters (including wetlands).

    ☒ N/A

43. ☐ Locations where stormwater discharges to surface water.

    ☒ There will be no discharges to surface water.

44. ☐ Temporary aboveground storage tank facilities.

    ☒ Temporary aboveground storage tank facilities will not be located on this site.

45. ☐ Permanent aboveground storage tank facilities.

☒ Permanent aboveground storage tank facilities will not be located on this site.

46. ☒ Legal boundaries of the site are shown.

Permanent Best Management Practices (BMPs)

Practices and measures that will be used during and after construction is completed.

47. ☒ Permanent BMPs and measures must be implemented to control the discharge of pollution from regulated activities after the completion of construction.

☐ N/A

48. ☒ These practices and measures have been designed, and will be constructed, operated, and maintained to insure that 80% of the incremental increase in the annual mass loading of total suspended solids (TSS) from the site caused by the regulated activity is removed. These quantities have been calculated in accordance with technical guidance prepared or accepted by the executive director.

☒ The TCEQ Technical Guidance Manual (TGM) was used to design permanent BMPs and measures for this site.

☒ A technical guidance other than the TCEQ TGM was used to design permanent BMPs and measures for this site. The complete citation for the technical guidance that was used is: rg-348.

☐ N/A

49. ☒ Owners must insure that permanent BMPs and measures are constructed and function as designed. A Texas Licensed Professional Engineer must certify in writing that the permanent BMPs or measures were constructed as designed. The certification letter must be submitted to the appropriate regional office within 30 days of site completion.

☐ N/A

50. Where a site is used for low density single-family residential development and has 20 % or less impervious cover, other permanent BMPs are not required. This exemption from permanent BMPs must be recorded in the county deed records, with a notice that if the percent impervious cover increases above 20% or land use changes, the exemption for the whole site as described in the property boundaries required by 30 TAC §213.4(g) (relating to Application Processing and Approval), may no longer apply and the property owner must notify the appropriate regional office of these changes.

☐ The site will be used for low density single-family residential development and has 20% or less impervious cover.

☐ The site will be used for low density single-family residential development but has more than 20% impervious cover.

☒ The site will not be used for low density single-family residential development.

51. The executive director may waive the requirement for other permanent BMPs for multi-family residential developments, schools, or small business sites where 20% or less impervious cover is used at the site. This exemption from permanent BMPs must be recorded in the county deed records, with a notice that if the percent impervious cover increases above 20% or land use changes, the exemption for the whole site as described in the property boundaries required by 30 TAC §213.4(g) (relating to Application Processing and Approval), may no longer apply and the property owner must notify the appropriate regional office of these changes.

- ☐ **Attachment I - 20% or Less Impervious Cover Waiver**. The site will be used for multi-family residential developments, schools, or small business sites and has 20% or less impervious cover. A request to waive the requirements for other permanent BMPs and measures is attached.
- ☒ The site will be used for multi-family residential developments, schools, or small business sites but has more than 20% impervious cover.
- ☐ The site will not be used for multi-family residential developments, schools, or small business sites.

52. ☐ **Attachment J - BMPs for Upgradient Stormwater**.

- ☐ A description of the BMPs and measures that will be used to prevent pollution of surface water, groundwater, or stormwater that originates upgradient from the site and flows across the site is attached.
- ☒ No surface water, groundwater or stormwater originates upgradient from the site and flows across the site, and an explanation is attached.
- ☐ Permanent BMPs or measures are not required to prevent pollution of surface water, groundwater, or stormwater that originates upgradient from the site and flows across the site, and an explanation is attached.

53. ☒ **Attachment K - BMPs for On-site Stormwater**.

- ☒ A description of the BMPs and measures that will be used to prevent pollution of surface water or groundwater that originates on-site or flows off the site, including pollution caused by contaminated stormwater runoff from the site is attached.
- ☐ Permanent BMPs or measures are not required to prevent pollution of surface water or groundwater that originates on-site or flows off the site, including pollution caused by contaminated stormwater runoff, and an explanation is attached.

54. ☐ **Attachment L - BMPs for Surface Streams**. A description of the BMPs and measures that prevent pollutants from entering surface streams is attached.

- ☒ N/A

55. ☒ **Attachment M - Construction Plans**. Construction plans and design calculations for the proposed permanent BMPs and measures have been prepared by or under the direct supervision of a Texas Licensed Professional Engineer, and are signed, sealed, and dated. Construction plans for the proposed permanent BMPs and measures are

attached and include: Design calculations, TCEQ Construction Notes, all proposed structural plans and specifications, and appropriate details.

☐ N/A

56. ☒ **Attachment N - Inspection, Maintenance, Repair and Retrofit Plan**. A site and BMP specific plan for the inspection, maintenance, repair, and, if necessary, retrofit of the permanent BMPs and measures is attached. The plan fulfills all of the following:

    ☒ Prepared and certified by the engineer designing the permanent BMPs and measures
    ☒ Signed by the owner or responsible party
    ☒ Outlines specific procedures for documenting inspections, maintenance, repairs, and, if necessary, retrofit.
    ☒ Contains a discussion of record keeping procedures

    ☐ N/A

57. ☒ **Attachment O - Pilot-Scale Field Testing Plan**. Pilot studies for BMPs that are not recognized by the Executive Director require prior approval from the TCEQ. A plan for pilot-scale field testing is attached.

    ☐ N/A

58. ☒ **Attachment P - Measures for Minimizing Surface Stream Contamination**. A description of the measures that will be used to avoid or minimize surface stream contamination and changes in the way in which water enters a stream as a result of the construction and development is attached. The measures address increased stream flashing, the creation of stronger flows and in-stream velocities, and other in-stream effects caused by the regulated activity, which increase erosion that result in water quality degradation.

    ☐ N/A

Responsibility for Maintenance of Permanent BMPs and Measures after Construction is Complete.

59. ☒ The applicant is responsible for maintaining the permanent BMPs after construction until such time as the maintenance obligation is either assumed in writing by another entity having ownership or control of the property (such as without limitation, an owner's association, a new property owner or lessee, a district, or municipality) or the ownership of the property is transferred to the entity. Such entity shall then be responsible for maintenance until another entity assumes such obligations in writing or ownership is transferred.

60. ☒ A copy of the transfer of responsibility must be filed with the executive director at the appropriate regional office within 30 days of the transfer if the site is for use as a multiple single-family residential development, a multi-family residential development,

or a non-residential development such as commercial, industrial, institutional, schools, and other sites where regulated activities occur.

Administrative Information

61. ☒ Submit one (1) original and one (1) copy of the application, plus additional copies as needed for each affected incorporated city, groundwater conservation district, and county in which the project will be located. The TCEQ will distribute the additional copies to these jurisdictions.

62. ☒ Any modification of this Contributing Zone Plan may require TCEQ review and Executive Director approval prior to construction, and may require submission of a revised application, with appropriate fees.

63. ☒ The site description, controls, maintenance, and inspection requirements for the storm water pollution prevention plan (SWPPP) developed under the EPA NPDES general permits for stormwater discharges have been submitted to fulfill paragraphs 30 TAC §213.24(1-5) of the technical report. All requirements of 30 TAC §213.24(1-5) have been met by the SWPPP document.

☒ The Temporary Stormwater Section (TCEQ-0602) is included with the application.

Contributing Zone Plan Application

ATTACHMENT A

Road Map

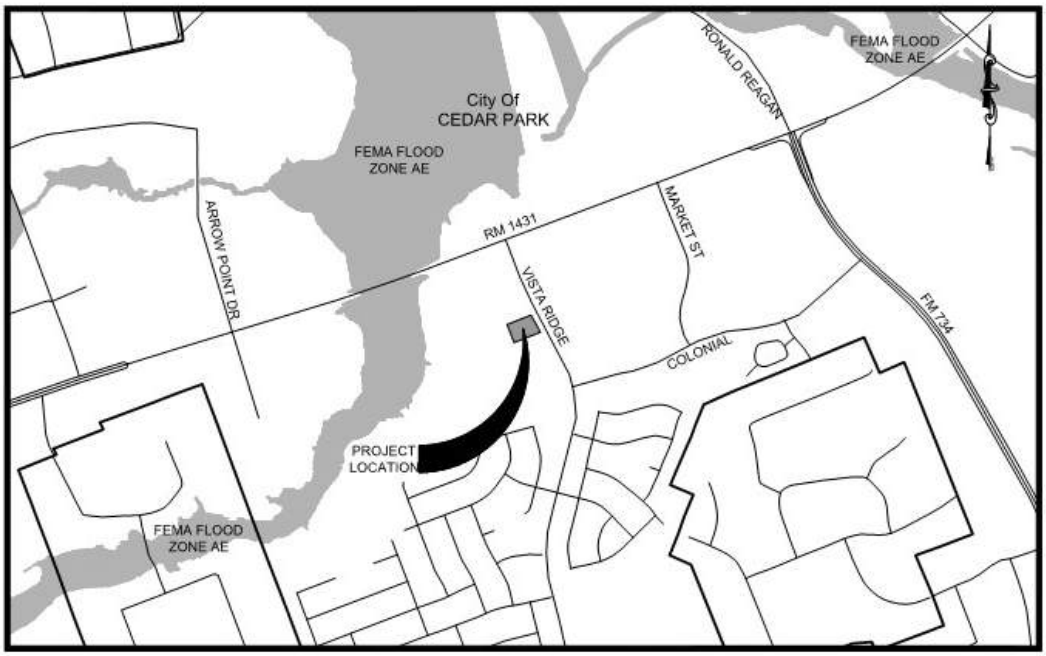

VICINITY MAP

Contributing Zone Plan Application

ATTACHMENT B

USGS Quadrangle Map

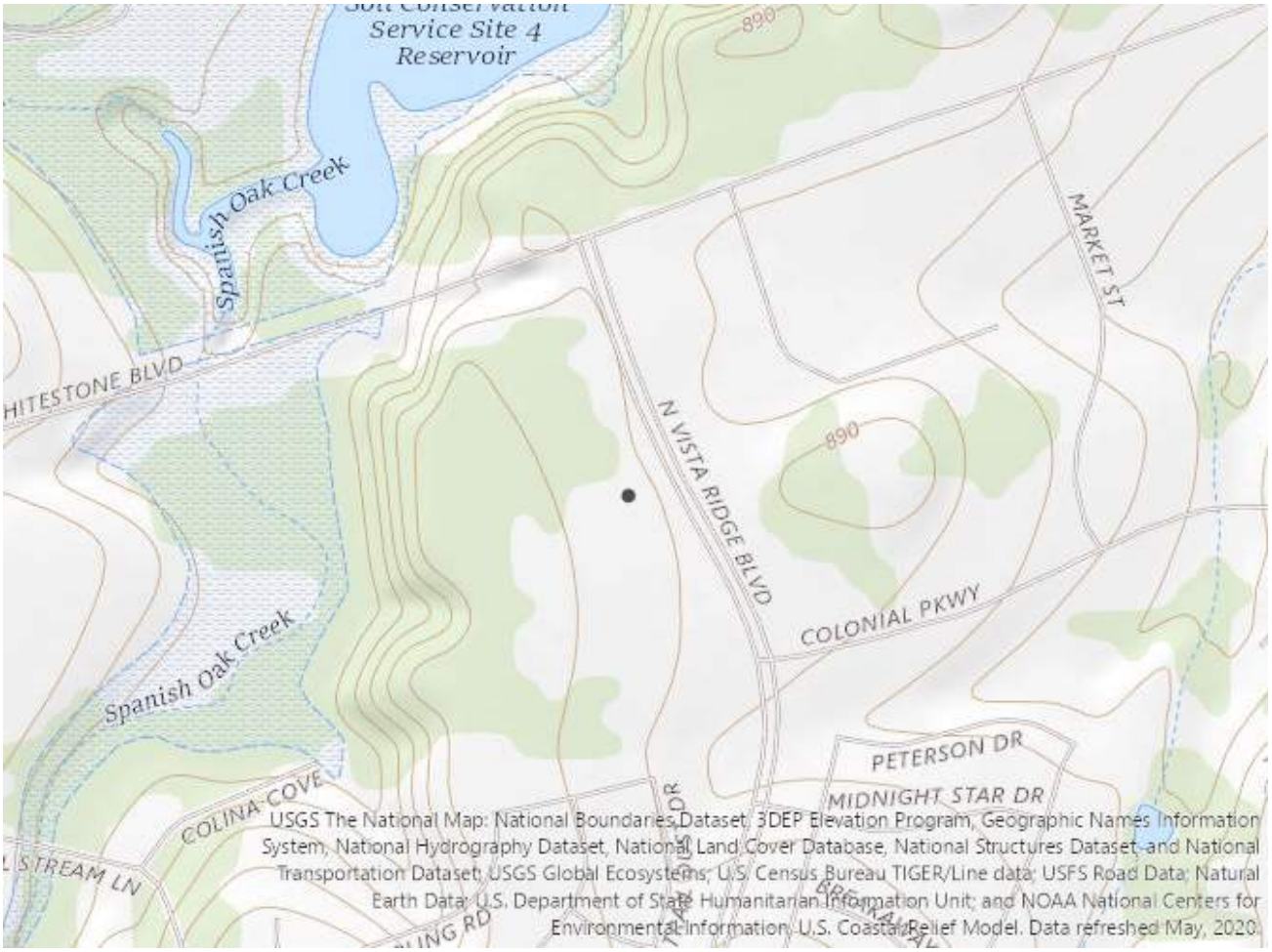

Contributing Zone Plan Application

ATTACHMENT C

Project Description

The Lavish Salon and Boutique site consists of a 1.24-acre tract of undeveloped land with a shared access drive. This commercial development will consist of a single story 5,326 S.F. building, relevant parking, utility infrastructure and fire protection facilities to serve the building. This site will not take on any offsite drainage. This site will have a single storm trooper unit as a water quality improvement. No on-site detention will be required.

ATTACHMENT D

Factors Affecting Surface Water Quality

The construction activities associated with the Lavish Salon and Boutique plan of development could result in additional Total Suspended Solids (TSS) loads during the construction of the site improvements. This potential increased locating will be mitigated with the use of silt fencing that is to be placed downgradient of the active construction areas and the placement of stabilized construction entrances at the entrance of the project, located on N Vista Ridge Blvd. Rock berms may be used in areas of concentrated flows during construction activities.

The overall impervious cover of the site will be approximately 56%, 0.70-acres of the 1.24-acre site. The runoff from the site will be treated by one subsurface stormtrooper unit, connected at the inlets. The permanent stormwater control calculations have been provided on the plan set and demonstrate the functionality of the proposed stormwater Best Management Practices. The proposed stormwater conveyance system will protect the water quality of the local receiving stream (1244A) that ultimately discharges to the Brazos River.

CONTRIBUTING ZONE PLAN APPLICATION

ATTACHMENT E

VOLUME AND CHARACTER OF STORMWATER

The 1.24-acre overall Lavish Salon and Boutique site is currently undeveloped with an access drive (0.16 acres of impervious cover). The post-construction condition will include approximately 0.70-acres of impervious cover, a total of approximately 56% of the total area. There is no offsite area draining to this tract. The proposed site includes conveyances and water quality improvements to capture and treat all of the runoff from the proposed site.

The stormwater in this area was studied using the modified rational method which is generally used for small areas (less than 20 acres) and is discussed in detail below.

Modified Rational Method

The Modified Rational Method provides a way to calculate the peak flow volume based on the size of the drainage area, intensity of rainfall and the "C values" (runoff coefficients). The assumption made with this method is that there is no "loss" of runoff associated with inflow or infiltration and the underlying assumption is that the peak intensity is maintained for a long enough duration to reach peak flow at the outlet of the catchment. This results in a trapezoidal hydrograph as shown below.

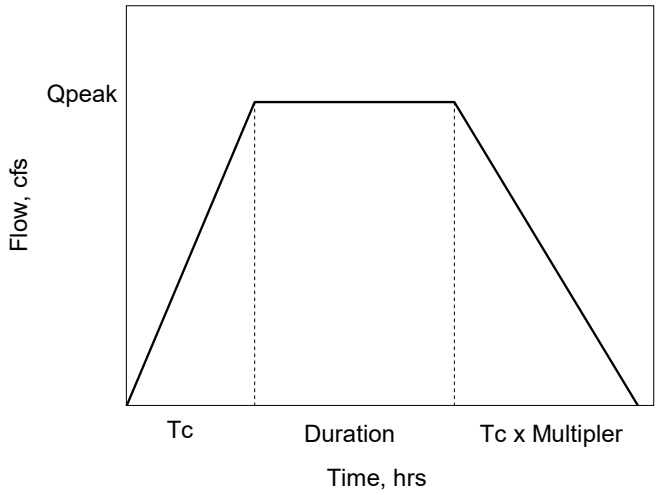

Q_{peak} (peak runoff) is determined from the rational method

$Q = C\ i\ A$

When using English units Q = flow in cfs, C is a dimensionless runoff coefficient, *i* is intensity in in/hr and A = area in acres. The time to reach the peak is based on the time of concentration in the drainage area, in this case they were all calculated to be 5 minutes using the TR-55 method and the Win-TR-55 computer program.

CONTRIBUTING ZONE PLAN APPLICATION

ATTACHMENT E (CONT'D)

VOLUME AND CHARACTER OF STORMWATER

Runoff Coefficient "C"

The proportion of the total rainfall that will reach the drainage system depends on the surface vegetation condition, soil type, imperviousness of the surface, land slope and ponding characteristics of the area. Impervious surfaces, such as asphalt pavements and roofs of buildings, will be subject to approximately 100 percent runoff (regardless of the slope). On-site inspections and aerial photographs may prove valuable in estimating the nature of the surfaces within the drainage area. The runoff coefficient "C" is the Rational Method variable which is least amenable to precise determination. A reasonable coefficient must be chosen to represent the integrated effects of infiltration, surface ponding, evaporation, flow routing and interception, all of which affect the time distribution and peak rate of runoff.
It is often desirable to develop a composite runoff coefficient based upon the percentages of different types of surfaces in the drainage area. This procedure is often applied to typical "sample blocks" as a guide to selection of reasonable values of the coefficient for an entire area. Suggested coefficients with respect to specific surface types are given in the table below:

RATIONAL METHOD RUNOFF COEFFICIENTS FOR COMPOSITE ANALYSIS					
Runoff Coefficient (C)					
Character of Surface	Return Period				
	2 Years	5 Years	10 Years	25 Years	100 Years
DEVELOPED					
Asphaltic	0.73	0.77	0.81	0.86	0.95
Concrete	0.75	0.8	0.83	0.88	0.97
Grass Areas (Lawns, Parks, etc.)					
Fair Condition**	0.25	0.28	0.3	0.34	0.41
Flat, 0-2%	0.25	0.28	0.3	0.34	0.41
Average, 2-7%	0.33	0.36	0.38	0.42	0.49
Steep, over 7%	0.37	0.4	0.42	0.46	0.53
UNDEVELOPED					
Pasture/Range					
Flat, 0-2%	0.25	0.28	0.3	0.34	0.41
Average, 2-7%	0.33	0.36	0.38	0.42	0.49
Steep, over 7%	0.37	0.4	0.42	0.46	0.53
Assumptions:					
Composite "C" value for developed conditions (C DEV) is : C DEV = IC 1 + (1-I)C 2					
	Where:				
	I = Impervious cover, percent				
	C 1 = "C" value for impervious cover				
	C 2 = "C" value for pervious area (grass, lawns, parks, etc.)				

ATTACHMENT E (CONT'D)

VOLUME AND CHARACTER OF STORMWATER

Intensity, *i*

The following equation mathematically represents the intensity-duration-frequency curve:

$$i = a/(t+b)^{c}$$

Where,

i = Average rainfall intensity, inches per hour
t = The time of concentration for the entire drainage area of interest
a, b and c = Coefficients for different storm frequencies.

The final best-fit coefficients of a, b, and c are listed below:

Austin Intensity-Duration-Frequency Curve Coefficients			
Return Period	Fitting parameters for IDF equation (2-8)		
Year	a	b	c
2	54.767	11.051	0.8116
10	70.82	10.396	0.7725
25	82.936	10.746	0.7634
100	118.3	13.185	0.7736
Source: Asquith, W.H., "Depth-Duration Frequency and Intensity-Duration Frequency for Austin and Travis County, Texas, 2001".			

CONTRIBUTING ZONE PLAN APPLICATION

ATTACHMENT E (CONT'D)

VOLUME AND CHARACTER OF STORMWATER

Time of Concentration "t"

The time of concentration is the time for surface runoff to flow from the most remote point in the watershed to the point of interest. This applies to the most remote point in time, not necessarily the most remote point in distance. Sound engineering judgment should be used to determine a flow path representative of the drainage area and in the subsequent calculation of the time of concentration. The time of concentration to any point in a storm drainage system is a combination of the sheet flow (overland), the shallow concentrated flow and the channel flow, which may include storm drains. The minimum time of concentration for any drainage area shall be 5 minutes. Additionally, the minimum slope used for calculation of sheet and shallow flow travel time components should be 0.005 feet per foot (0.5%). The preferred procedure for estimating time of concentration is the NRCS method as described in NRCS's Technical Release 55 (TR-55). The overall time of concentration is calculated as the sum of the sheet, shallow concentrated and channel flow travel times. Note that there may be multiple shallow concentrated and channel segments depending on the nature of the flow path.

$$T_C = T_{t(sheet)} + T_{t(shallow\ concentrated)} + T_{t(channel)}$$

$$T_{t\ (sheet)} = 0.42(nL)^{0.8}/((P_2)^{0.5} s^{0.4})$$

$$\text{Unpaved } T_{t(shallow\ concentrated)} = L/(60(16.1345)(s)^{0.5})$$

$$\text{Paved } T_{t(shallow\ concentrated)} = L/(60(20.3282)(s)^{0.5})$$

$$T_{t\ (channel)} = \Sigma(L_i/60\ V_i)$$

Where,

T_t = Sheet flow travel time in minutes

L = Length of the reach in ft.

n = Manning's n

P_2 = 2-year, 24-hour rainfall in inches

s = Slope of the ground in ft/ft

V = Q/A where, V = Average velocity, ft/s; Q = Design discharge, cfs; A = Cross-sectional area, ft2

L_i = The i-th channel segment length, ft

For this particular project, the following table is representative of the volume and character of stormwater.

CONTRIBUTING ZONE PLAN APPLICATION

ATTACHMENT E (CONT'D)

VOLUME AND CHARACTER OF STORMWATER

PRE-DEVELOPED DRAINAGE SUMMARY																
Area No.	**Acres**	**%IC**	**Tc**	**C2**	**I2**	**Q2**	**C10**	**I10**	**Q10**	**C25**	**I25**	**Q25**	**C100**	**I100**	**Q100**	**Remarks**
DA 1	4.97	3	29	0.362	0.510	**0.918**	0.423	0.770	**1.618**	0.454	0.950	**2.141**	0.524	1.260	**3.283**	CONTAINS SITE
DA 2	2.51	0	27	0.350	0.510	**0.448**	0.410	0.770	**0.792**	0.440	0.950	**1.048**	0.510	1.260	**1.611**	OFF-SITE
DA 3	2.45	0	5	0.350	0.510	**0.438**	0.410	0.770	**0.774**	0.440	0.950	**1.025**	0.510	1.260	**1.576**	OFF-SITE
DA 4	5.22	0	26	0.350	0.510	**0.932**	0.410	0.770	**1.649**	0.440	0.950	**2.183**	0.510	1.260	**3.356**	OFF-SITE
Total	**15.15**	**1.06**				**2.74**			**4.83**			**6.40**			**9.83**	

POST-DEVELOPED DRAINAGE SUMMARY																
Area No.	**Acres**	**%IC**	**Tc**	**C2**	**I2**	**Q2**	**C10**	**I10**	**Q10**	**C25**	**I25**	**Q25**	**C100**	**I100**	**Q100**	**Remarks**
DA 1a	3.63	80	26	0.600	0.510	**1.111**	0.664	0.770	**1.857**	0.704	0.950	**2.429**	0.776	1.260	**3.551**	OFF-SITE
DA 1b	0.17	59	5	0.587	0.510	**0.050**	0.659	0.770	**0.085**	0.701	0.950	**0.112**	0.783	1.260	**0.166**	CURB INLET
DA 1c	0.17	74	5	0.645	0.510	**0.055**	0.720	0.770	**0.093**	0.765	0.950	**0.122**	0.850	1.260	**0.179**	CURB INLET
DA 1d	0.71	76	5	0.655	0.510	**0.239**	0.731	0.770	**0.402**	0.776	0.950	**0.527**	0.861	1.260	**0.776**	GRATE INLET
DA 1e	0.23	13	5	0.403	0.510	**0.047**	0.466	0.770	**0.082**	0.498	0.950	**0.108**	0.571	1.260	**0.164**	GRATE INLET
DA 1f	0.13	2	5	0.357	0.510	**0.023**	0.417	0.770	**0.041**	0.448	0.950	**0.054**	0.518	1.260	**0.084**	OFF-SITE
Total	**5.04**	**73.58**				**1.53**			**2.56**			**3.35**			**4.92**	

The following tables represent the sizing for the stormtrooper systems which are to remove approximately 78% TSS.

FOR ADDITIONAL CALCULATIONS AND INFORMATION PLEASE REFER TO:

"WATER QUALITY CONTIBUTING ZONE PLAN"

AND

"WATER QUALITY CALCULATIONS PLAN"

FOR SHEET SET 8120ADAYA.005-LAVISH SALON AND BOUTIQUE

ATTACHMENT J

BMPS for Upgradient Stormwater

No surface water, ground water or stormwater originates upgradient from the site and flows across the site.

ATTACHMENT K

BMPs for On-site Stormwater

A single stormtrooper system will be used to prevent pollution of surface water that originates on-site and flows off site. No groundwater originates on-site. Please refer to Attachment E, volume and character of stormwater, for a full understanding of volume anticipated.

ATTACHMENT M

Construction Plans

Construction plans have been bound separately and submitted as an attachment with this application.

SITE DEVELOPMENT PLANS FOR

LAVISH SALON AND BOUTIQUE

901 N. VISTA RIDGE BLVD.

CEDAR PARK, TEXAS

"ALL RESPONSIBILITY FOR ACCURACY OF THESE PLANS REMAIN WITH THE ENGINEER WHO PREPARED THEM. IN REVIEWING THESE PLANS, THE CITY OF CEDAR PARK MUST RELY UPON THE ADEQUACY OF THE WORK OF THE DESIGN ENGINEER"

REVIEWED FOR CODE COMPLIANCE
SIGNATURE REQUIRED FROM ALL DEPARTMENTS

PLANNING _____ DATE _____

ENGINEERING SERVICES _____ DATE _____

INDUSTRIAL PRETREATMENT _____ DATE _____

FIRE MARSHAL _____ DATE _____

URBAN FORESTER _____ DATE _____

ADDRESSING _____ DATE _____

SITE DEVELOPMENT PERMIT NUMBER _____

STATE OF TEXAS

COUNTY OF WILLIAMSON

I, JENNIFER L. HENDERSON, DO HEREBY CERTIFY THAT THE PUBLIC WORKS AND DRAINAGE IMPROVEMENTS DESCRIBED HEREIN HAVE BEEN DESIGNED IN COMPLIANCE WITH THE SUBDIVISION AND BUILDING REGULATION ORDINANCES AND STORMWATER DRAINAGE POLICY ADOPTED BY THE CITY OF CEDAR PARK, TEXAS.

STATE OF TEXAS
JENNIFER L. HENDERSON
116883
LICENSED
PROFESSIONAL ENGINEER
09/18/2020

SHEET LIST

NUMBER	TITLE
01	COVER SHEET
02	GENERAL NOTES
03	TCEQ CONTRIBUTING ZONE GENERAL CONSTRUCTION NOTES
04	CONSTRUCTION NOTES
05	LEGEND AND ABBREVIATIONS
06	PLAT
07	PLAT
08	SITE PLAN
09	FIRE PROTECTION PLAN
10	EXISTING CONDITIONS
11	EROSION AND SEDIMENTATION CONTROL PLAN
12	DEMOLITION PLAN
13	WATER PLAN
14	WASTEWATER PLAN AND PROFILE
15	STORM SEWER PLAN
16	STORM SEWER PROFILE
17	PRE-DEVELOPMENT DRAINAGE AREA MAP
18	POST-DEVELOPMENT DRAINAGE AREA MAP
19	WATER QUALITY CONTRIBUTING ZONE PLAN
20	WATER QUALITY CALCULATIONS
21	DIMENSION CONTROL PLAN
22	PAVING AND STRIPING PLAN
23	GRADING PLAN
24	EROSION AND SEDIMENTATION CONTROL DETAILS
25	WATER DETAILS
26	WATER DETAILS
27	WATER DETAILS
28	WASTEWATER DETAILS
29	STORM DETAILS
30	STORMTROOPER DETAIL
31	PAVING DETAILS
32	PAVING DETAILS
33	PAVING DETAILS
34	PAVING DETAILS
35	DUMPSTER DETAILS
36	EXTERIOR ELEVATIONS
37	EXTERIOR ELEVATIONS
38	LANDSCAPE PLAN
39	LANDSCAPE DETAILS AND SPECIFICATIONS
40	PHOTOMETRIC PLAN

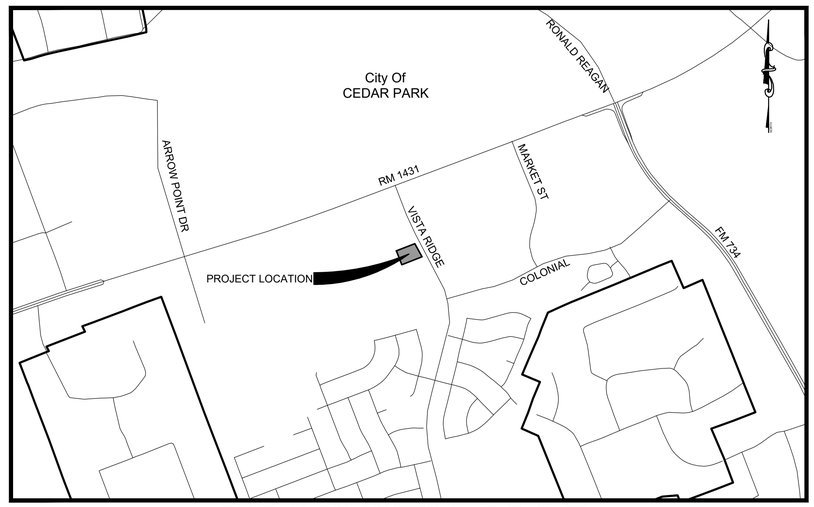

VICINITY MAP

SCALE: 1"=1,000'

NOTES:

1. A SITE DEVELOPMENT PERMIT SHALL EXPIRE TWO (2) YEARS FROM THE DATE SUCH PERMIT WAS APPROVED IF NO PROGRESS HAS BEEN MADE TOWARDS COMPLETION OF THE PROJECT, PURSUANT TO SECTION 245.005 OF THE TEXAS LOCAL GOVERNMENT CODE, AS AMENDED. (SEC. 14.03.009 (a)).
2. ANY PROJECT, AS DEFINED UNDER CHAPTER 245 OF THE TEXAS LOCAL GOVERNMENT CODE, AS AMENDED, SHALL EXPIRE ON THE FIFTH ANNIVERSARY OF THE DATE THE FIRST PERMIT APPLICATION WAS FILED FOR THE PROJECT, PURSUANT TO SECTION 245.005 OF THE TEXAS LOCAL GOVERNMENT CODE, AS AMENDED. (SEC. 14.03.009 (b)).
3. THIS PROJECT IS WITHIN THE SILVERADO TRAFFIC IMPACT BOUNDARY AND WILL BE REQUIRED TO PAY AN IMPACT FEE OF $126.36 PER PM PEAK HOUR TRIP FOR WHICH THE PROJECT WILL GENERATE.

SITE INFORMATION

OWNER:	WENDY SCHNEIDER S5 PROPERTIES, LLC. 1106 LYSENKO DRIVE CEDAR PARK, TEXAS 78613 PHONE 512.810.0359 EMAIL WENDY@STBFIRM.COM
ACREAGE:	1.24 ACRES
TOTAL IMPERVIOUS COVER:	0.71 ACRES
LEGAL DESCRIPTION:	LOT 4, BLOCK A, THE SHOPS AT VISTA RIDGE AS RECORDED IN DOCUMENT NUMBER 2009045842
ADDRESS:	901 N. VISTA RIDGE BLVD. CEDAR PARK, TEXAS
LAND USE SUMMARY:	OFFICE/PERSONAL SERVICE
ZONING:	GENERAL BUSINESS (GB)
PERSON PREPARING PLANS/ENGINEER:	JENNIFER L. HENDERSON, P.E. M&S ENGINEERING, LLC FIRM # F-1394 102 W. MORROW ST, SUITE 101 GEORGETOWN, TEXAS 78626 PHONE 512.942.5308 EMAIL JHENDERSON@MSENGR.COM
FEMA FIRM DATA:	FEMA ZONE 'X' 48491C0470F, DATED 12/20/2019
EDWARDS AQUIFER:	CONTRIBUTING ZONE
TDLR REGISTRATION NO.:	

UTILITY PROVIDERS

WATER	CITY OF CEDAR PARK 512.401.5300
WASTEWATER	CITY OF CEDAR PARK 512.401.5300
GAS	ATMOS ENERGY 800.460.3030
ELECTRIC	PEDERNALES ELECTRIC (PEC) 812.331.8883

BENCHMARK INFORMATION

BENCHMARK #1:	NAIL SET ELEV=892.96
BENCHMARK #2:	NAIL SET ELEV=896.31
BENCHMARK #3:	NAIL SET ELEV=894.52
BENCHMARK #4:	NAIL SET ELEV=892.85
BENCHMARK #5:	NAIL SET ELEV=896.42

BEARING BASIS: NAD-83, TEXAS CENTRAL ZONE (4203) STATE PLANE SYSTEM. THIS DRAWING IS ON SURFACE COORDINATES BASED ON A COMBINED SURFACE ADJUSTMENT FACTOR OF 1.00012
VERTICAL DATUM: NAVD-88 (GEOID 2012A)

PROJECT DESCRIPTION

THIS PROJECT IS A 1.24 ACRE LOT CONTAINING ONE 5,326 S.F. BUILDING, RELEVANT PARKING, UTILITY INFRASTRUCTURE AND FIRE PROTECTION FACILITIES TO SERVE THE BUILDING.

PLAN SUBMITTALS

NO.	DATE	DESCRIPTION
1		
2		
3		
4		
5		
6		

REVISIONS

REVISION NUMBER	DESCRIPTION	APPROVED BY	DATE

M&S ENGINEERING
ELECTRICAL | CIVIL | STRUCTURAL | MEP
TXENG FIRM # F-1394 | TBPELS FIRM #10169800
WWW.MSENGR.COM | (830) 228-5446

MAIN OFFICE
P.O. BOX 970
SPRING BRANCH,
TEXAS 78070
PHONE # (830) 228-5446
FAX # (830) 885-2170

BRANCH OFFICE
102 W. MORROW ST.,
SUITE 101
GEORGETOWN,
TEXAS 78626

DATE DRAWN
09/18/20

SHEET
01 OF 40

Date: Sep 18, 2020, 12:21pm User ID: areilly
File: Y:\active projects\2020\81 georgetown general civil\8120adaya.005 - lavish salon and boutique\dwg\Sheets\8120ADAYA.005-COVER SHEET.dwg

CITY PROJECT NUMBER: _____

CONSTRUCTION NOTES FOR SUBDIVISIONS & SITE PLANS
CITY OF CEDAR PARK
REVISED JUNE 1, 2020

GENERAL NOTES:

1. GENERAL CONTRACTOR SHALL CALL FOR ALL UTILITY LOCATES PRIOR TO ANY CONSTRUCTION. WATER & WASTEWATER OWNED BY THE CITY OF CEDAR PARK CAN BE LOCATED BY CALLING TEXAS 811 AT 1-800-344-8377. ALLOW THREE BUSINESS DAYS FOR UTILITY LOCATES BY THE CITY OF CEDAR PARK.
2. ALL CONSTRUCTION SHALL BE IN ACCORDANCE WITH THE LATEST CITY OF AUSTIN STANDARD SPECIFICATIONS. CITY OF AUSTIN STANDARDS SHALL BE USED UNLESS OTHERWISE NOTED.
3. DESIGN PROCEDURES SHALL BE IN GENERAL COMPLIANCE WITH THE CITY OF AUSTIN DRAINAGE CRITERIA MANUAL. ALL VARIANCES TO THE MANUAL ARE LISTED BELOW: <ENTER HERE>
4. BENCHMARKS SHOULD BE TIED TO THE CITY OF CEDAR PARK BENCHMARKS AND BE CORRECTLY "GEOREFERENCED" TO STATE PLANE COORDINATES. A LIST OF THE CITY'S BENCHMARKS CAN BE FOUND AT: HTTP://WWW.CEDARPARKTEXAS.GOV/INDEX.ASPX?PAGE=793.
5. PRIOR TO ISSUANCE OF A CERTIFICATE OF OCCUPANCY FOR A SITE DEVELOPMENT PERMIT, THE RIGHT OF WAY BETWEEN THE PROPERTY LINE AND EDGE OF PAVEMENT / BACK OF CURB SHALL BE REVEGETATED ACCORDING TO COA SPECIFICATION 602S AND 606S. PRIOR TO CITY ACCEPTANCE OF SUBDIVISION IMPROVEMENTS ALL GRADED AND DISTURBED AREAS SHALL BE RE-VEGETATED IN ACCORDANCE WITH THE CITY OF AUSTIN SPECIFICATION ITEM #604 NATIVE SEEDING UNLESS NONNATIVE IS SPECIFICALLY APPROVED.
6. THE CONTRACTOR SHALL PROVIDE THE CITY OF CEDAR PARK COPIES OF ALL TEST RESULTS PRIOR TO ACCEPTANCE OF SUBDIVISION IMPROVEMENTS.
7. CITY, OWNER, ENGINEER, CONTRACTOR, REPRESENTATIVES OF ALL UTILITY COMPANIES, AND A REPRESENTATIVE FROM THE TESTING LAB SHALL ATTEND PRE-CONSTRUCTION CONFERENCE PRIOR TO START OF CONSTRUCTION. THE CONTRACTOR SHALL SCHEDULE THE MEETING WITH THE CITY OF CEDAR PARK ENGINEERING DEPARTMENT A MINIMUM OF 48 HOURS PRIOR TO THIS PRE-CONSTRUCTION MEETING (512-401-5000). FINAL CONSTRUCTION PLANS SHALL BE DELIVERED TO ENGINEERING A MINIMUM OF SEVEN BUSINESS DAYS PRIOR TO REQUESTING A PRE-CONSTRUCTION MEETING.
8. EXCESS SOIL SHALL BE REMOVED AT THE CONTRACTOR'S EXPENSE. NOTIFY THE CITY OF CEDAR PARK IF THE DISPOSAL SITE IS INSIDE THE CITY'S JURISDICTIONAL BOUNDARIES.
9. BURNING IS PROHIBITED.
10. ANY CHANGES OR REVISIONS TO THESE PLANS MUST FIRST BE SUBMITTED TO THE CITY BY THE DESIGN ENGINEER FOR REVIEW AND WRITTEN APPROVAL PRIOR TO CONSTRUCTION OF THE REVISION. ALL CHANGES AND REVISIONS MADE TO THE DESIGN OF UTILITIES OR IMPACTS UTILITIES SHALL USE REVISION CLOUDS TO HIGHLIGHT ALL REVISIONS OR CHANGES WITH EACH SUBMITTAL. REVISION TRIANGLES SHALL BE USED TO MARK REVISIONS. ALL CLOUDS AND TRIANGLE MARKERS FROM PREVIOUS REVISIONS MAY BE REMOVED. REVISION INFORMATION SHALL BE UPDATED IN THE APPROPRIATE AREAS OF THE TITLE BLOCK.
11. MINIMUM SETBACK REQUIREMENTS FOR EXISTING AND NEWLY PLANTED TREES FROM THE EDGE OF PAVEMENT TO CONFORM TO THE REQUIREMENTS AS SHOWN IN TABLE 6-1 OF THE CITY OF AUSTIN'S TRANSPORTATION CRITERIA MANUAL.
12. THE CONTRACTOR WILL REIMBURSE THE CITY FOR ALL COST INCURRED AS A RESULT OF ANY DAMAGE TO ANY CITY UTILITY OR ANY INFRASTRUCTURE WITHIN THE RIGHT-OF-WAY BY THE CONTRACTOR, REGARDLESS OF THESE PLANS.
13. AN ENGINEER'S CONCURRENCE LETTER AND ELECTRONIC 22"X34" RECORD DRAWINGS SHALL BE SUBMITTED TO THE ENGINEERING DEPARTMENT PRIOR TO THE ISSUANCE OF CERTIFICATE OF OCCUPANCY OR SUBDIVISION ACCEPTANCE. THE ENGINEER AND CONTRACTOR SHALL VERIFY THAT ALL FINAL REVISIONS AND CHANGES HAVE BEEN MADE TO RECORD DRAWINGS PRIOR TO CITY SUBMITTAL. RECORD CONSTRUCTION DRAWINGS, INCLUDING ROADWAY AND ALL UTILITIES, SHALL BE PROVIDED TO THE CITY IN AUTOCAD ". DWG" FILES AND ".PDF" FORMAT ON A CD OR DVD. LINE WEIGHTS, LINE TYPES AND TEXT SIZE SHALL BE SUCH THAT IF HALF-SIZE PRINTS (11"X 17") WERE PRODUCED, THE PLANS WOULD STILL BE LEGIBLE. ALL REQUIRED DIGITAL FILES SHALL CONTAIN A MINIMUM OF TWO (2) CONTROL POINTS REFERENCED TO THE STATE PLANE GRID COORDINATE SYSTEM – TEXAS CENTRAL ZONE (4203), IN US FEET AND SHALL INCLUDE ROTATION INFORMATION AND SCALE FACTOR REQUIRED TO REDUCE SURFACE COORDINATES TO GRID COORDINATES IN US FEET.
14. THE CITY OF CEDAR PARK HAS NOT REVIEWED THESE PLANS FOR COMPLIANCE WITH THE AMERICANS WITH DISABILITIES ACT. IT IS THE RESPONSIBILITY OF THE OWNER TO PROVIDE COMPLIANCE WITH ALL LEGISLATION RELATED TO ACCESSIBILITY WITHIN THE LIMITS OF CONSTRUCTION SHOWN IN THESE PLANS.
15. ALL RESPONSIBILITY FOR THE ADEQUACY OF THESE PLANS REMAINS WITH THE ENGINEER WHO PREPARED THEM. IN REVIEWING THESE PLANS, THE CITY OF CEDAR PARK MUST RELY ON THE ADEQUACY OF THE WORK OF THE DESIGN ENGINEER.
16. NO BLASTING IS ALLOWED ON THIS PROJECT.
17. A TRAFFIC CONTROL PLAN, IN ACCORDANCE WITH THE TEXAS MANUAL ON UNIFORM TRAFFIC CONTROL DEVICES, SHALL BE SUBMITTED TO THE CITY FOR REVIEW AND APPROVAL PRIOR TO ANY PARTIAL OR COMPLETE ROADWAY CLOSURES. TRAFFIC CONTROL PLANS SHALL BE SITE SPECIFIC AND SEAL BY A REGISTERED PROFESSIONAL ENGINEER.
18. THE CONTRACTOR SHALL KEEP THE SITE CLEAN AND MAINTAINED AT ALL TIMES, TO THE SATISFACTION OF THE CITY. THE SUBDIVISION WILL NOT BE ACCEPTED (OR CERTIFICATE OF OCCUPANCY ISSUED) UNTIL THE SITE HAS BEEN CLEANED TO THE SATISFACTION OF THE CITY.
19. SIGNS ARE NOT PERMITTED IN PUBLIC UTILITY EASEMENTS, SET BACKS OR DRAINAGE EASEMENTS.
20. IT SHALL BE THE RESPONSIBILITY OF THE CONTRACTOR TO INSPECT TEMPORARY EROSION CONTROLS ON A DAILY BASIS. ADJUST THE CONTROLS AND/OR REMOVE ANY SEDIMENT BUILDUP AS NECESSARY. A STOP WORK ORDER AND/OR FINE MAY BE IMPOSED IF THE EROSION CONTROLS ARE NOT MAINTAINED.
21. A FINAL CERTIFICATE OF OCCUPANCY WILL NOT BE ISSUED ON COMMERCIAL SITES UNTIL ALL DISTURBED AREAS HAVE BEEN RE-VEGETATED. SUBSTANTIAL GRASS COVER, AS DETERMINED BY ENGINEERING DEPARTMENT, MUST BE ACHIEVED PRIOR TO THE ISSUANCE OF A FINAL CERTIFICATE OF OCCUPANCY. ALL EROSION CONTROLS MUST REMAIN IN PLACE AND MAINTAINED UNTIL ALL DISTURBED AREAS HAVE BEEN RE-VEGETATED TO THE ACCEPTANCE OF THE CITY OF CEDAR PARK ENGINEERING DEPARTMENT. PRIOR TO ISSUANCE OF A CERTIFICATE OF OCCUPANCY FOR A SITE DEVELOPMENT PERMIT, THE RIGHT OF WAY BETWEEN THE PROPERTY LINE AND EDGE OF PAVEMENT / BACK OF CURB SHALL BE REVEGETATED ACCORDING TO COA SPECIFICATION 602S AND 606S.
22. CONTRACTOR WILL BE RESPONSIBLE FOR KEEPING ROADS AND DRIVES ADJACENT TO AND NEAR THE SITE FREE FROM SOIL, SEDIMENT AND DEBRIS. CONTRACTOR WILL NOT REMOVE SOIL, SEDIMENT OR DEBRIS FROM ANY AREA OR VEHICLE BY MEANS OF WATER, ONLY SHOVELING AND SWEEPING WILL BE ALLOWED. CONTRACTOR WILL BE RESPONSIBLE FOR DUST CONTROL FROM THE SITE. FAILURE TO COMPLY WITH THIS REQUIREMENT MAY RESULT IN A STOP WORK ORDER OR A FINE.
23. ALL WET UTILITIES SHALL BE INSTALLED AND ALL DENSITIES MUST HAVE PASSED INSPECTION(S) PRIOR TO THE INSTALLATION OF DRY UTILITIES.
24. A MINIMUM OF SEVEN DAYS OF CURE TIME IS REQUIRED FOR HMAC PRIOR TO THE INTRODUCTION OF VEHICULAR TRAFFIC TO ANY STREETS.
25. PRIOR TO PLAN APPROVAL, THE ENGINEER SHALL SUBMIT TO THE ENGINEERING DEPARTMENT DOCUMENTATION OF SUBDIVISION/SITE REGISTRATION WITH THE TEXAS DEPARTMENT OF LICENSING AND REGULATIONS (TDLR) AND PROVIDE DOCUMENTATION OF REVIEW AND COMPLIANCE OF THE SUBDIVISION/SITE CONSTRUCTION PLANS WITH TEXAS ARCHITECTURAL BARRIERS ACT (TABA).
26. PRIOR TO SUBDIVISION/SITE ACCEPTANCE, THE ENGINEER/DEVELOPER-OWNER SHALL SUBMIT TO THE ENGINEERING DEPARTMENT DOCUMENTATION THAT THE SUBDIVISION/SITE WAS INSPECTED BY TDLR OR A REGISTERED ACCESSIBILITY SPECIALIST (RAS) AND THE SUBDIVISION/SITE IS IN COMPLIANCE WITH THE REQUIREMENTS OF THE TABA.
27. ALL CONSTRUCTION AND CONSTRUCTION RELATED ACTIVITIES SHALL BE PERFORMED MONDAY THRU FRIDAY FROM 7:00 A.M. TO 6:00 P.M. HOWEVER, CONSTRUCTION ACTIVITIES WITHIN ONE HUNDRED FEET (100') OF A DWELLING OR DWELLING UNIT SHALL BE PERFORMED BETWEEN THE HOURS OF 8:00 A.M. AND 6:00 P.M. OTHERWISE ALL CONSTRUCTION AND CONSTRUCTION RELATED ACTIVITIES SHALL CONFORM TO CITY OF CEDAR PARK CODE OF ORDINANCES, SPECIFICALLY ARTICLE 8.08.
28. APPROVAL FOR CONSTRUCTION ACTIVITIES PERFORMED ON OWNER'S HOLIDAYS, AND/OR SATURDAYS, OUTSIDE OF MONDAY THROUGH FRIDAY 8 AM TO 5 PM, OR IN EXCESS OF 8 HOURS PER DAY SHALL BE OBTAINED IN WRITING 48 HOURS IN ADVANCE, AND INSPECTION FEES AT 1.5 TIMES THE HOURLY INSPECTION RATE SHALL BE BILLED DIRECTLY TO THE CONTRACTOR. THERE SHALL BE NO CONSTRUCTION OR CONSTRUCTION RELATED ACTIVITIES PERFORMED ON SUNDAY. THE CITY RESERVES THE RIGHT TO REQUIRE THE CONTRACTOR TO UNCOVER ALL WORK PERFORMED WITHOUT CITY INSPECTION.
29. ALL POLES TO BE APPROVED BY CITY AND PEC, NO CONDUIT SHALL BE INSTALLED DOWN LOT LINES / BETWEEN HOMES. ALL CONDUIT SHALL BE LOCATED IN THE PUBLIC ROW OR IN AN EASEMENT ADJACENT TO AND PARALLEL TO THE PUBLIC ROW.
30. DRY UTILITIES SHALL BE INSTALLED AFTER SUBGRADE IS CUT AND BEFORE FIRST COURSE BASE. NO TRENCHING OF COMPACTED BASE. IF NECESSARY DRY UTILITIES INSTALLED AFTER FIRST COURSE BASE SHALL BE BORED ACROSS THE FULL WIDTH OF THE ROW.
31. NO PONDING OF WATER SHALL BE ALLOWED TO COLLECT ON OR NEAR THE INTERSECTION OF PRIVATE DRIVEWAY(S) AND A PUBLIC STREET. RECONSTRUCTION OF THE DRIVEWAY APPROACH SHALL BE AT THE CONTRACTOR'S EXPENSE.
32. ALL DRIVEWAY APPROACHES SHALL HAVE A UNIFORM TWO PERCENT SLOPE WITHIN THE ROW UNLESS APPROVED IN WRITING BY THE ENGINEERING DEPARTMENT.
33. CONTRACTORS ON SITE SHALL HAVE AN APPROVED SET OF PLANS AT ALL TIMES. FAILURE TO HAVE AN APPROVED SET MAY RESULT IN A STOP WORK ORDER.
34. CONTRACTOR TO CLEAR FIVE FEET BEYOND ALL RIGHT OF WAY TO PREVENT FUTURE VEGETATIVE GROWTH INTO THE SIDEWALK AREAS.
35. THERE SHALL BE NO WATER OR WASTEWATER APPURTENANCES, INCLUDING BUT NOT LIMITED TO, VALVES, FITTINGS, METERS, CLEAN-OUTS, MANHOLES, OR VAULTS IN ANY DRIVEWAY, SIDEWALK, TRAFFIC OR PEDESTRIAN AREA.
36. SIDEWALKS SHALL NOT USE CURB INLETS AS A PARTIAL WALKING SURFACE. SIDEWALKS SHALL NOT USE TRAFFIC CONTROL BOXES, METER OR CHECK VALVE VAULTS, COMMUNICATION VAULTS, OR OTHER BURIED OR PARTIALLY BURIED INFRASTRUCTURE AS A VEHICULAR OR PEDESTRIAN SURFACE.

STREET NOTES:

1. NO TRENCHING OF COMPACTED BASE WILL BE ALLOWED. A PENALTY AND/OR FINE MAY BE IMPOSED TO THE GENERAL CONTRACTOR IF TRENCHING OF COMPACTED BASE OCCURS WITHOUT CITY APPROVAL, REGARDLESS OF WHO PERFORMED THE TRENCHING.
2. ALL SIDEWALKS SHALL COMPLY WITH THE AMERICANS WITH DISABILITIES ACT. THE CITY OF CEDAR PARK HAS NOT REVIEWED THESE PLANS FOR COMPLIANCE WITH THE AMERICANS WITH DISABILITIES ACT, OR ANY OTHER ACCESSIBILITY LEGISLATION, AND DOES NOT WARRANTY OR APPROVE THESE PLANS FOR ANY ACCESSIBILITY STANDARDS.
3. STREET BARRICADES SHALL BE INSTALLED ON ALL DEAD END STREETS AND AS NECESSARY DURING CONSTRUCTION TO MAINTAIN JOB SAFETY.
4. ANY DAMAGE CAUSED TO EXISTING PAVEMENT, CURBS, SIDEWALKS, RAMPS, ETC., SHALL BE REPAIRED BY THE CONTRACTOR TO THE SATISFACTION OF THE CITY PRIOR TO ACCEPTANCE OF THE SUBDIVISION.
5. AT INTERSECTIONS, WHICH HAVE VALLEY DRAINAGE, THE CROWN TO THE INTERSECTING STREET WILL BE CULMINATED AT A DISTANCE OF 40 FT. FROM THE INTERSECTING CURB LINE UNLESS OTHERWISE NOTED.
6. THE SUBGRADE MATERIAL WAS TESTED BY (NAME, ADDRESS & PHONE NUMBERS) ON (DATE) THE PAVEMENT SECTIONS WERE DESIGNED ACCORDINGLY. THE PAVEMENT SECTIONS ARE TO BE CONSTRUCTED AS FOLLOWS: SEE DETAIL ON SHEET 31
7. DENSITY TESTING OF COMPACTED SUBGRADE MATERIAL, FIRST COURSE AND SECOND COURSE COMPACTED BASE, SHALL BE MADE AT 500 FOOT INTERVALS.
8. ALL DENSITY TESTING IS THE RESPONSIBILITY OF THE OWNER OR CONTRACTOR AND SHALL BE WITNESSED BY THE CITY OF CEDAR PARK'S PROJECT REPRESENTATIVE. THE CONTRACTOR IS TO NOTIFY THE CITY 48 HOURS PRIOR TO SCHEDULED DENSITY TESTING.
9. TRAFFIC CONTROL SIGNS AND PAVEMENT MARKINGS SHALL BE IN ACCORDANCE WITH THE TEXAS MANUAL ON UNIFORM TRAFFIC CONTROL DEVICES AND INSTALLED AS DIRECTED BY THE CITY OF CEDAR PARK PRIOR TO CITY ACCEPTANCE OF THE SUBDIVISION.
10. SLOPE OF NATURAL GROUND ADJACENT TO THE RIGHT-OF-WAY SHALL NOT EXCEED 3:1. IF A 3:1 SLOPE IS NOT POSSIBLE, A RETAINING WALL OR SOME OTHER FORM OF SLOPE PROTECTION APPROVED BY THE CITY SHALL BE PLACED IN A LOCATION ACCEPTABLE TO THE CITY.
11. THE CITY, ENGINEER, CONTRACTOR, AND A REPRESENTATIVE FROM THE ASPHALT TESTING LAB SHALL ATTEND A PRE-PAVING CONFERENCE PRIOR TO THE START OF HMAC PAVING. THE CONTRACTOR SHALL GIVE THE CITY A MINIMUM OF 48 HOURS NOTICE PRIOR TO THIS MEETING (512-401-5000).
12. THE CONTRACTOR OR OWNER IS RESPONSIBLE FOR CONDUCTING TESTS ON ASPHALT PAVEMENT IN ACCORDANCE WITH THE REQUIREMENTS SET FORTH IN THE CITY OF AUSTIN STANDARD SPECIFICATION NO. 340. ANY RE-TESTING OF THE ASPHALT PAVEMENT SHALL BE CONDUCTED UNDER THE SUPERVISION OF THE ENGINEER AND THE CITY OF CEDAR PARK. RE-TESTING OF THE ASPHALT PAVEMENT SHALL BE LIMITED TO ONE RETEST PER PROJECT.
13. ALL PAVEMENT MARKINGS AND SIGNAGE SHALL COMPLY WITH MUTCD STANDARDS. STREET NAME LETTER SIZING SHALL BE IN ACCORDANCE WITH MUTCDTABLE2D-2.PAVEMENT MARKINGS SHALL BE THERMOPLASTIC UNLESS OTHERWISE NOTED.
14. ALL STREET NAME SIGNS SHALL BE HIGH INTENSITY RETRO GRADE.
15. NO FENCING OR WALL IS ALLOWED TO BE CONSTRUCTED SO THAT IT OBSTRUCTS THE SIGHT LINES OF DRIVERS FROM AN INTERSECTING PUBLIC ROADWAY OR FROM AN INTERSECTING PRIVATE DRIVEWAY. SIGHT LINES ARE TO BE MAINTAINED AS DESCRIBED IN CITY CODE SECTION 14.05.007. INSTALLING A FENCE OR WALL WHICH DOES NOT COMPLY WITH THE CITY'S SIGHT DISTANCE REQUIREMENTS OR FENCING REGULATIONS IS A VIOLATION OF THE CITY'S ORDINANCE AND MAY BE PUNISHABLE PURSUANT TO SECTION 1.01.009 OF CITY CODE.
16. TEMPORARY ROCK CRUSHING OPERATIONS ARE NOT ALLOWED. ALL SOURCES FOR FLEXIBLE BASE MATERIAL ARE REQUIRED TO BE APPROVED BY THE CITY. PRIOR TO BASE PLACEMENT ALL CURRENT TRIAXIAL TEST REPORTS FOR THE PROPOSED STOCKPILES ARE TO BE SUBMITTED TO THE CITY'S PROJECT REPRESENTATIVE FOR REVIEW AND APPROVAL.
17. UTILITY SERVICE BOXES OR OTHER UTILITY FACILITIES SHALL NOT BE INSTALLED WITHIN AREAS DETERMINED TO BE REQUIRED SIGHT LINES OF TWO INTERSECTING PUBLIC STREETS OR WITHIN SIGHT LINES OF A PRIVATE DRIVEWAY. SIGHT LINES ARE TO BE MAINTAINED COMPLIANT WITH TABLE 1-1 OF THE AUSTIN TRANSPORTATION CRITERIA MANUAL. UTILITIES DETERMINED BY THE DIRECTOR OF ENGINEERING TO BE PLACED WITHIN REQUIRED SIGHT LINES MAY BE REQUIRED TO BE RELOCATED AT THE EXPENSE OF THE CONTRACTOR PRIOR TO THE CITY ISSUING A CERTIFICATE OF OCCUPANCY OR PRIOR TO THE CITY'S ACCEPTANCE OF THE PROJECT IMPROVEMENTS.
18. ALL LANE CLOSURES SHALL OCCUR ONLY BETWEEN THE HOURS OF 9 AM AND 4 PM. ANY NIGHT TIME LANE CLOSURES REQUIRE APPROVAL BY THE DIRECTOR OF ENGINEERING AND SHALL OCCUR BETWEEN THE HOURS OF 8 PM AND 6 AM. LANE CLOSURES OBSERVED BY CITY DURING THE PEAK HOURS OF 6 AM TO 9 AM, OR 4 PM TO 8 PM WILL BE SUBJECT TO FINE PER CHAPTER 1 OF CITY ORDINANCE, AND/OR SUBSEQUENT ISSUANCE OF WORK STOPPAGE.
19. IMPROVEMENTS THAT INCLUDE RECONSTRUCTION OF AN EXISTING TYPE II DRIVEWAY SHALL BE DONE IN A MANNER WHICH RETAINS OPERATIONS OF NOT LESS THAN HALF OF THE DRIVEWAY AT ALL TIMES. FULL CLOSURE OF SUCH DRIVEWAY CAN BE CONSIDERED WITH WRITTEN AUTHORIZATION RETAINED BY THE CONTRACTOR FROM THE PROPERTY OWNER(S) OR ACCESS EASEMENT RIGHT HOLDER(S) OF THE DRIVEWAY ALLOWING FULL CLOSURE OF THE DRIVEWAY.
20. TREES MUST NOT OVERHANG WITHIN 10' VERTICALLY OF A SIDEWALK, OR 18' VERTICALLY OF A ROADWAY OR DRIVEWAY.

WASTEWATER NOTES:

1. REFER TO THE CITY OF CEDAR PARK PUBLIC WORKS UTILITY POLICY AND SPECIFICATIONS MANUAL.
2. MANHOLE FRAMES AND COVERS AND WATER VALVE BOXES SHALL BE RAISED TO FINISHED PAVEMENT GRADE AT THE OWNER'S EXPENSE BY THE CONTRACTOR WITH THE CITY APPROVAL. ALL UTILITY ADJUSTMENTS SHALL BE COMPLETED PRIOR TO FINAL PAVING CONSTRUCTION.
3. THE LOCATION OF ANY EXISTING UTILITY LINES SHOWN ON THESE PLANS MAY NOT BE ACCURATE. ANY DAMAGE TO EXISTING UTILITY LINES, BOTH KNOWN AND UNKNOWN, SHALL BE REPAIRED AT THE EXPENSE OF THE CONTRACTOR. THE CONTRACTOR SHALL LOCATE ALL UTILITIES PRIOR TO BIDDING THE PROJECT.
4. ALL IRON PIPE AND FITTINGS SHALL BE WRAPPED WITH AT LEAST 8 MIL. POLYETHYLENE WRAP.
5. ALL WATER MAINS, WASTEWATER MAINS AND SERVICE LINES SHALL MEET CITY OF AUSTIN MINIMUM COVER SPECIFICATIONS. ALL STREETS ARE TO BE CUT TO SUBGRADE PRIOR TO INSTALLATION OF WATER MAINS OR CUTS WILL BE ISSUED BY THE ENGINEER.
6. WHERE 48-INCHES OF COVER BELOW SUBGRADE CANNOT BE ACHIEVED FOR WASTEWATER SERVICE LINES ALTERNATE MATERIALS MAY BE USED. A MINIMUM OF 36-INCHES OF COVER BELOW SUBGRADE SHALL BE ACHIEVED. ANY WASTEWATER SERVICE LINE WITH COVER BETWEEN 36-INCH AND 48-INCHES SHALL BE SDR-26 PVC PRESSURE PIPE.
7. GASKETED PVC SEWER MAIN FITTINGS SHALL BE USED TO CONNECT SDR-35 PVC TO SDR-26 PVC PRESSURE PIPE OR C-900.
8. PIPE MATERIALS TO BE USED FOR CONSTRUCTION OF UTILITY LINES:
   WASTEWATER- SDR-26 PVC
   FORCE MAIN- N/A
   (NOTE: IF USING PVC, SDR-26 IS REQUIRED, SDR-35 WW IS NOT ALLOWED. FORCEMAINS SHALL BE EPOXY LINED DUCTILE IRON)
9. ALL SANITARY SEWERS, EXCLUDING SERVICE LINES, SHALL BE MANDREL TESTED PER TCEQ (TEXAS COMMISSION ON ENVIRONMENTAL QUALITY) CRITERIA. A MANDREL TEST WILL NOT BE PERFORMED UNTIL BACKFILL HAS BEEN IN PLACE FOR A MINIMUM OF 30 DAYS.
10. ALL WASTEWATER LINES 10" AND LARGER SHALL BE VIDEO RECORDED ACCORDING TO COA 510 AT THE CONTRACTOR'S EXPENSE. THE CONTRACTOR SHALL SUPPLY TWO COPIES TO THE CITY'S FIELD REPRESENTATIVE. NO SEPARATE PAY UNLESS NOTED ON THE BID FORM.
11. ALL SANITARY SEWERS, INCLUDING SERVICE LINES, SHALL BE AIR TESTED PER CITY OF AUSTIN STANDARD SPECIFICATIONS.
12. DENSITY TESTING OF COMPACTED BACKFILL SHALL BE MADE AT A RATE OF ONE TEST PER TWO FOOT LIFTS PER 500 FEET OF INSTALLED PIPE.
13. CITY SHALL BE GIVEN 48 HOURS NOTICE PRIOR TO ALL TESTING OF WATER AND WASTEWATER LINES. CITY INSPECTION IS REQUIRED FOR ALL TESTING OF WATER AND WASTEWATER LINES.
14. WHERE A WATER OR WASTEWATER LINE CROSSES ABOVE (OR BELOW) A STORM SEWER STRUCTURE AND THE BOTTOM (OR TOP) OF THE PIPE IS WITHIN 18 INCHES OF THE TOP (OR BOTTOM) OF THE UTILITY STRUCTURE, THE PIPE SHALL BE ENCASED WITH CONCRETE FOR A DISTANCE OF AT LEAST 1 FT. ON EITHER SIDE OF THE DITCH LINE OF THE UTILITY STRUCTURE OR THE STORM SEWER. CONCRETE ENCASEMENT WILL NOT BE REQUIRED FOR DUCTILE IRON (THICKNESS CLASS 50), AWWA C-900 (SDR18) 150 PSI RATED PVC IN SIZES TO 12 INCHES OR AWWA C-905 (SDR-25) 165 PSI RATED PVC IN SIZES LARGER THAN 12 INCHES. CONCRETE ENCASEMENT SHALL CONFORM TO C.O.A. STANDARD DETAIL 505-1.
15. THE ALLOWABLE (MAXIMUM) ADJUSTMENT FOR A MANHOLE SHALL BE 12" (INCHES) OR LESS.
16. WHERE A SEWER LINE CROSSES A WATER LINE, THE SEWER LINE SHALL BE ONE 20 FT. JOINT OF 150 PSI RATED PVC CENTERED ON CROSSING.
17. ALL MANHOLE AND INLET COVERS SHALL READ "CITY OF CEDAR PARK".
18. CONTRACTOR TO NOTIFY, AND OBTAIN APPROVAL FROM, THE CITY OF CEDAR PARK 48 HOURS PRIOR TO CONNECTING TO EXISTING CITY UTILITIES.
19. ALL PIPE BEDDING MATERIAL SHALL CONFORM TO CITY OF AUSTIN STANDARD SPECIFICATIONS.
20. UNLESS OTHERWISE SPECIFIED BY THE ENGINEER ALL CONCRETE IS TO BE CLASS "A" (5 SACK, 3000 PSI ~ 28-DAYS), AND ALL REINFORCING STEEL TO BE ASTM A615 60.
21. ALL WASTEWATER MANHOLES TO BE COATED WITH ORGANIC MATERIALS AND PROCEDURES LISTED IN CITY OF AUSTIN QUALIFIED PRODUCTS LIST NO. WW-511 (WW-511A AND WW-511B ARE NOT ALLOWED UNLESS MANHOLE IS BEING STRUCTURALLY REHABILITATED WITH APPROVAL BY PUBLIC WORKS). ALL MANHOLES WILL BE PRE-COATED OR COATED AFTER TESTING.
22. POLYBRID COATINGS ON WASTEWATER MANHOLES WILL NOT BE ALLOWED. ANY OTHER PRODUCT APPEARING ON THE COA SPL WW-511 IS ACCEPTABLE.
23. ALL PENETRATIONS OF EXISTING WASTEWATER MANHOLES ARE REQUIRED TO BE RE-COATED IN ACCORDANCE WITH THE SPECIFICATIONS LISTED IN NOTE 20.
24. ALL MANHOLES WILL BE VACUUM TESTED ONLY.
25. TRACER TAPE AND MARKING TAPE SHALL BE INSTALLED ON ALL WATER AND WASTEWATER MAINS IN ACCORDANCE WITH CITY OF AUSTIN STANDARDS, REGARDLESS OF THE TYPE OF PIPE.
26. ALL PRESSURE PIPE SHALL HAVE MECHANICAL RESTRAINT AND CONCRETE THRUST BLOCKING AT ALL VALVES, BENDS, TEES, PLUGS, AND OTHER FITTINGS.

WATER NOTES:

1. REFER TO THE CITY OF CEDAR PARK PUBLIC WORKS UTILITY POLICY AND SPECIFICATIONS MANUAL.
2. THE TOP OF VALVE STEMS SHALL BE AT LEAST 18", AND NO MORE THAN 36", BELOW FINISHED GRADE. VALVE STEM RISERS SHALL BE WELDED ON EACH END TO THE CITY'S SATISFACTION.
3. FIRE HYDRANT LEADS TO BE DUCTILE IRON, CLASS 350, AND INSTALLED PER CITY OF AUSTIN STANDARD SPECIFICATIONS AND DETAIL.
4. PRIOR TO INSTALLATION OF FIRE HYDRANTS, THE ENGINEER WILL PROVIDE THE CONTRACTOR ONE (1) CUT FROM A HUB PIN, ESTABLISHING THE ELEVATION OF THE BURY LINE.
5. THE ENGINEER SHALL PROVIDE CUTS FOR ALL WATER LINES AT ALL STORM SEWER CROSSINGS TO THE CITY OF CEDAR PARK.
6. PIPE MATERIALS TO BE USED FOR CONSTRUCTION OF UTILITY LINES:
   WATER - C-900 PVC / SCH. 40 PVC
   COPPER PIPE AND FITTINGS ARE NOT PERMITTED WITHIN THE RIGHT-OF-WAY.
   MINIMUM DR-14 12" DIA AND SMALLER. MINIMUM CLASS 250 DI LARGER THAN 12" DIA.
7. APPROVED 5 ¼" FIRE HYDRANTS:
   - AMERICAN FLOW CONTROL, B84B
   - MUELLER COMPANY, SUPER CENTURION 250
   - CLOW MEDALLION HYDRANT
   - AMERICAN AVK COMPANY, SERIES 27 (MODEL 2780)
   - ALL FIRE HYDRANTS MUST MEET CITY OF CEDAR PARK THREAD SPECIFICATIONS (NATIONAL THREAD)
   - BLUE REFLECTOR MARKERS SHALL BE LOCATED ON THE CENTERLINE OF THE PAVEMENT ACROSS FROM ALL FIRE HYDRANTS. PAVEMENT MARKERS AT INTERSECTIONS SHALL BE FOUR-SIDED.
8. SHOULD A TAPPING SADDLE BE APPROVED BY PUBLIC WORKS, THE SADDLE SHALL BE SMITH-BLAIR 662 STAINLESS STEEL TAPPING SLEEVES WITH ALL STAINLESS HARDWARE, OR APPROVED EQUAL. REQUESTS FOR ALTERNATE PROVIDERS SHALL BE MADE TO THE CITY OF CEDAR PARK PUBLIC WORKS. NO TAP EXCEEDING 2" IN DIAMETER WILL BE APPROVED.
9. ALL WATER LINES, INCLUDING SERVICE LINES, SHALL BE PRESSURE AND LEAK TESTED PER CITY OF AUSTIN STANDARD SPECIFICATIONS AND WITNESSED BY THE CITY OF CEDAR PARK REPRESENTATIVE. ALL TESTING IS TO BE THE RESPONSIBILITY OF THE CONTRACTOR, AND THE CONTRACTOR MAY BE REQUIRED TO RE-TEST LINES IF THE TESTING IS NOT WITNESSED BY THE CITY. CONTRACTOR MUST NOTIFY THE CITY OF CEDAR PARK 48 HOURS PRIOR TO ANY TESTING.
10. ALL WATER LINES SHALL BE STERILIZED AND BACTERIOLOGICALLY TESTED IN ACCORDANCE WITH CITY OF AUSTIN STANDARDS. THE CONTRACTOR IS RESPONSIBLE FOR STERILIZATION AND THE CITY OF CEDAR PARK IS RESPONSIBLE FOR SUBMITTING BACTERIOLOGICAL SAMPLES TO THE STATE. PUBLIC WORKS WILL REQUIRE A CONTRACTOR SPECIALIZED IN DISINFECTION FOR LARGE DIAMETER LINES OR CRITICAL INFRASTRUCTURE, SUBSIDIARY TO PIPE INSTALLATION.
11. DENSITY TESTING OF COMPACTED BACKFILL SHALL BE MADE AT A RATE OF ONE TEST PER TWO FOOT LIFTS PER 500 FEET OF INSTALLED PIPE.
12. CONTRACTOR TO OBTAIN A WATER METER FROM THE CITY OF CEDAR PARK FOR ANY WATER THAT MAY BE REQUIRED DURING CONSTRUCTION. (512-401-5000)
13. ALL WATER METER BOXES SHALL BE FORD GULF METER BOX WITH LOCKING LID.
   - SINGLE G-148-233
   - DUAL DG-148-243
   - 1" METER YL111 - 444
   - 1 ½" – 2" METER 1730-R (LID) & 1730-12 (BOX)/ACCEPTABLE BOXES FOR THIS SIZE OF METER
14. MANHOLE FRAMES AND COVERS AND WATER VALVE BOXES SHALL BE RAISED TO FINISHED PAVEMENT GRADE, WHEN IN PUBLIC STREETS, AT THE OWNER'S EXPENSE BY THE CONTRACTOR WITH CITY INSPECTION. ALL UTILITY ADJUSTMENTS SHALL BE COMPLETED PRIOR TO FINAL PAVING CONSTRUCTION.
15. THE LOCATION OF ANY EXISTING UTILITY LINES SHOWN ON THESE PLANS IS THE BEST AVAILABLE AND MAY NOT BE ACCURATE. ANY DAMAGE TO EXISTING UTILITY LINES, BOTH KNOWN AND UNKNOWN, SHALL BE REPAIRED AT THE EXPENSE OF THE CONTRACTOR.
16. ALL IRON PIPE AND FITTINGS SHALL BE WRAPPED WITH AT LEAST 8 MIL. POLYETHYLENE WRAP.
17. ALL WATER MAINS, WASTEWATER MAINS AND SERVICE LINES SHALL MEET CITY OF AUSTIN SPECIFICATIONS FOR MINIMUM COVER REQUIREMENTS. ALL STREETS ARE TO BE CUT TO SUBGRADE PRIOR TO INSTALLATION OF WATER MAINS OR CUTS WILL BE ISSUED BY THE ENGINEER.
18. CITY TO BE GIVEN 48 HOURS NOTICE PRIOR TO ALL TESTING OF WATER AND WASTEWATER LINES. CITY INSPECTION IS REQUIRED FOR ALL TESTING OF WATER AND WASTEWATER LINES.
19. WHERE A WATER OR WASTEWATER LINE CROSSES ABOVE (OR BELOW) A STORM SEWER STRUCTURE AND THE BOTTOM (OR TOP) OF THE PIPE IS WITHIN 18 INCHES OF THE TOP (OR BOTTOM) OF THE UTILITY STRUCTURE, THE PIPE SHALL BE ENCASED WITH CONCRETE FOR A DISTANCE OF AT LEAST 1 FT. ON EITHER SIDE OF THE DITCH LINE OF THE UTILITY STRUCTURE OR THE STORM SEWER. CONCRETE ENCASEMENT WILL NOT BE REQUIRED FOR DUCTILE IRON (THICKNESS CLASS 50), AWWA C-900 (SDR18) 150 PSI RATED PVC IN SIZES TO 12 INCHES OR AWWA C-905 (SDR-25) 165 PSI RATED PVC IN SIZES LARGER THAN 12 INCHES. CONCRETE ENCASEMENT SHALL CONFORM TO C.O.A. STANDARD DETAIL 505-1.
20. CONTRACTOR TO NOTIFY THE CITY OF CEDAR PARK 48 HOURS PRIOR TO CONNECTING TO EXISTING UTILITIES.
21. ALL PIPE BEDDING MATERIAL SHALL CONFORM TO CITY OF AUSTIN STANDARD SPECIFICATIONS.
22. TRACER TAPE SHALL BE INSTALLED ON ALL WATER AND WASTEWATER MAINS REGARDLESS OF THE TYPE OF PIPE OR DEPTH OF PIPE INSTALLED.
23. UNLESS OTHERWISE SPECIFIED BY THE ENGINEER ALL CONCRETE IS TO BE CLASS "A" (5 SACK, 3000 PSI ~ 28-DAYS), AND ALL REINFORCING STEEL TO BE ASTM A615 60.
24. THE CITY CONSIDERS PROTECTION OF ITS WATER SYSTEM PARAMOUNT TO CONSTRUCTION ACTIVITIES. CITY PERSONNEL WILL OPERATE, OR AUTHORIZE THE CONTRACTOR TO OPERATE, ALL WATER VALVES THAT WILL PASS THROUGH THE CITY'S POTABLE WATER. THE CONTRACTOR MAY NOT OPERATE ANY WATER VALVE, EXISTING OR PROPOSED, THAT WILL ALLOW WATER FROM THE CITY'S WATER SYSTEM TO FLOW TO A PROPOSED OR EXISTING WATER SYSTEM WITHOUT THE EXPRESS CONSENT OF THE CITY. NOTIFY THE CITY TWO BUSINESS DAYS IN ADVANCE OF ANY REQUEST TO OPERATE A WATER VALVE. THE GENERAL CONTRACTOR MAY BE FINED $500 OR MORE, INCLUDING ADDITIONAL THEFT OF WATER FINES, IF A WATER VALVE IS OPERATED IN AN UNAUTHORIZED MANNER, REGARDLESS OF WHO OPERATED THE VALVE.
25. ALL WATER VALVES OVER 24" IN SIZE SHALL HAVE A BY-PASS LINE AND VALVE INSTALLED. BY-PASS VALVES AND LINES ARE SUBSIDIARY TO THE COST OF THE VALVE UNLESS SPECIFICALLY IDENTIFIED ON THE BID FORM.
26. ALL WATER VALVES, INCLUDING THOSE OVER 12" IN SIZE, SHALL BE GATE VALVES.
27. A DOUBLE CHECK BACKFLOW DEVICE IN A VAULT SHALL BE INSTALLED AT THE PROPERTY LINE ON ALL PRIVATE FIRE LINES.
28. ALL POTABLE WATER SYSTEM COMPONENTS INSTALLED AFTER JANUARY 4, 2014, SHALL BE "LEAD FREE" ACCORDING TO THE UNITED STATES SAFE DRINKING WATER ACT. THE ONLY COMPONENTS EXEMPT FROM THIS REQUIREMENT ARE FIRE HYDRANTS. COMPONENTS THAT ARE NOT CLEARLY IDENTIFIED BY THE MANUFACTURER AS MEETING THIS REQUIREMENT BY MARKING, OR ON THE PRODUCT PACKAGING, OR BY PRE-APPROVED SUBMITTAL, WILL BE REJECTED FOR USE. A NSF CERTIFICATION WILL BE ADEQUATE IF THE CERTIFICATION HAS NOT EXPIRED AS OF JANUARY 4, 2014 AND REMAINS UNEXPIRED AT THE TIME OF CONSTRUCTION.
29. ALL PRESSURE PIPE SHALL HAVE MECHANICAL RESTRAINT AND CONCRETE THRUST BLOCKING AT ALL VALVES, BENDS, TEES, PLUGS, AND OTHER FITTINGS.

STORM SEWER NOTES:

1. MANHOLE FRAMES AND COVERS AND WATER VALVE BOXES SHALL BE RAISED TO FINISHED PAVEMENT GRADE AT THE OWNER'S EXPENSE BY THE CONTRACTOR WITH CITY INSPECTION. ALL UTILITY ADJUSTMENTS SHALL BE COMPLETED PRIOR TO FINAL PAVING CONSTRUCTION. CONTRACTOR SHALL BACKFILL AROUND MANHOLES AND JUNCTION BOXES WITH CLASS A CONCRETE.
2. ALL MANHOLE LIDS SHALL BE 32" OR LARGER, UNLESS EXPRESSLY APPROVED IN WRITING BY THE ENGINEERING DEPARTMENT.
3. THE LOCATION OF ANY EXISTING UTILITY LINES SHOWN ON THESE PLANS IS THE BEST AVAILABLE AND MAY NOT BE ACCURATE. ANY DAMAGE TO EXISTING UTILITY LINES, BOTH KNOWN AND UNKNOWN, SHALL BE REPAIRED AT THE EXPENSE OF THE CONTRACTOR.
4. PIPE MATERIALS TO BE USED FOR CONSTRUCTION OF UTILITY LINES: UNLESS OTHERWISE SPECIFIED BY THE ENGINEER, ALL STORM SEWER RCP SHALL BE CLASS III. CORRUGATED METAL PIPE IS NOT PERMITTED.
5. ALL MANHOLE AND INLET COVERS SHALL READ "CITY OF CEDAR PARK".
6. CONTRACTOR TO NOTIFY THE CITY OF CEDAR PARK 48 HOURS PRIOR TO CONNECTING TO EXISTING UTILITIES.
7. ALL PIPE BEDDING MATERIAL SHALL CONFORM TO CITY OF AUSTIN STANDARD SPECIFICATIONS.
8. UNLESS OTHERWISE SPECIFIED BY THE ENGINEER ALL CONCRETE IS TO BE CLASS "A" (5 SACK, 3000 PSI ~ 28-DAYS), AND ALL REINFORCING STEEL TO BE ASTM A615 60.
9. CONTRACTOR TO INSTALL AND MAINTAIN GEO-TEXTILE FABRIC BARRIER (INLET PROTECTION) AROUND STORM SEWER LEADS AND INLETS TO PREVENT SILT AND OTHER MATERIAL FROM ENTERING THE STORM SEWER COLLECTION SYSTEM.
10. INSTALL CONCRETE SAFETY END TREATMENTS TO ALL CULVERTS AND ENDS OF DRAINAGE PIPE.
11. ALL CURB INLETS SHALL HAVE AN ALMETEK 4" DISC "NO DUMPING DRAINS TO WATERWAY" MARKER.

SEQUENCE OF CONSTRUCTION NOTES:

THE FOLLOWING SEQUENCE OF CONSTRUCTION SHALL BE USED FOR ALL DEVELOPMENT. THE APPLICANT IS ENCOURAGED TO PROVIDE ANY ADDITIONAL DETAILS APPROPRIATE FOR THE PARTICULAR DEVELOPMENT.

1. TEMPORARY EROSION AND SEDIMENTATION CONTROLS ARE TO BE INSTALLED AS INDICATED ON THE APPROVED SITE PLAN OR SUBDIVISION CONSTRUCTION PLAN AND IN ACCORDANCE WITH THE EROSION SEDIMENTATION CONTROL PLAN (ESC) AND STORMWATER POLLUTION PREVENTION PLAN (SWPPP) THAT IS REQUIRED TO BE POSTED ON THE SITE. INSTALL TREE PROTECTION AND INITIATE TREE MITIGATION MEASURES.
2. THE GENERAL CONTRACTOR MUST CONTACT THE CITY INSPECTOR AT 512-401-5000, 72 HOURS PRIOR TO THE SCHEDULED DATE OF THE REQUIRED ON-SITE PRECONSTRUCTION MEETING.
3. THE GENERAL CONTRACTOR WILL FOLLOW THE EROSION SEDIMENTATION CONTROL PLAN (ESC) AND STORM WATER POLLUTION PREVENTION PLAN (SWPPP) POSTED ON THE SITE. TEMPORARY EROSION AND SEDIMENTATION CONTROLS WILL BE REVISED, IF NEEDED, TO COMPLY WITH CITY INSPECTORS' DIRECTIVES, AND REVISED CONSTRUCTION SCHEDULE RELATIVE TO THE WATER QUALITY PLAN REQUIREMENTS AND THE EROSION PLAN.
4. ROUGH GRADE THE POND(S) AT 100% PROPOSED CAPACITY. EITHER THE PERMANENT OUTLET STRUCTURE OR A TEMPORARY OUTLET MUST BE CONSTRUCTED PRIOR TO DEVELOPMENT OF EMBANKMENT OR EXCAVATION THAT LEADS TO PONDING CONDITIONS. THE OUTLET SYSTEM MUST CONSIST OF A SUMP PIT OUTLET AND AN EMERGENCY SPILLWAY MEETING THE REQUIREMENTS OF THE CITY OF AUSTIN DRAINAGE CRITERIA MANUAL, AS REQUIRED. THE OUTLET SYSTEM SHALL BE PROTECTED FROM EROSION AND SHALL BE MAINTAINED THROUGHOUT THE COURSE OF CONSTRUCTION UNTIL INSTALLATION OF THE PERMANENT WATER QUALITY POND(S).
5. TEMPORARY EROSION AND SEDIMENTATION CONTROLS WILL BE INSPECTED AND MAINTAINED IN ACCORDANCE WITH THE EROSION SEDIMENTATION CONTROL PLAN (ESC) AND STORM WATER POLLUTION PREVENTION PLAN (SWPPP) POSTED ON THE SITE.
6. BEGIN SITE CLEARING/CONSTRUCTION (OR DEMOLITION) ACTIVITIES.
7. UNDERGROUND UTILITIES WILL BE INSTALLED, INCLUDING FIRE HYDRANTS.
8. FIRE DEPARTMENT ACCESS WILL BE INSTALLED WHERE REQUIRED BY APPROVED SITE PLAN.
9. VERTICAL CONSTRUCTION MAY OCCUR AFTER THE PRE-VERTICAL INSPECTION HAS BEEN CLEARED BY THE FIRE MARSHAL.
10. PERMANENT WATER QUALITY PONDS OR CONTROLS WILL BE CLEANED OUT AND FILTER MEDIA WILL BE INSTALLED PRIOR TO/CONCURRENTLY WITH REVEGETATION OF SITE.
11. COMPLETE CONSTRUCTION AND START REVEGETATION OF THE SITE AND INSTALLATION OF LANDSCAPING.
12. UPON COMPLETION OF THE SITE CONSTRUCTION AND REVEGETATION OF A PROJECT SITE, THE DESIGN ENGINEER SHALL SUBMIT AN ENGINEER'S LETTER OF CONCURRENCE BEARING THE ENGINEER'S SEAL, SIGNATURE, AND DATE TO THE CITY INDICATING THAT CONSTRUCTION, INCLUDING REVEGETATION, IS COMPLETE AND IN SUBSTANTIAL COMPLIANCE WITH THE APPROVED PLANS. AFTER RECEIVING THIS LETTER, A FINAL INSPECTION WILL BE SCHEDULED BY THE CITY INSPECTOR.
13. UPON COMPLETION OF LANDSCAPE INSTALLATION OF A PROJECT SITE, THE LANDSCAPE ARCHITECT SHALL SUBMIT A LETTER OF CONCURRENCE TO THE CITY INDICATING THAT THE REQUIRED LANDSCAPING IS COMPLETE AND IN SUBSTANTIAL CONFORMITY WITH THE APPROVED PLANS. AFTER RECEIVING THIS LETTER, A FINAL INSPECTION WILL BE SCHEDULED BY THE CITY INSPECTOR.
14. AFTER A FINAL INSPECTION HAS BEEN CONDUCTED BY THE CITY INSPECTOR AND WITH APPROVAL FROM THE CITY INSPECTOR, REMOVE THE TEMPORARY EROSION AND SEDIMENTATION CONTROLS AND COMPLETE ANY NECESSARY FINAL REVEGETATION RESULTING FROM REMOVAL OF THE CONTROLS. CONDUCT ANY MAINTENANCE AND REHABILITATION OF THE WATER QUALITY PONDS OR CONTROLS.

M&S ENGINEERING
ELECTRICAL | CIVIL | STRUCTURAL | MEP
TXENG FIRM # F-1394 | TBPELS FIRM #10169800
WWW.MSENGR.COM | (830) 228-5446

STATE OF TEXAS
JENNIFER L. HENDERSON
116883
LICENSED PROFESSIONAL ENGINEER
09/18/2020

LAVISH SALON AND BOUTIQUE
901 N. VISTA RIDGE BLVD.
CEDAR PARK, TEXAS

GENERAL NOTES

JOB:8120ADAYA.005	
DATE: 18/09/2020	
DRAWN: AR	PM: JH
DESIGN: AR	DM: JH
PEER: JS	OTHER:

REVISIONS:

DELTA	DESCRIPTION	DATE

SHEET:

CITY PROJECT NUMBER: ____________

Date: Sep 18, 2020, 9:17am User ID: areilly
File: T:\active projects\2020\81 georgetown general civil\8120adaya.005 - lavish salon and boutique\dwg\Sheets\8120ADAYA.005-NOTES.dwg

TEXAS COMMISSION ON ENVIRONMENTAL QUALITY

CONTRIBUTING ZONE PLAN
GENERAL CONSTRUCTION NOTES

1. A WRITTEN NOTICE OF CONSTRUCTION MUST BE SUBMITTED TO THE TCEQ REGIONAL OFFICE AT LEAST 48 HOURS PRIOR TO THE START OF ANY GROUND DISTURBANCE OR CONSTRUCTION ACTIVITIES. THIS NOTICE MUST INCLUDE:
   - THE NAME OF THE APPROVED PROJECT;
   - THE ACTIVITY START DATE; AND
   - THE CONTACT INFORMATION OF THE PRIME CONTRACTOR.

2. ALL CONTRACTORS CONDUCTING REGULATED ACTIVITIES ASSOCIATED WITH THIS PROJECT SHOULD BE PROVIDED WITH COMPLETE COPIES OF THE APPROVED CONTRIBUTING ZONE PLAN (CZP) AND THE TCEQ LETTER INDICATING THE SPECIFIC CONDITIONS OF ITS APPROVAL. DURING THE COURSE OF THESE REGULATED ACTIVITIES, THE CONTRACTOR(S) SHOULD KEEP COPIES OF THE APPROVED PLAN AND APPROVAL LETTER ON-SITE.

3. NO HAZARDOUS SUBSTANCE STORAGE TANK SHALL BE INSTALLED WITHIN 150 FEET OF A WATER SUPPLY SOURCE, DISTRIBUTION SYSTEM, WELL, OR SENSITIVE FEATURE.

4. PRIOR TO BEGINNING ANY CONSTRUCTION ACTIVITY, ALL TEMPORARY EROSION AND SEDIMENTATION (E&S) CONTROL MEASURES MUST BE PROPERLY INSTALLED AND MAINTAINED IN ACCORDANCE WITH THE MANUFACTURERS SPECIFICATIONS. IF INSPECTIONS INDICATE A CONTROL HAS BEEN USED INAPPROPRIATELY, OR INCORRECTLY, THE APPLICANT MUST REPLACE OR MODIFY THE CONTROL FOR SITE SITUATIONS. THESE CONTROLS MUST REMAIN IN PLACE UNTIL THE DISTURBED AREAS HAVE BEEN PERMANENTLY STABILIZED.

5. ANY SEDIMENT THAT ESCAPES THE CONSTRUCTION SITE MUST BE COLLECTED AND PROPERLY DISPOSED OF BEFORE THE NEXT RAIN EVENT TO ENSURE IT IS NOT WASHED INTO SURFACE STREAMS, SENSITIVE FEATURES, ETC.

6. SEDIMENT MUST BE REMOVED FROM THE SEDIMENT TRAPS OR SEDIMENTATION BASINS WHEN IT OCCUPIES 50% OF THE BASIN'S DESIGN CAPACITY.

7. LITTER, CONSTRUCTION DEBRIS, AND CONSTRUCTION CHEMICALS EXPOSED TO STORMWATER SHALL BE PREVENTED FROM BEING DISCHARGED OFFSITE.

8. ALL EXCAVATED MATERIAL THAT WILL BE STORED ON-SITE MUST HAVE PROPER E&S CONTROLS.

9. IF PORTIONS OF THE SITE WILL HAVE A CEASE IN CONSTRUCTION ACTIVITY LASTING LONGER THAN 14 DAYS, SOIL STABILIZATION IN THOSE AREAS SHALL BE INITIATED AS SOON AS POSSIBLE PRIOR TO THE 14TH DAY OF INACTIVITY. IF ACTIVITY WILL RESUME PRIOR TO THE 21ST DAY, STABILIZATION MEASURES ARE NOT REQUIRED. IF DROUGHT CONDITIONS OR INCLEMENT WEATHER PREVENT ACTION BY THE 14TH DAY, STABILIZATION MEASURES SHALL BE INITIATED AS SOON AS POSSIBLE.

10. THE FOLLOWING RECORDS SHOULD BE MAINTAINED AND MADE AVAILABLE TO THE TCEQ UPON REQUEST:
    - THE DATES WHEN MAJOR GRADING ACTIVITIES OCCUR;
    - THE DATES WHEN CONSTRUCTION ACTIVITIES TEMPORARILY OR PERMANENTLY CEASE ON A PORTION OF THE SITE; AND
    - THE DATES WHEN STABILIZATION MEASURES ARE INITIATED.

11. THE HOLDER OF ANY APPROVED CZP MUST NOTIFY THE APPROPRIATE REGIONAL OFFICE IN WRITING AND OBTAIN APPROVAL FROM THE EXECUTIVE DIRECTOR PRIOR TO INITIATING ANY OF THE FOLLOWING:

    A. ANY PHYSICAL OR OPERATIONAL MODIFICATION OF ANY BEST MANAGEMENT PRACTICES (BMPS) OR STRUCTURE(S), INCLUDING BUT NOT LIMITED TO TEMPORARY OR PERMANENT PONDS, DAMS, BERMS, SILT FENCES, AND DIVERSIONARY STRUCTURES;

    B. ANY CHANGE IN THE NATURE OR CHARACTER OF THE REGULATED ACTIVITY FROM THAT WHICH WAS ORIGINALLY APPROVED;

    C. ANY CHANGE THAT WOULD SIGNIFICANTLY IMPACT THE ABILITY TO PREVENT POLLUTION OF THE EDWARDS AQUIFER; OR

    D. ANY DEVELOPMENT OF LAND PREVIOUSLY IDENTIFIED AS UNDEVELOPED IN THE APPROVED CONTRIBUTING ZONE PLAN.

Austin Regional Office	San Antonio Regional Office
12100 Park 35 Circle, Building A	14250 Judson Road
Austin, Texas 78753-1808	San Antonio, Texas 78233-4480
Phone (512) 339-2929	Phone (210) 490-3096
Fax (512) 339-3795	Fax (210) 545-4329

M&S ENGINEERING
ELECTRICAL | CIVIL | STRUCTURAL | MEP
TXENG FIRM # F-1394 | TBPELS FIRM #10169800
WWW.MSENGR.COM | (830) 228-5446

STATE OF TEXAS
JENNIFER L. HENDERSON
116883
LICENSED
PROFESSIONAL ENGINEER
09/18/2020

LAVISH SALON AND BOUTIQUE
901 N. VISTA RIDGE BLVD.
CEDAR PARK, TEXAS

TCEQ CONTRIBUTING ZONE
GENERAL CONSTRUCTION NOTES

JOB:8120ADAYA.005
DATE: 18/09/2020

DRAWN:	AR	PM:	JH
DESIGN:	AR	DM:	JH
PEER:	JS	OTHER:	

REVISIONS:

DELTA	DESCRIPTION	DATE

SHEET:

03 OF 40

CITY PROJECT NUMBER: _____

Date: Sep 18, 2020, 9:18am User ID: anelly
File: T:\active projects\2020\0 georgetown general civil\8120adaya.005 - lavish salon and boutique\dwg\Sheets\8120ADAYA.005-NOTES.dwg

GENERAL NOTES:

1. ENGINEER OF RECORD SHALL BE NOTIFIED 48-HOURS PRIOR TO THE START OF CONSTRUCTION
2. BLASTING IS NOT PERMITTED ON THIS PROJECT UNDER NO CIRCUMSTANCE.
3. ALL CONSTRUCTION OPERATIONS SHALL BE ACCOMPLISHED IN ACCORDANCE WITH APPLICABLE REGULATIONS OF THE U.S. OCCUPATIONAL SAFETY AND HEALTH ADMINISTRATION.
4. THESE PLANS DO NOT EXTEND TO OR INCLUDE DESIGNS OR SYSTEMS PERTAINING TO THE SAFETY OF THE CONSTRUCTION CONTRACTOR OR ITS EMPLOYEES, AGENTS OR REPRESENTATIVES IN THE PERFORMANCE OF THE WORK. THE SEAL OF THE REGISTERED PROFESSIONAL ENGINEER(S) HEREON DOES NOT EXTEND TO ANY SUCH SAFETY SYSTEMS THAT MAY NOW OR HEREAFTER BE INCORPORATED IN THE WORK.
5. THE TRENCH EXCAVATION AND SHORING SAFETY SYSTEM, AS OUTLINED IN THE TECHNICAL SPECIFICATIONS, WILL BE REQUIRED AS A MINIMUM TRENCH SAFETY MEASURE.
6. CONTRACTOR SHALL ASSURE HIMSELF THAT ALL CONSTRUCTION PERMITS HAVE BEEN OBTAINED PRIOR TO COMMENCEMENT OF WORK. REQUIRED PERMITS THAT CAN ONLY BE ISSUED TO CONTRACTOR ARE TO BE OBTAINED AT THE CONTRACTORS EXPENSE.
7. CONTRACTOR SHALL GIVE A MINIMUM OF 48 HOURS NOTICE TO ALL AUTHORIZED INSPECTORS, SUPERINTENDENTS, OR PERSONS IN CHARGE OF PRIVATE AND PUBLIC UTILITIES AFFECTED BY HIS OPERATIONS PRIOR TO COMMENCEMENT OF WORK.
8. CONTRACTOR SHALL TAKE ALL DUE PRECAUTIONS TO PROTECT EXISTING FACILITIES FROM DAMAGE. ANY DAMAGE TO EXISTING FACILITIES INCURRED AS A RESULT OF THESE CONSTRUCTION OPERATIONS ARE TO BE REPAIRED IMMEDIATELY BY THE CONTRACTOR TO AT LEAST THE PRE-EXISTING CONDITION AT NO ADDITIONAL COST TO OWNER.
9. LOCATION OF EXISTING UTILITIES SHOWN ON PLANS ARE APPROXIMATE. NO WARRANTY IS IMPLIED AS TO THE ACTUAL LOCATION OF EXISTING UTILITIES. CONTRACTOR TO FIELD VERIFY LOCATIONS OF EXISTING UTILITIES PRIOR TO COMMENCEMENT OF CONSTRUCTION.
10. WHEN UNLOCATED OR INCORRECTLY LOCATED UNDERGROUND PIPING OR A BREAK IN A LINE OR OTHER UTILITIES AND SERVICES ARE ENCOUNTERED DURING SITE WORK OPERATIONS, THE CONTRACTOR SHALL NOTIFY THE APPLICABLE UTILITY COMPANY IMMEDIATELY TO OBTAIN PROCEDURE DIRECTIONS. THE CONTRACTOR SHALL COOPERATE WITH THE APPLICABLE UTILITY COMPANY IN MAINTAINING ACTIVE SERVICES IN OPERATION.
11. THE CONTRACTOR SHALL MAINTAIN ACCESS TO PUBLIC AND PRIVATE FACILITIES DURING CONSTRUCTION. CONSTRUCTION ACTIVITIES TO BE COORDINATED WITH THE OWNER.
12. THE CONTRACTOR SHALL COORDINATE INTERRUPTIONS OF ALL UTILITIES AND SERVICES WITH APPLICABLE UTILITY COMPANY OR COMPANIES. ALL WORK SHALL BE IN ACCORDANCE WITH THE REQUIREMENTS OF THE APPLICABLE UTILITY COMPANY OR AGENCY INVOLVED.
13. THE CONTRACTOR SHALL LOCATE, PROTECT, AND MAINTAIN BENCHMARKS, MONUMENTS, AND CONTROL POINTS. RE-ESTABLISH DISTURBED OR DESTROYED ITEMS BY REGISTERED PUBLIC SURVEYOR IN THE STATE OF TEXAS AT NO ADDITIONAL COST TO OWNER.
14. EXISTING PAVING, BUILDING, AND OTHER ITEMS SHOWN ON THESE PLANS NOT SPECIFICALLY RELATED TO THE WORK OF THE CONTRACTOR IS FOR INFORMATION ONLY.
15. DEMOLITION PERMITS (IF NEEDED) ARE TO BE OBTAINED BY THE CONTRACTOR.
16. EXISTING SURFACE AND SUBSURFACE STRUCTURES (GAS MAINS, WATER MAINS, STORM SEWER, TELEPHONE CABLES, ETC.) ARE SHOWN ON THE PLANS IF THEIR LOCATION HAS BEEN DETERMINED, BUT IT SHALL BE THE RESPONSIBILITY OF THE CONTRACTOR TO AVOID DAMAGING THESE EXISTING STRUCTURES WHETHER OR NOT THEY ARE SHOWN ON THE PLANS. THE OWNER AND ENGINEER ASSUME NO RESPONSIBILITY FOR FAILURE TO SHOW ANY OR ALL OF THESE STRUCTURES ON THE PLANS OR TO SHOW THEM IN THEIR EXACT LOCATION. IF ANY STRUCTURE IS DAMAGED BY THE CONTRACTOR, IT SHALL BE HIS RESPONSIBILITY TO REPAIR THE DAMAGE AT HIS EXPENSE AND RESTORE THE STRUCTURE TO IT'S ORIGINAL CONDITION.
17. IT SHALL BE THE CONTRACTORS RESPONSIBILITY TO VERIFY LOCATIONS, ELEVATIONS AND DIMENSIONS OF ADJACENT AND/OR CONFLICTING UTILITIES IN ADVANCE OF CONSTRUCTION IN ORDER THAT ADJUSTMENTS CAN BE MADE TO PROVIDE ADEQUATE CLEARANCE, IF REQUIRED. THE CONTRACTOR SHALL PRESERVE AND PROTECT PUBLIC UTILITIES AT ALL TIMES DURING CONSTRUCTION. ANY DAMAGE TO UTILITIES RESULTING FROM THE CONTRACTORS OPERATIONS SHALL BE RESTORED AT HIS EXPENSE. THE ENGINEER SHALL BE NOTIFIED WHEN PROPOSED FACILITY GRADES CONFLICT WITH EXISTING UTILITY GRADES.
18. ALL CONCEPTS, IDEAS, DESIGNS, ARRANGEMENTS, AND PLANS INDICATED OR REPRESENTED BY THESE INSTRUMENTS, AS OUTLINED ON THE TITLE SHEET INDEX, AND BY ANY ADDENDUM ARE OWNED BY AND ARE THE PROPERTY OF M & S ENGINEERING, L.L.C. AND WERE CREATED AND DEVELOPED FOR THE USE ON AND IN CONNECTION WITH THE SPECIFIED PROJECT. THESE CONCEPTS, IDEAS, DESIGN, ARRANGEMENTS, OR PLANS SHALL NOT BE USED BY ANY PERSON, FIRM OR CORPORATION FOR ANY PURPOSE WHATSOEVER WITHOUT THE WRITTEN PERMISSION AND CONSENT OF M & S ENGINEERING, L.L.C. OF SPRING BRANCH, TEXAS.
19. A PRE-CONSTRUCTION CONFERENCE IS TO BE HELD PRIOR TO BEGINNING CONSTRUCTION. THE CONFERENCE SHALL TAKE PLACE AT A LOCATION AND TIME SELECTED BY OWNER AND ENGINEER. CONTRACTOR TO ARRANGE A MEETING DATE WITH THE OWNER AT LEAST SEVEN DAYS PRIOR TO THE MEETING TIME.
20. CONTRACTOR SHALL NOTIFY THE TEXAS ONE CALL CENTER PRIOR TO ANY CONSTRUCTION.
21. IN THE EVENT OF A DISCREPANCY WITHIN THE PLANS OR BETWEEN THE PLANS AND SPECIFICATIONS, THE CONTRACTOR SHALL BE REQUIRED TO PERFORM THE MOST INVOLVED WORK TO SATISFY THE INTENT OF THE PROJECT.
22. TOPSOIL REPLACEMENT IS REQUIRED IN ALL AREAS. AREAS OF BACKFILL, EXCAVATION, OR GRADING SHALL BE BROUGHT TO WITHIN SIX INCHES OF FINAL GRADE AND BROUGHT TO GRADE WITH COMPACTED TOP SOIL. DISTURBED AREA BETWEEN ROW AND EDGE OF PAVEMENT TO BE VEGETATED ACCORDING TO COSA ITEM 516 "HYDROMULCH."
23. MAIL SERVICE SHALL BE MAINTAINED FOR THE DURATION OF THE PROJECT. PAYMENT FOR REMOVAL, TEMPORARY RELOCATION AND PERMANENT LOCATION OF ALL MAILBOXES SHALL CONSIDERED SUBSIDIARY TO OTHER ITEMS OF WORK.
24. EXISTING SIGNS TO BE RELOCATED TO WITHIN A MINIMUM OF SEVEN FEET FROM THE PROPOSED EDGE OF PAVEMENT.

GENERAL ENVIRONMENTAL NOTES:

1. CONTRACTOR SHALL COMPLY WITH ALL APPLICABLE LOCAL, STATE AND FEDERAL REQUIREMENTS REGARDING EXCESS AND WASTE MATERIALS, INCLUDING METHODS OF HANDLING AND DISPOSAL.
2. CONTRACTOR SHALL LOCATE MATERIAL STORAGE AREAS AWAY FROM STORM WATER CONVEYANCE SYSTEMS. PROVIDE PROTECTED STORAGE AREAS FOR CHEMICALS, PAINTS, SOLVENTS, FERTILIZERS, AND OTHER POTENTIALLY TOXIC MATERIALS.
3. FUEL STORAGE IS ALLOWED ON THIS PROJECT AND SHALL BE IN ACCORDANCE WITH APPLICABLE REGULATORY REQUIREMENTS.
4. THE CONTRACTOR SHALL ADVISE OWNER IMMEDIATELY, VERBALLY AND IN WRITING, OF ANY FUEL OR TOXIC MATERIALS SPILLS WITHIN THE PROJECT/CONSTRUCTION AREA AND THE ACTIONS TO BE TAKEN TO REMEDY THE PROBLEM.
5. THE CONTRACTOR SHALL DISPOSE OF FUELS, HAZARDOUS MATERIALS, AND CONTAMINATED EXCAVATIONS IN A LEGALLY APPROVED MANNER.
6. NO OPEN BURNING IS ALLOWED ON THIS PROJECT.

STORM WATER NOTES:

1. THROUGHOUT THE CONSTRUCTION, AND AT THE COMPLETION OF CONSTRUCTION, THE CONTRACTOR SHALL ASSURE THAT DRAINAGE OF STORM WATER RUNOFF IS NOT BLOCKED.

SITE GRADING NOTES:

1. THE CONTRACTOR SHALL CONTROL DUST CAUSED BY THE WORK AND COMPLY WITH POLLUTION CONTROL REGULATIONS OF GOVERNING AUTHORITIES.
2. ALL EXCESS EXCAVATED MATERIAL IS TO BE REMOVED FROM THE SITE. THE EXCESS EXCAVATION MATERIAL SHALL NOT BE STOCKPILED.
3. ADJUST MANHOLES COVERS, VALVE BOXES, ELECTRICAL MANHOLES, ETC. TO MATCH PROPOSED FINISHED GRADE (NO SEPARATE PAY).

PAVING NOTES / TRAFFIC CONTROL NOTES:

1. ANY EXISTING PAVEMENT, CURBS, AND/OR SIDEWALK DAMAGED OR REMOVED BY THE CONTRACTOR ARE TO BE REPAIRED BY THE CONTRACTOR TO AT LEAST THE PRE-EXISTING CONDITION AT HIS EXPENSE BEFORE ACCEPTANCE OF THE WORK.
2. TRAFFIC CONTROLS DURING CONSTRUCTION TO BE CONTRACTORS RESPONSIBILITY AND INSTALLED IN ACCORDANCE WITH THE MANUAL ON UNIFORM TRAFFIC CONTROL DEVICES.
3. THE CONTRACTOR SHALL MAINTAIN AT LEAST ONE TRAFFIC LANE OPEN AT ALL TIMES DURING CONSTRUCTION (ALL AFFECTED STREETS).

CONCRETE CONSTRUCTION NOTES:

1. ALL STRUCTURAL CONCRETE SHALL HAVE A MINIMUM 28 DAY COMPRESSIVE STRENGTH AS NOTED IN THE PLANS.
2. ALL REINFORCING BARS SHALL CONFORM TO ASTM A-305 AND ASTM A-316, GRADE 60.
3. ALL CONCRETE AND REINFORCING STEEL SHALL CONFORM TO CURRENT A.C.I. CODE.
4. ALL BAR SPLICES, CORNER DOWELS, AND JOINT DOWELS SHALL HAVE A MINIMUM LAP LENGTH OF 40 BAR DIAMETERS OR 30", WHICHEVER IS GREATER.
5. NO FLY ASH ADDITIVES WILL BE PERMITTED IN STRUCTURAL CONCRETE.

UTILITY NOTES:

1. THE ENGINEER ASSUMES NO RESPONSIBILITY FOR THE ACCURACY OF THE LOCATION OF THE UNDERGROUND UTILITIES. THE CONTRACTOR SHALL BE RESPONSIBLE FOR LOCATING AND AVOIDING ALL EXISTING UTILITIES.
2. CONTRACTOR IS RESPONSIBLE FOR VERTICAL CONTROL OF ALL UTILITIES, AND SHALL ADJUST AS NEEDED.
3. ALL UTILITY TRENCH COMPACTION TESTS WITHIN THE STREET PAVEMENT SECTION SHALL BE THE RESPONSIBILITY OF THE CONTRACTOR AND VERIFIED BY THE OWNER'S TESTING PROVIDER. FILL MATERIAL SHALL BE PLACED IN UNIFORM LAYERS NOT TO EXCEED TWELVE INCHES (12") LOOSE. EACH MATERIAL SHALL BE COMPACTED AS SPECIFIED AND TESTED FOR DENSITY AND MOISTURE IN ACCORDANCE WITH TEST METHODS TEX-113-E, TEX-114-E, TEX-115-E. THE NUMBER OF LOCATIONS OF REQUIRED TESTS SHALL BE DETERMINED BY THE ENGINEER, APPROVED BY THE STREET INSPECTOR AND AGREED TO AT THE PRE-CONSTRUCTION MEETING. UPON COMPLETION OF TESTING THE OWNER'S TESTING PROVIDER SHALL PROVIDE THE STREET INSPECTOR WITH ALL TESTING DOCUMENTATION AND A CERTIFICATION STATING THAT THE PLACEMENT OF FILL MATERIAL HAS BEEN COMPLETED IN ACCORDANCE WITH THE PLANS.

SAFETY FENCE NOTES:

1. SAFETY FENCE SHALL BE USED TO PROTECT ALL EXCAVATIONS AND TO SEPARATE CONSTRUCTION ACTIVITIES FROM PEDESTRIAN, DURING THE ENTIRE CONSTRUCTION PERIOD.
2. ALL SAFETY FENCING SHALL BE PLASTIC, 4' MINIMUM HEIGHT AND ORANGE IN COLOR.
3. SAFETY FENCE USED WITHIN THE ROADWAY SHALL BE REFLECTORIZED WITH A MINIMUM OF TWO (2) STRIPS OF RETROREFLECTIVE MATERIAL. A MINIMUM OF 1' WIDE THE LENGTH OF THE FENCE OR DELINEATED BY CHANNELIZING DEVICES.
4. SAFETY FENCE USED TO SEPARATE SIDEWALKS FROM CONSTRUCTION ACTIVITIES SHALL HAVE MINIMUM ENCROACHMENT TO THE SIDEWALK.
5. FENCE MATERIAL SHALL BE SUPPORTED FROM $\frac{1}{4}$" DIA. NYLON ROPE FROM POSTS SPACED ON A MAXIMUM 8 FT. CENTERS. POSTS SHALL EXTEND 4' ABOVE NATURAL GROUND. FENCE MATERIAL SHALL BE SECURED TO POSTS W/ PLASTIC WIRE TIES, MINIMUM 3 PER POST.
6. POST SHALL INCLUDE SUPPORT BRACES SUFFICIENT TO HANDLE ALL LOADS.
7. PAYMENT FOR SECURITY FENCE SHALL BE BASED ON A LUMP SUM FOR EACH EXTENSION INCLUDING ALL INCIDENTAL WORK (LABOR, MATERIALS, EQUIPMENT, ETC.)

TRENCH EXCAVATION SAFETY PROTECTION:

CONTRACTOR AND/OR CONTRACTOR'S INDEPENDENTLY RETAINED EMPLOYEE OR STRUCTURAL DESIGN/GEOTECHNICAL SAFETY/EQUIPMENT CONSULTANT, IF ANY SHALL REVIEW THESE PLANS AND ANY GEOTECHNICAL INFORMATION AND THE ANTICIPATED INSTALLATION SITES WITHIN THE PROJECT WORK AREA IN ORDER TO IMPLEMENT CONTRACTOR'S TRENCH EXCAVATION SAFETY PROTECTION SYSTEMS, PROGRAMS AND/OR PROCEDURES FOR THE PROJECT DESCRIBED IN THE CONTRACT DOCUMENTS. THE CONTRACTOR'S IMPLEMENTATION OF THESE SYSTEMS, PROGRAMS AND/OR PROCEDURES SHALL PROVIDE FOR ADEQUATE TRENCH EXCAVATION SAFETY PROTECTION THAT COMPLY WITH AS A MINIMUM, OSHA STANDARDS FOR TRENCH EXCAVATIONS. SPECIFICALLY, CONTRACTOR AND/OR CONTRACTOR'S INDEPENDENTLY RETAINED EMPLOYEE OR SAFETY CONSULTANT SHALL IMPLEMENT A TRENCH SAFETY PROGRAM IN ACCORDANCE WITH OSHA STANDARDS GOVERNING THE PRESENCE AND ACTIVITIES OF INDIVIDUALS WORKING IN AND AROUND TRENCH EXCAVATION.

SPECIAL CONDITIONS AND NOTES:

1. EXISTING UTILITIES IN THE AREA ARE SHOWN IN ACCORDANCE WITH ASCE 38-02 "STANDARD GUIDELINES FOR THE COLLECTION AND DEPICTION OF EXISTING SUBSURFACE UTILITY DATA" AS SPECIFIED IN THE SIGNED CONTRACT SCOPE OF WORK. IT IS THE CONTRACTOR'S RESPONSIBILITY TO NOTIFY THE TEXAS ONE CALL CENTER PRIOR TO THE START OF ANY CONSTRUCTION. IT IS THE CONTRACTOR'S RESPONSIBILITY TO FIELD VERIFY THE EXACT LOCATION AND DEPTH OF ALL EXISTING UTILITIES BEFORE COMMENCING WORK.
2. ALL UTILITY SYMBOLS SHOWN REPRESENT APPROXIMATE LOCATIONS UNLESS OTHERWISE NOTED. CONTRACTOR SHALL REFER TO THE APPROPRIATE AGENCY'S STANDARD SPECIFICATIONS AND INSTALLATION DETAILS FOR ACTUAL LOCATIONS UNLESS OTHERWISE DIRECTED BY THE ENGINEER.
3. ADJUST EXISTING WATER METERS/BOXES TO FINISHED GRADE AS REQUIRED.

M&S ENGINEERING
ELECTRICAL | CIVIL | STRUCTURAL | MEP
TXENG FIRM # F-1394 | TBPELS FIRM #10169800
WWW.MSENGR.COM | (830) 228-5446

STATE OF TEXAS
JENNIFER L. HENDERSON
116883
LICENSED PROFESSIONAL ENGINEER
09/18/2020

LAVISH SALON AND BOUTIQUE
901 N. VISTA RIDGE BLVD.
CEDAR PARK, TEXAS

CONSTRUCTION NOTES

JOB:8120ADAYA.005	
DATE: 18/09/2020	
DRAWN: AR	PM: JH
DESIGN: AR	DM: JH
PEER: JS	OTHER:

REVISIONS:

DELTA	DESCRIPTION	DATE

SHEET:

04 OF 40

CITY PROJECT NUMBER: ______________

Date: Sep 18, 2020, 9:18am User ID: areilly
File: T:\active projects\2020\81 georgetown general civil\8120adaya.005 - lavish salon and boutique\dwg\Sheets\8120ADAYA.005-NOTES.dwg

LEGEND

	EXISTING WROUGHT IRON FENCE
	EXISTING CHAIN LINK FENCE
	EXISTING WIRE FENCE
	EXISTING WOOD FENCE
	EXISTING GUARDRAIL
EX OE	EXISTING OVERHEAD ELECTRIC LINE
EX UE	EXISTING UNDERGROUND ELECTRIC LINE
EX FOC	EXISTING FIBER OPTIC LINE
EX GAS	EXISTING GAS LINE
EX WW	EXISTING WASTEWATER LINE (THICKNESS INDICATES INNER PIPE DIAMETER)
EX SD	EXISTING STORM SEWER LINE (THICKNESS INDICATES INNER PIPE DIAMETER)
EX OT	EXISTING OVERHEAD TELEPHONE LINE
EX UT	EXISTING UNDERGROUND TELEPHONE LINE
EX W	EXISTING WATER LINE (THICKNESS INDICATES INNER PIPE DIAMTER)
599 600	EXISTING CONTOURS, WITH ELEVATION LABELED
	EXISTING CURB AND GUTTER
	EXISTING WASTEWATER MANHOLE (DRAWN TO SCALE)
EX. CO	EXISTING WASTEWATER CLEANOUT
D	EXISTING STORM SEWER MANHOLE (DRAWN TO SCALE)
D	EXISTING CURB INLET (DRAWN TO SCALE)
	EXISTING FDC
EX. FH	EXISTING FIRE HYDRANT
EX. WV	EXISTING GATE VALVE
	EXISTING LIGHT POLE
TAG TAG	EXISTING TREES / HERITAGE TREES (SIZE ADJUSTED PER TREE) TAG REFERS TO TREE SURVEY DATA TABLE
WM	EXISTING WATER METER
W	EXISTING WATER WELL
	EXISTING HOSE BIB/FAUCET
	EXISTING UTILITY POLE
SIGN TEXT	EXISTING SIGN (TEXT VARIES)
	EXISTING BENCHMARK

	PROPERTY LINE
	LOT LINE
599 600	PROPOSED CONTOURS
	NEW WROUGHT IRON FENCE
	NEW CHAIN LINK FENCE
	NEW WIRE FENCE
	NEW WOOD FENCE
	NEW CURB AND GUTTER
LOC	LIMITS OF CONSTRUCTION
ADA	ACCESSIBLE ROUTE
	NEW WASTEWATER MANHOLE (DRAWN TO SCALE)
	NEW WASTEWATER CLEANOUT
	NEW GATE VALVE
	NEW LIGHT POLE

ABBREVIATIONS LEGEND

EX.	EXISTING
O.C.E.W.	ON CENTER, EACH WAY
TYP.	TYPICAL
APPROX.	APPROXIMATE

M&S ENGINEERING
ELECTRICAL | CIVIL | STRUCTURAL | MEP
TXENG FIRM # F-1394 | TBPELS FIRM #10169800
WWW.MSENGR.COM | (830) 228-5446

STATE OF TEXAS
JENNIFER L. HENDERSON
116883
LICENSED
PROFESSIONAL ENGINEER
09/18/2020

LAVISH SALON AND BOUTIQUE
901 N. VISTA RIDGE BLVD.
CEDAR PARK, TEXAS

LEGEND AND ABBREVIATIONS

JOB:8120ADAYA.005

DATE: 18/09/2020

DRAWN:	AR	PM:	JH
DESIGN:	AR	DM:	JH
PEER:	JS	OTHER:	

REVISIONS:

DELTA	DESCRIPTION	DATE

SHEET:

05 OF 40

CITY PROJECT NUMBER: _____

Date: Sep 18, 2020, 9:18am User ID: areilly
File: T:\active projects\8120283 georgetown general civil\8120adaya.005 - lavish salon and boutique\dwg\Sheets\8120ADAYA.005-NOTES.dwg

The Shops at Vista Ridge

BEING 40.57 ACRES OF LAND OUT OF AND A PORTION OF THAT CERTAIN 139.53 ACRE TRACT OF LAND CONVEYED TO CAROLVILLE, LTD. IN VOLUME 1918, PAGE 196 OF THE OFFICIAL PUBLIC RECORDS OF WILLIAMSON COUNTY, TEXAS.

0 100 200
SCALE 1"=200'

LEGEND
- ● IRON ROD FOUND
- ○ IRON ROD SET
- ■ CONCRETE MONUMENT FOUND
- △ 60d NAIL FOUND
- ✱ COTTON SPINDLE SET

BM= CITY OF CEDAR PARK MONUMENT 41, ON THE NORTHERN SIDE OF FM 1431 AND EASTERN SIDE OF ARROWPOINT DRIVE FACING COTTONWOOD LIFT STATION FEMA ELEVATION= 874.62' MSL

LOCATION MAP
(N.T.S.)

ALL LOTS CONTAINED IN THIS SUBDIVISION AND USERS THEREOF SHALL HAVE RECIPROCAL ACCESS FOR INGRESS AND EGRESS THROUGH ALL DRIVE LANES, FIRE LANES, AND DRIVEWAYS FROM TIME TO TIME EXISTING WITHIN THE LOTS COVERED BY THIS SUBDIVISION PLAT. SETBACKS NOT SHOWN ON LOTS SHALL CONFORM TO THE CITY OF CEDAR PARK ZONING ORDINANCE.

THE UNDERSIGNED DOES FURTHER CERTIFY THAT THE PROPERTY DESCRIBED HERE IS WITHIN A 100 YEAR FLOOD PLAIN AS IDENTIFIED BY THE FEDERAL INSURANCE ADMINISTRATION FLOOD HAZARD BOUNDARY MAP, PANEL NO. 48491C 0470E, EFFECTIVE SEPTEMBER 26, 2008 FOR WILLIAMSON COUNTY, TEXAS.

I, STEVEN W. WOMACK, A REGISTERED PROFESSIONAL LAND SURVEYOR, AM AUTHORIZED UNDER THE LAWS OF THE STATE OF TEXAS TO PRACTICE THE PROFESSION OF SURVEYING AND HEREBY CERTIFY THAT THIS PLAT WAS PREPARED FROM AN ACTUAL AND ACCURATE ON-THE-GROUND SURVEY OF THE LAND AND THAT THE CORNER MONUMENTS SHOWN HEREON WERE PROPERLY PLACED UNDER MY PERSONAL SUPERVISION, IN ACCORDANCE WITH CHAPER 9, SECTION 9.306 OF THE CITY CODE OF CEDAR PARK, TEXAS, THAT THE FIELD NOTES SHOWN HEREON CLOSE AND THAT ALL EXISTING EASEMENTS OF RECORD ARE SHOWN ON THIS PLAT.

5-21-09
STEVEN W. WOMACK
REGISTERED PROFESSIONAL LAND SURVEYOR No. 5025

STATE OF TEXAS REGISTERED STEVEN W. WOMACK 5025 PROFESSIONAL LAND SURVEYOR

TOPO/BEARING/COORDINATE BASIS
ELIPSOID: WGS 1984/GRS 1980
PROJECTION: TEXAS CENTRAL NAD 83
GEOID MODEL: GEOID 99

SHEET 1 OF 2	Scale: 1"= 200' Date: 5-21-2009
	Field Book: Disk:
	Drawn by: CORY THORNHILL
	File Name: 08-073PLAT1.DWG
	Approved by: S.W.
	08-073

The Shops at Vista Ridge

WILLIAMSON COUNTY, TEXAS

3DS, Inc.
Land Surveyors
GPS Services
Subdivisions • Topographic
Const ction • Commercial • Boundaries
P.O. Box 850
Liberty Hill, Texas 78642
3DS Three Dimensional Services
(512) 515-5888
Fax 515-5878

CABINET FF

SLIDE 385

DOC. # 2009045842

Unofficial Document

M&S ENGINEERING
ELECTRICAL | CIVIL | STRUCTURAL | MEP
TXENG FIRM # F-1394 | TBPELS FIRM #10169800
WWW.MSENGR.COM | (830) 228-5446

STATE OF TEXAS
JENNIFER L. HENDERSON
116883
LICENSED
PROFESSIONAL ENGINEER
09/18/2020

LAVISH SALON AND BOUTIQUE
901 N. VISTA RIDGE BLVD.
CEDAR PARK, TEXAS

PLAT

JOB:8120ADAYA.005			
DATE: 18/09/2020			
DRAWN:	AR	PM:	JH
DESIGN:	AR	DM:	JH
PEER:	JS	OTHER:	

REVISIONS:

DELTA	DESCRIPTION	DATE

SHEET:
06 OF 40

CITY PROJECT NUMBER: _____

Date: Sep 18, 2020, 12:21pm User ID: amelly
File: T:\active projects\2020\8120adaya 005 - lavish salon and boutique\dwg\Sheets\8120ADAYA.005-PLAT.dwg

CABINET FF

SLIDE 386

BEING 40.57 ACRES OF LAND SITUATED IN THE SAMUEL DAYMON SURVEY, ABSTRACT NO. 170 IN WILLIAMSON COUNTY, TEXAS AND BEING A PORTION OF THAT CERTAIN 139.53 ACRE TRACT OF LAND CONVEYED TO CAROLVILLE, LTD. IN VOLUME 1918, PAGE 196 OF THE OFFICIAL PUBLIC RECORDS OF WILLIAMSON COUNTY, TEXAS, SAID 40.57 ACRE BEING MORE PARTICULARLY DESCRIBED AS METES AND BOUNDS AS FOLLOWS;

BEGINNING AT AN IRON ROD FOUND FOR AT THE SOUTHEASTERN CORNER OF THE SAID 40.57 ACRES, POINT BEING THE NORTHEASTERN CORNER OF THAT CERTAIN LOT 52A A WATER QUALITY EASEMENT AS DESCRIBED IN PLAT IN CABINET AA SLIDE 5 IN THE OFFICIAL PUBLIC RECORDS OF WILLIAMSON COUNTY, TEXAS, POINT BEING ON THE WESTERN RIGHT OF WAY OF NORTH VISTA RIDGE BLVD, POINT BEING THE POINT OF BEGINNING OF THE HEREIN DESCRIBED TRACT OF LAND;

THENCE S74°58'56"W FOLLOWING THE COMMON PROPERTY LINES OF THE SAID 40.57 ACRES AND THE SAID LOT 52A FOR A DISTANCE OF 1393.42 FEET TO A 60d NAIL FOUND AT THE SOUTHWESTERN CORNER OF THE SAID 40.57 ACRES, POINT BEING THE SOUTHEASTERN CORNER OF THAT CERTAIN 12.281 ACRE TRACT OF LAND CONVEYED TO FRANCIS LAMB IN VOLUME 535 PAGE 346 IN THE OFFICIAL PUBLIC RECORDS OF WILLIAMSON COUNTY, TEXAS;

THENCE N21°23'23"W FOLLOWING THE COMMON PROPERTY LINE OF THE SAID 12.281 ACRES AND THE SAID 48.933 ACRES FOR A DISTANCE OF 611.66 FEET TO AN IRON ROD SET;

THENCE N69°30'17"E FOR A DISTANCE OF 404.95 FEET TO AN IRON ROD SET FOR AN INTERIOR ELL CORNER OF THE HEREIN DESCRIBED TRACT;

THENCE N21°22'44"W FOR A DISTANCE OF 312.27 FEET TO AN IRON ROD SET AND CONTINUING N20°44'17"W FOR A DISTANCE OF 580.55 FEET TO AN IRON ROD SET FOR THE NORTHWESTERN CORNER OF THE SAID 40.57 ACRES, POINT BEING ON THE SOUTHERN RIGHT OF WAY OF FM 1431;

THENCE N69°29'37"E FOR A DISTANCE OF 170.00 FEET TO AN IRON ROD SET;

THENCE N69°29'37"E FOR A DISTANCE OF 236.86 FEET TO AN IRON ROD SET;

THENCE N69°29'37"E FOR A DISTANCE OF 254.82 FEET TO AN IRON ROD SET;

THENCE N69°29'37"E FOR A DISTANCE OF 218.89 FEET TO AN IRON ROD SET;

THENCE S65°37'47"E FOLLOWING A CURVE TO THE RIGHT HAVING A RADIUS OF 30.00 FEET , A DELTA OF 89°45'00" AND A CHORD DISTANCE OF 42.34 FEET TO AN IRON ROD SET, POINT BEING ON THE SAID WESTERN RIGHT OF WAY OF NORTH VISTA RIDGE BLVD.;

THENCE S20°45'10"E FOR A DISTANCE OF 197.13 FEET TO AN IRON ROD SET

THENCE S20°45'10"E FOR A DISTANCE OF 224.26 FEET TO AN IRON ROD FOUND;

THENCE S24°44'53"E FOLLOWING A CURVE TO THE LEFT HAVING A RADIUS OF 1555.00 FEET, TANGENTS OF 108.61 FEET, ARC OF 216.87 FEET AND A CHORD DISTANCE OF 216.69 FEET TO AN IRON ROD FOUND;

THENCE S28°44'10"E FOR A DISTANCE OF 39.78 FEET TO AN IRON ROD SET;

THENCE S28°44'10"E FOR A DISTANCE OF 198.58 FEET TO AN IRON ROD SET;

THENCE S28°44'10"E FOR A DISTANCE OF 135.82 FEET TO AN IRON ROD SET;

THENCE S28°44'10"E FOR A DISTANCE OF 100.82 FEET TO AN IRON ROD SET;

THENCE S28°44'10"E FOR A DISTANCE OF 151.92 FEET TO AN IRON ROD FOUND;

THENCE S17°18'38"E FOLLOWING A CURVE TO THE RIGHT HAVING A RADIUS OF 945.00 FEET, A DELTA OF 21°21'40" AND A CHORD DISTANCE OF 350.28 FEET TO THE POINT OF BEGINNING CONTAINING 40.57 ACRES OF LAND MORE OR LESS.

STATE OF TEXAS:
COUNTY OF WILLIAMSON:
KNOW ALL MEN BY THESE PRESENTS:

I, NANCY RISTER, CLERK OF THE COUNTY COURT OF SAID COUNTY, DO HEREBY CERTIFY THAT THE FOREGOING INSTRUMENT IN WRITING, WITH IT CERTIFICATE OF AUTHENTICATION WAS FILED FOR RECORD IN MY OFFICE, ON THIS THE 26TH DAY OF JUNE, 2009, A.D., AT 1:26 O'CLOCK P.M., AND DULY RECORDED THIS THE 26TH DAY OF JUNE, 2009, A.D. AT 1:28 O'CLOCK P.M., IN THE PLAT RECORDS, OF SAID COURT IN CABINET FF, SLIDES 385 AND 386.

WITNESS MY HAND AND SEAL OF THE COUNTY COURT OF SAID COUNTY, AT MY OFFICE IN GEORGETOWN, TEXAS, THE LAST DATE SHOWN ABOVE WRITTEN.

NANCY RISTER, CLERK, COUNTY COURT, WILLIAMSON COUNTY, TEXAS

BY: DEPUTY WILLIAM WEHLING

COUNTY CLERK WILLIAMSON COUNTY, TEXAS

PHOTOGRAPHIC MYLAR

GENERAL NOTES

1. SIDEWALKS WILL BE INSTALLED ON THE SUBDIVISION SIDE OF RM 1431/E. WHITESTONE BLVD. AND ARE EXISTNG ON NORTH VISTA RIDGE BLVD.
2. A FIVE (5) FOOT WIDE PUBLIC UTILITY EASEMENT IS DEDICATED ALONG EACH SIDE LOT LINE FRONT THE FRONT PROPERTY LINE TO THE FRONT BUILDING LINE EXCEPT WHERE A SIDE LOT LINE IS ALSO THE REAR LOT LINE OF AN ADJACENT LOT IN WHICH CASE THE 5 FOOT WIDE PUBLIC UTILITY EASEMENT IS DEDICATED ALONG THE ENTIRE LENGTH OF THE SIDE LOT LINE. A SEVEN AND ONE HALF (7.5) FOOT WIDE PUBLIC UTILITY EASEMENT IS DEDICATED ADJACENT TO ALL REAR LOT LINES, AS STATED ON THE PLAT RECORDED IN CAB T SLIDE 283 OF THE PLAT RECORDS OF WILLIAMSON COUNTY, TEXAS.
3. THIS PLAT SHALL BE DEVELOPED IN COMPLAINCE WITH THE SILVERADO MASTER PARK PLAN, DOCUMENT NO. 2001073236.
4. PEAK HOUR TRIP PAYMENTS PER ACCEPTED TRAFFIC IMPACT STUDY FINAL REPORT FOR THE SILVERADO MASTER PLANNED COMMUNITY REVISED AUGUST 30, 2001, SHALL BE MADE TO THE CITY OF CEDAR PARK PRIOR TO BUILDING PERMIT ISSUANCE.

PUBLIC WORKS DEPARTMENT
STANDARD PLAT NOTES

1. CONSTRUCTION PLANS AND SPECIFICATIONS FOR ALL SUBDIVISION IMPROVEMENTS SHALL BE REVIEWED AND APPROVED BY THE CITY OF CEDAR PARK PRIOR TO ANY CONSTRUCTION WITHIN THE SUBDIVISION.
2. ALL SUBDIVISION CONSTRUCTION SHALL CONFORM TO THE CITY OF CEDAR PARK CODE OF ORDINANCES, CONSTRUCTION STANDARDS, AND GENERALLY ACCEPTED ENGINEERING PRACTICES.
3. ON-SITE STORM WATER DETENTION FACILITIES WILL BE PROVIDED TO REDUCE POST-DEVELOPMENT PEAK RATES OF DISCHARGE OF THE 2, 10, 25 AND 100-YR. STORM EVENTS.
4. THE OWNER OF THIS SUBDIVISION, AND HIS OR HER SUCCESSORS AND ASSIGNS, ASSUMES RESPONSIBILITY FOR PLANS FOR CONSTRUCTION OF SUBDIVISION IMPROVEMENTS WHICH COMPLY WITH APPLICABLE CODES AND REQUIREMENTS OF THE CITY OF CEDAR PARK. THE OWNER UNDERSTANDS AND ACKNOWLEDGES THAT PLAT VACATION OR REPLATTING MAY BE REQUIRED, AT THE OWNER'S SOLE EXPENSE, IF PLANS TO CONSTRUCT THIS SUBDIVISION DO NOT COMPLY WITH SUCH CODES AND REQUIREMENTS.
5. NO LOT IN THIS SUBDIVISION SHALL BE OCCUPIED UNTIL CONNECTED TO THE CITY OF CEDAR PARK WATER DISTRIBUTION AND WASTEWATER COLLECTION FACILITIES.
6. THIS SUBDIVISION PLAT WAS APPROVED AND RECORDED BEFORE THE CONSTRUCTION AND ACCEPTANCE OF STREETS AND/OR OTHER SUBDIVISION IMPROVEMENTS. THE OWNER OF THIS SUBDIVISION AND HIS OR HER SUCCESSORS AND ASSIGNS, ARE RESPONSIBLE FOR THE CONSTRUCTION OF ALL STREETS, WATER SYSTEMS, WASTEWATER SYSTEMS, AND OTHER FACILITIES NECESSARY TO SERVE THE LOTS WITHIN THE SUBDIVISION.
7. SITE DEVELOPMENT CONSTRUCTION PLANS SHALL BE REVIEWED AND APPROVED BY THE CITY OF CEDAR PARK PRIOR TO ANY CONSTRUCTION.
8. WASTEWATER AND WATER SYSTEMS SHALL CONFORM TO TCEQ (TEXAS COMMISSION ON ENVIRONMENTAL QUALITY) AND STATE BOARD OF INSURANCE REQUIREMENTS. THE OWNER UNDERSTANDS AND ACKNOWLEDGES THE PLAT VACATION OR RE-PLATTING MAY BE REQUIRED, AT THE OWNER'S SOLE EXPENSE, IF PLANS TO DEVELOP THIS SUBDIVISION DO NOT COMPLY WITH SUCH CODES AND REQUIREMENTS.
9. NO BUILDINGS, FENCES, LANDSCAPING OR OTHER STRUCTURES ARE PERMITTED WITHIN DRAINAGE EASEMENTS SHOWN, EXCEPT AS APPROVED BY THE CITY OF CEDAR PARK PUBLIC WORKS DEPARTMENT.
10. PROPERTY OWNER SHALL PROVIDE FOR ACCESS TO DRAINAGE EASEMENTS AS MAY BE NECESSARY AND SHALL NOT PROHIBIT ACCESS BY CITY OF CEDAR PARK.
11. ALL EASEMENTS ON PRIVATE PROPERTY SHALL BE MAINTAINED BY THE PROPERTY OWNER OR HIS OR HER ASSIGNS.
12. FISCAL SURETY FOR SUBDIVISION CONSTRUCTION, IN A FORM ACCEPTABLE TO THE CITY OF CEDAR PARK, SHALL BE PROVIDED PRIOR TO PLAT APPROVAL BY THE PLANNING AND ZONING COMMISSION.
13. IN ADDITION TO THE EASEMENT SHOWN HEREON, A TEN (10) FOOT WIDE PUBLIC UTILITY EASEMENT (P.U.E.) IS HEREBY DEDICATED ADJACENT TO STREET ROW ON ALL LOTS. A FIVE (5) FOOT WIDE P.U.E. IS HEREBY DEDICATED ALONG EACH SIDE LOT LINE. A SEVEN AND ONE HALF (7 ½) FOOT WIDE P.U.E. IS HEREBY DEDICATED ADJACENT TO ALL REAR LOT LINES.
14. COMMUNITY IMPACT FEES FOR INDIVIDUAL LOTS TO BE PAID PRIOR TO ISSUANCE OF ANY BUILDING PERMITS.
15. DEVELOPER SHALL BE RESPONSIBLE FOR ALL RELOCATION AND MODIFICATIONS TO EXISTING UTILITIES.
16. A PORTION OF THIS TRACT IS WITHIN A FLOOD HAZARD AREA AS SHOWN ON THE FLOOD INSURANCE RATE MAP PANEL #48491C0470E FOR WILLIAMSON CO., EFFECTIVE SEPTEMBER 26, 2008.
17. TEMPORARY AND PERMANENT EASEMENTS TO BE PROVIDED AS REQUIRED FOR OFF-SITE WATER, WASTEWATER AND DRAINAGE IMPROVEMENTS.
18. DRIVEWAYS ARE TO BE LOCATED NO CLOSER TO THE CORNER OF INTERSECTING RIGHTS OF WAY THAN 60 PERCENT OF PARCEL FRONTAGE OR 100 FEET, WHICHEVER IS LESS.
19. THIS SITE IS LOCATED WITHIN THE EDWARDS AQUIFER CONTRIBUTING ZONE. DEVELOPMENT OF THIS SITE WILL COMPLY WITH ALL APPLICABLE TCEQ EDWARDS AQUIFER RULES.
20. PRIOR TO SUBDIVISION/SITE PLAN APPROVAL, THE ENGINEER SHALL SUBMIT TO THE CITY OF CEDAR PARK (COCP) DOCUMENTATION OF SUBDIVISION/SITE REGISTRATION WITH THE TEXAS DEPARTMENT OF LICENSING AND REGULATIONS (TDLR) AND PROVIDE DOCUMENTATION OF REVIEW AND COMPLIANCE OF THE SUBDIVISION CONSTRUCTION PLANS WITH TEXAS ARCHITECTURAL BARRIERS ACT (TABA).
21. EROSION CONTROLS ARE REQUIRED FOR ALL DEVELOPMENT, TO THE STANDARDS OF THE CITY OF CEDAR PARK.
22. BUILDING SETBACKS NOT SHOWN ON THIS PLAT SHALL CONFORM TO THE CITY OF CEDAR PARK ZONING ORDINANCE.
23. THIS SUBDIVISION IS REQUIRED TO COMFORM TO THE LANDSCAPE AND TREE ORDINANCE OF THE CITY OF CEDAR PARK, TEXAS.
24. AN APPROVED PROTECTED TREE REMOVAL APPLICATION WILL BE OBTAINED FROM THE CITY OF CEDAR PARK PLANNING DEPARTMENT BEFORE ANY TREE IS REMOVED FROM THE DEVELOPMENT SITE WHICH MEETS THE PROTECTED TREE DEFINITION AS PROVIDED IN THE TREE AND LANDSCAPE ORDINANCE OF TH CITY OF CEDAR PARK, TEXAS.

OWNER: CAROLVILLE, LTD.
ADDRESS: 13809 RESEARCH SUITE 1000
AUSTIN, TX 78750
PHONE: 512-355-5577 FAX:

ACREAGE: 40.57 ACRES
SURVEY: SAMUEL DAYMON SURVEY, ABSTRACT NO. 170
NUMBER OF LOTS AND PROPOSED USE (IF MORE THAN ONE USE IS PLANNED FOR THE LOTS, PROVIDE LAND USE SUMMARY SHOWING # OF LOTS ARE PLANNED FOR EACH USE):
11 LOTS
LINEAR FEET OF STREETS: 0
SURVEYOR: 3DS LAND SURVEYORS - STEVE WOMACK (SURVEYOR)
PHONE: (512) 515-5888 FAX: (512) 515-5878
ENGINEER: ROBERT L. KOSTER
PHONE: 331-7477 FAX:

STATE OF TEXAS
THE COUNTY OF WILLIAMSON
KNOW ALL MEN BY THESE PRESENTS:

THAT CAROLVILLE, LTD., BEING THE OWNER OF 40.57 ACRES OUT OF AND A PORTION OF THAT 139.53 ACRE TRACT CONVEYED TO CAROLVILLE LTD. RECORDED IN V1918 P196, IN WILLIAMSON COUNTY, TEXAS, DO HEREBY SUBDIVIDE SAID 40.57 ACRES, IN ACCORDANCE WITH THE ATTACHED MAP OR PLAT, TO BE KNOWN AS THE SHOPS AT VISTA RIDGE SUBDIVISION. PURSUANT TO CHAPTER 9 OF THE CEDAR PARK CODE AND CHAPTER 212.014, TEXAS LOCAL GOVERNMENT CODE, AND DOES HEREBY JOIN, APPROVE, AND CONSENT TO ALL DEDICATIONS AND PLAT NOTE REQUIREMENTS SHOWN HEREON, AND DOES HEREBY APPROVE THE RECORDATION OF THIS SUBDIVISION PLAT AND DEDICATE TO THE PUBLIC USE FOREVER AND ALL EASEMENTS, STREETS AND ROADS THAT ARE SHOWN HEREON, SUBJECT TO ANY EASEMENTS, AND/OR RESTRICTIONS HERETOFORE GRANTED AND NOT RELEASED, I HEREBY ACKNOWLEDGE THAT CAROLVILLE LTD., IS THE SOLE OWNER OF THIS PROPERTY AND DO HEREBY STATE THAT THERE ARE NO LEINHOLDERS OR ANY UNPAID DEBT FOR WHICH THIS PROPERTY REPRESENTS COLLATERAL ON ANY LOAN.

WITNESS MY HAND THIS THE 26th DAY OF May, 2009.

WILLIAM B. POHL
BY: W. B. Pohl
WILLIAM B. POHL

THE STATE OF TEXAS
THE COUNTY OF ~~WILLIAMSON~~ Travis

BEFORE ME, THE UNDERSIGNED AUTHORITY, ON THIS DAY PERSONALLY APPEARED WILLIAM B. POHL, KNOWN TO ME TO BE THE PERSON WHOSE NAME IS SUBSCRIBED TO THE FOREGOING INSTRUMENT, AND ACKNOWLEDGED TO ME THAT HE EXECUTED THE SAME FOR THE PURPOSES AND CONSIDERATION THEREIN EXPRESSED AND IN THE CAPACITY THEREIN STATED.

WITNESS MY HAND AND SEAL THIS THE 26th DAY OF May, 2009.

Gina M Tingley
NOTARY PUBLIC IN AND FOR
THE STATE OF TEXAS

GINA M. TINGLEY
MY COMMISSION EXPIRES
December 12, 2009

APPROVED THIS THE 16th DAY OF June, 2009, A.D. BY THE CITY PLANNING AND ZONING COMMISSION OF THE CITY OF CEDAR PARK, TEXAS, AND AUTHORIZED TO BE FILED FOR RECORD BY THE COUNTY CLERK OF WILLIAMSON COUNTY, TEXAS

Bobbie Fuller
BOBBIE FULLER, CHAIR
PLANNING AND ZONING COMMISSION
CITY OF CEDAR PARK

ANTHONY DALE, SECRETARY
PLANNING AND ZONING COMMISSION
CITY OF CEDAR PARK

I, DUANE SMITH, DIRECTOR OF PLANNING OF THE CITY OF CEDAR PARK, TEXAS DO HEREBY ATTEST AND AUTHORIZE THIS PLAT TO BE FILED FOR RECORD BY THE COUNTY CLERK OF WILLIAMSON COUNTY, TEXAS IN THE PLAT RECORDS OF SAID COUNTY.

ATTEST: Duane Smith DATE: June 18, 2009
DUANE SMITH, DIRECTOR OF PLANNING
CITY OF CEDAR PARK

Texas Society of Professional Surveyors MEMBER

3DS, Inc.
Land Surveyors
GPS Services
Subdivisions • Topographic
Construction • Commercial • Boundaries
3DS Three Dimensional Services
P.O. Box 850
Liberty Hill, Texas 78642
(512) 515-5888
Fax 515-5878

The Shops at Vista Ridge

Scale: 1"= 100' Date: 5-21-2009
Field Book: Disk:
Drawn by: CORY THORNHILL
File Name: 08-073PLAT1.DWG
Approved by:
08-073 S.W.

SHEET 2 OF 2

M&S ENGINEERING
ELECTRICAL | CIVIL | STRUCTURAL | MEP
TXENG FIRM # F-13394 | TBPELS FIRM #10169800
WWW.MSENGR.COM | (830) 228-5446

STATE OF TEXAS
JENNIFER L. HENDERSON
116883
LICENSED
PROFESSIONAL ENGINEER
09/18/2020

LAVISH SALON AND BOUTIQUE
901 N. VISTA RIDGE BLVD.
CEDAR PARK, TEXAS

PLAT

JOB:8120ADAYA.005
DATE: 18/09/2020

DRAWN:	AR	PM:	JH
DESIGN:	AR	DM:	JH
PEER:	JS	OTHER:	

REVISIONS:

DELTA	DESCRIPTION	DATE

SHEET:
07 OF 40

CITY PROJECT NUMBER: _____

Date: Sep 18, 2020, 12:21pm User ID: amelly
File: T:\active projects\2020\93 georgetown general civil\8120adaya.005 - lavish salon and boutique\dwg\Sheets\8120ADAYA.005-PLAT.dwg

Unofficial Document

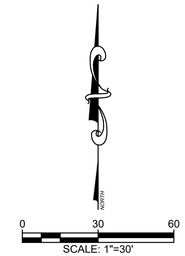

PARKING DATA TABLE		
ZONING	GB (GENERAL BUSINESS)	
	USE TYPE	SPACES PER S.F.
USE 1	PERSONAL SERVICE	200
USE 2	OFFICE	300

PARKING REQUIREMENTS		
	BUILDING AREA	REQ. SPACES
USE 1	3,600 S.F.	18
USE 2	1,726 S.F.	6
TOTAL	5,326 S.F.	24
STANDARD SPACES PROVIDED		23
ADA SPACES REQUIRED		1
ADA SPACES PROVIDED		1
TOTAL SPACES PROVIDED		24

BICYCLE PARKING REQUIREMENTS	
BIKE PARKING REQUIRED	3
BIKE PARKING PROVIDED	4

LEGEND

- (#) PARKING BAY COUNT
- LIMITS OF ON THE GROUND SURVEY
- LOC LIMITS OF CONSTRUCTION (1.603 ACRES)
- ADA ACCESSIBLE ROUTE

NOTES:

1. ALL KNOWN EXISTING EASEMENTS ARE SHOWN.
2. LIGHT SOURCES SHALL BE COMPLETELY CONCEALED WITHIN OPAQUE HOUSINGS AND SHALL NOT BE VISIBLE FROM ADJACENT STREETS OR PROPERTIES. ALL EXTERIOR LIGHTING FIXTURES SHALL BE FULL CUT-OFF TYPE FIXTURES. LIGHTING FIXTURES SHALL BE NO MORE THAN TWENTY-FIVE (25) FEET IN HEIGHT AS MEASURED FROM ADJACENT, FINISHED GRADE. LIGHTING FIXTURES LOCATED WITHIN FIFTY (50) FEET OF ANY RESIDENTIAL USE SHALL NOT EXCEED FIFTEEN (15) FEET IN HEIGHT.
3. REFER TO SHEET 40 FOR PHOTOMETRIC DESIGN OF LIGHT POLES.
4. ALL DRY UTILITIES SHALL BE INSTALLED UNDERGROUND.
5. THERE IS NO 100-YEAR FLOODPLAIN ON THIS PROPERTY.

M&S ENGINEERING
ELECTRICAL | CIVIL | STRUCTURAL | MEP
TXENG FIRM # F-1394 | TBPELS FIRM #10169800
WWW.MSENGR.COM | (830) 228-5446

STATE OF TEXAS
JENNIFER L. HENDERSON
116883
LICENSED
PROFESSIONAL ENGINEER
09/18/2020

LAVISH SALON AND BOUTIQUE
901 N. VISTA RIDGE BLVD.
CEDAR PARK, TEXAS

SITE PLAN

JOB:8120ADAYA.005			
DATE: 18/09/2020			
DRAWN:	AR	PM:	JH
DESIGN:	AR	DM:	JH
PEER:	JS	OTHER:	

REVISIONS:

DELTA	DESCRIPTION	DATE

SHEET:

08 OF 40

CITY PROJECT NUMBER: _____

Date: Sep 18, 2020, 12:21pm User ID: anelly
File: T:\active projects\8120ada\01 geographical\civil\8120adaya.005 - lavish salon and boutique\dwg\dwg\Sheets\8120ADAYA.005-SITE PLAN.dwg

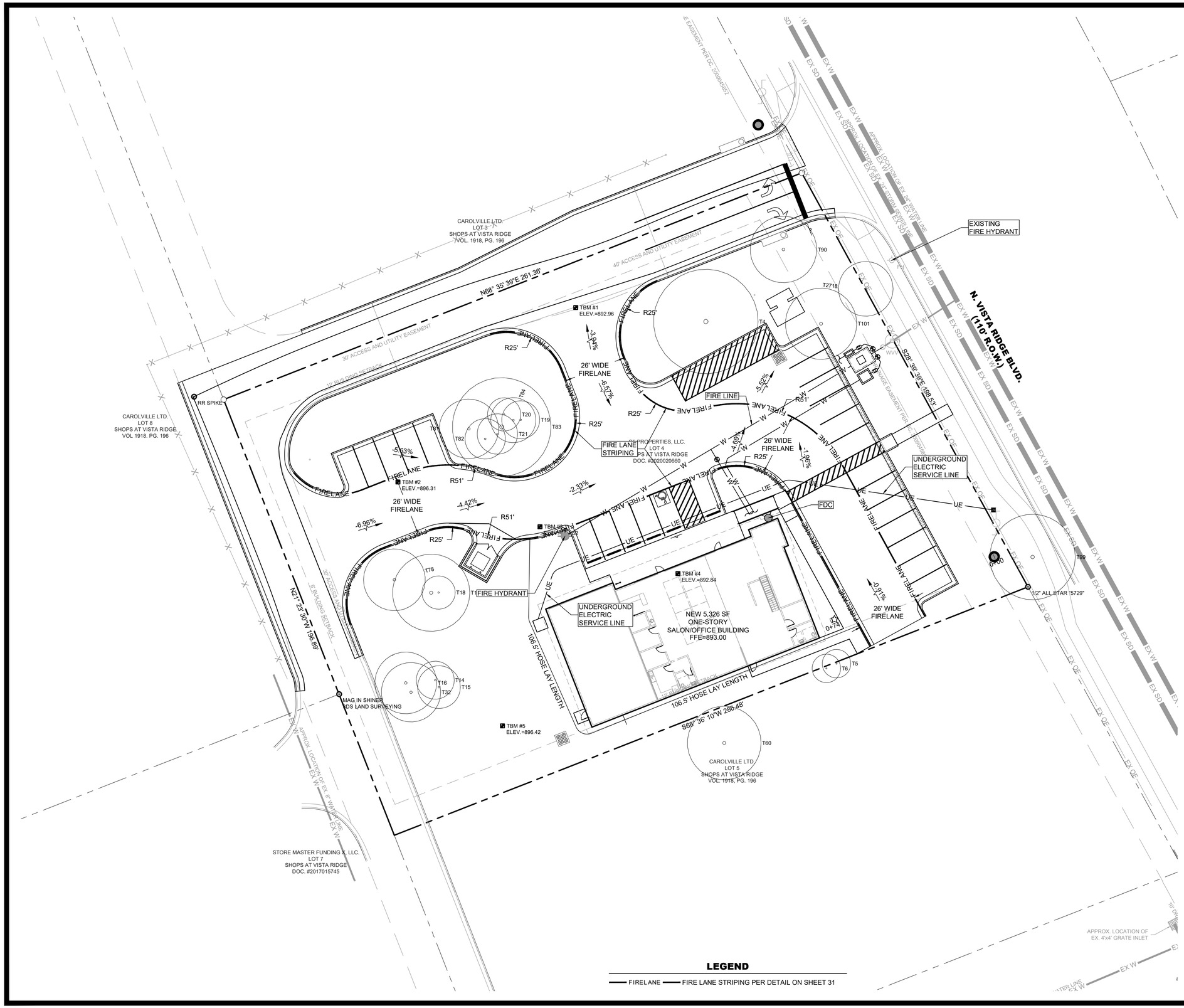

LEGEND

FIRELANE — FIRE LANE STRIPING PER DETAIL ON SHEET 31

0 20 40
SCALE: 1"=20'

NOTES:

1. FIRE APPARATUS ACCESS ROADS SHALL:
   - 1.A. HAVE AN INSIDE RADIUS OF 25 FEET THROUGHOUT THE TURNING MOVEMENT, AND AN OUTSIDE RADIUS OF 50 FEET; ALL RADII LABELED ON PLANS;
   - 1.B. BE INSTALLED SUCH THAT NO DEAD-END STRETCH IS GREATER THAN 150 FEET IN LENGTH WITHOUT AN APPROVED AREA FOR TURNING AROUND FIRE APPARATUS;
   - 1.C. HAVE A MINIMUM INSIDE RADIUS OF 28 FEET FOR ALL TURNAROUNDS;
   - 1.D. HAVE AN UNOBSTRUCTED WIDTH OF NOT LESS THAN 20 FEET; 26 FEET REQUIRED WHEN HYDRANTS ARE PRESENT ALONG THE FIRE APPARATUS ACCESS ROAD OR FOR AERIAL APPARATUS ACCESS ROADS;
   - 1.E. IF LONGER THAN 500 FEET, HAVE AN UNOBSTRUCTED WIDTH OF NOT LESS THAN 26 FEET;
   - 1.F. HAVE AN UNOBSTRUCTED VERTICAL CLEARANCE OF NOT LESS THAN 13 FEET 6 INCHES; AERIAL APPARATUS ACCESS ROADS SHALL HAVE NO VERTICAL OVERHANGS;
   - 1.G. SHALL HAVE A GRADE WITHIN THE LIMITS ESTABLISHED BY THE FIRE CODE OFFICIAL BASED ON THE CEDAR PARK FIRE DEPARTMENT'S APPARATUS.
     - 1.G.1. CURRENTLY, CEDAR PARK REQUIRES THAT NO GRADE SHALL BE STEEPER THAN 12%; NO ANGLES OF APPROACH OR DEPARTURE SHALL HAVE AN ALGEBRAIC DIFFERENCE OF GREATER THAN 8% WITHIN ANY 50-FOOT LENGTH;
   - 1.H. BE MARKED BY LINES OF RED TRAFFIC PAINT OR DYE A MINIMUM OF 6 INCHES IN WIDTH TO SHOW THE BOUNDARIES OF THE LANE.
     - 1.H.1. THE WORDS "FIRE LANE TOW AWAY ZONE" SHALL APPEAR IN 4 INCH WHITE LETTERS NO GREATER THAN 35 FEET APART.
       - 1.H.1.a. THESE WORDS SHALL BE MARKED WITHIN THE RED STRIPE.
     - 1.H.2. FIRE LANE STRIPING SHALL BE CONTINUOUS THROUGHOUT;
     - 1.H.3. CURB FACING SHALL BE USED WHERE AVAILABLE.
       - 1.H.3.a. WHERE THERE IS NO CURB, LAY DOWN STRIPING SHALL BE USED.
2. FIRE APPARATUS ACCESS ROADS SHALL BE INSTALLED PRIOR TO COMBUSTIBLE MATERIALS ARRIVING ON SITE AND PRIOR TO THE ONSET OF VERTICAL CONSTRUCTION.
3. DURING CONSTRUCTION, FIRE APPARATUS ACCESS ROADS SHALL:
   - 3.A. BE MAINTAINED IN AN EASILY DISTINGUISHABLE CONDITION THROUGHOUT CONSTRUCTION;
   - 3.B. WHERE THIS IS IMPOSSIBLE OR IMPRACTICAL, SIGNS APPROVED BY THE FIRE CODE OFFICIAL MAY BE USED.
     - 3.B.1. ALL CONSTRUCTION VEHICLES AND CONSTRUCTION WORKER VEHICLES MUST BE PARKED ON SITE;
     - 3.B.2. NO VEHICLE SHALL BE ALLOWED TO PARK OR STOP IN THE FIRE APPARATUS ACCESS ROADS, WHETHER OCCUPIED OR UNOCCUPIED.
4. A MINIMUM THREE FEET (3') OF CLEAR SPACE SHALL BE MAINTAINED AROUND THE CIRCUMFERENCE OF THE HYDRANT, AND GROUND SHALL PROVIDE LEVEL FOOTING FOR OPERATION OF HYDRANT.
5. A BLUE REFLECTOR SHALL BE MOUNTED IN THE CENTER OF THE ADJACENT FIRE LANE TO MARK HYDRANT LOCATION.
6. WHERE FIRE HYDRANTS ARE SUBJECT TO IMPACT BY A MOTOR VEHICLE, GUARD POSTS SHALL BE CONSTRUCTED AS SET FORTH IN IFC SECTION 312 AND COMPLY WITH THE FOLLOWING REQUIREMENTS:
   - 6.A. CONSTRUCTED OF STEEL NOT LESS THAN 4 INCHES IN DIAMETER, FILLED COMPLETELY WITH CONCRETE;
   - 6.B. SPACED NOT MORE THAN 4 FEET ON CENTER BETWEEN POSTS;
   - 6.C. SET NOT LESS THAN 3 FEET DEEP IN A CONCRETE FOOTING OF NOT LESS THAN 15 INCHES IN DIAMETER;
   - 6.D. SET WITH THE TOP OF THE POSTS NOT LESS THAN 3 FEET ABOVE GRADE;
   - 6.E. LOCATED NOT LESS THAN 3 FEET FROM THE PROTECTED OBJECT.
7. FIRE DEPARTMENT CONNECTIONS MUST
   - 7.A. BE INSTALLED ON THE FRONT OF THE BUILDING,
     - 7.A.1. IN A LOCATION THAT IS READILY VISIBLE FROM THE APPROVED FIRE APPARATUS ACCESS ROAD.
   - 7.B. HAVE A MINIMUM OF 36 INCHES OF CLEAR SPACE MAINTAINED AROUND THE CIRCUMFERENCE OF THE FDC;
   - 7.C. HAVE A FIRE HYDRANT WITHIN 100 FEET OF THE FDC AND BE LOCATED IN SUCH A WAY THAT THE CONNECTION DOES NOT OBSTRUCT THE FIRE APPARATUS ACCESS ROAD FOR OTHER ARRIVING FIRE APPARATUS;
   - 7.D. NOT BE BLOCKED FROM VIEW OR USE BY:
     - 7.D.1. STRUCTURAL MEMBERS;
     - 7.D.2. PARKING SPACES;
     - 7.D.3. TREES;
     - 7.D.4. LANDSCAPING, ETC.
   - 7.E. A WHITE REFLECTOR IS REQUIRED TO BE MOUNTED IN THE CENTER OF THE ADJACENT DRIVE TO MARK THE FDC LOCATION.
8. FLAMMABLE AND COMBUSTIBLE LIQUID STORAGE AREAS SHALL
   - 8.A. BE MAINTAINED CLEAR OF COMBUSTIBLE VEGETATION AND WASTE MATERIALS;
   - 8.B. NOT BE USED FOR THE STORAGE OF OTHER COMBUSTIBLE MATERIALS.
9. COMBUSTIBLE DEBRIS, RUBBISH, AND WASTE MATERIAL SHALL
   - 9.A. NOT BE ALLOWED TO ACCUMULATE WITHIN BUILDINGS;
   - 9.B. BE REMOVED FROM BUILDINGS AT THE END OF EACH SHIFT OR WORK DAY;
   - 9.C. NOT BE DISPOSED OF BY BURNING ON SITE.

M&S ENGINEERING
ELECTRICAL | CIVIL | STRUCTURAL | MEP
TXENG FIRM # F-1394 | TBPELS FIRM #10169800
WWW.MSENGR.COM | (830) 228-5446

STATE OF TEXAS
JENNIFER L. HENDERSON
116883
LICENSED
PROFESSIONAL ENGINEER
09/18/2020

LAVISH SALON AND BOUTIQUE
901 N. VISTA RIDGE BLVD.
CEDAR PARK, TEXAS

FIRE PROTECTION PLAN

JOB:8120ADAYA.005			
DATE: 18/09/2020			
DRAWN:	AR	PM:	JH
DESIGN:	AR	DM:	JH
PEER:	JS	OTHER:	

REVISIONS:

DELTA	DESCRIPTION	DATE

SHEET:

09 OF 40

CITY PROJECT NUMBER: _____

Date: Sep 18, 2020, 12:21pm User ID: anelly
File: Y:\active projects\8120ADAYA - georgetown general civil\8120adaya.005 - lavish salon and boutique\dwg\Sheets\8120ADAYA.005-FIRE PROTECTION PLAN.dwg

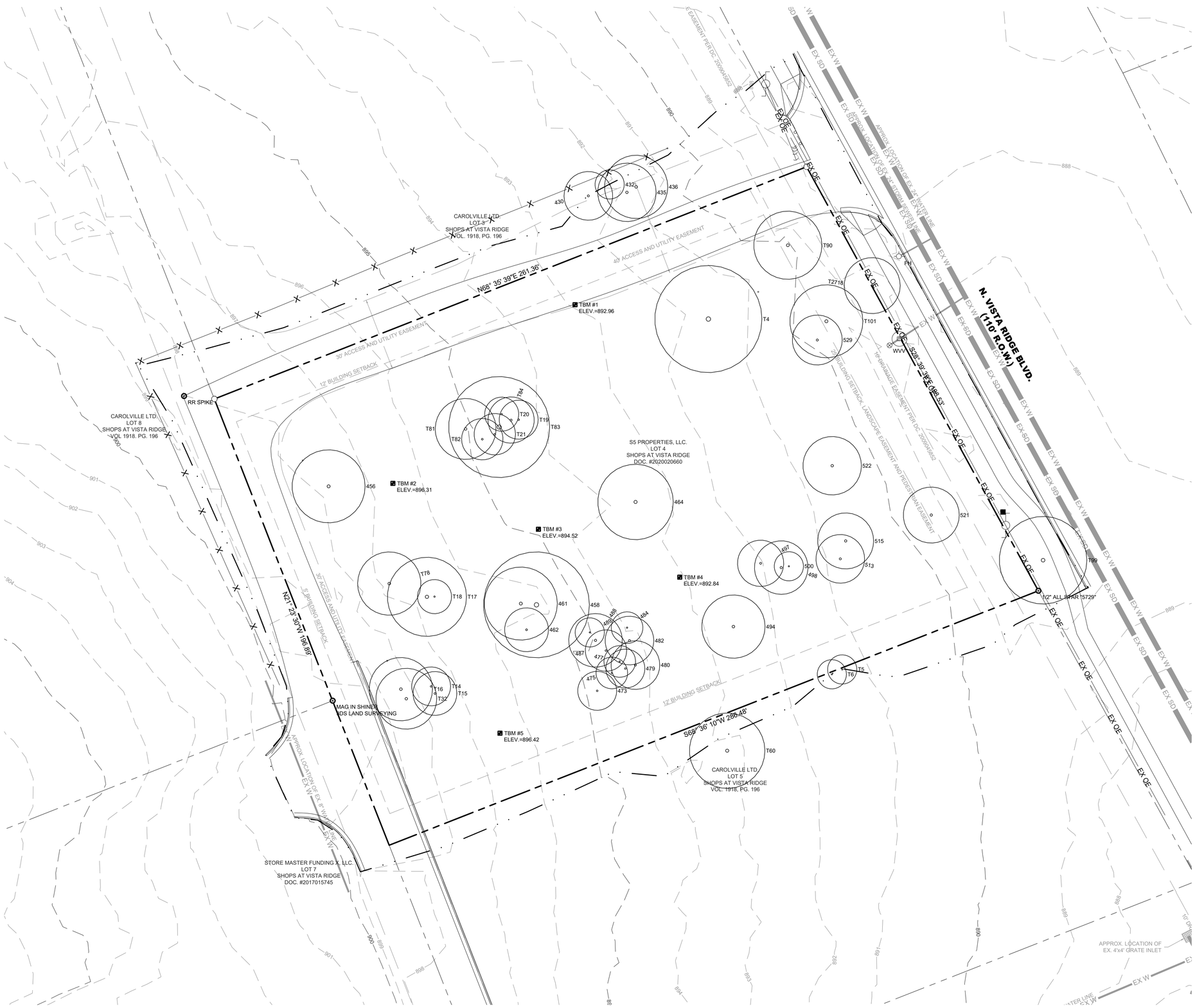

TREE SURVEY				
SURVEY #	TAG #	SPECIES	CALIPERS	REMARKS
430	T95	LIVE OAK	10"	OFF-SITE
432	T1	LIVE OAK	6"	OFF-SITE
435	T96	LIVE OAK	12"	OFF-SITE
436	T97	LIVE OAK	13"	OFF-SITE
440	T90	LIVE OAK	14"	
442	T4	LIVE OAK	16", 12"	PROTECTED
444	T20	LIVE OAK	7"	
446	T84	LIVE OAK	9.5"	
448	T19	LIVE OAK	8"	
449	T83	LIVE OAK	11", 10.5", 9"	
450	T21	LIVE OAK	8.5"	
452	T82	LIVE OAK	8.5"	
454	T81	LIVE OAK	12.5"	
456	T28	LIVE OAK	15"	
458	T74	LIVE OAK	15", 13.5"	
461	T75	LIVE OAK	15"	
462	T13	LIVE OAK	9"	
464	T73	LIVE OAK	15.5"	
467	T17	LIVE OAK	11", 10.5"	
468	T18	LIVE OAK	7"	
469	T78	LIVE OAK	13"	
471	T15	LIVE OAK	9"	
472	T14	LIVE OAK	8"	
473	T7	LIVE OAK	8"	
475	T8	LIVE OAK	6"	
477	T9	LIVE OAK	6"	
479	T62	LIVE OAK	8"	
480	T61	LIVE OAK	10"	
482	T64	LIVE OAK	10"	
484	T10	LIVE OAK	6"	
487	T65	LIVE OAK	8.5"	
488	T66	LIVE OAK	11"	
489	T11	LIVE OAK	6"	
490	T16	LIVE OAK	9.5", 7"	
492	T32	LIVE OAK	12.5"	
494	T67	LIVE OAK	13"	
497	T68	LIVE OAK	9.5"	
498	T69	LIVE OAK	11"	
500	T12	LIVE OAK	6"	
501	T60	LIVE OAK	10.5", 10"	OFF-SITE
509	T5	LIVE OAK	6"	OFF-SITE
511	T6	LIVE OAK	6"	OFF-SITE
513	T70	LIVE OAK	10"	
515	T71	LIVE OAK	11.5"	
516	T99	LIVE OAK	18"	PROTECTED, OFF-SITE
521	T3	LIVE OAK	11.5"	
522	T72	LIVE OAK	12"	
525	T2718	LIVE OAK	11.5"	
527	T101	LIVE OAK	15"	
529	T2	LIVE OAK	8", 4.5"	

LEGEND

— · · — LIMITS OF ON THE GROUND SURVEY

M&S ENGINEERING
ELECTRICAL | CIVIL | STRUCTURAL | MEP
TXENG FIRM # F-1394 | TBPELS FIRM #10169800
WWW.MSENGR.COM | (830) 228-5446

STATE OF TEXAS
JENNIFER L. HENDERSON
116883
LICENSED
PROFESSIONAL ENGINEER
09/18/2020

LAVISH SALON AND BOUTIQUE
901 N. VISTA RIDGE BLVD.
CEDAR PARK, TEXAS

EXISTING CONDITIONS

JOB:8120ADAYA.005
DATE: 18/09/2020

DRAWN:	AR	PM:	JH
DESIGN:	AR	DM:	JH
PEER:	JS	OTHER:	

REVISIONS:

DELTA	DESCRIPTION	DATE

SHEET:

10 OF 40

CITY PROJECT NUMBER: _____

Date: Sep 18, 2020, 12:22pm User ID: arrolly
File: T:\acad\projects\8120\83 george\civil\8120adaya.005 - lavish salon and boutique\dwg\Sheets\8120ADAYA.005-EXISTING CONDITIONS PLAN.dwg

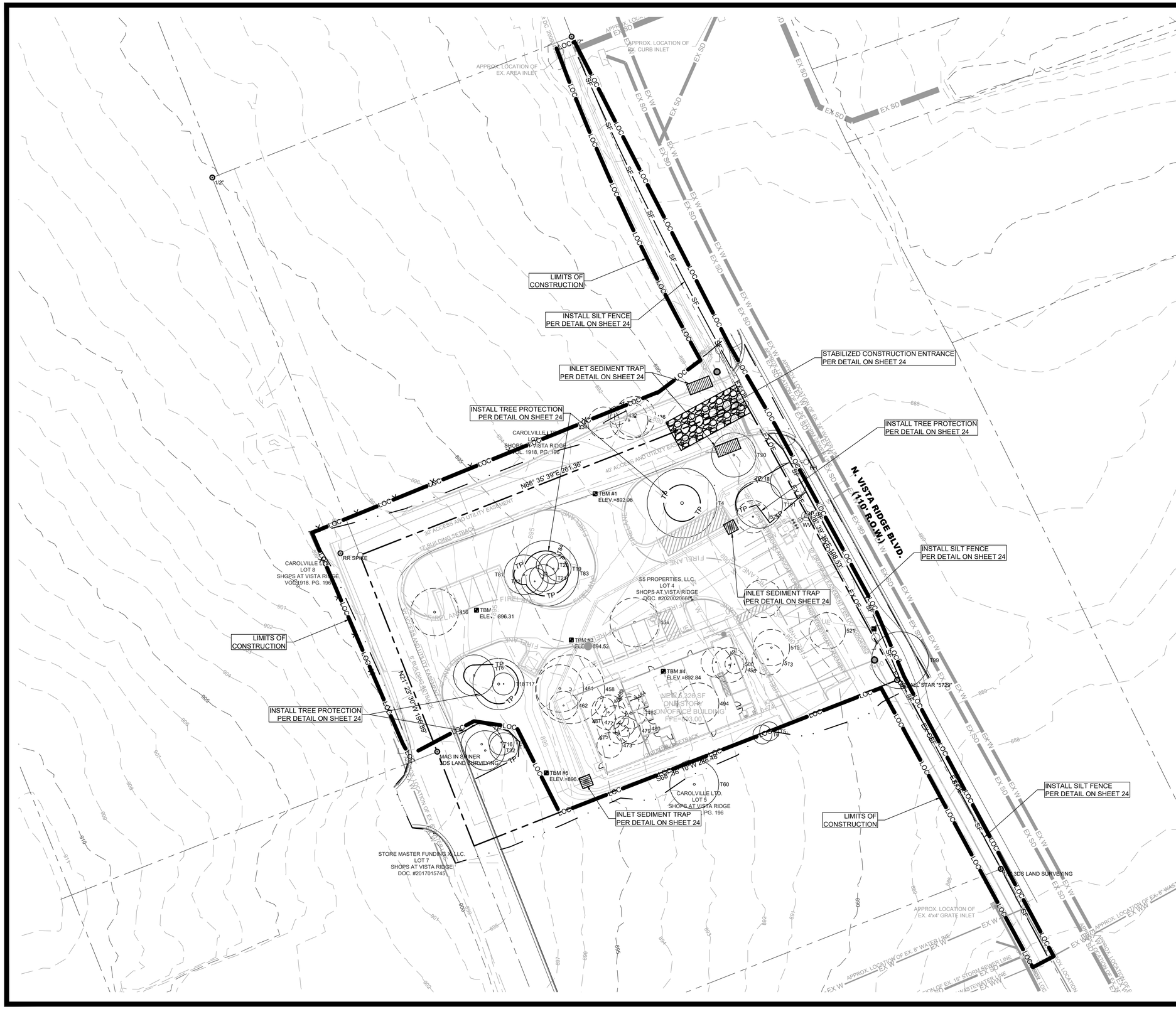

0 30 60
SCALE: 1"=30'

LEGEND

- LIMITS OF ON THE GROUND SURVEY
- LOC — LIMITS OF CONSTRUCTION (1.603 ACRES)
- ROCK BERM
- SF — SILT FENCE
- TP — TREE PROTECTION
- CF — CONSTRUCTION FENCE
- IP — INLET PROTECTION

NOTES:

1. ALL DISTURBED AREAS SHALL BE RE-VEGETATED TO MEET THE REQUIREMENTS OF THE CITY OF CEDAR PARK'S ORDINANCES.
2. ADDITIONAL EROSION CONTROL MEASURES MAY BE REQUIRED BY INSPECTOR AT TIME OF CONSTRUCTION.
3. CONTRACTOR TO PROTECT EXISTING STORM DRAINAGE FEATURES FOR EXISTING INFRASTRUCTURE.

M&S ENGINEERING
ELECTRICAL | CIVIL | STRUCTURAL | MEP
TXENG FIRM # F-1394 | TBPELS FIRM #10169800
WWW.MSENGR.COM | (830) 228-5446

STATE OF TEXAS
JENNIFER L. HENDERSON
116883
LICENSED
PROFESSIONAL ENGINEER
09/18/2020

LAVISH SALON AND BOUTIQUE
901 N. VISTA RIDGE BLVD.
CEDAR PARK, TEXAS

EROSION AND SEDIMENTATION CONTROL PLAN

JOB:8120ADAYA.005			
DATE: 18/09/2020			
DRAWN:	AR	PM:	JH
DESIGN:	AR	DM:	JH
PEER:	JS	OTHER:	

REVISIONS:

DELTA	DESCRIPTION	DATE

SHEET:

11 OF 40

CITY PROJECT NUMBER: _____

Date: Sep 18, 2020, 12:22pm User ID: arelly
File: Y:\active projects\8120\8120adaya.005 - lavish salon and boutique\dwg\general civil\8120adaya.005 - lavish salon and boutique\dwg\Sheets\8120ADAYA.005-ESC PLAN.dwg

0 30 60
SCALE: 1"=30'

TREES TO REMOVE				
SURVEY #	TAG #	SPECIES	CALIPERS	REMARKS
430	T95	LIVE OAK	10"	OFF-SITE
432	T1	LIVE OAK	6"	OFF-SITE
435	T96	LIVE OAK	12"	OFF-SITE
436	T97	LIVE OAK	13"	OFF-SITE
456	T28	LIVE OAK	15"	
458	T74	LIVE OAK	15", 13.5"	
461	T75	LIVE OAK	15"	
462	T13	LIVE OAK	9"	
464	T73	LIVE OAK	15.5"	
473	T7	LIVE OAK	8"	
475	T8	LIVE OAK	6"	
477	T9	LIVE OAK	6"	
479	T62	LIVE OAK	8"	
480	T61	LIVE OAK	10"	
482	T64	LIVE OAK	10"	
484	T10	LIVE OAK	6"	
487	T65	LIVE OAK	8.5"	
488	T66	LIVE OAK	11"	
489	T11	LIVE OAK	6"	
494	T67	LIVE OAK	13"	
497	T68	LIVE OAK	9.5"	
498	T69	LIVE OAK	11"	
500	T12	LIVE OAK	6"	
513	T70	LIVE OAK	10"	
515	T71	LIVE OAK	11.5"	
521	T3	LIVE OAK	11.5"	
522	T72	LIVE OAK	12"	
529	T2	LIVE OAK	8", 4.5"	

LEGEND

- LIMITS OF ON THE GROUND SURVEY
- LINEAR FEATURE TO BE REMOVED
- AREA OF PAVEMENT TO BE DEMOLISHED AND REMOVED

M&S ENGINEERING
ELECTRICAL | CIVIL | STRUCTURAL | MEP
TXENG FIRM # F-1394 | TBPELS FIRM #10169800
WWW.MSENGR.COM | (830) 228-5446

STATE OF TEXAS
JENNIFER L. HENDERSON
116883
LICENSED
PROFESSIONAL ENGINEER
09/18/2020

LAVISH SALON AND BOUTIQUE
901 N. VISTA RIDGE BLVD.
CEDAR PARK, TEXAS

DEMOLITION PLAN

JOB:8120ADAYA.005
DATE: 18/09/2020

DRAWN:	AR	PM:	JH
DESIGN:	AR	DM:	JH
PEER:	JS	OTHER:	

REVISIONS:

DELTA	DESCRIPTION	DATE

SHEET:
12 OF 40

CITY PROJECT NUMBER: _____

Date: Sep 18, 2020, 12:22pm User ID: arreilly
File: T:\active projects\8120ada\ya.005 - lavish salon and boutique\dwg\Sheets\8120ADAYA.005-DEMOLITION PLAN.dwg

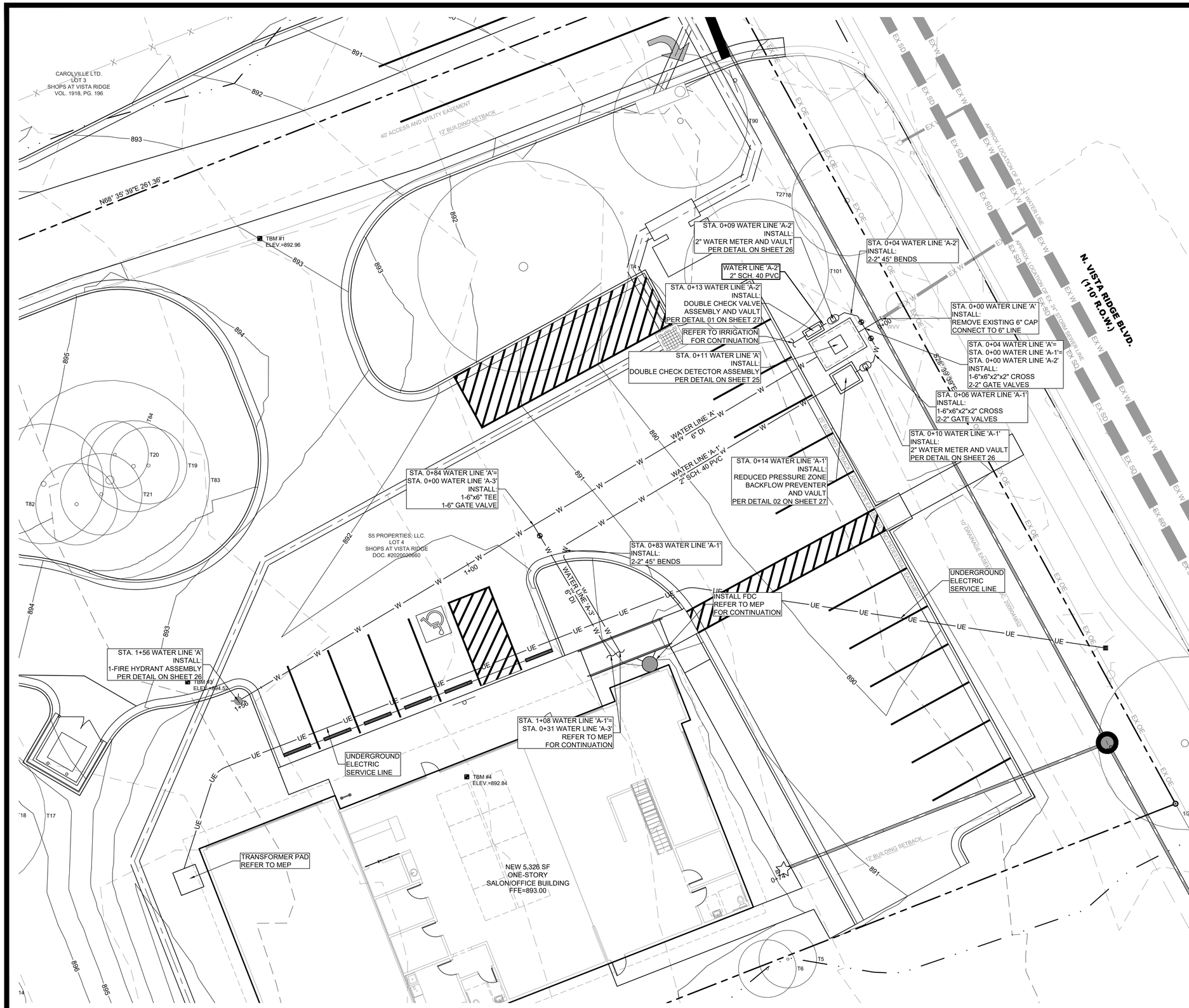

LEGEND

LIMITS OF ON THE GROUND SURVEY

M&S ENGINEERING
ELECTRICAL | CIVIL | STRUCTURAL | MEP
TXENG FIRM # F-1394 | TBPELS FIRM #10169800
WWW.MSENGR.COM | (830) 228-5446

STATE OF TEXAS
JENNIFER L. HENDERSON
116883
LICENSED
PROFESSIONAL ENGINEER
09/18/2020

LAVISH SALON AND BOUTIQUE
901 N. VISTA RIDGE BLVD.
CEDAR PARK, TEXAS

WATER PLAN

JOB:8120ADAYA.005			
DATE: 18/09/2020			
DRAWN:	AR	PM:	JH
DESIGN:	AR	DM:	JH
PEER:	JS	OTHER:	

REVISIONS:

DELTA	DESCRIPTION	DATE

SHEET:

13 OF 40

CITY PROJECT NUMBER: _____

Date: Sep 18, 2020, 12:22pm User ID: anelly
File: T:\active projects\2020\243 georgetown general civil\8120adaya.005 - lavish salon and boutique\dwg\Sheets\8120ADAYA.005-WATER PLAN.dwg

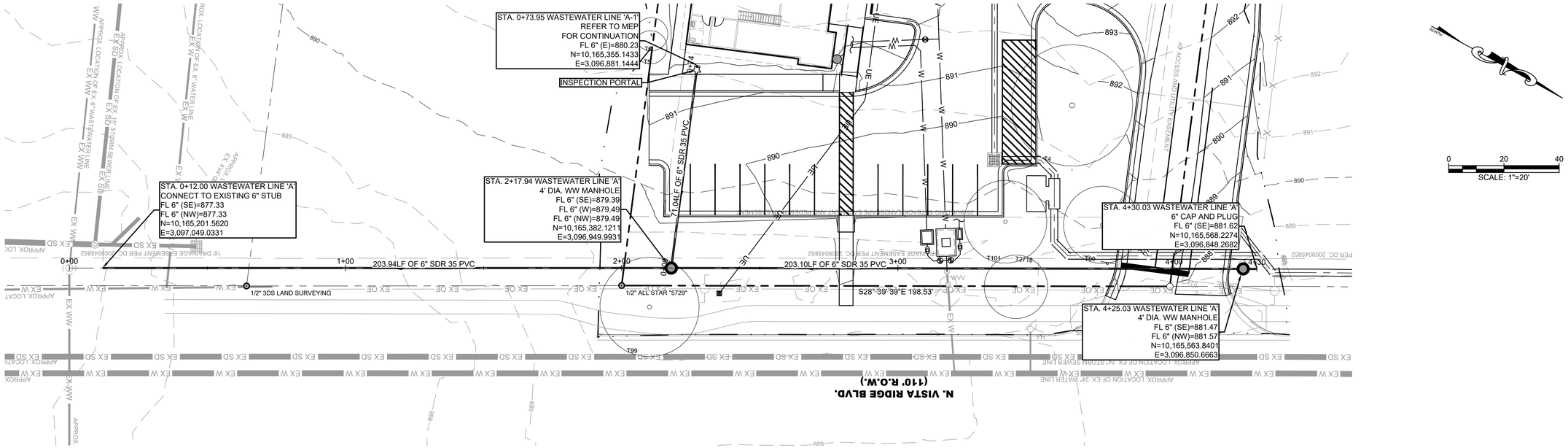

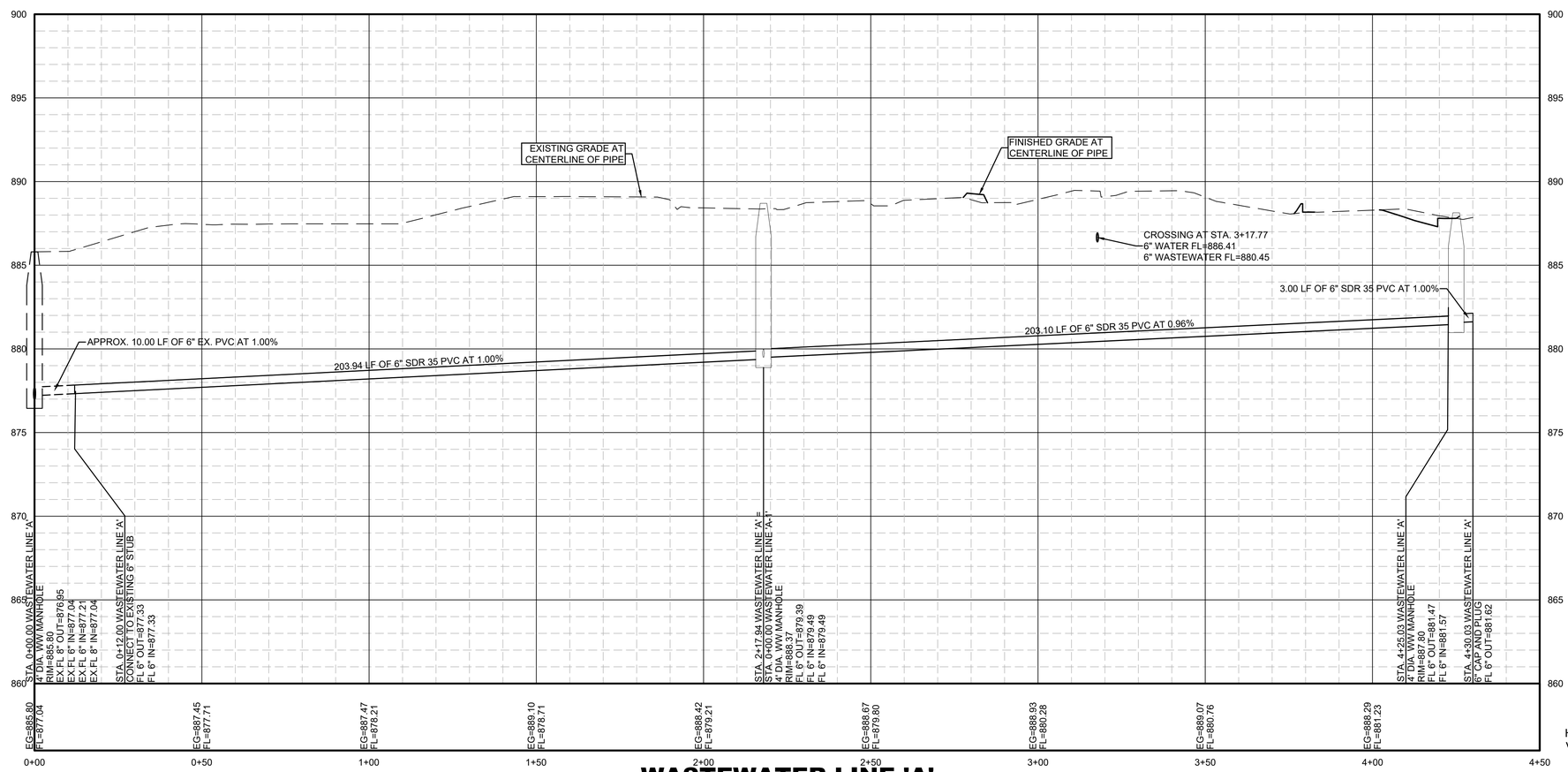

WASTEWATER LINE 'A'

LEGEND

LIMITS OF ON THE GROUND SURVEY

HORIZONTAL SCALE: 1"=20'
VERTICAL SCALE: 1"=4'

M&S ENGINEERING
ELECTRICAL | CIVIL | STRUCTURAL | MEP
TXENG FIRM # F-1394 | TBPELS FIRM #10169800
WWW.MSENGR.COM | (830) 228-5446

STATE OF TEXAS
JENNIFER L. HENDERSON
116883
LICENSED
PROFESSIONAL ENGINEER
09/18/2020

LAVISH SALON AND BOUTIQUE
901 N. VISTA RIDGE BLVD.
CEDAR PARK, TEXAS

WASTEWATER PLAN AND PROFILE

JOB:8120ADAYA.005	
DATE: 18/09/2020	
DRAWN: AR	PM: JH
DESIGN: AR	DM: JH
PEER: JS	OTHER:

REVISIONS:

DELTA	DESCRIPTION	DATE

SHEET:

14 OF 40

CITY PROJECT NUMBER: _____

Date: Sep 18, 2020, 12:22pm User ID: anelly
File: T:\active projects\8120ADAYA - lavish salon and boutique\dwg\Sheets\8120ADAYA.005-WASTEWATER PnP.dwg

LEGEND

— · · — LIMITS OF ON THE GROUND SURVEY

M&S ENGINEERING

ELECTRICAL | CIVIL | STRUCTURAL | MEP

TXENG FIRM # F-1394 | TBPELS FIRM #10169800

WWW.MSENGR.COM | (830) 228-5446

STATE OF TEXAS
JENNIFER L. HENDERSON
116883
LICENSED
PROFESSIONAL ENGINEER
09/18/2020

LAVISH SALON AND BOUTIQUE
901 N. VISTA RIDGE BLVD.
CEDAR PARK, TEXAS

STORM SEWER PLAN

JOB:8120ADAYA.005			
DATE: 18/09/2020			
DRAWN:	AR	PM:	JH
DESIGN:	AR	DM:	JH
PEER:	JS	OTHER:	

REVISIONS:

DELTA	DESCRIPTION	DATE

SHEET:

15 OF 40

CITY PROJECT NUMBER: _____

Date: Sep 18, 2020, 12:24pm User ID: anelly
File: T:\active projects\2020\20 - gwen gaston\general civil\8120adaya.005 - lavish salon and boutique\dwg\Sheets\8120ADAYA.005-STORM SEWER PLAN.dwg

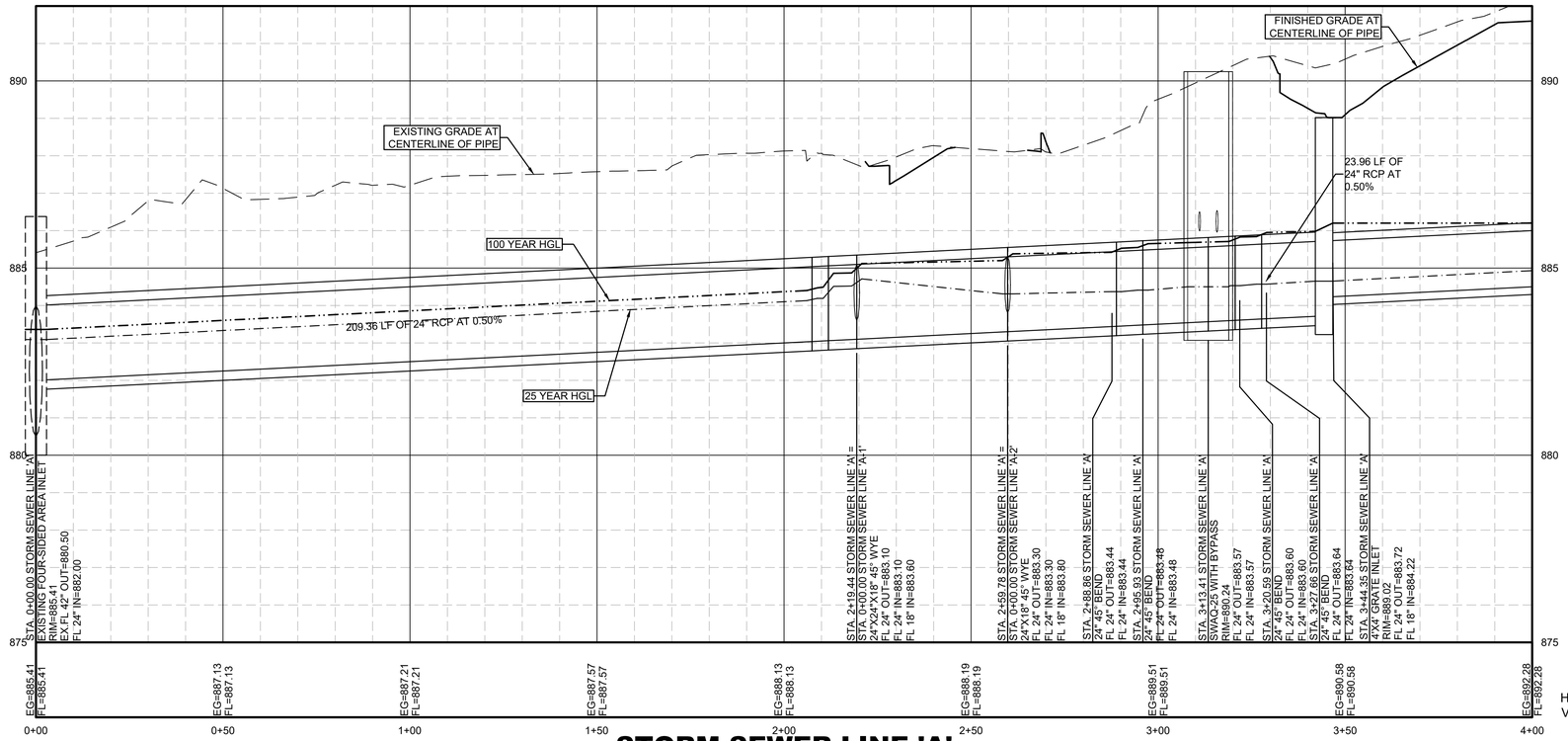

HORIZONTAL SCALE: 1"=20'
VERTICAL SCALE: 1"=2'

STORM SEWER LINE 'A'

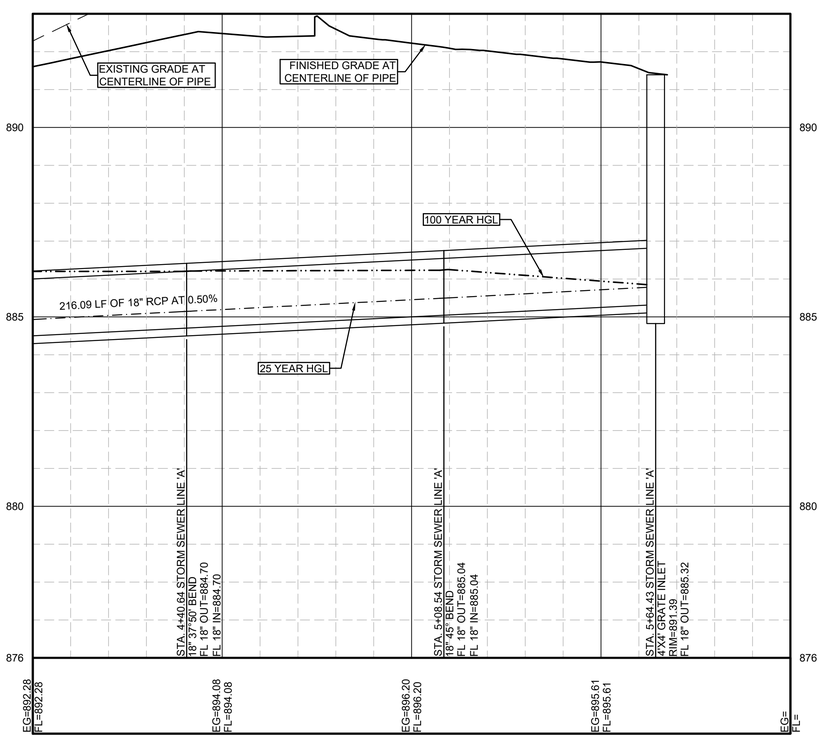

STORM SEWER LINE 'A'

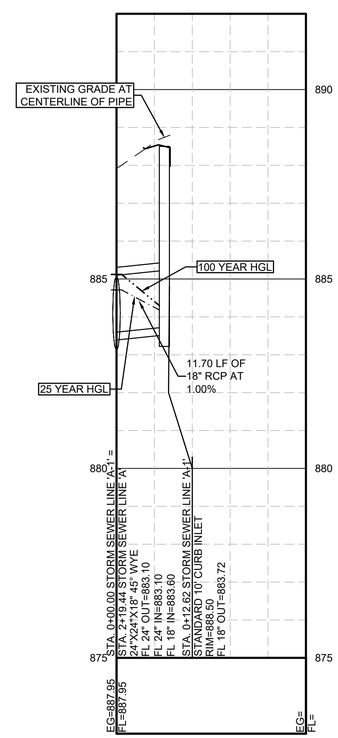

STORM SEWER LINE 'A-1'

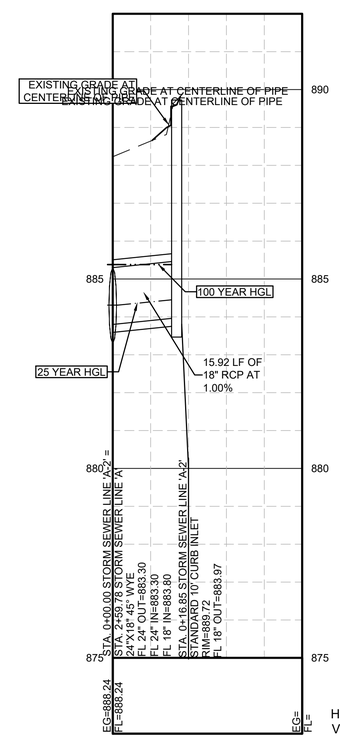

HORIZONTAL SCALE: 1"=20'
VERTICAL SCALE: 1"=2'

STORM SEWER LINE 'A-2'

M&S ENGINEERING
ELECTRICAL | CIVIL | STRUCTURAL | MEP
TXENG FIRM # F-1394 | TBPELS FIRM #10169800
WWW.MSENGR.COM | (830) 228-5446

STATE OF TEXAS
JENNIFER L. HENDERSON
116883
LICENSED
PROFESSIONAL ENGINEER
09/18/2020

LAVISH SALON AND BOUTIQUE
901 N. VISTA RIDGE BLVD.
CEDAR PARK, TEXAS

STORM SEWER PROFILE

JOB:8120ADAYA.005			
DATE: 18/09/2020			
DRAWN:	AR	PM:	JH
DESIGN:	AR	DM:	JH
PEER:	JS	OTHER:	

REVISIONS:

DELTA	DESCRIPTION	DATE

SHEET:

CITY PROJECT NUMBER: _____

Date: Sep 18, 2020, 12:24pm User ID: anelly
File: T:\active projects\8120.03 gwr-gatewn general civil\8120adaya.005 - lavish salon and boutique\dwg\Sheets\8120ADAYA.005-STORM PROFILE.dwg

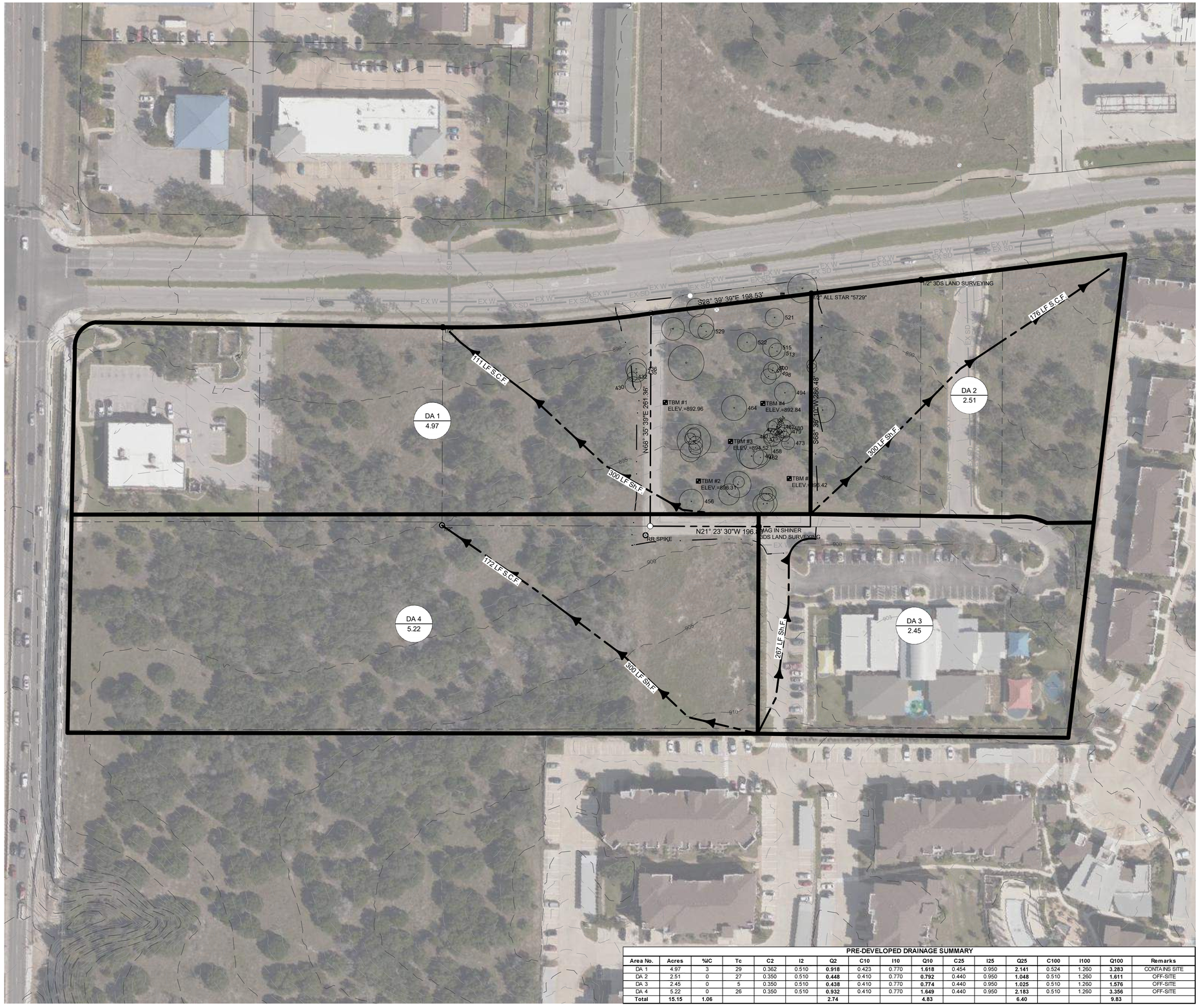

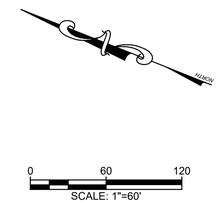

LEGEND

DA # / ##.##	DRAINAGE AREA NAME / AREA IN ACRES
	TIME OF CONCENTRATION PATH
	SURFACE WATER FLOW DIRECTION
Sh.F.	SHEET FLOW
Ch.F.	CHANNELIZED FLOW
S.C.F.	SHALLOW CONCENTRATED FLOW

PRE-DEVELOPED DRAINAGE SUMMARY

Area No.	Acres	%IC	Tc	C2	I2	Q2	C10	I10	Q10	C25	I25	Q25	C100	I100	Q100	Remarks
DA 1	4.97	3	29	0.362	0.510	**0.918**	0.423	0.770	**1.618**	0.454	0.950	**2.141**	0.524	1.260	**3.283**	CONTAINS SITE
DA 2	2.51	0	27	0.350	0.510	**0.448**	0.410	0.770	**0.792**	0.440	0.950	**1.048**	0.510	1.260	**1.611**	OFF-SITE
DA 3	2.45	0	5	0.350	0.510	**0.438**	0.410	0.770	**0.774**	0.440	0.950	**1.025**	0.510	1.260	**1.576**	OFF-SITE
DA 4	5.22	0	26	0.350	0.510	**0.932**	0.410	0.770	**1.649**	0.440	0.950	**2.183**	0.510	1.260	**3.356**	OFF-SITE
Total	**15.15**	**1.06**				**2.74**			**4.83**			**6.40**			**9.83**	

NOTES:
1. DRAINAGE AREAS ARE BASED ON THE APPROVED VISTA RIDGE MIXED USE PLANS BY ROBERT L. KOSTER, PE #84499, DATED JULY 3, 2009.

M&S ENGINEERING
ELECTRICAL | CIVIL | STRUCTURAL | MEP
TXENG FIRM # F-1394 | TBPELS FIRM #10169800
WWW.MSENGR.COM | (830) 228-5446

STATE OF TEXAS
JENNIFER L. HENDERSON
116883
LICENSED
PROFESSIONAL ENGINEER
09/18/2020

LAVISH SALON AND BOUTIQUE
901 N. VISTA RIDGE BLVD.
CEDAR PARK, TEXAS

PRE-DEVELOPMENT DRAINAGE AREA MAP

JOB:8120ADAYA.005
DATE: 18/09/2020

DRAWN:	AR	PM:	JH
DESIGN:	AR	DM:	JH
PEER:	JS	OTHER:	

REVISIONS:

DELTA	DESCRIPTION	DATE

SHEET:
17 OF 40

CITY PROJECT NUMBER: _____

Date: Sep 18, 2020, 12:24pm User ID: anelly
File: T:\active projects\8120ada ya\civil\8120adaya.005 - lavish salon and boutique\dwg\Sheets\8120ADAYA.005-PREDEV DAM.dwg

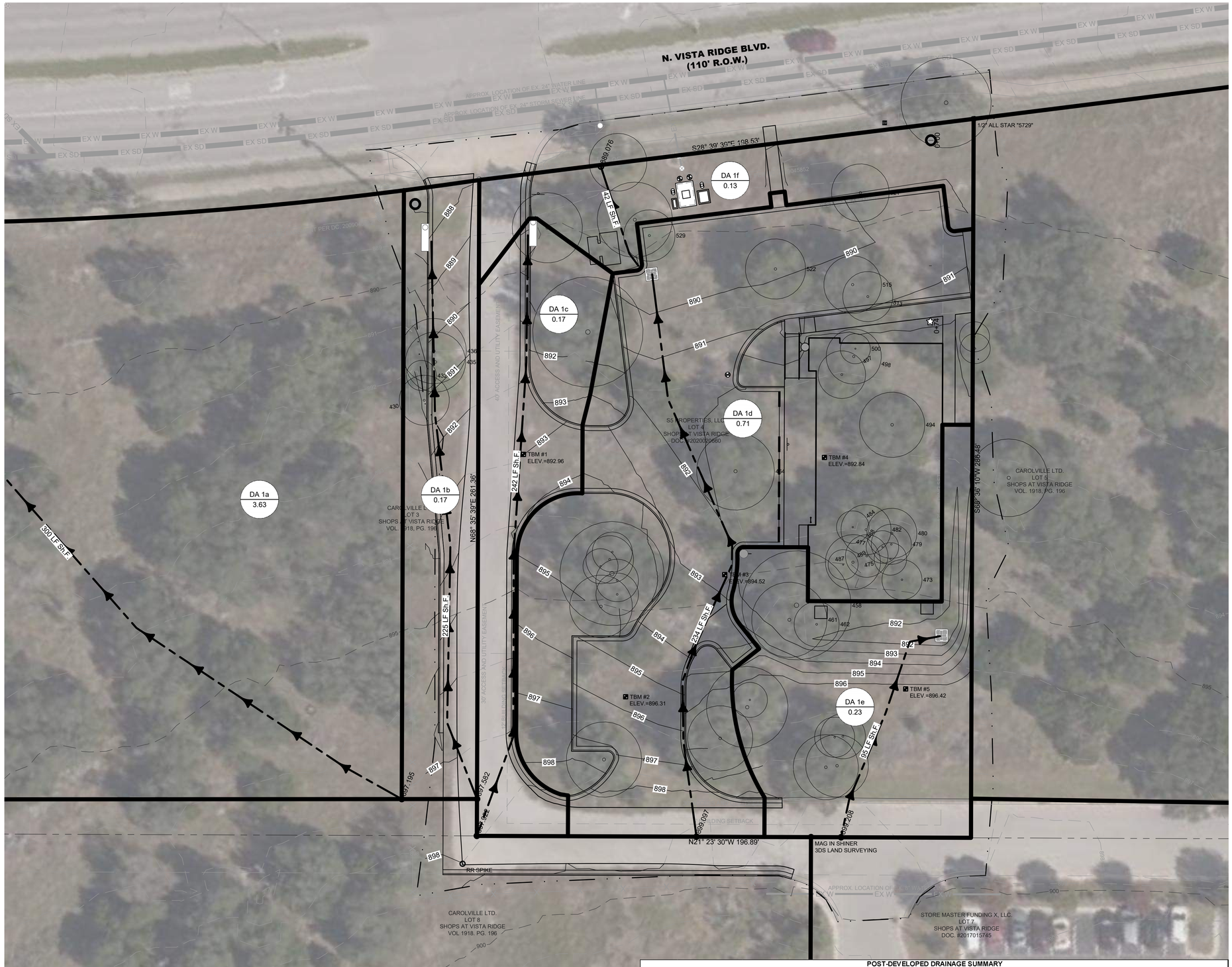

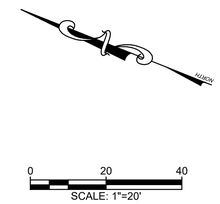

LEGEND

DA # / ##.##	DRAINAGE AREA NAME / AREA IN ACRES
	TIME OF CONCENTRATION PATH
	SURFACE WATER FLOW DIRECTION
Sh.F.	SHEET FLOW
Ch.F.	CHANNELIZED FLOW
S.C.F.	SHALLOW CONCENTRATED FLOW

POST-DEVELOPED DRAINAGE SUMMARY

Area No.	Acres	%IC	Tc	C2	I2	Q2	C10	I10	Q10	C25	I25	Q25	C100	I100	Q100	Remarks
DA 1a	3.63	80	26	0.600	0.510	**1.111**	0.664	0.770	**1.857**	0.704	0.950	**2.429**	0.776	1.260	**3.551**	OFF-SITE
DA 1b	0.17	59	5	0.587	0.510	**0.050**	0.659	0.770	**0.085**	0.701	0.950	**0.112**	0.783	1.260	**0.166**	CURB INLET
DA 1c	0.17	74	5	0.645	0.510	**0.055**	0.720	0.770	**0.093**	0.765	0.950	**0.122**	0.850	1.260	**0.179**	CURB INLET
DA 1d	0.71	76	5	0.655	0.510	**0.239**	0.731	0.770	**0.402**	0.776	0.950	**0.527**	0.861	1.260	**0.776**	GRATE INLET
DA 1e	0.23	13	5	0.403	0.510	**0.047**	0.466	0.770	**0.082**	0.498	0.950	**0.108**	0.571	1.260	**0.164**	GRATE INLET
DA 1f	0.13	2	5	0.357	0.510	**0.023**	0.417	0.770	**0.041**	0.448	0.950	**0.054**	0.518	1.260	**0.084**	OFF-SITE
Total	**5.04**	**73.58**				**1.53**			**2.56**			**3.35**			**4.92**	

NOTES:
1. DRAINAGE AREAS ARE BASED ON THE APPROVED VISTA RIDGE MIXED USE PLANS BY ROBERT L. KOSTER, PE #84499, DATED JULY 3, 2009 AND MODIFIED TO REFLECT POST-DEVELOPED DESIGN INTENT.
2. THE FLOW OFF THE SITE HAS NOT BEEN INCREASED FROM EXISTING CONDITION.

M&S ENGINEERING
ELECTRICAL | CIVIL | STRUCTURAL | MEP
TXENG FIRM # F-1394 | TBPELS FIRM #10169800
WWW.MSENGR.COM | (830) 228-5446

STATE OF TEXAS
JENNIFER L. HENDERSON
116883
LICENSED
PROFESSIONAL ENGINEER
09/18/2020

LAVISH SALON AND BOUTIQUE
901 N. VISTA RIDGE BLVD.
CEDAR PARK, TEXAS

POST-DEVELOPMENT DRAINAGE AREA MAP

JOB:8120ADAYA.005
DATE: 18/09/2020

DRAWN:	AR	PM:	JH
DESIGN:	AR	DM:	JH
PEER:	JS	OTHER:	

REVISIONS:

DELTA	DESCRIPTION	DATE

SHEET:
18 OF 40

CITY PROJECT NUMBER: _____

Date: Sep 18, 2020, 12:25pm User ID: amilly
File: T:\active projects\8120ada\8120-03 gver\gver\general civil\8120adaya.005 - lavish salon and boutique\dwg\Sheets\8120ADAYA.005-POSTDEV DAM.dwg

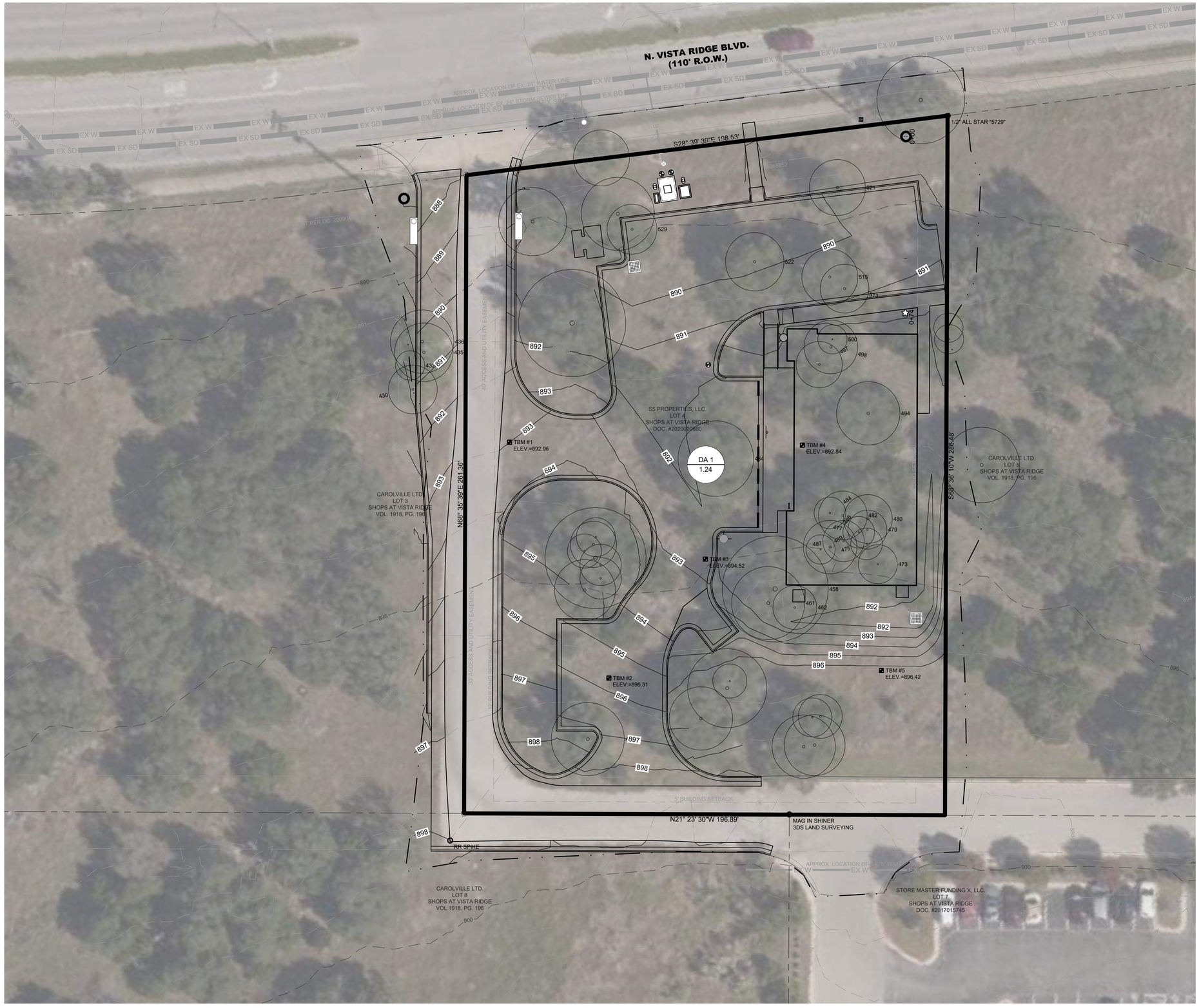

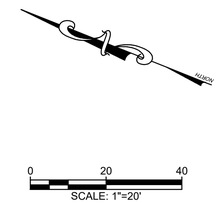

LEGEND

DA # / ##.##	DRAINAGE AREA NAME / AREA IN ACRES
	TIME OF CONCENTRATION PATH
	SURFACE WATER FLOW DIRECTION
Sh.F.	SHEET FLOW
Ch.F.	CHANNELIZED FLOW
S.C.F.	SHALLOW CONCENTRATED FLOW

M&S ENGINEERING
ELECTRICAL | CIVIL | STRUCTURAL | MEP
TXENG FIRM # F-1394 | TBPELS FIRM #10169800
WWW.MSENGR.COM | (830) 228-5446

STATE OF TEXAS
JENNIFER L. HENDERSON
116883
LICENSED
PROFESSIONAL ENGINEER
09/18/2020

LAVISH SALON AND BOUTIQUE
901 N. VISTA RIDGE BLVD.
CEDAR PARK, TEXAS

WATER QUALITY CONTRIBUTING ZONE PLAN

JOB:8120ADAYA.005	
DATE: 18/09/2020	
DRAWN: AR	PM: JH
DESIGN: AR	DM: JH
PEER: JS	OTHER:

REVISIONS:

DELTA	DESCRIPTION	DATE

SHEET:

19 OF 40

CITY PROJECT NUMBER: _____

Date: Sep 18, 2020, 12:25pm User ID: amilly
File: T:\active projects\8120ada ya\general civil\8120adaya.005 - lavish salon and boutique\dwg\Sheets\8120ADAYA.005-CZP DAM.dwg

Texas Commission on Environmental Quality
TSS Required Load Reduction Calculations

Project Name: Lavish Salon
Project Location: Cedar park
Date Prepared: 9/14/2020
Prepared For: Adam Reilly

Lm = 27.2(AN x P)

where:
Lm = Required TSS removal
An = Net increase in impervious area for site
P = Average annual precipitation, inches

Site Data:
County = **Williamson**
Stormwater Quality Structure = **Wet Vault**
Total site area = **1.24** acres
Pre-development impervious area = **0.16** acres
Post-development impervious area = **0.70** acres
Post-development impervious fraction = **0.56**
P = **32** inches

Lm = **468** lbs. Total Project Required Removal

Drainage Basin	Outfall	Total Area	Impervious Cover	Impervious Area	Pre-Dev. Impervious Cover	A_n for Drainage Area	Runoff Coef. (C)	Pervious Area	Runoff Coef. (C)	Composite Runoff Coef. (C)	**Effective Area**	Intensity (I)	Calculated Flow (Q)	Required Pollutant Removal	StormTrooper Model	Unit Surface Area	By-Pass Flowrate	Intensity Treated	Fraction of Flow Treated (F)	F/0.9	Overflow Rate (ft/s)	Removal Effecency	Actual Effeciency	Load Reduction (L_R)
	[ID]	[ac]	[%]	[ac]	[ac]	[ac]		[ac]			[ac]	[in/hr]	[cfs]	L_m in [lbs]	#	(sf)	(cfs)	[in/hr]	[Figure 3-11]			[Figure 3-10]		(lbs)
1	DA 1	**0.9400**	**60.6%**	0.57	**0.0500**	0.52	0.9	0.37	0.03	0.56	0.48	1.1	0.58	452	**25**	369	3.21	1.10	**0.90**	1.00	1.56E-03	**78%**	78%	**497**
2				0.00		0.00	0.9	0.00	0.03	#DIV/0!	0.00	1.1	#DIV/0!	0		#N/A	#N/A	#N/A	**0.90**	1.00	#N/A		0%	**0**
3				0.00		0.00	0.9	0.00	0.03	#DIV/0!	0.00	1.1	#DIV/0!	0		#N/A	#N/A	#N/A	**0.90**	1.00	#N/A		0%	**0**
				0.00		0.00	0.9	0.00	0.03	#DIV/0!	0.00	1.1	#DIV/0!	0		#N/A	#N/A	#N/A	**0.90**	1.00	#N/A		0%	**0**
				0.00		0.00	0.9	0.00	0.03	#DIV/0!	0.00	1.1	#DIV/0!	0		#N/A	#N/A	#N/A	**0.90**	1.00	#N/A		0%	**0**
				0.00		0.00	0.9	0.00	0.03	#DIV/0!	0.00	1.1	#DIV/0!	0		#N/A	#N/A	#N/A	**0.90**	1.00	#N/A		0%	**0**
				0.00		0.00	0.9	0.00	0.03	#DIV/0!	0.00	1.1	#DIV/0!	0		#N/A	#N/A	#N/A	**0.90**	1.00	#N/A		0%	**0**
				0.00		0.00	0.9	0.00	0.03	#DIV/0!	0.00	1.1	#DIV/0!	0		#N/A	#N/A	#N/A	**0.90**	1.00	#N/A		0%	**0**
				0.00		0.00	0.9	0.00	0.03	#DIV/0!	0.00	1.1	#DIV/0!	0		#N/A	#N/A	#N/A	**0.90**	1.00	#N/A		0%	**0**
				0.00		0.00	0.9	0.00	0.03	#DIV/0!	0.00	1.1	#DIV/0!	0		#N/A	#N/A	#N/A	**0.90**	1.00	#N/A		0%	**0**
				0.00		0.00	0.9	0.00	0.03	#DIV/0!	0.00	1.1	#DIV/0!	0		#N/A	#N/A	#N/A	**0.90**	1.00	#N/A		0%	**0**
				0.00		0.00	0.9	0.00	0.03	#DIV/0!	0.00	1.1	#DIV/0!	0		#N/A	#N/A	#N/A	**0.90**	1.00	#N/A		0%	**0**
				0.00		0.00	0.9	0.00	0.03	#DIV/0!	0.00	1.1	#DIV/0!	0		#N/A	#N/A	#N/A	**0.90**	1.00	#N/A		0%	**0**

Total TSS Removed by BMP's Annually = 497
Total Required Reduction (Lm) = 468
Solids Removed By Other Means = 0
Sufficient Removal = Yes

STORMTROOPER

Model	S.A.	By-Pass	E.A. @ 80%
5	100	420	< 0.13
10	149	600	0.14 - 0.20
20	248	1000	0.21 - 0.33
25	369	1440	0.34 - 0.50
40	588	2250	0.51 - 0.79
70	730	2720	0.80 - 0.98
110	913	4000	0.99 - 1.23

E.A. = (Imp. x 0.9 + Perv. x 0.03)
100% Impervious Acres Treated/Single Unit
0.14 Acres
0.22 Acres
0.37 Acres
0.56 Acres
0.88 Acres
1.09 Acres
1.37 Acres

Texas Commission on Environmental Quality
TSS Removal Calculations

AREA DA 1	DRAINAGE BASIN 1	TOTAL SITE DETAILS

STEP ONE: Required TSS Removal

EQUATION 3.3
$L_m = 27.2(A_n \times P)$
L_m = Required TSS Removal (pounds)
A_n = Net Increase in Impervius Area (acres)
P = Average Annual Precipitation (inches)

Drainage Basin = 0.94 Acres
Pre-Dev. Imp. Area = 0.05 Acres
Post-Dev. Imp. Area = 0.52
Pervious Area = 0.37 Acres
P = 32 Inches
L_m = 452 Lbs

Project Name: Lavish Salon
Project Location: Cedar park
Date Prepared: 9/14/2020
Prepared By: Adam Reilly
Total Project Area to be Treated = 1.24
Pre-Development Impervious Area = 0.16
Post-Development Impervious Area = 0.70
Composite Run-Off Coefficient = 0.56
Required TSS Removal L_m = 468
County = Williamson

STORMTROOPER

Model	E.A. @ 80%
5	< 0.13
10	0.14 - 0.20
20	0.21 - 0.33
25	0.34 - 0.50
40	0.51 - 0.79
70	0.80 - 0.98
110	0.99 - 1.23

STEP TWO: Select an Appropriate BMP

Effective Area = 0.48 EA = (Ai x 0.9) + (Ap x 0.03)
StormTrooper SWAQ 25
Unit Surface Area = 369 Sq. Ft.

EQUATION 3.4
Q = CIA, where:
C = 0.56 Composite Run-Off Coefficient
i = 1.10 Stormwater Quality Intensity
A = c Drainage Basin Acreage
Q = d Required Treatment Flow
EQUATION 3.5 ef 0.905 90.50%

Q = 0.58 Required Treatment Flow
A = 369 Unit Surface Area
V_{OR} = 1.56E-03 Overflow Rate
BMP Effeciency = 78%

STEP THREE: Calculate Fraction of Annual Runoff to be Treated

Unit By-Pass Flowrate = 3.21 cfs
Treated Intensity = 1.10 in/hr
Annual Volume Treated = 90% Volume of Run-Off Entering Unit
Treatment Reduction = 1.00 BMP Effeciency Reduction Factor
Actual BMP Effeciency = 78%

STEP FOUR: Calculate TSS Load Removed by BMPs

EQUATION 3.8
L_r = (BMP Efficiency) x P x (A_i x 34.6 + A_p x 0.54)
L_r = Load Removed by BMP
BMP Efficiency = TSS Removal Efficiency
A_i = Impervious Tributary Area to the BMP (ac)
A_p = Pervious Tributary Area to the BMP (ac)

A_i = 0.57
A_p = 0.37

L_r = 497 lbs

M&S ENGINEERING
ELECTRICAL | CIVIL | STRUCTURAL | MEP
TXENG FIRM # F-1394 | TBPELS FIRM #10169800
WWW.MSENGR.COM | (830) 228-5446

STATE OF TEXAS
JENNIFER L. HENDERSON
116883
LICENSED
PROFESSIONAL ENGINEER
09/18/2020

LAVISH SALON AND BOUTIQUE
901 N. VISTA RIDGE BLVD.
CEDAR PARK, TEXAS

WATER QUALITY CALCULATIONS

JOB:8120ADAYA.005
DATE: 18/09/2020
DRAWN: AR PM: JH
DESIGN: AR DM: JH
PEER: JS OTHER:
REVISIONS:
DELTA | DESCRIPTION | DATE

SHEET:

CITY PROJECT NUMBER: _____

Date: Sep 18, 2020, 12:25pm User ID: areilly
File: T:\acme projects\2020\20 georgetown\general civil\8120adaya.005 - lavish salon and boutique\dwg\Sheets\8120ADAYA.005-CALCULATIONS.dwg

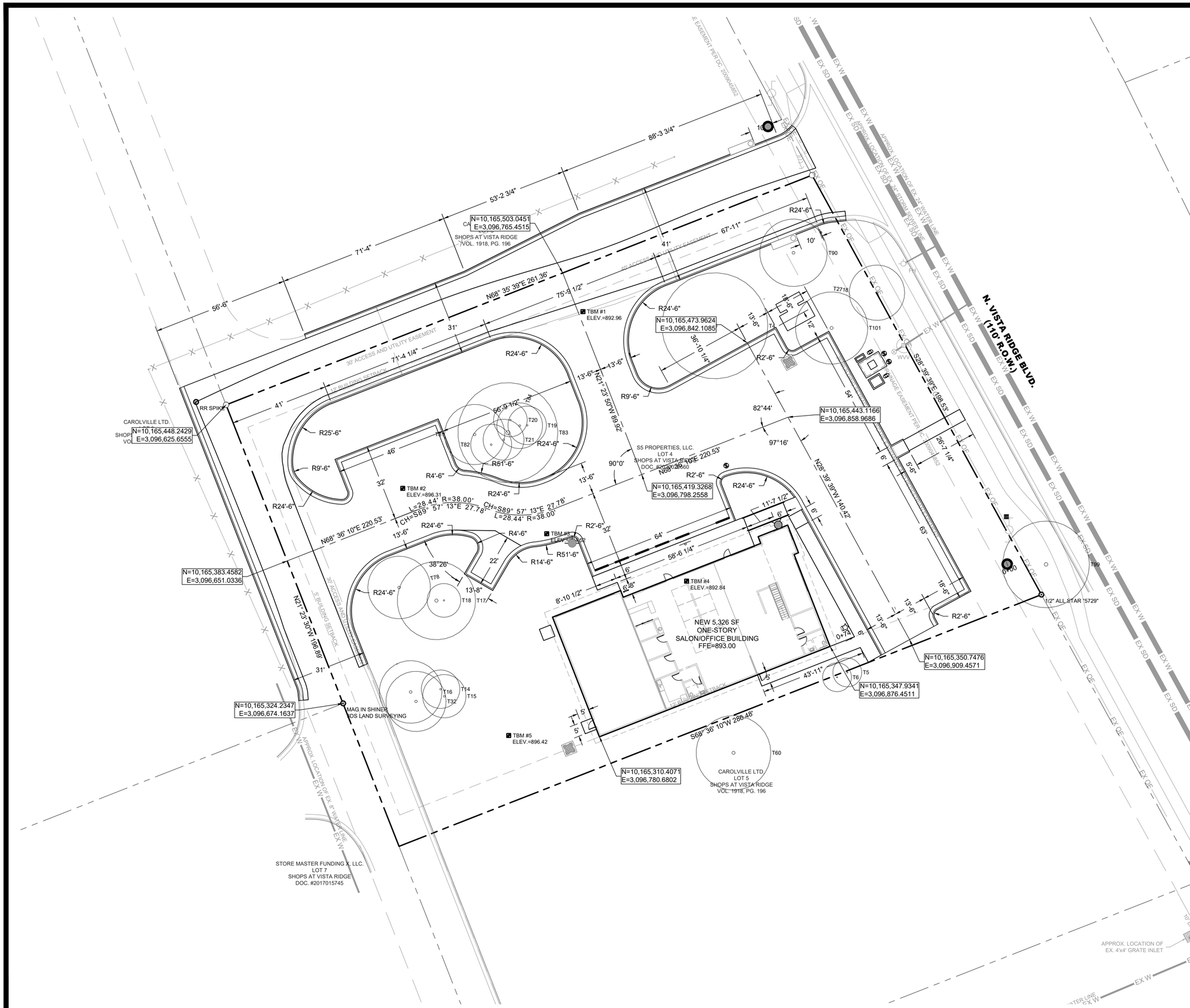

NOTES:

1. ALL DIMENSIONS ARE TO THE BACK OF CURB UNLESS OTHERWISE NOTED.
2. CURB RETURN RADII ARE 2'-6" TO BACK OF CURB, UNLESS OTHERWISE NOTED.

M&S ENGINEERING
ELECTRICAL | CIVIL | STRUCTURAL | MEP
TXENG FIRM # F-1394 | TBPELS FIRM #10169800
WWW.MSENGR.COM | (830) 228-5446

STATE OF TEXAS
JENNIFER L. HENDERSON
116883
LICENSED
PROFESSIONAL ENGINEER
09/18/2020

LAVISH SALON AND BOUTIQUE
901 N. VISTA RIDGE BLVD.
CEDAR PARK, TEXAS

DIMENSION CONTROL PLAN

JOB:8120ADAYA.005			
DATE: 18/09/2020			
DRAWN:	AR	PM:	JH
DESIGN:	AR	DM:	JH
PEER:	JS	OTHER:	

REVISIONS:

DELTA	DESCRIPTION	DATE

SHEET:

21 OF 40

CITY PROJECT NUMBER: _____

Date: Sep 18, 2020, 12:25pm User ID: arreilly
File: T:\active projects\2020\30 | georgetown general civil\8120adaya.005 - lavish salon and boutique\dwg\Sheets\8120ADAYA.005-DIMENSION CONTROL.dwg

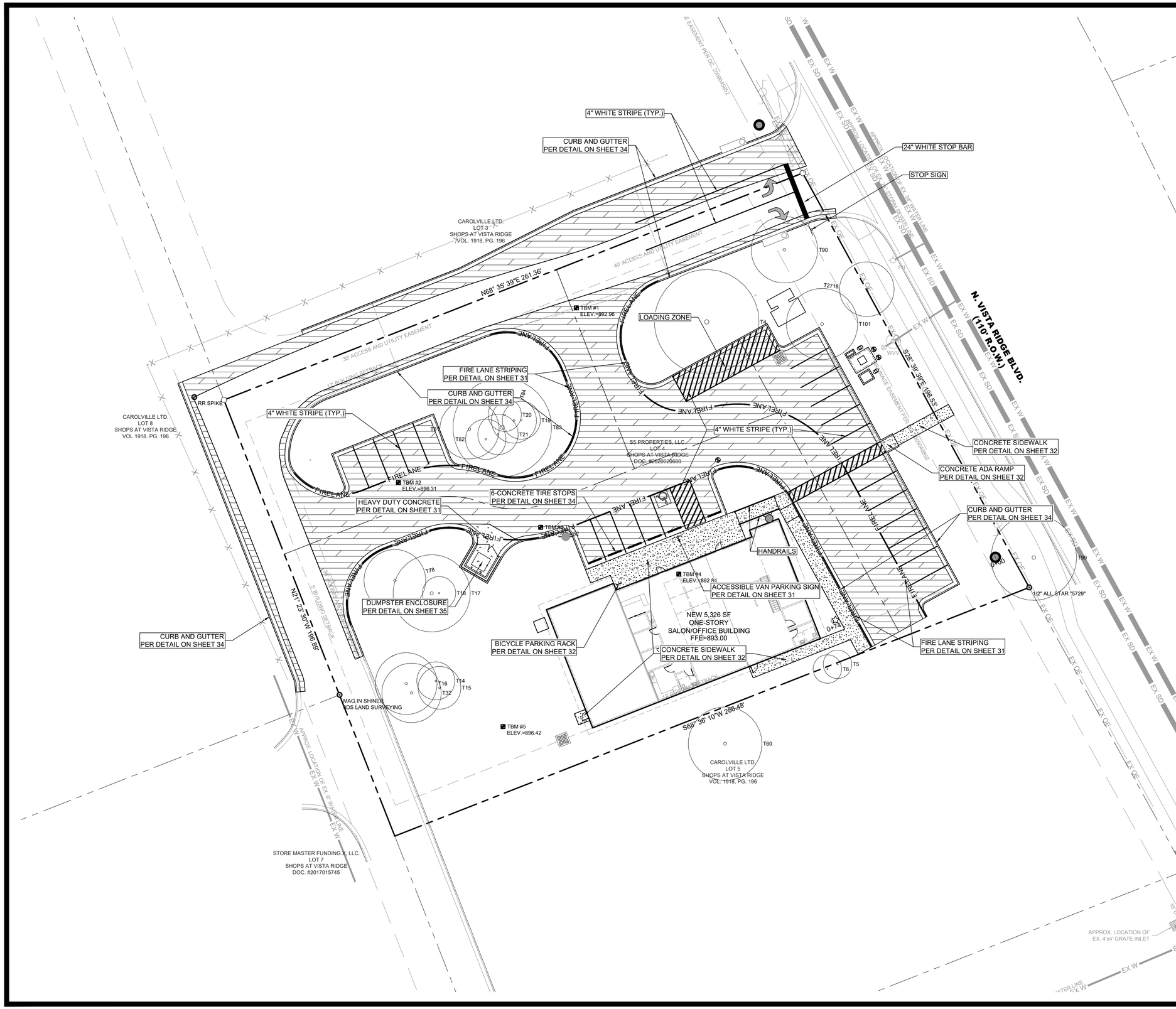

LEGEND

- ASPHALT PAVEMENT PER DETAIL ON SHEET 31
- CONCRETE PAVEMENT PER DETAIL ON SHEET 31
- CONCRETE SIDEWALK PER DETAIL ON SHEET 31

NOTES:

1. ALL DIMENSIONS ARE TO THE FACE OF CURB, OR CENTER OF STRIPING (WHERE APPLICABLE), UNLESS OTHERWISE NOTED.
2. FIRE APPARATUS ACCESS ROADS SHALL BE DESIGNED AND MAINTAINED TO SUPPORT THE IMPOSED LOADS OF FIRE APPARATUS AND SHALL BE SURFACED SO AS TO PROVIDE ALL-WEATHER DRIVING CAPABILITIES.

M&S ENGINEERING
ELECTRICAL | CIVIL | STRUCTURAL | MEP
TXENG FIRM # F-1394 | TBPELS FIRM #10169800
WWW.MSENGR.COM | (830) 228-5446

STATE OF TEXAS
JENNIFER L. HENDERSON
116883
LICENSED
PROFESSIONAL ENGINEER
09/18/2020

LAVISH SALON AND BOUTIQUE
901 N. VISTA RIDGE BLVD.
CEDAR PARK, TEXAS

PAVING AND STRIPING PLAN

JOB:8120ADAYA.005			
DATE: 18/09/2020			
DRAWN:	AR	PM:	JH
DESIGN:	AR	DM:	JH
PEER:	JS	OTHER:	

REVISIONS:

DELTA	DESCRIPTION	DATE

SHEET:

22 OF 40

CITY PROJECT NUMBER: _____

Date: Sep 18, 2020, 12:26pm User ID: arelly
File: Y:\active projects\8120ada\general civil\8120adaya.005 - lavish salon and boutique\dwg\Sheets\8120ADAYA.005-PAVING PLAN.dwg

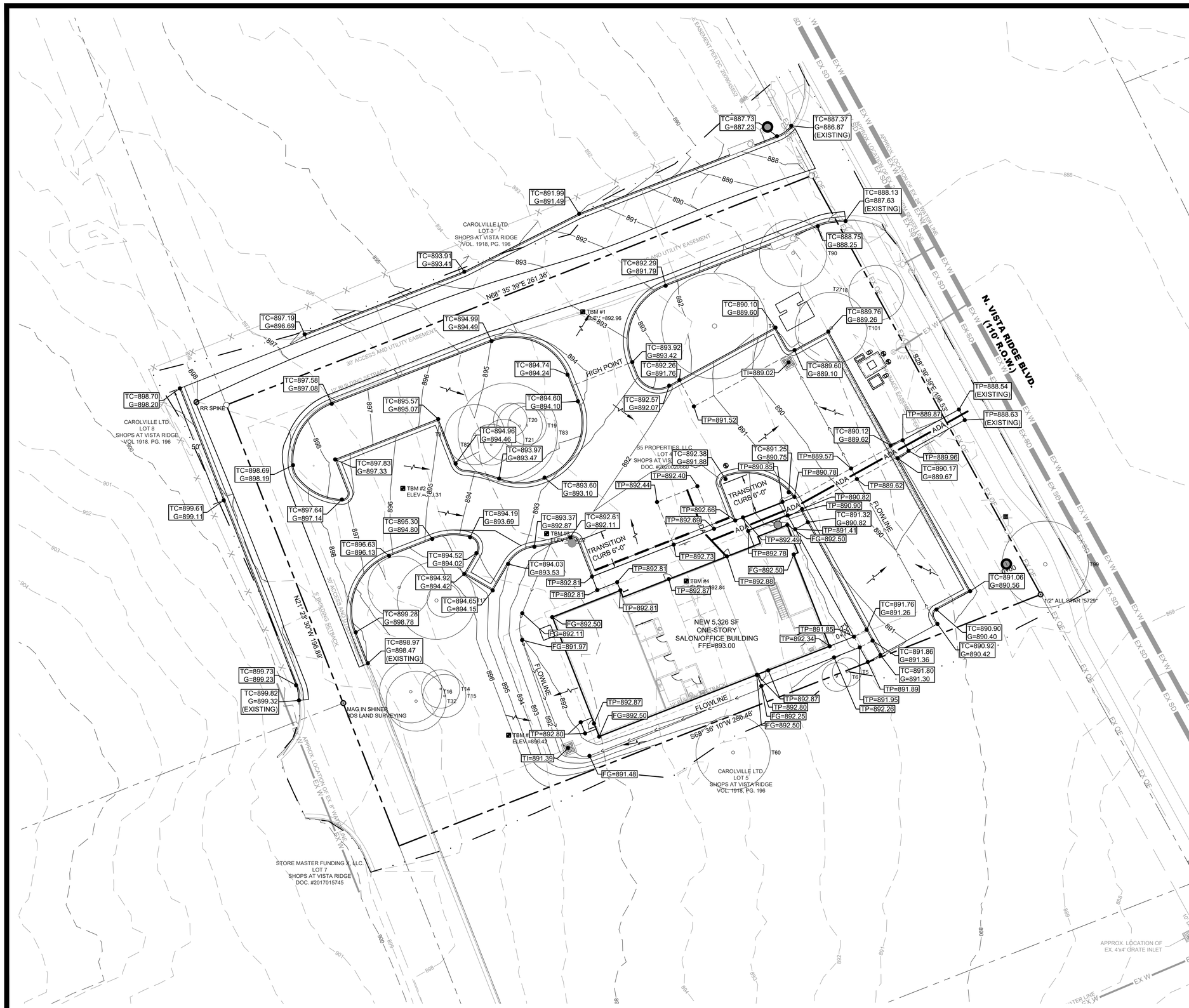

0 20 40
SCALE: 1"=20'

EARTHWORK CALCULATIONS				
2D AREA (S.F.)	CUT (C.Y.)	FILL (C.Y.)	NET (C.Y.)	CUT/FILL
140,082.41	1,004.00	225.98	778.02	CUT

LEGEND

— · · —	LIMITS OF ON THE GROUND SURVEY
ADA	ACCESSIBLE ROUTE
	SURFACE WATER FLOW DIRECTION
TP	TOP OF PAVEMENT
TW	TOP OF WALL
TF	TOP OF FOOTING
FG	FINISHED GRADE

M&S ENGINEERING
ELECTRICAL | CIVIL | STRUCTURAL | MEP
TXENG FIRM # F-1394 | TBPELS FIRM #10169800
WWW.MSENGR.COM | (830) 228-5446

STATE OF TEXAS
JENNIFER L. HENDERSON
116883
LICENSED
PROFESSIONAL ENGINEER
09/18/2020

LAVISH SALON AND BOUTIQUE
901 N. VISTA RIDGE BLVD.
CEDAR PARK, TEXAS

GRADING PLAN

JOB:8120ADAYA.005			
DATE: 18/09/2020			
DRAWN:	AR	PM:	JH
DESIGN:	AR	DM:	JH
PEER:	JS	OTHER:	

REVISIONS:

DELTA	DESCRIPTION	DATE

SHEET:

CITY PROJECT NUMBER: _____

Date: Sep 18, 2020, 12:26pm User ID: arealty
File: T:\active projects\8120adaya.005 - lavish salon and boutique\dwg\Sheets\8120ADAYA.005-GRADING PLAN.dwg

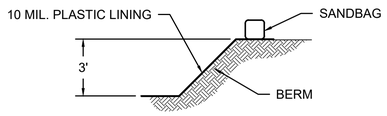

SECTION A-A

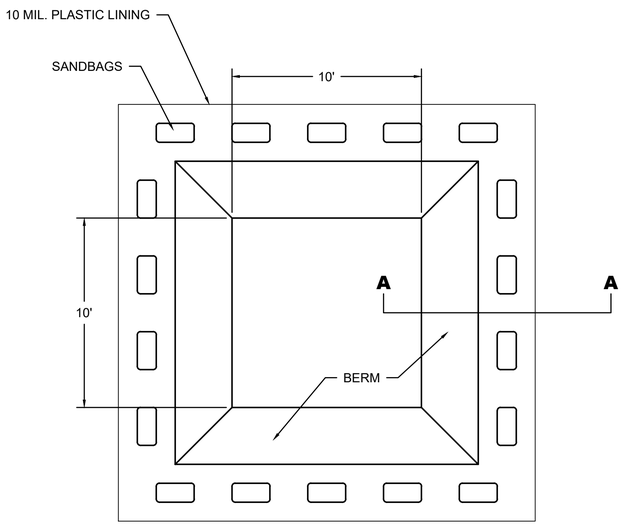

01 CONCRETE WASHOUT

SCALE: 1/4" = 1'-0"

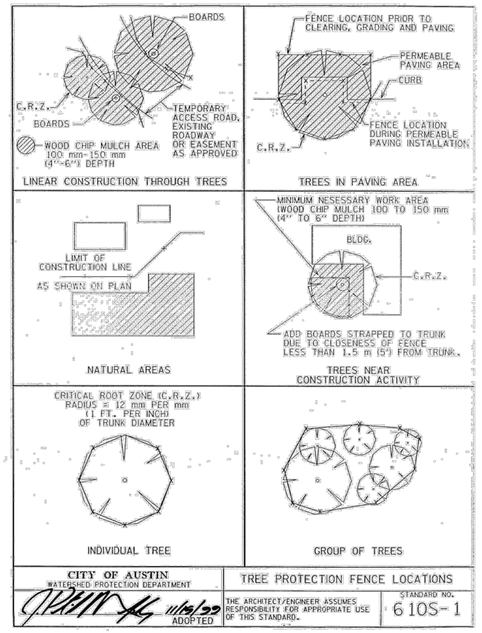

CITY OF AUSTIN
WATERSHED PROTECTION DEPARTMENT

TREE PROTECTION FENCE LOCATIONS

11/15/00 ADOPTED

THE ARCHITECT/ENGINEER ASSUMES RESPONSIBILITY FOR APPROPRIATE USE OF THIS STANDARD.

STANDARD NO. 610S-1

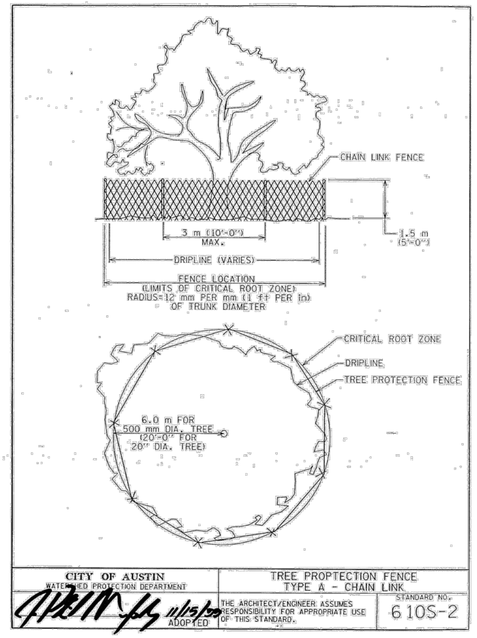

CITY OF AUSTIN
WATERSHED PROTECTION DEPARTMENT

TREE PROPTECTION FENCE
TYPE A - CHAIN LINK

11/15/00 ADOPTED

THE ARCHITECT/ENGINEER ASSUMES RESPONSIBILITY FOR APPROPRIATE USE OF THIS STANDARD.

STANDARD NO. 610S-2

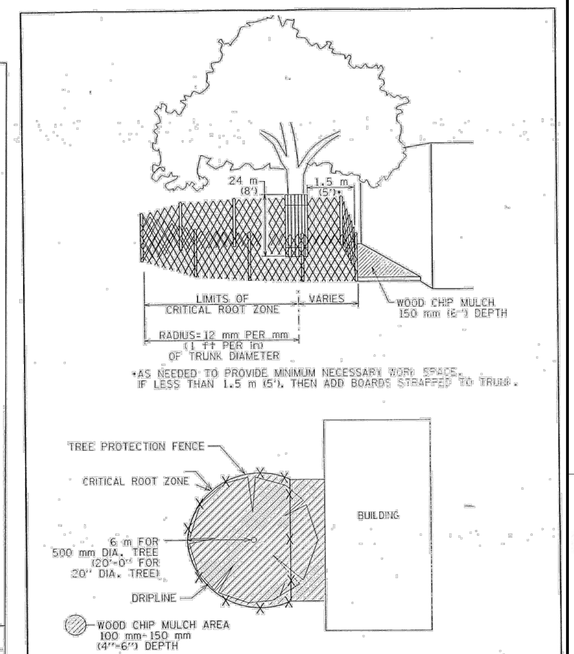

CITY OF AUSTIN
WATERSHED PROTECTION DEPARTMENT

TREE PROTECTION FENCE
MODIFIED TYPE A - CHAIN LINK

11/15/00 ADOPTED

THE ARCHITECT/ENGINEER ASSUMES RESPONSIBILITY FOR APPROPRIATE USE OF THIS STANDARD.

STANDARD NO. 610S-4

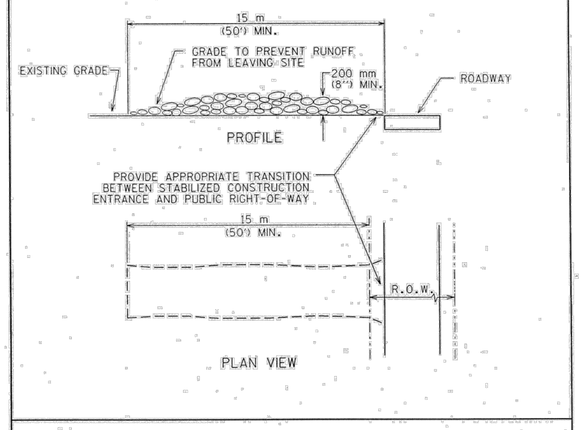

NOTES:

1. STONE SIZE: 75-125 mm (3-5") OPEN GRADED ROCK.
2. LENGTH: AS EFFECTIVE BUT NOT LESS THAN 15 m (50').
3. THICKNESS: NOT LESS THAN 200 mm (8").
4. WIDTH: NOT LESS THAN FULL WIDTH OF ALL POINTS OF INGRESS/EGRESS.
5. WASHING: WHEN NECESSARY, VEHICLE WHEELS SHALL BE CLEANED TO REMOVE SEDIMENT PRIOR TO ENTRANCE ONTO PUBLIC ROADWAY. WHEN WASHING IS REQUIRED, IT SHALL BE DONE ON AN AREA STABILIZED WITH CRUSHED STONE AND DRAINS INTO AN APPROVED TRAP OR SEDIMENT BASIN. ALL SEDIMENT SHALL BE PREVENTED FROM ENTERING ANY STORM DRAIN, DITCH OR WATERCOURSE USING APPROVED METHODS.
6. MAINTENANCE: THE ENTRANCE SHALL BE MAINTAINED IN A CONDITION THAT WILL PREVENT TRACKING OR FLOWING OF SEDIMENT ONTO PUBLIC ROADWAY. THIS MAY REQUIRE PERIODIC TOP DRESSING WITH ADDITIONAL STONE AS CONDITIONS DEMAND, AS WELL AS REPAIR AND CLEAN OUT OF ANY MEASURE DEVICES USED TO TRAP SEDIMENT. ALL SEDIMENTS THAT IS SPILLED, DROPPED, WASHED OR TRACKED ONTO PUBLIC ROADWAY MUST BE REMOVED IMMEDIATELY.
7. DRAINAGE: ENTRANCE MUST BE PROPERLY GRADED OR INCORPORATE A DRAINAGE SWALE TO PREVENT RUNOFF FROM LEAVING THE CONSTRUCTION SITE.

CITY OF AUSTIN
WATERSHED PROTECTION DEPARTMENT

STABILIZED CONSTRUCTION ENTRANCE

5/23/00 ADOPTED

THE ARCHITECT/ENGINEER ASSUMES RESPONSIBILITY FOR APPROPRIATE USE OF THIS STANDARD.

STANDARD NO. 641S-1

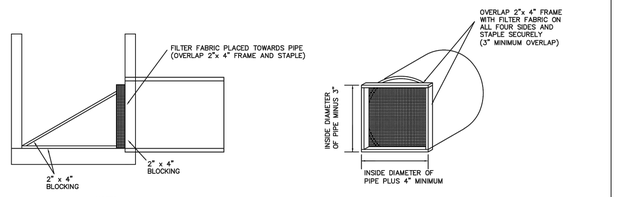

NOTES:

STORM INLET SEDIMENT TRAPS SHALL BE PLACED IN ALL PROPOSED CURB INLETS AND AREA INLETS AS DIRECTED BY THE CITY OF CEDAR PARK'S PROJECT REPRESENTATIVE.

THE LATERAL BRACING SHALL BE PLACED IN A MANNER AS TO ADEQUATELY SECURE THE FILTER FRAME TO THE SIDE OF THE INLET, INSURING THE PROPER FUNCTION OF THE SEDIMENT TRAP.

FILTER FABRIC MAY BE IDENTICAL TO THAT SPECIFIED AS "TEMPORARY SEDIMENT CONTROL FENCE". OTHER MATERIAL MAY BE USED UPON APPROVAL OF THE CITY OF CEDAR PARK'S PROJECT REPRESENTATIVE.

THE "STORM INLET SEDIMENT TRAPS" SHALL BE INSTALLED UPON COMPLETION OF THE PROPOSED INLET WALLS OR AS DIRECTED BY THE CITY OF CEDAR PARK'S PROJECT REPRESENTATIVE.

THE CONTRACTOR WILL BE REQUIRED TO PERFORM PERIODIC MAINTENANCE OF THE SEDIMENT TRAP AND REMOVE ACCUMULATED SILT AS DIRECTED BY THE CITY OF CEDAR PARK'S PROJECT REPRESENTATIVE.

"STORM INLET SEDIMENT TRAPS" SHALL REMAIN IN PLACE UNTIL CONSTRUCTION OF THE PROPOSED INLET DECK BEGINS.

ALL WOOD SHALL BE PRESSURE TREATED.

STORM INLET SEDIMENT TRAP

CITY OF CEDAR PARK
PUBLIC WORKS ENGINEERING

DARWIN MARCHELL, P.E.

STANDARD DETAIL
STORM INLET SEDIMENT TRAP

ADOPTED: 01/02/01
SCALE: NTS
INITIAL:

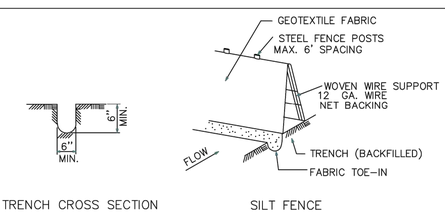

GENERAL NOTES:

1. SILT FENCE LOCATED ADJACENT TO PLAYGROUNDS, PARKS, SIDEWALKS, AND OTHER LOCATIONS AS DETERMINED BY CITY OF CEDAR PARK REPRESENTATIVES SHALL HAVE CITY APPROVED SAFETY CAPS ON ALL STEEL POSTS.

2. STEEL POSTS WHICH SUPPORT THE SILT FENCE SHALL BE INSTALLED ON A SLIGHT ANGLE TOWARD THE ANTICIPATED RUNOFF SOURCE.

3. POST MUST BE EMBEDDED A MINIMUM OF ONE FOOT. THE TOE OF THE SILT FENCE SHALL BE TRENCHED IN WITH A SPADE OR MECHANICAL TRENCHER, SO THAT THE DOWNSLOPE FACE OF THE TRENCH IS FLAT AND PERPENDICULAR TO THE LINE OF FLOW.

4. WHERE FENCE CAN NOT BE TRENCHED IN (E.G. PAVEMENT) WEIGHT FABRIC FLAP WITH WASHED GRAVEL ON UPHILL SIDE TO PREVENT FLOW UNDER FENCE. 6 INCHES DEEP AND 6 INCHES WIDE TO THE TRENCH MUST BE A MINIMUM OF ALLOW FOR THE SILT FENCE FABRIC TO BE LAID IN THE GROUND AND BACKFILLED WITH COMPACTED MATERIAL.

5. SILT FENCE SHOULD BE SECURELY FASTENED TO EACH STEEL SUPPORT POST OR TO WOVEN WIRE, WHICH IS IN TURN ATTACHED TO THE STEEL FENCE POST.

6. INSPECTION SHALL BE MADE WEEKLY OR AFTER EACH RAINFALL EVENT AND REPAIR OR REPLACEMENT SHALL BE MADE PROMPTLY AS NEEDED.

7. SILT FENCE SHALL BE REMOVED WHEN THE SITE IS COMPLETELY STABILIZED SO AS NOT TO BLOCK OR IMPEDE STORM FLOW OR DRAINAGE. ACCUMULATED SILT SHALL BE REMOVED WHEN IT REACHES A DEPTH OF 6 INCHES.

8. THE SILT SHALL BE DISPOSED OF IN AN APPROVED SITE AND IN SUCH A MANNER AS TO NOT CONTRIBUTE TO ADDITIONAL SILTATION.

STANDARD SYMBOL SF / L=

REV. DATE: 09/13/01

CITY OF CEDAR PARK
ENGINEERING DEPARTMENT

SILT FENCE

DARWIN MARCHELL 09/13/2001
APPROVED DATE

ADOPTED: 09/13/2001
SCALE: N.T.S.
INITIAL:

M&S ENGINEERING
ELECTRICAL | CIVIL | STRUCTURAL | MEP
TXENG FIRM # F-13394 | TBPELS FIRM #10169800
WWW.MSENGR.COM | (830) 228-5446

STATE OF TEXAS
JENNIFER L. HENDERSON
116883
LICENSED
PROFESSIONAL ENGINEER
09/18/2020

LAVISH SALON AND BOUTIQUE
901 N. VISTA RIDGE BLVD.
CEDAR PARK, TEXAS

EROSION AND SEDIMENTATION CONTROL DETAILS

JOB:8120ADAYA.005
DATE: 18/09/2020

DRAWN:	AR	PM:	JH
DESIGN:	AR	DM:	JH
PEER:	JS	OTHER:	

REVISIONS:

DELTA	DESCRIPTION	DATE

SHEET:

24 OF 40

CITY PROJECT NUMBER: _____

Date: Sep 18, 2020, 9:24am User ID: smelly
File: T:\clients\projects\2020\8120adaya.005 - lavish salon and boutique\dwg\Sheets\8120ADAYA.005-DETAILS.dwg

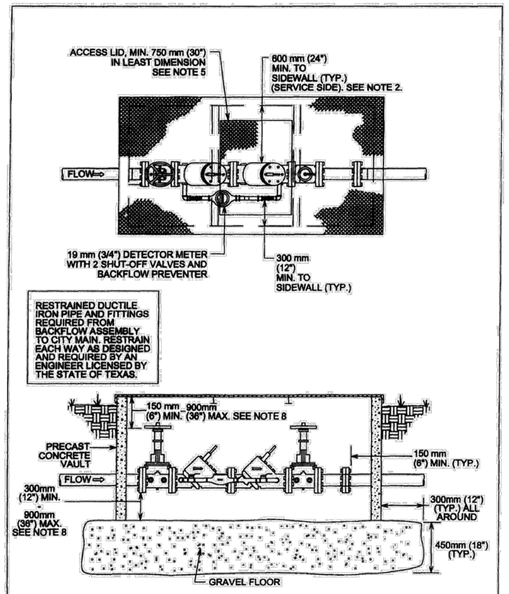

CITY OF AUSTIN WATER AND WASTEWATER UTILITY	STANDARD FIRE LINE INSTALLATION WITHOUT MASTER METER	
Kathi K Flowers 8/31/2011	THE ARCHITECT/ENGINEER ASSUMES RESPONSIBILITY FOR APPROPRIATE USE OF THIS STANDARD.	STANDARD NO. 520S-19C 1 OF 2

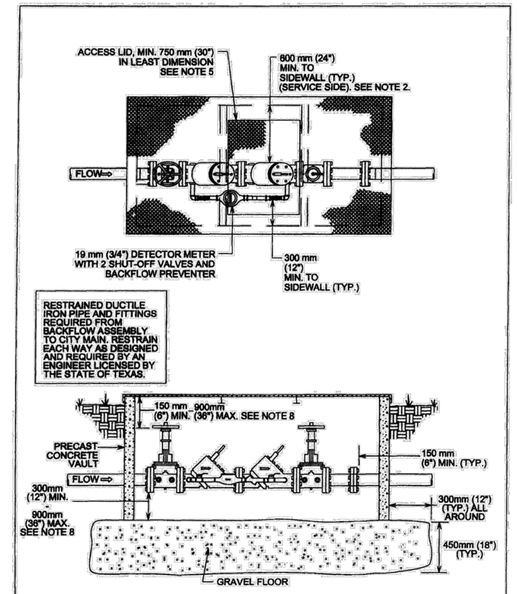

CITY OF AUSTIN WATER AND WASTEWATER UTILITY	STANDARD FIRE LINE INSTALLATION WITHOUT MASTER METER	
Kathi K Flowers 8/31/2011	THE ARCHITECT/ENGINEER ASSUMES RESPONSIBILITY FOR APPROPRIATE USE OF THIS STANDARD.	STANDARD NO. 520S-19C 1 OF 2

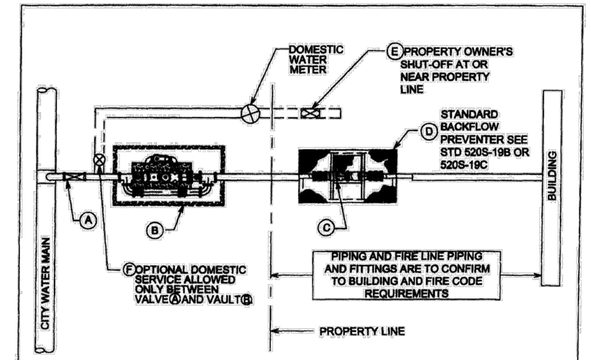

MATERIALS:

(A) TAPPING, RESTRAINED OR FLANGED VALVE (GATE, IRON BODY WITH MJ OUTLET). SEE SPL WW-243, WW-27, WW-27A, AND/OR WW-27B.
(B) FIRELINE OR MASTER METER, SEE STD. DETAIL 520S-17.
(C) CUSTOMER'S BACKFLOW PREVENTION ASSEMBLY AS REQUIRED BY CROSS CONNECTION ORDINANCES. SEE SPL WW-293 OR APPROVEL EQUAL.
(D) VAULT AND ACCESS DOOR SHALL BE PER SPL WW-298 OR SPL WW-614, RESPECTIVELY, OR APPROVED EQUAL. SEE STD. DETAIL 520S-19B OR 19C. VAULT SHALL NOT BE LOCATED IN A TRAFFIC AREA.
(E) CUSTOMER'S SHUT-OFF VALVE ON DOMESTIC WATER LINE.
(F) DOMESTIC WATER SERVICE LINE VALVE.

NOTES:

1. FIRE LINE SHALL BE A MINIMUM OF 150 mm (6") & GREATER THAN OR EQUAL TO METER SIZE IN THE STREET RIGHT-OF-WAY. PLANS SHALL BE PREPARED BY A LICENSED ENGINEER.
2. ALL BURIED PIPE SHALL BE WRAPPED COMPLETELY WITH A MINIMUM OF 0.2 mm (8 MIL) POLYETHYLENE FILM.
3. PIPING AND TUBING IN STREET RIGHT-OF-WAY SHALL BE BEDDED IN GRANULAR MATERIALS AS REQUIRED BY SECTION 510.3 (14) OF THE CITY OF AUSTIN STANDARD SPECIFICATIONS: BACKFILL ABOVE GRANULAR BEDDING AS REQUIRED BY SECTION 510.3 (25).
4. FOR STD. DETAILS 520S-19A, 19B, AND 19C, MASTER METER MEANS METER FOR FIRE AND DOMESTIC SERVICE.
5. THE TOP OF THE METER VAULT SHALL BE AT AN ELEVATION SUCH THAT THE SURROUNDING GROUND SLOPES AWAY FROM THE VAULT. ADDITIONAL DRAINAGE CONSIDERATION SUCH AS CONNECTION OF VAULT TO STORM SEWER, LATERAL DRAIN LINES FROM GRAVEL BED OR OTHER MEANS SHALL BE REQUIRED IF CONDITIONS CAUSE WATER TO COLLECT IN VAULT.

CITY OF AUSTIN AUSTIN WATER UTILITY	STANDARD FIRE LINE INSTALLATION WITH OR WITHOUT MASTER METER	
Kathi K Flowers 8/31/2011	THE ARCHITECT/ENGINEER ASSUMES RESPONSIBILITY FOR APPROPRIATE USE OF THIS STANDARD.	STANDARD NO. 520S-19A

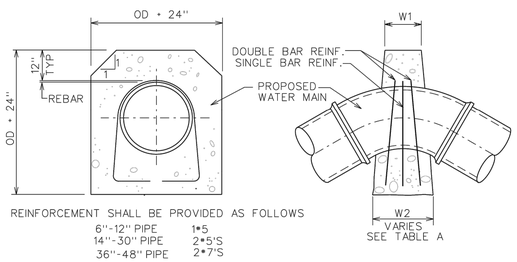

REINFORCEMENT SHALL BE PROVIDED AS FOLLOWS

6"-12" PIPE	1*5
14"-30" PIPE	2*5'S
36"-48" PIPE	2*7'S

VERTICAL DOWN BEND

TABLE A
UPWARD THRUST GRAVITY BLOCKS

PIPE DIA.	MIN. TOP WIDTH W1	ANGLE (degrees)	BOTTOM WIDTH-W2 (in)
6"	6"	0-5	NOTE 2
		5-15	24
		15-25	48
		> 25	NOTE 1
8"	6"	0-5	NOTE 2
		5-9	30
		9-15	36
		>15	NOTE 1
12"	6"	0-5	NOTE 2
		5-15	48
		>15	NOTE 1
16"	12"	0-5	NOTE 2
		5-10	60
		10-15	96
		> 15	NOTE 1
24" THRU 36" DIA.		>5.0	NOTE 1
42" THRU 48" DIA.		>3.0	NOTE 1

NOTES:

1- FOR ANGLES GREATER THAN THOSE INDICATED RESTRAINED JOINTS SHALL BE INSTALLED

2- FOR JOINT DEFLECTIONS LESS THAN 5 DEGREES, NO HORIZONTAL OR VERTICAL THRUST RESTRAINT IS REQUIRED FOR PIPES LESS THAN 42" IN DIAMETER.

THRUST BLOCK DESIGN AS FOLLOWS

A. PRESSURE OF 150 P.S.I. (ACTUAL IF HIGHER) + 50 % SURGE ALLOWANCE

B. MAXIMIM SOIL BEARING SEE TABLE BELOW

SOIL TYPES	PRESSURE
LOOSE OR SPONGY SOIL	1500 Lb/Sq.Ft.
UNDISTURBED SOIL, CALICHE	2000 Lb/Sq.Ft.
LIMESTONE ROCK	4000 Lb/Sq.Ft.

CITY OF AUSTIN WATER AND WASTEWATER UTILITY	CONCRETE THRUST BLOCKING	
RECORD COPY SIGNED BY JAMES E. THOMPSON 2/11/86 ADOPTED	THE ARCHITECT/ENGINEER ASSUMES RESPONSIBILITY FOR APPROPRIATE USE OF THIS STANDARD.	STANDARD NO. 510-6 1 OF 2

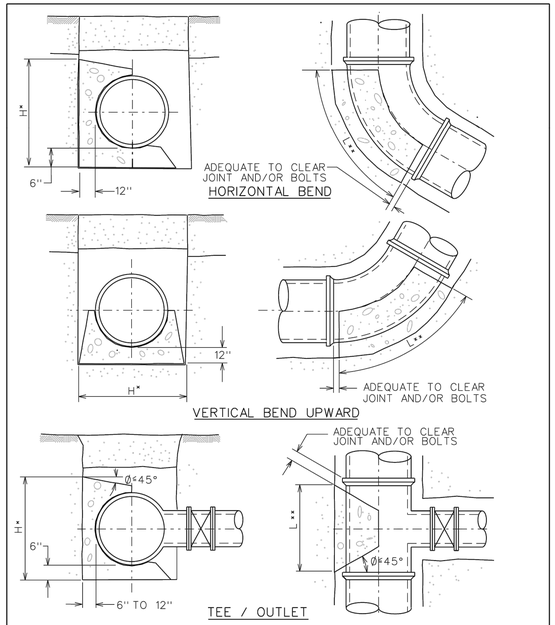

* THE DIMENSION FOR "H" MUST BE GREATER THAN DIAMETER OF THE PIPE
** LENGTH "L" ALONG THE BEND MUST BE GREATER THAN "H" AND LESS THAN 2 TIMES "H"

CITY OF AUSTIN WATER AND WASTEWATER UTILITY	CONCRETE THRUST BLOCKING	
RECORD COPY SIGNED BY JAMES E. THOMPSON 2/11/86 ADOPTED	THE ARCHITECT/ENGINEER ASSUMES RESPONSIBILITY FOR APPROPRIATE USE OF THIS STANDARD.	STANDARD NO. 510-6 2 OF 2

NON-PAVED SURFACE:

(A) PROVIDE 6" OF TOPSOIL AND REVEGETATE

(B) PROVIDE COMPACTED BACKFILL IN SITU TRENCH MATERIAL FREE OF ROCK AND CLODS GREATER THAN 4", COMPACTED IN 6" LIFTS. COMPACTION TO 95% IN R.O.W. AND IN OR NEAR FLOOD PLAIN. OTHER LOCATIONS TO BE 85% (SEE SPEC. ITEM 510)

PROPOSED PAVED SURFACE:

SUBGRADE PREP, FLEXIBLE BASE AND H.M.A.C. PER PAVEMENT PLANS, UNDER SEPARATE PROCEDURE

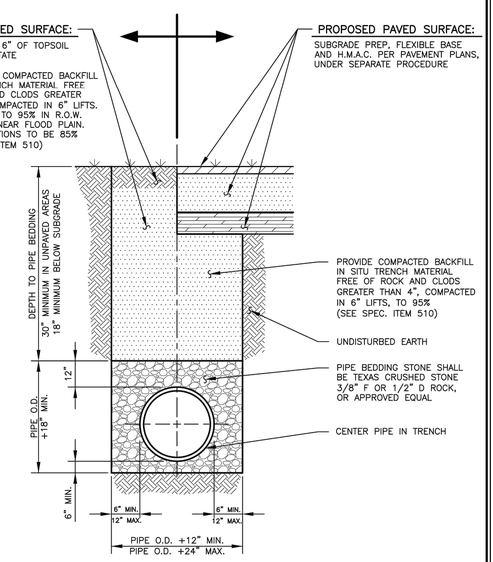

NOTE:

1. ALL TRENCHING AND TRENCH SAFETY SHALL COMPLY WITH APPLICABLE FEDERAL, STATE AND LOCAL REGULATIONS.

RECORD SIGNED COPY ON FILE AT U&ES DEPARTMENT APPROVED 03-01-18 DATE THE ARCHITECT/ENGINEER ASSUMES RESPONSIBILITY FOR THE APPROPRIATE USE OF THIS DETAIL. (NOT TO SCALE)	CITY OF ROUND ROCK WATERLINE BEDDING AND SURFACE REPAIR DETAIL (NON-PAVED & PROPOSED PAVED SURFACE)	DRAWING NO: WT-08 ROUND ROCK TEXAS

M&S ENGINEERING
ELECTRICAL | CIVIL | STRUCTURAL | MEP
TXENG FIRM # F-13394 | TBPELS FIRM #10169800
WWW.MSENGR.COM | (830) 228-5446

STATE OF TEXAS
JENNIFER L. HENDERSON
116883
LICENSED
PROFESSIONAL ENGINEER
09/18/2020

LAVISH SALON AND BOUTIQUE
901 N. VISTA RIDGE BLVD.
CEDAR PARK, TEXAS

WATER DETAILS

JOB:8120ADAYA.005			
DATE: 18/09/2020			
DRAWN:	AR	PM:	JH
DESIGN:	AR	DM:	JH
PEER:	JS	OTHER:	

REVISIONS:

DELTA	DESCRIPTION	DATE

SHEET:

25 OF 40

CITY PROJECT NUMBER: _____

Date: Sep 18, 2020, 9:24am User ID: amelly
File: T:\active projects\2020\08 georgetown general civil\8120adaya.005 - lavish salon and boutique\dwg\Sheets\8120ADAYA.005-DETAILS.dwg

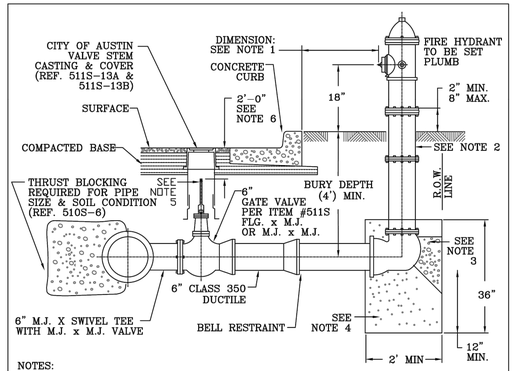

NOTES:

1. IN RIGHT OF WAY AREAS, PLACE FH AT ROW LINE. HYDRANTS ARE NOT TO BE PLACED IN SIDEWALK AREAS OR WITHIN 6' OF A CURB. WHERE POSSIBLE, PLACE VALVE IN PAVEMENT. IF NOT POSSIBLE, PLACE A VALVE BOX PAD (DETAIL FROM CP WEBSITE) AROUND VALVE. NO VALVES ARE TO BE PLACED IN CONFLICT WITH PROPOSED/EXISTING CURBS OR GUTTERS.
2. FOR BURY DEPTHS GREATER THAN 5', ONE BARREL EXTENSION NOT EXCEEDING 2 FOOT IN LENGTH SHALL BE INSTALLED DIRECTLY BELOW THE FIRE HYDRANT.
3. ALL PIPE AND FITTINGS SHALL HAVE JOINT RESTRAINT FROM MAIN TO FIRE HYDRANT, ALL INCLUSIVE. THRUST BLOCKING SHALL BE CLASS A CONCRETE WITH A MINIMUM 1.5 SQUARE FOOT SURFACE AREA AGAINST PIPE. DO NOT BLOCK DRAIN HOLES.
4. CRUSHED STONE OR GRAVEL SHALL BE PLACED AROUND THE BOTTOM OF THE HYDRANT FOR A RADIUS OF AT LEAST 12" AND EXTEND AT LEAST 12" ABOVE THE OUTLET. DO NOT BLOCK DRAIN HOLES.
5. WELD SOCKET 2-½" X 2" DEEP TO 1" SCH. 40 ROUND STEM EXTENSION, FITTED ON OPERATING NUT. SCH. 80 FOR LENGTHS OVER 10'.
6. VALVE EXTENSIONS ARE REQUIRED ON ALL VALVES THAT EXCEED 3' DEEP FROM FINISHED GRADE. VALVE EXTENSIONS SHALL BE PLACED SUCH THAT THE EXTENSION NUT IS BETWEEN 18" AND 24" FROM FINISHED GRADE.
7. VALVE SPECIFICATION PER CITY OF AUSTIN STANDARD SPECIFICATION ITEM NO. 511.

CITY OF CEDAR PARK	STANDARD FIRE HYDRANT INSTALLATION	
ISSUED: JULY 8, 2014	THE ENGINEER ASSUMES RESPONSIBILITY FOR APPROPRIATE USE OF THIS STANDARD.	

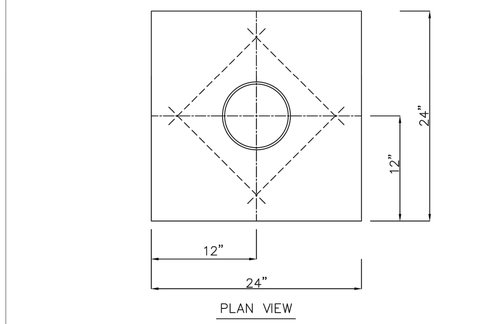

NOTES:
1. FOR USE ONLY OUTSIDE PAVED AREAS.
2. USE CLASS "A" CONCRETE.

CITY OF CEDAR PARK PUBLIC WORKS DEPARTMENT	VALVE BOX PAD	
	ADOPTED: 10/23/00	
	SCALE: NTS	
	INITIAL: ESR	

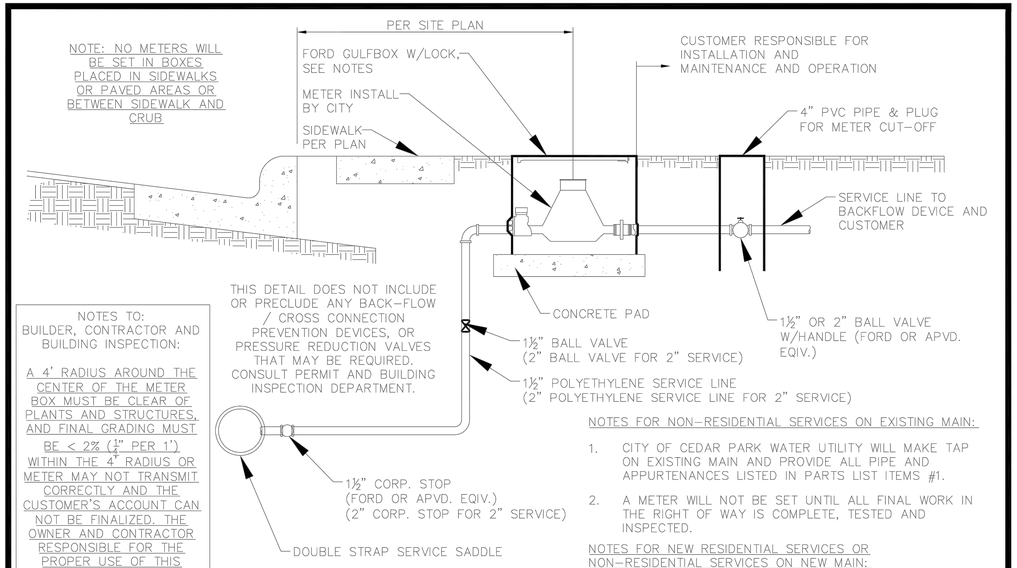

NOTES TO: BUILDER, CONTRACTOR AND BUILDING INSPECTION:

A 4' RADIUS AROUND THE CENTER OF THE METER BOX MUST BE CLEAR OF PLANTS AND STRUCTURES, AND FINAL GRADING MUST BE < 2% (¼" PER 1') WITHIN THE 4' RADIUS OR METER MAY NOT TRANSMIT CORRECTLY AND THE CUSTOMER'S ACCOUNT CAN NOT BE FINALIZED. THE OWNER AND CONTRACTOR RESPONSIBLE FOR THE PROPER USE OF THIS DETAIL. THE UTILITY MUST REJECT ANY INSTALL REQUEST WHERE COMMUNICATION CAN NOT BE ACHIEVED.

THIS DETAIL DOES NOT INCLUDE OR PRECLUDE ANY BACK-FLOW / CROSS CONNECTION PREVENTION DEVICES, OR PRESSURE REDUCTION VALVES THAT MAY BE REQUIRED. CONSULT PERMIT AND BUILDING INSPECTION DEPARTMENT.

IRRIGATION METERS SHALL NOT "LOOP" TO OTHER IRRIGATION METERS

CITY WILL DRILL A HOLE IN LID FOR ANTENNA.

NOTES FOR NON-RESIDENTIAL SERVICES ON EXISTING MAIN:

1. CITY OF CEDAR PARK WATER UTILITY WILL MAKE TAP ON EXISTING MAIN AND PROVIDE ALL PIPE AND APPURTENANCES LISTED IN PARTS LIST ITEMS #1.
2. A METER WILL NOT BE SET UNTIL ALL FINAL WORK IN THE RIGHT OF WAY IS COMPLETE, TESTED AND INSPECTED.

NOTES FOR NEW RESIDENTIAL SERVICES OR NON-RESIDENTIAL SERVICES ON NEW MAIN:

1. THE CONTRACTOR WILL PROVIDE ALL PARTS, FITTINGS, PIPE, BOXES AND APPURTENANCES SHOWN.
2. THE CONTRACTOR SHALL PERFORM ALL TAPS.
3. ALL TAPS SHALL BE COMPLETE, FLUSHED AND OPEN TO THE CURB STOP PRIOR TO MAIN TESTING.

CITY OF CEDAR PARK DEPARTMENT OF PUBLIC WORKS VER: 170724	STANDARD DETAIL FOR 1½" OR 2" WATER METER SERVICE

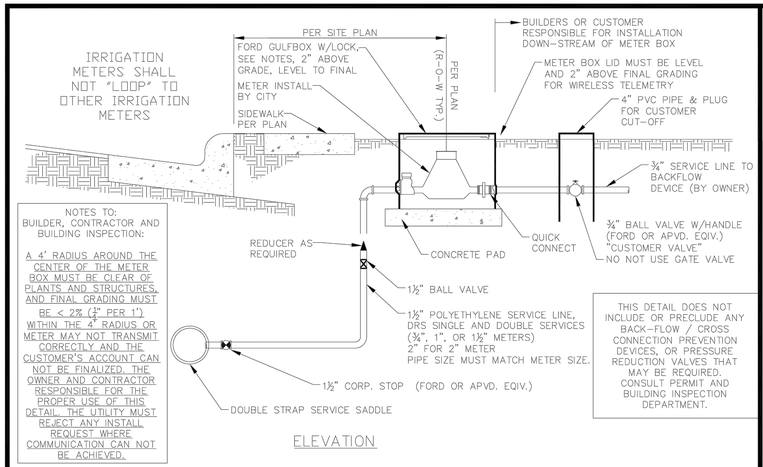

NOTES TO: BUILDER, CONTRACTOR AND BUILDING INSPECTION:

A 4' RADIUS AROUND THE CENTER OF THE METER BOX MUST BE CLEAR OF PLANTS AND STRUCTURES, AND FINAL GRADING MUST BE < 2% (¼" PER 1') WITHIN THE 4' RADIUS OR METER MAY NOT TRANSMIT CORRECTLY AND THE CUSTOMER'S ACCOUNT CAN NOT BE FINALIZED. THE OWNER AND CONTRACTOR RESPONSIBLE FOR THE PROPER USE OF THIS DETAIL. THE UTILITY MUST REJECT ANY INSTALL REQUEST WHERE COMMUNICATION CAN NOT BE ACHIEVED.

THIS DETAIL DOES NOT INCLUDE OR PRECLUDE ANY BACK-FLOW / CROSS CONNECTION PREVENTION DEVICES, OR PRESSURE REDUCTION VALVES THAT MAY BE REQUIRED. CONSULT PERMIT AND BUILDING INSPECTION DEPARTMENT.

NOTES FOR NON-RESIDENTIAL SERVICES ON EXISTING MAIN:

1. CITY OF CEDAR PARK WATER UTILITY WILL MAKE TAP ON EXISTING MAIN AND PROVIDE ALL PIPE AND APPURTENANCES LISTED IN PARTS LIST ITEMS #1.
2. A METER WILL NOT BE SET UNTIL ALL FINAL WORK IN THE RIGHT OF WAY IS COMPLETE, TESTED AND INSPECTED.

NOTES FOR NEW RESIDENTIAL SERVICES OR NON-RESIDENTIAL SERVICES ON NEW MAIN:

1. THE CONTRACTOR WILL PROVIDE ALL PARTS, FITTINGS, PIPE, BOXES AND APPURTENANCES SHOWN.
2. THE CONTRACTOR SHALL PERFORM ALL TAPS.
3. ALL TAPS SHALL BE COMPLETE, FLUSHED AND OPEN TO THE CURB STOP PRIOR TO MAIN TESTING.
4. DELIVER "QUICK CONNECTS" TO INSPECTOR AT FINAL WALK THROUGH FOR RESIDENTIAL CONSTRUCTION WHERE METERS ARE TO BE SET AFTER SUBDIVISION ACCEPTANCE.

PART NUMBERS:
SINGLE FORD METER BOX (12" x 8") (¾" TUBING) G148-233

DUAL FORD METER BOX (14¾" x 12") (1" TUBING) DG248-243

1" FORD METER BOX (SINGLE) (15"ø) (1" TUBING) YL111-444

PARTS LIST:

1. FOR ¾", 1", OR 1½" FORD CORPORATION STOP
   FB1000-6-G-NL, 1½" POLY-HDPE DR9, 1½" BALL VALVE WITH A C84-66-G COUPLING ON INLET SIDE. PROVIDE FORD FITTINGS AS NECESSARY.
2. FOR ¾" SERVICES, ON TOP OF THE BALL VALVE USE A 1½" x ¾" REDUCING BUSHING & COUPLING:
   ¾" MIP x ¾" GRIP JOINT: C84-33-G
3. FOR 1" SERVICES, ON TOP OF THE BALL VALVE USE A 1½" X 1" REDUCING BUSHING & COUPLING:
   1" MIP x 1" GRIP JOINT: C84-44-G
4. ALL METER PARTS BY FORD METER BOX COMPANY OR PRE-APPROVED EQUIVALENT.
5. ALL BRASS VALVES & FITTINGS.
6. USE STAINLESS INSERT STIFFENERS IN POLY TUBING.
7. "G" FOLLOWING THE PART NUMBER DENOTES GRIP JOINT.
8. FOR NEW WATER MAINS, CONTRACTOR RESPONSIBLE FOR PARTS & INSTALLATION TESTING.
9. CITY WILL DRILL HOLE IN LID FOR METER ANTENNA.

NOTE: NO METERS WILL BE SET IN BOXES PLACED IN SIDEWALKS OR PAVED AREAS

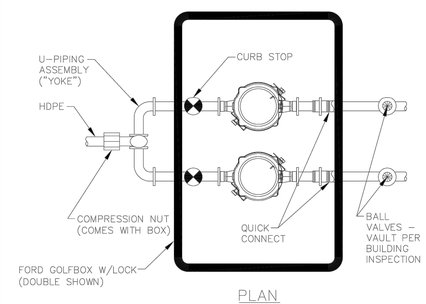

CITY OF CEDAR PARK DEPARTMENT OF PUBLIC WORKS VER: 170724	STANDARD DETAIL FOR ¾" OR 1" WATER METER SERVICE

M&S ENGINEERING
ELECTRICAL | CIVIL | STRUCTURAL | MEP
TXENG FIRM # F-1394 | TBPELS FIRM #10169800
WWW.MSENGR.COM | (830) 228-5446

STATE OF TEXAS
JENNIFER L. HENDERSON
116883
LICENSED
PROFESSIONAL ENGINEER
09/18/2020

LAVISH SALON AND BOUTIQUE
901 N. VISTA RIDGE BLVD.
CEDAR PARK, TEXAS

WATER DETAILS

JOB:8120ADAYA.005
DATE: 18/09/2020

DRAWN: AR	PM: JH
DESIGN: AR	DM: JH
PEER: JS	OTHER:

REVISIONS:

DELTA	DESCRIPTION	DATE

SHEET:
26 OF 40

CITY PROJECT NUMBER: _____

Date: Sep 18, 2020, 9:24am User ID: smilly
File: T:\civil projects\2020\8120 gardgreen general civil\8120adaya.005 - lavish salon and boutique\dwg\Sheets\8120ADAYA.005-DETAILS.dwg

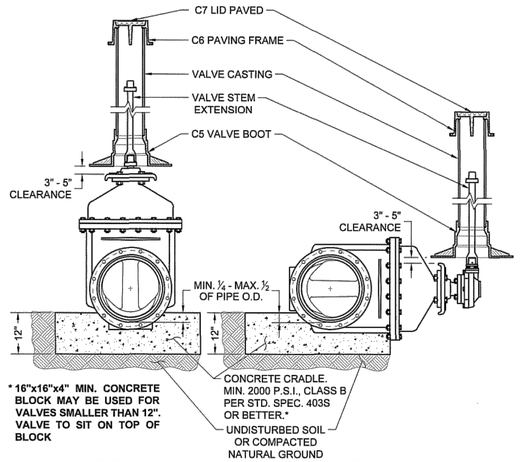

VERTICAL VALVE

HORIZONTAL VALVE

ONLY TO BE USED WHEN CALLED OUT ON THE DRAWINGS.

NOTES:

1. WELD SOCKET 2½" x 2" DEEP TO 1" SCH. 40 CARBON STEEL ROUND STEM EXTENSION, FITTED ON OPERATING NUT, [SCH. 80 FOR LENGTHS OVER 10'.]
2. VALVE CASTING SHALL BE 6" DI PIPE WITH BELL OR COLLAR CENTERED OVER VALVE BOOT.
3. NUT AT TOP OF VALVE EXTENSION ROD SHALL BE SQUARE 2" LONG WELDED TO TOP OF ROD.
4. VALVE STEM EXTENSIONS ARE REQUIRED ON ALL VALVES THAT EXCEED 3' DEEP FROM FINISHED GRADE. VALVE EXTENSIONS SHALL BE PLACED SUCH THAT THE EXTENSION NUT IS BETWEEN 12" AND 18" FROM FINISHED GRADE.

RECLAIMED WATER: ALL RECLAIMED PVC PIPE SHALL BE MANUFACTURED PURPLE PIPE. HDPE PIPE SHALL BE MANUFACTURED WITH PURPLE STRIPES. ALL OTHER PIPE AND APPURTENANCES SHALL BE MANUFACTURED PURPLE IF AVAILABLE. ALL PIPE AND FITTINGS THAT ARE NOT AVAILABLE FROM THE MANUFACTURER IN PURPLE SHALL BE PAINTED PURPLE PER SPL WW-3C. ALL BURIED DI AND CI PIPE AND FITTINGS SHALL ALSO BE WRAPPED IN PURPLE POLYETHYLENE PER SPL WW-27D. ALL COVERS SHALL HAVE "RECLAIMED WATER" CAST INTO THEM.

CITY OF AUSTIN AUSTIN WATER	TYPICAL GATE VALVE 4" - 16"	
Kathi L. Flowers 05/18/2016 ADOPTED	THE ARCHITECT/ENGINEER ASSUMES RESPONSIBILITY FOR APPROPRIATE USE OF THIS STANDARD.	STANDARD NO. 511-AW-01 1 OF 4

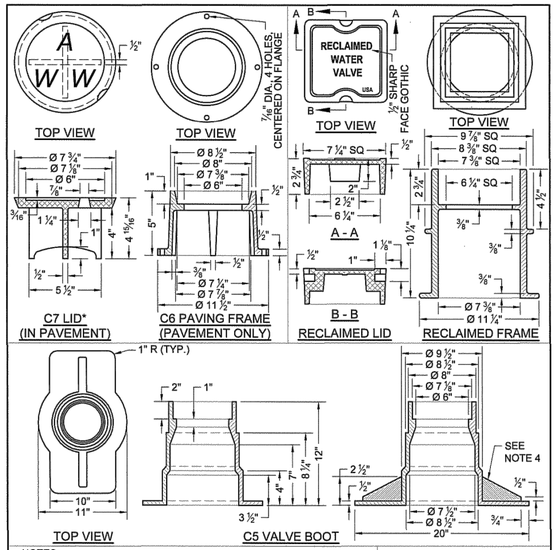

NOTES:

1. MATERIAL SHALL BE GRAY CAST IRON, ASTM A48, GRADE 30B.
2. THE MANUFACTURER'S IDENTIFICATION AND CASTING NUMBER, AND THE COUNTRY WHERE CAST, SHALL BE DISTINCTLY CAST ONTO EACH LID, FRAME, COLLAR AND BASE.
3. DRAFT AND SHRINKAGE ALLOWANCE SHALL BE IN ACCORDANCE WITH NORMAL FOUNDRY PRACTICE.
4. CASTING FINISH BY MANUFACTURER SHALL INCLUDE REMOVAL OF FINS AND FLASHING, AND PAINT WITH BLACK ASPHALT COATING.

WEIGHTS:

C7 LID: 13 LBS
RECLAIMED LID: 15 LBS
C6 FRAME: 23 LBS
RECLAIMED FRAME: 33 LBS
C5 BASE: 78 LBS

* LETTERING SHALL BE 1 ½"
2 PICK BAR SLOTS REQUIRED

CITY OF AUSTIN AUSTIN WATER	TYPICAL GATE VALVE 4" - 16"	
Kathi L. Flowers 05/18/2016 ADOPTED	THE ARCHITECT/ENGINEER ASSUMES RESPONSIBILITY FOR APPROPRIATE USE OF THIS STANDARD.	STANDARD NO. 511-AW-01 2 OF 4

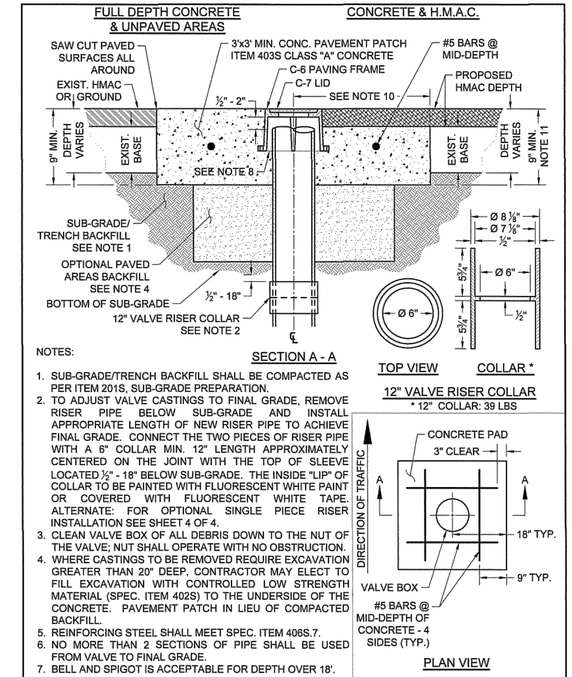

NOTES:

1. SUB-GRADE/TRENCH BACKFILL SHALL BE COMPACTED AS PER ITEM 201S, SUB-GRADE PREPARATION.
2. TO ADJUST VALVE CASTINGS TO FINAL GRADE, REMOVE RISER PIPE BELOW SUB-GRADE AND INSTALL APPROPRIATE LENGTH OF NEW RISER PIPE TO ACHIEVE FINAL GRADE. CONNECT THE TWO PIECES OF RISER PIPE WITH A 6" COLLAR MIN. 12" LENGTH APPROXIMATELY CENTERED ON THE JOINT WITH THE TOP OF SLEEVE LOCATED ½" - 18" BELOW SUB-GRADE. THE INSIDE "LIP" OF COLLAR TO BE PAINTED WITH FLUORESCENT WHITE PAINT OR COVERED WITH FLUORESCENT WHITE TAPE. ALTERNATE: FOR OPTIONAL SINGLE PIECE RISER INSTALLATION SEE SHEET 4 OF 4.
3. CLEAN VALVE BOX OF ALL DEBRIS DOWN TO THE NUT OF THE VALVE; NUT SHALL OPERATE WITH NO OBSTRUCTION.
4. WHERE CASTINGS TO BE REMOVED REQUIRE EXCAVATION GREATER THAN 20" DEEP, CONTRACTOR MAY ELECT TO FILL EXCAVATION WITH CONTROLLED LOW STRENGTH MATERIAL (SPEC. ITEM 402S) TO THE UNDERSIDE OF THE CONCRETE. PAVEMENT PATCH IN LIEU OF COMPACTED BACKFILL.
5. REINFORCING STEEL SHALL MEET SPEC. ITEM 406S.7.
6. NO MORE THAN 2 SECTIONS OF PIPE SHALL BE USED FROM VALVE TO FINAL GRADE.
7. BELL AND SPIGOT IS ACCEPTABLE FOR DEPTH OVER 18'.

CITY OF AUSTIN AUSTIN WATER	TYPICAL GATE VALVE 4" - 16"	
Kathi L. Flowers 05/18/2016 ADOPTED	THE ARCHITECT/ENGINEER ASSUMES RESPONSIBILITY FOR APPROPRIATE USE OF THIS STANDARD.	STANDARD NO. 511-AW-01 3 OF 4

NOTES (CON'T):

8. PAVING FRAME SHALL BE FLUSH WITH THE CONC. PAD AND PLACED ½" - 2" ABOVE RISER PIPE (FRAME SHALL NOT REST ON RISER.)
9. IN UNPAVED AREAS, INSTALL ONE DELINEATOR STAKE IMMEDIATELY ADJACENT TO THE EDGE OF THE CONCRETE PAD. DELINEATOR SHALL BE BLUE FOR POTABLE WATER AND PURPLE FOR RECLAIMED WATER AND SHALL EXTEND AT LEAST 60" ABOVE GROUND. DELINEATORS SHALL HAVE 2" WIDE, WHITE IN COLOR, TYPE I REFLECTIVE TAPE MOUNTED DIAGONALLY AT 12" SPACING ON BOTH SIDES.
10. VALVE SHALL TYPICALLY BE CENTERED IN CONCRETE DIAMOND BUT MAY BE OFFSET WITH A MIN. OF 12" FROM CENTER OF VALVE LID TO EDGE OF CONCRETE IN ALL DIRECTIONS.
11. MIN. TOTAL DEPTH OF ASPHALT PLUS CONC. IS 9" AND MIN. DEPTH OF CONC. PAD SHALL BE 5"

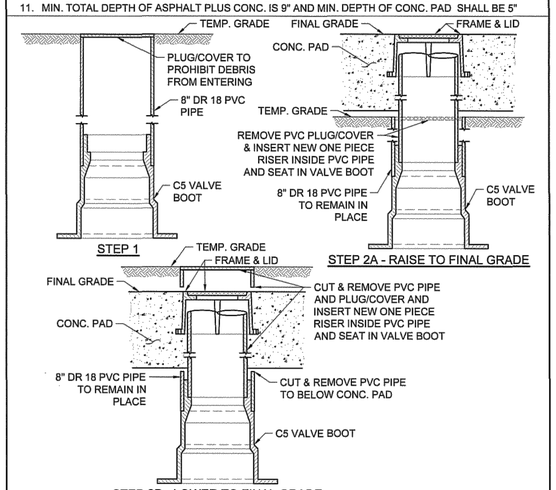

OPTIONAL ONE PIECE VALVE CASTING INSTALLATION

CITY OF AUSTIN AUSTIN WATER	TYPICAL GATE VALVE 4" - 16"	
Kathi L. Flowers 05/18/2016 ADOPTED	THE ARCHITECT/ENGINEER ASSUMES RESPONSIBILITY FOR APPROPRIATE USE OF THIS STANDARD.	STANDARD NO. 511-AW-01 4 OF 4

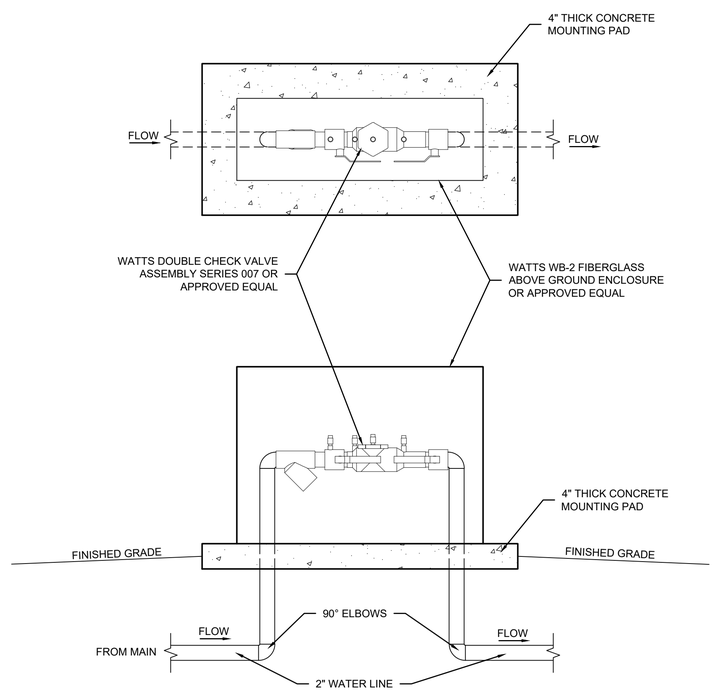

01 DOUBLE CHECK VALVE ASSEMBLY WITH ENCLOSURE
SCALE: N.T.S.

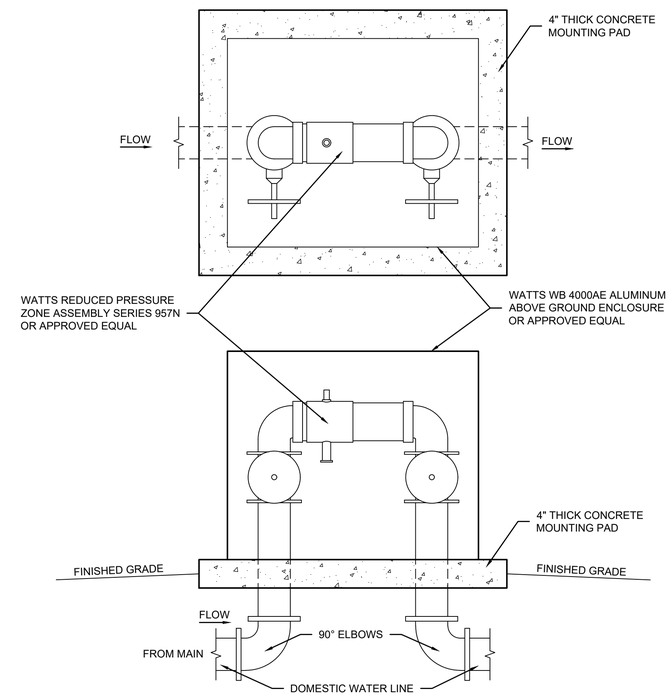

02 REDUCED PRESSURE ZONE VALVE WITH ENCLOSURE
SCALE: N.T.S.

M&S ENGINEERING
ELECTRICAL | CIVIL | STRUCTURAL | MEP
TXENG FIRM # F-13394 | TBPELS FIRM #10169800
WWW.MSENGR.COM | (830) 228-5446

STATE OF TEXAS
JENNIFER L. HENDERSON
116883
LICENSED
PROFESSIONAL ENGINEER
09/18/2020

LAVISH SALON AND BOUTIQUE
901 N. VISTA RIDGE BLVD.
CEDAR PARK, TEXAS

WATER DETAILS

JOB:8120ADAYA.005			
DATE: 18/09/2020			
DRAWN:	AR	PM:	JH
DESIGN:	AR	DM:	JH
PEER:	JS	OTHER:	

REVISIONS:

DELTA	DESCRIPTION	DATE

SHEET:

27 OF 40

CITY PROJECT NUMBER: _____

Date: Sep 18, 2020, 9:24am User ID: smelly
File: T:\active projects\2020\3 georgetown\general civil\8120adaya.005 - lavish salon and boutique\dwg\Sheets\8120ADAYA.005-DETAILS.dwg

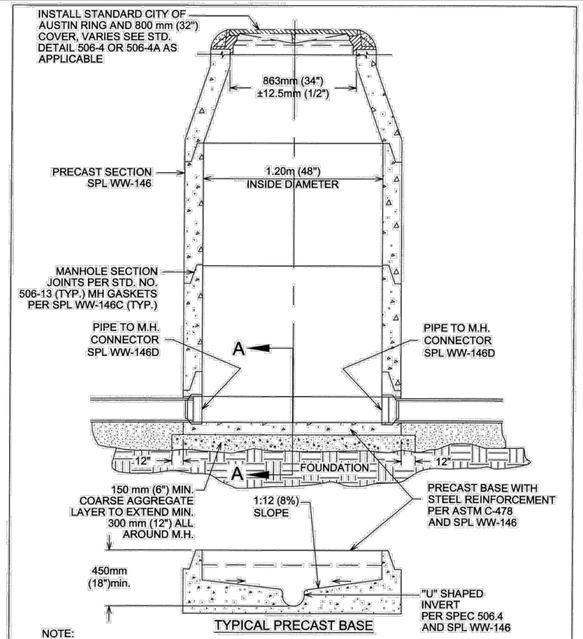

TYPICAL PRECAST BASE

NOTE:
1. THE MANHOLE BASE SHALL BE BEDDED ON 150 mm (6") COARSE AGGREGATE. THE CONTRACTOR SHALL LEVEL AND PLUMB THE BASE PRIOR TO SETTING THE PRECAST MANHOLE RISER SECTIONS ON THE PRECAST CONCRETE BASE.
2. MH FOUNDATION SHALL MEET OR EXCEED STD. SPEC. 506.5B.

CITY OF AUSTIN AUSTIN WATER UTILITY	WASTEWATER MANHOLE ON PRECAST BASE	
Kathi L. Flowers 8/31/2011	THE ARCHITECT/ENGINEER ASSUMES RESPONSIBILITY FOR APPROPRIATE USE OF THIS STANDARD	STANDARD NO. 506S-10

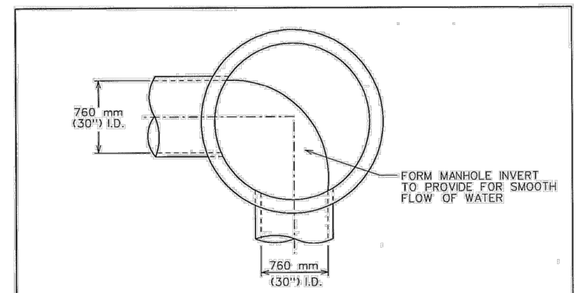

TYPICAL MANHOLE AT ANGLE IN STORM DRAIN

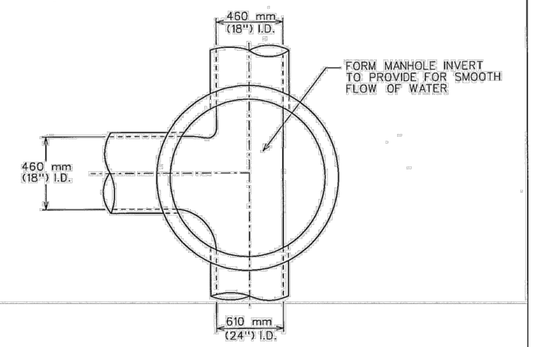

TYPICAL JUNCTION MANHOLE

CITY OF AUSTIN DEPARTMENT OF WATERSHED PROTECTION AND DEVELOPMENT REVIEW	MANHOLE INVERT PLAN	
George E. Lamoth 2/14/07 ADOPTED	THE ARCHITECT/ENGINEER ASSUMES RESPONSIBILITY FOR APPROPRIATE USE OF THIS STANDARD.	STANDARD NO. 506S-1

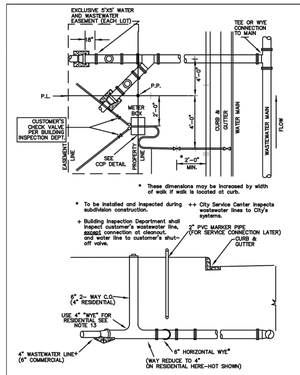

CITY OF CEDAR PARK ENGINEERING DEPARTMENT	STANDARD CONNECTION DETAIL FOR WASTE WATER SERVICE ADOPTED: 9-11-08 SCALE: NTS INITIAL: DRM

1. UTILITY CONTRACTOR LEAVE ONE 6" HORIZONTAL WYE AS SHOWN FOR DOUBLE SERVICE CONNECTION–OPENINGS PLUGGED. FOR DOUBLE SERVICE AND NEW INSTALLS OF METER BOX, WATER PIPE, FITTINGS AND VALVE TO INLET SIDE OF METER(S) IN ACCORDANCE WITH INFORMATION SHOWN ON APPLICABLE STANDARD DETAIL SHEET. INSTALLATION TO BE COMPLETED DURING SUBDIVISION CONSTRUCTION–INSPECTION BY WATER AND WASTEWATER CONSTRUCTION INSPECTION PERSONNEL.

2. CUSTOMER IS RESPONSIBLE FOR METER BOX AND PIPING SYSTEMS UNTIL METER IS INSTALLED AND WASTEWATER IS CONNECTED. ANY MISSING OR DAMAGED PARTS SHALL BE REINSTALLED BY CUSTOMER WHO SHALL GUARANTEE, FOR A PERIOD OF ONE (1) YEAR FROM DATE OF ACCEPTANCE, THAT CONNECTIONS TO CITY SYSTEMS ARE FREE FROM DEFECTS IN WORKMANSHIP OR MATERIALS. CUSTOMER HAS THE RESPONSIBILITY TO ASSURE THAT ALL VALVES AND STOPS, METER BOX AND VERTICAL WYE REMAIN CLEAR OF SIDEWALKS AND OTHER OBSTRUCTIONS

3. CITY OF CEDAR PARK ACTIVITY IS LIMITED TO INSTALLATION OF THE WATER METER AND INSPECTION OF CONNECTIONS TO THE CITY'S WATER AND WASTEWATER SYSTEMS FOR MAINTENANCE PURPOSES. THE CITY'S RESPONSIBILITY ENDS AT THE METER BOX AND AT THE WASTEWATER CONNECTION TO THE HORIZONTAL WYE.

4. ALL WASTEWATER SERVICE LATERALS SHALL SLOPE 1 PERCENT (1/8 INCH PER FOOT) MINIMUM TO MAIN.

5. PIPING IN STREET RIGHT–OF–WAY AND IN EASEMENT AREAS SHALL BE BEDDED WITH MATERIALS REQUIRED BY CITY OF AUSTIN SPECIFICATIONS; AND TO HAVE A MINIMUM COVER BELOW FINAL GRADE OF 42 INCHES. THE ENGINEERING DEPARTMENT MUST SPECIFICALLY APPROVE ANY EXCEPTION.

6. CUSTOMER TO PROVIDE CLEANOUT WITHIN 5' P.U.E.

7. CONTRACTOR SHALL PROVIDE ALL MATERIALS & LABOR UNLESS DIRECTED OTHERWISE BY THE CITY UTILITY INSPECTOR.

8. FOR COMMERCIAL SITES, COORDINATE ALL W/WW TAPS WITH UTILITY INSPECTOR. 512–401–5550.

9. DO NOT USE DOUBLE WYE OR 4"X6"X4" WYE. SINGLE SERVICES SHALL NOT HAVE ANY WYE INSTALLED.

10. ALL WW FITTINGS UPSTREAM OF THE SERVICE LATERAL FROM THIS POINT TO BE SOLVENT WELD. DO NOT USE GASKET–TYPE OR PUSH ON FITTINGS FOR SERVICE LATERALS.

11. GENERAL CONTRACTOR/HOME OR COMMERCIAL BUILDER/PLUMBER SHALL INSTALL AND MAINTAIN A PLUG ON THE CITY SIDE OF THE SERVICE LATERAL AT ALL TIMES UNTIL FINISHED DEVELOPMENT IS APPROVED AND CONNECTED TO THE WASTEWATER SYSTEM.

12. FOR COMMERCIAL PROJECTS, THE 6" 2–WAY CLEAN OUT WILL BE CONSIDERED THE INSPECTION PORTAL AND CONTROL POINT FOR THE PROPERTY. HOWEVER, THE INDUSTRIAL PRE–TREATMENT PROGRAM HAS THE AUTHORITY TO REQUIRE ADDITIONAL CONTROL POINTS AND ADDITIONAL LOCATIONS AS REQUIRED BY ARTICLE 18.06.

13. RESIDENTIAL TO USE 4"(MIN) VERTICAL WYE FITTING FACING THE MAIN IN PLACE OF THE 6" 2–WAY CO REQUIRED BY THE IPT PROGRAM AND COMMERCIAL CODE.

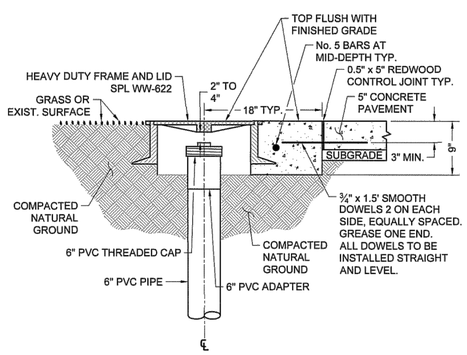

*** CLEAN-OUTS MAY NOT BE PLACED IN PAVED AREAS - I.E. SIDEWALKS, DRIVEWAYS, OR PARKING LOTS, AND MUST BE LOCATED A MINIMUM OF 6" FROM ALL PAVED AREAS.**

NOTES:

1. SUB-GRADE SHALL BE COMPACTED AS PER STD. SPEC. 201S, SUB-GRADE PREPARATION.
2. REINFORCING STEEL SHALL MEET ITEM 406S, REINFORCING STEEL.
3. CONCRETE SHALL MEET ITEM 403S CLASS "A".
4. ALL PVC SHALL BE SDR 26.

CLEAN-OUT FRAME AND LID

CITY OF AUSTIN AUSTIN WATER	WASTEWATER CLEAN-OUT FRAME AND LID	
Kathi L. Flowers 05/18/2016 DATE	THE ARCHITECT/ENGINEER ASSUMES RESPONSIBILITY FOR APPROPRIATE USE OF THIS STANDARD.	STANDARD NO. 520-AW-03 1 OF 2

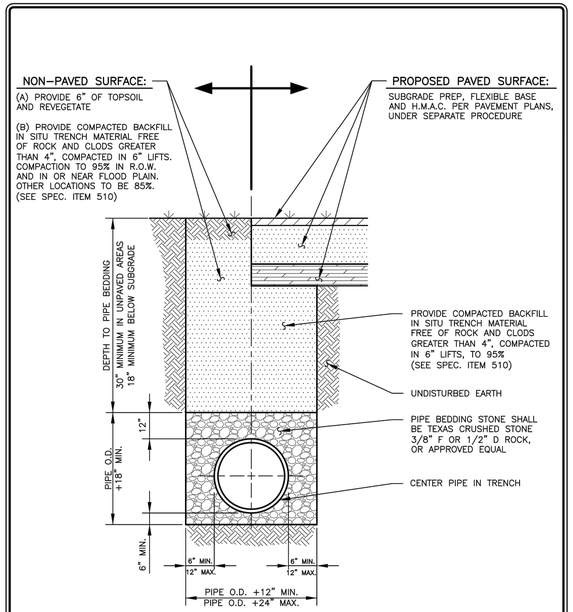

NOTE:

ALL TRENCHING AND TRENCH SAFETY SHALL COMPLY WITH APPLICABLE FEDERAL, STATE AND LOCAL REGULATIONS.

RECORD SIGNED COPY ON FILE AT U&ES DEPARTMENT APPROVED 03-01-18 DATE THE ARCHITECT/ENGINEER ASSUMES RESPONSIBILITY FOR THE APPROPRIATE USE OF THIS DETAIL. (NOT TO SCALE)	CITY OF ROUND ROCK WASTEWATER LINE BEDDING AND SURFACE REPAIR DETAIL (NON–PAVED & PROPOSED PAVED SURFACE)	DRAWING NO: WW–18 ROUND ROCK TEXAS

M&S ENGINEERING
ELECTRICAL | CIVIL | STRUCTURAL | MEP
TXENG FIRM # F-13394 | TBPELS FIRM #10169800
WWW.MSENGR.COM | (830) 228-5446

STATE OF TEXAS
JENNIFER L. HENDERSON
116883
LICENSED
PROFESSIONAL ENGINEER
09/18/2020

LAVISH SALON AND BOUTIQUE
901 N. VISTA RIDGE BLVD.
CEDAR PARK, TEXAS

WASTEWATER DETAILS

JOB:8120ADAYA.005
DATE: 18/09/2020

DRAWN: AR	PM: JH
DESIGN: AR	DM: JH
PEER: JS	OTHER:

REVISIONS:

DELTA	DESCRIPTION	DATE

SHEET:

28 OF 40

CITY PROJECT NUMBER: _____

Date: Sep 18, 2020, 9:24am User ID: smelly
File: T:\active projects\2020\3 georgetown general civil\8120adaya.005 - lavish salon and boutique\dwg\Sheets\8120ADAYA.005-DETAILS.dwg

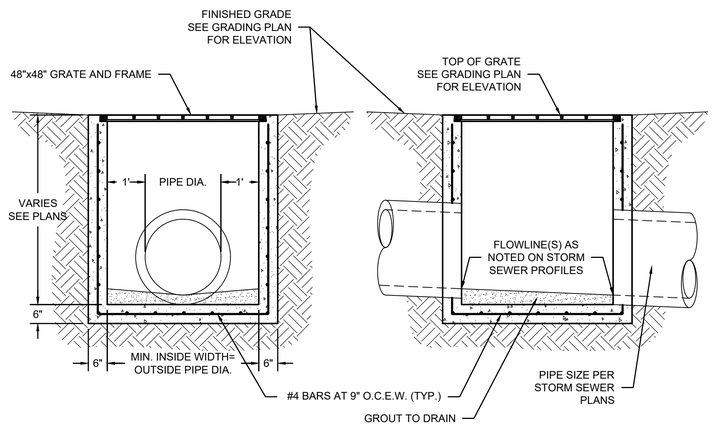

01 4'X4' GRATE INLET

SCALE: 1/2" = 1'-0"

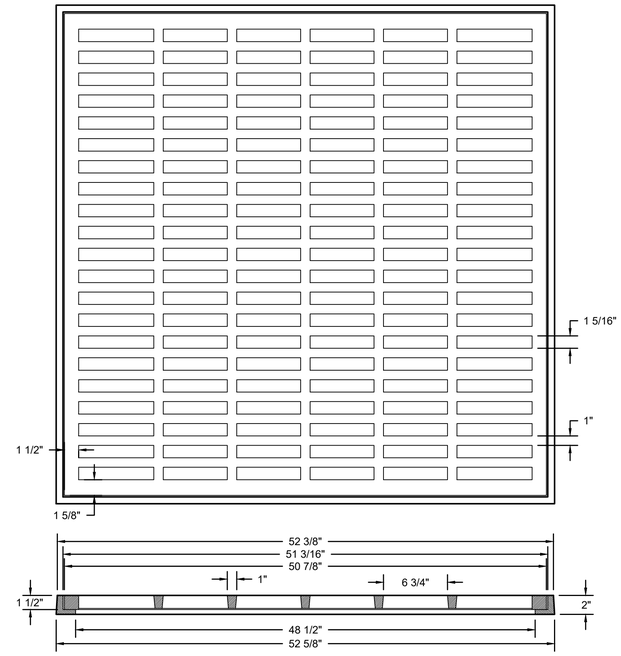

GRATE SHALL BE RATED TO SUPPORT A MINIMUM OF 90,000 LBS.

02 48"X48" FRAME AND GRATE

SCALE: 1 1/2" = 1'-0"

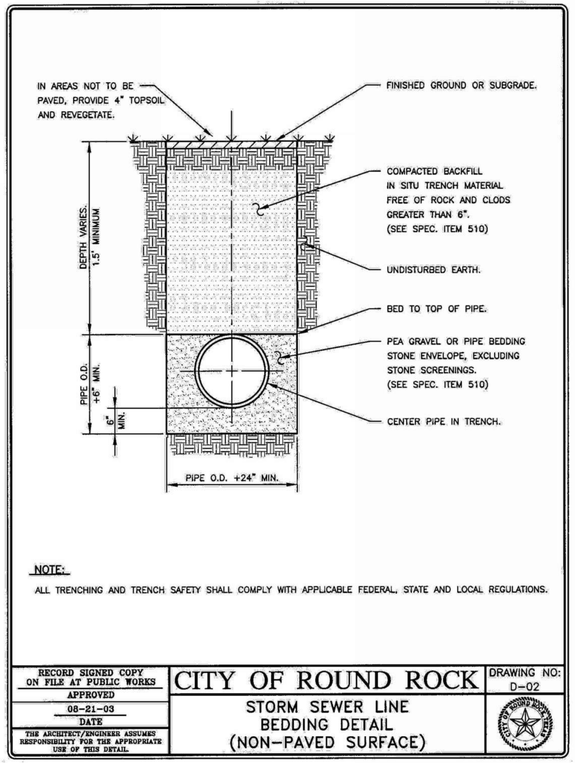

NOTE:

ALL TRENCHING AND TRENCH SAFETY SHALL COMPLY WITH APPLICABLE FEDERAL, STATE AND LOCAL REGULATIONS.

RECORD SIGNED COPY ON FILE AT PUBLIC WORKS APPROVED 08-21-03 DATE THE ARCHITECT/ENGINEER ASSUMES RESPONSIBILITY FOR THE APPROPRIATE USE OF THIS DETAIL.	CITY OF ROUND ROCK STORM SEWER LINE BEDDING DETAIL (NON-PAVED SURFACE)	DRAWING NO: D-02

M&S ENGINEERING
ELECTRICAL | CIVIL | STRUCTURAL | MEP
TXENG FIRM # F-1394 | TBPELS FIRM #10169800
WWW.MSENGR.COM | (830) 228-5446

STATE OF TEXAS
JENNIFER L. HENDERSON
116883
LICENSED
PROFESSIONAL ENGINEER
09/18/2020

LAVISH SALON AND BOUTIQUE
901 N. VISTA RIDGE BLVD.
CEDAR PARK, TEXAS

STORM DETAILS

JOB:8120ADAYA.005

DATE: 18/09/2020

DRAWN:	AR	PM:	JH
DESIGN:	AR	DM:	JH
PEER:	JS	OTHER:	

REVISIONS:

DELTA	DESCRIPTION	DATE

SHEET:

CITY PROJECT NUMBER: _____

Date: Sep 18, 2020, 9:24am User ID: areilly
File: T:\active projects\8120\03 geographic general civil\8120adaya.005 - lavish salon and boutique\dwg\Sheets\8120ADAYA.005-DETAILS.dwg

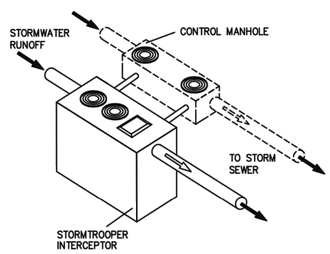

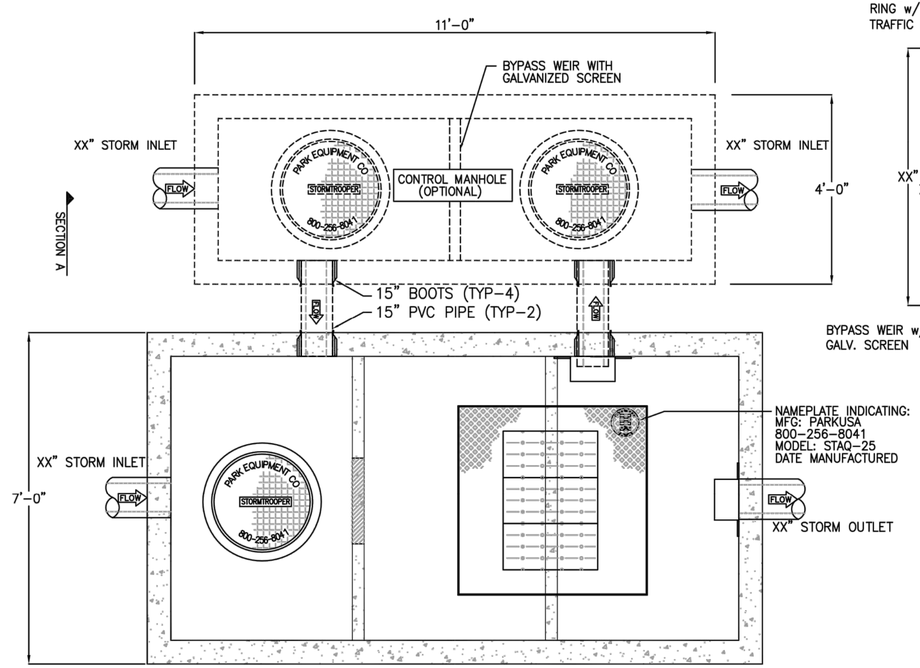

PLAN VIEW

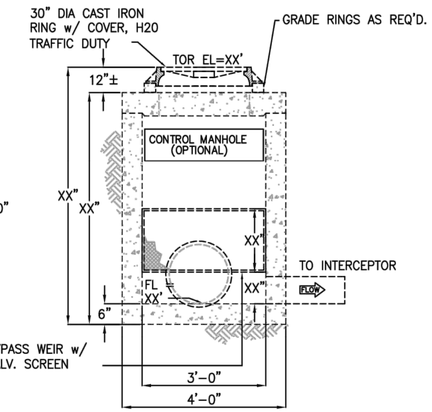

SECTION A

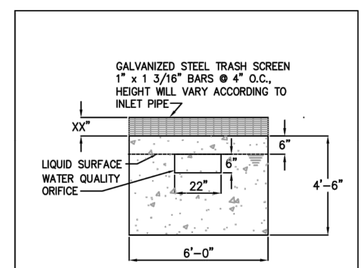

ORIFICE BAFFLE DETAIL

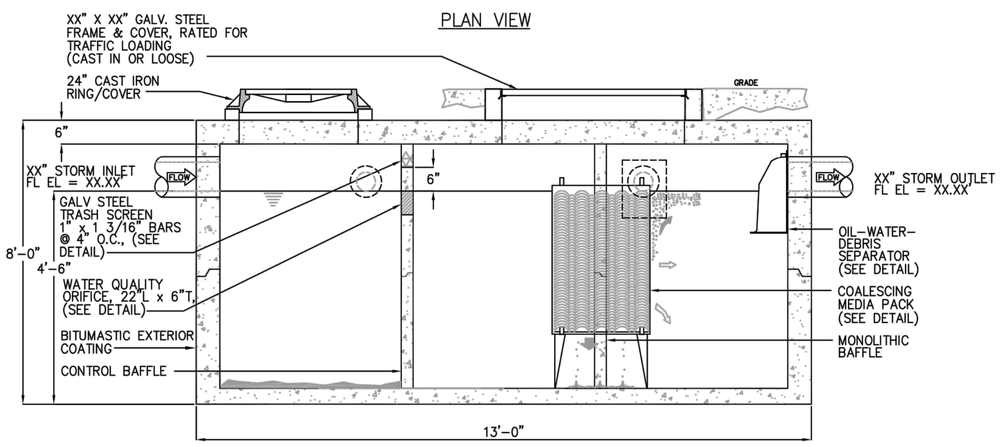

ELEVATION

ENGINEER PROVIDE ELEVATIONS PRIOR TO FABRICATION

MODEL NO.	FLOW RATE (gpm)	VAULT SURFACE AREA (sf)	NUMBER OF PLATE COLUMNS	NUMBER OF STACK FEET/ COLUMN	PROJECTED SURFACE AREA OF PLATES (Ft^2)	TOTAL SURFACE AREA OF SYSTEM (Ft^2)	MAXIMUM EFFECTIVE AREA FOR 80% REDUCTION
SWAQ-25	1440	72	3	2.5	297	369	0.50

Specifications

CONCRETE : Class 1 concrete with design strength of 4500 PSI at 28 days. Unit is of monolithic construction at floor and first stage of wall with sectional riser to required depth.

REINFORCEMENT: Grade 60 reinforced with steel rebar conforming to ASTM A615 on required centers or equal.

GRATING: All steel fabrication shall be in accordance to AWA D1.1. Steel shall be ASTM A36 carbon steel, and hot-dipped galvanized after fabrication in accordance to ASTM A123

ACCESS: Manhole frames, covers or grates are manufactured of grey cast iron conforming to ASTM A48 Class 30. Manhole shall have 30 inch inside diameter and be traffic duty.

HATCHWAYS: Galvanized steel skid-resistant double leaf H-20 rated.

Engineering Data

Interceptor is structurally and hydraulically engineered conforming to regulatory standards. Nominal capacity as indicated.

Field excavation and preparation shall be completed prior to delivery of interceptor. Use dimensional data as shown.

MEMBER:

General Information

The StormTrooper® AQ stormwater interceptor is designed to receive & treat stormwater runoff on a gravity-flow and once-through basis.

Guaranteed Performance
Pre-engineered coalescing media packs are utilized for enhanced separation which provide SUPERIOR performance compared to other separators which utilize baffles or diverters.

Applications
The Park StormTrooper Interceptor is designed for stormwater runoff from commercial & industrial applications where excessive pollutants may harm the environment or damage sewer systems.

By-Pass Design
A by-pass manhole diverts stormwater during heavy peak storm periods. This allows for optimal interceptor sizing.

Maintenance
The Park StormTrooper Interceptor requires minimal maintenance. Hydrocarbons and solids are removed from the stormwater via baffles and compartments.

These pollutants are removed from the separator when serviced by a licensed vacuum truck operator.

© Park 2012

PROJECT :
CUSTOMER :
ORDER # : PM:

www.park-usa.com
PARK USA Design for Water

Storm Trooper AQ
STORMWATER TREATMENT SYSTEMS PATENT NO. 7,470,369

STORMTROOPER AQ
STORMWATER QUALITY INTERCEPTOR

SCALE NONE	DWG. NO. SWAQ-25-BYPASS	REV. A
DATE 05/16/12		

M&S ENGINEERING
ELECTRICAL | CIVIL | STRUCTURAL | MEP
TXENG FIRM # F-1394 | TBPELS FIRM #10169800
WWW.MSENGR.COM | (830) 228-5446

STATE OF TEXAS
JENNIFER L. HENDERSON
116883
LICENSED
PROFESSIONAL ENGINEER
09/18/2020

LAVISH SALON AND BOUTIQUE
901 N. VISTA RIDGE BLVD.
CEDAR PARK, TEXAS

STORMTROOPER DETAIL

JOB:8120ADAYA.005
DATE: 18/09/2020

DRAWN: AR	PM: JH
DESIGN: AR	DM: JH
PEER: JS	OTHER:

REVISIONS:

DELTA	DESCRIPTION	DATE

SHEET:

30 OF 40

CITY PROJECT NUMBER: _____

Date: Sep 18, 2020, 9:24am User ID: emilly
File: T:\clients\projects\8120\01 geotechnical\general civil\8120adaya.005 - lavish salon and boutique\dwg\Sheets\8120ADAYA.005-DETAILS.dwg

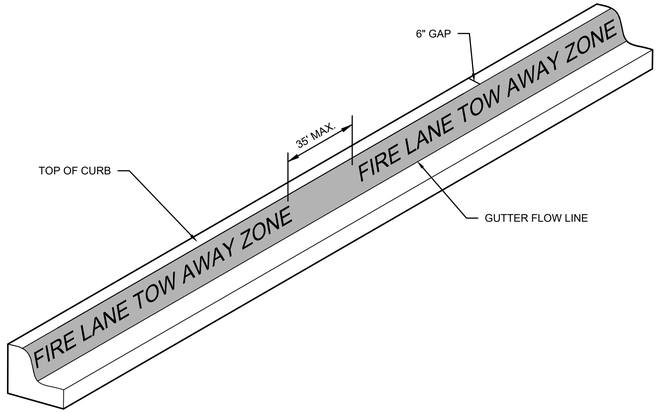

NOTES:
FIRE LANE STRIPING TO BE 6" WIDE RED PAINT WITH "FIRE LANE TOW AWAY ZONE" IN 4" TALL WHITE LETTERS. WORDING MAY NOT BE SPACED GREATER THAN 35' APART. STRIPING TO BE PAINTED ON THE FACE OF CURB WHEN PRESENT AND PAINTED FLAT ON THE PARKING SURFACE WHEN IT IS NOT.

01 FIRE LANE STRIPING
SCALE: N.T.S.

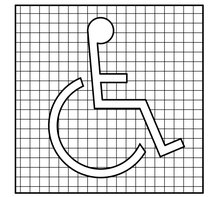

COLORS:
- LEGEND AND BORDER - GREEN
- WHITE SYMBOL ON BLUE BACKGROUND
- BACKGROUND - WHITE

02 HANDICAP SIGN
SCALE: N.T.S.

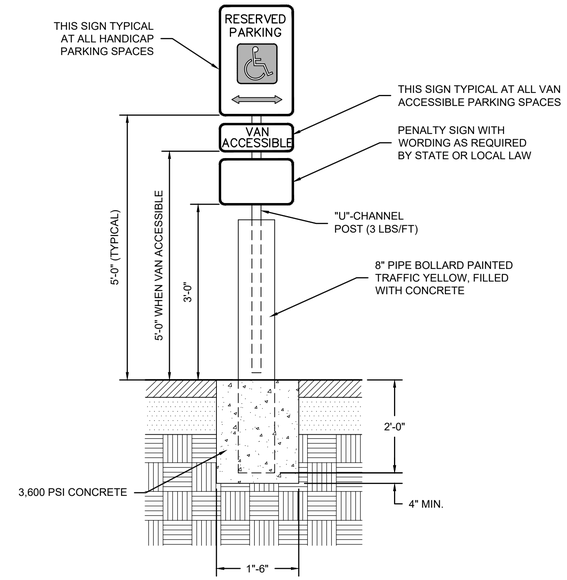

03 HANDICAP SIGN ASSEMBLY
SCALE: N.T.S.

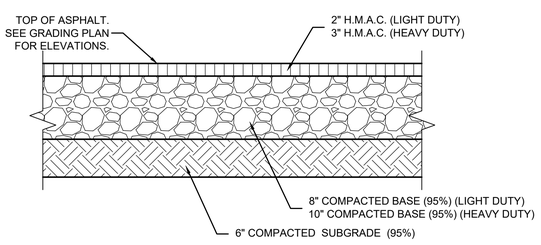

ASPHALT SECTION

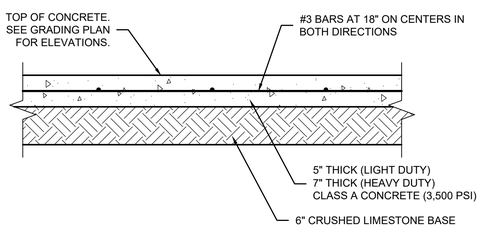

NOTES:
1. MAXIMUM CONTROL JOINT SPACING SHALL BE 12.5 FEET. IF SAWCUT, CONTROL JOINTS SHOULD BE CUT WITHIN 6-12 HOURS OF CONCRETE PLACEMENT.
2. MAXIMUM EXPANSION JOINT SPACING SHALL BE 90 FEET.
3. DOWELS AT EXPANSION JOINTS SHALL BE 3/4" BARS, 18" IN LENGTH, WITH ONE END TREATED TO SLIP, SPACED 12" ON CENTER AT EACH JOINT.

CONCRETE SECTION

04 PAVEMENT SECTIONS
SCALE: N.T.S.

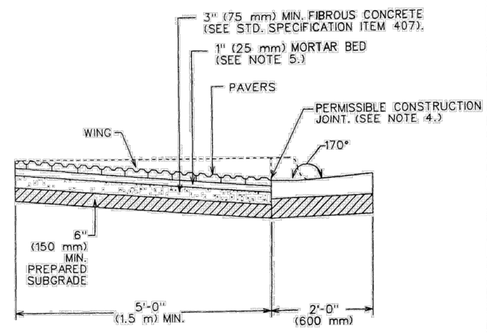

CROSS SECTION

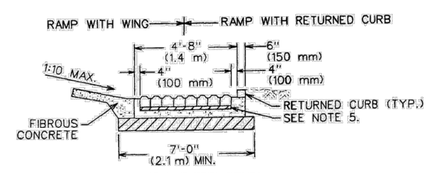

FRONT END VIEW

CITY OF AUSTIN DEPARTMENT OF PUBLIC WORKS	DETECTABLE WARNING-PAVER (PRIVATE PROPERTY)	
Bill Gardner 6/21/07 ADOPTED	THE ARCHITECT/ENGINEER ASSUMES RESPONSIBILITY FOR APPROPRIATE USE OF THIS STANDARD.	STANDARD NO. 432S-2B 1 OF 2

GENERAL NOTES:
1. THIS STANDARD IS APPLICABLE FOR RAMP CONSTRUCTION WITHIN PRIVATE PROPERTY ONLY.
2. PAVERS ARE REQUIRED FOR ALL CURB RAMP INSTALLATIONS.
3. PAVERS WILL HAVE DETECTABLE WARNING THAT CONSISTS OF RAISED TRUNCATED DOMES WITH A DIAMETER OF 0.9" (23 mm), A NOMINAL HEIGHT OF 0.2" (5 mm) AND A NOMINAL CENTER TO CENTER SPACING OF 2.35" (60 mm) AND SHALL CONSTRAST VISUALLY WITH ADJOINING SURFACES, EITHER LIGHT-ON-DARK OR DARK-ON-LIGHT (Re: ADAAG SECTION 4.29.2). MATERIAL USED TO PROVIDE CONTRAST SHALL BE AN INTEGRAL PART OF THE WALKING SURFACE. PAVER PATTERN SHALL BE BASKET WEAVE UNLESS DIRECTED OTHERWISE BY THE ENGINEER OR DESIGNATED REPRESENTATIVE.
4. TYPICAL SIDEWALK WIDTHS AND CURB RADII ARE SHOWN FOR ILLUSTRATION ONLY. REFER TO THE TRANSPORTATION CRITERIA MANUAL FOR SIDEWALK WIDTHS, CURB RADII AND CURB BASIS.
5. THE PERMISSIBLE CONSTRUCTION JOINT BETWEEN THE PAVERS AND THE ADJOINING SURFACE SHALL BE LIMITED TO 1/4" (6 mm) JOINT SIZE. GAPS LARGER THAN 1/4" (6 mm) MUST BE APPROVED BY THE ENGINEER OR DESIGNATED REPRESENTATIVE. ALL JOINTS BETWEEN BRICKS AND ADJOINING SURFACE SHALL BE MORTAR FILLED UNLESS DIRECTED OTHERWISE BY THE ENGINEER OR DESIGNATED REPRESENTATIVE.
6. MORTAR SHALL CONFORM TO STD. SPECIFICATION ITEM SECTION 403S.3.5, MORTAR AND GROUT. ALL OTHER CONCRETE SHALL CONFORM TO STD. SPECIFICATION ITEM 403S, CONCRETE FOR STRUCTURES, UNLESS OTHERWISE NOTED.
7. CURB RAMPS WITH RETURNED CURB MAY ONLY BE USED WHERE PEDESTRIANS WOULD NOT NORMALLY WALK DIAGONALLY ACROSS THE RAMP.

CITY OF AUSTIN DEPARTMENT OF PUBLIC WORKS	DETECTABLE WARNING-PAVER (PRIVATE PROPERTY)	
Bill Gardner 6/21/07 ADOPTED	THE ARCHITECT/ENGINEER ASSUMES RESPONSIBILITY FOR APPROPRIATE USE OF THIS STANDARD.	STANDARD NO. 432S-2B 2 OF 2

M&S ENGINEERING
ELECTRICAL | CIVIL | STRUCTURAL | MEP
TXENG FIRM # F-1394 | TBPELS FIRM #10169800
WWW.MSENGR.COM | (830) 228-5446

STATE OF TEXAS
JENNIFER L. HENDERSON
116883
LICENSED
PROFESSIONAL ENGINEER
09/18/2020

LAVISH SALON AND BOUTIQUE
901 N. VISTA RIDGE BLVD.
CEDAR PARK, TEXAS

PAVING DETAILS

JOB:8120ADAYA.005
DATE: 18/09/2020

DRAWN:	AR	PM:	JH
DESIGN:	AR	DM:	JH
PEER:	JS	OTHER:	

REVISIONS:

DELTA	DESCRIPTION	DATE

SHEET:
31 OF 40

CITY PROJECT NUMBER: _____

Date: Sep 18, 2020, 9:24am User ID: anelly
File: T:\active projects\2020\20 georgetown general civil\8120adaya.005 - lavish salon and boutique\dwg\Sheets\8120ADAYA.005-DETAILS.dwg

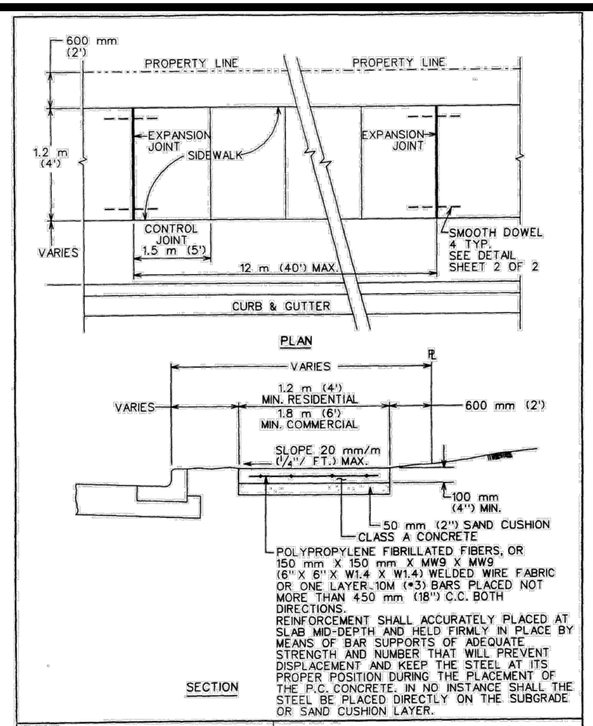

CITY OF AUSTIN DEPARTMENT OF PUBLIC WORKS	SIDEWALK	
Bill Gardner 3/26/08 ADOPTED	THE ARCHITECT/ENGINEER ASSUMES RESPONSIBILITY FOR APPROPRIATE USE OF THIS STANDARD.	STANDARD NO. 432S-1 1 OF 3

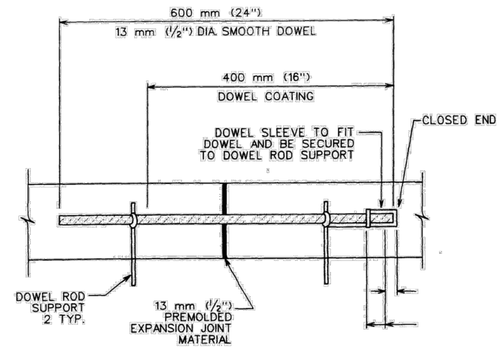

CITY OF AUSTIN DEPARTMENT OF PUBLIC WORKS	SIDEWALK	
Bill Gardner 3/26/08 ADOPTED	THE ARCHITECT/ENGINEER ASSUMES RESPONSIBILITY FOR APPROPRIATE USE OF THIS STANDARD.	STANDARD NO. 432S-1 2 OF 3

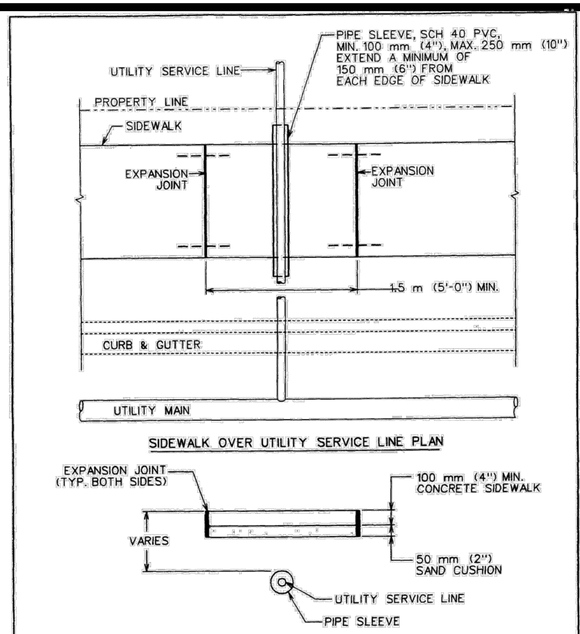

NOTES:
1. THIS STANDARD APPLIES TO THE INSTALLATION OF NEW UTILITIES OR UTILITIES BEING REPLACED BY A NEW LINE.
2. NO JOINTS IN UTILITY SERVICE PIPE TO BE LOCATED INSIDE PVC PIPE SLEEVE.

CITY OF AUSTIN DEPARTMENT OF PUBLIC WORKS	SIDEWALK	
Bill Gardner 3/26/08 ADOPTED	THE ARCHITECT/ENGINEER ASSUMES RESPONSIBILITY FOR APPROPRIATE USE OF THIS STANDARD.	STANDARD NO. 432S-1 3 OF 3

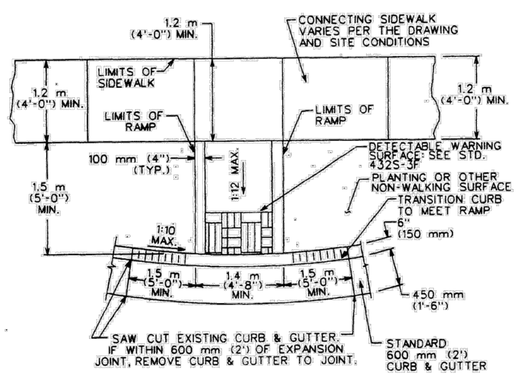

CITY OF AUSTIN DEPARTMENT OF PUBLIC WORKS	TYPE 1B SIDEWALK CURB RAMP	
Bill Gardner 9/14/05 ADOPTED	THE ARCHITECT/ENGINEER ASSUMES RESPONSIBILITY FOR APPROPRIATE USE OF THIS STANDARD.	STANDARD NO. 432S-5B

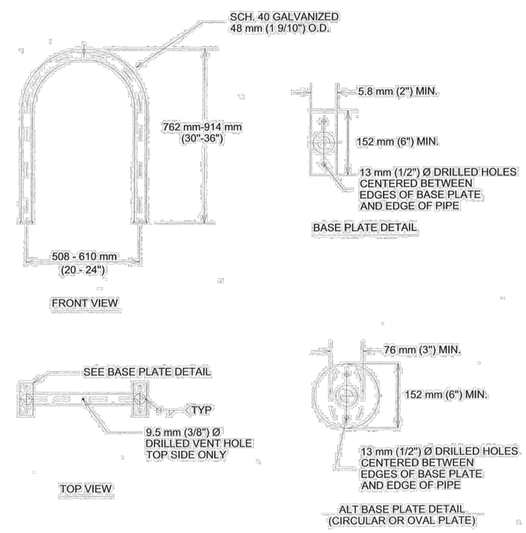

GENERAL NOTES:
1. RACK INSTALLATION METHOD SHALL COMPLY WITH CITY STANDARD DETAIL 710S-3, 710S-4, OR 710S-5.
2. RACK PLACEMENT SHALL COMPLY WITH APPLICABLE CITY STANDARD DETAILS 710S-6A, 710S-6B, OR 710S-6C AND CITY OF AUSTIN CODE SECTION 25-6-477 OR ITS SUCCESSOR.
3. BASE PLATES TO BE 6.35 mm (1/4") PLATES, ASTM A-36 1010-1018 LOW CARBON PRIME STEEL

CITY OF AUSTIN DEPARTMENT OF PUBLIC WORKS	CLASS III STYLE BICYCLE PARKING	
9/26/12 ADOPTED	THE ARCHITECT/ENGINEER ASSUMES RESPONSIBILITY FOR APPROPRIATE USE OF THIS STANDARD.	STANDARD NO. 710S-1 1 OF 1

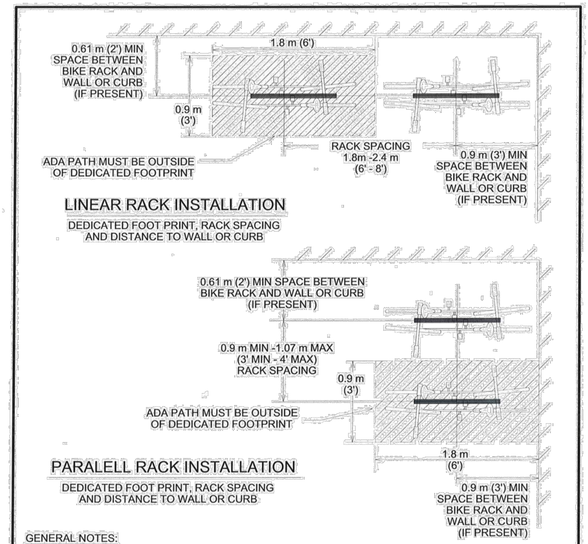

GENERAL NOTES:
1. RACK MUST COMPLY WITH CITY STANDARD DETAIL 710S-1 OR 710S-2.
2. RACK INSTALLATION MUST COMPLY WITH CITY STANDARD DETAIL 710S-3, 710S-4, OR 710S-5.
3. BIKE RACKS MUST BE PLACED IN COMPLIANCE WITH CITY OF AUSTIN CODE SECTION 25-6-477 OR ITS SUCCESSOR.
4. BIKE RACKS MUST BE LOCATED WITHIN 7.32m (24') OF EITHER THE MAIN BUILDING ENTRY OR THE ENTRY TO THE PRIMARY LOCAL USE.
5. BIKE RACKS MUST BE PLACED PERPENDICULAR TO THE CURB WITH THE CENTERLINE OF THE RACK IN LINE WITH ANY ADJACENT TREES OR LIGHT POLES.
6. THE MINIMUM CLEARANCE BETWEEN BICYCLE RACK AND ANY PUBLIC OR PRIVATE UTILITY APPURTENANCE MUST BE 0.9m (3').
7. BIKE RACKS MAY NOT BE MOUNTED ON TOP OF VAULTS OR STORM DRAIN INLETS.

CITY OF AUSTIN DEPARTMENT OF PUBLIC WORKS	FURNISHING LOCATION IN 12' WIDE OR LESS SIDEWALKS - BICYCLE RACK SITTING	
9/26/12 ADOPTED	THE ARCHITECT/ENGINEER ASSUMES RESPONSIBILITY FOR APPROPRIATE USE OF THIS STANDARD.	STANDARD NO. 710S-6C 1 OF 1

M&S ENGINEERING
ELECTRICAL | CIVIL | STRUCTURAL | MEP
TXENG FIRM # F-1394 | TBPELS FIRM #10169800
WWW.MSENGR.COM | (830) 228-5446

STATE OF TEXAS
JENNIFER L. HENDERSON
116883
LICENSED
PROFESSIONAL ENGINEER
09/18/2020

LAVISH SALON AND BOUTIQUE
901 N. VISTA RIDGE BLVD.
CEDAR PARK, TEXAS

PAVING DETAILS

JOB:8120ADAYA.005			
DATE: 18/09/2020			
DRAWN:	AR	PM:	JH
DESIGN:	AR	DM:	JH
PEER:	JS	OTHER:	

REVISIONS:

DELTA	DESCRIPTION	DATE

SHEET:

32 OF 40

CITY PROJECT NUMBER: _____

Date: Sep 18, 2020, 9:25am User ID: smilly
File: T:\acad\projects\2020\09 gardgreen\general civil\8120adaya.005 - lavish salon and boutique\dwg\Sheets\8120ADAYA.005-DETAILS.dwg

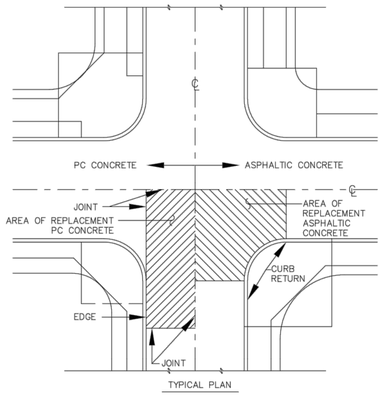

TRENCH REPAIRS WITHIN PORTLAND CEMENT CONCRETE PAVEMENTS NOTE:

1. IF ANY PART OF THE TRENCH REPAIR FALLS WITHIN AN INTERSECTION, THEN THE ENTIRE CONCRETE SLAB FROM JOINT TO JOINT AND JOINT TO EDGE SHALL BE REPLACED, UNLESS OTHERWISE DIRECTED IN WRITING BY THE DIRECTOR.

TRENCH REPAIRS WITHIN ASPHALTIC CONCRETE PAVEMENTS NOTES:

1. IF ANY PART OF THE TRENCH REPAIR FALLS WITHIN AN INTERSECTION, DEFINED FROM CURB RETURN TO CURB RETURN, THE ENTIRE QUADRANT OF THE EXISTING SURFACE SHALL BE REPLACED, UNLESS OTHERWISE DIRECTED IN WRITING BY THE ENGINEER OR DESIGNATED REPRESENTATIVE.
2. A QUADRANT IS DEFINED AS THE CROSS-HATCHED AREA IN THE ABOVE DETAIL.

1 TYPICAL RESTORATION FOR EXCAVATION IN INTERSECTIONS

SCALE: NOT TO SCALE

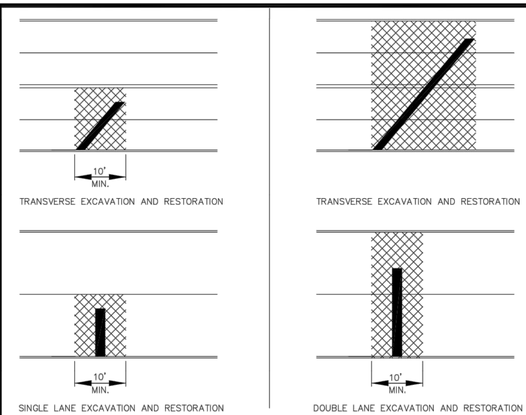

NOTES:

1. PROJECTS THAT DO NOT HAVE AN ACCEPTABLE STREET REPAIR, APPROVED BY PUBLIC WORKS, WILL NOT RECEIVE A WATER METER UNTIL CORRECTED. CONTACT CONSTRUCTION INSPECTOR / ENGINEERING CONTACT FOR DETAILS.
2. IN ASPHALT, RESTORATION MUST BE A MINIMUM OF 10' CURB LENGTH BY THE WIDTH OF EACH LANE EXCAVATED.

AREA OF EXCAVATION
LIMITS OF RESTORATION

2 TYPICAL RESTORATION FOR EXCAVATION IN STREETS

SCALE: NOT TO SCALE

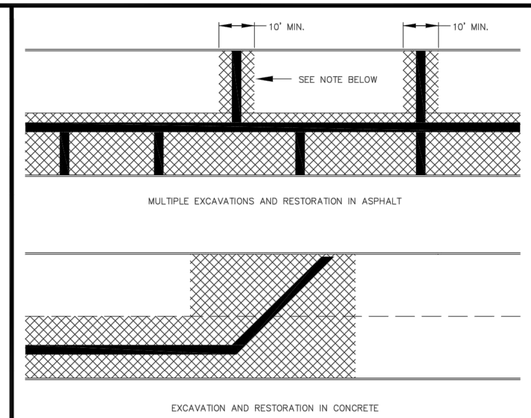

NOTES:

1. ACTUAL RESTORATION LIMITS ARE DETERMINED BY JOINT LOCATIONS. IN ASPHALT, RESTORATION MUST BE A MINIMUM OF 10' CURB LENGTH BY THE WIDTH OF EACH LANE EXCAVATED.
2. IN ASPHALT, RESTORATION MUST BE A MINIMUM OF 10' CURB LENGTH BY THE WIDTH OF EACH LANE EXCAVATED.

AREA OF EXCAVATION
LIMITS OF RESTORATION

3 TYPICAL RESTORATION FOR EXCAVATION IN STREETS

SCALE: NOT TO SCALE

FOR PARKING LOTS AND PRIVATE PROPERTY ONLY

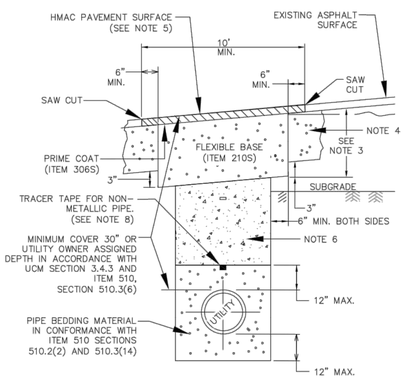

NOTES:

1. THE EXISTING PAVING SURFACE SHALL BE SAW CUT IN A STRAIGHT LINE, A MINIMUM OF 12" WIDER THAN UNDISTURBED SIDES OF THE TRENCH AND SYMMETRICAL ABOUT THE CENTER LINE OF THE EXCAVATION.
2. IF EXCAVATION AREA IS OPEN FOR TEMPORARY PUBLIC USE, THE SURFACE SHALL BE MAINTAINED LEVEL WITH ADJACENT RIDING SURFACE WITH COLD MIX AC OR TEMPORARY HMAC. TEMPORARY MIX SHALL BE PLACED OVER FLEXIBLE BASE.
3. ROAD BASE SHALL BE REPLACED IN KIND WITH BASE THICKNESS EQUAL TO EXISTING BASE THICKNESS PLUS 3", BUT IN NO CASE LESS THAN 12".
4. DAMAGED PAVEMENT OUTSIDE THE TRENCH CUT SHALL BE REMOVED AND REPLACED WITH A BASE THICKNESS OF 10" OR A THICKNESS MATCHING EXISTING, WHICHEVER IS GREATER.
5. REPLACEMENT AC SURFACE LAYER SHALL MATCH EXISTING BUT NOT LESS THAN 2"
6. CLASS "J" PC CONCRETE (ITEM 403S) OR CONTROLLED LOW STRENGTH MATERIAL (CLSM) PC CONCRETE GREATER THAN A 2 SACK MIX WILL NOT BE ALLOWED.
7. TACK COAT ALL EXPOSED EDGES AND SURFACES (SPEC ITEM 307S). CRACK SEAL SAW-CUT LINES
8. AS PER CITY OF AUSTIN STANDARD SPECIFICATION 510, SECTION 510.2(8)(K)5, FOR ALL NON-METALLIC PIPE, DIRECTLY ABOVE THE CENTERLINE OF THE PIPE AND A MINIMUM OF 12" BELOW THE SUBGRADE, OR A MINIMUM OF 18" BELOW FINISHED GRADE ON AREAS OUTSIDE THE LIMITS OF PAVEMENT, SHALL BE PLACED INDUCTIVE TRACER TAPE IN ACCORDANCE WITH THE MANUFACTURER'S REQUIREMENTS. THE TAPE SHALL BE ENCASED IN A PROTECTIVE, INERT, PLASTIC JACKET AND COLOR CODED IN ACCORDANCE WITH APWA UNIFORM COLOR CODE.

FOR PARKING LOTS AND PRIVATE PROPERTY ONLY

4 TRENCH REPAIR IN ASPHALTIC SURFACE OVER FLEXIBLE BASE (UCM SECTION 5.8.0)

SCALE: NOT TO SCALE

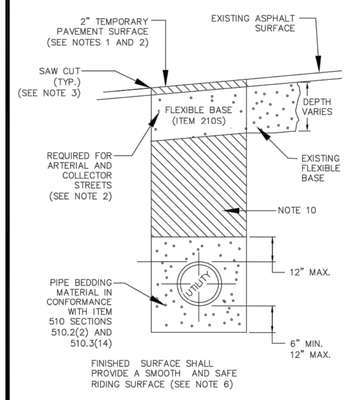

NOTES:

1. TEMPORARY PAVEMENT REPAIRS SHALL BE ALLOWED NO LONGER THAN 90 DAYS AFTER PASSING THE WATER PRESSURE AND/OR WASTEWATER MANDREL TESTS. IF TEMPORARY PAVEMENT REPAIRS ARE TO REMAIN IN PLACE FOR A PERIOD EXCEEDING 90 DAYS, ON ANY SINGLE TRENCH LINE OR INDIVIDUAL STREET, SUCH TEMPORARY PAVEMENT SHALL BE HMAC, PLACED AND COMPACTED SUFFICIENTLY TO WITHSTAND THE ANTICIPATED TRAFFIC LOADS OVER THE DURATION OF THE TEMPORARY REPAIR.
2. IF EXCAVATION AREA IS OPEN FOR TEMPORARY PUBLIC USE, THE SURFACE SHALL BE MAINTAINED LEVEL WITH ADJACENT RIDING SURFACE USING COLD MIX AC IN ACCORDANCE WITH TXDOT "DMS-9203, RAPID CURING ASPHALT CONCRETE PATCHING MATERIAL" OR TEMPORARY HMAC PER COA ITEM "340S HOT MIX ASPHALTIC CONCRETE PAVEMENT". A MINIMUM OF TWO INCHES (2") OF TEMPORARY COLD MIX OR HMAC SHALL BE PLACED OVER COMPACTED BACKFILL. FLEXIBLE BASE SHALL ALSO BE REQUIRED, FOR ALL COLLECTOR OR ARTERIAL STREETS.
3. THE EXISTING CONCRETE OR ASPHALT PAVING SURFACE SHALL BE SAW CUT. SAW CUTS SHALL BE IN A STRAIGHT LINE, ALONG THE SIDES OF THE TRENCH (OR MANHOLE EXCAVATION) AND SYMMETRICAL ABOUT THE CENTER LINE OF THE EXCAVATION. ANY DAMAGED EDGES SHALL BE RE-SAW CUT IF REQUIRED BY THE OWNER.
4. HMAC OR COLD MIX SHALL BE FREE OF CONTAMINATION, AS DETERMINED BY A VISUAL INSPECTION BY THE OWNER'S REPRESENTATIVE, REFERENCE ITEM 340S SECTION 340S.10 A.
5. TEMPORARY PAVING MATERIAL MUST BE COMPACTED WITH A SMOOTH DRUM VIBRATORY ROLLER.
6. THE FINISHED SURFACE SHALL BE MAINTAINED DUST FREE AND PROVIDE A SMOOTH AND SAFE RIDING SURFACE FOR ALL VEHICLES ALONG THE ROUTE, INCLUDING, BUT NOT LIMITED TO SMALL CARS, MOTORCYCLES, MOPEDS AND BICYCLES. THE TEMPORARY SURFACE SHALL BE MAINTAINED BY THE CONTRACTOR THE ENTIRE TIME THE TEMPORARY SURFACE IS IN PLACE. DAILY MAINTENANCE SHALL BE PERFORMED BASED ON FIELD CONDITIONS AND AT THE DIRECTION OF THE OWNER'S REPRESENTATIVE, UNTIL THE FINAL PAVEMENT SURFACE IS PLACED.
7. THE TEMPORARY PAVEMENT SURFACE SHALL HAVE A MAXIMUM ALLOWABLE DEVIATION OF ¼" ABOVE OR BELOW THE EXISTING PAVEMENT SURFACE DIRECTLY ADJACENT TO THE PATCH.
8. ANY PORTIONS OF THE TEMPORARY PAVEMENT SURFACE THAT HAVE SETTLED, BECOME DAMAGED, OR DETERIORATED MUST BE REPAIRED BY REMOVING THE EXISTING TEMPORARY SURFACE MATERIAL TO A MINIMUM DEPTH OF 2" BELOW THE SURFACE ELEVATION PRIOR TO REPLACING AND RECOMPACTING NEW COLD MIX/HOT MIX IN THE EXCAVATION AREA.
9. IF IT IS DETERMINED DURING CORRECTIVE ACTION THAT SOFT, SATURATED AND/OR UNSTABLE SUBSURFACE SOILS ARE CONTRIBUTING TO THE FAILURE OF THE TEMPORARY PAVEMENT SECTION, THE UNSUITABLE MATERIALS MUST BE REMOVED AND REPLACED WITH BACKFILL SOILS FREE OF ORGANICS, STONES OR ROCKS OVER 8 INCHES, AND HAVING A PLASTICITY INDEX OF 20 OR LESS, AND SHALL HAVE A MC WITHIN 2% OF OPTIMUM, PRIOR TO REPLACING THE TEMPORARY PAVEMENT SURFACE.
10. CLASS "J" PC CONCRETE (ITEM 403S) OR CONTROLLED LOW STRENGTH MATERIAL (CLSM) PC CONCRETE GREATER THAN A 2 SACK MIX WILL NOT BE ALLOWED.
11. ALL EXISTING ROADWAY STRIPING AND PAVEMENT MARKINGS REMOVED OR DAMAGED BY THE CONTRACTOR'S WORK SHALL BE RESTORED PRIOR TO OPENING THE STREET TO TRAFFIC.
12. TEMPORARY TRENCH REPAIR OPEN TO THE PUBLIC IS LIMITED TO 14 DAYS.

5 TEMPORARY TRENCH REPAIR IN ASPHALTIC SURFACE ITEM 510 SECTION 510.3 (25)(h)

SCALE: NOT TO SCALE

FOR PUBLIC ROADS

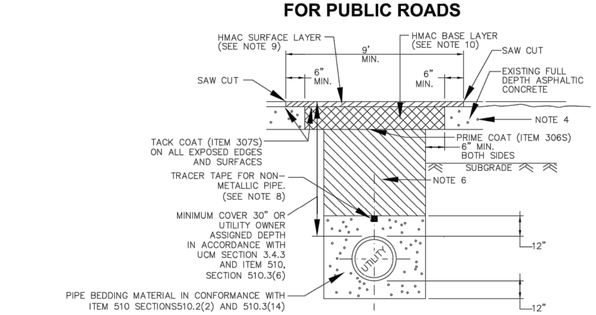

NOTES:

1. THE EXISTING PAVING SURFACE SHALL BE SAW CUT IN A STRAIGHT LINE, A MINIMUM OF 12" WIDER THAN UNDISTURBED SIDES OF THE TRENCH AND SYMMETRICAL ABOUT THE CENTER LINE OF THE EXCAVATION.
2. IF EXCAVATION AREA IS OPEN FOR TEMPORARY PUBLIC USE, THE SURFACE SHALL BE MAINTAINED LEVEL WITH ADJACENT RIDING SURFACE WITH COLD MIX AC OR TEMPORARY HMAC. TEMPORARY MIX SHALL BE PLACED OVER FLEXIBLE BASE.
3. ROAD BASE SHALL BE REPLACED IN KIND WITH BASE THICKNESS EQUAL TO EXISTING BASE THICKNESS PLUS 3", BUT IN NO CASE LESS THAN 12".
4. DAMAGED PAVEMENT OUTSIDE THE TRENCH CUT SHALL BE REMOVED AND REPLACED WITH A BASE THICKNESS OF 10" OR A THICKNESS MATCHING EXISTING, WHICHEVER IS GREATER.
5. REPLACEMENT AC SURFACE LAYER SHALL MATCH EXISTING BUT NOT LESS THAN 2"
6. CLASS "J" PC CONCRETE (ITEM 403S) OR CONTROLLED LOW STRENGTH MATERIAL (CLSM) PC CONCRETE GREATER THAN A 2 SACK MIX WILL NOT BE ALLOWED.
7. TACK COAT ALL EXPOSED EDGES AND SURFACES (SPEC ITEM 307S).
8. AS PER CITY OF AUSTIN STANDARD SPECIFICATION 510, SECTION 510.2(8)(K)5, FOR ALL NON-METALLIC PIPE, DIRECTLY ABOVE THE CENTERLINE OF THE PIPE AND A MINIMUM OF 12" BELOW THE SUBGRADE, OR A MINIMUM OF 18" BELOW FINISHED GRADE ON AREAS OUTSIDE THE LIMITS OF PAVEMENT, SHALL BE PLACED INDUCTIVE TRACER TAPE IN ACCORDANCE WITH THE MANUFACTURER'S REQUIREMENTS. THE TAPE SHALL BE ENCASED IN A PROTECTIVE, INERT, PLASTIC JACKET AND COLOR CODED IN ACCORDANCE WITH APWA UNIFORM COLOR CODE.
9. REPLACEMENT AC SURFACE LAYER SHALL BE OF THE TYPE AND THICKNESS BASED ON FUNCTIONAL CLASSIFICATION.
   a) MIN. 2" HMAC TYPE "D" FOR TRENCH REPAIR IN LOCAL/RESIDENTIAL STREETS.
   b) MIN. 3" HMAC TYPE "C" FOR TRENCH REPAIR IN COLLECTOR/ARTERIAL STREETS.
   SEE ITEM 340S, SECTION 340S.4.
10. THE COMBINED THICKNESS OF THE REPLACEMENT AC SURFACE AND BASE LAYERS SHALL MATCH THE THICKNESS OF EXISTING FULL DEPTH AC LAYER. HOWEVER, THE REPLACEMENT AC BASE LAYER SHALL BE A MINIMUM THICKNESS OF 6" OF TYPE A OR B HMA. A BASE LAYER TYPE THAT MATCHES THE NEW HMA SURFACE LAYER (SEE NOTE 1) MAY BE USED, IF THE TOTAL REPAIR AREA IS LESS THAN 300 SQUARE YARDS.
11. SEE PAVEMENT RESTORATION DETAIL 2 FOR LIMITS OF RESTORATION. SEE DETAIL 1 IF IN INTERSECTION. CRACK SEAL SAW-CUT LINES.

6 REPAIR OF FULL DEPTH ASPHALTIC CONCRETE (UCM SECTION 5.5.13) FOR PUBLIC ROADS

SCALE: NOT TO SCALE

CITY OF CEDAR PARK

DEPARTMENT OF PUBLIC WORKS

TEMPORARY AND FINAL REPAIR OF STREETS AND PUBLIC TRAFFIC AREAS

SHEET 1 OF 1

M&S ENGINEERING
ELECTRICAL | CIVIL | STRUCTURAL | MEP
TXENG FIRM # F-13394 | TBPELS FIRM #10169800
WWW.MSENGR.COM | (830) 228-5446

STATE OF TEXAS
JENNIFER L. HENDERSON
116883
LICENSED
PROFESSIONAL ENGINEER
09/18/2020

LAVISH SALON AND BOUTIQUE
901 N. VISTA RIDGE BLVD.
CEDAR PARK, TEXAS

PAVING DETAILS

JOB:8120ADAYA.005			
DATE: 18/09/2020			
DRAWN:	AR	PM:	JH
DESIGN:	AR	DM:	JH
PEER:	JS	OTHER:	

REVISIONS:

DELTA	DESCRIPTION	DATE

SHEET:

33 OF 40

CITY PROJECT NUMBER: _____

Date: Sep 18, 2020, 9:25am User ID: arelly
File: T:\active projects\2020\03 georgetown general civil\8120adaya.005 - lavish salon and boutique\dwg\Sheets\8120ADAYA.005-DETAILS.dwg

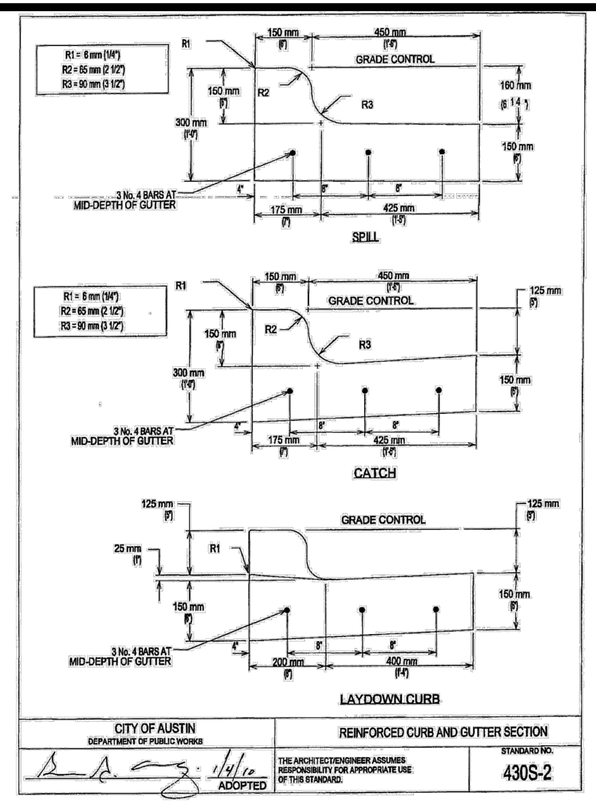

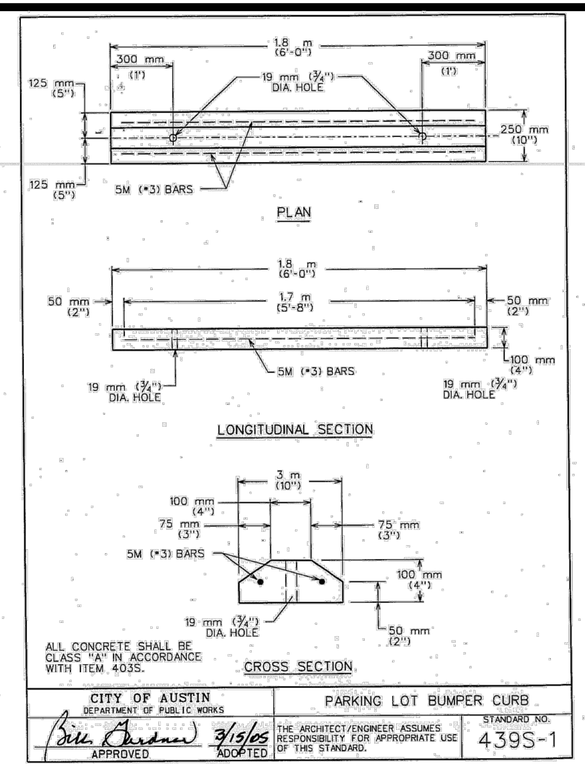

M&S ENGINEERING
ELECTRICAL | CIVIL | STRUCTURAL | MEP
TXENG FIRM # F-1394 | TBPELS FIRM #10169800
WWW.MSENGR.COM | (830) 228-5446

STATE OF TEXAS
JENNIFER L. HENDERSON
116883
LICENSED
PROFESSIONAL ENGINEER
09/18/2020

LAVISH SALON AND BOUTIQUE
901 N. VISTA RIDGE BLVD.
CEDAR PARK, TEXAS

PAVING DETAILS

JOB:8120ADAYA.005
DATE: 18/09/2020

DRAWN:	AR	PM:	JH
DESIGN:	AR	DM:	JH
PEER:	JS	OTHER:	

REVISIONS:

DELTA	DESCRIPTION	DATE

SHEET:

CITY PROJECT NUMBER: _____

Date: Sep 18, 2020, 9:25am User ID: areilly
File: T:\active projects\8120\83 georgetown general civil\8120adaya.005 - lavish salon and boutique\dwg\Sheets\8120ADAYA.005-DETAILS.dwg

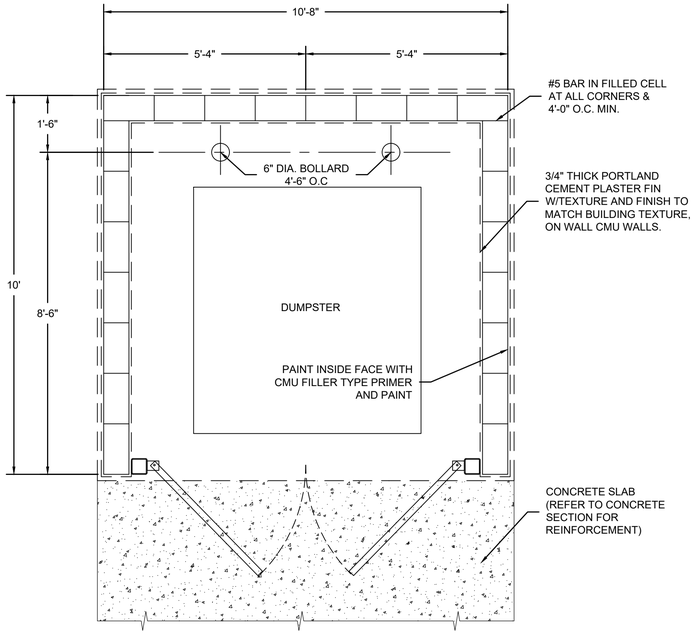

01 DUMPSTER ENCLOSURE PLAN
SCALE: 1/2" = 1'-0"

NOTE:
THIS STRUCTURE IS DESIGNED TO WITHSTAND 130 MPH WITH 3 SEC GUST.

DESIGN WIND:
Vult=130 (3 SEC. GUST)

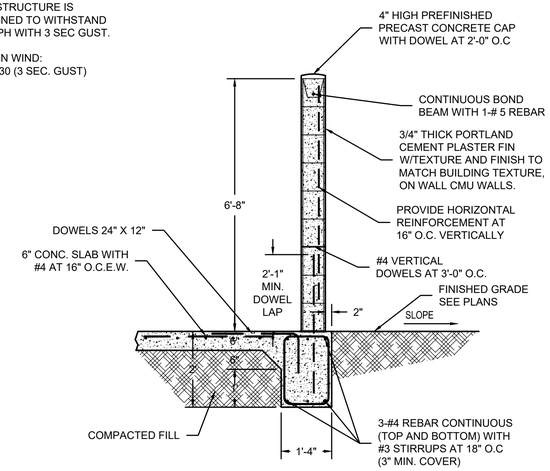

02 DUMPSTER ENCLOSURE WALL SECTION
SCALE: 1/2" = 1'-0"

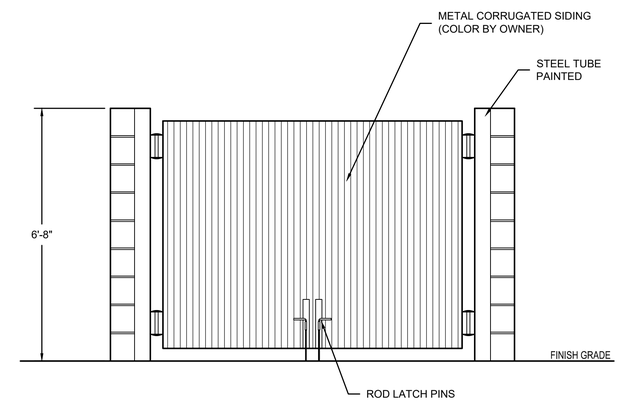

03 DUMPSTER ENCLOSURE-FRONT ELEVATION
SCALE: 1/2" = 1'-0"

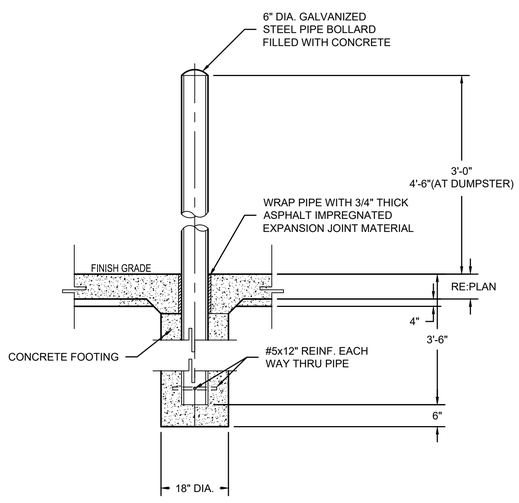

04 PIPE BOLLARD
SCALE: 1/2" = 1'-0"

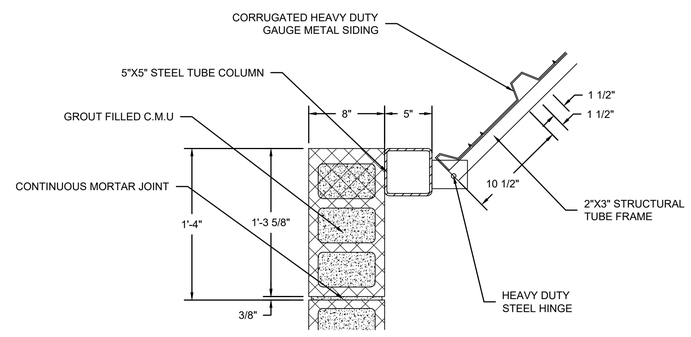

05 HINGE DETAIL
SCALE: 1 1/2" = 1'-0"

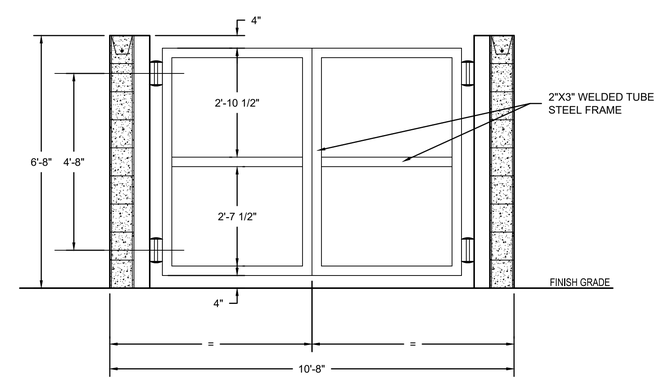

06 DUMPSTER ENCLOSURE SECTION
SCALE: 1/2" = 1'-0"

M&S ENGINEERING
ELECTRICAL | CIVIL | STRUCTURAL | MEP
TXENG FIRM # F-1394 | TBPELS FIRM #10169800
WWW.MSENGR.COM | (830) 228-5446

STATE OF TEXAS
JENNIFER L. HENDERSON
116883
LICENSED
PROFESSIONAL ENGINEER
09/18/2020

LAVISH SALON AND BOUTIQUE
901 N. VISTA RIDGE BLVD.
CEDAR PARK, TEXAS

DUMPSTER DETAILS

JOB:8120ADAYA.005			
DATE: 18/09/2020			
DRAWN:	AR	PM:	JH
DESIGN:	AR	DM:	JH
PEER:	JS	OTHER:	

REVISIONS:

DELTA	DESCRIPTION	DATE

SHEET:

CITY PROJECT NUMBER: _____

Date: Sep 18, 2020, 9:25am User ID: anelly
File: T:\active projects\2020\20 georgetown general civil\8120adaya.005 - lavish salon and boutique\dwg\Sheets\8120ADAYA.005-DETAILS.dwg

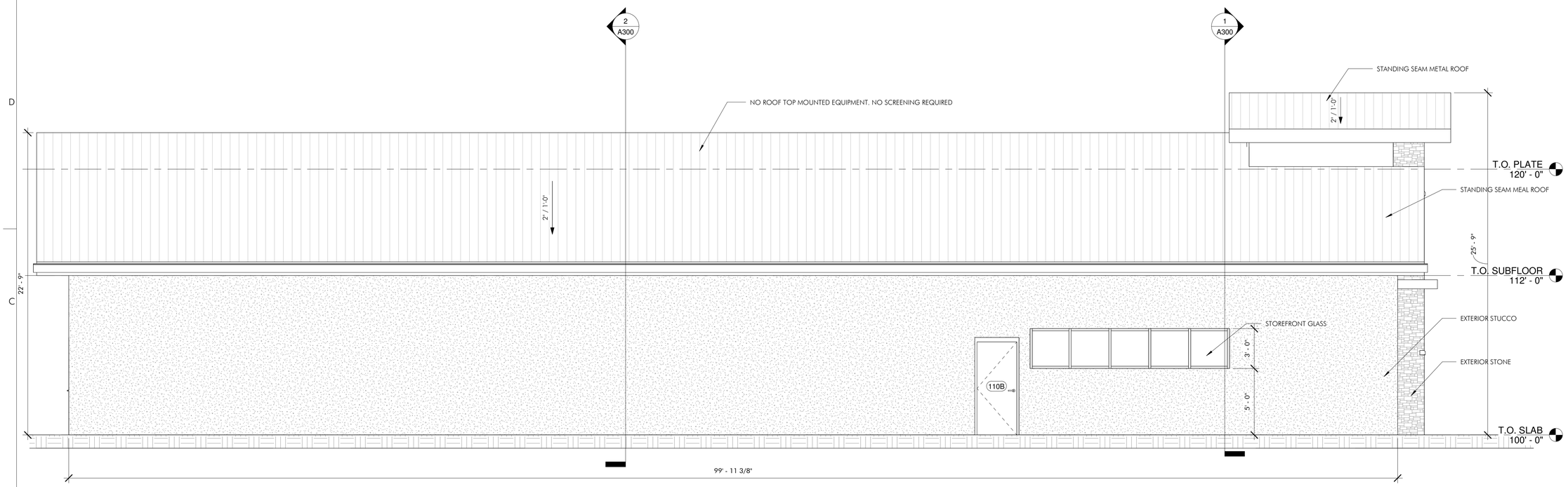

2 REAR ELEVATION
1/4" = 1'-0"

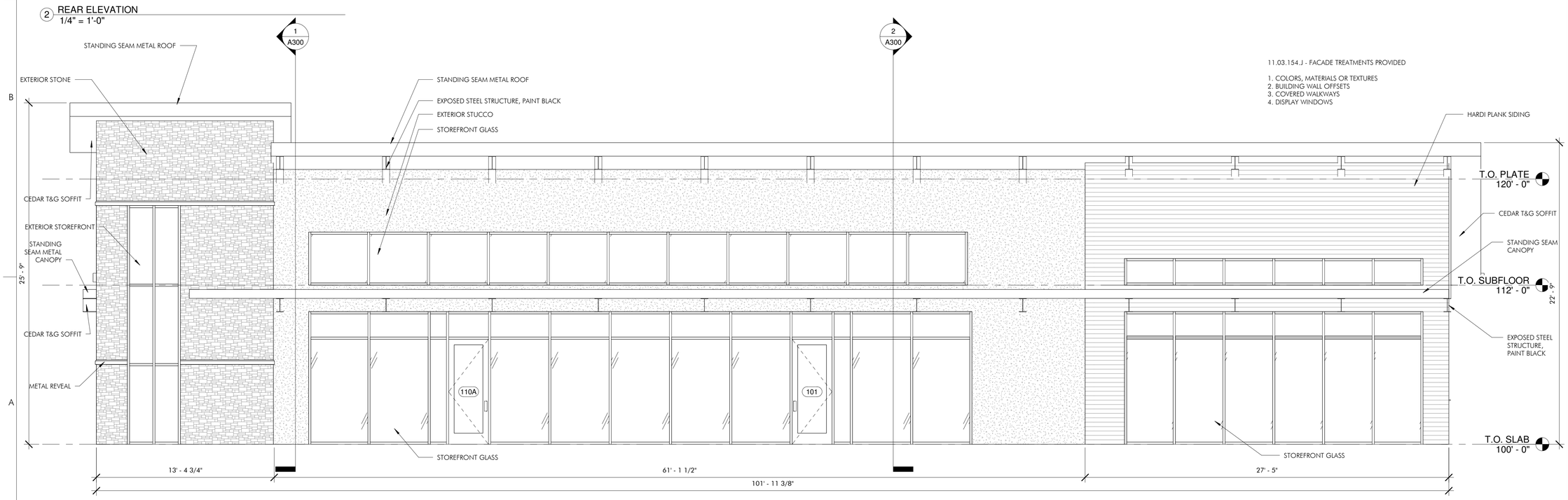

1 FRONT ELEVATION
1/4" = 1'-0"

MODE design company
103 woods lane
cedar park, tx 78613
ryan@modedc.us | www.modedc.us
+ 1 512 733 1150

NOT FOR REGULATORY APPROVAL, PERMITTING OR CONSTRUCTION

LAVISH SALON
WENDY SCHNEIDER
901 N. VISTA RIDGE BLVD., CEDAR PARK, TX 78613

PROJECT PHASE
SITE PLAN SUBMITTAL
REVISIONS

PROJECT NUMBER
20119-00
DATE ISSUED
9/18/2020
SHEET TITLE
EXTERIOR ELEVATIONS

SHEET NUMBER
36 OF 40

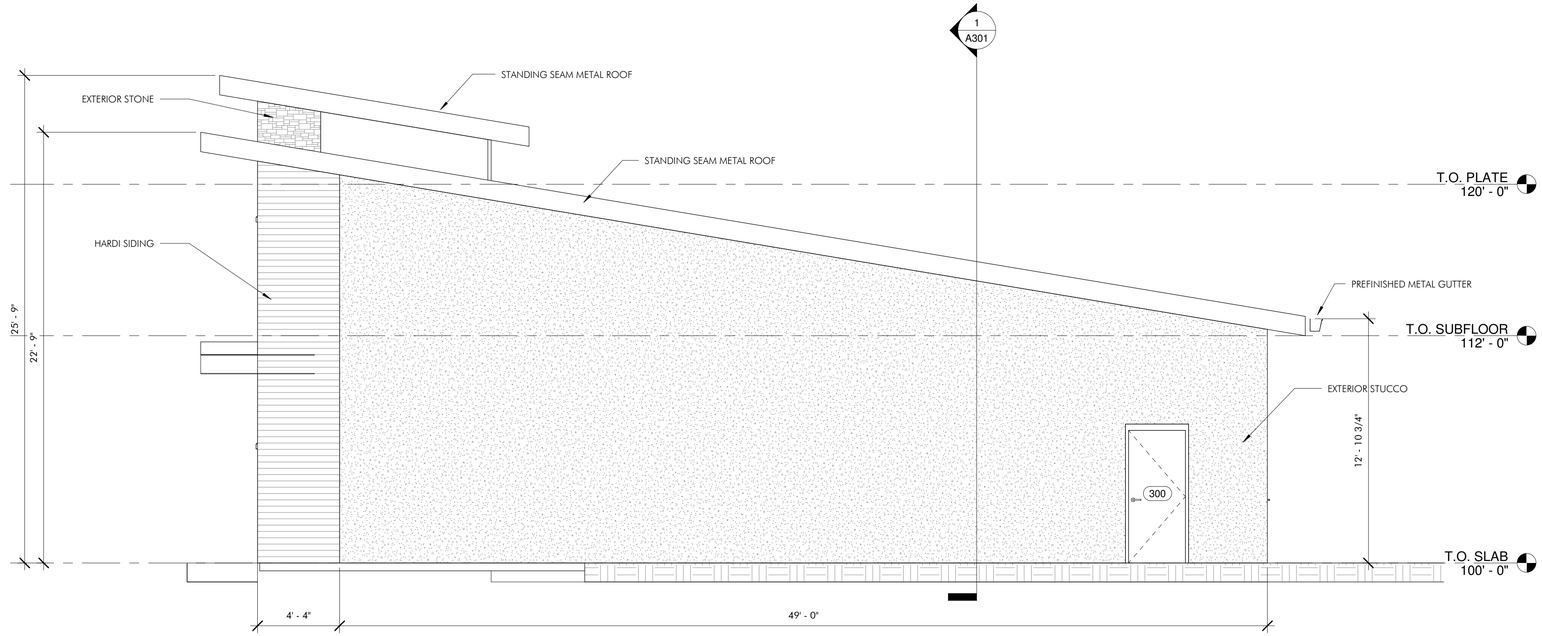

2 SIDE ELEVATION B
1/4" = 1'-0"

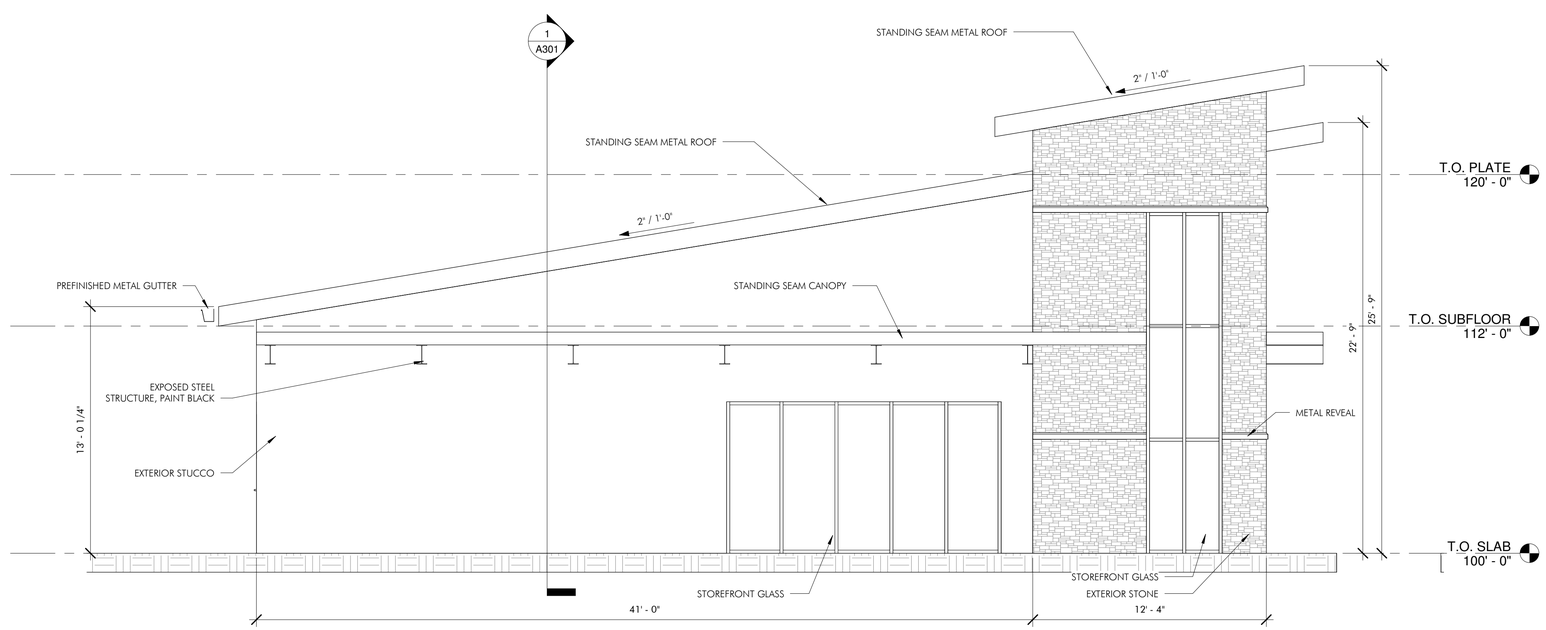

1 SIDE ELEVATION A
1/4" = 1'-0"

MODE design company
103 woods lane
cedar park, tx 78613
ryan@modedc.us | www.modedc.us
+ 1 512 733 1150

NOT FOR REGULATORY APPROVAL, PERMITTING OR CONSTRUCTION

LAVISH SALON
WENDY SCHNEIDER
901 N. VISTA RIDGE BLVD., CEDAR PARK, TX 78613

PROJECT PHASE
SITE PLAN SUBMITTAL
REVISIONS

PROJECT NUMBER
20119-00
DATE ISSUED
9/18/2020
SHEET TITLE
EXTERIOR ELEVATIONS

SHEET NUMBER
37 OF 40

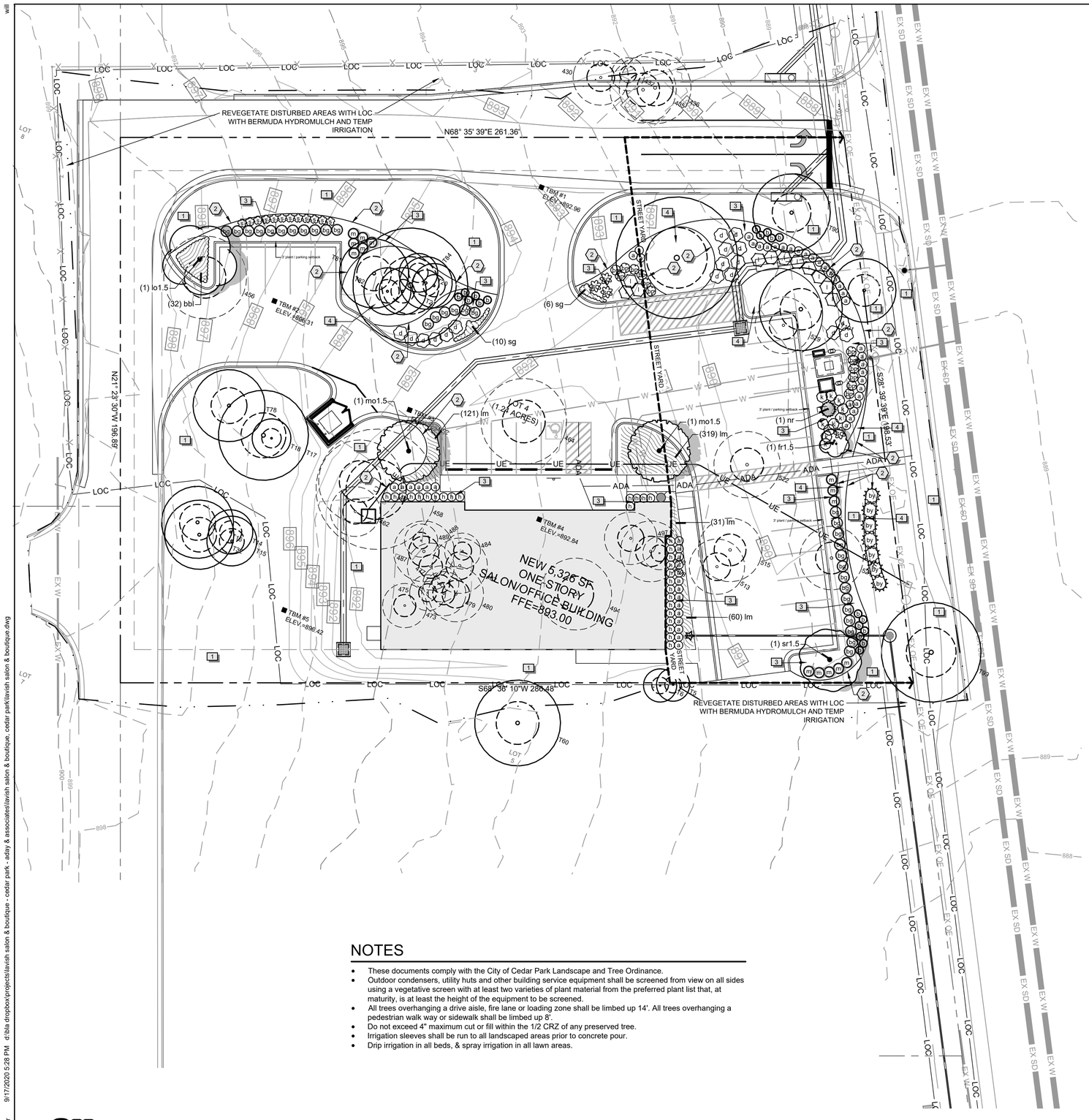

LANDSCAPE CALCULATIONS

STREET YARD	REQUIRED	PROVIDED
• Total Site Area		53,857sf
• Total Street Yard Area		15,967sf
• Landscaped Area	3,194sf (20%)	7,266sf (46%)
•• Trees	4	
••• (1 tree per 1000sf) under 10,000, 3 shrub per 1,000 sf		
••• Ex. 2" to 5" 1 ea. X __=__ trees		
••• Ex. 6" or greater 2 ea. X __=__ trees		
••• -- Ex. Trees + -- Proposed Trees= -- Provided Trees		
•• Shrubs	12	--

CORRIDOR OVERLAY	REQUIRED	PROVIDED
• Total Area		4,949 sf
•• Trees (1 per 1,000sf)	5	5
•• Shrubs (5 per 1,000sf)	25	81

PARKING LOT	REQUIRED	PROVIDED
• Landscaped Area Street Yard	83sf	298sf
•• (90sf per 12 stalls, 13 stalls)		
• Landscaped Area Non-Street Yard	55sf	511sf
•• (60sf per 12 stalls: 11 stalls)		

SCREENING	REQUIRED	PROVIDED
• Parking		
•• Shrubs (259lf X 60%= --lf)	155 lf	243 lf
• Detention Pond (--lf X 60%= --lf)	N/A	--lf
•• Required if fenced		

TREE PRESERVATION	REQUIRED	PROVIDED
• Total Number of Quality Trees		454.5
• Total Trees Kept	227.25 (50%)	234 (51%)

TREE MITIGATION AND REPLACEMENT
- Required caliper inches replaced:
  - •• Protected Tree Replacement (100%)
    - ••• Total Required = 0"

--" to be mitigated by payment to the City of Cedar Park

TREE LIST

REMOVED	TREE #	TYPE	TOTAL INCHES (TRUNKS)	SAVED	REMOVED
X	529 T2	LO	10.25 (8, 4.5)	0	10.25
X	521 T3	LO	11.5	0	11.5
	442 T4	LO	22 (16, 12)	22	0
X	473 T7	LO	8	0	8
X	475 T8	LO	6	0	N/A
X	477 T9	LO	6	0	N/A
X	484 T10	LO	6	0	N/A
X	489 T11	LO	6	0	N/A
X	500 T12	LO	6	0	N/A
X	462 T13	LO	9	9	0
	472 T14	LO	8	8	0
	471 T15	LO	9	9	0
	490 T16	LO	13 (9.5, 7)	13	0
	467 T17	LO	16.25 (11, 10.5)	16.25	0
	468 T18	LO	7	7	N/A
	448 T19	LO	8	8	0
	444 T20	LO	7	7	N/A
	450 T21	LO	8.5	8.5	0
X	456 T28	LO	15	0	15
	492 T32	LO	12.5	12.5	0
X	480 T61	LO	10	0	10
X	479 T62	LO	8	0	8
X	482 T64	LO	10	0	10
X	487 T65	LO	8.5	0	8.5
X	488 T66	LO	11	0	11
X	494 T67	LO	13	0	13
X	497 T68	LO	9.5	0	9.5
X	498 T69	LO	11	0	11
X	513 T70	LO	10	0	10
X	515 T71	LO	11.5	0	11.5
X	522 T72	LO	12	0	12
X	464 T73	LO	15.5	0	15.5
X	458 T74	LO	21.75 (15, 13.5)	0	21.75
X	461 T75	LO	15	0	15
	469 T78	LO	13	13	0
	454 T81	LO	12.5	12.5	0
	452 T82	LO	8.5	8.5	0
	449 T83	LO	20.75 (11, 10.5, 9)	20.75	0
	446 T84	LO	9.5	9.5	0
	440 T90	LO	14	14	0
	516 T99	LO	18	18	0
	527 T101	LO	15	15	0
	525 T2718	LO	11.5	11.5	0
TOTAL INCHES			484.5 (454.5 regulated inches)	234.0	220.5

Legend:
X = Removed
P = Protected Tree
R = Right of Way Tree

Note: Trees under 8" caliper are not calculated in landscape calculations for preservation per Sec 12.12.022 (b)(6)

Off-Site Trees

REMOVED	TREE #	TYPE	TOTAL INCHES (TRUNKS)	SAVED	REMOVED
X	432 T1	LO	6	0	6
X	430 T95	LO	10	0	10
X	435 T96	LO	12	0	12
X	436 T97	LO	13	0	13
	509 T5	LO	6	6	0
	511 T6	LO	6	6	0
	501 T60	LO	15.5 10.5 10	15.5	0
	436 T97	LO	13	13	0
TOTAL INCHES			81.5	40.5	41

REFERENCE NOTES SCHEDULE

SYMBOL	DESCRIPTION
1	Lawn
2	Steel Edge
3	Mulch
4	River Cobble

PLANT SCHEDULE

TREES	COMMON NAME	BOTANICAL NAME	CONT	CAL	SIZE	QTY
lo1.5	Live Oak	Quercus virginiana	-	1.5"Cal	6` H min	1
mo1.5	Monterey Oak	Quercus polymorpha `Monterey`	-	1.5"Cal	6` H min	2
sr1.5	Shumard Red Oak	Quercus shumardii	-	1.5"Cal	6` H min	1
ORNAMENTAL TREES	**COMMON NAME**	**BOTANICAL NAME**	**CONT**	**CAL**	**SIZE**	**QTY**
fr1.5	Forest Pansy Redbud	Cercis canadensis `Forest Pansy` TM	-	1.5"Cal	6` H min	1
nr	Nellie R. Stevens Holly	Ilex x `Nellie R Stevens`	15 gal	1.5"Cal		1

SHRUBS	COMMON NAME	BOTANICAL NAME	CONT	SIZE	QTY
a	Powis Castle Artemisia	Artemisia x `Powis Castle`	1 gal		52
b	Bicolor Iris	Dietes bicolor	1 gal		18
bg	Bush Germander	Teucrium fruticans `Compacta`	5 gal		31
bp	Blue Plumbago	Plumbago auriculata	5 gal		13
by	Beaked Yucca, `Blue Velvet`	Yucca rostrata `Blue Velvet`	5 gal		7
d	Dwarf Palmetto	Sabal minor	5 gal		17
h	Dwarf Burford Holly	Ilex cornuta `Burfordii Nana`	5 gal		29
k	Knock Out Rose	Rosa acicularis `Knock Out`	5 gal		10
l	Loropetalum, Plum Delight	Loropetalum chinense rubrum	5 gal		11
m	Maiden Grass	Miscanthus sinensis `Gracillimus`	5 gal		14
s	Pink Salvia Greggii	Salvia greggii `Pink`	5 gal		12
so	Sotol	Dasylirion texanum	5 gal		4

SHRUB AREAS	COMMON NAME	BOTANICAL NAME	CONT	SIZE	SPACING	QTY
bbl	Big Blue Lilyturf	Liriope muscari `Big Blue`	1 gal		24" o.c.	32
sg	Society Garlic	Tulbaghia violacea	1 gal		24" o.c.	16

GROUND COVERS	COMMON NAME	BOTANICAL NAME	CONT	SPACING	QTY
lm	Lilyturf	Liriope muscari	6"	12" o.c.	531

NOTES

- These documents comply with the City of Cedar Park Landscape and Tree Ordinance.
- Outdoor condensers, utility huts and other building service equipment shall be screened from view on all sides using a vegetative screen with at least two varieties of plant material from the preferred plant list that, at maturity, is at least the height of the equipment to be screened.
- All trees overhanging a drive aisle, fire lane or loading zone shall be limbed up 14'. All trees overhanging a pedestrian walk way or sidewalk shall be limbed up 8'.
- Do not exceed 4" maximum cut or fill within the 1/2 CRZ of any preserved tree.
- Irrigation sleeves shall be run to all landscaped areas prior to concrete pour.
- Drip irrigation in all beds, & spray irrigation in all lawn areas.

NORTH

0 20 40 60 feet
SCALE: 1" = 20'

811 Know what's below. Call before you dig.

will blair 9/17/2020 5:28 PM d:\bla dropbox\projects\lavish salon & boutique - cedar park - aday & associates\lavish salon & boutique, cedar park\lavish salon & boutique.dwg

Rev	Description	Date

Company Name and Address
William S. Blair
(512) 522-8979
Will@BlairLA.com
www.BlairLA.com
100 Congress Ave.
Ste 2000
Austin, TX 78701

BLAIR LANDSCAPE ARCHITECTURE, LLC
QUALITY. INTEGRITY. RELIABILITY.

REGISTERED LANDSCAPE ARCHITECT WILLIAM S. BLAIR 2741 STATE OF TEXAS
William S. Blair
September 17, 2020

Project Name and Address
Lavish Salon & Boutique
901 N Vista Ridge Blvd.
Cedar Park, TX 78613

Sheet Title
Landscape Plan

Design By: Will Blair
Checked By: xxxx
Issue Date: 09/17/2020
Project Number: 20068-LP
Landscape Sheet
38
OF 40

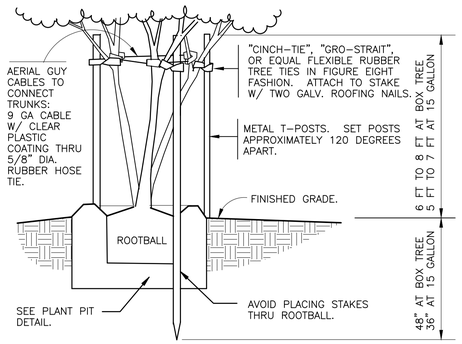

STAKING DETAIL

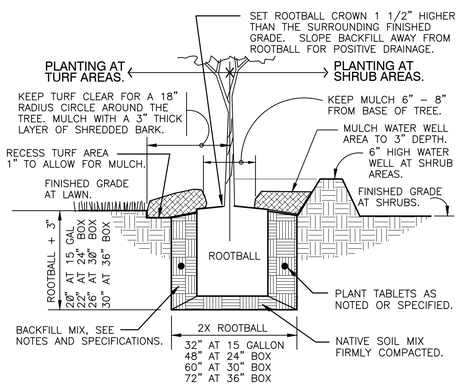

PLANT PIT DETAIL

1 TREE PLANTING MULTI-STAKE

1" = 1'-0"

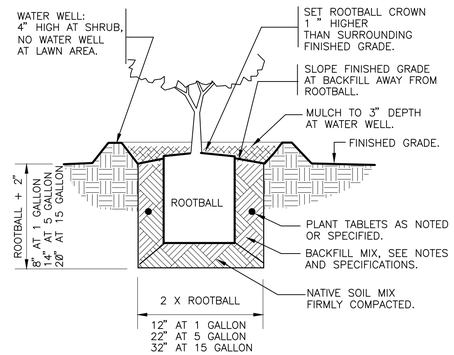

2 SHRUB PLANTING

1" = 1'-0"

IRRIGATION SPECIFICATIONS

1) Irrigation contractor will provide pipes for sleeves and specify locations for placement of sleeves by general contractor prior to pouring concrete or laying asphalt.
2) Irrigation contractor will install all backflow prevention devices and all piping between the point of connection and the backflow preventer as per local governing authorities.
3) Find location of backflow preventer, and automatic controller location shall be approved by the owner's authorized representative.
4) 120 VAC electrical power source at controller location shall be provided by others. The irrigation contractor shall make the final connection from the electrical source to the controller.
5) All sprinkler heads shall be set perpendicular to finish grade unless otherwise specified.
6) The irrigation contractor shall flush and adjust all sprinkler heads and valves for optimum coverage with minimal overspray onto walks, streets, walls, etc.
7) Head location is the responsibility of the irrigation contractor, with the understanding that all landscape areas will receive adequate water to provide for vigorous growth of vegetation.
8) Irrigation contractor will replace or repair all items damaged by his work.
9) All work shall be installed in accordance with applicable codes and ordinances for the City of Cedar Park, Texas and the National Electrical Code and all governing authorities.
10) The irrigation contractor is responsible for reporting any deficiency in water pressure that would affect the operation of the irrigation system.
11) The irrigation contractor shall be a Registered Licensed Irrigator in the State of Texas. Contractor must conform to all codes as stated in section 34 of the Texas Water Code and TNRCC.
12) All remote control valves, gate valves, quick couplers and control wire and computer cable pull pints shall be installed in approved valve boxes.
13) Irrigation Contractor shall procure all permits, licenses, and pay all charges and fees and give all necessary notices for the completion of work.
14) Contractor shall not disturb roots of existing trees. There shall be no machine trenching below the dripline of existing trees.
15) Extreme care shall be exercised in excavating and working near utilities. Contractor shall verify the location and condition of all utilities and be responsible for damage to any utilities.
16) Contractor shall clearly mark all exposed excavations, materials, and equipment. Cover or barricade trenches when the contractor is not on the site. Take all necessary precautions to protect and prevent injury to any persons on the site.
17) All automatic irrigation systems shall be equipped with a controller of dual or multiple programming. Controllers shall have multiple cycle start capacity and a flexible calendar program, including the capacity of being set to water every five days. All automatic irrigation systems shall be equipped with a rain sensor shutoff device.
18) Irrigation in Texas is regulated by the Texas Commission on Environmental Quality, www.tceq.texas.gov, (512) 239-1000

LANDSCAPE MAINTENANCE REQUIREMENTS

The owner shall be responsible for:

1) Regular maintenance of all required landscape areas and plant materials in a vigorous and healthy condition, free from diseases, pests, weeds, and litter. This maintenance shall include weeding, watering, fertilization, pruning, mowing, edging, mulching or other needed maintenance, in accordance with generally accepted horticultural practice.
2) The repair or replacement of required landscape structures (walls, fences, etc.) to a structurally sound condition.
3) The regular maintenance, repair, or replacement, where necessary, of any required screening or buffering.
4) All open space areas that are to be preserved as natural plant communities shall be trimmed, at least once a year, of all exotic vegetation, lawn grasses, trash, or other debris. Natural area should be mulched, pruned and otherwise maintained so that plants are vigorous.

REFERENCE NOTE SPECIFICATIONS

LAWN AREAS - SOD / HYDROMULCH / SEED MIX

1. Lawn, Bermuda "Tif 419" Sod, provide 2" of topsoil tilled into existing. Top of lawn 1" below top of adjacent concrete/hardscape. Flatten sod with lawn roller. Provide spray irrigation. Temporary irrigation only within septic fields or Right of Way (R.O.W.). Pre emergent weed treatment recommended.

STEEL EDGE

2. Steel edge, 3/16" x 4" landscape edging as manufactured by Ryerson, or equal, dark green and furnished with steel stakes. Install edging in smooth curves free of kinks. Final height of edging to be 1" above height of soil mat of sod.

MULCHES / GRAVELS / RIVER ROCK / BOULDERS

3. Mulch, Native Hardwood. 3" deep with 6" of "Growers Mix" soil (40% compost, 40% loam, 10% sand) tilled into existing soil in all areas of the bed. Drip irrigation. Ensure that drip line is placed above rootballs.
4. River Cobble, Arizona. 70% 1-3" size mixed with 30% 3-8" size. 3" deep, weed barrier cloth beneath. If used in areas near plants provide irrigation bubblers to plants and use the following bed prep: 6" of "Growers Mix" soil (40% compost, 40% loam, 10% sand) tilled into existing soil in all areas of the bed. Drip irrigation. Ensure that drip line is placed above rootballs.

LANDSCAPE PLANTING SPECIFICATIONS

1) Guarantee - All labor, materials and plants will be guaranteed for a period of twelve (12) months after the final acceptance of work by Owner. All plants that have died or are unhealthy shall be replaced no later than 30 days from the anniversary date of the final acceptance. This guarantee does not apply to plant material that dies due to abnormal freezes, hail, abnormal high winds, or other acts of God, vandalism or lack of normal maintenance and watering. This guarantee does not apply to annual plantings.
2) Contractor is to verify all site dimensions and layout prior to the commencement of landscape construction. Any discrepancies between the drawings and the actual site conditions shall be brought to the attention of the owner's representative immediately.
3) Contractor is responsible for verification of the location of all underground utilities, repair to said utilities as a result of the work of the contractor shall be the responsibility of the contractor. Refer to the drawing for any additional information.
4) Contractor is responsible for maintaining positive drainage in all shrub and turf planting areas.
5) Tree pits are to be the same depth as the root ball and 24" wider. Prior to planting the tree pit should be filled with water to check for good drainage. If water does not drain the Contractor should check with the Landscape Architect to relocate the tree.
6) Trees should be positioned in the center of the tree pits, back filled with soil that was excavated from the pit until the surface is level with the surrounding area and the crown of the plant is at the finished grade. Build a water basin around the tree (36" dia.). Water until planting pit is soaked and soil has settled. Add soil necessary to bring soil level flush with surrounding ground. Fill the basin with three (3) inches of compost.
7) All plant material shall conform to the standards of the latest edition of "American Standard for Nursery Stock" by The American Association of Nurserymen and "Grades and Standards" by The Texas Association of Nurserymen. A plant shall be dimensioned as it stands in its natural position. All plants shall be at least the minimum size indicated. Larger stock is acceptable at no additional cost, and providing that the larger plants will not be cut back to size indicated.
8) It is the landscape contractor's responsibility to provide plants free of disease or pests.
9) Space specified quantity of plant materials to evenly fill designated areas, adjusting spacing indicated on the drawings as required. Landscape architect or owner to have final approval of locations of all trees, shrubs and groundcover beds.
10) Contractor is responsible for removing all clods, rocks, concrete, trash and any other debris from beds prior to adding soil ix or plant material.
11) All planting beds should have three (3) inches of compost tilled into them to a depth of six (6) inches. A three (3) inch layer of shredded hardwood bark mulch should be applied to all beds after planting is completed. Four (4) inch pots and ground cover may be planted through the mulch.
12) Contractor is responsible for removal of trash and repair of hazardous conditions (tools, open holes, et.) on a daily basis by the end of the work day.
13) Water all plantings in bed areas thoroughly on a daily basis until final acceptance.
14) To prepare turf areas treat them with a selective herbicide two weeks prior to sodding or seeding. Then rake area to remove stones, sticks and other debris. Add two (2) inches of topsoil to the turf area. Rake area to a finish grade (1" below walks and curbs).
15) If sodding is to take place the sod should be gathered and planted within a 48 hour period. Lay the sod to form a solid mass with tight fitting joints. Butt ends and sides of sod and offset joints in adjacent courses. Roll sod to ensure good contact with soil. If planting on a slope be sure to lay courses parallel to the contours and secure sod with pins if necessary. Site preparation and maintenance will be the same for hydromulching.
16) Water sod daily so as to not allow turf blades to wilt. If necessary water twice per day.
17) Apply slow release fertilizer 15-15-15 or equal at a rate of 2 lbs. per 100 s.f. to all turf or planted areas.
18) Contractor shall keep all construction areas and public streets free from accumulation of waste material. Upon completion of construction and prior to final approval contractor shall thoroughly clean the site of all trash, spilled soil, and litter, etc. that has resulted from landscape construction operations. Repair all damage to finish grade including tailings from excavations, wheel ruts, etc. caused from construction. All debris, trash and excess materials and equipment shall be removed from the site prior to final acceptance.
19) Remove all tags, ribbons and wires from all newly installed plant material.

Rev	Description	Date

Company Name and Address
William S. Blair
(512) 522-8979
Will@BlairLA.com
www.BlairLA.com
100 Congress Ave.
Ste 2000
Austin, TX 78701

BLAIR LANDSCAPE ARCHITECTURE, LLC
QUALITY. INTEGRITY. RELIABILITY.

William S. Blair
September 17, 2020

Project Name and Address

Lavish Salon & Boutique
901 N Vista Ridge Blvd.
Cedar Park, TX 78613

Sheet Title

Landscape Details & Specifications

Design By: Will Blair
Checked By: xxxx
Issue Date: 09/17/2020
Project Number: 20068-LP
Landscape Sheet
39
OF 40

will blair 9/17/2020 5:35 PM d:\bla dropbox\projects\lavish salon & boutique - cedar park - aday & associates\lavish salon & boutique, cedar park\lavish salon & boutique.dwg

Schedule

Symbol	Label	Image	QTY	Manufacturer	Catalog Number	Description	Filename	LLF	Wattage	Notes
	A		2	Lithonia Lighting	RSX1 LED P4 40K R4 HS	RSX Area Fixture Size 1 P4 Lumen Package 4000K CCT Type R4 Distribution with HS Shield	RSX1_LED_P4_40K_R4_HS.ies	0.95	133.1431	
	B		1	Lithonia Lighting	RSX1 LED P4 40K R3 HS	RSX Area Fixture Size 1 P4 Lumen Package 4000K CCT Type R3 Distribution with HS Shield	RSX1_LED_P4_40K_R3_HS.ies	0.95	133.1431	
	C		3	Spectrum Lighting		Warehouse Shade 16" Nom. Diam x 11" H	SP-00642 – WS1611GV-55L35K-EXTF2-WHI.ies	0.95	39	
	D		2	Lithonia Lighting	WDGE1 LED P1 40K 80CRI VW	WDGE1 LED WITH P1 - PERFORMANCE PACKAGE, 4000K, 80CRI, VISUAL COMFORT WIDE OPTIC	WDGE1_LED_P1_40K_80CRI_VW.ies	0.95	10.0002	

Statistics

Description	Symbol	Avg	Max	Min	Max/Min
PROPERTY LINE	+	0.1 fc	0.4 fc	0.0 fc	N/A
SITE	+	0.8 fc	15.0 fc	0.0 fc	N/A

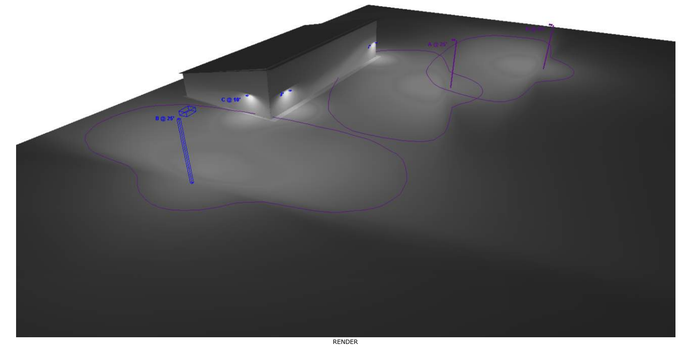

RENDER

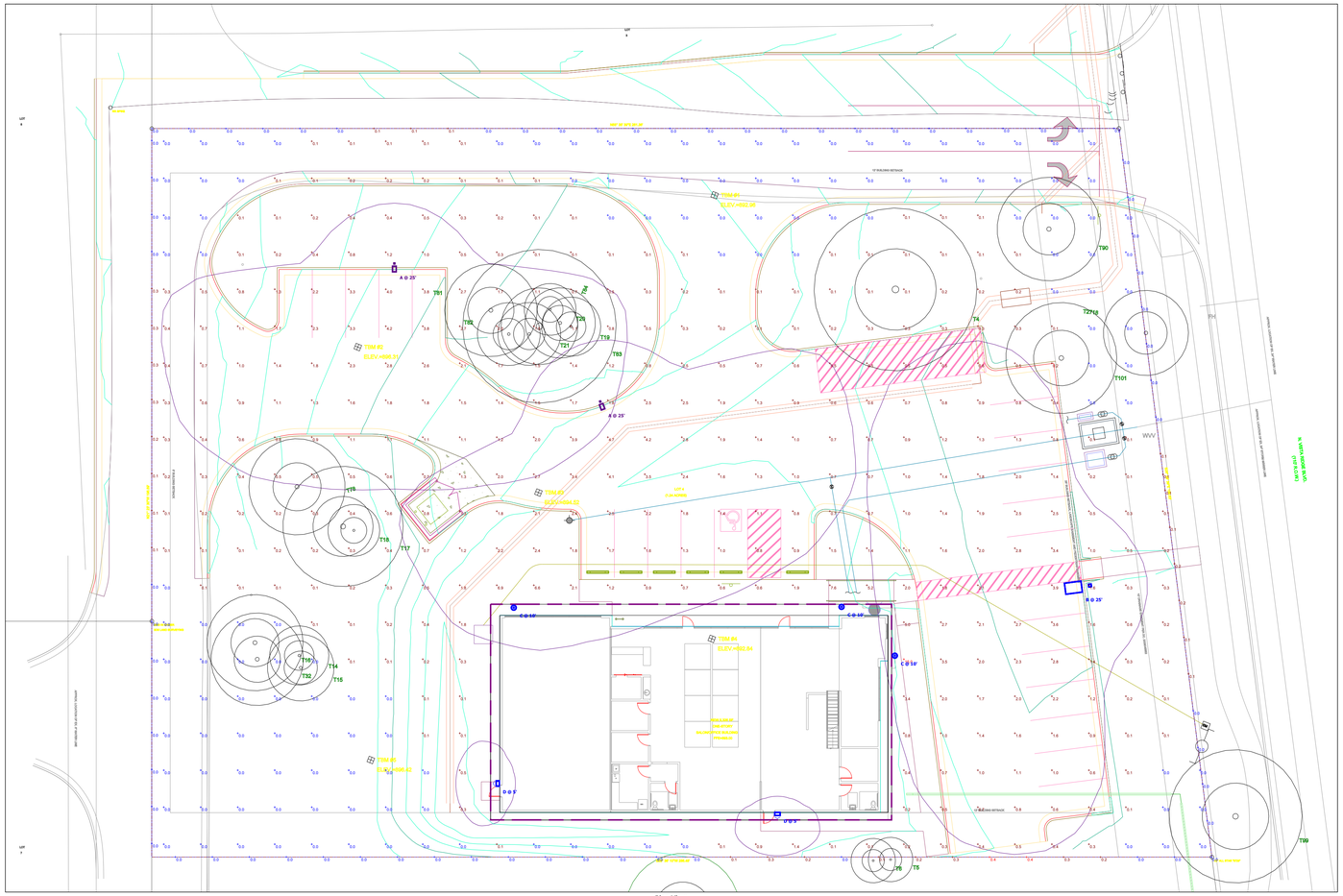

Plan View
Scale - 1" = 12ft

LITHONIA - EXTERIOR

1. Readings shown are taken at grade and are based on a total LLF shown on luminaire schedule.
2. Mounting heights are listed next to fixture type tag.
3. Calculations do not take into account shadowing from items such as trees and shrubs.
4. Verify fixture and pole nomenclature on spec sheets.
5. Consider integral lighting controls on fixture heads.

DISCLAIMER

This architectural lighting submittal is provided only for informational purposes and is strictly based on the information provided to Spectrum Lighting Austin. It is is provided without warranty as to accuracy, completeness, reliability or otherwise. If the information (including but not limited to floor-plans, reflected ceiling plans, electrical plans and specifications) provided to Spectrum Lighting is incomplete or not current (i.e., newer versions exist), the accuracy of proposed design may be adversely affected. Once this lighting submittal is received by the customer , it is the obligation of the customer to consult with a professional engineering advisor to determine whether the proposed design meets the applicable project requirements for lighting system performance, code compliance, safety, suitability, and effectiveness for use in a particular application. In no event will Spectrum Lighting Austin be responsible for any loss resulting from any use of any information contained in this lighting submittal.

SPECTRUM LIGHTING AUSTIN

LAVISH SALON AND BOUTIQUE

Designer
DOUGLAS BRAUN
Date
9/18/2020
Scale
Not to Scale
Drawing No.
20-36853
Summary
51

Recommended Maintenance Plan

Edwards Aquifer Region

1.0 Inspection Schedule

- A preventative maintenance cleanout schedule is the most valuable tool for maintaining the proper operation of Park StormTrooper™. Interceptor maintenance costs will be greatly reduced if a good housekeeping plan for the property is developed i.e., trash pickup, lawn maintenance, dumpster control, etc.

- Park StormTrooper™ interceptors have no moving parts. The manufacturer recommends ongoing quarterly inspections for accumulated pollutants. Pollutant accumulation may vary from year to year. Quarterly inspections ensure that the system is serviced at appropriate times. **Owner must observe site conditions and determine whether or not pollutant loads require a more frequent inspection schedule.** Table 1 lists recommended maximum capacities of oil and sediment. Professional vacuum services should be considered when capacities meet or exceed these recommended levels.

Table 1. StormTrooper™ Maintenance Levels

Model Number	Oil Depth	Sediment Depth
SWAQ-05	12”	12”
SWAQ-10	12”	12”
SWAQ-20	12”	12”
SWAQ-25	12”	12”
SWAQ-40	12”	12”
SWAQ-70	12”	12”
SWAQ-110	12”	12”

It is very important to keep a record of each inspection; therefore, an inspection and maintenance form has been attached for your use.

2.0 Inspection Procedures

- Easiest observation and maintenance is best accomplished during non-flow (dry weather) conditions, 5-7 days after the most recent rain.

- Remove interceptor covers or open hatchway to observe conditions. Remove hatchway safety net ("EnterNet"), if installed. Observe for trash and debris and remove if necessary. This is the most important maintenance requirement.

- Coalescing plates are self-cleaning and seldom require maintenance unless damaged. Do not walk on or stand on plate packs. Call ParkUSA (888-611-PARK) for replacement parts.

- Check of the depth (level) of oil and sediment with a tank sampler device designed for this purpose. The tank sampler requires a dipstick tube equipped with a ball valve (typically a Sludge Judge® or Core Pro®).

- Make sure the dipstick tube goes completely to the bottom. Lift the dipstick tube out of the unit and keep it in a vertical position and read the level of sediment and oils from the gauge on the dipstick. Record pollutant levels on your StormTrooper™ Monitoring / Maintenance Report. If either pollutant(s) in the dipstick tube (sediments or oils) exceed the levels indicated on Table 1, maintenance of the StormTrooper™ is required. Upon completing the recording of pollutant levels, the dipstick tube is then drained back into the inlet side of the StormTrooper™. This ensures that the pollutants in the dipstick tube do not leave the unit.

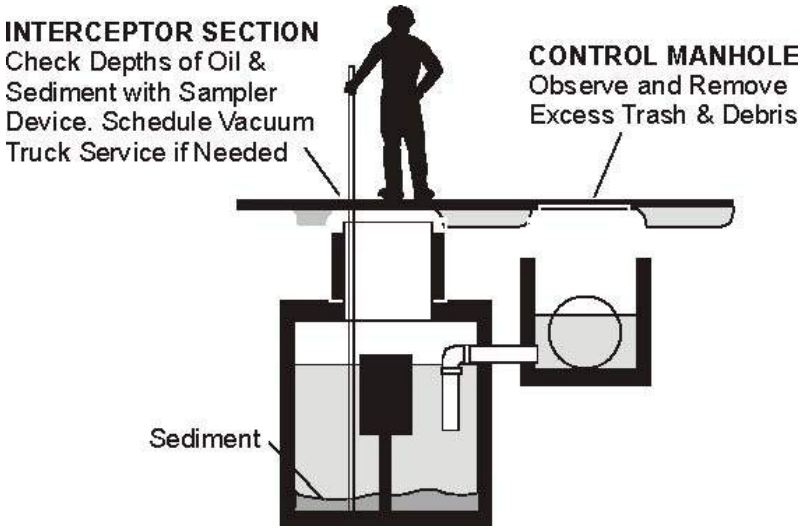

3.0 Maintenance Procedures

- Park Environmental Equipment, manufacturers of StormTrooper™, recommends that a professional pumping contractor licensed to remove and dispose waste from underground utilities be used to pump out the interceptor.

- Pull all manhole covers. Be sure all sections of the interceptor are cleaned. **If a control/bypass manhole is part of the system, it should be inspected and serviced with the interceptor.**

- If the coalescing media option is utilized, visually inspected the plates for any heavy build-up of oil, grease or sludge. Typically, the plates are self-cleaning and require little maintenance. If buildup of material is evident, either remove the media from the frame or clean the plate pack in place. Removing media is accomplished by attaching a lifting device in the lifting lug provided (top center of the frame), and then pull straight up. Media plates may be cleaned in place with special steam cleaning nozzle attachment that provides a flat spray.

- **Facet's MPak® plates are designed to be cleaned in place using a special cleaning wand and city water pressure.** The wand has a connection just like an ordinary garden hose and is equipped with a small conical strainer in the connection so that solids in the inlet water will not clog the cleaning holes.

  For cleaning in place, connect a pressure water hose (at least 60 psig) to the special cleaning wand. Provide a vacuum truck (or other means of disposing of the sludge and dirt) in the vessel. Turn on the water to produce a spray from the wand and insert the tip of the wand slowly into each hole of the plate pack, starting at the upstream end. As the water flushes the dirt out of the plate packs, it should be removed by the vacuum hose or directed to an oil water sewer if one is available. For cleaning outside of the vessel, remove the plate packs and other internals (except bolted-in internals). Flush with hose and cleaning wand to oil water drain.

  (**NOTE:** The cleaning wand produces a vigorous spray. Operators should wear waterproof clothing and goggles or face mask.)

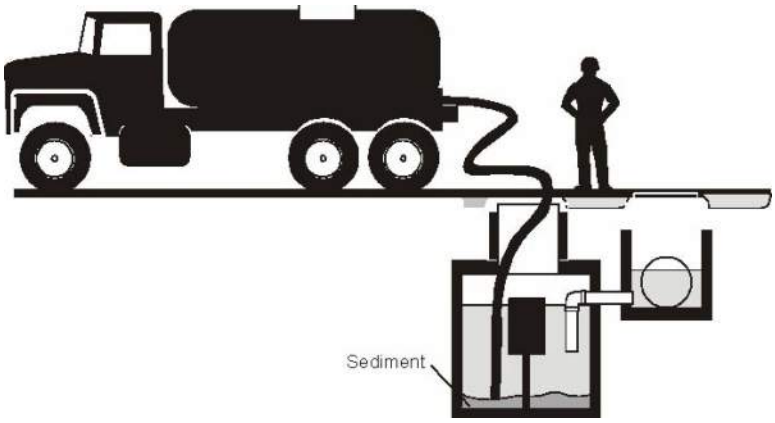

- Typically, the vacuum truck will skim off the oil and other floatables. In most geographic areas the sediment can be disposed of in a sanitary landfill once dewatered. Pollutants are not allowed to be discharged back into the sanitary or storm sewer systems.

- After cleaning via vacuum truck, pumping contractor can refill the StormTrooper™ with water previously drawn out of unit, or haul water to disposal facility and let natural rainfall recharge the unit during future rain events. Replace manhole covers.

- After cleanout is accomplished, obtain a copy of the service truck manifest. Update the StormTrooper™ Monitoring/Maintenance Report and attach a copy of the manifest to the report.

4.0 Safety and Environmental Considerations

- All normal safety precautions should be taken with this equipment to prevent accidents and fires. Normal fire prevention measures must be taken to prevent fire danger from the separated oil.

- Care should be taken to keep the area around the interceptor clean to prevent accidents.

- Dispose of the separated oil properly, preferably by recycling.

- The atmosphere inside the Park Environmental Equipment StormTrooper™ is a confined space and may be hazardous. Entry is not recommended without proper equipment. Follow OSHA confined space entry requirements.

- SAFETY AND ENVIRONMENTAL PROTECTION ARE THE RESPONSIBILITY OF THE USER. PARK EQUIPMENT CO. ASSUMES NO LIABILITY FOR MISUSE OF THIS SEPARATOR OR FOR USE OUTSIDE THE PARAMETERS FOR WHICH IT IS DESIGNED.

(Optional) StormTrooper® Interceptor Monitoring / Maintenance Report

Year	
Company Name:	
Address:	
City/State/Zip:	
Contact Phone	
Contact Name:	
StormTrooper® Model	
GPM	

Quarterly Record Keeping

Maintenance Activity	Mar	June	Sept	Dec
Non-Structural Controls				
Manhole Debris Cleaned				
Interceptor Debris Cleaned				
Hose Off Inside Walls				
Debris Screens Cleaned				
Mowing of Stormtrooper				
Structural Controls				
Oil Depth				
Solids Depth				
Pumped Out				
Inspections				
Quarterly				
Annually				

"X" identifies the months in which the activity will be performed (at a minimum).

*Provided to residents at move-in and available at community locations.

**Segment removed from basin per chart on Table 4 or at least one year from move-in of location.

I certify that I supervised or performed StormTrooper® monitoring per local codes and manufacturer's recommended monitoring and maintenance procedures on the dates listed above.

Signed: Wendy Schneider

Owner Or Owner Representative

Print Name: Wendy Schneider

Date Submitted: 10/1/2020

Per the *"Permanent Stormwater Section" for Regulated Activities on the Edwards Aquifer Recharge Zone and Relating to 30 TAC §213.5(b)(4)(C), (D)(li), (E), and (5), Effective June 1, 1999 a plan for the inspection, maintenance, repair, and, if necessary, retrofit of the permanent BMPs and measures is provided herein.*

This plan has been prepared and certified by the engineer designing the permanent BMPs and measures. This plan has been signed by the owner or responsible party. The plan includes procedures for documenting inspections, maintenance, repairs, and, if necessary, retrofits as well as a discussion of record keeping procedures.

I, JENNIFER HENDERSON, a Professional Engineer duly licensed to practice in the State of Texas do hereby certify that the information presented in this document was prepared under my direction and supervision and complies with the proper inspection and maintenance requirements determined by the manufacturer.

Signature: _____ Date: 10/5/2020

License Number: 116883
Address: 102 W. MORROW
SUITE 101
GEORGETOWN, TX 78626

Phone Number: 512.350.6228

STATE OF TEXAS
JENNIFER L. HENDERSON
116883
LICENSED
PROFESSIONAL ENGINEER

10/5/2020
Engineers Seal and Signature

I, Wendy Schneider (Name), acting as Owner (Officer Position) for LaushSalon & Boutique (Permittee's Name), have read the Recommended StormTrooper Maintenance Plan, as well as the associated drawings, and agree to implement the requirements described herein.

Signature: _____ Date: 10/2/2020

Address: 1106 Lynsedko Drive
Cedar Park, TX 78613

Phone Number: 512-810-0359

ATTACHMENT P

Measures for Minimizing Surface Stream Contamination

A combination of the stormtrooper system and vegetative filter strips will serve to prevent TSS and pollutant loads from entering surface drainages that flow toward the creek. The Stormtrooper system will provide for 100% of the site's TSS removal from on-site generated stormwater flows. Please see attachment E for a detailed analysis along with the construction plan set.

Temporary Stormwater Section

Texas Commission on Environmental Quality

for Regulated Activities on the Edwards Aquifer Recharge Zone and Relating to 30 TAC §213.5(b)(4)(A), (B), (D)(I) and (G); Effective June 1, 1999

To ensure that the application is administratively complete, confirm that all fields in the form are complete, verify that all requested information is provided, consistently reference the same site and contact person in all forms in the application, and ensure forms are signed by the appropriate party.

Note: Including all the information requested in the form and attachments contributes to more streamlined technical reviews.

Signature

To the best of my knowledge, the responses to this form accurately reflect all information requested concerning the proposed regulated activities and methods to protect the Edwards Aquifer. This **Temporary Stormwater Section** is hereby submitted for TCEQ review and executive director approval. The application was prepared by:

Print Name of Customer/Agent: Jennifer Henderson, P.E.

Date: 10/07/20

Signature of Customer/Agent:

Regulated Entity Name: Lavish Salon and Boutique

Project Information

Potential Sources of Contamination

Examples: Fuel storage and use, chemical storage and use, use of asphaltic products, construction vehicles tracking onto public roads, and existing solid waste.

1. Fuels for construction equipment and hazardous substances which will be used during construction:

   ☐ The following fuels and/or hazardous substances will be stored on the site: _____

   These fuels and/or hazardous substances will be stored in:

   ☐ Aboveground storage tanks with a cumulative storage capacity of less than 250 gallons will be stored on the site for less than one (1) year.

- ☐ Aboveground storage tanks with a cumulative storage capacity between 250 gallons and 499 gallons will be stored on the site for less than one (1) year.
- ☐ Aboveground storage tanks with a cumulative storage capacity of 500 gallons or more will be stored on the site. An Aboveground Storage Tank Facility Plan application must be submitted to the appropriate regional office of the TCEQ prior to moving the tanks onto the project.

☒ Fuels and hazardous substances will not be stored on the site.

2. ☒ **Attachment A - Spill Response Actions**. A site specific description of the measures to be taken to contain any spill of hydrocarbons or hazardous substances is attached.
3. ☒ Temporary aboveground storage tank systems of 250 gallons or more cumulative storage capacity must be located a minimum horizontal distance of 150 feet from any domestic, industrial, irrigation, or public water supply well, or other sensitive feature.
4. ☒ **Attachment B - Potential Sources of Contamination**. A description of any activities or processes which may be a potential source of contamination affecting surface water quality is attached.

Sequence of Construction

5. ☒ **Attachment C - Sequence of Major Activities**. A description of the sequence of major activities which will disturb soils for major portions of the site (grubbing, excavation, grading, utilities, and infrastructure installation) is attached.
   - ☒ For each activity described, an estimate (in acres) of the total area of the site to be disturbed by each activity is given.
   - ☒ For each activity described, include a description of appropriate temporary control measures and the general timing (or sequence) during the construction process that the measures will be implemented.
6. ☒ Name the receiving water(s) at or near the site which will be disturbed or which will receive discharges from disturbed areas of the project: 1244A Brushy Creek

Temporary Best Management Practices (TBMPs)

Erosion control examples: tree protection, interceptor swales, level spreaders, outlet stabilization, blankets or matting, mulch, and sod. Sediment control examples: stabilized construction exit, silt fence, filter dikes, rock berms, buffer strips, sediment traps, and sediment basins. Please refer to the Technical Guidance Manual for guidelines and specifications. All structural BMPs must be shown on the site plan.

7. ☒ **Attachment D – Temporary Best Management Practices and Measures**. TBMPs and measures will prevent pollution of surface water, groundwater, and stormwater. The construction-phase BMPs for erosion and sediment controls have been designed to retain sediment on site to the extent practicable. The following information is attached:

- ☒ A description of how BMPs and measures will prevent pollution of surface water, groundwater or stormwater that originates upgradient from the site and flows across the site.
- ☒ A description of how BMPs and measures will prevent pollution of surface water or groundwater that originates on-site or flows off site, including pollution caused by contaminated stormwater runoff from the site.
- ☒ A description of how BMPs and measures will prevent pollutants from entering surface streams, sensitive features, or the aquifer.
- ☒ A description of how, to the maximum extent practicable, BMPs and measures will maintain flow to naturally-occurring sensitive features identified in either the geologic assessment, TCEQ inspections, or during excavation, blasting, or construction.

8. ☒ The temporary sealing of a naturally-occurring sensitive feature which accepts recharge to the Edwards Aquifer as a temporary pollution abatement measure during active construction should be avoided.

   - ☐ **Attachment E - Request to Temporarily Seal a Feature**. A request to temporarily seal a feature is attached. The request includes justification as to why no reasonable and practicable alternative exists for each feature.
   - ☒ There will be no temporary sealing of naturally-occurring sensitive features on the site.

9. ☒ **Attachment F - Structural Practices**. A description of the structural practices that will be used to divert flows away from exposed soils, to store flows, or to otherwise limit runoff discharge of pollutants from exposed areas of the site is attached. Placement of structural practices in floodplains has been avoided.

10. ☒ **Attachment G - Drainage Area Map**. A drainage area map supporting the following requirements is attached:

    - ☐ For areas that will have more than 10 acres within a common drainage area disturbed at one time, a sediment basin will be provided.
    - ☐ For areas that will have more than 10 acres within a common drainage area disturbed at one time, a smaller sediment basin and/or sediment trap(s) will be used.
    - ☐ For areas that will have more than 10 acres within a common drainage area disturbed at one time, a sediment basin or other equivalent controls are not attainable, but other TBMPs and measures will be used in combination to protect down slope and side slope boundaries of the construction area.
    - ☐ There are no areas greater than 10 acres within a common drainage area that will be disturbed at one time. A smaller sediment basin and/or sediment trap(s) will be used in combination with other erosion and sediment controls within each disturbed drainage area.

☒ There are no areas greater than 10 acres within a common drainage area that will be disturbed at one time. Erosion and sediment controls other than sediment basins or sediment traps within each disturbed drainage area will be used.

11. ☐ **Attachment H - Temporary Sediment Pond(s) Plans and Calculations**. Temporary sediment pond or basin construction plans and design calculations for a proposed temporary BMP or measure have been prepared by or under the direct supervision of a Texas Licensed Professional Engineer. All construction plans and design information must be signed, sealed, and dated by the Texas Licensed Professional Engineer. Construction plans for the proposed temporary BMPs and measures are attached.

☒ N/A

12. ☒ **Attachment I - Inspection and Maintenance for BMPs.** A plan for the inspection of each temporary BMP(s) and measure(s) and for their timely maintenance, repairs, and, if necessary, retrofit is attached. A description of the documentation procedures, recordkeeping practices, and inspection frequency are included in the plan and are specific to the site and/or BMP.

13. ☒ All control measures must be properly selected, installed, and maintained in accordance with the manufacturer's specifications and good engineering practices. If periodic inspections by the applicant or the executive director, or other information indicate a control has been used inappropriately, or incorrectly, the applicant must replace or modify the control for site situations.

14. ☒ If sediment escapes the construction site, off-site accumulations of sediment must be removed at a frequency sufficient to minimize offsite impacts to water quality (e.g., fugitive sediment in street being washed into surface streams or sensitive features by the next rain).

15. ☒ Sediment must be removed from sediment traps or sedimentation ponds not later than when design capacity has been reduced by 50%. A permanent stake will be provided that can indicate when the sediment occupies 50% of the basin volume.

16. ☒ Litter, construction debris, and construction chemicals exposed to stormwater shall be prevented from becoming a pollutant source for stormwater discharges (e.g., screening outfalls, picked up daily).

Soil Stabilization Practices

Examples: establishment of temporary vegetation, establishment of permanent vegetation, mulching, geotextiles, sod stabilization, vegetative buffer strips, protection of trees, or preservation of mature vegetation.

17. ☐ **Attachment J - Schedule of Interim and Permanent Soil Stabilization Practices**. A schedule of the interim and permanent soil stabilization practices for the site is attached.

18. ☒ Records must be kept at the site of the dates when major grading activities occur, the dates when construction activities temporarily or permanently cease on a portion of the site, and the dates when stabilization measures are initiated.

19. ☒ Stabilization practices must be initiated as soon as practicable where construction activities have temporarily or permanently ceased.

Administrative Information

20. ☒ All structural controls will be inspected and maintained according to the submitted and approved operation and maintenance plan for the project.

21. ☒ If any geologic or manmade features, such as caves, faults, sinkholes, etc., are discovered, all regulated activities near the feature will be immediately suspended. The appropriate TCEQ Regional Office shall be immediately notified. Regulated activities must cease and not continue until the TCEQ has reviewed and approved the methods proposed to protect the aquifer from any adverse impacts.

22. ☒ Silt fences, diversion berms, and other temporary erosion and sediment controls will be constructed and maintained as appropriate to prevent pollutants from entering sensitive features discovered during construction.

TEMPORARY STORMWATER SECTION

ATTACHMENT A

SPILL RESPONSE ACTIONS

Contractors who work onsite with materials which could potentially cause pollution shall provide for the following measures to help reduce the stormwater impacts of leaks and/or spills.

Education of Employees or Subcontractors Who Handle Materials Which Can Cause Pollution

1. Employees should know what a "significant spill" is for each material they use, and what is the appropriate response for "significant" and "insignificant" spills. Employees should also be aware of when a spill must be reported to the TCEQ. Information is available in 30 TAC 327.4 and 40 CFR 302.4.
2. Educate employees and subcontractors on the potential dangers to humans and the environment from spills and leaks and provide training in spill prevention and cleanup.
3. Hold regular meetings to discuss and reinforce appropriate disposal procedures (incorporate into regular safety meetings).
4. Establish a continuing education program to indoctrinate new employees, who will use or handle potential pollutants.
5. Provide for a superintendent or representative to oversee and enforce proper spill prevention and control measures.

General Measures

1. To the extent that work can be accomplished safely, spills of oil, petroleum products, and substances listed under 40 CFR part 110,117, and 302, and sanitary and septic wastes should be contained and cleaned up immediately.
2. Store hazardous materials and waste in covered containers and protect from vandalism.
3. Place spill cleanup materials where it will be readily accessible.
4. Spills should be covered and protected from stormwater run-on during rainfall to the extent that it does not compromise clean-up activities.
5. Do not bury spills onsite.
6. Store and dispose of used clean up materials, contaminated materials, and recovered spill material that is no longer suitable for the intended purpose in conformance with the provisions in applicable BMP"s.
7. Do not allow water used for cleaning and decontamination to enter storm drains or watercourse. Collect and dispose of contaminated water in accordance with applicable regulations.
8. Contain contaminate water overflow or minor water spillage and do not allow it to discharge into drainage facilities or watercourses.
9. Place Material Safety Data Sheets (MSDS), as well as proper storage, cleanup, and spill reporting instructions for hazardous materials stored or used on the project site in an open, conspicuous, and accessible location.
10. Keep waste storage areas clean, well-organized, and equipped with ample cleanup supplies as appropriate for the materials being stored. Perimeter controls, containment structures, covers, and liners should be repaired or replaced as needed to maintain proper function.

TEMPORARY STORMWATER SECTION

ATTACHMENT A (CONT'D)

SPILL RESPONSE ACTIONS

Cleanup

1. Clean up leaks and spills immediately, or as soon as it is safely practical.
2. Use a rag for small spills on paved surfaces, a damp mop for general cleanup, and absorbent materials for larger spills. If the spilled material is hazardous, then the used cleanup materials are also hazardous and must be disposed of as hazardous waste.
3. Never hose down or bury dry material spills. Clean up as much of the material as possible and dispose of properly.

Minor Spills

1. Minor spills such as small quantities of oil, gasoline, paint, etc, should be controlled by the first responder at the discovery of the spill.
2. Use absorbent materials on small spills rather than hosing down or burying the spill.
3. Absorbent materials should be promptly removed and disposed of properly.
4. Follow the practice below for a minor spill:
    a. Contain the spread of the spill.
    b. Recover spilled materials.
    c. Clean the contaminated area and properly dispose of contaminated materials.

Semi-Significant Spills

Semi-significant spills may also be controlled by the first responder along with the aid of other personnel such as labors and the foreman, etc. This response may require the cessation of all other activities.

Spills should be cleaned up immediately, or as soon as safely practical

1. Contain spread of the spill.
2. Notify the project foreman immediately.
3. If the spill occurs on paved or impermeable surfaces, clean up using "dry" methods (absorbent materials, cat litter and/or rags). Contain the spill by encircling absorbent materials and do not let the spill spread widely.
4. If the spill occurs in dirt areas, immediately contain the spill by constructing an earthen dike. Dig up and properly dispose of contaminated soil.
5. If the spill occurs during rain, cover spill with tarps or other materials to prevent contaminating runoff.

TEMPORARY STORMWATER SECTION

ATTACHMENT A (CONT'D)

SPILL RESPONSE ACTIONS

Significant/Hazardous Spills

1. Notify the TCEQ by telephone as soon as possible and within 24 hours at 512-339-2929 (Austin) or 210-490-3096 (San Antonio) between 8 AM and 5 PM. After hours, contact the Environmental Release Hotline at 1-800-832-8224. It is the contractor's responsibility to have all emergency phone numbers at the construction site.
2. For spills of federal reportable quantities, in conformance with the requirements in 40CFR parts 110, 119 and 302, the contractor should notify the National Response Center at (800) 424-8802.
3. Notification should first be made by telephone and followed up with a written report.
4. The services of a spill contractor or a Haz-Mat team should be obtained immediately. Construction personnel should not attempt to clean up until the appropriate and qualified staffs have arrived at the job site.
5. Other agencies which may need to be contacted include, but are not limited to, the City Police Department, County Sheriff Office, Fire Departments, etc.

Vehicle and Equipment Maintenance

- If maintenance must occur onsite, use a designated area and a secondary containment, located away from drainage courses, to prevent the run-on of stormwater and the runoff of spills.
- Regularly inspect onsite vehicles and equipment for leaks and repair immediately.
- Check incoming vehicles and equipment (including delivery trucks, and employee and subcontractor vehicles) for leaking oil and fluids. Do not allow leaking vehicles onsite.
- Always use secondary containment, such as drain pan or drop cloth, to catch spills or leaks when removing or changing fluids.
- Place drip pans or absorbent materials under paving equipment when not in use.
- Use absorbent materials on small spills rather than hosing down or burying the spill. Remove the absorbent materials promptly and dispose of properly.
- Promptly transfer used fluids to the proper waste or recycling drums. Do not leave full drip pans or other open containers lying around.
- Oil filters disposed of in trashcans or dumpsters can leak oil and pollute stormwater. Place the oil filter in a funnel over a waste oil recycled. As the oil supplier or recycler about recycling oil filters.
- Store cracked batteries in a non-leaking secondary container. Do this with all cracked batteries even if you think all the acid has drained out. If you drop a battery, treat if as if it cracked. Put into the containment area until you are sure it is not leaking.

Vehicle and Equipment Fueling

1. If fueling must occur on site, used designated areas, located away from drainage courses, to prevent the run-on of stormwater and the runoff of spills.
2. Discourage "topping off" on fuel tanks.
3. Always use secondary containment, such as drain pan, when fueling to catch spill/leaks.

TEMPORARY STORMWATER SECTION

ATTACHMENT B

POTENTIAL SOURCES OF CONTAMINATION

Asphalt products used on this project

- Preventative measures

    - After placement of asphalt, emulsion or coatings, the contractor will be responsible for immediate cleanup should an unexpected rain occur. For the duration of the asphalt product curing time, the contractor will maintain standby personnel and equipment to contain any asphalt wash-off should an unexpected rain occur. The contractor will be instructed not to place asphalt products on the ground within 48 hours of a forecasted rain.

Oil, grease fuel and hydrocarbon fluid contamination from construction equipment and vehicle drippings.

- Preventative measures

    - Vehicle maintenance when possible will be performed within the construction staging area.
    - Construction vehicles and equipment shall be checked regularly for leaks and repaired immediately.

Accidental leaks or spills of oil, petroleum products and substances listed under 40 CFR parts 110, 117, and 302 used or stored temporarily on site.

- Preventative measures

    - Contractor to incorporate regular safety meetings, a discussion of spill prevention and appropriate disposal procedures.
    - Contractor's superintendent or representative overseer shall enforce proper spill prevention and control measures.
    - Hazardous material and wastes shall be stored in covered containers and protected from vandalism.
    - A stockpile of spill cleanup materials shall be stored on site where it will be readily available.

Miscellaneous trash and litter from construction workers and material wrappings.

• Preventative measures

o Trash containers will be placed throughout the site to encourage proper trash disposal.

TEMPORARY STORMWATER SECTION

ATTACHMENT B (CONT'D)

POTENTIAL SOURCES OF CONTAMINATION

Construction Debris

- Preventative measures
    - Construction debris will be monitored daily by contractor. Debris will be collected weekly and placed in disposal bins. Situations requiring immediate attention will be addressed on a case by case basis.

Spills/ Overflow of waste from portable toilets

- Preventative measures
    - Portable toilets will be placed away from high traffic vehicular areas and storm drain inlets.
    - Portable toilets will be placed on a level ground surface.
    - Portable toilets will be inspected regularly for leaks and will be serviced and sanitized at time intervals that will maintain sanitary conditions.

TEMPORARY STORMWATER SECTION

ATTACHMENT C

SEQUENCE OF MAJOR ACTIVITIES

1. Temporary erosion and sedimentation controls shall be installed. These measures shall include stabilized construction entrance/exit, concrete washout, silt fence, tree protection fencing and inlet sediment traps and shall be inspected and maintained throughout the project.
2. Demolition, tree removal and site grubbing and prepping which will disturb 1.603 acres.
3. Rough grade of site, disturbing approximately 1.603 acres.
4. Installation of storm sewer and water quality units, wastewater, and water lines, disturbing approximately 0.18 acres.
5. Installation of sediment traps in newly installed storm sewer inlets.
6. Installation of building pads and pavement, disturbing approximately 0.802 acres.
7. Installation of landscaping and revegetation of site, disturbing approximately 0.167 acres.

TEMPORARY STORMWATER SECTION

ATTACHMENT D

TEMPORARY BEST MANAGEMENT PRACTICES AND MEASURES

7a. A description of how BMPs and measures will prevent pollution of surface water, groundwater or stormwater that originates upgradient from the site and flows across the site.

1. No upgradient or offsite runoff will be routed through this site.

7b. A description of how BMPs and measures will prevent pollution of surface water or groundwater that originates on-site or flows off-site, including pollution caused by contaminated stormwater runoff from the site.

Site preparations will disturb the largest amount of soil. Therefore, before any of this work can begin, the clearing and grading contractor will be responsible for the installation of all on-site control measures. The methodology for pollution prevention of on-site stormwater will include:

1. Erection of silt fence along downgradient boundary of construction activities for temporary erosion and sedimentation controls.
2. Installation of inlet sediment traps in existing inlets along the limits of the project site to reduce the dispersion of sediment from the site.
3. Installation of stabilized construction entrance/exits to reduce the dispersion of sediment from the site.
4. Installation of concrete truck washout.
5. Installation of construction staging areas.

Prior to the initiation of construction, all previously installed control measures will be repaired or reestablished for their designed purpose. The construction contractor will be responsible for the installation of the remaining on-site control measures that includes installation of the concrete truck washouts.

During construction, additional inlet sediment traps shall be installed with the new storm sewer inlets and manholes.

7c. A description of how BMPs and measures will prevent pollutants from entering surface streams, sensitive features, or the aquifer.

Temporary measures are intended to provide a method of slowing the flow of runoff from the construction site in order to allow sediment and suspended solids to settle out of the runoff. By containing the sediment and suspended solids within the site, they will not enter the aquifer, surface streams and/or sensitive features that may exist downstream of the site.

7d. A description of how, to the maximum extent practicable, BMPs and measures will maintain flow to naturally occurring sensitive features identified in either the geologic assessment, TCEQ inspections, or during excavation, blasting, or construction

BMP measures utilized in this plan are intended to allow stormwater to continue downstream after passing through the BMPs. This will allow stormwater runoff to continue downgradient to streams or features that may exist downstream of the site. Features discovered during construction will be reported and assessed in accordance with applicable regulations.

TEMPORARY STORMWATER SECTION

ATTACHMENT F

STRUCTURAL PRACTICES

The structural practices listed below are shown on the plans and are listed on Attachment D of this CZP application.

1. Silt fencing will be installed adjacent to any drainage way which receives sheet flow from upgradient-disturbed areas and along the sideslope perimeter of disturbed areas.

2. Inlet sediment traps will be used at storm drainage inlets prior to stabilization of the drainage areas.

TEMPORARY STORMWATER SECTION

ATTACHMENT G

DRAINAGE AREA MAP

Please refer to the sheets in the 8120ADAYA.005-Lavish Salon and Boutique plan set.

- PRE-DEVELOPMENT DRAINAGE AREA MAP
- POST-DEVELOPMENT DRAINAGE AREA MAP

TEMPORARY STORMWATER SECTION

ATTACHMENT I

INSPECTION AND MAINTENANCE FOR BMPS

The following list of items outlines and dictates Inspection and Maintenance for BMPs practices. Inspection and maintenance guidelines come from TCEQ RG-348.

In addition to these measures the contractor will be subject to the provisions of the TCEQ General Permit Number TXR 150000 relating to discharges from construction activities.

Silt Fence

1. Inspect all fencing weekly, and after any rainfall.
2. Remove sediment when buildup reaches 6 inches.
3. Replace any torn fabric or install a second line of fencing parallel to the torn section.
4. Replace or repair any sections crushed or collapsed in the course of construction activity. If a section of fence is obstructing vehicular access, consider relocating it to a spot to where it will provide equal protection, but will not obstruct vehicles. A triangular filter dike may be preferable to a silt fence at common vehicle access points.
5. When construction is complete, the sediment should be disposed of in a manner that will not cause additional siltation and the prior location of the silt fence should be revegetated. The fence itself should be disposed of in an approved landfill.

Inlet Sediment Trap

1. Inspection should be made weekly and after each rainfall. Repair or replacement should be made promptly as needed by the contractor.
2. Remove sediment when buildup reaches a depth of 3 inches. Removed sediment should be deposited in a suitable area and in such a manner that it will not erode.
3. Check placement of devices to prevent gaps between device and inlet walls.
4. Inspect filter fabric and patch or replace if torn or missing.
5. Sediment traps should be removed only after the remaining drainage area has been properly stabilized.

TEMPORARY STORMWATER SECTION

ATTACHMENT J

SCHEDULE OF INTERIM AND PERMANENT SOIL STABILIZATION PRACTICES

Onsite construction activities shall be conducted in accordance with the SWPPP for the project which included the provisions of the TPDES General Permit Discharge Waste N. TXR150000.

Interim on-site stabilization measures will include minimizing soil disturbances by exposing the smallest practical area of land required for the shortest period of time and maximizing the use of natural vegetation. All disturbed soil will be stabilized as per project specifications in accordance with pages 1-35 to 1-60 of TCEQ Technical Guidance Manual RG-348 (2005).

Stabilization measures shall be initiated as soon as practicable in portions of the site where construction activities have temporarily or permanently ceased, but in no case more than 14 days after the construction activity in that portion of the site has temporarily or permanently ceased. Where the initiation of stabilization measures by the 14th day after construction activity temporary or permanently cease is precluded by weather conditions, stabilization measures shall be initiated as soon as practicable. Where construction activity on a portion of the site is temporarily ceased, and earth disturbing activities will be resumed within 21 days, temporary stabilization measures do not have to be initiated on that portion of the site. In areas experiencing droughts where the initiation of stabilization measures by the 14th day after construction activity has temporarily or permanently ceased is preclude by seasonal arid conditions, stabilization measures shall be initiated as soon as practicable.

Interim Stabilization Measures will include one or more of the following methods.

1. Temporary Vegetation
2. Installation of blankets or matting material
3. Hydraulic Mulch
4. Sod

The interim and permanent stabilization will be installed in accordance with the standard specifications for the county or city having jurisdiction over the project, whichever is more stringent. In the event that the governing entity does not have specifications for these items, the work shall be completed in compliance with the procedures and specifications outlined in the current Technical Guidance Manual published by the TCEQ.

Permanent Stabilization measures will include on or more of the following methods.

1. Permanent Vegetation including landscape planting with trees, shrubs or ground cover.
2. Installation of blankets or matting material
3. Hydromulch
4. Grass Sodding
5. Rock or concrete rip-rap

TCEQ Office Use Only
Permit No:
CN:
RN:

Notice of Intent (NOI) for an Authorization for Stormwater Discharges Associated with Construction Activity under TPDES General Permit TXR150000

IMPORTANT INFORMATION

Please read and use the General Information and Instructions prior to filling out each question in the NOI form.

Use the NOI Checklist to ensure all required information is completed correctly. **Incomplete applications delay approval or result in automatic denial.**

Once processed your permit authorization can be viewed by entering the following link into your internet browser: http://www2.tceq.texas.gov/wq_dpa/index.cfm or you can contact TCEQ Stormwater Processing Center at 512-239-3700.

ePERMITS

Effective September 1, 2018, this paper form must be submitted to TCEQ with a completed electronic reporting waiver form (TCEQ-20754).

To submit an NOI electronically, enter the following web address into your internet browser and follow the instructions: https://www3.tceq.texas.gov/steers/index.cfm

APPLICATION FEE AND PAYMENT

The application fee for submitting a paper NOI is $325. The application fee for electronic submittal of a NOI through the TCEQ ePermits system (STEERS) is $225.

Payment of the application fee can be submitted by mail or through the TCEQ ePay system. The payment and the NOI must be mailed to separate addresses. To access the TCEQ ePay system enter the following web address into your internet browser: http://www.tceq.texas.gov/epay.

Provide your payment information for verification of payment:

- If payment was mailed to TCEQ, provide the following:
  - Check/Money Order Number: Click here to enter text
  - Name printed on Check: Click here to enter text
- If payment was made via ePay, provide the following:
  - Voucher Number: Click here to enter text
  - A copy of the payment voucher is attached to this paper NOI form.

RENEWAL (This portion of the NOI is not applicable after June 3, 2018)

Is this NOI for a renewal of an existing authorization? ☐ Yes ☒ No

If Yes, provide the authorization number here: TXR15 Click here to enter text

NOTE: If an authorization number is not provided, a new number will be assigned.

SECTION 1. OPERATOR (APPLICANT)

a) If the applicant is currently a customer with TCEQ, what is the Customer Number (CN) issued to this entity? CN Click here to enter text

(Refer to Section 1.a) of the Instructions)

b) What is the Legal Name of the entity (applicant) applying for this permit? (The legal name must be spelled exactly as filed with the Texas Secretary of State, County, or in the legal document forming the entity.)

S5 Properties, LLC.

c) What is the contact information for the Operator (Responsible Authority)?

Prefix (Mr. Ms. Miss): Ms.

First and Last Name: Wendy Schneider Suffix: Click here to enter text

Title: Owner Credentials: Click here to enter text

Phone Number: 512.810.0359 Fax Number: N/A

E-mail: wendy@stbfirm.com

Mailing Address: 1106 Lynsenko Dr.

City, State, and Zip Code: Cedar Park, TX 78613

Mailing Information if outside USA:

Territory: Click here to enter text

Country Code: Click here to enter text Postal Code: Click here to enter text

d) Indicate the type of customer:

☐ Individual
☐ Limited Partnership
☐ General Partnership
☐ Trust
☐ Sole Proprietorship (D.B.A.)
☒ Corporation
☐ Estate
☐ Federal Government
☐ County Government
☐ State Government
☐ City Government
☐ Other Government
☐ Other: Click here to enter text.

e) Is the applicant an independent operator? ☒ Yes ☐ No

(If a governmental entity, a subsidiary, or part of a larger corporation, check No.)

f) Number of Employees. Select the range applicable to your company.

☒ 0-20 ☐ 251-500

☐ 21-100 ☐ 501 or higher

☐ 101-250

g) Customer Business Tax and Filing Numbers: (**Required** for Corporations and Limited Partnerships. **Not Required** for Individuals, Government, or Sole Proprietors.)

State Franchise Tax ID Number: Click here to enter text.

Federal Tax ID: Click here to enter text.

Texas Secretary of State Charter (filing) Number: Click here to enter text.

DUNS Number (if known): Click here to enter text.

SECTION 2. APPLICATION CONTACT

Is the application contact the same as the applicant identified above?

☐ Yes, go to Section 3

☒ No, complete this section

Prefix (Mr. Ms. Miss): Ms.

First and Last Name: Jennifer Henderson Suffix: Click here to enter text.

Title: Project Manager Credential: P.E. 116883

Organization Name: M&S Engineering

Phone Number: 512.350.6228 Fax Number: N/A

E-mail: jhenderson@msengr.com

Mailing Address: 102 W Morrow ste 101

Internal Routing (Mail Code, Etc.): Click here to enter text.

City, State, and Zip Code: Georgetown, TX 78626

Mailing information if outside USA:

Territory: Click here to enter text.

Country Code: Click here to enter text. Postal Code: Click here to enter text.

SECTION 3. REGULATED ENTITY (RE) INFORMATION ON PROJECT OR SITE

a) If this is an existing permitted site, what is the Regulated Entity Number (RN) issued to this site? RN Click here to enter text.

(Refer to Section 3.a) of the Instructions)

b) Name of project or site (the name known by the community where it's located): Lavish Salon and Boutique

c) In your own words, briefly describe the type of construction occurring at the regulated site (residential, industrial, commercial, or other): One general office building for hair salon/personal services.

d) County or Counties (if located in more than one): Williamson

e) Latitude: 30.529334 Longitude: -97.791446

f) Site Address/Location

If the site has a physical address such as 12100 Park 35 Circle, Austin, TX 78753, complete *Section A*.

If the site does not have a physical address, provide a location description in *Section B*. Example: located on the north side of FM 123, 2 miles west of the intersection of FM 123 and Highway 1.

Section A:

Street Number and Name: 901 N. Vista Ridge Blvd.

City, State, and Zip Code: Cedar Park, TX 78613

Section B:

Location Description: Click here to enter text.

City (or city nearest to) where the site is located: Click here to enter text.

Zip Code where the site is located: Click here to enter text.

SECTION 4. GENERAL CHARACTERISTICS

a) Is the project or site located on Indian Country Lands?

☐ Yes, do not submit this form. You must obtain authorization through EPA Region 6.

☒ No

b) Is your construction activity associated with a facility that, when completed, would be associated with the exploration, development, or production of oil or gas or geothermal resources?

☐ Yes. Note: The construction stormwater runoff may be under jurisdiction of the Railroad Commission of Texas and may need to obtain authorization through EPA Region 6.

☒ No

c) What is the Primary Standard Industrial Classification (SIC) Code that best describes the construction activity being conducted at the site? **7200**

d) What is the Secondary SIC Code(s), if applicable? Click here to enter text.

e) What is the total number of acres to be disturbed? 1.603

f) Is the project part of a larger common plan of development or sale?

☒ Yes

☐ No. The total number of acres disturbed, provided in e) above, must be 5 or more. If the total number of acres disturbed is less than 5, do not submit this form. See the requirements in the general permit for small construction sites.

g) What is the estimated start date of the project? November 2020

h) What is the estimated end date of the project? March 2021

i) Will concrete truck washout be performed at the site? ☒ Yes ☐ No

j) What is the name of the first water body(ies) to receive the stormwater runoff or potential runoff from the site? Brushy Creek

k) What is the segment number(s) of the classified water body(ies) that the discharge will eventually reach? 1244A

l) Is the discharge into a Municipal Separate Storm Sewer System (MS4)?

☒ Yes ☐ No

If Yes, provide the name of the MS4 operator: Cedar Park, TX

Note: The general permit requires you to send a copy of this NOI form to the MS4 operator.

m) Is the discharge or potential discharge from the site within the Recharge Zone, Contributing Zone, or Contributing Zone within the Transition Zone of the Edwards Aquifer, as defined in 30 TAC Chapter 213?

☒ Yes, complete the certification below.

☐ No, go to Section 5

I certify that the copy of the TCEQ-approved Plan required by the Edwards Aquifer Rule (30 TAC Chapter 213) that is included or referenced in the Stormwater Pollution Prevention Plan will be implemented. ☒ Yes

SECTION 5. NOI CERTIFICATION

a) I certify that I have obtained a copy and understand the terms and conditions of the Construction General Permit (TXR150000). ☒ Yes

b) I certify that the full legal name of the entity applying for this permit has been provided and is legally authorized to do business in Texas. ☒ Yes

c) I understand that a Notice of Termination (NOT) must be submitted when this authorization is no longer needed. ☒ Yes

d) I certify that a Stormwater Pollution Prevention Plan has been developed, will be implemented prior to construction and to the best of my knowledge and belief is compliant with any applicable local sediment and erosion control plans, as required in the Construction General Permit (TXR150000). ☒ Yes

Note: For multiple operators who prepare a shared SWP3, the confirmation of an operator may be limited to its obligations under the SWP3, provided all obligations are confirmed by at least one operator.

SECTION 6. APPLICANT CERTIFICATION SIGNATURE

Operator Signatory Name: JENNIFER HENDERSON, P.E.

Operator Signatory Title: PROJECT ENGINEER.

I certify under penalty of law that this document and all attachments were prepared under my direction or supervision in accordance with a system designed to assure that qualified personnel properly gather and evaluate the information submitted. Based on my inquiry of the person or persons who manage the system, or those persons directly responsible for gathering the information, the information submitted is, to the best of my knowledge and belief, true, accurate, and complete. I am aware there are significant penalties for submitting false information, including the possibility of fine and imprisonment for knowing violations.

I further certify that I am authorized under 30 Texas Administrative Code §305.44 to sign and submit this document, and can provide documentation in proof of such authorization upon request.

Signature (use blue ink): _____ Date: 10/6/2020

NOTICE OF INTENT CHECKLIST (TXR150000)

Did you complete everything? Use this checklist to be sure!

Are you ready to mail your form to TCEQ? Go to the General Information Section of the Instructions for mailing addresses.

Confirm each item (or applicable item) in this form is complete. This checklist is for use by the applicant to ensure a complete application is being submitted. **Missing information may result in denial of coverage under the general permit.** (See NOI process description in the General Information and Instructions.)

APPLICATION FEE

If paying by check:

☐ Check was mailed **separately** to the TCEQs Cashier's Office. (See Instructions for Cashier's address and Application address.)

☐ Check number and name on check is provided in this application.

If using ePay:

☐ The voucher number is provided in this application and a copy of the voucher is attached.

RENEWAL

☐ If this application is for renewal of an existing authorization, the authorization number is provided.

OPERATOR INFORMATION

☐ Customer Number (CN) issued by TCEQ Central Registry

☐ Legal name as filed to do business in Texas. (Call TX SOS 512-463-5555 to verify.)

☐ Name and title of responsible authority signing the application.

☐ Phone number and e-mail address

☐ Mailing address is complete & verifiable with USPS. www.usps.com

☐ Type of operator (entity type). Is applicant an independent operator?

☐ Number of employees.

☐ For corporations or limited partnerships – Tax ID and SOS filing numbers.

☐ Application contact and address is complete & verifiable with USPS. http://www.usps.com

REGULATED ENTITY (RE) INFORMATION ON PROJECT OR SITE

☐ Regulated Entity Number (RN) (if site is already regulated by TCEQ)

☐ Site/project name and construction activity description

☐ County

☐ Latitude and longitude http://www.tceq.texas.gov/gis/sqmaview.html

☐ Site Address/Location. Do not use a rural route or post office box.

GENERAL CHARACTERISTICS

☐ Indian Country Lands –the facility is not on Indian Country Lands.

☐ Construction activity related to facility associated to oil, gas, or geothermal resources

☐ Primary SIC Code that best describes the construction activity being conducted at the site. www.osha.gov/oshstats/sicser.html

☐ Estimated starting and ending dates of the project.

☐ Confirmation of concrete truck washout.

☐ Acres disturbed is provided and qualifies for coverage through a NOI.

☐ Common plan of development or sale.

☐ Receiving water body or water bodies.

☐ Segment number or numbers.

☐ MS4 operator.

☐ Edwards Aquifer rule.

CERTIFICATION

☐ Certification statements have been checked indicating Yes.

☐ Signature meets 30 Texas Administrative Code (TAC) §305.44 and is original.

Agent Authorization Form
For Required Signature
Edwards Aquifer Protection Program
Relating to 30 TAC Chapter 213
Effective June 1, 1999

I Wendy Schneider,
Print Name

Owner,
Title - Owner/President/Other

of S5 Properties, LLC.,
Corporation/Partnership/Entity Name

have authorized Jennifer Henderson
Print Name of Agent/Engineer

of M&S Engineering
Print Name of Firm

to represent and act on the behalf of the above-named Corporation, Partnership, or Entity for the purpose of preparing and submitting this plan application to the Texas Commission on Environmental Quality (TCEQ) for the review and approval consideration of regulated activities.

I also understand that:

1. The applicant is responsible for compliance with 30 Texas Administrative Code Chapter 213 and any condition of the TCEQ's approval letter. The TCEQ is authorized to assess administrative penalties of up to $10,000 per day per violation.

2. For those submitting an application who are not the property owner, but who have the right to control and possess the property, additional authorization is required from the owner.

3. Application fees are due and payable at the time the application is submitted. The application fee must be sent to the TCEQ cashier or to the appropriate regional office. The application will not be considered until the correct fee is received by the commission.

4. A notarized copy of the Agent Authorization Form must be provided for the person preparing the application, and this form must accompany the completed application.

5. No person shall commence any regulated activity on the Edwards Aquifer Recharge Zone, Contributing Zone or Transition Zone until the appropriate application for the activity has been filed with and approved by the Executive Director.

SIGNATURE PAGE:

Wendy Schneider
Applicant's Signature

9/30/2020
Date

THE STATE OF Texas §

County of Burnet §

BEFORE ME, the undersigned authority, on this day personally appeared Wendy Schneider known to me to be the person whose name is subscribed to the foregoing instrument, and acknowledged to me that (s)he executed same for the purpose and consideration therein expressed.

GIVEN under my hand and seal of office on this 30th day of September, 2020.

ANGELA YVONNE CLARK
Notary Public, State of Texas
Comm. Expires 04-21-2022
Notary ID 128214822

Angela Yvonne Clark
NOTARY PUBLIC

ANGELA YVONNE CLARK
Typed or Printed Name of Notary

MY COMMISSION EXPIRES: April 21, 2022

Application Fee Form

Texas Commission on Environmental Quality
Name of Proposed Regulated Entity: Lavish Salon and Boutiqeu
Regulated Entity Location: 901 N. Vista Ridge Blvd., Cedar Park, TX 78613
Name of Customer: Wendy Schneider
Contact Person: Jennifer Henderson, P.E. Phone: 512.350.6228
Customer Reference Number (if issued):CN _____
Regulated Entity Reference Number (if issued):RN _____

Austin Regional Office (3373)

☐ Hays ☐ Travis ☒ Williamson

San Antonio Regional Office (3362)

☐ Bexar ☐ Medina ☐ Uvalde
☐ Comal ☐ Kinney

Application fees must be paid by check, certified check, or money order, payable to the **Texas Commission on Environmental Quality**. Your canceled check will serve as your receipt. **This form must be submitted with your fee payment**. This payment is being submitted to:

☐ Austin Regional Office
☒ Mailed to: TCEQ - Cashier
Revenues Section
Mail Code 214
P.O. Box 13088
Austin, TX 78711-3088

☐ San Antonio Regional Office
☐ Overnight Delivery to: TCEQ - Cashier
12100 Park 35 Circle
Building A, 3rd Floor
Austin, TX 78753
(512)239-0357

Site Location (Check All That Apply):

☐ Recharge Zone ☒ Contributing Zone ☐ Transition Zone

Type of Plan	*Size*	*Fee Due*
Water Pollution Abatement Plan, Contributing Zone Plan: One Single Family Residential Dwelling	Acres	$
Water Pollution Abatement Plan, Contributing Zone Plan: Multiple Single Family Residential and Parks	Acres	$
Water Pollution Abatement Plan, Contributing Zone Plan: Non-residential	1.24 Acres	$ 4000.00
Sewage Collection System	L.F.	$
Lift Stations without sewer lines	Acres	$
Underground or Aboveground Storage Tank Facility	Tanks	$
Piping System(s)(only)	Each	$
Exception	Each	$
Extension of Time	Each	$

Signature: Wendy Schneider Date: 9/30/2020

TCEQ-0574 (Rev. 02-24-15)

Application Fee Schedule

Texas Commission on Environmental Quality

Edwards Aquifer Protection Program 30 TAC Chapter 213 (effective 05/01/2008)

Water Pollution Abatement Plans and Modifications

Contributing Zone Plans and Modifications

Project	*Project Area in Acres*	*Fee*
One Single Family Residential Dwelling	< 5	$650
Multiple Single Family Residential and Parks	< 5 5 < 10 10 < 40 40 < 100 100 < 500 ≥ 500	$1,500 $3,000 $4,000 $6,500 $8,000 $10,000
Non-residential (Commercial, industrial, institutional, multi-family residential, schools, and other sites where regulated activities will occur)	< 1 1 < 5 5 < 10 10 < 40 40 < 100 ≥ 100	$3,000 $4,000 $5,000 $6,500 $8,000 $10,000

Organized Sewage Collection Systems and Modifications

Project	*Cost per Linear Foot*	*Minimum Fee-Maximum Fee*
Sewage Collection Systems	$0.50	$650 - $6,500

Underground and Aboveground Storage Tank System Facility Plans and Modifications

Project	*Cost per Tank or Piping System*	*Minimum Fee-Maximum Fee*
Underground and Aboveground Storage Tank Facility	$650	$650 - $6,500

Exception Requests

Project	*Fee*
Exception Request	$500

Extension of Time Requests

Project	*Fee*
Extension of Time Request	$150

TCEQ Use Only

TCEQ Core Data Form

For detailed instructions regarding completion of this form, please read the Core Data Form Instructions or call 512-239-5175.

SECTION I: General Information

1. Reason for Submission (*If other is checked please describe in space provided.*)

☒ New Permit, Registration or Authorization (*Core Data Form should be submitted with the program application.*)

☐ Renewal (*Core Data Form should be submitted with the renewal form*) ☐ Other

2. Customer Reference Number *(if issued)*	Follow this link to search for CN or RN numbers in Central Registry**	3. Regulated Entity Reference Number *(if issued)*
CN		RN

SECTION II: Customer Information

4. General Customer Information | **5. Effective Date for Customer Information Updates** (mm/dd/yyyy)

☒ New Customer ☐ Update to Customer Information ☐ Change in Regulated Entity Ownership
☐ Change in Legal Name (Verifiable with the Texas Secretary of State or Texas Comptroller of Public Accounts)

The Customer Name submitted here may be updated automatically based on what is current and active with the Texas Secretary of State (SOS) or Texas Comptroller of Public Accounts (CPA).

6. Customer Legal Name (*If an individual, print last name first: eg: Doe, John*)	*If new Customer, enter previous Customer below:*
S5 Properties, LLC.	N/A

7. TX SOS/CPA Filing Number	8. TX State Tax ID (11 digits)	9. Federal Tax ID (9 digits)	10. DUNS Number (*if applicable*)
0803476555	32072610010		

11. Type of Customer: ☒ Corporation ☐ Individual Partnership: ☐ General ☐ Limited
Government: ☐ City ☐ County ☐ Federal ☐ State ☐ Other ☐ Sole Proprietorship ☐ Other:

12. Number of Employees
☒ 0-20 ☐ 21-100 ☐ 101-250 ☐ 251-500 ☐ 501 and higher

13. Independently Owned and Operated?
☒ **Yes** ☐ **No**

14. Customer Role (Proposed or Actual) – *as it relates to the Regulated Entity listed on this form. Please check one of the following*

☐ Owner ☐ Operator ☒ Owner & Operator
☐ Occupational Licensee ☐ Responsible Party ☐ Voluntary Cleanup Applicant ☐ Other:

15. Mailing Address:							
	1106 Lynsenko Dr.						
	City	Cedar Park	State	TX	ZIP	78613	ZIP + 4	1634

16. Country Mailing Information (*if outside USA*)	17. E-Mail Address (*if applicable*)
	wendy@stbfirm.com

18. Telephone Number	19. Extension or Code	20. Fax Number (*if applicable*)
(512) 810-0359		( ) -

SECTION III: Regulated Entity Information

21. General Regulated Entity Information (*If 'New Regulated Entity" is selected below this form should be accompanied by a permit application*)

☒ New Regulated Entity ☐ Update to Regulated Entity Name ☐ Update to Regulated Entity Information

The Regulated Entity Name submitted may be updated in order to meet TCEQ Agency Data Standards (removal of organizational endings such as Inc, LP, or LLC).

22. Regulated Entity Name (*Enter name of the site where the regulated action is taking place.*)

Lavish Salon and Boutique

23. Street Address of the Regulated Entity: *(No PO Boxes)*	901 N. Vista Ridge Blvd.						
	City	Cedar Park	State	TX	ZIP	78613	ZIP + 4
24. County	Williamson						

Enter Physical Location Description if no street address is provided.

25. Description to Physical Location:			
26. Nearest City		State	Nearest ZIP Code

27. Latitude (N) In Decimal:			28. Longitude (W) In Decimal:		
Degrees	Minutes	Seconds	Degrees	Minutes	Seconds

29. Primary SIC Code (4 digits)	30. Secondary SIC Code (4 digits)	31. Primary NAICS Code (5 or 6 digits)	32. Secondary NAICS Code (5 or 6 digits)

33. What is the Primary Business of this entity? *(Do not repeat the SIC or NAICS description.)*

General Business/Hair Salon

34. Mailing Address:	1106 Lynsenko Dr.						
	City	Cedar Park	State	TX	ZIP	78613	ZIP + 4
35. E-Mail Address:	wendy@stbfirm.com						

36. Telephone Number	37. Extension or Code	38. Fax Number *(if applicable)*
(512) 810-359		( ) -

39. TCEQ Programs and ID Numbers Check all Programs and write in the permits/registration numbers that will be affected by the updates submitted on this form. See the Core Data Form instructions for additional guidance.

☐ Dam Safety	☐ Districts	☒ Edwards Aquifer	☐ Emissions Inventory Air	☐ Industrial Hazardous Waste
☐ Municipal Solid Waste	☐ New Source Review Air	☐ OSSF	☐ Petroleum Storage Tank	☐ PWS
☐ Sludge	☐ Storm Water	☐ Title V Air	☐ Tires	☐ Used Oil
☐ Voluntary Cleanup	☐ Waste Water	☐ Wastewater Agriculture	☐ Water Rights	☐ Other:

SECTION IV: Preparer Information

40. Name:	Jennifer Henderson, P.E.	41. Title:	Project Manager

42. Telephone Number	43. Ext./Code	44. Fax Number	45. E-Mail Address
(512) 350-6228		( ) -	jhenderson@msengr.com

SECTION V: Authorized Signature

46. By my signature below, I certify, to the best of my knowledge, that the information provided in this form is true and complete, and that I have signature authority to submit this form on behalf of the entity specified in Section II, Field 6 and/or as required for the updates to the ID numbers identified in field 39.

Company:	M&S Engineering	Job Title:	Land Development Division Manager
Name *(In Print)*:	Jennifer Henderson, P.E.	Phone:	(512) 350- 6228
Signature:		Date:	10/01/2020