Roush Enterprises E-350 LPI System

Task #3 Deliverable Report

for:

New Technology Research and Development Program

582-11-11142-3264

Submitted by:

Roush Enterprises

Principal Investigators:
Ralph Hoy

February 22, 2011

The preparation of this report is based on work funded in part

by the State of Texas

through a Grant from the Texas Commission on Environmental Quality

Table of Contents

ABSTRACT/EXECUTIVE SUMMARY **1**

INTRODUCTION / BACKGROUND **2**

PROJECT OBJECTIVES / TECHNICAL APPROACH **3**

TASKS **3**

CONFIRMATION PROTOTYPE FINAL CAD MODELS 4
FUNCTIONAL EQUIVALENCY EVALUATION OF ADVANCED PROTOTYPE VS. CONFIRMATION PROTOTYPE 11

DISCUSSION/OBSERVATIONS **12**

OBJECTIVES VS. RESULTS 12
CRITICAL ISSUES 12
TECHNICAL AND COMMERCIAL VIABILITY OF THE PROPOSED APPROACH 12
SCOPE FOR FUTURE WORK 12

INTELLECTUAL PROPERTIES/PUBLICATIONS/PRESENTATIONS **12**

SUMMARY/CONCLUSIONS **12**

ACKNOWLEDGEMENTS **13**

APPENDICES **14**

APPENDIX A: SUPPORTING DOCUMENTATION 15

Table of Figures

Figure 1: Engine fuel circuit FRPCM 4

Figure 2: Engine fuel flow circuit 5

Figure 3: Chassis fuel line 5

Figure 4: Twin aft axle tanks 6

Figure 5: Fuel tank mounting brackets 6

Figure 6: Fuel tank 7

Figure 7: Fuel tank updates 7

Figure 8: Supply valve 8

Figure 9: Quick cover and grommet 8

Figure 10: Fuel supply system 9

Figure 11: Fuel supply system – inside tank overall 9

Figure 12: Fuel supply system – inside tank 10

Abstract/Executive Summary

Roush's project goals are to design prototype Liquid Propane Injection (LPI) system hardware and develop calibration of the powertrain control module for the Ford E-350 Cutaway vehicle configuration, build prototype components and E-350 prototype vehicles for hardware design validation, and develop the calibration that runs the powertrain control module and contributes to overall emissions reductions. This program stage will result in the confirmation through emissions testing in an EPA-approved test lab that nitrogen oxide (NO_x) and other emission levels have been improved from the base E-350 gasoline versions. Anticipated emissions reductions over a comparable 2010 gasoline vehicle are 50% for NO_x, 25% for particulate matter (PM), 25% for greenhouse gases (GHG), and 15% for nonmethane hydrocarbons (NMHC). The key benefits of this technology will be reductions of 2.9 tons of NO_x, 0.62 tons of NMHC, 0.07 tons of PM, and over 4,500 tons of GHGs annually by 2012 for fleets operating in Texas' nonattainment areas, as well as support for technology using a Texas-produced alternative fuel.

Introduction / Background

In today's business environment, fleets are challenged with demands for alternative fuel technologies that reduce carbon-based fuel emissions, including NO_x, while also reducing operating costs and dependence on foreign oil. Frito Lay, out of Plano, Texas, as an example, has a need for converting much of their on-road heavy-duty delivery truck fleet to alternative fuel vehicles that reduce emissions.

Propane systems for vehicles, both past and current, have relied on outdated technology (vapor and bi-fuel) which degrade engine performance and compromise quality. Liquid propane injection (LPI) systems, both past and current, have achieved better performance, but technological advancements have been required to effectively manage the flow and pressure of liquid propane, improve upon related emissions attributes and provide a sustainable platform for fleet growth with future LPI vehicles.

Roush has been a leader in improving LPI technology for vehicles, integrating longstanding expertise in OEM level engineering and powertrain calibration with in-house emissions development, testing and certification capabilities. Propane, as an alternative engine fuel, supports the initiative to reduce emissions such as NO_x as well as dependence on foreign oil, while providing a cost benefit over gasoline to fleets. Roush has released for sale a number of Ford-based fleet vehicle LPI applications, including the 2007 ½ - 2008 F-150, 2009 and 2010 F-250, and 2009 – 2011 E-Series Vans.

The advanced technology being developed under this grant project is intended to enable Frito Lay (Plano, Texas) and other large fleets to reduce NO_x and other emissions from their delivery vehicle fleets by enabling the testing and development of a prototype LPI system for the Ford E-350 chassis-cab with 5.4L 2V engine, including hardware and calibration, for in-vehicle testing, development and emissions reduction confirmation. This LPI system would then be certified by EPA for sale to Frito Lay and other large fleets in Texas and around the United States. The E-350 cutaway makes-up a large portion of the delivery vehicle fleets in Texas and the US overall. With the funding provided by the proposed grant, this product will be commercially available as early as the fourth quarter of this year.

This program stage will result in the confirmation through emissions testing in Ford's EPA-approved test labs that NO_x emissions and other criteria pollutant levels have been improved over the baseline E-350 gasoline versions. This stage is especially relevant for the TCEQ's NTRD program because of the significant NO_x reductions predicted from development of this technology at nearly 50% over a comparable gasoline vehicle.

Project Objectives / Technical Approach

From the grant contract Grant Activities (Scope of Work):

> *"Article 1. Objectives*
>
> *1.1 The objectives for this work are:*
>
> *1.1.1. Design, construct, and test a propane powered Ford E-350 truck.*
>
> *1.1.2. Verify through testing that NO_x emissions have been reduced from gasoline version by up to 50%."*

Tasks

From the grant contract Grant Activities (Scope of Work):

> *Task 3: Finalize confirmation prototype design*
>
> *2.3. Task Statement: The PERFORMING PARTY will finalize the confirmation prototype design.*
>
> *2.3.1. The PERFORMING PARTY will begin designs in CAD for the confirmation prototype components. These components will be production representative and will meet all requirements for final vehicle-level emissions verification.*
>
> *2.3.2. The PERFORMING PARTY will confirm the final designs for all new components of the confirmation prototype and release all CAD models and drawings.*
>
> *2.3.3. The PERFORMING PARTY will confirm that the advanced prototype components are functionally equivalent to the confirmation prototype components.*
>
> *2.3.4. Schedule: The PERFORMING PARTY shall complete this task within 4 months of the signed Notice to Proceed Date as issued by TCEQ.*
>
> *2.3.5. Deliverables: The PERFORMING PARTY shall submit a report to the TCEQ upon completion of this task. This report will address whether the advanced prototype components, used in hot weather and altitude calibration testing, are functionally equivalent to the confirmation prototype components. This report also will include but is not limited to the CAD models and drawings for all new components of the confirmation prototype.*
>
> *2.3.6. Approval to Proceed with Further Tasks: The TCEQ will determine whether additional tasks will be approved and funded depending upon the results of the functional equivalency assessment. The PERFORMING PARTY must receive written approval from the TCEQ to proceed with any further tasks to be eligible for additional funding under this Agreement.*

Confirmation Prototype final CAD models

Roush created CAD models for the confirmation prototype (CP) level design. The CAD models are shown below in the various figures. The entire system is broken down into the following areas: engine fuel circuit, chassis fuel lines, fuel tank mounting, fuel tank design, and fuel supply system.

The Fuel Rail Pressure Control Module (FRPCM) was updated to accommodate a 3/8 inch Jiffy Tite supply and deleted the 0.04 inch supply line communication port. Figure 1 below shows the FRPCM and FRPCM to intake bracket.

Figure 1: Engine fuel circuit FRPCM

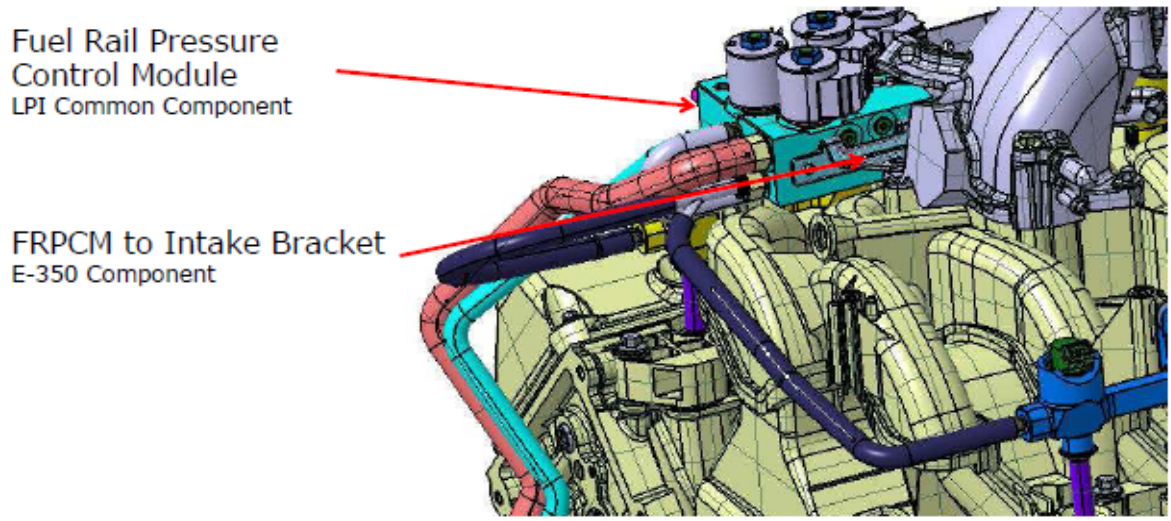

The fuel rail supply line comes off of the FRPCM as 3/8 inch line and turns into a “Y”. The “Y” has two ¼ inch lines that supply the fuel rails. The fuel rails each have 1/4 inch lines that “T” together and return to the FRPCM. This is illustrated in Figure 2 below.

Figure 2: Engine fuel flow circuit

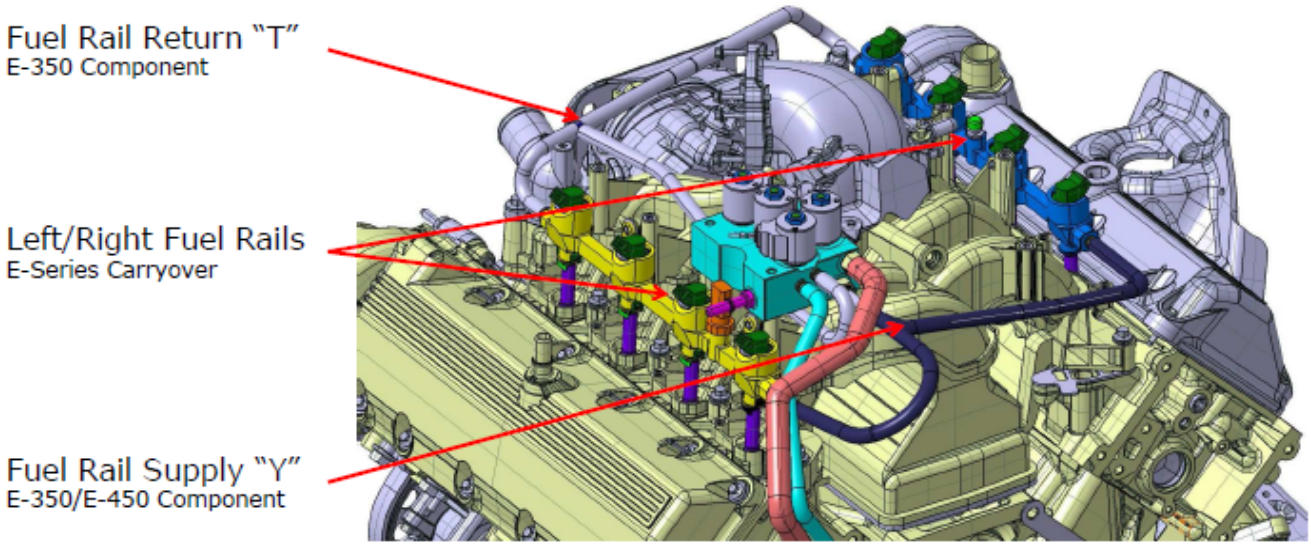

The forward supply line was increased by 3/8 inch to improve the capability of the fuel flow and engine control. These are depicted below in Figure 3.

Figure 3: Chassis fuel line

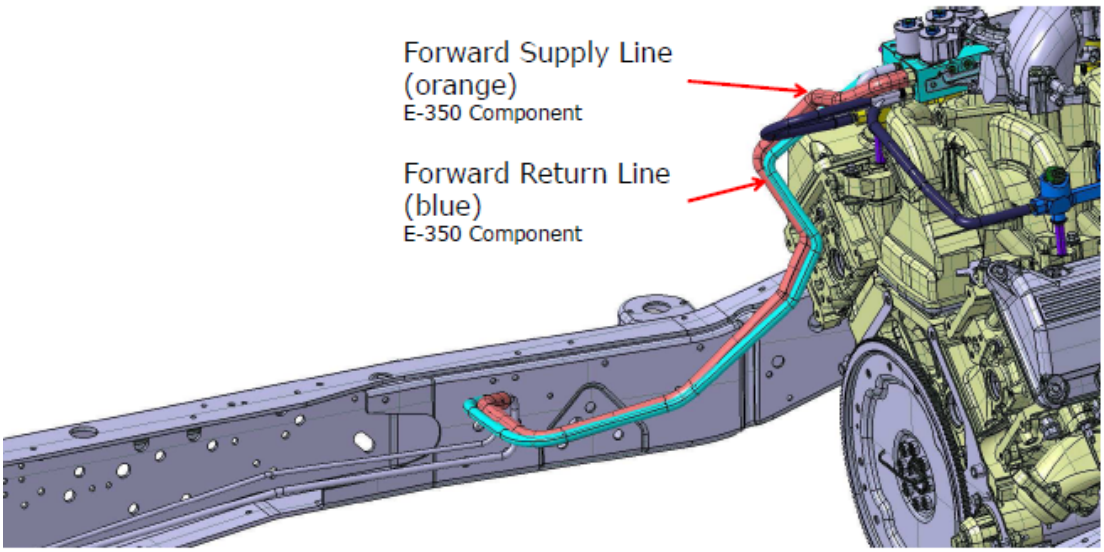

Twin aft axle tanks are mounted to the bottom of the frame rails on the 158 inch and 176 inch wheel base frames. Figure 4 below shows the 158 inch wheel base.

Figure 4: Twin aft axle tanks

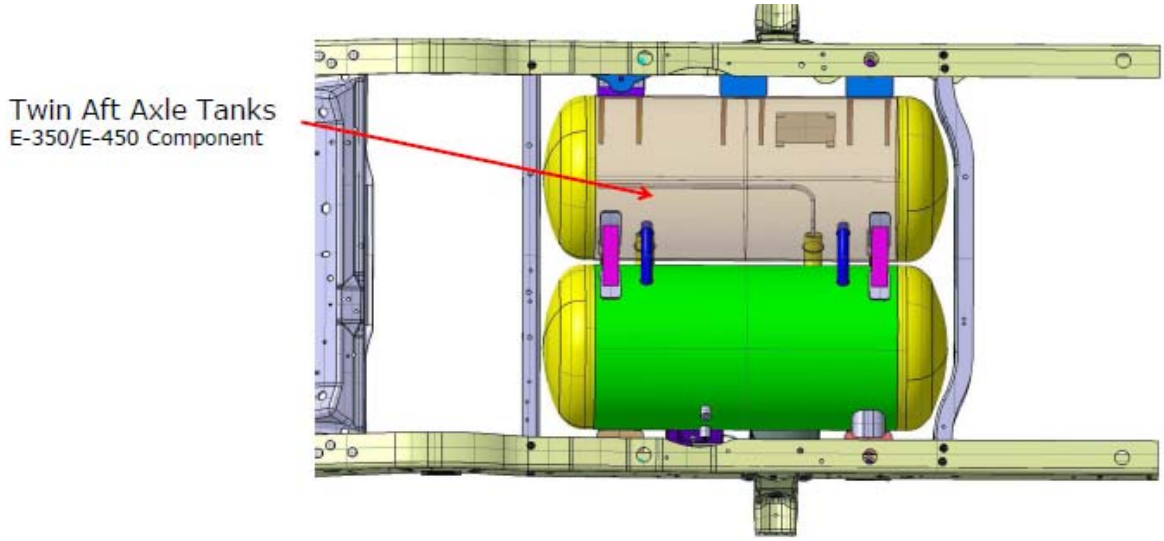

The CP level fuel tank mounting brackets have machined clearance cuts to clear the unique frame flange. Production mounting brackets will not have the machining done; this feature will be updated in the bracket casting. Figure 5 illustrates the left and right brackets.

Figure 5: Fuel tank mounting brackets

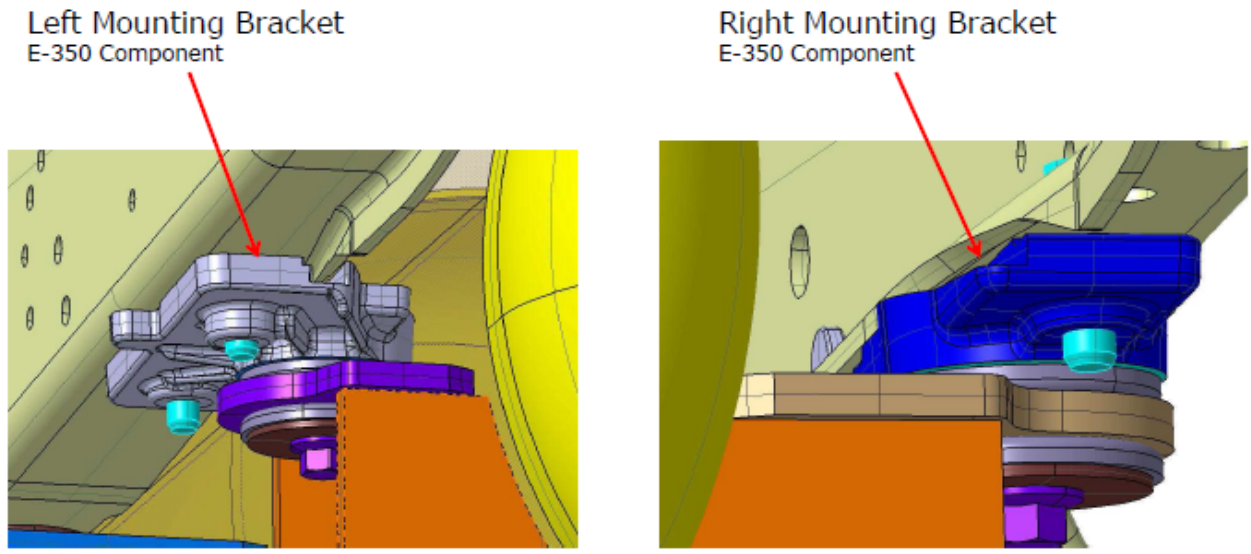

The AP level tank incorporated a 3/8 inch supply line into an improved excess flow valve and remote shut off valve intended to mimic production intent hardware and improve on fuel flow restriction. These changes were incorporated into the existing multivalve for proof of concept.

The CP level tank saw the proven changes move from the existing multivalve to outside of the tank next to the multivalve as production intent parts. The production intent parts included a new 3/8 inch supply circuit, an excess flow valve, a flow solenoid, and an external shut off valve

into a separate supply system. Both the location of the AP level and new CP level location are shown below in Figure 6.

Figure 6: Fuel tank

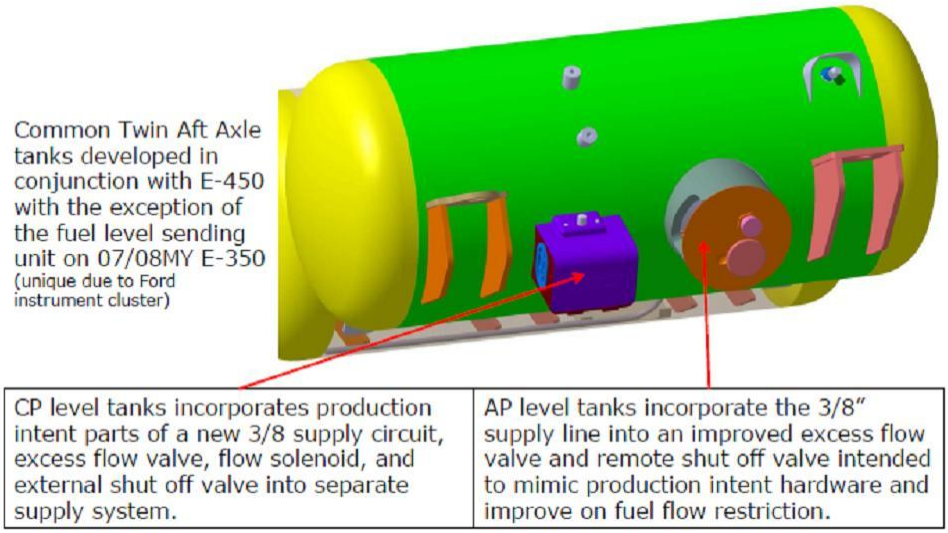

The fuel tank design was modified to accept the following changes at the CP level. The tank bleeder valve was relocated for improved access to tank vapor area above the 80% fill liquid vapor line. The tank also received an additional weldment to incorporate features for the new flow control solenoid and new supply system. These items are pointed out below in Figure 7.

Figure 7: Fuel tank updates

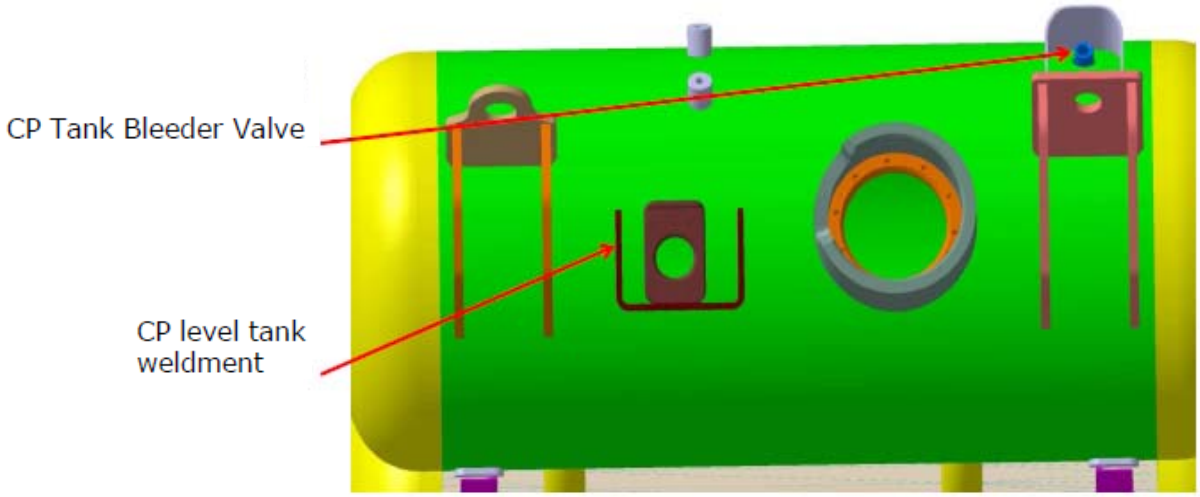

Figure 8 below shows the tank weldment. This weldment receives an o-ring so that the supply valve does not leak. The weldment also has a slot in it to accept the protective cover. The supply

valve has an external shut off valve, a flow solenoid, and a 3/8 inch Jiffy Tite connector attached to it.

Figure 8: Supply valve

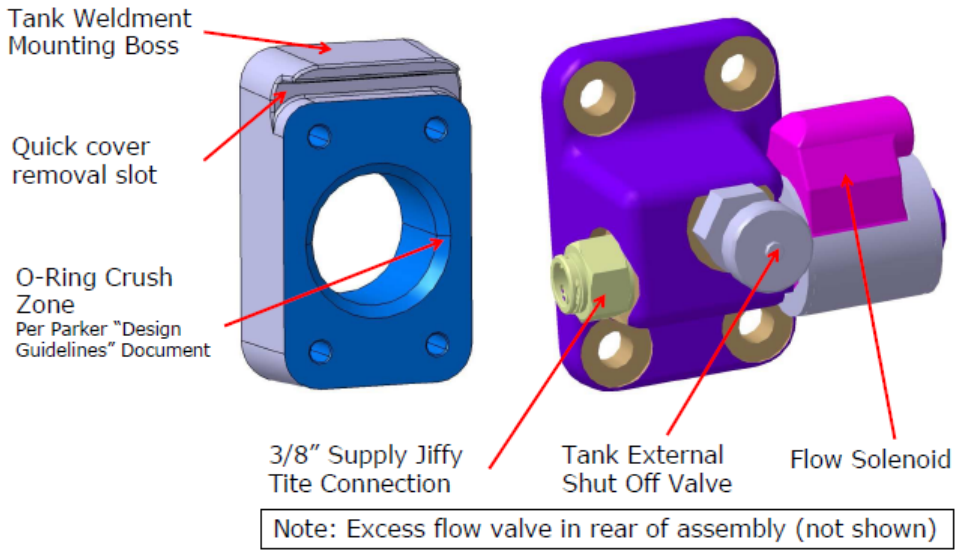

The quick cover hooks in to the tank weldment to protect the supply valve. There are two grommets that also fit into the same tank weldment. One allows the fuel line to pass-thru and the other allows for the electrical wires to pass-thru. These are on opposite sides of the weldment. The quick cover and grommet are shown below in Figure 9.

Figure 9: Quick cover and grommet

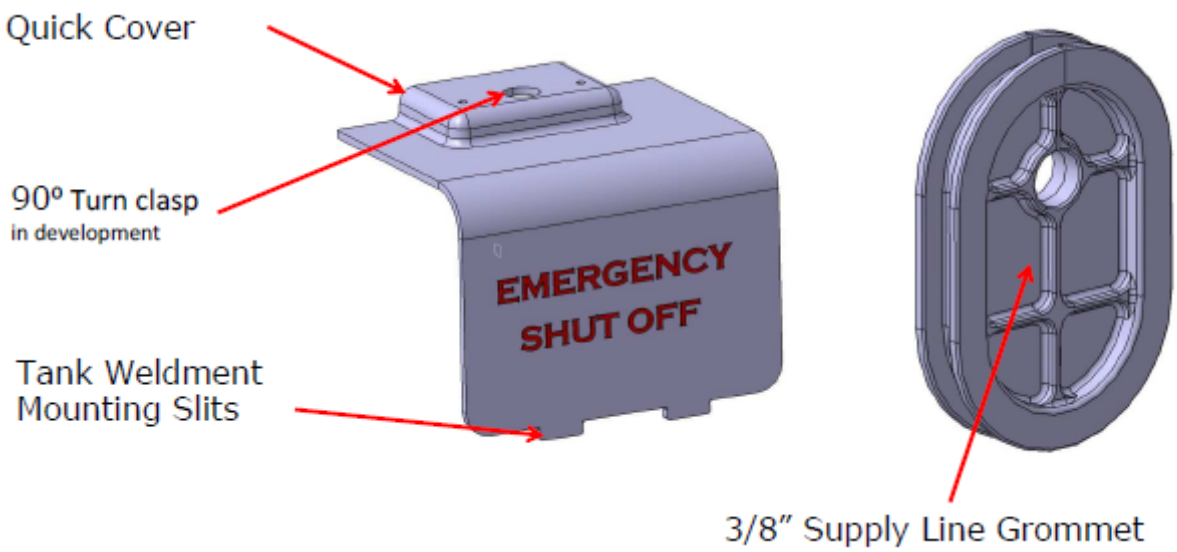

The fuel tank is filled by an incoming line from the fill valve. This goes into an inline fuel filter and then into the multivalve. A 1/4 inch return to tank line also hooks into the multivalve. The

multivalve also has a 3/8 inch diameter line that supplies the chassis lines. These are shown below in Figure 10.

Figure 10: Fuel supply system

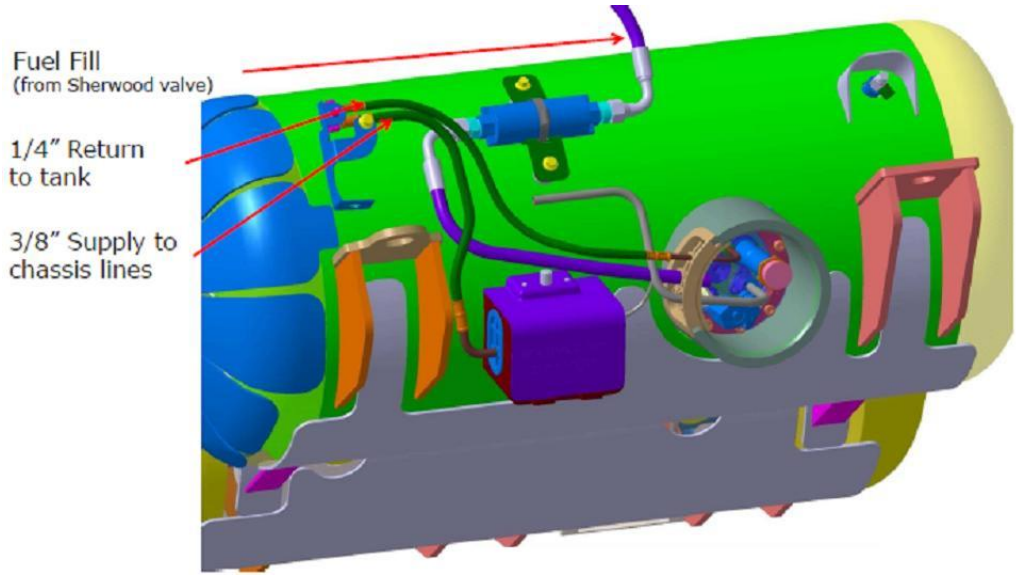

The fuel tank assembly is comprised of multiple components. Figure 11 below identifies the vapor dome balance tubes that connect the top of the tanks to the tank fuel level balance tubes on the bottom. One of the tank fuel level balance tubes has the jet pump pick up tube passing through it. This allows the jet pump to pick up fuel from the opposite corner of the fuel tank assembly. In addition to the inline fuel filter on the tank fill, there is an additional in tank fuel filter that functions between the engine and the pump. The excess flow valve is a safety device that prevents the tank from evacuating should the supply line get severed. This valve would shut the free flow of gas off.

Figure 11: Fuel supply system – inside tank overall

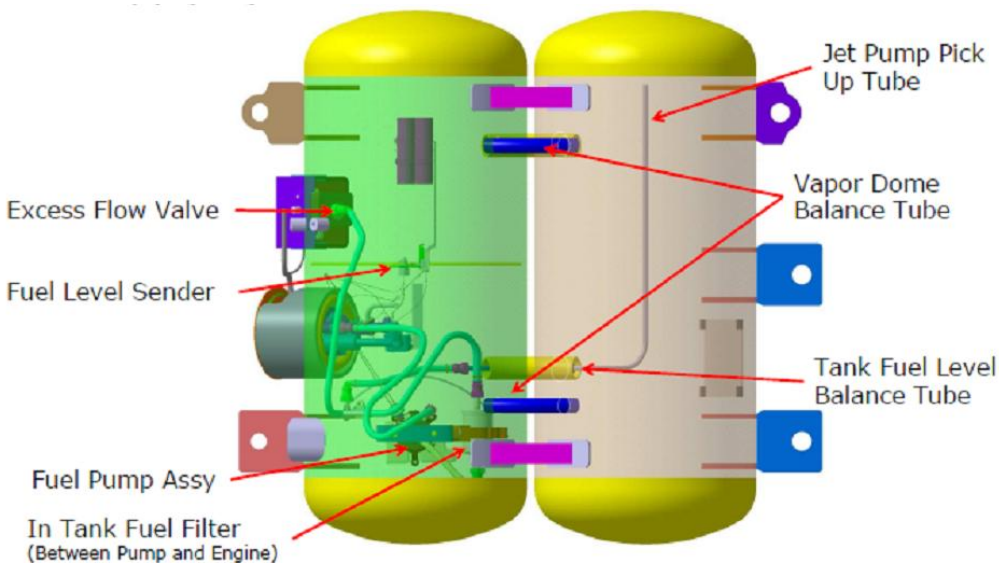

The tank assembly has an internal sump baffle. This baffle is in place to keep fuel around the jet pump. If the baffle was not there it might be possible to have a situation where the fuel sloshes away from the intake on the jet pump thus starving it. The fuel level sender sends the signal to the gas gauge. These items are displayed in Figure 12.

Figure 12: Fuel supply system – inside tank

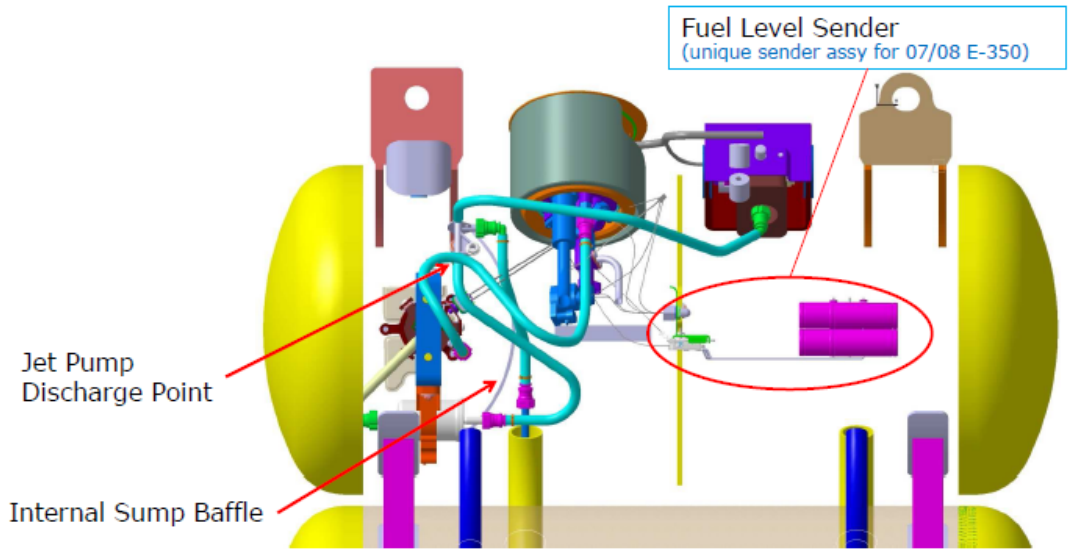

Functional Equivalency evaluation of Advanced Prototype vs. Confirmation Prototype

Roush converted two E-350 DRW vehicles to AP level. The first was a purchased 2008 box van. The 2008 E-350 build began on September 22, 2010, and finished on October 14, 2010. The VIN number for this vehicle is 1FDWE35L88DB51278. The vehicle is labeled “FL01” with a sticker on the upper passenger-side windshield.

The second vehicle was a 2008 Frito-Lay box van. The 2008 Frito-Lay E-350 build began on October 9, 2010, and finished on November 16, 2010. The VIN number for this vehicle is 1FD2E35L2FDA68699. The vehicle is labeled “FL02” with a sticker on the upper passenger-side windshield.

The major system level components consist of the following items: fuel rail system, fuel line system, fuel tank system, fuel fill system, pressure relief system, fuel rail pressure control system, electrical system and an injection pressure and temperature sensor (IPTS) interface. The differences between the AP and the CP level are noted below. These differences are applicable to both AP vehicles.

- The fuel rail system had no differences from the CP.

- The fuel line system differed from the CP in that the fuel rail supply and return assemblies utilized fabricated prototypes that included flexline and AN fittings. These assemblies were functionally equivalent to the CP level. Also, the forward return line differed from the CP in that the routing of the line was different.

- The fuel tank system is comprised of two major areas: the aft axle fuel tank & heat shields and the fuel tank mounting & miscellaneous hardware. The aft axle fuel tank & heat shields differed from the CP in that the aft axel fuel tank assembly used an E-450 pre-production prototype as a surrogate part. The tank utilized a revised baffling design that improved low fuel handling and performance on grades. It also used a revised fuel send for improved accuracy and a revised fuel supply circuit excess flow valve. The fuel tank heat shield differed from the CP in that the geometry was revised to accommodate the modified tank. The second group of the fuel tank mounting & miscellaneous hardware area differed from the CP only in the tank collar–grommet. The former supply line opening was blocked.

- The fuel fill system had no differences from the CP.

- The pressure relief system had no differences from the CP.

- The fuel rail pressure control system in the AP differed from the CP in that the modified FRPCM (enlarged supply-side circuit) will not have a 0.02 inch orifice and the prototype FTP sensor/hose assembly on the CP level of the part was still to be determined.

- The electrical system & IPTS interface differed from the CP in that the main vehicle wiring harness was fabricated but was functionally equivalent to the CP level. Functional equivalency was determined since both wire harnesses were built to the same wiring

schematic. Building both harnesses to the same schematic means the connectivity between components would be unchanged.

All systems were determined to be no different from or functionally equivalent between the AP and CP level designs.

Discussion / Observations

Objectives vs. Results

The project objectives for these tasks and deliverables have been met. The AP level vehicles have been shown to be functionally equivalent to CP level, and have provided the engineering team with the necessary feedback to continue on with the CP level hardware design and calibration.

Critical issues

There are no critical issues documented at this time.

Technical and commercial viability of the proposed approach

The Liquid Propane Injection System, at the AP level, has shown through this stage that the E-350 vehicle is a good platform for this technology and that the assumed scope of work for this program should meet the objectives.

Scope for future work

The scope of work for the remainder of the E-350 program under the grant contract should continue as defined and under the previous assumptions.

Intellectual Properties / Publications / Presentations

The Roush LPI system uses a unique integrated system for controlling injector leakage during engine-off soak periods. Roush considers this technology to be proprietary, and has submitted notice of intent to patent. This system allows the propane in the fuel rail to be isolated from the rest of the system and vented to the evaporative emissions canister, where it is stored until the vehicle is started again. This system eliminates any propane leakage past the injectors, which historically has been a concern with liquid injection systems due to the relatively high system pressures.

Summary / Conclusions

The program tasks and deliverables as described above have been completed and it has been determined by Roush to be appropriate to proceed the scope of work defined in the next scheduled tasks and deliverables.

Acknowledgements

Roush has an excellent working relationship with Ford Motor Company. Roush has long been a strategic partner with Ford Motor Company in the area of powertrain design, development and engine calibration, providing a strong foundation and experience level for the propane program. Leveraging that foundation, the LPI systems developed by Roush incorporate the creation of advanced calibrations and improved hardware systems, greatly impacting the vehicles performance characteristics and its emission performance.

Appendices

Appendix A: Supporting Documentation

The information in this appendix was claimed by the grantee as Proprietary and/or Confidential. To view this information please contact the New Technology Research and Development program at:

(512) 239-4950

Or

ntrd@tceq.state.tx.us