# Texas Commission on Environmental Quality
# New Technology Research & Development (NTRD) Program
# Monthly Project Status Report

| | | | |
|---|---|---|---|
| **Contract Number:** | 582-11-13469-2019 | | |
| **Grantee:** | QuantLogic Corporation | | |
| **Report for the Monthly period:** | July 1, 2011, to July 31, 2011 | **Date Submitted:** | August 10, 2011 |

## Section I. Accomplishments

*Provide a bulleted list of project accomplishments as well as a description of their importance to the project.*

- Continue procurement of other components for engine retrofit and setup. 20% completion.
- Continue engine setup with control system and retrofit with dual loop EGR systems. 30% completion.
- Continue commercialization effort, conducted design analysis for EGR loop in a deployable package, and conducted alternative analysis for high pressure EGR cooling.
- Project is overall on target to meet key milestone

<u>Task 1: Procure Components within 3 months: 20% completion of the task.</u>

Continued in the components procurement process:

- Rapid prototyping engine control unit (ECU) is a key component to the implementation of low engine-out emissions control strategy. An open-ECU platform is a best fit for the project for its flexibility of programming and robustness for vehicle installation and application at the vehicle retrofit stage of the project.
- Four different types of Open ECU (rapid prototyping control system) were investigated for functions of sensor inputs, actuator drive outputs, injector driver capability, etc. They are RapidPro+MicroAutoBox from dSPACE Inc, MotoHawk from Woodward, Compact Rio from National Instrument, as well as M250+S070 OpenECU from Pi-Shurlok. The selection of the Rapid Prototyping Engine Control System is primarily dependent on the fuel injector drive capabilities. The fuel injector in the International DT570 test engine is HUEI type which has two solenoids per injector as shown in Figure 1, which means the control system must have twice as much injector drivers as a normal six cylinder engine.

**Figure 1 G2.9 HUEI Injector used in the International DT570 Test Engine**

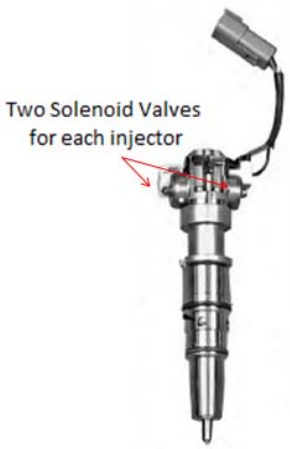


- Because the requirement for 12 injector drivers for this 6 cylinder engine, Pi-Shurlok OpenECU system was selected for the control system development and being procured. Figure 2 shows the logic of generating two injector drive pulses from one fuel injection command which will be used in our rapid prototyping engine control setup. As shown in Figure 2, for each normal injection pulse (command for fuel injection event), two injector drive pulses will be generated to open the respective solenoids as shown in

Figure 1.

In the later vehicle retrofitting phase, a production oriented ECU will be used.

**Figure 2 HUEI Injector Driver Output Illustration (line 1: Normal injector command from OpenECU, Line 2 and Line 3: Modification of injector drivers to provide two outputs for one injection event)**

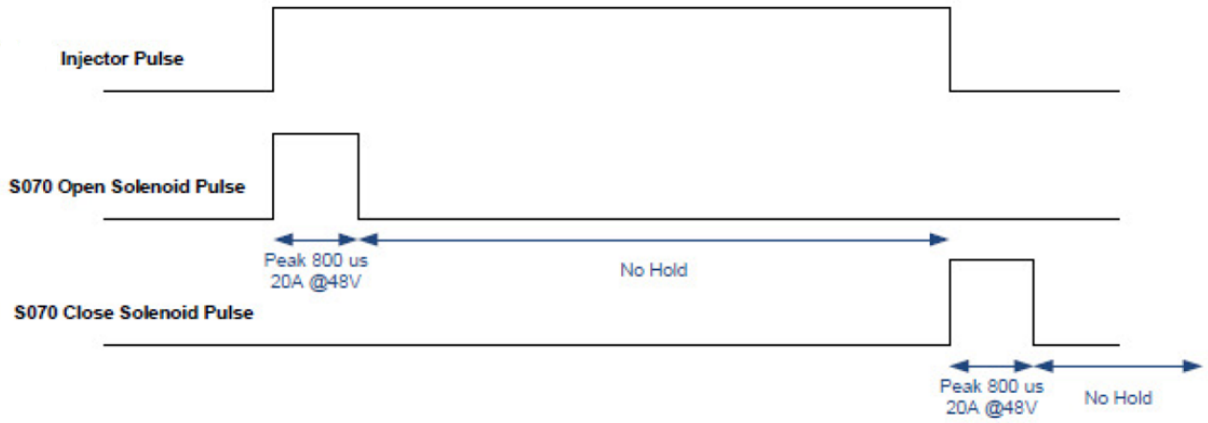


- The configuration of OpenECU, injector drivers as well as input signals is shown in Figure 3. Two M250 OpenECU will be linked as "Master and Slave" configuration via CAN2.0 communication line. Each of the M250 will control a S070 injector drive to control 3 injectors (6 solenoids). The signals from various sensors and drive of other actuators such as EGR valves and Variable Geometry Turbocharger (VGT) can either be connected to the master controller alone or can be parallel to each controller at the same time. Figure 3 shows the signal and actuator drive configuration with the OpenECU system.

**Figure 3 OpenECU (Pi-Shurlok) Signal and Actuator Driver Configuration**

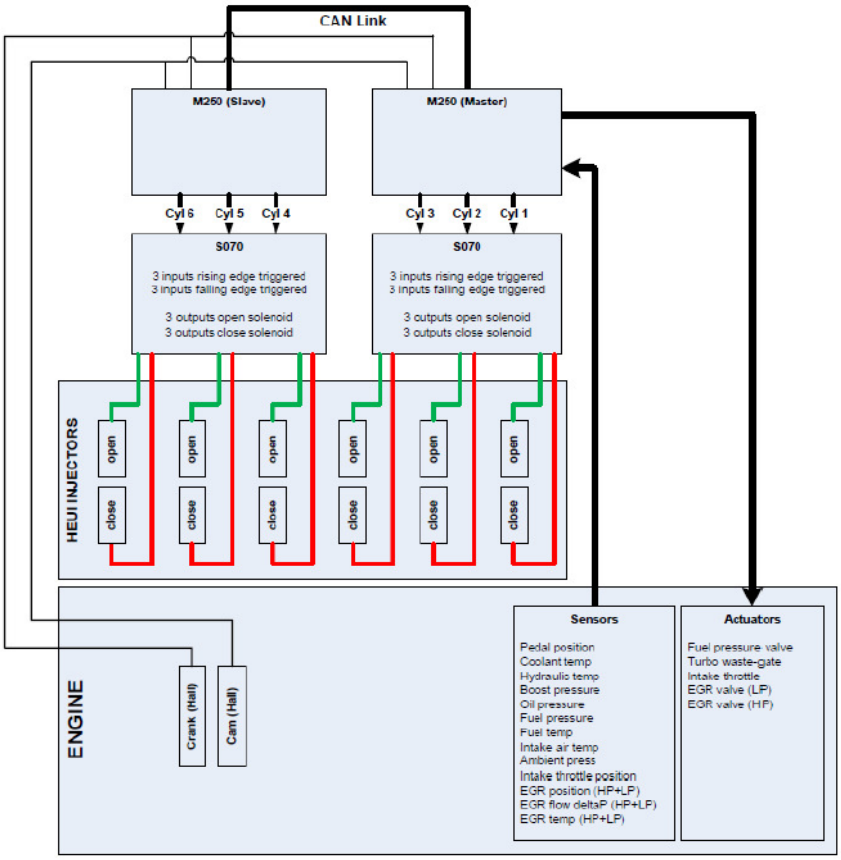


- Other key components such as crank angle encoder system, aftertreatment system and replacement parts for the engine were identified and are also being procured. The deliveries of the components are expected to be in early September 2011.

<u>Task 2: Set up engine retrofit and engine control systems within 6 months. 30% completion of the task.</u>

Continuing of engine installation:

- An engine driveshaft was ordered and received as shown in Figure 4. The Adaptor plate between the driveshaft and engine flywheel was designed and in machining stage. Several engine components such as high pressure EGR pipe, engine starter, alternator and belt, oil filler pipe were replaced to resume the engine to its standard configuration, as shown in Figure 5.

**Figure 4 Heavy-duty Driveshaft for Connection of the Engine to DYNO**

**Figure 5 New Engine Components were Procured and Installed**

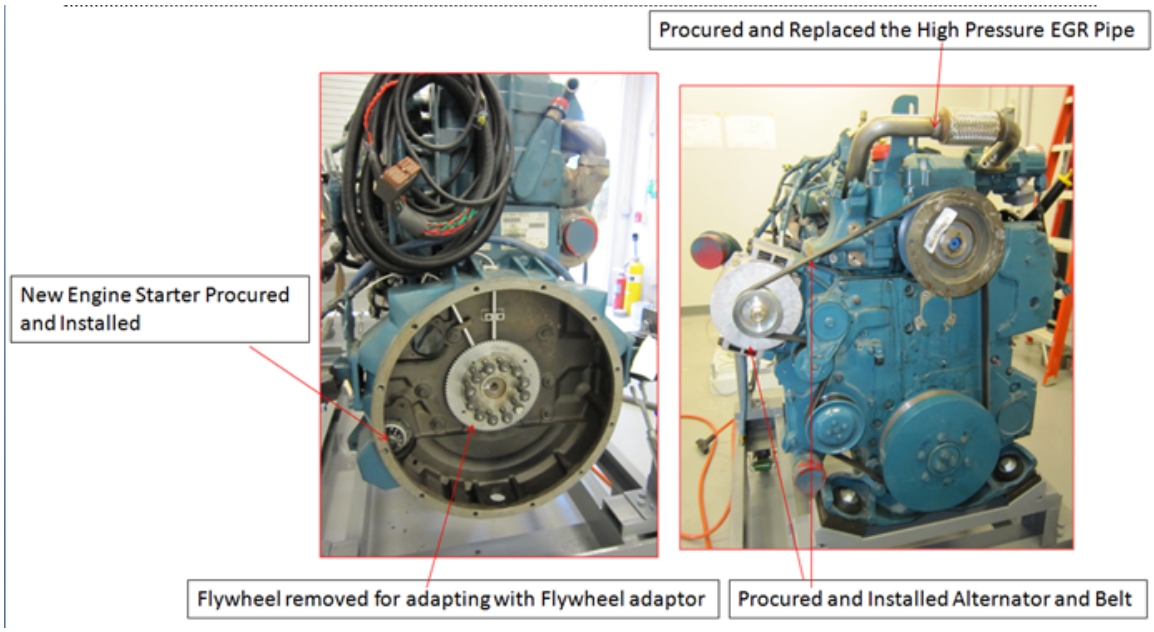

*Indicate which part of the Grant Activities as defined in the grant agreement, the above accomplishments are related to:*

The authorized tasks are related to:

- Task 1: Procure Components within 3 months:
  a) Finalize the specifications for and procure all test components needed for the completion of the project,
  b) Procure all test components needed to complete the project.
- Task 2: Set up engine retrofit and engine control systems within 6 months.
  a) Set up the engine, dual loop EGR retrofit, and engine control systems in the laboratory in preparation for testing.
  b) Install instrumentation for monitoring all major engine operation parameters
  c) Set up the engine control system for fueling control, dual loop EGR control, and boost control.

## Section II: Problems/Solutions

*Problem(s) Identified: Report anticipated or unanticipated problem(s) encountered and its effect on the progress of the project*

a) None

*Proposed Solution(s): Report any possible solution(s) to the problem(s) that were considered/encountered*

a) N/A

*Action(s) Conducted and Results: Describe the action(s) taken to resolve the problem(s) and its effect*

a) N/A

## Section III. Goals and Issues for Succeeding Period:

*Provide a brief description of the goal(s) you hope to realize in the coming period and identify any notable challenges that can be foreseen*

- Maintain contacts with suppliers and vendors on their delivery schedule of ordered components.
- Continue procurement of other components for engine retrofit and setup.
- Continue engine setup with control system and retrofit with dual loop EGR systems.
- Continue commercialization effort, design high pressure EGR loop in a deployable package.

*Date*: August 10, 2011

*Authorized Project Representative's Signature*

**NOTE:** *Please attach any additional information that you feel should be a part of your report or that may be required to meet the deliverable requirements for tasks completed during this reporting period.*