NTRD Program Disclaimers

1. Disclaimer of Endorsement:

The posting herein of progress reports and final reports provided to TCEQ by its NTRD Grant Agreement recipients does not necessarily constitute or imply an endorsement, recommendation, or favoring by TCEQ or the State of Texas. The views and opinions expressed in said reports do not necessarily state or reflect those of TCEQ or the State of Texas, and shall not be used for advertising or product endorsement purposes.

2. Disclaimer of Liability:

The posting herein of progress reports and final reports provided to TCEQ by its NTRD Grant Agreement recipients does not constitute by TCEQ or the State of Texas the making of any warranty, express or implied, including the warranties of merchantability and fitness for a particular purpose, and such entities do not assume any legal liability or responsibility for the accuracy, completeness, or usefulness of any information,apparatus, product, or process disclosed, or represent that its use would not infringe privately owned rights.

New Technology Research & Development Program
Grant Contract 582-5-70807-0018

Tasks 3, 4, 5 & 6 Deliverable Report
Final Report

The preparation of this report is based on work funded in part
by the State of Texas through a Grant from the
Texas Commission on Environmental Quality.

ADVANCED ENERGY SYSTEMS

GTI REPORT

Small Scale Natural Gas On-site Liquefier Project

Final Report

GTI Project Number 20285

TCEQ Contract Number 582-5-70807-0018

February 2007

Submitted to:
Texas Commission on Environmental Quality

Prepared by:
Ken Kriha
Tony Lindsay
William Liss
Brian Weeks
David Zuckerman

Gas Technology Institute
1700 South Mount Prospect Road
Des Plaines, IL 60018
www.gastechnology.org

Small Scale Natural Gas On-site Liquefier Project

TCEQ Project # 582-5-70807-0018

Table of Contents

3	Project Summary
3	Project Background
3	Project Goals
4	Project Results
5	Small Scale Liquefaction Technology Description
8	Natural Gas Liquefaction System Controls
8	Project Task Overview
9	System Control and Operation
10	Diagnostics and Safety
11	Control System Hardware Upgrades
18	Gas Clean-up System Refinement
18	Project Task Overview
19	Gas Clean-up System Control and Operation
20	Natural Gas Desulphurization System and Materials
24	Natural Gas Liquefier System Mechanical and Efficiency Enhancements
24	Project Task Overview
25	System Mechanical and Efficiency Upgrades
32	Natural Gas Liquefier System Optimization, Verification, and Field Test
32	Project Task Overview
32	System Optimization and Verification
33	Natural Gas Liquefier and Field Test Overview
35	System Optimization, Verification, and Field Test Discussion
39	System Optimization, Verification, and Field Test Procedures and Analysis
44	System Commercialization
44	Overview

45	System Economics
45	Commercialization Partner
46	Benefits and Potential Markets
49	Project Conclusion
51	Appendix and Attachments

Project Summary

Project Background

This purpose of this project was to verify the technical and economic feasibility of on-site natural gas liquefaction technology for emerging commercial applications. The need for on-site natural gas liquefaction for small-scale applications is driven by economic and environmental drivers. This project demonstrated that the process is technically viable and ready for the marketplace.

Liquefied natural gas (LNG) offers an energy density comparable to diesel fuels and produces considerably less pollution when combusted, but its historically high cost of production and the need to store it in expensive cryogenic tanks have prevented its widespread use in commercial applications. Consequently, natural gas liquefiers have typically been built for very large-scale ocean transport projects to receive "stranded" supplies of natural gas from places like Trinidad or Indonesia for redelivery to countries with developed natural gas pipeline infrastructure, such as the U.S. Peakshaving is the other "conventional" application for LNG. Custom-made LNG plants with large capacity and high capital costs serve to supplement gas supplies for large gas distribution companies during high demand (peak) periods. These "conventional" applications for LNG address volumes in the capacity ranges of hundreds of millions of standard cubic feet per day (SCFD) or greater.

Beyond these applications, however, a growing need has been demonstrated for smaller-scale liquefaction technology that can:

- Capture stranded gas reserves from low-output wells that cannot support the economics to build a pipeline.
- Capture "opportunity fuels" such as landfill gas, wastewater gas, and digester gas.
- Provide peakshaving or stand-by gas for remote community natural gas service.
- Provide a low-emissions fuel for medium and heavy-duty trucks and buses.

For example, approximately 119 BCF of natural gas was vented or flared in the U.S. in 2005 due to lack of pipeline infrastructure or because of capacity restrictions[1]. On-shore Texas production represented about one-third of this total. In addition, there are over 600 landfill candidates for methane recovery in the U.S., generating approximately 725 million cubic feet per day of landfill gas, or about 360,000 mmbtu's of methane[2]. If this landfill gas were converted to LNG fuel, it represents the displacement of about 2.6 million gallons of diesel fuel each day on the road. Additionally, the LNG fueled vehicles would produce about 75 % fewer NOx emissions than diesel engines.

Project Goals

To address the need for small-scale natural gas liquefaction, Gas Technology Institute (GTI) developed a small-scale natural gas liquefaction technology that was specifically designed to convert relatively small volumes of methane to LNG in a cost-effective manner. In cooperation with the U.S. Department of Energy (DOE), GTI developed a pre-commercial small-scale natural gas liquefaction system at its labs in Des Plaines, Illinois.

The GTI-patented liquefaction system uses a specially designed and efficient multi-component refrigeration composition. In certain respects, this design incorporates proven features seen in very

[1] U.S. DOE Energy Information Administration, "2005 U.S. Gas Production Vented and Flared"
[2] U.S. EPA, "An Overview of Landfill Gas Energy in the United States", April, 2006

large-scale industrial liquefaction technology while allowing the use of cost-effective and proven lower-pressure refrigeration equipment. This breakthrough enables cost-effective capital pricing to be achieved at a small scale while also having greater conversion efficiency than is seen in other approaches. The combination of lower capital cost and higher efficiency makes this the leading technology for producing LNG in this size range. A significant cost advantage can be gained by the ability of this technology to be factory built and skid-mounted for ease of shipment. This also reduces expensive onsite construction and assembly costs.

In July 2004, GTI submitted a proposal to the Texas Commission on Environmental Quality (TCEQ) to enhance its small-scale liquefaction system and verify through testing that the technology is ready for commercialization. GTI submitted the proposal for funding through the Texas Emissions Reduction Program, or "TERP" via the New Technology Research and Development (NTRD) fund. The NTRD Program provides financial incentives to encourage and support research, development, and commercialization of technologies that reduce pollution in Texas through the issuance of state funded grants. In July 2005, TCEQ and GTI entered into a project agreement in which GTI would perform the following tasks:

- Refine the small-scale liquefaction system controls to allow for safe, unattended operation of the liquefaction system,
- Automate a gas clean-up system to allow for scheduled regeneration of CO2 and sulfur removal equipment,
- Enhance the system's mechanical and energy efficiency,
- Test the system in a field environment, make the technology available for Texas-based LNG fleet operators, and deliver LNG product for commercial use[3].

PROJECT RESULTS

The small-scale liquefaction system project met or exceeded all major project technical goals and deliverables.

The system operated for 32 days over a period of 3 months. Production pauses were used to make system modifications pursuant to interim test results.

The system achieved an average output of 1,095 gallons per day of fuel-quality LNG, with peak output exceeding 1,500 gallons per day.

System fuel quality exceeded 95% methane, well within specifications for LNG engine manufacturers.

During the project, GTI licensed the technology to a major industrial gas company, meeting NTRD commercialization goals.

GTI provided tours to interested parties, including a major Texas LNG fleet operator, who observed the system during LNG production.

LNG produced from the system was delivered by tanker trucks for use as a vehicle fuel.

Technical issues encountered during system testing were mechanical in nature validating the viability of GTI's system design.

[3] The original project agreement called for a demonstration test in Texas, however GTI's original proposal partner for testing was unable to accommodate the system once it was ready for testing. Consequently, GTI and TCEQ amended the project agreement such that GTI simulated field conditions at its Des Plaines facility and hosted multiple site visits by Texas LNG fleet users and others while producing LNG fuel which was delivered to Texas via tanker trucks.

SMALL-SCALE LIQUEFACTION TECHNOLOGY DESCRIPTION

Figure 1: GTI Skid-Mounted Liquefier

GTI has developed a pre-commercial small-scale natural gas liquefaction system (Figure 1). This nominal 1000-gallon per day system was previously operated by GTI on a manual basis for over two years, with over 90 start-stop cycles. Within the program sponsored by the TCEQ, the small-scale liquefier system control configuration was upgraded to permit automated, unattended operation.

There are a number of technologies in use to liquefy natural gas for large-scale applications. As-yet unsuccessful attempts have been made to commercialize some of these technologies for emerging small-scale applications. Retaining efficiency at small volume production rates has been a significant economic hurdle as has reliability.

GTI's small-scale liquefier is designed to achieve the cooling and phase change in one compact heat exchanger. The approach is based, in large part, on using standard refrigeration equipment and cycles. However, instead of using a single refrigerant compound, the cycle relies on a multi-component refrigerant mixture to achieve a vertical temperature profile in the heat exchanger that can lower the natural gas to temperatures well below -220°F. Using a mixture of refrigerants provides a variable boiling temperature. Natural gas is cooled and liquefied with minimum heat transfer irreversibility. The result is a high-efficiency cycle that can provide lower cost than conventional cascade systems because only one compressor is needed. Many variations on mixed refrigerant cycle (MRC) technology is also used in medium and large liquefaction plants.

Figure 2 shows the temperature and pressure relationship of the refrigeration cycle. The specialized mixture of refrigerant components will selectively condense and subsequently boil in the multi-pass heat exchanger used in the liquefaction system.

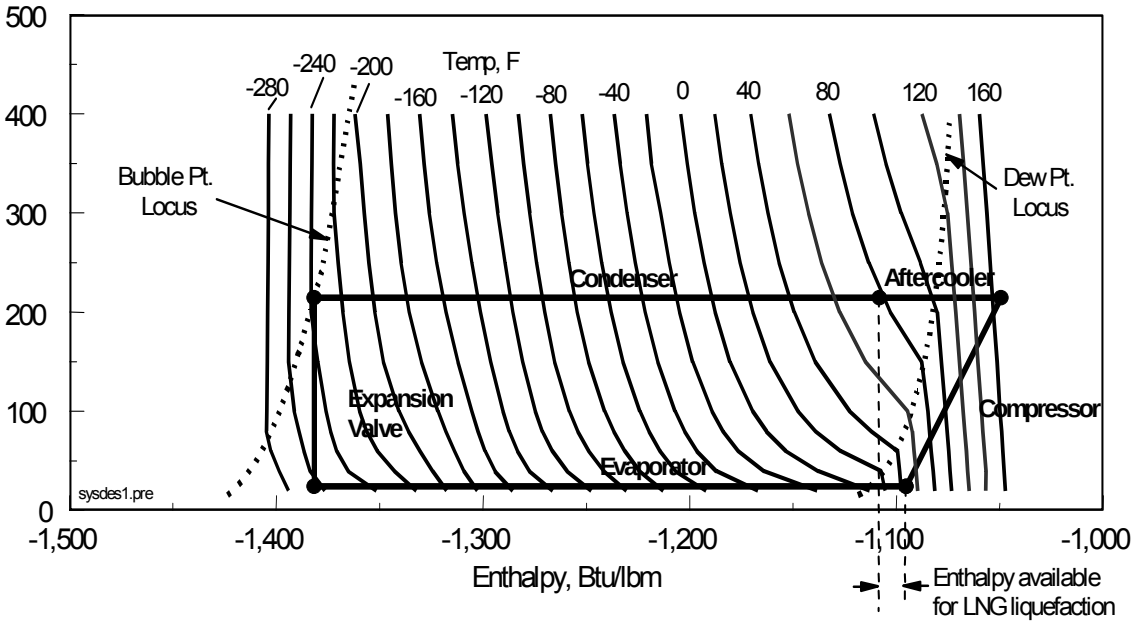

Figure 2: Refrigerant Pressure-Enthalpy Diagram

The system was designed to use available components to the extent possible in order to minimize manufacturing and O&M costs. The following is a listing of the key subsystems and system components. Figure 3 shows a basic schematic of the liquefaction equipment.

- Refrigerant compressor
- Lubricating oil, oil separator and filters
- Evaporative cooler
- Main heat exchanger
- Expansion valve
- Prime mover (engine or electric motor)

The balance of plant for a total system includes several other key pieces of equipment, such as the natural gas desulphurization towers, temperature swing adsorption (TSA) towers for water and CO_2 control, and bulk LNG storage tank.

Figure 3: Schematic of Liquefaction Refrigeration Cycle

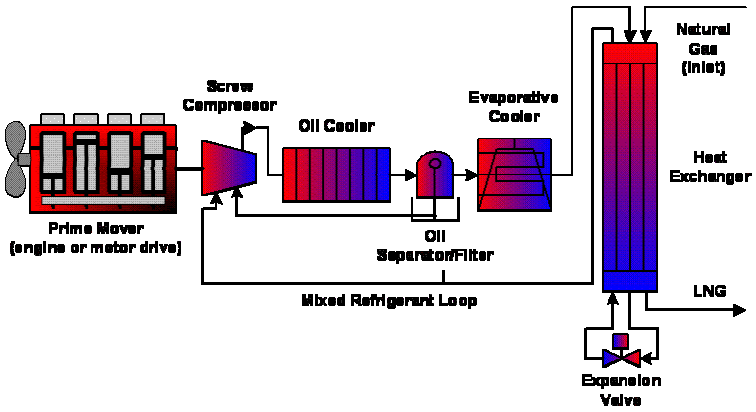

Figure 4 shows an overhead three-dimensional drawing of the liquefier system without the gas clean-up equipment. [4] Note that the system dimensions are designed so that it may be transported via a conventional tractor-trailer rig.

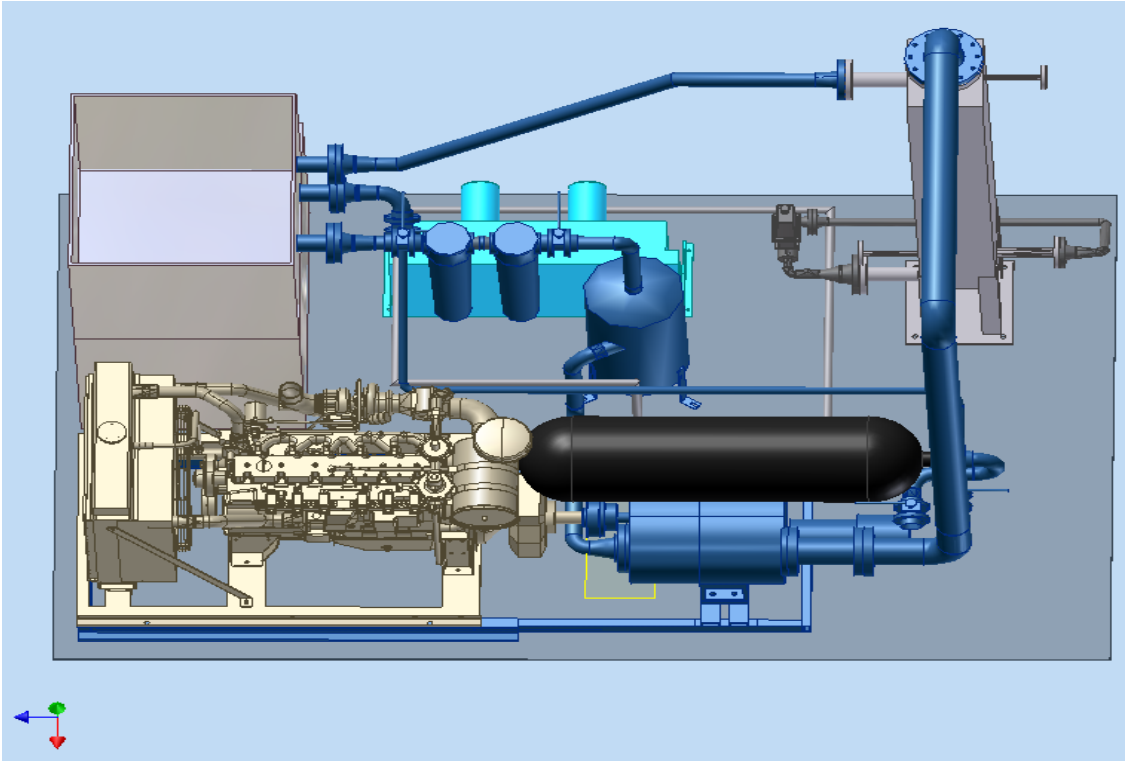

Figure 4: Gas Liquefier System Design Schematic

[4] An actual overhead photograph of the completed system is unavailable because the system was kept underneath a metal roof that was open on all sides. The system is designed for all-weather operation, however it was kept sheltered so that personnel could continue work during all weather conditions without delaying the project schedule.

Natural Gas Liquefaction System Controls

PROJECT TASK OVERVIEW

The first task for this project was to enhance the equipment control algorithm to operate the on-site small-scale natural gas liquefier system in an automatic, unattended manner. Unattended, automatic operation is essential for the commercial viability of this system since manual operation is cost prohibitive with the expense of full-time operating and maintenance personnel. As described below, the task included:

- **Drive Train Control Enhancements**
    - Engine automatic start/warm/cool-down/stop cycle controls,
    - Automatic clutch engagement/disengagement (for screw compressor start/stop),
    - Engine over-temperature protection,
    - Engine oil pressure safety switch (low-oil pressure),
    - New engine controller
- **Refrigeration Controls Enhancement**

  In order to provide continuous stand-alone operation, additional controls were programmed into the Programmable Logic Controller (PLC) to replace some of the run time adjustments that have historically been performed manually. Increasing the control of the oil management in the refrigerant process loop provided consistent cooling performance during GTI's continuous operation testing. This completed task provided for enhanced refrigerant controls to enable filter differential blow down and add-oil separation and sump level switches.
- **Process Gas Controls Modification**

  The process gas control enhancements minimize the effect of the GTI liquefier on existing storage containers at the on-site LNG fuel dispensing station. These enhancements include a process gas flow control valve, and a Micro Motion LNG flow meter with density output. The process flow control valve maximizes the production rate of LNG based on feedback obtained from process variables such as heat exchanger temperatures and the density of the product. The storage level can provide start/stop information to the liquefier controls. During the initial stage of the test run, the LNG product was transferred from GTI's 10,000 gallon storage tank to the LNG transport tankers.
- **PLC Programming and Safety Strategies**

  This task focused on development of PLC programming and safety strategies. Safe operation of the system is critical and was a major guiding principle in system design. The basic control algorithm for the liquefier had already been developed. The control algorithm was expanded from GTI's previously developed control system with an emphasis on safety strategies for stand-alone operation. Start-up procedures now include controls for the engine controller for starting the engine, the clutch actuator for engaging a clutch system, the screw compressor slide valve for loading the load on the compressor, the expansion valve for controlling system pressures and the product valve for controlling the density of product. These were installed in order to better manage the liquefaction process. During operation the PLC continuously monitors process conditions and diagnoses potential alarm conditions. The control logic has been designed to adjust the system for optimum performance and to shut down the system if an alarm condition cannot be resolved.

A hazard analysis was prepared to identify the potential alarm conditions and corrective actions for the system. The results from this analysis, which is shown as Attachment "A" in the Appendix was incorporated in the PLC programming.

SYSTEM CONTROL AND OPERATION

System Control and Operation Overview

This section describes how the system controls that were modified in this project operate the on-site liquefier system. The detailed flowcharts and control logic for the refrigerant cycle are available for review by TCEQ personnel upon request. The logic includes details for the start up, production, and shutdown of the LNG refrigerant loop.

Description of System Start-Up

When running unattended, a LNG liquid level switch in an LNG buffer or storage tank will initiate start-up of the liquefier. Upon receipt of the start signal from the switch, the liquefier start-up algorithm will run. A check of the ambient temperature is performed in order to determine whether or not water will need to be pumped into the evaporative cooler. At temperatures below 32F, water is not needed to provide the desired level of refrigerant cooling.

The control system will then send a start signal to the Murphy Controls to start the engine.. The Murphy will try to start the engine. If the Murphy controller can not start the engine the first time it will wait and try three more times before sending an error to the PLC. Once the engine is running the PLC will monitor the engine coolant temperature and speed. The engine will then commence a warm up cycle run at 1,000 rpm. When the coolant reaches 140° F the PLC will send a signal to the Murphy Controls to put the engine in idle mode at 800 rpm and engage the clutch. The lower RPM reduces the wear on the clutch. The system waits 2 second to allow the clutch to engage and then increases the engine speed up to 1800 RPM in 20 seconds.

The refrigerant cycle control system will then take control of the compressor's slide valve in order to complete the start-up procedure. The load on the refrigerant compressor is gradually increased in increments of 10% every 10 minutes. The refrigerant discharge pressure and temperature along with the refrigerant suction pressure are monitored to assure they remain at safe levels. If the discharge pressure or temperature readings exceed their specified limits, the expansion valve is adjusted to bring the parameter back to the desired level. If the suction pressure is not at the correct value the expansion valve will adjust accordingly. A critical data set that impacts whether or not the expansion valve opens or closes is the discharge pressure and temperature over the suction pressure.

The start-up procedure is complete when the compressor is fully loaded.

Production

By the time the refrigerant compressor is fully loaded the heat exchanger is very close to liquefaction temperatures. Continuous adjustments are made to the expansion valve while monitoring the temperature and pressure of the refrigerant at the discharge and suction of the compressor. The suction pressure target of 10 psig with the GTI refrigerant gas composition will cool the main heat exchanger to liquefaction temperatures. Once the heat exchanger is cooled down to liquefaction

temperatures the clean natural gas is allowed to enter the heat exchanger yet can not exit until the output temperature is -200° F. Once this desired skin thermocouple temperature is reached the LNG product control valve will begin to open 2% every 5 seconds. The position of the LNG product control valve is a function of the density, temperature and flow rate of the natural gas product.

While the LNG is being produced, parameters of the refrigerant loop are monitored for alarm conditions. If an alarm condition occurs in the compressor discharge temperature and pressure, the compressor suction pressure, the heat exchanger inlet temperature, or the flow of natural gas to be liquefier, the program will take action to correct the alarm as well as provide a visual indication that an alarm condition has been met. The specific actions are detailed in the Diagnosis and Safety discussion below. The refrigerant control loop remains in production mode until a stop signal from a manual stop switch or a stop signal is received from the level switch of the liquid storage tank.

Shut Down

The first steps in the shut down procedure are to unload the compressor and to close the pre-LNG solenoid valve. When the compressor is less than 10% loaded, the control loops for the expansion valve and LNG control valve can be disabled. The expansion valve is then opened to 100% along with all the oil drain solenoids. This reduces the pressure difference between the discharge and suction lines of the compressor. When the difference between the discharge pressure and the suction pressure of the compressor becomes less than 20 psig and the compressor is fully unloaded, the PLC will signal to disengage the clutch and turn off the evaporative cooler and oil cooler. The reason behind reducing the differential pressure across the compressor is to reduce the risk of the compressor reversing its rotation. Because a screw compressor is being used with an integral oil pump, any reverse rotation of the screw compressor will also reverse the oil pump flow creating oil starvation issues. The engine will continue to run idle until the engine coolant temperature reaches 175° F at which point it will stop.

Upon completion of the shut down procedure the LNG systems will be placed in stand-by mode.

Diagnostics and Safety

The refrigerant control algorithm has built in safety and diagnostic features. The system will also accept input from the compressor/driver control system. Any alarm condition that would trigger a shut down of the compressor/driver will be relayed to the refrigerant control system. When possible, enough time will be given to unload the compressor prior to shutting down the system.

High Discharge Pressure or Temperature

During the production cycle the control algorithm monitors the refrigerant discharge pressure and temperature of the compressor to assure the system stays within the safety limitations of the equipment. The refrigerant loop has been designed to allow for a maximum pressure of 300 psig; with operation at pressure of 280 psig. The maximum operating temperature of the loop is 240° F. Operating at temperatures above 240° F may cause premature degradation of the oil.

The actions for high discharge pressure or temperature alarms are the same for both of these conditions. First, a warning light will illuminate to indicate that the system has entered an alarm condition. The LNG production will stop, eliminating the thermo load on the heat exchanger. The expansion valve will be opened until the alarm condition is cleared or the expansion valve is opened

100%. If the alarm condition clears, the program will resume maximizing LNG production. If the expansion valve is at 100% and the alarm condition still exists the load on the compressor will be decreased. If the load on the compressor is reduced below 50% the condition will be considered uncorrectable and the system will shut down.

Low Suction Pressure

An alarm condition will be reached if the refrigerant suction pressure falls below 5 psig. This alarm will ensure a positive pressure is always maintained on the compressor. The action for correcting low suction pressure is the same as the action needed to correct the refrigerant high discharge pressure and temperature.

High Heat Exchanger Inlet Temperature

The main heat exchanger inlet temperature can be monitored for diagnostic purposes while LNG is being produced. The heat exchanger inlet temperature is a key variable for predicting LNG production levels. As this temperature increases the production of LNG will decrease. The function of the evaporative cooler is to maintain the temperature of the refrigerant entering the heat exchanger within 25 degrees of the ambient temperature. Since the evaporative cooler is a highly reliable piece of equipment and monitoring of the inlet temperature is primarily for gauging efficiency of the operation (and not a safety condition),this parameter was not automated.

Natural Gas Flow Rate

A flow switch in the natural gas line down stream of the clean up system and upstream of the heat exchanger to monitor the availability of natural gas to the heat exchanger was considered. If the flow control valve is calling for natural gas and the flow switch indicates that there is no flow, a warning signal could be displayed. The warning would indicate a possible issue with the gas clean up system or natural gas supply solenoid. Since the absence of flow of natural gas does not pose a safety issue, it was decided that this parameter did not need to be automated..

Control System Hardware Upgrades

There were a variety of system upgrades that were made by GTI to enable the liquefier to operate in an automated fashion. Following is a pictorial overview of the installed equipment.

Engine Controller

A packaged engine controller (E-Guard) was obtained from Peaker Services, Inc. This was designed and custom fabricated to meet the control and operation requirements of the Cummins 8.3 spark ignited natural gas engine used in this system.[5] The hardware is based on controls equipment from FW Murphy, Woodward Governor, and Altronic.

[5] An electric motor or diesel engine may be substituted for the natural gas fueled engine used in this system, however the Cummins natural gas-fueled engine has a lower emissions profile than a diesel and has lower operating costs than an electric motor.

Figure 5 shows pictures of the installed E-Guard control package. Figure 7 shows a picture of the engine with newly installed controls features, including an actuated clutch (red device in background) to engage the engine and screw compressor. Note the use of quick connect couplings on the controller network to allow the system to be quickly de-coupled and re-connected after shipment to a new site.

Figure 5: Left - Two views of the installed "E-Guard" control package

Figure 7: Below – Cummins natural gas engine with newly installed controls

Figure 6: Note simple, easily accessible controls for engine controller

Figures 8 and 9 show a detailed schematic of the wiring diagram for the new engine controller and a photo of the completed control panel assembly including the master controls and relay box assembly.

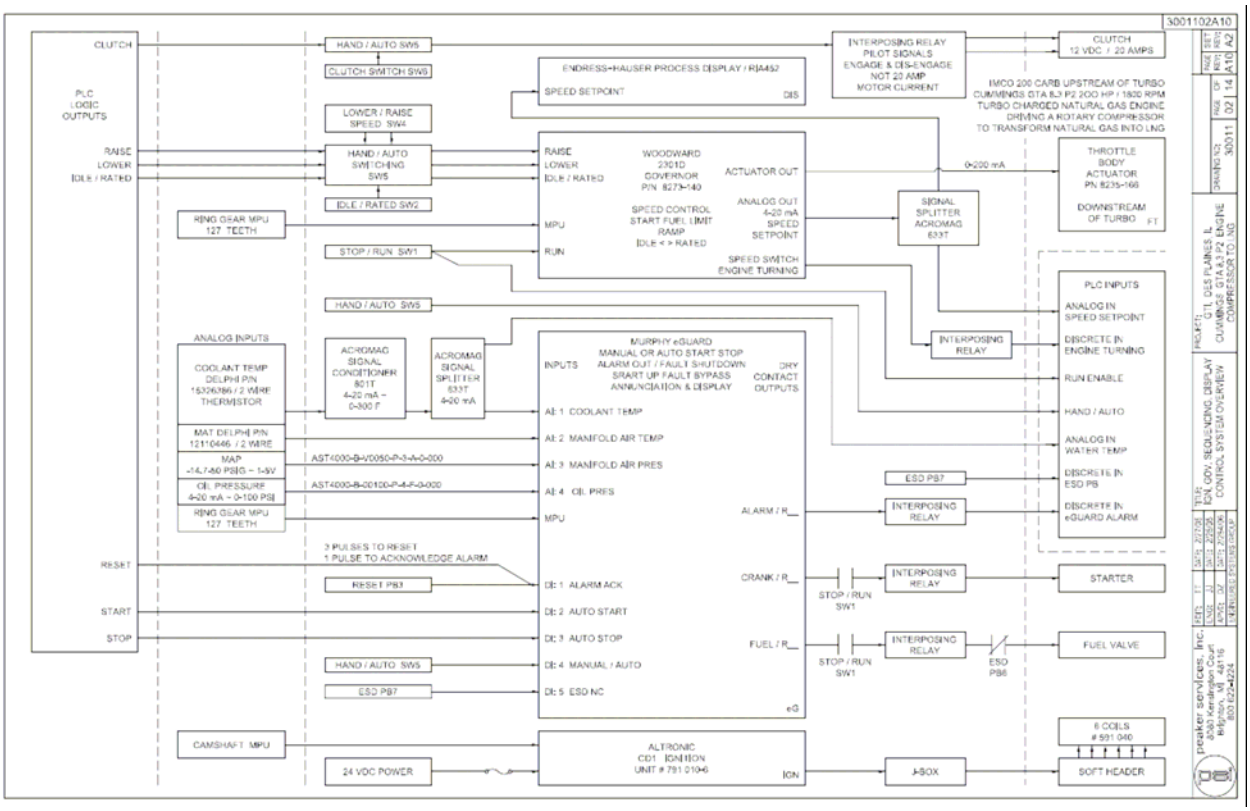

Figure 8: New Engine Control Schematic

Figure 9: Completed engine and master control panel assembly

Temperature Swing Adsorption Controls

The Temperature Swing Adsorption (TSA) subsystem is necessary to remove contaminants from natural gas supplies prior to entering the liquefier system. This process will be discussed in more detail later in this report. Major upgrades were made to enable the tri-tower temperature swing adsorption system to function in an automated fashion. This effort began by building a manifold assembly to enable the sequenced valve operation required to allow tri-tower operation. Figure 10 shows the basic natural gas flow in the tri-tower system. In this system, each tower is simultaneously operating in one of three modes: adsorption, heating (desorption), and cool down. These three unit operations will cycle between each of the three towers on a periodic basis (e.g., 4.3 hours in the example shown below). This is able to effect removal of carbon dioxide and water in the natural gas stream to prevent freezing problems in the liquefier.

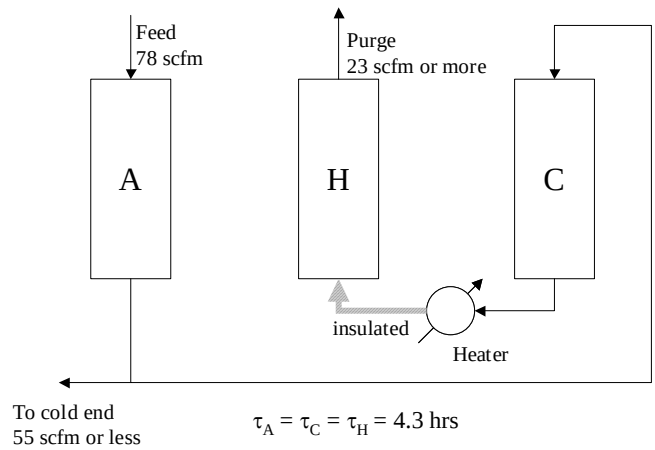

Figure 10: Series Cool-Heat Regeneration

Figure 11 shows a picture of the tri-tower TSA system with the installed manifold of air-actuated control valves. There are a total of 18 air-actuated valves that provide the time sequenced switching required for this system.

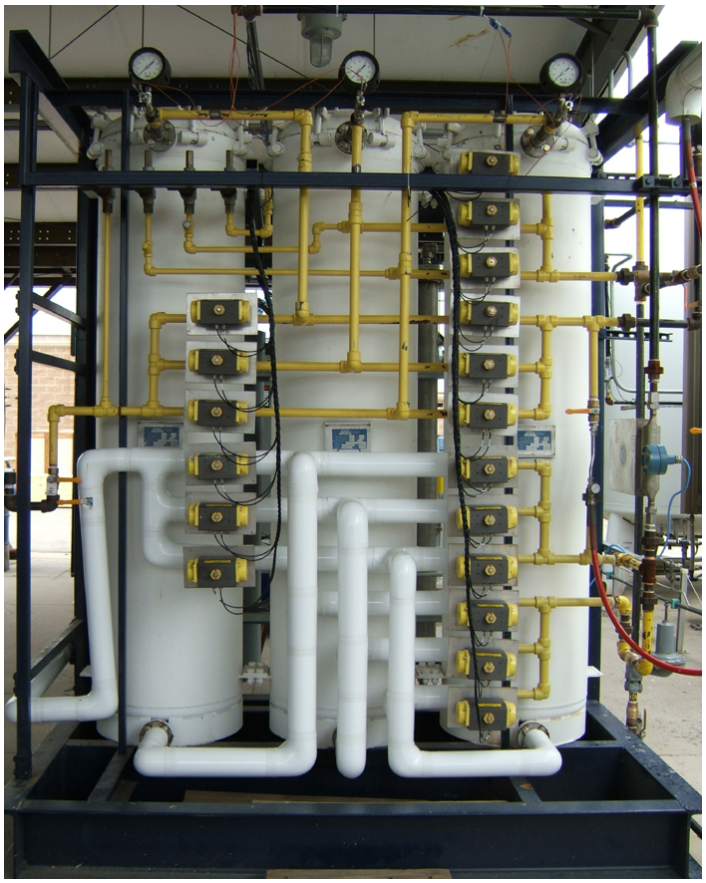

Figure 11: TSA System and Air-Actuated Control Valves

A feature of the TSA control system is an electric heater used to ensure adequate temperature is obtained to effect the TSA de-absorption cycle that results in removal of trapped carbon dioxide and water. Figure 12 shows a picture of the TSA heater and controller.

Figure12: TSA Regeneration Heater and Controller

Upgrades were also made for the screw compressor controls and actuators. Figure 13 shows a picture of the Hartford screw compressor (used to recompress the refrigerant mixture) as well as the new actuator (in red) installed to engage the engine clutch. This clutch assembly is needed to allow the natural gas engine to freely start without a load connected to the drive shaft.

Figure 13: Screw Compressor

Figure 14 shows pictures of the LNG product control valve (in yellow) and the cryogenic Coriolis mass flow meter used to provide real-time measurement of LNG production.

Figure14: Control Valve and Cryogenic Coriolis Meter

Figure 15 shows a picture of on-skid pressure gauges and an electrical box used to provide for data acquisition, monitoring, and control input/output.

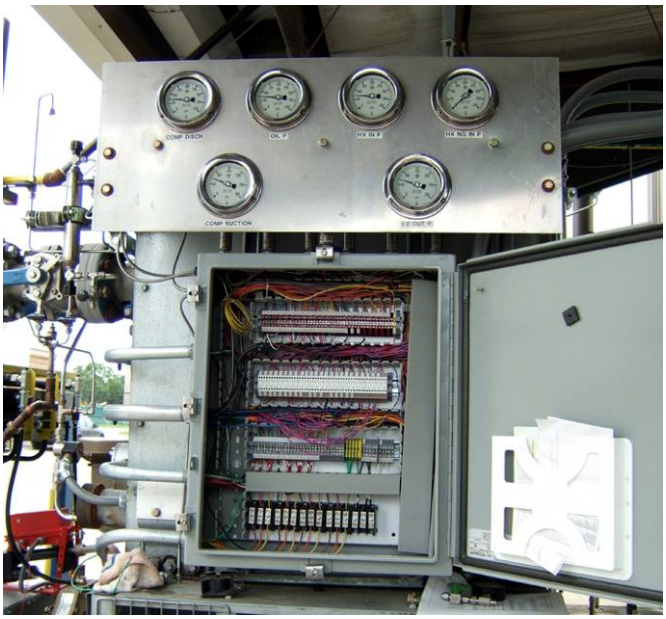

Figure 15: Manual Pressure Gauges and Control/Monitoring Inputs

Figure 16 shows an overall picture of the small-scale liquefier skid and its controls. The liquefier skid is very compact, with dimensions of approximately 8' by 14'. This is complemented by the gas clean-up system skid (approximately 5' by 8') that contains the desulfurization and TSA clean-up towers (shown previously in Figure 11).

Figure 16: Complete Small Scale Liquefier System

Gas Clean-up System Refinement

PROJECT TASK OVERVIEW

The second major task in this project was to make system refinements to the temperature swing adsorption (TSA) subsystem. These refinements allow the liquefier to operate in an unattended manner. GTI's small-scale natural gas liquefier is designed to enable conversion of natural gas into a liquid at much smaller scale than normally seen in commercial practice.

The process gas fed to the inlet of the refrigeration heat exchanger must be free of all water, carbon dioxide and sulfur. These elements will freeze in the refrigeration heat exchanger and eventually plug the process, resulting in equipment down-time and costly maintenance. The objective of this task was to efficiently remove these contaminants ahead of the refrigeration heat exchanger through an adsorption process and to automate the gas clean-up subsystem, including the regeneration of the adsorbent material. To accomplish this, GTI designed a Tri-Tower selective gas adsorbent system consisting of three towers containing an adsorbent material that selectively removes contaminants from the gas stream. GTI determined that three towers, going through a synchronized clean up and recharge cycle are the minimum required for an automated, continuous process.

- **Water and CO_2 Cleanup System Enhancement / Automation**

  The project upgraded the liquefier gas cleanup from an in-series configuration of three adsorption towers to a parallel configuration more conducive to continuous operation. In the parallel configuration, one tower provides the cleaned gas to the liquefier, one tower is regenerating the adsorbent material, and one tower is cooling from the regeneration process. The clean up system was configured (through piping and valves) so that a continuous supply of cleaned gas is delivered to the liquefier as the three towers autonomously cycle on a timed basis.

- **Clean-up tower valve train**

  In order to automate the clean-up process, the design of the Tri-Tower selective gas adsorbent system or clean-up system includes a gas delivery and control manifold that consists of an array of valves to properly direct the flow of gas through three vessels (towers) containing adsorbent material. This task consisted of the fabrication and installation of the valve train for the three tower parallel configuration. There are a total of 18 air-actuated valves that provide the time sequenced switching required for this system. The manifold also contains pressure relief valves, gas regulators, and a mass flow meter. The mass flow meter measures the gas delivered to the liquefier.

- **Regeneration cycle heat supply strategy**

  In order to regenerate the adsorbent material and remove contaminants that were captured in the adsorption cycle, it must be heated to a temperature above 600 ^{o} F. Originally, the project called for the regeneration heat to be provided from the exhaust system of the engine. During the course of the project, it was established that the fabrication of a gas-fired heating system would add at least six to nine months to the project timeline. Consequently, a commercially available, electric heater was incorporated into the system.

- **PLC Hardware and Logic**

In this task, the PLC hardware for valve signals was installed and programming was designed for the valve switching logic. The hardware and the software of the PLC control system were expanded to include the logic for the clean-up system. Additional relay output modules were installed to communicate with each of the valves. The control logic for the timing of each stage of the clean-up process was also programmed. The algorithm for this program was developed in parallel the system controls task. The hazards analysis is included in the Appendix.

- **Sulfur clean-up system**

  In this task, a sulfur clean-up device was integrated into the gas clean-up subsystem. Natural gas must be de-sulfurized before entering the liquefaction system. The clean-up towers may not completely remove sulfur, so a separate, desulphurization unit was integrated into the system, including both hardware and controls.

GAS CLEAN-UP SYSTEM CONTROL AND OPERATION

Natural Gas Sulfur, Water and Carbon Dioxide Removal

The removal of compounds such as hydrogen sulfide, odorants, carbon dioxide, and water are a necessary requirement in liquefaction because these compounds will turn to solids at cryogenic temperature conditions. One of the cost challenges on small-scale liquefaction is ensuring the cost and performance of this equipment is acceptable and reliable.

Natural gas can be made to convert from a gas to a liquid at temperatures ranging from –220°F to –260°F (depending on gas composition and pressure). Natural gas is not pure methane. The composition of natural gas is predominantly methane, with a number of decreasing heavy hydrocarbons and trace non-hydrocarbon species including nitrogen, carbon dioxide, and water. Some of these components will be partially or wholly soluble or insoluble in liquid at cryogenic conditions, resulting in a possible three-phase situation involving gaseous, liquid, and solid compounds (Figure 17).

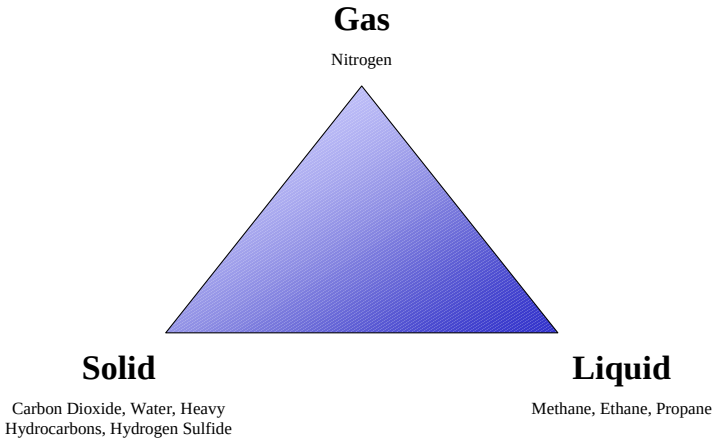

Figure 17: Natural Gas Phase Considerations

Insoluble compounds may remain as a gas (e.g., nitrogen) or may condense as solids (e.g., carbon dioxide, water, heavy hydrocarbons). To address these concerns, natural gas cleanup systems are needed to nearly completely remove certain key actors such as carbon dioxide, water, and hydrogen sulfide.

Table 1 provides a summary of typical pipeline natural gas compositions seen in the U.S.

Table 1: Typical Pipeline Natural Gas Composition.

Component	Mole %
Nitrogen	1.68%
Methane	93.81%
Ethane	3.5%
Propane	0.67%
i-butane	0.1%
n-butane	0.12%
i-pentane	0.04%
n-pentane	0.02%
n-hexane	0.06%
Aromatics (benzene, toluene etc.)	~1 ppm

Table 2 shows the nominal design basis for sizing of the desulphurization and TSA system for these key components.

Table 2: Key Contaminants in Design Basis

Contaminant	Level
CO_2 content: design level	1 mol %; maximum(*) = 2 mol%
Water content	4 -7 lb/MMscf = 140-200 ppmv
Typical sulfur	8 ppm including mercaptan odorant

(*) Reduced product flow

There are several methods that can be used to address these minor or trace constituents. The approach used in this system is a two-step process. The first addresses sulfur removal, followed by combined removal of carbon dioxide and water. Both of these employ the use of solid adsorbents, a proven approach in the area of natural gas liquefaction.

The GTI small-scale liquefier system relies on temperature swing adsorption (TSA) to remove carbon dioxide and water. In the tri-tower TSA scheme, three individual vessels are packed with adsorbent materials that selectively remove certain species. This is complemented by a separate sulfur removal column to trap hydrogen sulfide and odorants.

Natural Gas Desulphurization System and Materials

Typically, desulphurization can be accomplished by using either activated promoted carbon or zinc oxide. Previously, GTI used a product called NUSORB FC-3, an activated carbon impregnated with metal oxides. These were charged into three different columns during prior testing at GTI. Overall, this material provided suitable removal of sulfur compounds, achieving

purity levels below detectable limits with instruments used at the time (below 30 parts per billion).

To improve overall performance and ensure capture of a wide spectrum of odorants that can be found in natural gas, a new desulphurizer material system was used for this project. It is based on two newer sulfur adsorbent products from Sud-Chemie. A new single-tower desulphurization unit was built by GTI with a 1' diameter by 8' high column.

The Sűd-Chemie (SCI) ambient temperature desulphurization agents being used are designated FCDS-GS12 and FCDS-GS13. SCI recommends using a sequential bed configuration of GS12 on the inlet followed by GS13. DMS (dimethyl sulfide) and TBM (tertiary butyl mercaptan) are the main odorants present in the natural gas supply at GTI, while THT (thiopane), COS and H2S appear at varying but significantly lower levels. FCDS-GS12 is a zeolite-based adsorbent and demonstrates a higher capacity for DMS compared to activated carbon and other commercially available zeolitic adsorbents and it also has a good capacity for THT. Studies have shown DMS to be the most difficult odorant to remove from natural gas. FCDS-GS13 is a base metal type adsorbent and has shown good capacities for TBM and H2S. Although COS is even more difficult to remove than DMS, as it is typically present in lower concentrations than the odorants. GTI found that concentrations of COS were sufficiently removed by the GS13.

Tri-Tower Adsorbent System and Materials

The tri-tower selective gas adsorption process is desirable for this application because it permits continuous round-the-clock operation and is capable of achieving very high selectivity and removal performance for potential compounds that could form solids.

Figure 18 shows the basic logic for this type of system. In this graphic, the three towers are depicted over time, with the logic for the first time interval shown. In this design, the first interval is approximately 4 hours and the total cycle time is 12 hours. Note that the natural gas that ultimately goes to the natural gas prime mover is carrying a higher concentration of water and carbon dioxide and is consumed as fuel gas in the system. The logic for the subsequent two time sequences is similar, but shifted to begin with tower 2 and tower 3, respectively.

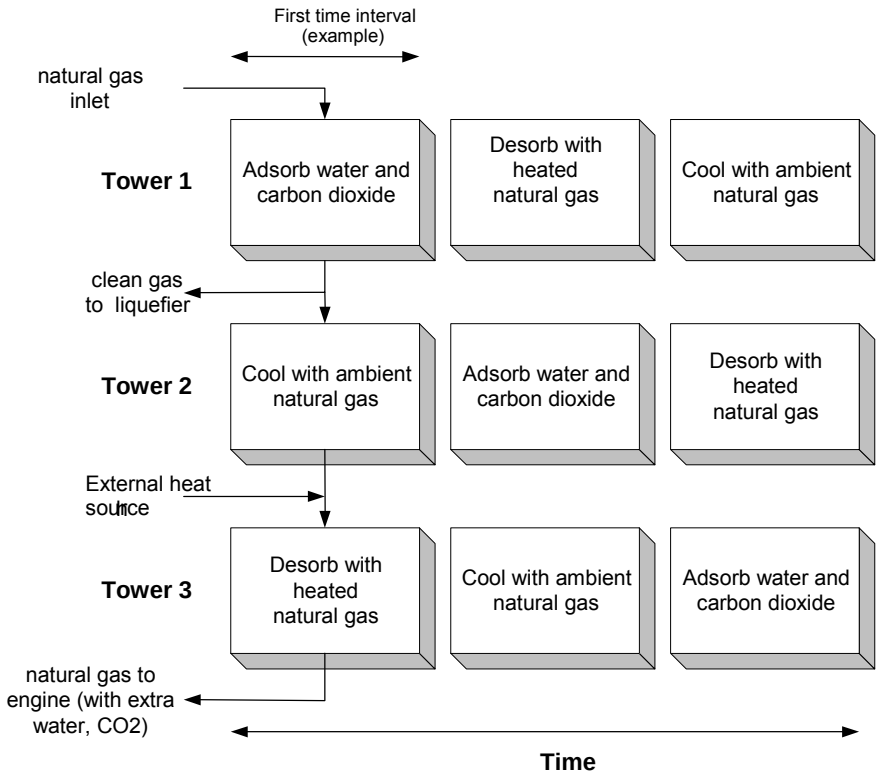

Figure 18: Operational Logic for Tri-Tower System

The specific process flow and gas volumes for the TSA system designed for the 1,000 gallon per day liquefier is shown in Figure 19. The feed gas volume of 78 scfm passes through the first tower (labeled A for adsorbing). The clean product gas from this tower is split, with 55 scfm of clean product gas going to the liquefier. The balance, 23 scfm, goes to the tower C (for cool down) and then to tower H (which is being heated to desorb trapped carbon dioxide and water). This gas then is cycled to the natural gas prime mover.

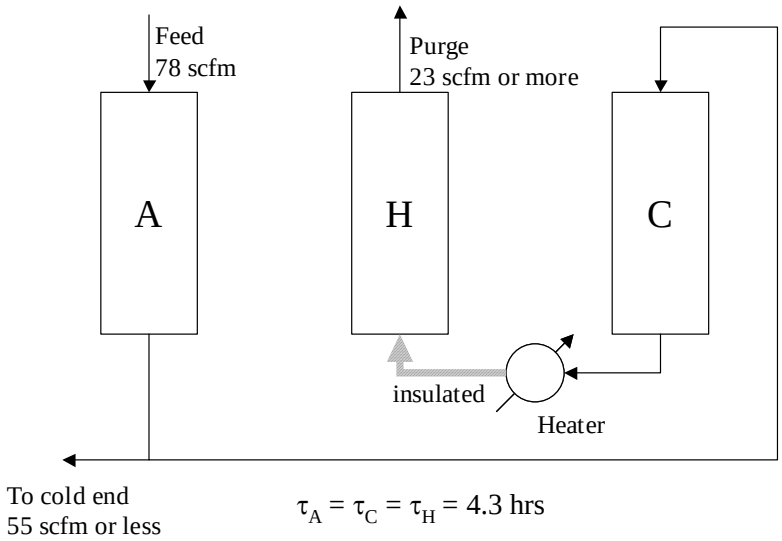

Figure 19: Series Cool-Heat Regeneration Scheme

A feature of the TSA control system is an electric heater used to ensure adequate temperature is obtained to effect the TSA desorption cycle that results in removal of trapped carbon dioxide and water. Figure 20 shows a picture of the TSA heater and controller. The heater is required to achieve gas temperatures in excess of 400°F to provide an effective removal of captured carbon dioxide and water – this is typically referred to as regeneration of the adsorbent materials.

At the beginning of the project, GTI considered using engine exhaust heat as the heating source for the adsorption tower recharging process. Operating costs were assumed to be lower, as the energy from the engine waste heat was "free". This plan was discarded for three reasons. First, the engine and the gas clean-up towers are on separate skids to facilitate easy transportation of the unit. Using the engine exhaust heat would greatly increase the cost of integration between the skids due to additional piping and insulation of the exhaust gases. Second, GTI determined that the energy from the engine waste heat would be insufficient to completely recharge the adsorbent towers, requiring the purchase of a supplemental heating system. Third, the cost to purchase and/or fabrication of a gas-fired heating system, with a heat exchanger exceeded the project budget, and the timing for installing such as system would exceed the time allotted for the project by at least six to nine months.

Consequently, GTI integrated an electric heating unit into the gas clean-up system as shown in Figure 21. The heater was custom made by Ash Equipment Company based on a Watlow heater and controls unit.

Figure 21: TSA Regeneration Heater and Controller

Natural Gas Liquefier
System Mechanical and Efficiency Enhancements

PROJECT TASK OVERVIEW

The third major task in this project was to enhance the system mechanical efficiency. The task implemented modifications that increased both the mechanical effectiveness and the energy efficiency of the system. Most of the activities in this task were conducted concurrently with other project tasks. Some of activities included cleaning and repainting system components as well as replacing a number of seals, sleeves, connectors, and electronic components. Specific upgrades included replacing and upgrading system components, such as the refrigerant oil cooler, the oil separator, the transmission cooler, the addition of process gas pre-cooling, and other system efficiency enhancements outlined in this section.

- **Install Larger Refrigerant Oil Cooler**

  GTI's prior experience with testing in warm weather resulted in the refrigerant oil cooler only achieving a 15 degree F temperature drop with both fans running. This was an insufficient level of cooling. Although GTI was able to enhance cooling with the addition of water flow over the heat exchanger, this is not a desirable method for field testing due to the need for supply water and drainage. Consequently, this task upgraded the refrigerant oil cooler. The oil cooler was designed to stay off until the oil got warm (120°F) then it would cycle off if it got cooler than 80°F.

- **Install a Larger Separator and Relocate Oil Sump**

  The system oil separator was thought to be undersized and an oil sump was used to aid in the separation process. This configuration resulted in a small loss of efficiency. In place of installing a larger separator to improve the system efficiency, an automated by-pass "dump" valve was incorporated into the system. By activating this solenoid valve on a scheduled frequency, oil collected in the separator sump is cycled back to the refrigerant compressor (its source). This proved to be a satisfactory solution to the inefficient separation experienced earlier.

- **Install Transmission Cooler**

  In prior testing, the engine prime mover's transmission oil temperature exceeded the manufacturer's specification during warm weather testing. GTI obtained an oil cooler from the manufacturer of the transmission that attached to the existing transmission. This activity procured and installed the transmission oil cooler and eliminated the warm weather operational concerns.

- **Add Inlet Process Gas Pre-Cool**

  Pre-cooling of the process inlet gas to the main heat exchange was required due the temperature swings seen from the TSA. When the towers would switch cycles the gas

temperatures entering into the liquefier heat exchanger would fluctuate. GTI added a cooling coil on top of the BAC to aid in the ambient cooling to the product gas. Gas would circulate through the coil prior to entering the primary heat exchanger and would "pre-cool", thereby increasing system efficiency.

System Mechanical and Efficiency Hardware Upgrades

During this program, a series of system upgrades were made to this unit to:

- Improve system controls for automated operation
- Increase system reliability
- Increase system output
- Increase overall system efficiency

This section provides an overview of the system mecahnical modifications made to address automated operation, LNG production, and efficiency. There were a variety of system upgrades that were made by GTI to enable the liquefier to operate more efficiently. Following is a pictorial overview of the installed equipment.

Figure 22 shows an overhead schematic of the small-scale natural gas liquefier. The piping system shown here includes lines for refrigerant flow to and from the compressor to the main heat exchanger and back to the compressor as well as lines for compressor lubricating oil recovery and cooling. The compressor cooling oil was an area of focus in this program due to prior testing that showed oil temperature to be a limit in terms of LNG production capability.

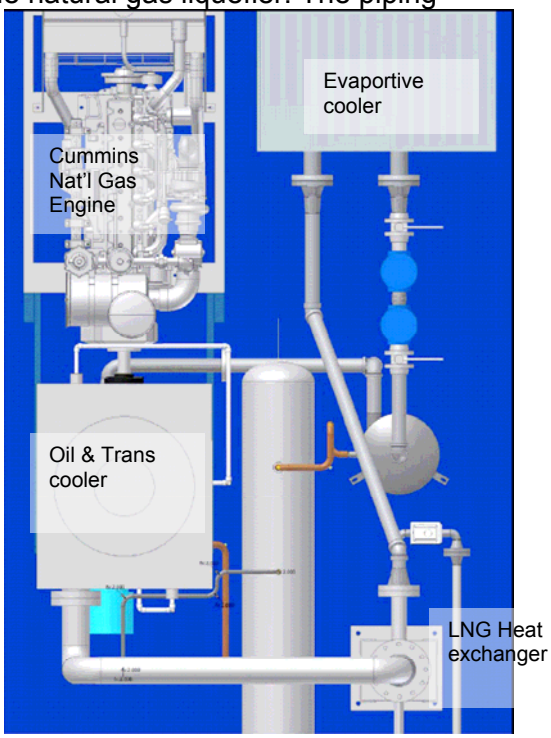

Figure 22: Schematic of Natural Gas Liquefier

Figure 23 shows a schematic of the compressor lubricating oil flow loop. This circuit was completely overhauled by GTI with new piping and valves and – most importantly – an improved compressor oil cooler. This was an essential new system component to allow the liquefier system to increase output and to be able to effectively operate in warmer climates such as Texas.

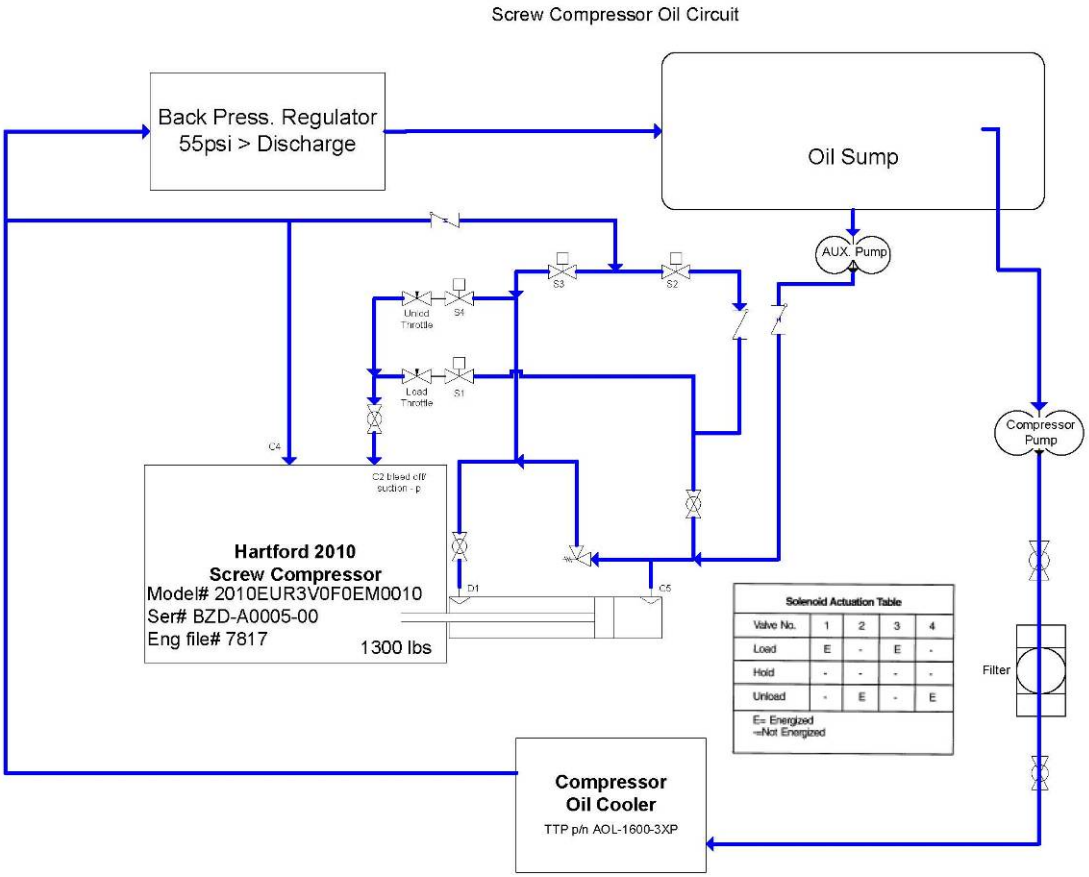

Figure 23:Compressor Refrigerant and Lubricating Oil Loop

Figure 24 shows pictures of the revised piping loop for the refrigerant and lubricating oil cooling system. Shown on the right are new coalescing filters used to ensure high removal efficiency for oil (necessary to avoiding oil contamination of the cryogenic heat exchanger).

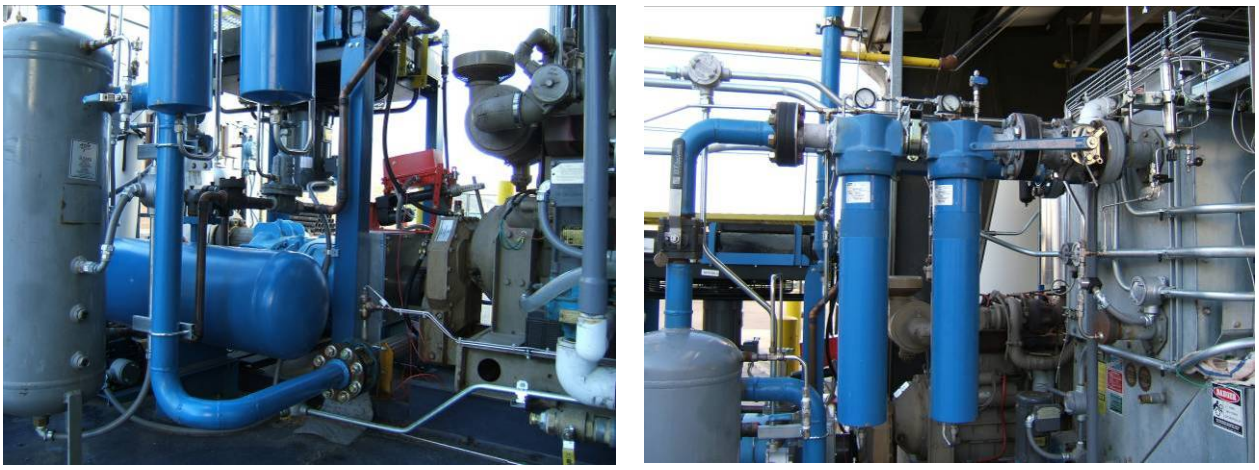

Figure 24: Revised Refrigerant and Lubricating Oil Cooling Piping

Figure 25 shows a picture of the new compressor lubricating oil cooler. This new component is vitally important due to the high temperatures experienced during heavy refrigerant load operation – especially in warmer climates such as Texas. The new unit will allow the small-scale liquefier to increase output and to operate effectively at higher ambient temperatures.

Figure 25: New Compressor Lubricating Oil Cooler

Figure 26 shows a schematic of a new lubricating oil recovery, separator, and pump control scheme implemented in this program. Figure 27 shows the screw compressor with the revised bypass solenoid controls (lower middle of picture).

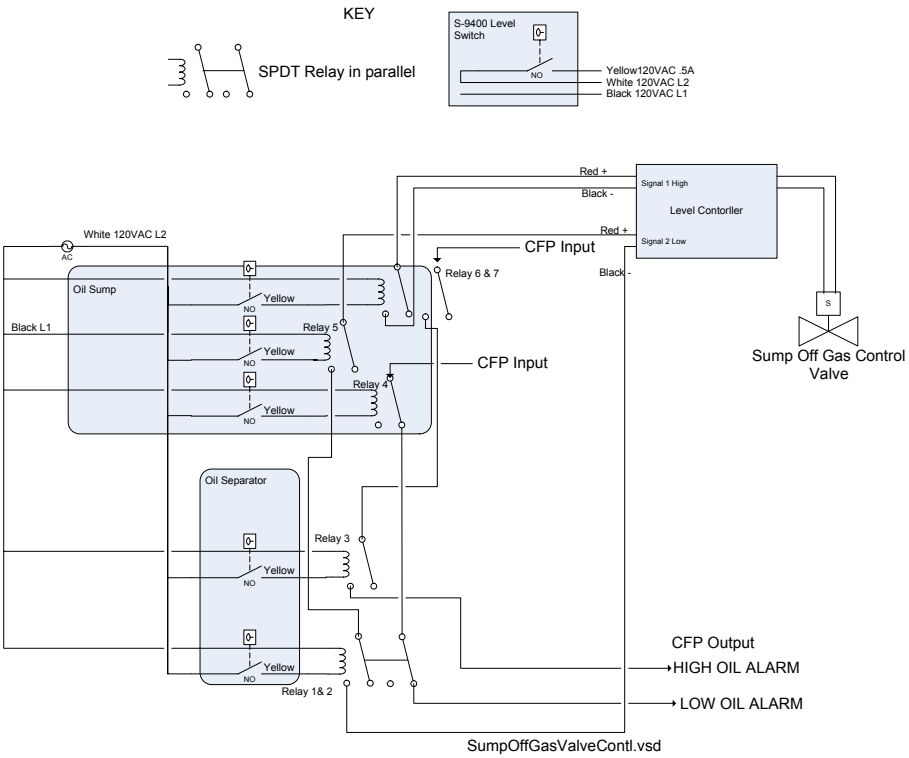

Figure 26: Lubricating Oil Separator and Sump Control

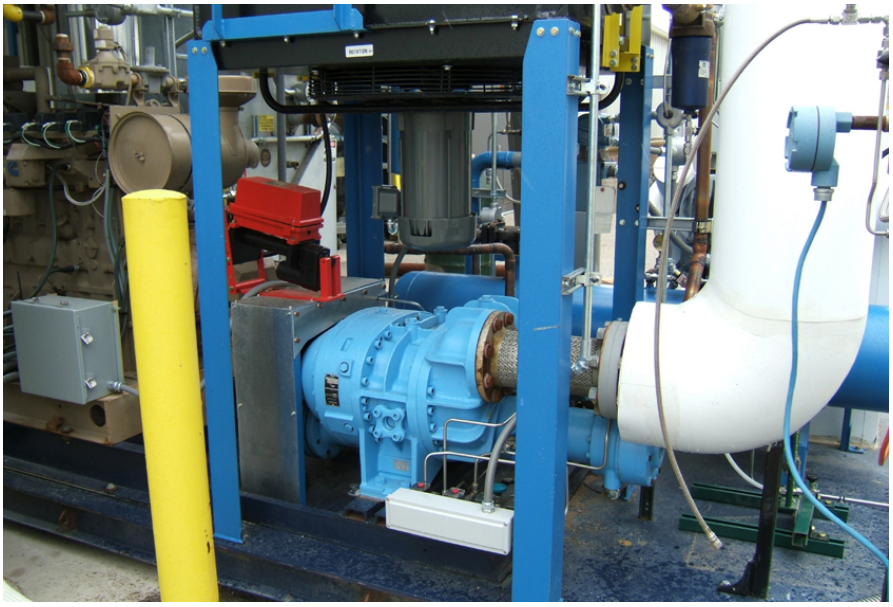

Figure 27: Screw Compressor and Controls

During the program, and in work with GTI's commercialization partner, a decision was made to alter the lubricating oil selection to a synthetic oil type that would exhibit reduced absorption of certain refrigerant compounds. In prior testing by GTI, relatively significant quantities of some of the multi-component refrigerant compounds were found to be soluble with the lubricating oil. It was decided that an alternative compressor oil lubricant would reduce the amount of refrigerant in the system and avoid potential dilution problems. This new lubricant was charged into the revised refrigerant and lubricating oil piping system.

One of the steps required to help automate the operation of the liquefier system was the installation of a drive mechanism to engage the clutch that helps to transfer power from the engine prime mover to the compressor. The clutch allows the engine to be started without any load and to come up to operating temperature before engaging the compressor. Previously, a manual clutch mechanism was used. This was replaced with a piston-driven device that allows the clutch to be automatically engaged and disengaged as needed. Figure 28 shows a picture of this drive mechanism.

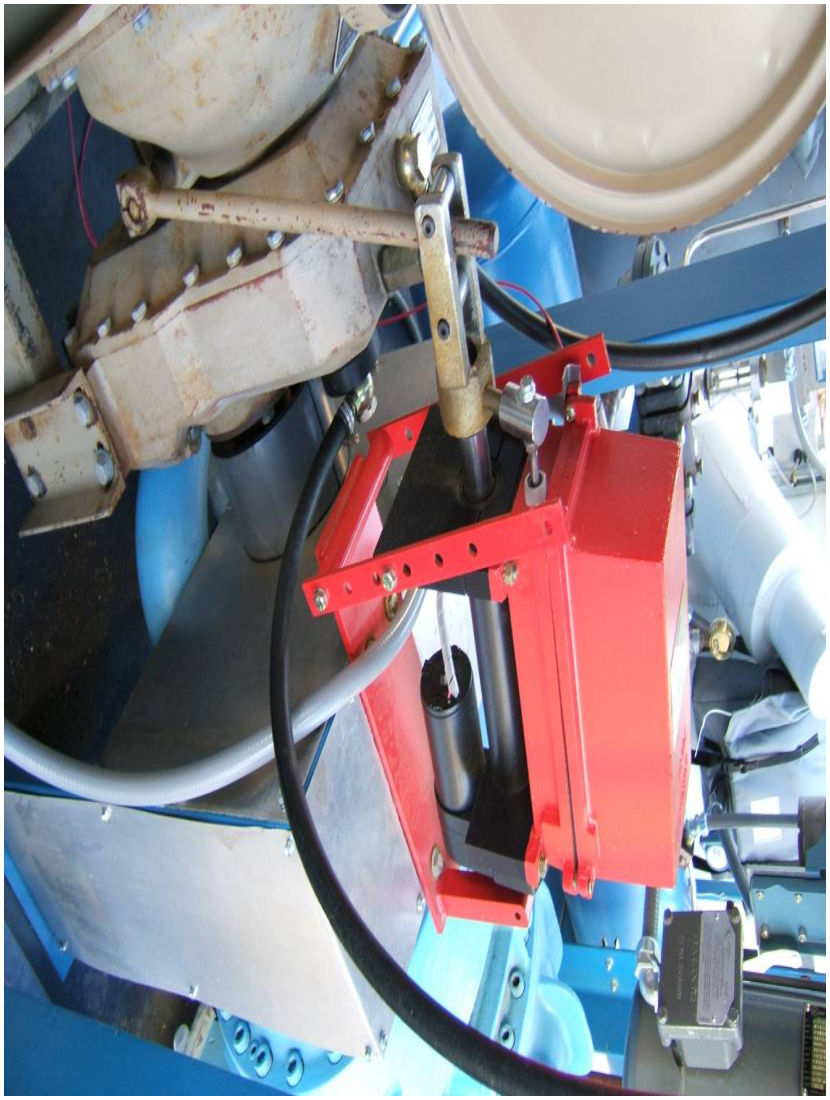

Figure 28: Automatic Drive for Engine Clutch

Another area of major system modifications was the installation of a natural gas recovery system that allows the gas clean-up system tail gas and any vaporized LNG from production or storage to be used to power the prime mover. Figure 29 and Figure 30 show a schematic of this system and a picture of some of the installed components.

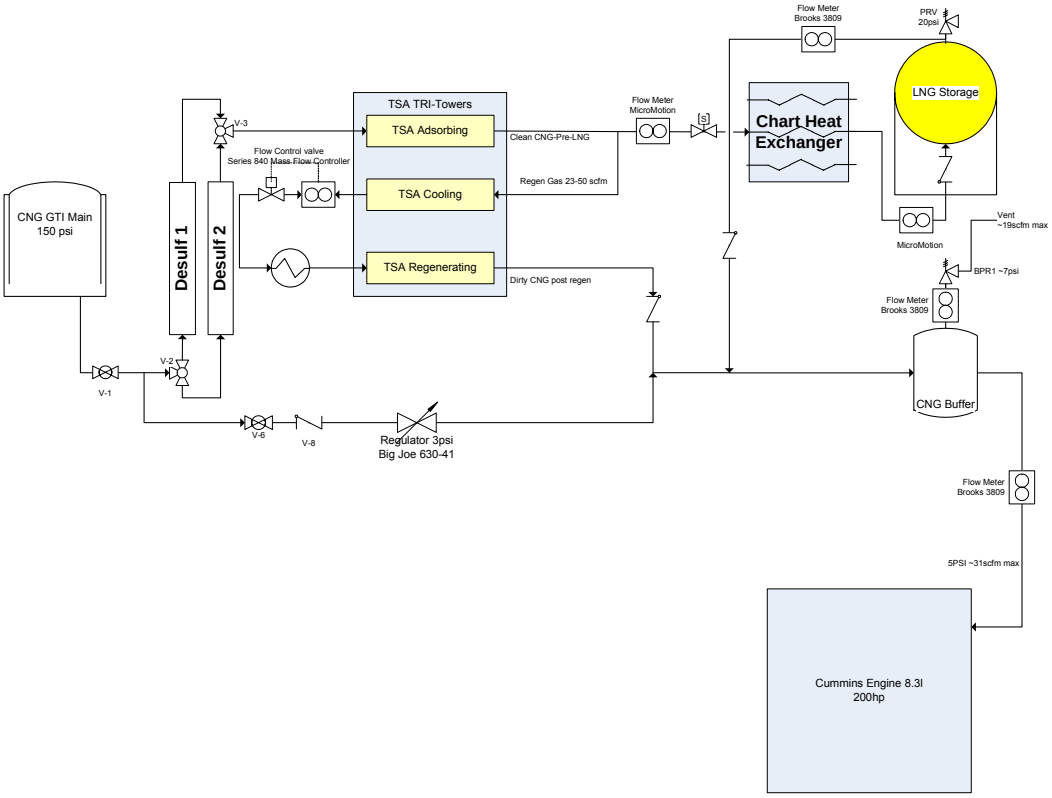

Figure 29: Natural Gas Flows to Prime Mover

Figure 30: Natural Gas Buffer Tank and Piping

Another area for system improvement was the installation of a cryogenic product meter on the outlet of the liquefier. Previous testing had used a measurement approach based on measuring the build-up of LNG in an onsite storage container. This required extended run times to measure performance at different operating conditions. During this program, a cryogenic mass flow meter from MicroMotion was installed on the system to provide real-time measurement of LNG production. Figure 31 shows a picture of this new instrumentation.

Figure 31: LNG Product Transmitter (left) and Meter (right)

Natural Gas Liquefier
System Optimization, Verification, and Field Test

PROJECT TASK OVERVIEW

System Optimization and Verification

Reporting on the fourth and fifth tasks in this project are combined in this section. System optimization and verification was conducted simultaneously with the field test of the equipment conducted at GTI. Once the system enhancements in the previous three tasks were implemented, the liquefier system and all subsystems and components were tested to assure that the overall system performance is optimal. Verification and optimization tests included:

- Verifying control algorithm performance to assure that the system reacts appropriately to potential problems.
- Testing and refining the initial refrigerant charging process to allow for optimal charging procedure for the field demonstration.
- Testing the remote data acquisition equipment and software to assure field readiness.
- Running endurance testing of the complete package to ensure the full function of the system, in preparation for a field demonstration.

The following provides details on each of the tests performed:

- **Control Algorithm Validation and Operational Performance**

  Upon completion of control hardware installation and PLC programming, the control algorithm validation and operational performance was evaluated. Errors were induced into the system and the operation of the control system was verified. The control system was tested on its ability to recover from an error input by making the adjustments defined in the hazards analysis (See Appendix, Attachment A). The safety shut down sequence was also verified in the event that the system could not recover from a process variable spike.

- **Test and Refine Refrigerant Charging Process**

  This activity included the development of a filling procedure that will allow for initial charging of the system as well as procedures for making refrigerant composition adjustments to improve the system performance. A spreadsheet calculation sheet was developed to predict the impact of the addition of any of the refrigerant components to the multi-refrigerant mix. This proved to be a valuable tool when modifications to the charge were required over the course of the field test. The necessary adjustments were made according to system variables recorded by the data acquisition system.

- **Test Data Acquisition Hardware and Software Performance**

  A remote data acquisition system was installed on the liquefier. The data acquisition system logged key process variables. This system was monitored remotely to record the necessary efficiency data and system performance during the field test.

- **Run Endurance Tests on the Entire System (Pre-Field Test)**

This pre-field test verification was planned as an activity that would occur prior to shipping the unit to a remote field location for the endurance test. Since the test site was eventually determined to be GTI's test location at its Des Plaines, Illinois lab facilities, this activity was combined with the field test. Prior to operating the system as part of the field test (which included delivering product to a series of fuel tanker trucks), the system was operated in order to verify the cycle time of the clean-up system and to validate the system controls and the correct start/stop operation of the liquefier based upon the LNG level measurements in the GTI storage tank.

Natural Gas Liquefier Field Test Overview

GTI teamed with Clean Energy Inc. to perform the field test operation. GTI simulated remote conditions at its lab facilities in Des Plaines, producing LNG for three, 10,000-gallon tanker trucks operated by Clean Energy. Clean Energy, in turn, redelivered the LNG to its fuel customers. GTI operated the system for thirty-two days over a period of three months, using production pauses to make system modifications, verify controls, collect data, and assess the overall system operation. It took approximately ten days of production to fill each tanker.

The original test site for this project was identified as Houston, Texas. GTI's original test site partner however was unable to accommodate the on-site liquefier system, requiring GTI to locate another test site host. GTI contacted each of the major LNG fleet operators in Texas with varying responses with respect to being a field-testing host. Those discussions consumed significant project time but did not result in the in-kind resources and commitment required for a successful field test. While there is significant interest in utilizing this technology once it has become commercial, LNG fleet operators pointed to the potential for disruption in their existing operations to install this system for a limited 3-month field test.

It eventually become apparent to GTI that even if agreement could be reached with an alternative, in-state field test host, that 1) the timing for the project would be significantly delayed, and 2) costs for the project would be significantly increased. Therefore, GTI recommended and gained approval for an alternative path for completion that provided a better solution for Texas LNG fleet operators than contemplated by the original project. For purposes of this project, having the test occur at GTI's Des Plaines facility represented a superior alternative for TCEQ compared to the original project for the following reasons:

- The system was operated under field-test conditions in a manner that replicated on-site conditions at an LNG fleet operator's site.
- The project was not significantly delayed beyond the original project time frame, allowing the technology to become more quickly available to Texas-based LNG fleet operators.
- There were no disruptions for LNG fleet operators, who would have been faced with the issue of integrating a temporary LNG supply system into their operations before making a commercial decision regarding the purchase of this technology.
- The field test solution did not disrupt existing customer and contract relationships between LNG fleet operators and their LNG supplier. By including Clean Energy as a project participant, it exposes the technology to another; large, Texas-based provider of clean fuels and facilitates a smoother project with greater potential for commercial success.

Specific activities that were performed as part of the field test included the following:

- **Permitting and insurance**

  Part of any technology deployment and field test includes the acquisition of necessary permitting and insurance documents. As GTI has existing permits for equipment operation at its Des Plaines lab, proof of liability insurance was the primary regulatory documentation that was required in this project.

- **Site preparation**

  GTI prepared its facility to accommodate the demonstration equipment field test. The following site preparation activities were performed:

  - A natural gas line was installed
  - An LNG collection tank was installed
  - A tanker truck collection are was cleared
  - Dispensing equipment that dispenses LNG from GTI's collection tank to Clean Energy's transport trucks was installed
  - Existing utility connections were modified to accommodate the test configuration
  - Temporary barricades and physical protection with appropriate signage was installed per safety codes

- **Initial refrigerant charge**

  The refrigerant system was charged with GTI's patented mixed-refrigerant and the liquefier system was tested for leaks prior to the first production run.

- **Remote data acquisition**

  The PLC was designed to gather data for a software program called Labview (See Appendix, Attachment C). The controls hardware was based on a National Instruments CFP2020 PLC unit. The data may be collected via telephone, cable, or satellite connection. The PLC data included all controls and mechanical systems, valves, and meters on the system. Modifications were made to the National Instruments PLC shown in Figure 33. LNG product quality was determined by batch tests that were performed by GTI's gas testing lab.

Figure 33: National Instruments CFP2020 PLC unit was modified to provide remote data acquisition and system control.

- **Liquefier system production test**

  LNG was produced by the system while monitoring all component subsystems. A three month formal test was completed in which the LNG produced was delivered into tanker trunks owned and operated by Clean Energy Inc. Clean Energy then redelivered the LNG to its customers as a vehicle fuel. No additional treatment or modification of the LNG was needed or performed by Clean Energy prior to redelivery of the fuel. During the test, GTI and its commercialization partner, BOC Inc., conducted site tours for officials from interested LNG fleet operations.

System Optimization, Verification, and Field Test Discussion

This section discusses the test procedures and results of the system optimization; verification and field-testing of the liquefier system during its automated operation. Following is a pictorial and graphical overview of the test location, equipment, and results. More detailed test results will be found in the Appendix.

Figure 34: GTI's LNG for Transportation Systems Lab

Figure 34 shows GTI's natural gas liquefier test facility. Note that this photo shows portions of the liquefier system equipment and test area prior to the project upgrades. The white horizontal tank is the LNG buffer storage tank. The large vertical tank is GTI's liquid nitrogen tank (not part of this project demonstration).

During a three-month test, full annual ambient conditions cannot obviously be replicated. The test period lasted from late September 2006 through early January 2007. Ambient temperatures during this period ranged from 72 degrees F to 4 degrees F. The range was sufficient to allow GTI to operate the liquefier system with and without the engine oil cooler.

It is important to consider that the primary purpose of the field test was to verify the mechanical configuration of the system for autonomous operation and to verify the refrigerant mixture. Consequently, GTI did not, in this test, collect detailed records for the energy balance of the

system. Another reason for this is that GTI does not expect the 1,000-gallon per day, demo-sized system to be commercialized. Rather, the operation of this system was used to help design higher-volume systems, ranging from about 10,000 gallons per day and higher that are expected to be commercialized.

Table 3 shows the gas stream components before and after liquefaction. The "Base Gas Stream" sample represents gas that enters the liquefier system from GTI's local distribution system supply.

Table 3

Liquefier System Gas Analysis (before and after liquefaction)

	Base Gas Stream (GTI Local Supplier)		**Tanker Sample November 9, 2006**		**Tanker Sample * December 27, 2006**	
Component	**Mol %**	**Weight %**	**Mol %**	**Weight %**	**Mol %**	**Weight %**
Helium						
Hydrogen			0.1%	0.1%		
Carbon Dioxide	1.21%	3.08%				
Oxygen/Argon	0.04%	0.08%	0.03%	0.07%		
Nitrogen	2.45%	3.98%	2.62%	4.4%	0.03%	0.05%
Methane	93.1%	86.7%	95.2%	91.6%	91.9%	84.7%
Ethane	2.63%	4.58%	1.92%	3.46%	7.32%	12.6%
Propane	0.3555%	0.907%	0.026%	0.07%	0.18%	0.45%
i-Butane	0.048%	0.162%	0.026%	0.092%	0.258%	0.860%
n-Butane	0.063%	0.212%			0.002%	0.007%
i-Pentane	0.021%	0.090%	0.021%	0.092%	0.184%	0.762%
n-Pentane	0.017%	0.071%				
Neo-Pentane					0.007%	0.029%
Hexane Plus	0.034%	0.170%	0.036%	0.184%	0.103%	0.511%
Hydrogen Sulfide						
Carbonyl Sulfide	N.A.	N.A.				
Temp = 60 F						
Press (PSIA) 14.7						

*Note: There were numerous production pauses while filling the third tanker, resulting in product venting and a gradual drop in the concentration of methane and increase in concentration of heavier gases as a percentage of the LNG. An analysis of the evaporative gas or vented gas from the tanker truck showed that 99.2% of vented product was methane.

Figure 35 shows the Clean Energy LNG tanker at GTI's Natural Gas Transportation lab facility prior to loading LNG. Note that the liquefier system is at the rear of the trailer. Figure 36 shows the connectors for LNG loading and unloading.

Figure 35: Clean Energy 10,000 gallon LNG Tanker

Figure 36: Rear panel to Clean Energy LNG Tanker where LNG is delivered into the tanker

Figure 37 shows the completed Natural gas liquefier system prior to the field test. The heat exchanger is shown at the forefront. The small white horizontal tank behind and to the left of the insulated suction compressor line is the LNG buffer storage tank, where LNG may be stored on an interim basis prior to delivery into a tanker.

During the field test, GTI was dependent on Clean Energy's tanker schedule. Consequently, production runs could last no longer than the time required to fill a tanker (approximately ten days).

Figure 37: Natural gas liquefier system at GTI's natural gas transportation lab in Des Plaines, IL

Safety and Auto shutdown

A key design parameter of the automated liquefaction system is the ability to shut down automatically if certain trigger points are reached. These trigger points were built into the controls software and were based on either alarm issues or management control. The triggers or system limits that were programmed are:

- Oil temperature (shall not exceed 220 degrees F per manufacturer's specifications)
- Compressor discharge pressure (shall not exceed 300 psig or be less than 60 psig)
- Expansion valve position
- Compressor slide valve position

Also considered were combination contingencies. For example, the compressor discharge pressure or the oil temperature might not have to reach peak levels to necessitate a system auto shutdown if certain other variables were in place, such as an expansion valve that was almost completely open.

LNG Production Optimization

The LNG product density set point controls the Z-valve to maximize LNG production. When the Z-valve was completely open and LNG flow was slower than expected,it was suspected there was a CO_2 blockage. To resolve this situation, controller was programmed to close the Z-valve when product density was greater than the set point. The valve rapidly closes when the trigger point is reached. As the Z-valve re-opens CO_2 plugs are cleared and pre-LNG flow returns to normal, thereby maintaining system LNG production.

Inducing errors in the system

Figure 38 shows an example screen from Labview, the liquefier system monitoring software. In the bottom left corner of the screen, alarms can be seen. The green indicators are the alarm trigger indicators, which turn red when an alarm has been reached. The alarm status needs to be on for more than 30 seconds to commence auto shutdown. The 30 seconds is to avoid false shutdown and to log the error. The basic shutdown procedure is to unload the compressor slide by ramping down the power to 10% of maximum load. Then all drain valves and the expansion valve open to help equalize pressure and prevent damage to the compressor.

GTI tested the shutdown procedures by replicating alarm situations. The system shut down as designed.[6]

[6] The system was shut down by an "unforced error" once during the test run. The heater unit on the TSA exceeded design temperature due to a controller malfunction and the system went through the auto shutdown process. The controller was repaired and the system operation was restored.

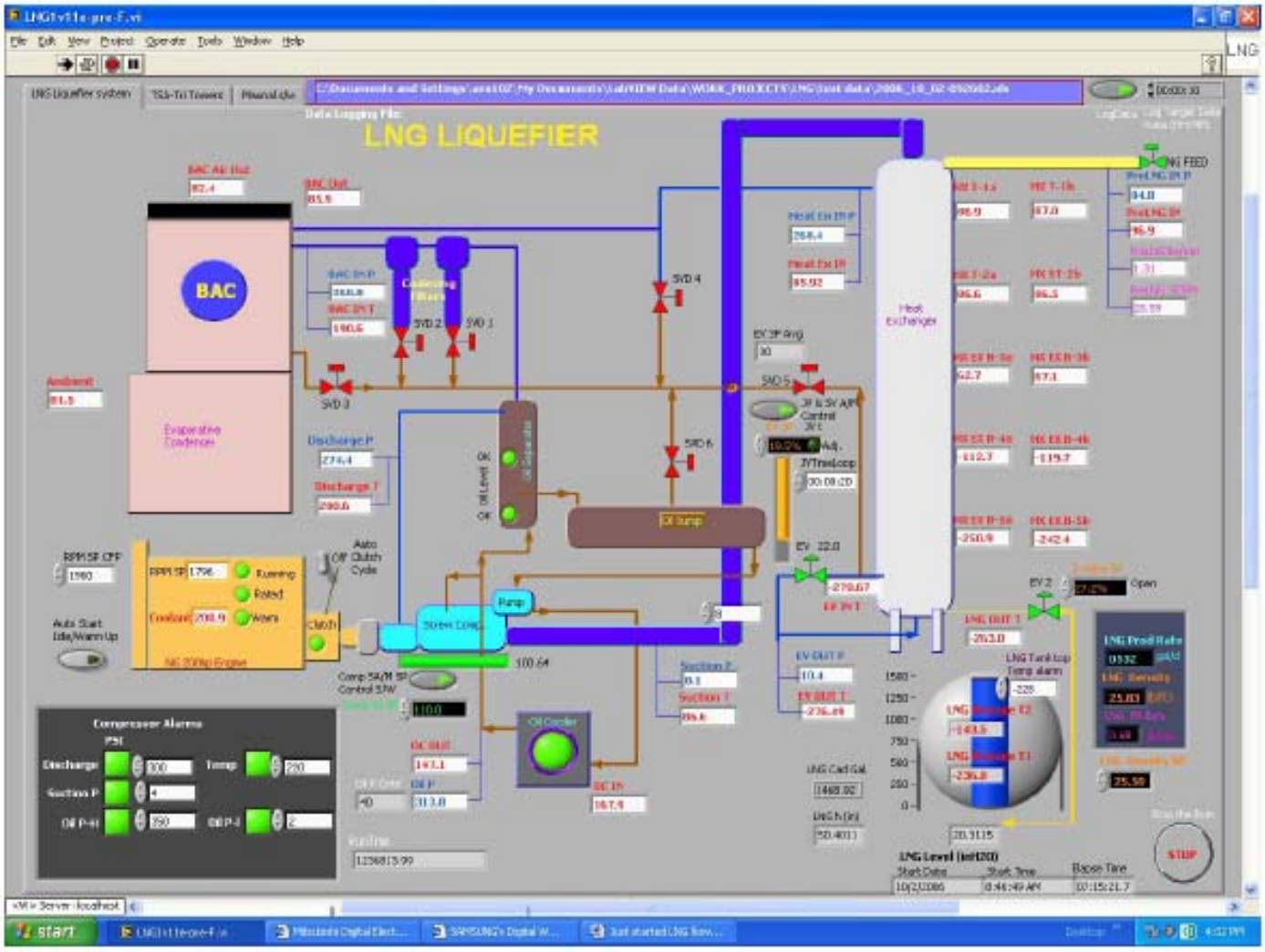

Figure 38: Labview software "screen dump". Alarm indicators (now green) are in the lower left corner and turn red when alarm conditions occur.

Mixed refrigerant fill procedure

At TCEQ's request, GTI will provide a detailed refrigerant fill procedure under the terms of the confidential document handling procedures. Initial filling is an iterative process consisting of three basic procedures:

- First, the system is evacuated by a vacuum pump to remove all existing gas contaminants.
- The mix refrigerants are gradually added, with the addition of the heavier gases first in order to build pressure in the system.
- Gas chromatograph samples are continuously taken during the filling process so that the mix of refrigerant gases can be adjusted.

The system was designed with a gas chromatograph sample port that is a tee off of the closed loop that goes directly to the suction line of the compressor. All gases in the mixture were added into the suction line of the compressor. Liquids in the mixture were added via the oil separator. Continuous gas chromatograph (GC) readings are taken in one-hour intervals. Since GC measurement is a "batch" process, a reliable, consistent method for collecting samples had to be designed. GTI developed a procedure whereby a double-ended vessel was attached to the suction side of the compressor, allowing warm gas to flow through the collection vessel, providing for a well-mixed, reliable GC reading.

Key system variables logged by the data acquisition system

The on-site liquefier is a complex, integrated system with multiple subsystems, each with important components. While the data acquisition system monitors essentially all variables, over the course of the project GTI identified the key variables that impact system performance and reliability. They are:

- Compressor discharge pressure and temperature
- Compressor suction pressure
- Compressor oil pressure and temperature
- Compressor slide valve position
- Expansion valve position
- LNG product temperature
- Engine RPM
- Engine coolant and oil pressure
- Pressure at BAC
- All expansion valves
- Heat exchanger profile

Field Test Procedure and Discussion

GTI's field test partners were BOC Inc. and Clean Energy Inc. Clean Energy provided tanker trucks for onloading the LNG product and BOC assisted in the review and analysis of test results. BOC also provided project funding and licensed the technology for commercialization. The field test began on October 9, 2006 and ended on January 10, 2007.

- First Tanker

  The first tanker arrived at GTI on 10-9-06, empty and warm. Initially, the field test used an intermediate LNG storage vessel. LNG was stored and then dispensed into the tanker truck. This, however proved to be inefficient, with excessive boil-off of the LNG in the transfer from the liquefier to the intermediate storage, and then to the tanker truck (over 50% of product was lost). This is also not a representative storage configuration for fleet applications. In a fleet application, LNG would go directly from the on-site storage tank into the vehicle fuel tank.

  After determining that the intermediate storage tank configuration was not efficient, GTI delivered LNG product directly from the liquefier system into the tanker truck. Including product delivered from the intermediate storage configuration, GTI delivered approximately 10,000 gallons to the tanker in 13 days. Filling was completed on 10-22-06.

- Second Tanker

  A second tanker truck arrived at GTI on 10-27-06. This tanker had 1 inch of LNG product in it when it arrived at GTI (less than 20 gallons). This fill went very smoothly, with the tanker fill being completed on 11-8-06 with 10,000 gallons of LNG, for a total of 10 days.

- Third Tanker

  The third and final tanker truck arrived on 11-20-06. Because this was the last tanker, several pauses were made during filling to recalibrate and optimize the system operation. Between operating periods, LNG would vent from the tanker, resulting in the tanker never being more than one-third full (3,400 gallons on 11-27-06) during the fill period. The system operated intermittently until 1-10-07 when the tanker had to be picked up by Clean Energy. It contained about 1,000 gallons of LNG when it left GTI's facility.

Field Test Metrics

- Total run time and daily metrics are shown in Appendix, Attachment E
- The system operated for a total of 32 days, over a period of 92 days of testing.
- The average daily production rate of the system was 1,095 gallons (delivered to the tanker and/or intermediate storage tank).
- Total production over the test period was 31,753 gallons of LNG.
- LNG quality consistently remained over 95% methane, well within engine manufacturer's specifications.

System Energy Balance			
Operating Parameters	**Units**	**Peak/Optimum**	**Average**
Liquefier Capacity	Gal /Day	1500	1095
Drive Power	hp	200	195
Gas Cost	$/mmbtu	$2.66	2.66
Drive Efficiency		28.5%	28.5%
Gas Heating Value	Btu/scf	1020	1020
Drive gas consumption	Scfd	57600	50400
System losses	scfd	25920	37440
TSA Power	kW	9600	9600
System efficiency	MBTU/d in – MBTU/d out	85.2	89.6

Problems encountered during Field Test		
Problem	**Discussion**	**Fix**
Compressor oil separator did not sufficiently extract oil from the gas stream prior to entering the heat exchanger, causing oil contamination in the heat exchanger.	This is a problem because oil in the heat exchanger can get trapped and freeze up expansion valves. Oil contamination in the heat exchanger was the single biggest cause of down time in the system	Evacuate refrigerant from the closed loop heat exchanger, then pressurize the heat exchanger with nitrogen and blow down until oil is removed (this process was very time consuming) An alternate fix was to pressurize the heat exchanger then rapidly depressurize to create a differential and blow out the engine oil
Compressor cylinder solenoid valves control position of the compressor slide. The valves alternatively supply and drain oil during compressor operation. Valves malfunctioned and remained partially open.	This caused the compressor to slow without being directed to by the controller	The valves were reconfigured and logic was added to the control program.
LNG would begin to taper off due to faulty Z-valve in the closed loop operation and due to faulty solenoid valve	LNG production dropped	Valves were replaced
Heater over temperature occasionally tripped as flow cycled from one of the TSA towers to the next	The system operated at about 610 degrees F (trip point is 725 degrees F). Apparently there was a short-term spike in gas temperature during the regenerative process	Automatic reset will re-start the system and avoid shut-down
Low compressor / Oil Pressure	The system apparently had a bad backpressure regulator.	Rebuild the regulator and add a bypass circuit.
Excessive product loss from boil-off during field testing	The configuration for this field test was not a typical LNG fueling station design. During this test, GTI had to use temporary hoses and connectors for filling an intermediate storage tank, none of which were insulated to the extent a permanent facility would be. GTI then used additional temporary hoses and connectors to fill the tanker trucks. Additional boil –off occurred due to frequent pauses during the production process	GTI's fix for this test was to by-pass the intermediate storage tank. Due to the nature of the field test, boil off could not be completely avoided.

System Commercialization

OVERVIEW

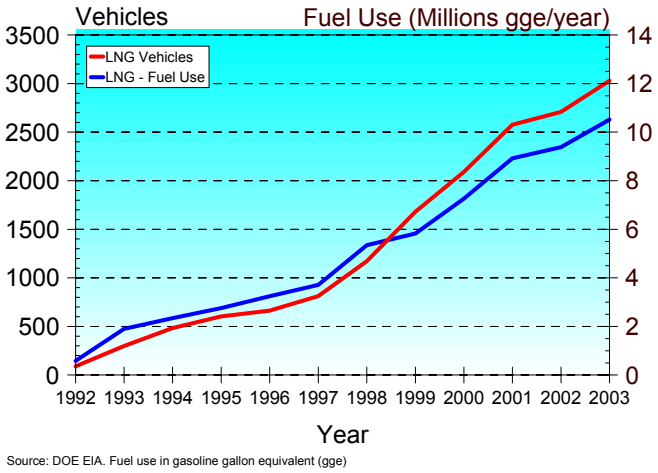

Figure 39: U.S. LNG Vehicle Market History

Historically, natural gas liquefiers have been built for very large-scale ocean transport projects (e.g., units in Indonesia, Algeria, Trinidad, etc.) or for natural gas peak shaving service. These units are custom-made, large-capacity plants with substantial initial capital cost and a year-round operating staff. Domestically, natural gas liquefiers and LNG have served as a complementary gas supply solution to meet peak fuel demand. Beyond peak shaving, LNG should experience increased use in these applications:

- Servicing remote communities not yet connected by pipelines (providing a competitive alternative to propane and fuel oil).
- Industrial applications, including LNG as a standby fuel or for remote customers.
- Using vaporized LNG as a distributed supply source during gas pipeline line service interruptions.
- LNG-powered vehicles.

Small-scale liquefaction has the potential for converting stranded natural gas reserves like remote gas wells – often referred to as “monetizing”– or by capturing opportunity fuels such as landfill gas or digester gas and turning them into value-added products. Pressures to limit methane releases due to global warming may create additional market opportunities like capturing gas during natural gas pipeline operations (e.g., pigging) where the gas might otherwise be vented.

With natural gas gaining importance in developed and developing nations throughout the world, several opportunities exist for distributed or onsite liquefied natural gas (LNG) and small-scale liquefaction systems. This is especially true in Texas, which produces roughly one quarter of the country’s natural gas. Smaller and distributed solutions provide pathways for monetizing stranded natural gas supplies or increasing deliverability and reliability in midstream and downstream natural gas markets (including industrial end users).

LNG vehicle market demand in the U. S. has grown over the past decade as shown in Figure 39. Growth is occurring in high-fuel-use fleets such as transit buses, refuse trucks, and regional over-the-road trucks. Texas and California are key areas for LNG vehicle use. Interest in LNG vehicles is being driven by the environmental benefits compared to heavy-duty diesel-powered vehicles and fuel cost savings.

System Economics

Through data generated in this project and in previous testing, GTI developed a small-scale liquefier economic model that provides LNG production life-cycle costs. The model has a variety of capabilities for identifying capital, operating and maintenance cost drivers – including Monte Carlo simulation to account for uncertainty and variability. The following table summarizes costs for LNG from this technology at two different sizes and using natural gas or a byproduct fuel such as landfill gas. Further reductions in LNG cost are possible in sizes up to 10,000 gallons per day. These compare favorably with current estimated purchased LNG costs in Texas of $0.90 to $1.00 per LNG gallon

	1,000 gal/day	5,000 gal/day
Retail Natural Gas	$0.72	$0.53
Byproduct Gas	$0.44	$0.27

The benefits of small-scale liquefaction plants include:

- Reducing or eliminating the cost and potential hazards with over-the-road LNG transport
- Matching LNG supply with demand
- Minimizing at risk capital
- Providing a value-added service (e.g., fleet fuel supply) on a scale that normally would not be economic.

Attributes of this system that contribute to the technical and economic viability of this technology include:

- Low first cost,
- Pre-packaged equipment that minimizes onsite construction costs,
- Simple to permit,
- Reliability, leading to reduced need for onsite operating and maintenance personnel.

Commercialization Partner

BOC Gases, a company of The Linde Group, is GTI's commercialization partner for this on-site, small-scale natural gas liquefaction system. BOC licensed the technology from GTI and plans to market the system to its customers worldwide. BOC also supported this project financially and with technical input. One of the attractions of the mixed refrigerant technology for on-site small scale liquefaction is its potential for capital and operating costs reductions compared to other technologies. Figure 40 shows target capital costs for on-site systems.

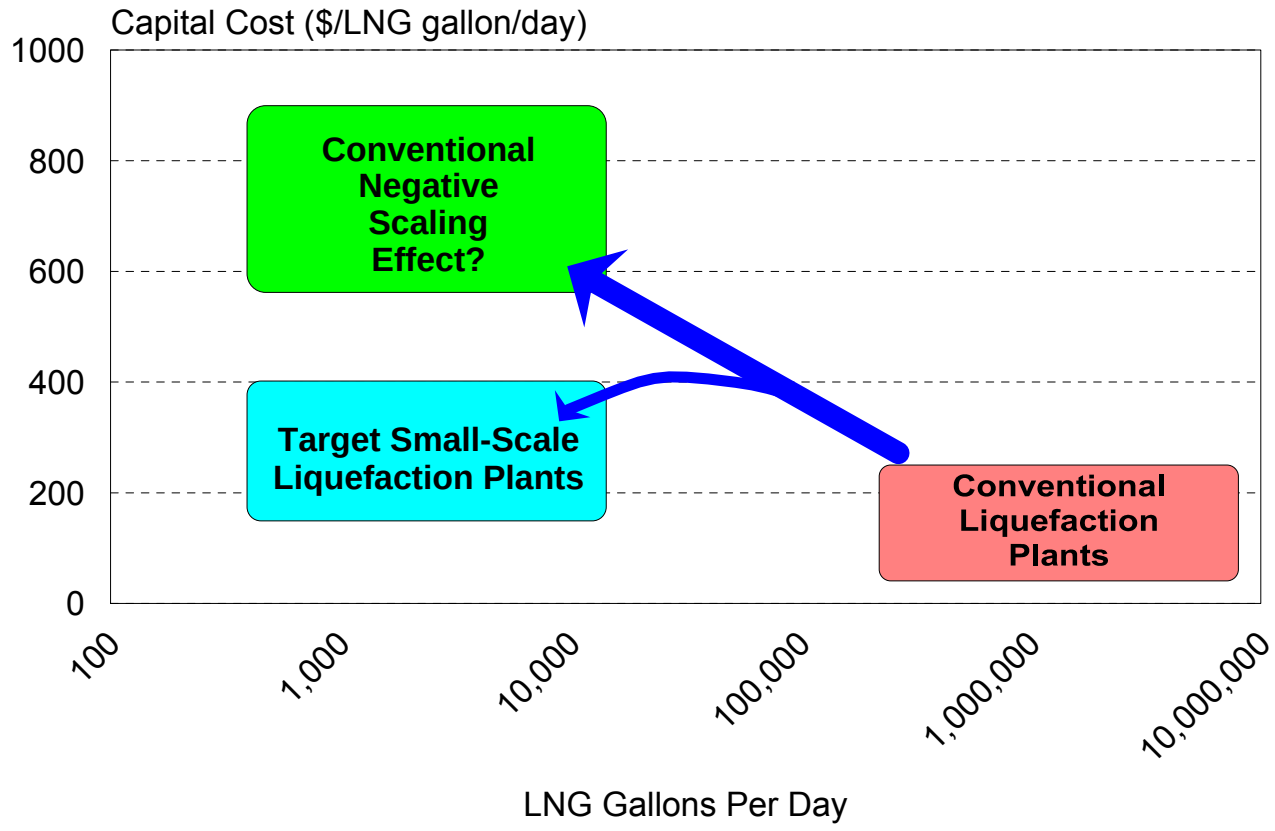

Figure 40: Target capital cost for on-site liquefaction systems

BOC, with its worldwide distribution, marketing, and technical service and support, will position this technology for a broad number of applications. BOC's market position and financial strength will position this LNG system to have an immediate impact on air emissions in a variety of applications, including many in Texas. One, 1000 gallon per day system can support approximately 20 tractor-trailer trucks. GTI has estimated that the NOx reduction for one such fleet would be about 7.6 tons per year. The commercial system will probably be scaled up to sizes of 10,000 to 30,000 gallons per day, supporting much larger fleets.

Benefits and Potential Markets

A key factor in the use of LNG for transportation applications is the availability of sufficient supplies. Many of the current LNG fleets depend on supplies that are fairly remote from the point of use, resulting in significant transportation costs. As the supply of existing LNG becomes tighter, this problem will only be magnified. The cost of delivery for LNG (typically in 10,000 gallon tank trucks) ranges from $0.05 -$0.10 per gallon for high-volume users. Costs are often much higher for short distances or for smaller or sporadic deliveries. Higher delivery costs are especially important in terms of new users and trial fleets where initial fuel utilization rates are low. A transportable onsite liquefaction system is seen as fitting well for market development uses such as these, enabling early use and fleet growth.

In addition to transport savings in making LNG at the point of use, issues such as weathering (e.g., change of LNG composition due to quicker vaporization of lighter components) and losses of fuel through venting are mitigated. As a result, the LNG is better suited for use as transportation fuel, matching fleet requirements virtually anywhere in the nation. More importantly, the lower overall cost of the LNG will enable fleets in the markets discussed below to match their operations with an economical and stable source of environmentally friendly fuel.

There are several markets that will benefit from the increased availability of LNG supplies, among them, transportation, including transit buses, waste hauling and short distance goods transport. Other potential transportation markets include long distance and interstate goods hauling, rail transport and marine applications such as ferries, tugs and service vessels. Non-transportation markets that would also benefit from small-scale liquefiers include supply (exploiting shut in gas sources) and use of landfill gas sources. Local gas distribution companies could also make use of systems for peak-shaving supplies as well as providing gas to isolated areas where pipelines are not practical or economical.

Centrally Fueled Heavy-Duty Urban Trucks

A relatively untapped market is the short distance return-to-base goods hauling, a centralized operation mode where vehicles begin and end their delivery routes at a facility operated by the fleet owner. This is an extremely large market. The American Trucking Association reports that more than 1.6 million class-eight trucks are operated for business in the U. S., each consuming nearly 10,000 gallons of diesel per year. In a 2001 study of California fleets, there were 55 operating LNG trucks (39 in grocery distribution and 16 other return-to-base) with 47 vehicles on order, and another 87 vehicles projected to enter the market. An excellent example of this type of application is the cross-border goods traffic along the Mexico / Texas border for goods that are manufactured in Mexico for delivery to Texas-based distribution centers.

Waste Hauling

Over the past 30 years, municipal solid waste (MSW) generation per capita has doubled in the United States, from 2.3 to 4.7 pounds per day. There are currently an estimated 136,000 refuse collection trucks, 12,000 transfer vehicles, and 31,000 dedicated recycling vehicles in use today. A recent survey by Inform, Inc. found there are 26 U.S. waste hauling fleets operating natural gas vehicles. Of these, 227 are CNG vehicles and 465 are LNG vehicles. The study further showed that at the time of the study, the companies planned to add 2,221 natural gas vehicles. Of these planned vehicles, 436 will be CNG and 1,785 will be LNG. This is a very significant addition of LNG fleet vehicles, and will definitely stress the currently already tight LNG supply network. Small-scale liquefaction units would be an economically viable means of serving this new load, particularly for the larger fleets being planned.

Transit Market

The transit bus market is a significant market for natural gas sales. Over the past several years, the number of natural gas transit buses in operation has significantly increased. According to a recent Natural Gas Vehicle Coalition (NGVC) survey utilizing data collected by the American Public Transportation Association (APTA) and the NGVC, there are more than 6,200 transit buses in operation at more than 85 transit agencies around the United States. This represents more than 11 percent of all transit buses and 97 percent of all alternative fuel buses. As of January 1, 2002, an additional 1,313 new natural gas buses were on order. There also are hundreds of other natural gas buses in operation at airports, universities and other locations that are not included in APTA's annual survey of transit bus operators.

The number of natural gas buses now represents approximately 11 percent of all transit buses and 97 percent of all alternatively fueled transit buses are powered by natural gas. Natural gas buses include dedicated, bi-fuel, and hybrid applications. More than 90 percent of the existing natural gas buses are fuel by compressed natural gas (CNG). Liquefied natural gas (LNG) bus fleets are concentrated mostly in Arizona, California, and Texas.

Supply Applications

Additional sources of gas that can be considered as "stranded" reserves are landfill gas facilities. Landfills are a good potential source of energy because they produce a methane-rich gas (approximately 55% methane, 45% CO_2) soon after startup and for up to 25 years after closure. There are approximately 1,500 municipal landfills in the U.S. of which over 600 are candidates for methane recovery.

Figure 41: Completed GTI natural gas liquefier with data acquisition and controls panel (tri-tower gas cleanup unit is not in picture).

Project Conclusion

This project proved the technical and commercial viability of GTI's mixed refrigerant, small-scale natural gas liquefaction technology for applications such as generating LNG on-site as a transportation fuel. GTI and its project partner, BOC successfully met all project goals, including the following:

- Designed and installed all technical updates that allowed for automated system operation and remote monitoring,
- Installed all planned mechanical improvements that resulted in improved system efficiency,
- Tested the system sufficiently to verify that the design is viable and technically sound,
- Designed and tested the automated gas clean-up system with the innovative tri-tower configuration,
- Cycled the system over 150 times for safe start-up and shutdown,
- Produced high-quality LNG that met all specifications required for a vehicle fuel,
- Performed all project activities in a safe manner and developed safe, standardized procedures for future operation.

Figure 42: Completed GTI natural gas liquefier showing major system enhancements

This project represents a successful partnership of State and Federal government agencies with private sector organizations to develop and position an environmentally responsive energy technology for broad market applications. Because the Texas Commission on Environmental Quality joined the US DOE, GTI, and BOC Gases in supporting this project, on-site natural gas liquefaction will become more broadly available for a multitude of applications.

For LNG transportation fuel applications, this technology represents a breakthrough in providing economically viable, on-site LNG production that will accomplish the following:

- **It will substantially reduce existing LNG supply problems that prevent some major NOx emitters from making the choice to switch to low NOx LNG.**
- **It will lower or possibly eliminate LNG fuel transportation costs, making LNG more attractive when compared to diesel fuel pricing.**
- **It will make the choice of using LNG a stronger economic possibility, which will encourage more fleets to use LNG, ultimately reducing emissions from the Texas transportation sector.**

Additionally, the technology offers benefits that are not limited to LNG as a transportation fuel. Those benefits include:

- **Providing back-up natural gas supplies to remote communities that have pipeline capacity bottlenecks,**
- **Monetizing stranded natural gas that does not have easy gathering pipeline access.**
- **Monetizing landfill or wastewater digester gas, and reducing emissions associated with those sources of methane.**

GTI wishes to thank the TCEQ for its support of this project and its leadership in bringing important clean energy technologies to the forefront of the marketplace.

Appendix

Attachment A
(FMEA – Hazards Analysis)

Attachment B

(Gas Samples, Tanker 2, 3, House Gas, and vent gas)

Attachment C

(Remote data analysis software “Labview” example screen shots)

Attachment D

(TSA CO2 Graphs)

Attachment E

(Daily Master Runs – pressure, temp, gas flow graphs)