NTRD Program Disclaimers

1. Disclaimer of Endorsement:

The posting herein of progress reports and final reports provided to TCEQ by its NTRD Grant Agreement recipients does not necessarily constitute or imply an endorsement, recommendation, or favoring by TCEQ or the State of Texas. The views and opinions expressed in said reports do not necessarily state or reflect those of TCEQ or the State of Texas, and shall not be used for advertising or product endorsement purposes.

2. Disclaimer of Liability:

The posting herein of progress reports and final reports provided to TCEQ by its NTRD Grant Agreement recipients does not constitute by TCEQ or the State of Texas the making of any warranty, express or implied, including the warranties of merchantability and fitness for a particular purpose, and such entities do not assume any legal liability or responsibility for the accuracy, completeness, or usefulness of any information,apparatus, product, or process disclosed, or represent that its use would not infringe privately owned rights.

TCEQ PROOF OF CONCEPT TESTING OF AN SFA INTERNATIONAL, INC. FUEL ADDITIVE

FINAL REPORT

SwRI Project No. 03-11959

Prepared for:

SFA International, Inc.
6143 Sienna Arbor Lane
Houston, TX 77041

Sponsored by TCEQ

Prepared by:

E. Robert Fanick
Group Leader

May 2006

THE PREPARATION OF THIS REPORT IS BASED ON WORK FUNDED IN PART BY THE STATE OF TEXAS THROUGH A GRANT FROM TEXAS COMMISSION ON ENVIRONMENTAL QUALITY

TCEQ PROOF OF CONCEPT TESTING OF AN SFA INTERNATIONAL, INC. FUEL ADDITIVE

FINAL REPORT

Prepared for

SFA International, Inc.
6143 Sienna Arbor Lane
Houston, TX 77041

Sponsored by TCEQ

May 2006

Prepared by:

E. Robert Fanick,
Group Leader

Approved:

Jeff J. White,
Director of Development

Reviewed by:

Lawrence R. Smith, Manager
Chemistry and Unregulated Emissions

DEPARTMENT OF ENGINE AND EMISSIONS RESEARCH
ENGINE, EMISSIONS, AND VEHICLE RESEARCH DIVISION

This report shall not be reproduced, except in full, without the written approval of Southwest Research Institute®.
Results and discussion given in this report relate only to the test items described in this report.

TABLE OF CONTENTS

Page

LIST OF FIGURES ..... **iii**

LIST OF TABLES ..... **iv**

1.0 INTRODUCTION **1**

2.0 EXPERIMENTAL SETUP **2**

3.0 DESCRIPTION OF FUELS TESTED **4**

4.0 TEST PLAN AND TEST PROCEDURES **5**

5.0 TEST RESULTS **8**

6.0 SUMMARY **12**

Appendices **No. of Pages**

A Power Validation And Torque Map Data For A 1991 Detroit Diesel Series 60 Running With A Reference Fuel And With SFA® 116-4509 Fuel Additive From SFA International, Inc. 8

B Transient Regulated Emissions Data For A 1991 Detroit Diesel Series 60 Running With A Reference Fuel And With SFA® 116-4509 Fuel Additive From SFA International, Inc. 14

C Comparison of Volumetric And Carbon Balance Fuel Flow Measurements 1

LIST OF FIGURES

Figure **Page**

1 Sampling System Used for Transient Emission Measurements.....3
2 Graphic Representation of Torque and Speed Commands for the Transient Cycle for Heavy-Duty Engines 7
3 Engine Performance Using Fuels R and C.....8

LIST OF TABLES

Table **Page**

1 Engine Specifications and Features....2
2 Fuel Analysis Results for Fuel R....4
3 Test Plan for Proof of Concept Testing With a Heavy-Duty Diesel Engine....6
4 Summary of Transient Torque Maps Obtained With the 1991 Detroit Diesel Series 60 Heavy-Duty Diesel Test Engine....8
5 Summary of Regulated Emissions....10
6 Summary of the Average Values for HC, CO, NO_x, PM, and BSFC....10
7 Particulate-Phase Iron And Magnesium Results....11

1.0 INTRODUCTION

The test results reported herein were generated by the Department of Engine and Emissions Research (DEER), Division of Engine, Emissions, and Vehicle Research at Southwest Research Institute® (SwRI®), for SFA International, Inc. This study was performed for SFA International, Inc. as sponsored by a grant from the Texas Commission for Environmental Quality (TCEQ), New Technology Research and Development Grant, Contract No. 582-5-70807-M024. This project was run as SwRI Project 03.11959. The Principal Investigator and Project Leader for SwRI was Mr. E. Robert Fanick, Group Leader in DEER. SwRI technical personnel involved in engine operation, emissions sampling, and emissions analysis included Messrs. Kevin P. Hohn and Richard E. Cortez. Data reduction was performed by Ms. Sylvia G. Niño, Ms. Amanda L. Korzekwa, and Ms. Kathleen M. Jack. The SwRI Project Manager for this work was Dr. Lawrence R. Smith, Manager of the Chemistry and Unregulated Emissions Section.

This report contains hot-start transient emission results obtained from a 1991 Detroit Diesel Corporation (DDC) Series 60 heavy-duty diesel engine using a reference fuel, Fuel R, and a candidate fuel, Fuel C, containing additive SFA® 116-4509 from SFA International, Inc. Fuel R was an ultra-low sulfur No. 2 diesel fuel, and Fuel C was the same fuel blended with the SFA® 116-4509 additive. These fuels were tested following a proof of concept test protocol which included six hot-start tests with the reference fuel, a conditioning period of 72 hours of engine operation with the candidate fuel, six hot-start tests with the candidate fuel, and a final set of two hot-starts with the reference fuel to determine any residual effects of the candidate fuel remained when the additive was not included in the fuel.

2.0. EXPERIMENTAL SETUP

For testing, a 1991 DDC Series 60 (Serial No. 06R0038671) heavy-duty diesel engine was mounted in a transient-capable test cell. This engine had an inline, six-cylinder configuration rated for 365 hp at 1800 rpm. It was turbocharged and used a laboratory water-to-air heat exchanger for a charge air intercooler. Table 1 lists the engine specifications and features. The exhaust was routed to a full flow constant volume sampler (CVS) that utilizes a positive displacement pump (PDP), as illustrated in Figure 1. Total flow in the tunnel was maintained at a nominal flow rate of about 2000 SCFM. Sample zone probes for total particulate (PM), heated oxides of nitrogen (NO_x), heated hydrocarbons (HC), carbon monoxide (CO), and carbon dioxide (CO_2) measurements were connected to the main tunnel. Probes for background gas measurement were connected downstream of the dilution air filter pack, but upstream of the mixing section. The dilution system was equipped with pressure and temperature sensors at various locations in order to obtain all necessary information required by the U.S. Code of Federal Regulation (CFR 40, Part 86, Subpart N).

TABLE 1. ENGINE SPECIFICATIONS AND FEATURES

Engine Parameter	Comment
Engine Serial Number	06R0038671
Make	Detroit Diesel
Model	Series 60, 6067GU60
Engine Displacement and Configuration	12.7 L, I-6
Emission Family	MDD12.7FZAK
Rated Power	365 bhp at 1800 rpm
Electronic Control Module	DDEC-II
Aspiration	Turbocharged

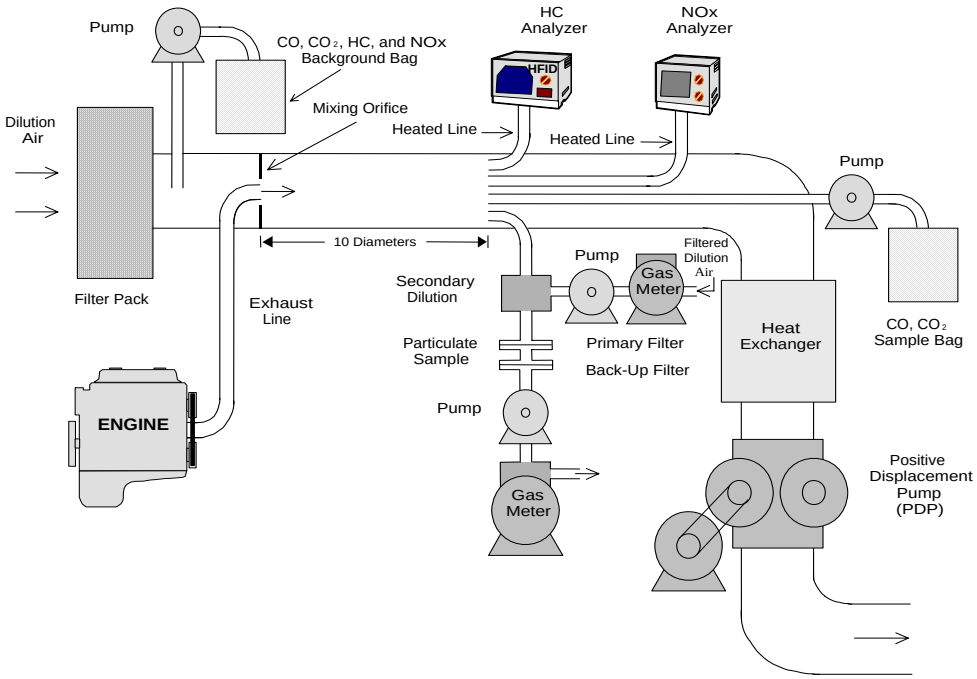

FIGURE 1. SAMPLING SYSTEM USED FOR TRANSIENT EMISSION MEASUREMENTS

3.0. DESCRIPTION OF FUELS TESTED

The reference fuel, Fuel R (SwRI Code EM-5504-F), was a No. 2 ultra-low sulfur certification diesel fuel from Chevron Phillips Chemical Company. This fuel was blended with SFA® 116-4509 from SFA International, Inc. to prepare Fuel C (SwRI code EM-5845-F). No analysis was performed on the treated fuel other than a determination of the iron (Fe) and magnesium (Mg) content. These determinations showed an Fe concentration of 51.0 mg/kg, and a Mg concentration of 25.5 mg/kg. Table 2 lists the fuel analysis results for the reference fuel.

TABLE 2. FUEL ANALYSIS RESULTS FOR FUEL R

Fuel Analysis	Test Method	Results for EM-5504-F
Sulfur, ppm	D5453	0.6
Aromatics, vol %	D5186	7.6
Cetane Number	D613	52.6
API Gravity	D1250	38.2
Viscosity @ 40°C, cSt	D445	2.675
Flash Point, °F	D93	180
IBP, °F	D86	398
10%, °F		428
50%, °F		490
90%, °F		567
EP, °F		608

4.0. TEST PLAN AND TEST PROCEDURES

Table 3 presents the test plan followed for proof of concept heavy-duty engine testing. This test plan begins with a six hot-start EPA transient test sequence with the reference fuel (Fuel R) to establish baseline emissions for the engine. The reference fuel was then blended with the SFA® 116-4509 additive (Fuel C), and a conditioning period of 72 hours using repetitive EPA transient cycles was performed with the candidate fuel. At the conclusion of the conditioning period, a six hot-start EPA transient test sequence was conducted with Fuel C. The fuel was then changed back to the reference fuel, and two additional hot-start tests were conducted to determine if the engine emissions and fuel consumption rates returned to their original baseline levels.

The EPA transient cycle is described by means of percent of maximum torque and percent of rated speed for each one-second interval over a test cycle of 1199 seconds duration. To generate a transient cycle, an engine's full power curve is obtained from an engine speed below curb idle speed to maximum no-load engine speed. Data from this "power curve," or engine map, are used with the specified speed and load percentages to form a transient cycle. A graphic presentation of the speed and torque commands which constitute a transient cycle is given in Figure 2 for illustration purposes.

In general, a transient test consists of a cold-start transient cycle and a hot-start transient cycle. The same engine command cycle is used in both cases. For the cold-start, the diesel engine is operated over a "prep" cycle, and then allowed to stand overnight in an ambient soak at a temperature between 68 and 86°F. The cold-start transient cycle begins when the engine is cranked for cold start-up. Upon completion of the cold-start transient cycle, the engine is stopped and allowed to stand for 20 minutes. After this hot-soak period, a hot-start cycle begins with engine cranking. In order to determine how well the engine followed the transient command cycle, engine performance is compared to engine command, and several statistics are computed. These computed statistics must be within tolerances specified in the CFR. In addition to the statistical parameters, the cycle work actually produced should be between 5 percent above and 15 percent below the work requested by the command cycle. The first five minutes of the cycle is designated as the New York Non-Freeway (NYNF) portion of the test and represents city operation with extensive idle time. The second five minutes is called the Los Angeles Non-Freeway (LANF) portion. This part of the test also represents city operation, but without the excessive idle time. The third five minute section of the test is called the Los Angeles Freeway (LAF) portion. This part is more representative of higher speed conditions indicative of freeway operation. The final five minutes of the EPA transient cycle is a repeat of the NYNF portion. These four parts are combined to give the EPA transient cycle.

TABLE 3. TEST PLAN FOR PROOF OF CONCEPT TESTING WITH A HEAVY-DUTY DIESEL ENGINE

Step	Description
1	Perform emission instrument calibrations as required. Calibrate torquemeter and check signal conditioning systems. Validate CVS gaseous and particulate sampling systems using propane recovery techniques.
2	Check engine condition using in-house, low sulfur emissions type fuel, and note fault codes if any. Bring engine oil level to "full" with a manufacturer's recommended oil.
3	Perform fuel change procedure to operate on Fuel R. Change filter, purge fuel supply, etc.
4	Warm up engine and operate at rated speed and load, then check performance.
5	Conduct transient "full-throttle" torque map from low- to high-idle. Compute and store resulting transient command cycle. (Note: This initial transient command cycle with Fuel R was used for all subsequent emission tests in this test plan. Other torque-map information generated with either Fuels R or C during this test work was stored for documentation purposes.)
6	Run two 20-minute practice or conditioning transient cycles without a 20-minute soak between cycles, and adjust dynamometer controls to meet statistical limits for transient cycle operation
7	Soak the engine for 20-minutes. Run six hot-start transient tests with a 20-minute soak between each. For each individual hot-start test, determine THC, CO, NO_x, and PM. Measure fuel flow volumetrically in addition to the carbon balance method. During one of the hot-starts, measure particulate-phase Fe and Mg.
8	Perform fuel change to Fuel C. Operate the engine for 72 hours using repetitive EPA transient cycles to represent normal engine operation.
9	Repeat Steps 4 through 7 with Fuel C.
10	Perform fuel change to Fuel R. Repeat Steps 4 through 6.
11	Soak the engine for 20 minutes. Run two hot-start transient tests with a 20-minute soak between each. For each individual hot-start test, determine THC, CO, NO_x, and PM.
12	Summarize data and prepare the final report.

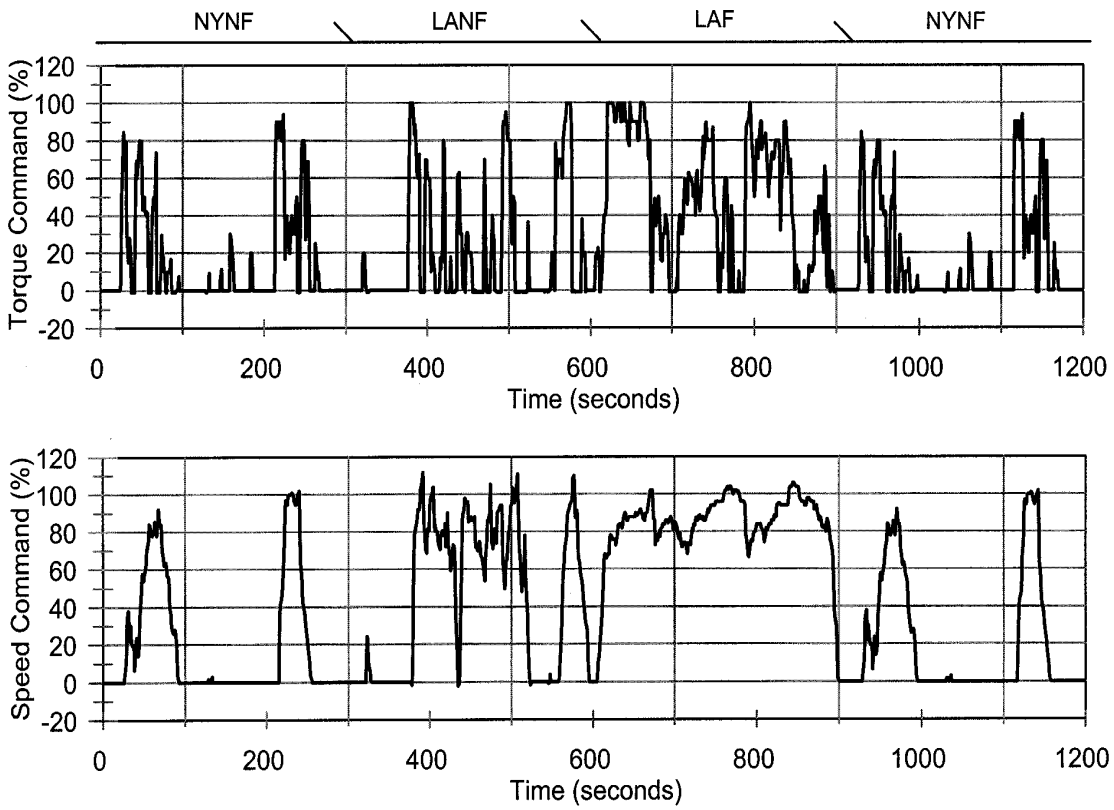

FIGURE 2. GRAPHIC REPRESENTATION OF TORQUE AND SPEED COMMANDS FOR THE TRANSIENT CYCLE FOR HEAVY-DUTY DIESEL ENGINES

5. TEST RESULTS

Results for the baseline transient torque map that was generated with Fuel R and used as the reference map for all subsequent transient runs are given in Table 4. Table 4 also contains the torque map data for Fuel C and data for the repeat map with Fuel R. The results indicate that engine performance characteristics were consistent throughout the testing. Figure 3 shows a graphical representation of the torque map data for both fuels. More detailed data on engine performance is given in Appendix A.

TABLE 4. SUMMARY OF TRANSIENT TORQUE MAPS OBTAINED WITH THE 1991 DETROIT DIESEL SERIES 60 HEAVY-DUTY DIESEL TEST ENGINE

Engine Speed, rpm	600	700	800	900	1000	1100	1200	1300	1400	1500	1600	1700	1800
Fuel R													
First Map, lb-ft [a]	616	647	719	856	1019	1213	1390	1340	1261	1203	1166	1120	1049
Repeat Map, lb-ft	610	640	719	866	1044	1191	1398	1334	1259	1195	1159	1108	1044
Fuel C													
First Map, lb-ft	603	637	717	872	1022	1178	1386	1342	1258	1200	1164	1116	1058
Second Map, lb-ft	608	643	724	874	1027	1184	1396	1340	1257	1202	1161	1112	1053

Idle speed: 600 rpm, rated speed: 1800 rpm.
[a] This map was used as reference for all subsequent transient cycles.

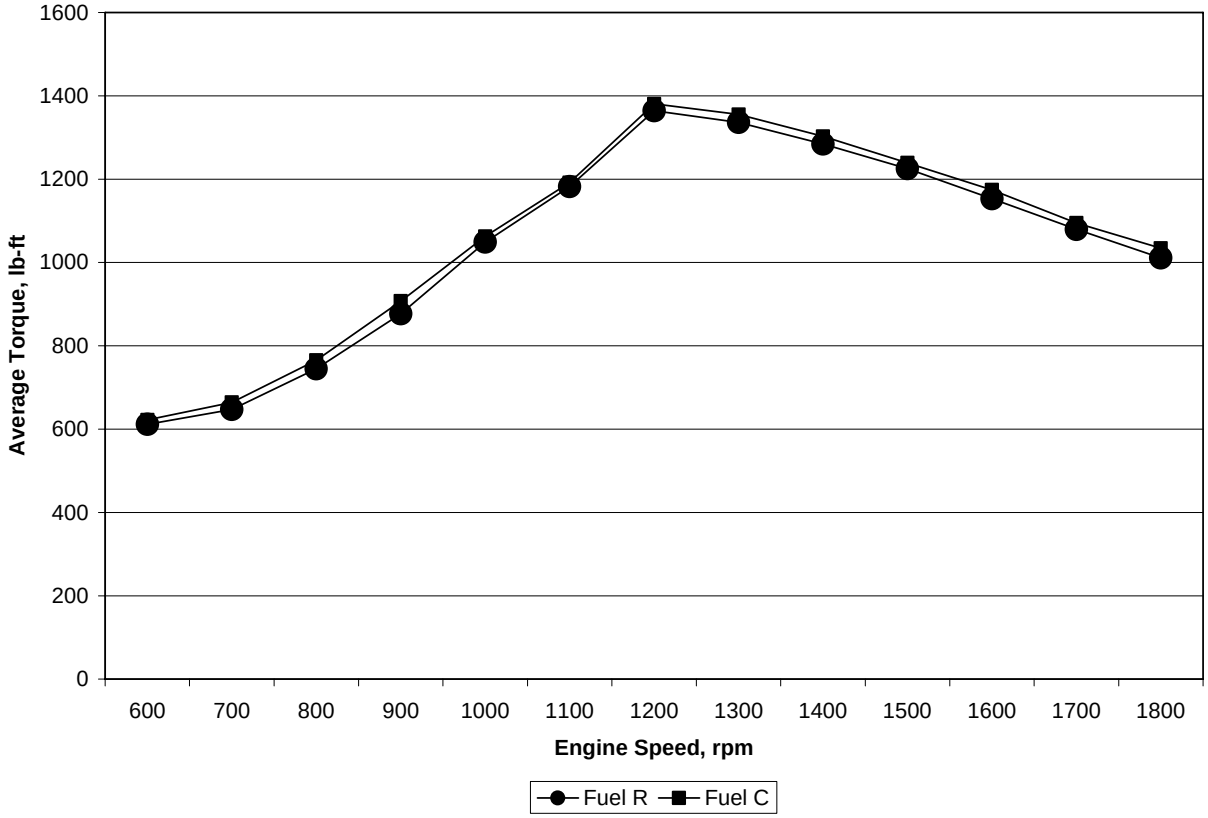

FIGURE 3. ENGINE PERFORMANCE USING FUELS R AND C

During steady-state performance checks, the 1991 DDC Series 60 engine had a maximum power of 362 hp at a rated speed of 1800 rpm on Fuel R for the initial baseline, a maximum power of 361 hp and 362 hp on Fuel C, and a maximum power of 358 hp for the final baseline. Peak torque at 1200 rpm was 1391 lb-ft on Fuel R for the initial baseline, 1375 lb-ft and 1402 lb-ft on Fuel C, and 1394 lb-ft for the final baseline. No operational problems were observed.

Table 5 gives emission results for HC, CO, NO_x, PM, and brake specific fuel consumption (BSFC) obtained for each of the tests. Detailed test results are given in Appendix B. The average, standard deviation, and coefficient of variation for each set of three hot-starts (only two for the final tests with Fuel R) are also included in Table 5 for each fuel. Each set of three hot-start averages was then averaged once again to determine an overall average for Fuel R and an overall average for Fuel C. (Please note that while averages, standard deviations, and coefficient of variations were calculated for the duplicate hot-start tests with Fuel R that followed the Fuel C testing, the data were not utilized in subsequent calculations as these tests were only conducted to determine if there was any residual effect from the additive.) Table 6 presents these overall averages, standard deviations, and coefficient of variations for the two fuels. No emissions reductions with Fuel C could be observed when the two data sets were compared. No residual effects from Fuel C were noted for any of the emissions when the fuel was changed back to Fuel R. As noted in Table 3, the fuel flow was also measured volumetrically for each test, and these results are presented in Appendix C along with the carbon balance results.

In addition to the analyses for the regulated emissions, two filters were analyzed for Fe and Mg content. One filter was collected during the C8 test with the candidate fuel, and the second was collected during the R3 test with the reference fuel. The reference fuel filter was analyzed to provide background levels of Fe and Mg. Table 7 presents the Fe and Mg results after background correction. Based on the particulate mass of each element found on the filter, the percent recoveries for the fuel-based Fe and Mg were 67 and 98 percent, respectively.

TABLE 5. SUMMARY OF REGULATED EMISSIONS

Test Number	Test Fuel	Test Date	Transient Emissions, g/hp-hr				BSFC, lb/hp-hr	Work, hp-hr
			HC	CO	NO_x	PM		
R1	Reference	2/16/2006	0.034	2.579	4.579	0.188	0.383	24.13
R2		2/16/2006	0.026	2.632	4.723	0.184	0.385	23.99
R3		2/16/2006	0.031	2.595	4.612	0.183	0.379	24.06
		Mean	0.030	2.602	4.638	0.185	0.382	24.06
		Std. Dev	0.004	0.027	0.075	0.003	0.003	0.070
		% COV	13.3%	1.0%	1.6%	1.4%	0.8%	0.3%
R4	Reference	2/16/2006	0.077	2.606	4.605	0.172	0.378	24.03
R5		2/16/2006	0.028	2.628	4.658	0.185	0.382	23.98
R6		2/16/2006	0.042	2.661	4.730	0.184	0.377	23.93
		Mean	0.049	2.632	4.664	0.180	0.379	23.98
		Std. Dev	0.025	0.028	0.063	0.007	0.003	0.050
		% COV	51.5%	1.1%	1.3%	4.0%	0.7%	0.2%
Engine Operation for 72 Hours with Additive								
C7	Candidate	2/20/2006	0.058	2.931	4.631	0.213	0.391	23.18
C8		2/20/2006	0.056	2.891	4.661	0.227	0.389	23.15
C9		2/20/2006	0.059	2.945	4.697	0.219	0.390	23.17
		Mean	0.058	2.922	4.663	0.220	0.390	23.17
		Std. Dev	0.002	0.028	0.033	0.007	0.001	0.015
		% COV	2.6%	1.0%	0.7%	3.2%	0.3%	0.1%
C10	Candidate	2/20/2006	0.058	2.936	4.616	0.221	0.389	23.09
C11		2/20/2006	0.042	2.843	4.689	0.217	0.390	23.14
C12		2/20/2006	0.050	2.898	4.549	0.214	0.390	23.17
		Mean	0.050	2.892	4.618	0.217	0.390	23.13
		Std. Dev	0.008	0.047	0.070	0.004	0.001	0.040
		% COV	16.0%	1.6%	1.5%	1.6%	0.1%	0.2%
R13	Reference	2/21/2006	0.053	2.701	4.674	0.195	0.384	23.13
R14		2/21/2006	0.058	2.587	4.642	0.198	0.377	23.11
		Mean	0.056	2.644	4.658	0.197	0.381	23.12
		Std. Dev	0.004	0.081	0.023	0.002	0.005	0.014
		% COV	6.4%	3.0%	0.5%	1.1%	1.3%	0.1%

TABLE 6. SUMMARY OF THE AVERAGE VALUES FOR HC, CO, NO_x, PM, AND BSFC

Fuel Type		NO_x, g/hp-hr	PM, g/hp-hr	HC, g/hp-hr	CO, g/hp-hr	BSFC, lb/hp-hr
R	Average	4.65	0.18	0.04	2.62	0.381
	Std. Dev	0.07	0.01	0.02	0.03	0.003
	% COV	1.5	2.7	36.9	1.0	0.7
C	Average	4.64	0.22	0.05	2.91	0.390
	Std. Dev	0.05	0.01	0.01	0.04	0.001
	% COV	1.1	2.4	8.8	1.3	0.2

TABLE 7. PARTICULATE-PHASE IRON AND MAGNESIUM RESULTS

Test Number	Element	Brake Specific Emissions, mg/bhp-hr	Brake Specific Additive Consumption, mg/bhp-hr	Percent Recovery
C8	Fe	6.0	9.0	66.7
	Mg	4.4	4.5	97.8

6.0. SUMMARY

This test program was conducted for SFA International, Inc. by the DEER at SwRI. Emission results from six hot-start transient tests run on a 1991, DDC Series 60 heavy-duty diesel were compared for a reference fuel (Fuel R) and for the same fuel blended with the SFA® 116-4509 additive (Fuel C). Averages and standard deviations were calculated from averages for two sets of three hot-start tests for the reference fuel and the additized fuel. When these averaged values were compared, no emission reductions with Fuel C could be discerned.

APPENDIX A

POWER VALIDATION AND TORQUE MAP DATA FOR A 1991 DETROIT DIESEL SERIES 60 RUNNING WITH A REFERENCE FUEL AND WITH SFA® 116-4509 FUEL ADDITIVE FROM SFA INTERNATIONAL, INC.

3-11959-001
Project Number

PV-021506
Test or ID Number

POWER VALIDATION
HEAVY-DUTY DIESEL ENGINE

Cell No.: 11	Date: 02/16/2008	Start Time: 11:40	Finish Time: 11:50
Engine S/N or ID: 06R0038671		[X] As-Received	[ ] Modified
Operator: KEV	Project Leader: Robert Fanick		Fuel Code: EM-5504-F
Low Idle rpm (no load): 600	Low Idle rpm @ 0	lb-ft CITT: 0	High Idle rpm (governed): 1,920
Notes:			

Parameters	Rated Power	Peak Torque
Torque (lb-ft)	1,055	1,391
Speed (rpm)	1,800	1,200
Power (bhp)	362.0	320.0
Fuel Flow (lb/hr)	114.7	102.3
Water Out (°F)	192.0	194
Water In (°F)	166	162
Oil (°F)	216	218
Inlet Air (°F)	71.0	72
Fuel (°F)	93	91
Exhaust (°F)	840	997
Intercooler In (°F)	274	264
Intercooler Out (°F)	119	105
IC Coolant Supply (°F)	73.0	73.0
Inlet Air Dewpoint (°F)	60.7	61.7
Chiller Water (°F)	60.3	60.2
Barometer ("Hg)	29.01	29.01
Inlet Air Restriction ("H2O)	16.0	-7.50
Exhaust Restriction ("Hg)	3.0	1.50
Boost Pres. Before IC ("Hg)	38.70	35.20
Boost Pres. After IC ("Hg)	35.4	33.4
Intercooler ÐP ("H2O)	44.9	24.5
Oil Pressure (psig)	51.0	45.0
Fuel Pressure (psig)	37.0	37.0
Engine Water Pres. (psig)		
Hour Meter (hours)	647.2	647.2

3-11959-001
Project Number

MAP-021506
Test Number

POWER MAP
HEAVY-DUTY DIESEL ENGINE

Date: 02/15/2006 Time: 12:40	Engine Model: S60		
Cell No.: 11	Serial No. or ID: 06R0038071		
Operator: KEV	Hour Meter: 646.8	Dura. Hours:	0.00
Project Leader: Robert Fanick	Fuel Code: EM-5504-F	Baro., "Hg:	29.01

MAP PRECONDITIONING

Parameter	Rated Speed	RatedTorque
Power (bhp)	362.00	320.00
Torque (lb-ft)	1,055.00	1,391.00
Speed (rpm)	1,800.00	1,200.00
Fuel Flow (lb/hr)	114.70	102.30
Inlet Air Restriction ("H2O)	-16.00	-7.50
Exhaust Restriction ("Hg)	3.00	1.50
Intake Air (°F)	71.00	72.00
Intake Air Dewpoint (°F)	60.70	61.70
ÐP Across Intercooler ("H2O)	44.88	24.48
Temperature After Intercooler (°F)	119.00	105.00

Map @ [X] 8 rpm/sec sweep [ ] Other: Idle Speed, rpm Low: 600 High: 1,920

RESULTS

Speed, rpm	Torque lb-ft	Speed, rpm	Torque lb-ft	Speed, rpm	Torque lb-ft	Speed, rpm	Torque lb-ft
100		1100	1,213	2100		3100	
200		1200	1,390	2200		3200	
300		1300	1,340	2300		3300	
400		1400	1,261	2400		3400	
500	576	1500	1,203	2500		3500	
600	616	1600	1,166	2600		3600	
700	647	1700	1,120	2700		3700	
800	719	1800	1,049	2800		3800	
900	856	1900		2900		3900	
1000	1,019	2000		3000		4000	

Speed Ramp Rate 0.0 rpm/sec RATED SPEED, rpm: Manufacturer 1,800 Measured 1,718

Calculated Maximum Speed = 1.13*[Highest RATED SPEED - Curb Idle Speed] + Curb Idle Speed = 1,956 rpm

TRANSIENT CYCLE INPUTS

CITT: 0 lb-ft

Idle Speed: 600 rpm Rated Speed 1,800 rpm Max. Power 363.0 hp Max. Torque 1,413 lb-ft

3-11959-001
Project Number

PV 22006
Test or ID Number

POWER VALIDATION
HEAVY-DUTY DIESEL ENGINE

Cell No.: 11	Date: 02/20/2006	Start Time: 12:10	Finish Time: 12:21
Engine S/N or ID: 06R0038671		[X] As-Received	[ ] Modified
Operator: KEV	Project Leader: Robert Fanick		Fuel Code: EM-5845-F
Low Idle rpm (no load): 600	Low Idle rpm @ 0	lb-ft CITT: 0	High Idle rpm (governed): 1,920
Notes:			

Parameters	Rated Power	Peak Torque
Torque (lb-ft)	1,050	1,375
Speed (rpm)	1,800	1,200
Power (bhp)	361.0	314.0
Fuel Flow (lb/hr)	115.2	103.0
Water Out (°F)	192.0	194
Water In (°F)	156	160
Oil (°F)	194	203
Inlet Air (°F)	68.0	68
Fuel (°F)	90	89
Exhaust (°F)	806	987
Intercooler In (°F)	267	259
Intercooler Out (°F)	111	104
IC Coolant Supply (°F)	75.0	76.0
Inlet Air Dewpoint (°F)	45.3	47.2
Chiller Water (°F)	48.8	48.8
Barometer ("Hg)	29.26	29.25
Inlet Air Restriction ("H2O)	-16.1	-7.50
Exhaust Restriction ("Hg)	2.7	1.60
Boost Pres. Before IC ("Hg)	39.40	53.90
Boost Pres. After IC ("Hg)	35.7	33.9
Intercooler ÐP ("H2O)	50.3	27.2
Oil Pressure (psig)	54.0	48.0
Fuel Pressure (psig)	38.0	39.0
Engine Water Pres. (psig)		
Hour Meter (hours)	725.0	725.1

3-11959-001
Project Number

PM-22006
Test Number

POWER MAP
HEAVY-DUTY DIESEL ENGINE

Date: 02/20/2006 Time: 12:10	Engine Model: S60		
Cell No.: 11	Serial No. or ID: 06R0038671		
Operator: KEV	Hour Meter: 725.0	Dura. Hours:	0.00
Project Leader: Robert Fanick	Fuel Code: EM-5845-F	Baro., "Hg:	29.26

MAP PRECONDITIONING

Parameter	Rated Speed	RatedTorque
Power (bhp)	361.00	314.00
Torque (lb-ft)	1,050.00	1,375.00
Speed (rpm)	1,800.00	1,200.00
Fuel Flow (lb/hr)	115.20	103.00
Inlet Air Restriction ("H2O)	-16.10	-7.50
Exhaust Restriction ("Hg)	2.70	1.60
Intake Air (°F)	68.00	68.00
Intake Air Dewpoint (°F)	45.30	47.20
ÐP Across Intercooler ("H2O)	50.32	27.20
Temperature After Intercooler (°F)	111.00	104.00

Map @ [X] 8 rpm/sec sweep [ ] Other: Idle Speed, rpm Low: 600 High: 1,920

RESULTS

Speed, rpm	Torque lb-ft	Speed, rpm	Torque lb-ft	Speed, rpm	Torque lb-ft	Speed, rpm	Torque lb-ft
100		1100	1,178	2100		3100	
200		1200	1,386	2200		3200	
300		1300	1,342	2300		3300	
400		1400	1,258	2400		3400	
500	570	1500	1,200	2500		3500	
600	603	1600	1,164	2600		3600	
700	637	1700	1,116	2700		3700	
800	717	1800	1,058	2800		3800	
900	872	1900		2900		3900	
1000	1,022	2000		3000		4000	

Speed Ramp Rate 7.6 rpm/sec RATED SPEED, rpm: Manufacturer 1,800 Measured 1,727

Calculated Maximum Speed = 1.13*[Highest RATED SPEED - Curb Idle Speed] + Curb Idle Speed = 1,956 rpm

TRANSIENT CYCLE INPUTS

CITT: 0 lb-ft

Idle Speed: 600 rpm Rated Speed 1,800 rpm Max. Power 364.0 hp Max. Torque 1,409 lb-ft

3-11959-001
Project Number

22106-PV
Test or ID Number

POWER VALIDATION
HEAVY-DUTY DIESEL ENGINE

Cell No.: 11	Date: 02/21/2006	Start Time: 8:55	Finish Time: 9:05
Engine S/N or ID: 06R0038671		[X] As-Received	[ ] Modified
Operator: KEV	Project Leader: Robert Fanick		Fuel Code: EM-5504-F
Low Idle rpm (no load): 600	Low Idle rpm @ 0	lb-ft CITT: 0	High Idle rpm (governed): 1,920
Notes:			

Parameters	Rated Power	Peak Torque
Torque (lb-ft)	1,056	1,402
Speed (rpm)	1,800	1,200
Power (bhp)	362.0	320.0
Fuel Flow (lb/hr)	114.4	104.6
Water Out (°F)	192.0	195
Water In (°F)	158	161
Oil (°F)	206	211
Inlet Air (°F)	68.0	69
Fuel (°F)	93	90
Exhaust (°F)	834	1,004
Intercooler In (°F)	273	268
Intercooler Out (°F)	123	113
IC Coolant Supply (°F)	74.0	73.0
Inlet Air Dewpoint (°F)	49.9	51.4
Chiller Water (°F)	53.0	53.0
Barometer ("Hg)	29.12	29.12
Inlet Air Restriction ("H2O)	-16.0	-7.80
Exhaust Restriction ("Hg)	2.7	1.60
Boost Pres. Before IC ("Hg)	40.00	37.50
Boost Pres. After IC ("Hg)	36.1	35.6
Intercooler ÐP ("H2O)	53.0	25.8
Oil Pressure (psig)	53.0	47.0
Fuel Pressure (psig)	37.0	38.0
Engine Water Pres. (psig)		
Hour Meter (hours)	728.4	728.5

SwRI - Department of Emissions Research
FORM 07-001A

03/05/2006

3-11959-001
Project Number

22106 PM
Test Number

POWER MAP
HEAVY-DUTY DIESEL ENGINE

Date: 02/21/2006 Time: 8:55	Engine Model: S60		
Cell No.: 11	Serial No. or ID: 06R0038671		
Operator: KEV	Hour Meter: 728.1	Dura. Hours:	0.00
Project Leader: Robert Fanick	Fuel Code: EM-5504-F	Baro., "Hg:	29.12

MAP PRECONDITIONING

Parameter	Rated Speed	RatedTorque
Power (bhp)	362.00	320.00
Torque (lb-ft)	1,056.00	1,402.00
Speed (rpm)	1,800.00	1,200.00
Fuel Flow (lb/hr)	114.40	104.00
Inlet Air Restriction ("H2O)	-16.00	-7.80
Exhaust Restriction ("Hg)	2.70	1.60
Intake Air (°F)	68.00	68.00
Intake Air Dewpoint (°F)	49.90	51.40
ÐP Across Intercooler ("H2O)	53.04	25.84
Temperature After Intercooler (°F)	123.00	113.00

Map @ [ ] 8 rpm/sec sweep [X] Other: Idle Speed, rpm Low: 600 High: 1,920

RESULTS

Speed, rpm	Torque lb-ft	Speed, rpm	Torque lb-ft	Speed, rpm	Torque lb-ft	Speed, rpm	Torque lb-ft
100		1100	1,184	2100		3100	
200		1200	1,396	2200		3200	
300		1300	1,340	2300		3300	
400		1400	1,257	2400		3400	
500	574	1500	1,202	2500		3500	
600	608	1600	1,161	2600		3600	
700	643	1700	1,112	2700		3700	
800	724	1800	1,053	2800		3800	
900	874	1900		2900		3900	
1000	1,027	2000		3000		4000	

Speed Ramp Rate 0.0 rpm/sec RATED SPEED, rpm: Manufacturer 1,800 Measured 1,719

Calculated Maximum Speed = 1.13*[Highest RATED SPEED - Curb Idle Speed] + Curb Idle Speed = 0 rpm

TRANSIENT CYCLE INPUTS

CITT: 0 lb-ft

Idle Speed: 600 rpm Rated Speed 1,800 rpm Max. Power 364.0 hp Max. Torque 1,414 lb-ft

3-11959-001
Project Number

2-21-06-PV2
Test or ID Number

POWER VALIDATION
HEAVY-DUTY DIESEL ENGINE

Cell No.: 11	Date: 02/21/2006	Start Time: 2.00	Finish Time: 2.20
Engine S/N or ID: 06R0038671		[X] As-Received	[ ] Modified
Operator: KH	Project Leader: Robert Fanick		Fuel Code: EM-5785-F
Low Idle rpm (no load): 600	Low Idle rpm @ 0	lb-ft CITT: 0	High Idle rpm (governed): 1,920
Notes:			

Parameters	Rated Power	Peak Torque
Torque (lb-ft)	1,049	1,394
Speed (rpm)	1,798	1,200
Power (bhp)	358.0	317.0
Fuel Flow (lb/hr)	113.1	104.1
Water Out (°F)	193.0	194
Water In (°F)	161	161
Oil (°F)	217	218
Inlet Air (°F)	69.0	69
Fuel (°F)	93	89
Exhaust (°F)	823	983
Intercooler In (°F)	271	263
Intercooler Out (°F)	110	100
IC Coolant Supply (°F)	72.0	71.0
Inlet Air Dewpoint (°F)	55.1	55.5
Chiller Water (°F)	54.8	54.9
Barometer ("Hg)	29.05	29.05
Inlet Air Restriction ("H2O)	-16.2	-7.60
Exhaust Restriction ("Hg)	2.7	1.60
Boost Pres. Before IC ("Hg)	38.80	35.50
Boost Pres. After IC ("Hg)	35.2	33.9
Intercooler ÐP ("H2O)	49.0	21.8
Oil Pressure (psig)	50.0	45.0
Fuel Pressure (psig)	37.0	38.0
Engine Water Pres. (psig)		
Hour Meter (hours)	730.6	730.6

SwRI - Department of Emissions Research
FORM 07-001A

03/05/2006

3-11959-001
Project Number

2-21-06-PM2
Test Number

POWER MAP
HEAVY-DUTY DIESEL ENGINE

Date: 02/21/2006 Time: 2.20	Engine Model: S-60		
Cell No.: 11	Serial No. or ID: 06R0038671		
Operator: KH	Hour Meter: 730.6	Dura. Hours:	0.00
Project Leader: Robert Fanick	Fuel Code: EM-5785-F	Baro., "Hg:	29.05

MAP PRECONDITIONING

Parameter	Rated Speed	RatedTorque
Power (bhp)	358.00	317.00
Torque (lb-ft)	1,049.00	1,394.00
Speed (rpm)	1,798.00	1,200.00
Fuel Flow (lb/hr)	113.10	104.10
Inlet Air Restriction ("H2O)	-16.20	-7.60
Exhaust Restriction ("Hg)	2.70	1.60
Intake Air (°F)	69.00	69.00
Intake Air Dewpoint (°F)	55.10	55.50
ÐP Across Intercooler ("H2O)	48.96	21.76
Temperature After Intercooler (°F)	110.00	100.00

Map @ [X] 8 rpm/sec sweep [ ] Other: Idle Speed, rpm Low: 600 High: 1,920

RESULTS

Speed, rpm	Torque lb-ft	Speed, rpm	Torque lb-ft	Speed, rpm	Torque lb-ft	Speed, rpm	Torque lb-ft
100		1100	1,191	2100		3100	
200		1200	1,398	2200		3200	
300		1300	1,334	2300		3300	
400		1400	1,259	2400		3400	
500	575	1500	1,195	2500		3500	
600	610	1600	1,159	2600		3600	
700	640	1700	1,108	2700		3700	
800	719	1800	1,044	2800		3800	
900	866	1900		2900		3900	
1000	1,044	2000		3000		4000	

Speed Ramp Rate 7.5 rpm/sec RATED SPEED, rpm: Manufacturer 1,800 Measured 1,718

Calculated Maximum Speed = 1.13*[Highest RATED SPEED - Curb Idle Speed] + Curb Idle Speed = 1,956 rpm

TRANSIENT CYCLE INPUTS

CITT: 0 lb-ft

Idle Speed: 600 rpm Rated Speed 1,800 rpm Max. Power 362.0 hp Max. Torque 1,413 lb-ft

APPENDIX B

TRANSIENT REGULATED EMISSIONS DATA FOR A 1991 DETROIT DIESEL SERIES 60 RUNNING WITH A REFERENCE FUEL AND WITH SFA® 116-4509 FUEL ADDITIVE FROM SFA INTERNATIONAL, INC.

Southwest Research Institute - Department of Emissions Research
EPA Hot Transient Emission Test Results
Project No. 3-11959-001

Engine Model:	1991 Detroit Diesel S60	Test No.: R1		DIESEL 2D, EM-5504-F	
Engine Desc.:	12.7 L (775 CID) 6	Date: 02/16/2006	Time: 10:25	HCR: 1.940	FID Resp: 1.00
Engine Cycle:	Diesel	Program HDT: 4.12-R		H= 0.140 C= 0.860 O= 0.000 X= 0.000	
Engine S/N:	06R0038671	Cell: 11	Bag Cart: 2		

Ambient/Test Cell Conditions

Barometer:	29.04	in Hg	98.3 kPa
Engine Inlet Air			
Temperature:	73.0	°F	22.8 °C
Dew Point:	61.9	°F	16.6 °C
Abs. Humidity:	85.6	gr/lb	12.2 g/kg
Rel. Humidity:	68	%	
Dilution Air:			
Temperature:	71.0	°F	21.7 °C
Abs. Humidity	80.5	gr/lb	11.5 g/kg
Rel. Humidity:	69	%	

Measured Gaseous Data

	Meter	Range	Concentration		
HC Sample	n/a		4.75	ppm	
HC Bckgrd	n/a		3.80	ppm	
CO Sample	45.5	2	44.01	ppm	(Dry)
CO Bckgrd	0.2	2	0.19	ppm	
NOx Sample	n/a		45.92	ppm	(Dry)
NOx Bckgrd	1.4	1	0.35	ppm	
CO2 Sample	72.6	1	0.6171	%	(Wet)
CO2 Bckgrd	9.2	1	0.0524	%	

Corrected Concentrations

HC	1.13	ppm
CO	42.32	ppm
NOx	44.48	ppm
CO2	0.5672	%

Mass Emissions

HC	0.827	grams		
CO	62.228	grams		
NOx	110.488	grams		
Particulate	4.367	grams		
CO2	13.104	kg		
Fuel	9.24 lb		4.19 kg	

Sample Flows

	scfm	scmm
Blower 1 Rate:	2,216.5	62.77
Blower 2 Rate:	0.0	0.00
90 mm System:		
Gas Meter 1:	1.91	0.05
Gas Meter 2:	3.56	0.10
Sample Rate:	1.65	0.05
Total Flow Rate:	2,218.17	62.82

Particulate Data

Filter Number:	4384.0 (pair)	
Weight Gain:	3.258	mg
Sample Multiplier:	1.340	

Correction Factors

NOx Humidity CF:	1.028
Dry-to-Wet CF, Sample:	0.976
Dry-to-Wet CF, Bckgrd:	0.982
Dilution Factor:	21.29

Test Cycle Data

Sample Time:	1,206.30	sec		
Work:	24.13	hp-hr	17.99	kW-hr
Reference Work:	23.93	hp-hr	17.84	kW-hr
Total Volume (Vmix):	44,596.2	scf	1,262.99	scm

Brake-Specific Emission Results

BSHC (Cell)	0.034	g/hp-hr	0.046	g/kW-hr
CO	2.579	g/hp-hr	3.458	g/kW-hr
NOx (Cell)	4.579	g/hp-hr	6.140	g/kW-hr
Particulate	0.181	g/hp-hr	0.243	g/kW-hr
CO2	543.1	g/hp-hr	728.28	g/kW-hr
BSFC	0.383	lb/hp-hr	0.233	kg/kW-hr

Southwest Research Institute - Department of Emissions Research
EPA Hot Transient Emission Test Results
Project No. 3-11959-001

Engine Model:	1991 Detroit Diesel S60	Test No.: R2		DIESEL 2D, EM-5504-F	
Engine Desc.:	12.7 L (775 CID) 6	Date: 02/16/2006	Time: 11:05	HCR: 1.940	FID Resp: 1.00
Engine Cycle:	Diesel	Program HDT:	4.12-R	H= 0.140 C= 0.860 O= 0.000 X= 0.000	
Engine S/N:	06R0038671	Cell: 11	Bag Cart: 2		

Ambient/Test Cell Conditions

Barometer:	29.04	in Hg	98.3 kPa
Engine Inlet Air			
Temperature:	73.0	°F	22.8 °C
Dew Point:	62.2	°F	16.8 °C
Abs. Humidity:	86.6	gr/lb	12.4 g/kg
Rel. Humidity:	69	%	
Dilution Air:			
Temperature:	74.0	°F	23.3 °C
Abs. Humidity	75.4	gr/lb	10.8 g/kg
Rel. Humidity:	58	%	

Measured Gaseous Data

	Meter	Range	Concentration		
HC Sample	n/a		4.84	ppm	
HC Bckgrd	n/a		4.20	ppm	
CO Sample	45.7	2	44.21	ppm	(Dry)
CO Bckgrd	0.6	2	0.57	ppm	
NOx Sample	n/a		46.23	ppm	(Dry)
NOx Bckgrd	1.4	1	0.35	ppm	
CO2 Sample	72.0	1	0.6093	%	(Wet)
CO2 Bckgrd	9.4	1	0.0536	%	

Corrected Concentrations

HC	0.83	ppm
CO	42.31	ppm
NOx	44.84	ppm
CO2	0.5582	%

Mass Emissions

HC	0.621	grams		
CO	63.138	grams		
NOx	113.306	grams		
Particulate	4.424	grams		
CO2	13.088	kg		
Fuel	9.23 lb		4.19	kg

Sample Flows

	scfm	scmm
Blower 1 Rate:	2,249.7	63.71
Blower 2 Rate:	0.0	0.00
90 mm System:		
Gas Meter 1:	1.90	0.05
Gas Meter 2:	3.55	0.10
Sample Rate:	1.65	0.05
Total Flow Rate:	2,251.35	63.76

Particulate Data

Filter Number:	4385.0-, (pair)	
Weight Gain:	3.240	mg
Sample Multiplier:	1.365	

Correction Factors

NOx Humidity CF:	1.031
Dry-to-Wet CF, Sample:	0.977
Dry-to-Wet CF, Bckgrd:	0.983
Dilution Factor:	21.56

Test Cycle Data

Sample Time:	1,206.10	sec		
Work:	23.99	hp-hr	17.89	kW-hr
Reference Work:	23.93	hp-hr	17.84	kW-hr
Total Volume (Vmix):	45,256.0	scf	1,281.68	scm

Brake-Specific Emission Results

BSHC (Cell)	0.026	g/hp-hr	0.035	g/kW-hr
CO	2.632	g/hp-hr	3.529	g/kW-hr
NOx (Cell)	4.723	g/hp-hr	6.334	g/kW-hr
Particulate	0.184	g/hp-hr	0.247	g/kW-hr
CO2	545.6	g/hp-hr	731.60	g/kW-hr
BSFC	0.385	lb/hp-hr	0.234	kg/kW-hr

Southwest Research Institute - Department of Emissions Research
EPA Hot Transient Emission Test Results
Project No. 3-11959-001

Engine Model:	1991 Detroit Diesel S60	Test No.: R3		DIESEL 2D, EM-5504-F	
Engine Desc.:	12.7 L (775 CID) 6	Date: 02/16/2006	Time: 11:45	HCR: 1.940	FID Resp: 1.00
Engine Cycle:	Diesel	Program HDT: 4.12-R		H= 0.140 C= 0.860 O= 0.000 X= 0.000	
Engine S/N:	06R0038671	Cell: 11	Bag Cart: 2		

Ambient/Test Cell Conditions

Barometer:	29.03	in Hg	98.3 kPa
Engine Inlet Air			
Temperature:	73.0	°F	22.8 °C
Dew Point:	61.9	°F	16.6 °C
Abs. Humidity:	85.7	gr/lb	12.2 g/kg
Rel. Humidity:	68	%	
Dilution Air:			
Temperature:	68.0	°F	20.0 °C
Abs. Humidity	85.6	gr/lb	12.2 g/kg
Rel. Humidity:	81	%	

Measured Gaseous Data

	Meter	Range	Concentration		
HC Sample	n/a		4.93	ppm	
HC Bckgrd	n/a		4.10	ppm	
CO Sample	45.7	2	44.21	ppm	(Dry)
CO Bckgrd	0.3	2	0.29	ppm	
NOx Sample	n/a		45.94	ppm	(Dry)
NOx Bckgrd	1.4	1	0.35	ppm	
CO2 Sample	71.8	1	0.6067	%	(Wet)
CO2 Bckgrd	9.1	1	0.0518	%	

Corrected Concentrations

HC	1.02	ppm
CO	42.26	ppm
NOx	44.45	ppm
CO2	0.5573	%

Mass Emissions

HC		0.751	grams	
CO		62.444	grams	
NOx		110.976	grams	
Particulate		4.394	grams	
CO2		12.941	kg	
Fuel	9.13 lb		4.14	kg

Sample Flows

	scfm	scmm
Blower 1 Rate:	2,227.4	63.08
Blower 2 Rate:	0.0	0.00
90 mm System:		
Gas Meter 1:	1.91	0.05
Gas Meter 2:	3.56	0.10
Sample Rate:	1.66	0.05
Total Flow Rate:	2,229.02	63.13

Particulate Data

Filter Number:	4386.0 (pair)	
Weight Gain:	3.268	mg
Sample Multiplier:	1.345	

Correction Factors

NOx Humidity CF:	1.029
Dry-to-Wet CF, Sample:	0.975
Dry-to-Wet CF, Bckgrd:	0.981
Dilution Factor:	21.65

Test Cycle Data

Sample Time:	1,206.40	sec		
Work:	24.06	hp-hr	17.94	kW-hr
Reference Work:	23.93	hp-hr	17.84	kW-hr
Total Volume (Vmix):	44,818.2	scf	1,269.28	scm

Brake-Specific Emission Results

BSHC (Cell)	0.031	g/hp-hr	0.042	g/kW-hr
CO	2.595	g/hp-hr	3.480	g/kW-hr
NOx (Cell)	4.612	g/hp-hr	6.185	g/kW-hr
Particulate	0.183	g/hp-hr	0.245	g/kW-hr
CO2	537.8	g/hp-hr	721.26	g/kW-hr
BSFC	0.379	lb/hp-hr	0.231	kg/kW-hr

Southwest Research Institute - Department of Emissions Research
EPA Hot Transient Emission Test Results
Project No. 3-11959-001

Engine Model:	1991 Detroit Diesel S60	Test No.: R4		DIESEL 2D, EM-5504-F	
Engine Desc.:	12.7 L (775 CID) 6	Date: 02/16/2006	Time: 12:25	HCR: 1.940	FID Resp: 1.00
Engine Cycle:	Diesel	Program HDT: 4.12-R		H= 0.140 C= 0.860 O= 0.000 X= 0.000	
Engine S/N:	06R0038671	Cell: 11	Bag Cart: 2		

Ambient/Test Cell Conditions

Barometer:	29.01	in Hg	98.2 kPa
Engine Inlet Air			
Temperature:	74.0	°F	23.3 °C
Dew Point:	62.5	°F	16.9 °C
Abs. Humidity:	87.6	gr/lb	12.5 g/kg
Rel. Humidity:	67	%	
Dilution Air:			
Temperature:	70.0	°F	21.1 °C
Abs. Humidity	82.3	gr/lb	11.8 g/kg
Rel. Humidity:	72	%	

Measured Gaseous Data

	Meter	Range	Concentration		
HC Sample	n/a		4.92	ppm	
HC Bckgrd	n/a		2.50	ppm	
CO Sample	45.6	2	44.11	ppm	(Dry)
CO Bckgrd	n/a	2	0.00	ppm	
NOx Sample	n/a		45.70	ppm	(Dry)
NOx Bckgrd	1.3	1	0.33	ppm	
CO2 Sample	71.7	1	0.6054	%	(Wet)
CO2 Bckgrd	9.1	1	0.0518	%	

Corrected Concentrations

HC	2.54	ppm
CO	42.55	ppm
NOx	44.27	ppm
CO2	0.5560	%

Mass Emissions

HC		1.861	grams	
CO		62.633	grams	
NOx		110.670	grams	
Particulate		4.138	grams	
CO2		12.860	kg	
Fuel	9.07 lb		4.11	kg

Sample Flows

	scfm	scmm
Blower 1 Rate:	2,219.1	62.85
Blower 2 Rate:	0.0	0.00
90 mm System:		
Gas Meter 1:	1.90	0.05
Gas Meter 2:	3.58	0.10
Sample Rate:	1.68	0.05
Total Flow Rate:	2,220.79	62.89

Particulate Data

Filter Number:	4387.0- (pair)	
Weight Gain:	3.132	mg
Sample Multiplier:	1.321	

Correction Factors

NOx Humidity CF:	1.034
Dry-to-Wet CF, Sample:	0.976
Dry-to-Wet CF, Bckgrd:	0.981
Dilution Factor:	21.70

Test Cycle Data

Sample Time:	1,206.20	sec		
Work:	24.03	hp-hr	17.92	kW-hr
Reference Work:	23.93	hp-hr	17.84	kW-hr
Total Volume (Vmix):	44,645.2	scf	1,264.38	scm

Brake-Specific Emission Results

BSHC (Cell)	0.077	g/hp-hr	0.104	g/kW-hr
CO	2.606	g/hp-hr	3.495	g/kW-hr
NOx (Cell)	4.605	g/hp-hr	6.176	g/kW-hr
Particulate	0.172	g/hp-hr	0.231	g/kW-hr
CO2	535.2	g/hp-hr	717.69	g/kW-hr
BSFC	0.378	lb/hp-hr	0.230	kg/kW-hr

Southwest Research Institute - Department of Emissions Research
EPA Hot Transient Emission Test Results
Project No. 3-11959-001

Engine Model:	1991 Detroit Diesel S60	Test No.: R5		DIESEL 2D, EM-5504-F	
Engine Desc.:	12.7 L (775 CID) 6	Date: 02/16/2006	Time: 01:05	HCR: 1.940	FID Resp: 1.00
Engine Cycle:	Diesel	Program HDT:	4.12-R	H= 0.140 C= 0.860 O= 0.000 X= 0.000	
Engine S/N:	06R0038671	Cell: 11	Bag Cart: 2		

Ambient/Test Cell Conditions

Barometer:	29.00	in Hg	98.2 kPa
Engine Inlet Air			
Temperature:	75.0	°F	23.9 °C
Dew Point:	62.4	°F	16.9 °C
Abs. Humidity:	87.3	gr/lb	12.5 g/kg
Rel. Humidity:	65	%	
Dilution Air:			
Temperature:	72.0	°F	22.2 °C
Abs. Humidity	74.0	gr/lb	10.6 g/kg
Rel. Humidity:	61	%	

Measured Gaseous Data

	Meter	Range	Concentration		
HC Sample	n/a		5.39	ppm	
HC Bckgrd	n/a		4.70	ppm	
CO Sample	45.6	2	44.11	ppm	(Dry)
CO Bckgrd	n/a	2	0.00	ppm	
NOx Sample	n/a		45.97	ppm	(Dry)
NOx Bckgrd	1.4	1	0.35	ppm	
CO2 Sample	72.0	1	0.6093	%	(Wet)
CO2 Bckgrd	9.1	1	0.0518	%	

Corrected Concentrations

HC	0.91	ppm
CO	42.71	ppm
NOx	44.60	ppm
CO2	0.5599	%

Mass Emissions

HC	0.668	grams
CO	63.030	grams
NOx	111.687	grams
Particulate	4.437	grams
CO2	12.984	kg
Fuel	9.16 lb	4.15 kg

Sample Flows

	scfm	scmm
Blower 1 Rate:	2,224.6	63.00
Blower 2 Rate:	0.0	0.00
90 mm System:		
Gas Meter 1:	1.90	0.05
Gas Meter 2:	3.54	0.10
Sample Rate:	1.64	0.05
Total Flow Rate:	2,226.28	63.05

Particulate Data

Filter Number:	4388.0 (pair)	
Weight Gain:	3.272	mg
Sample Multiplier:	1.356	

Correction Factors

NOx Humidity CF:	1.033
Dry-to-Wet CF, Sample:	0.977
Dry-to-Wet CF, Bckgrd:	0.983
Dilution Factor:	21.56

Test Cycle Data

Sample Time:	1,206.30	sec		
Work:	23.98	hp-hr	17.88	kW-hr
Reference Work:	23.93	hp-hr	17.84	kW-hr
Total Volume (Vmix):	44,759.4	scf	1,267.61	scm

Brake-Specific Emission Results

BSHC (Cell)	0.028	g/hp-hr	0.037	g/kW-hr
CO	2.628	g/hp-hr	3.525	g/kW-hr
NOx (Cell)	4.658	g/hp-hr	6.246	g/kW-hr
Particulate	0.185	g/hp-hr	0.248	g/kW-hr
CO2	541.5	g/hp-hr	726.10	g/kW-hr
BSFC	0.382	lb/hp-hr	0.232	kg/kW-hr

Southwest Research Institute - Department of Emissions Research
EPA Hot Transient Emission Test Results
Project No. 3-11959-001

Engine Model:	1991 Detroit Diesel S60	Test No.:	R6	DIESEL 2D, EM-5504-F	
Engine Desc.:	12.7 L (775 CID) 6	Date: 02/16/2006	Time: 01:45	HCR: 1.940	FID Resp: 1.00
Engine Cycle:	Diesel	Program HDT:	4.12-R	H= 0.140 C= 0.860 O= 0.000 X= 0.000	
Engine S/N:	06R0038671	Cell: 11	Bag Cart: 2		

Ambient/Test Cell Conditions

Barometer:	28.98	in Hg	98.1 kPa
Engine Inlet Air			
Temperature:	77.0	°F	25.0 °C
Dew Point:	63.0	°F	17.2 °C
Abs. Humidity:	89.3	gr/lb	12.8 g/kg
Rel. Humidity:	62	%	
Dilution Air:			
Temperature:	75.0	°F	23.9 °C
Abs. Humidity	73.9	gr/lb	10.6 g/kg
Rel. Humidity:	55	%	

Measured Gaseous Data

	Meter	Range	Concentration		
HC Sample	n/a		5.48	ppm	
HC Bckgrd	n/a		4.30	ppm	
CO Sample	46.8	2	45.28	ppm	(Dry)
CO Bckgrd	0.5	2	0.48	ppm	
NOx Sample	n/a		46.84	ppm	(Dry)
NOx Bckgrd	2.0	1	0.50	ppm	
CO2 Sample	71.9	1	0.6080	%	(Wet)
CO2 Bckgrd	9.5	1	0.0542	%	

Corrected Concentrations

HC	1.38	ppm
CO	43.48	ppm
NOx	45.30	ppm
CO2	0.5563	%

Mass Emissions

HC		1.007	grams	
CO		63.677	grams	
NOx		113.192	grams	
Particulate		4.407	grams	
CO2		12.802	kg	
Fuel	9.03 lb		4.10	kg

Sample Flows

	scfm	scmm
Blower 1 Rate:	2,207.4	62.52
Blower 2 Rate:	0.0	0.00
90 mm System:		
Gas Meter 1:	1.91	0.05
Gas Meter 2:	3.56	0.10
Sample Rate:	1.65	0.05
Total Flow Rate:	2,209.06	62.56

Particulate Data

Filter Number:	4389.0 (pair)	
Weight Gain:	3.294	mg
Sample Multiplier:	1.338	

Correction Factors

NOx Humidity CF:	1.039
Dry-to-Wet CF, Sample:	0.977
Dry-to-Wet CF, Bckgrd:	0.983
Dilution Factor:	21.60

Test Cycle Data

Sample Time:	1,206.40	sec		
Work:	23.93	hp-hr	17.84	kW-hr
Reference Work:	23.93	hp-hr	17.84	kW-hr
Total Volume (Vmix):	44,416.9	scf	1,257.91	scm

Brake-Specific Emission Results

BSHC (Cell)	0.042	g/hp-hr	0.056	g/kW-hr
CO	2.661	g/hp-hr	3.568	g/kW-hr
NOx (Cell)	4.730	g/hp-hr	6.343	g/kW-hr
Particulate	0.184	g/hp-hr	0.247	g/kW-hr
CO2	535.0	g/hp-hr	717.42	g/kW-hr
BSFC	0.377	lb/hp-hr	0.230	kg/kW-hr

Southwest Research Institute - Department of Emissions Research
EPA Hot Transient Emission Test Results
Project No. 3-11959-001

Engine Model:	1991 Detroit Diesel S60	Test No.: C7		DIESEL 2D, EM-5845-F	
Engine Desc.:	12.7 L (775 CID) 6	Date: 02/20/2006	Time: 01:35	HCR: 1.940	FID Resp: 1.00
Engine Cycle:	Diesel	Program HDT:	4.12-R	H= 0.140 C= 0.860 O= 0.000 X= 0.000	
Engine S/N:	06R0038671	Cell: 11	Bag Cart: 2		

Ambient/Test Cell Conditions

Barometer:	29.22	in Hg	98.9 kPa
Engine Inlet Air			
Temperature:	68.0	°F	20.0 °C
Dew Point:	46.1	°F	7.8 °C
Abs. Humidity:	47.3	gr/lb	6.8 g/kg
Rel. Humidity:	45	%	
Dilution Air:			
Temperature:	69.0	°F	20.6 °C
Abs. Humidity	55.5	gr/lb	7.9 g/kg
Rel. Humidity:	51	%	

Measured Gaseous Data

	Meter	Range	Concentration		
HC Sample	n/a		5.74	ppm	
HC Bckgrd	n/a		4.10	ppm	
CO Sample	50.2	2	48.63	ppm	(Dry)
CO Bckgrd	1.4	2	1.34	ppm	
NOx Sample	n/a		48.69	ppm	(Dry)
NOx Bckgrd	1.6	1	0.40	ppm	
CO2 Sample	71.9	1	0.6080	%	(Wet)
CO2 Bckgrd	10.2	1	0.0584	%	

Corrected Concentrations

HC	1.83	ppm
CO	45.99	ppm
NOx	47.41	ppm
CO2	0.5523	%

Mass Emissions

HC	1.348	grams		
CO	67.950	grams		
NOx	107.354	grams		
Particulate	4.932	grams		
CO2	12.825	kg		
Fuel	9.05 lb		4.11	kg

Sample Flows

	scfm	scmm
Blower 1 Rate:	2,227.3	63.08
Blower 2 Rate:	0.0	0.00
90 mm System:		
Gas Meter 1:	2.02	0.06
Gas Meter 2:	3.72	0.11
Sample Rate:	1.69	0.05
Total Flow Rate:	2,229.01	63.13

Particulate Data

Filter Number:	4677.0 (pair)	
Weight Gain:	3.750	mg
Sample Multiplier:	1.315	

Correction Factors

NOx Humidity CF:	0.933
Dry-to-Wet CF, Sample:	0.982
Dry-to-Wet CF, Bckgrd:	0.987
Dilution Factor:	21.59

Test Cycle Data

Sample Time:	1,206.40	sec		
Work:	23.18	hp-hr	17.29	kW-hr
Reference Work:	23.93	hp-hr	17.84	kW-hr
Total Volume (Vmix):	44,817.9	scf	1,269.27	scm

Brake-Specific Emission Results

BSHC (Cell)	0.058	g/hp-hr	0.078	g/kW-hr
CO	2.931	g/hp-hr	3.931	g/kW-hr
NOx (Cell)	4.631	g/hp-hr	6.211	g/kW-hr
Particulate	0.213	g/hp-hr	0.285	g/kW-hr
CO2	553.3	g/hp-hr	741.94	g/kW-hr
BSFC	0.391	lb/hp-hr	0.238	kg/kW-hr

Southwest Research Institute - Department of Emissions Research
EPA Hot Transient Emission Test Results
Project No. 3-11959-001

Engine Model:	1991 Detroit Diesel S60	Test No.: C8		DIESEL 2D, EM-5845-F	
Engine Desc.:	12.7 L (775 CID) 6	Date: 02/20/2006	Time: 02:15	HCR: 1.940	FID Resp: 1.00
Engine Cycle:	Diesel	Program HDT:	4.12-R	H= 0.140 C= 0.860 O= 0.000 X= 0.000	
Engine S/N:	06R0038671	Cell: 11	Bag Cart: 2		

Ambient/Test Cell Conditions

Barometer:	29.20	in Hg	98.9 kPa
Engine Inlet Air			
Temperature:	70.0	°F	21.1 °C
Dew Point:	47.6	°F	8.7 °C
Abs. Humidity:	50.2	gr/lb	7.2 g/kg
Rel. Humidity:	45	%	
Dilution Air:			
Temperature:	70.0	°F	21.1 °C
Abs. Humidity	62.7	gr/lb	9.0 g/kg
Rel. Humidity:	56	%	

Measured Gaseous Data

	Meter	Range	Concentration		
HC Sample	n/a		5.66	ppm	
HC Bckgrd	n/a		4.10	ppm	
CO Sample	50.2	2	48.63	ppm	(Dry)
CO Bckgrd	2.0	2	1.91	ppm	
NOx Sample	n/a		48.69	ppm	(Dry)
NOx Bckgrd	1.2	1	0.30	ppm	
CO2 Sample	71.4	1	0.6015	%	(Wet)
CO2 Bckgrd	9.3	1	0.0530	%	

Corrected Concentrations

HC	1.75	ppm
CO	45.39	ppm
NOx	47.43	ppm
CO2	0.5509	%

Mass Emissions

HC		1.285	grams	
CO		66.918	grams	
NOx		107.903	grams	
Particulate		5.246	grams	
CO2		12.765	kg	
Fuel	9.01 lb		4.09	kg

Sample Flows

	scfm	scmm
Blower 1 Rate:	2,223.1	62.96
Blower 2 Rate:	0.0	0.00
90 mm System:		
Gas Meter 1:	2.08	0.06
Gas Meter 2:	3.67	0.10
Sample Rate:	1.59	0.05
Total Flow Rate:	2,224.67	63.00

Particulate Data

Filter Number:	4678.0 (pair)	
Weight Gain:	3.756	mg
Sample Multiplier:	1.397	

Correction Factors

NOx Humidity CF:	0.939
Dry-to-Wet CF, Sample:	0.980
Dry-to-Wet CF, Bckgrd:	0.986
Dilution Factor:	21.82

Test Cycle Data

Sample Time:	1,206.10	sec		
Work:	23.15	hp-hr	17.26	kW-hr
Reference Work:	23.93	hp-hr	17.84	kW-hr
Total Volume (Vmix):	44,719.6	scf	1,266.49	scm

Brake-Specific Emission Results

BSHC (Cell)	0.056	g/hp-hr	0.074	g/kW-hr
CO	2.891	g/hp-hr	3.876	g/kW-hr
NOx (Cell)	4.661	g/hp-hr	6.251	g/kW-hr
Particulate	0.227	g/hp-hr	0.304	g/kW-hr
CO2	551.4	g/hp-hr	739.42	g/kW-hr
BSFC	0.389	lb/hp-hr	0.237	kg/kW-hr

Southwest Research Institute - Department of Emissions Research
EPA Hot Transient Emission Test Results
Project No. 3-11959-001

Engine Model:	1991 Detroit Diesel S60	Test No.:	C9	DIESEL 2D, EM-5845-F	
Engine Desc.:	12.7 L (775 CID) 6	Date: 02/20/2006	Time: 02:55	HCR: 1.940	FID Resp: 1.00
Engine Cycle:	Diesel	Program HDT:	4.12-R	H= 0.140 C= 0.860 O= 0.000 X= 0.000	
Engine S/N:	06R0038671	Cell: 11	Bag Cart: 2		

Ambient/Test Cell Conditions

Barometer:	29.19	in Hg	98.8 kPa
Engine Inlet Air			
Temperature:	68.0	°F	20.0 °C
Dew Point:	47.9	°F	8.8 °C
Abs. Humidity:	50.8	gr/lb	7.3 g/kg
Rel. Humidity:	49	%	
Dilution Air:			
Temperature:	70.0	°F	21.1 °C
Abs. Humidity	62.8	gr/lb	9.0 g/kg
Rel. Humidity:	56	%	

Measured Gaseous Data

	Meter	Range	Concentration		
HC Sample	n/a		6.05	ppm	
HC Bckgrd	n/a		4.40	ppm	
CO Sample	50.3	2	48.72	ppm	(Dry)
CO Bckgrd	1.1	2	1.05	ppm	
NOx Sample	n/a		48.99	ppm	(Dry)
NOx Bckgrd	1.0	1	0.25	ppm	
CO2 Sample	71.6	1	0.6041	%	(Wet)
CO2 Bckgrd	9.6	1	0.0548	%	

Corrected Concentrations

HC	1.85	ppm
CO	46.28	ppm
NOx	47.77	ppm
CO2	0.5518	%

Mass Emissions

HC	1.362	grams		
CO	68.231	grams		
NOx	108.833	grams		
Particulate	5.075	grams		
CO2	12.785	kg		
Fuel	9.03 lb		4.09	kg

Sample Flows

	scfm	scmm
Blower 1 Rate:	2,222.3	62.94
Blower 2 Rate:	0.0	0.00
90 mm System:		
Gas Meter 1:	1.96	0.06
Gas Meter 2:	3.55	0.10
Sample Rate:	1.59	0.04
Total Flow Rate:	2,223.91	62.98

Particulate Data

Filter Number:	4679.0 (pair)	
Weight Gain:	3.623	mg
Sample Multiplier:	1.401	

Correction Factors

NOx Humidity CF:	0.941
Dry-to-Wet CF, Sample:	0.980
Dry-to-Wet CF, Bckgrd:	0.986
Dilution Factor:	21.72

Test Cycle Data

Sample Time:	1,206.50	sec		
Work:	23.17	hp-hr	17.28	kW-hr
Reference Work:	23.93	hp-hr	17.84	kW-hr
Total Volume (Vmix):	44,719.2	scf	1,266.47	scm

Brake-Specific Emission Results

BSHC (Cell)	0.059	g/hp-hr	0.079	g/kW-hr
CO	2.945	g/hp-hr	3.949	g/kW-hr
NOx (Cell)	4.697	g/hp-hr	6.299	g/kW-hr
Particulate	0.219	g/hp-hr	0.294	g/kW-hr
CO2	551.8	g/hp-hr	739.97	g/kW-hr
BSFC	0.390	lb/hp-hr	0.237	kg/kW-hr

Southwest Research Institute - Department of Emissions Research
EPA Hot Transient Emission Test Results
Project No. 3-11959-001

Engine Model:	1991 Detroit Diesel S60	Test No.: C10		DIESEL 2D, EM-5845-F	
Engine Desc.:	12.7 L (775 CID) 6	Date: 02/20/2006	Time: 03:35	HCR: 1.940	FID Resp: 1.00
Engine Cycle:	Diesel	Program HDT:	4.12-R	H= 0.140 C= 0.860 O= 0.000 X= 0.000	
Engine S/N:	06R0038671	Cell: 11	Bag Cart: 2		

Ambient/Test Cell Conditions

Barometer:	29.18	in Hg	98.8 kPa
Engine Inlet Air			
Temperature:	69.0	°F	20.6 °C
Dew Point:	47.2	°F	8.4 °C
Abs. Humidity:	49.4	gr/lb	7.1 g/kg
Rel. Humidity:	46	%	
Dilution Air:			
Temperature:	72.0	°F	22.2 °C
Abs. Humidity	59.4	gr/lb	8.5 g/kg
Rel. Humidity:	49	%	

Measured Gaseous Data

	Meter	Range	Concentration		
HC Sample	n/a		5.93	ppm	
HC Bckgrd	n/a		4.30	ppm	
CO Sample	50.1	2	48.53	ppm	(Dry)
CO Bckgrd	1.3	2	1.24	ppm	
NOx Sample	n/a		48.11	ppm	(Dry)
NOx Bckgrd	0.9	1	0.23	ppm	
CO2 Sample	71.4	1	0.6015	%	(Wet)
CO2 Bckgrd	9.6	1	0.0548	%	

Corrected Concentrations

HC	1.83	ppm
CO	46.02	ppm
NOx	46.96	ppm
CO2	0.5492	%

Mass Emissions

HC	1.342	grams		
CO	67.794	grams		
NOx	106.573	grams		
Particulate	5.094	grams		
CO2	12.715	kg		
Fuel	8.98	lb	4.07	kg

Sample Flows

	scfm	scmm
Blower 1 Rate:	2,221.0	62.90
Blower 2 Rate:	0.0	0.00
90 mm System:		
Gas Meter 1:	1.96	0.06
Gas Meter 2:	3.55	0.10
Sample Rate:	1.59	0.05
Total Flow Rate:	2,222.64	62.95

Particulate Data

Filter Number:	4680.0 (pair)	
Weight Gain:	3.651	mg
Sample Multiplier:	1.395	

Correction Factors

NOx Humidity CF:	0.938
Dry-to-Wet CF, Sample:	0.981
Dry-to-Wet CF, Bckgrd:	0.987
Dilution Factor:	21.82

Test Cycle Data

Sample Time:	1,206.30	sec		
Work:	23.09	hp-hr	17.22	kW-hr
Reference Work:	23.93	hp-hr	17.84	kW-hr
Total Volume (Vmix):	44,686.1	scf	1,265.54	scm

Brake-Specific Emission Results

BSHC (Cell)	0.058	g/hp-hr	0.078	g/kW-hr
CO	2.936	g/hp-hr	3.937	g/kW-hr
NOx (Cell)	4.616	g/hp-hr	6.190	g/kW-hr
Particulate	0.221	g/hp-hr	0.296	g/kW-hr
CO2	550.7	g/hp-hr	738.48	g/kW-hr
BSFC	0.389	lb/hp-hr	0.236	kg/kW-hr

Southwest Research Institute - Department of Emissions Research
EPA Hot Transient Emission Test Results
Project No. 3-11959-001

Engine Model:	1991 Detroit Diesel S60	Test No.: C11		DIESEL 2D, EM-5845-F	
Engine Desc.:	12.7 L (775 CID) 6	Date: 02/20/2006	Time: 04:15	HCR: 1.940	FID Resp: 1.00
Engine Cycle:	Diesel	Program HDT:	4.12-R	H= 0.140 C= 0.860 O= 0.000 X= 0.000	
Engine S/N:	06R0038671	Cell: 11	Bag Cart: 2		

Ambient/Test Cell Conditions

Barometer:	29.18	in Hg	98.8 kPa
Engine Inlet Air			
Temperature:	70.0	°F	21.1 °C
Dew Point:	51.3	°F	10.7 °C
Abs. Humidity:	57.7	gr/lb	8.2 g/kg
Rel. Humidity:	51	%	
Dilution Air:			
Temperature:	77.0	°F	25.0 °C
Abs. Humidity	60.3	gr/lb	8.6 g/kg
Rel. Humidity:	42	%	

Measured Gaseous Data

	Meter	Range	Concentration		
HC Sample	n/a		5.62	ppm	
HC Bckgrd	n/a		4.50	ppm	
CO Sample	48.0	2	46.46	ppm	(Dry)
CO Bckgrd	0.9	2	0.86	ppm	
NOx Sample	n/a		47.89	ppm	(Dry)
NOx Bckgrd	1.3	1	0.33	ppm	
CO2 Sample	71.5	1	0.6028	%	(Wet)
CO2 Bckgrd	9.7	1	0.0554	%	

Corrected Concentrations

HC	1.33	ppm
CO	44.46	ppm
NOx	46.64	ppm
CO2	0.5499	%

Mass Emissions

HC	0.979	grams		
CO	65.795	grams		
NOx	108.505	grams		
Particulate	5.020	grams		
CO2	12.788	kg		
Fuel	9.02	lb	4.09	kg

Sample Flows

	scfm	scmm
Blower 1 Rate:	2,230.7	63.17
Blower 2 Rate:	0.0	0.00
90 mm System:		
Gas Meter 1:	1.95	0.06
Gas Meter 2:	3.54	0.10
Sample Rate:	1.59	0.04
Total Flow Rate:	2,232.25	63.22

Particulate Data

Filter Number:	4681.0 (pair)	
Weight Gain:	3.565	mg
Sample Multiplier:	1.408	

Correction Factors

NOx Humidity CF:	0.957
Dry-to-Wet CF, Sample:	0.980
Dry-to-Wet CF, Bckgrd:	0.986
Dilution Factor:	21.78

Test Cycle Data

Sample Time:	1,206.40	sec		
Work:	23.14	hp-hr	17.26	kW-hr
Reference Work:	23.93	hp-hr	17.84	kW-hr
Total Volume (Vmix):	44,883.2	scf	1,271.12	scm

Brake-Specific Emission Results

BSHC (Cell)	0.042	g/hp-hr	0.057	g/kW-hr
CO	2.843	g/hp-hr	3.813	g/kW-hr
NOx (Cell)	4.689	g/hp-hr	6.288	g/kW-hr
Particulate	0.217	g/hp-hr	0.291	g/kW-hr
CO2	552.7	g/hp-hr	741.12	g/kW-hr
BSFC	0.390	lb/hp-hr	0.237	kg/kW-hr

Southwest Research Institute - Department of Emissions Research
EPA Hot Transient Emission Test Results
Project No. 3-11959-001

Engine Model:	1991 Detroit Diesel S60	Test No.: C12		DIESEL 2D, EM-5845-F	
Engine Desc.:	12.7 L (775 CID) 6	Date: 02/20/2006	Time: 04:55	HCR: 1.940	FID Resp: 1.00
Engine Cycle:	Diesel	Program HDT: 4.12-R		H= 0.140 C= 0.860 O= 0.000 X= 0.000	
Engine S/N:	06R0038671	Cell: 11	Bag Cart: 2		

Ambient/Test Cell Conditions

Barometer:	29.16	in Hg	98.7 kPa
Engine Inlet Air			
Temperature:	70.0	°F	21.1 °C
Dew Point:	49.0	°F	9.4 °C
Abs. Humidity:	53.0	gr/lb	7.6 g/kg
Rel. Humidity:	47	%	
Dilution Air:			
Temperature:	77.0	°F	25.0 °C
Abs. Humidity	51.2	gr/lb	7.3 g/kg
Rel. Humidity:	36	%	

Measured Gaseous Data

	Meter	Range	Concentration		
HC Sample	n/a		5.50	ppm	
HC Bckgrd	n/a		4.10	ppm	
CO Sample	49.5	2	47.94	ppm	(Dry)
CO Bckgrd	1.4	2	1.34	ppm	
NOx Sample	n/a		48.18	ppm	(Dry)
NOx Bckgrd	1.3	1	0.33	ppm	
CO2 Sample	71.6	1	0.6041	%	(Wet)
CO2 Bckgrd	9.4	1	0.0536	%	

Corrected Concentrations

HC	1.59	ppm
CO	45.55	ppm
NOx	47.02	ppm
CO2	0.5530	%

Mass Emissions

HC	1.168	grams		
CO	67.158	grams		
NOx	107.724	grams		
Particulate	4.949	grams		
CO2	12.812	kg		
Fuel	9.04	lb	4.10	kg

Sample Flows

	scfm	scmm
Blower 1 Rate:	2,222.6	62.95
Blower 2 Rate:	0.0	0.00
90 mm System:		
Gas Meter 1:	1.96	0.06
Gas Meter 2:	3.54	0.10
Sample Rate:	1.58	0.04
Total Flow Rate:	2,224.18	62.99

Particulate Data

Filter Number:	4682.0 (pair)	
Weight Gain:	3.513	mg
Sample Multiplier:	1.409	

Correction Factors

NOx Humidity CF:	0.946
Dry-to-Wet CF, Sample:	0.983
Dry-to-Wet CF, Bckgrd:	0.988
Dilution Factor:	21.73

Test Cycle Data

Sample Time:	1,206.40	sec		
Work:	23.17	hp-hr	17.28	kW-hr
Reference Work:	23.93	hp-hr	17.84	kW-hr
Total Volume (Vmix):	44,720.9	scf	1,266.52	scm

Brake-Specific Emission Results

BSHC (Cell)	0.050	g/hp-hr	0.068	g/kW-hr
CO	2.898	g/hp-hr	3.887	g/kW-hr
NOx (Cell)	4.649	g/hp-hr	6.235	g/kW-hr
Particulate	0.214	g/hp-hr	0.286	g/kW-hr
CO2	553.0	g/hp-hr	741.54	g/kW-hr
BSFC	0.390	lb/hp-hr	0.237	kg/kW-hr

Southwest Research Institute - Department of Emissions Research
EPA Hot Transient Emission Test Results
Project No. 3-11959-001

Engine Model:	1991 Detroit Diesel S60	Test No.: R13		DIESEL 2D, EM-5504-F	
Engine Desc.:	12.7 L (775 CID) 6	Date: 02/21/2006	Time: 10:10	HCR: 1.940	FID Resp: 1.00
Engine Cycle:	Diesel	Program HDT: 4.12-R		H= 0.140 C= 0.860 O= 0.000 X= 0.000	
Engine S/N:	06R0038671	Cell: 11	Bag Cart: 2		

Ambient/Test Cell Conditions

Barometer:	29.13	in Hg	98.6 kPa
Engine Inlet Air			
Temperature:	71.0	°F	21.7 °C
Dew Point:	52.0	°F	11.1 °C
Abs. Humidity:	59.4	gr/lb	8.5 g/kg
Rel. Humidity:	51	%	
Dilution Air:			
Temperature:	70.0	°F	21.1 °C
Abs. Humidity	62.9	gr/lb	9.0 g/kg
Rel. Humidity:	56	%	

Measured Gaseous Data

	Meter	Range	Concentration		
HC Sample	n/a		5.97	ppm	
HC Bckgrd	n/a		4.50	ppm	
CO Sample	45.9	2	44.40	ppm	(Dry)
CO Bckgrd	0.8	2	0.77	ppm	
NOx Sample	n/a		47.82	ppm	(Dry)
NOx Bckgrd	1.8	1	0.45	ppm	
CO2 Sample	71.2	1	0.5989	%	(Wet)
CO2 Bckgrd	10.1	1	0.0578	%	

Corrected Concentrations

HC	1.68	ppm
CO	42.35	ppm
NOx	46.43	ppm
CO2	0.5437	%

Mass Emissions

HC		1.232	grams	
CO		62.469	grams	
NOx		108.105	grams	
Particulate		4.509	grams	
CO2		12.603	kg	
Fuel	8.89 lb		4.03	kg

Sample Flows

	scfm	scmm
Blower 1 Rate:	2,223.4	62.97
Blower 2 Rate:	0.0	0.00
90 mm System:		
Gas Meter 1:	1.95	0.06
Gas Meter 2:	3.52	0.10
Sample Rate:	1.57	0.04
Total Flow Rate:	2,224.96	63.01

Particulate Data

Filter Number:	4683.0 (pair)	
Weight Gain:	3.176	mg
Sample Multiplier:	1.420	

Correction Factors

NOx Humidity CF:	0.961
Dry-to-Wet CF, Sample:	0.980
Dry-to-Wet CF, Bckgrd:	0.986
Dilution Factor:	21.93

Test Cycle Data

Sample Time:	1,206.40	sec		
Work:	23.13	hp-hr	17.25	kW-hr
Reference Work:	23.93	hp-hr	17.84	kW-hr
Total Volume (Vmix):	44,736.6	scf	1,266.97	scm

Brake-Specific Emission Results

BSHC (Cell)	0.053	g/hp-hr	0.071	g/kW-hr
CO	2.701	g/hp-hr	3.622	g/kW-hr
NOx (Cell)	4.674	g/hp-hr	6.268	g/kW-hr
Particulate	0.195	g/hp-hr	0.261	g/kW-hr
CO2	544.9	g/hp-hr	730.68	g/kW-hr
BSFC	0.384	lb/hp-hr	0.234	kg/kW-hr

Southwest Research Institute - Department of Emissions Research
EPA Hot Transient Emission Test Results
Project No. 3-11959-001

Engine Model:	1991 Detroit Diesel S60	Test No.: R14		DIESEL 2D, EM-5504-F	
Engine Desc.:	12.7 L (775 CID) 6	Date: 02/21/2006	Time: 10:50	HCR: 1.940	FID Resp: 1.00
Engine Cycle:	Diesel	Program HDT:	4.12-R	H= 0.140 C= 0.860 O= 0.000 X= 0.000	
Engine S/N:	06R0038671	Cell: 11	Bag Cart: 2		

Ambient/Test Cell Conditions

Barometer:	29.13	in Hg	98.6 kPa
Engine Inlet Air			
Temperature:	71.0	°F	21.7 °C
Dew Point:	52.6	°F	11.4 °C
Abs. Humidity:	60.7	gr/lb	8.7 g/kg
Rel. Humidity:	52	%	
Dilution Air:			
Temperature:	72.0	°F	22.2 °C
Abs. Humidity	73.6	gr/lb	10.5 g/kg
Rel. Humidity:	61	%	

Measured Gaseous Data

	Meter	Range	Concentration		
HC Sample	n/a		6.13	ppm	
HC Bckgrd	n/a		4.50	ppm	
CO Sample	44.1	2	42.64	ppm	(Dry)
CO Bckgrd	0.7	2	0.67	ppm	
NOx Sample	n/a		47.56	ppm	(Dry)
NOx Bckgrd	1.7	1	0.43	ppm	
CO2 Sample	70.5	1	0.5900	%	(Wet)
CO2 Bckgrd	10.1	1	0.0578	%	

Corrected Concentrations

HC	1.83	ppm
CO	40.68	ppm
NOx	46.09	ppm
CO2	0.5348	%

Mass Emissions

HC		1.342	grams	
CO		59.780	grams	
NOx		107.273	grams	
Particulate		4.578	grams	
CO2		12.351	kg	
Fuel	8.71 lb		3.95 kg	

Sample Flows

	scfm	scmm
Blower 1 Rate:	2,215.1	62.73
Blower 2 Rate:	0.0	0.00
90 mm System:		
Gas Meter 1:	1.96	0.06
Gas Meter 2:	3.52	0.10
Sample Rate:	1.56	0.04
Total Flow Rate:	2,216.71	62.78

Particulate Data

Filter Number:	4684.0 (pair)	
Weight Gain:	3.230	mg
Sample Multiplier:	1.417	

Correction Factors

NOx Humidity CF:	0.964
Dry-to-Wet CF, Sample:	0.978
Dry-to-Wet CF, Bckgrd:	0.983
Dilution Factor:	22.26

Test Cycle Data

Sample Time:	1,206.50	sec		
Work:	23.11	hp-hr	17.23	kW-hr
Reference Work:	23.93	hp-hr	17.84	kW-hr
Total Volume (Vmix):	44,574.3	scf	1,262.37	scm

Brake-Specific Emission Results

BSHC (Cell)	0.058	g/hp-hr	0.078	g/kW-hr
CO	2.587	g/hp-hr	3.469	g/kW-hr
NOx (Cell)	4.642	g/hp-hr	6.225	g/kW-hr
Particulate	0.198	g/hp-hr	0.266	g/kW-hr
CO2	534.4	g/hp-hr	716.67	g/kW-hr
BSFC	0.377	lb/hp-hr	0.229	kg/kW-hr

APPENDIX C

COMPARISON OF VOLUMETRIC AND CARBON BALANCE FUEL FLOW MEASUREMENTS

COMPARISON OF VOLUMETIC AND CARBON BALANCE FUEL FLOW MEASUREMENTS

Test Number	Volumetric, lbs	Carbon Balance, lbs
Prep 1	8.71	ND[a]
Prep 2	8.73	ND
R1	8.89	9.24
R2	8.88	9.23
R3	8.87	9.13
R4	8.80	9.07
R5	8.82	9.16
R6	8.78	9.03
Average of Six Tests	8.84	9.14
C7	8.93	9.05
C8	8.93	9.01
C9	8.94	9.03
C10	8.89	8.98
C11	8.91	9.02
C12	8.88	9.04
Average of Six Tests	8.91	9.02
R13	8.73	8.89
R14	8.77	8.71
Average of Two Tests	8.75	8.80

[a]ND – not determined for this test