NTRD Program Disclaimers

1. Disclaimer of Endorsement:

The posting herein of progress reports and final reports provided to TCEQ by its NTRD Grant Agreement recipients does not necessarily constitute or imply an endorsement, recommendation, or favoring by TCEQ or the State of Texas. The views and opinions expressed in said reports do not necessarily state or reflect those of TCEQ or the State of Texas, and shall not be used for advertising or product endorsement purposes.

2. Disclaimer of Liability:

The posting herein of progress reports and final reports provided to TCEQ by its NTRD Grant Agreement recipients does not constitute by TCEQ or the State of Texas the making of any warranty, express or implied, including the warranties of merchantability and fitness for a particular purpose, and such entities do not assume any legal liability or responsibility for the accuracy, completeness, or usefulness of any information,apparatus, product, or process disclosed, or represent that its use would not infringe privately owned rights.

New Technology Research & Development Program
Grant Contract 582-5-70807-M029

Final Deliverable Report

The preparation of this report is based on work funded in part
by the State of Texas through a Grant from the
Texas Commission on Environmental Quality.

TCEQ PROOF OF CONCEPT TESTING OF AN LCD, INC. FUEL ADDITIVE

FINAL REPORT

SwRI Project No. 03-11929

Prepared for:

LCD, Inc.
4402 Sunbelt Dr.
Addison, TX 75001

Prepared by:

E. Robert Fanick
Group Leader

March 2006

The preparation of this report is based on work funded in part by the State of Texas through a Grant from the Texas Commission on Environmental Quality.

TCEQ PROOF OF CONCEPT TESTING OF AN LCD, INC. FUEL ADDITIVE

FINAL REPORT

Prepared for

LCD, Inc.
4402 Sunbelt Dr.
Addison, TX 75001

March 2006

Prepared by:

E. Robert Fanick,
Group Leader

Approved:

Jeff J. White,
Director of Development

Reviewed by:

Lawrence R. Smith, Manager
Chemistry and Unregulated Emissions

DEPARTMENT OF ENGINE AND EMISSIONS RESEARCH
ENGINE, EMISSIONS, AND VEHICLE RESEARCH DIVISION

This report shall not be reproduced, except in full, without the written approval of Southwest Research Institute®.
Results and discussion given in this report relate only to the test items described in this report.

TABLE OF CONTENTS

Page

LIST OF FIGURES.....iii

LIST OF TABLES.....iv

1.0 INTRODUCTION.....1

2.0 EXPERIMENTAL SETUP 2

3.0 DESCRIPTION OF FUELS TESTED.....4

4.0 TEST PLAN AND TEST PROCEDURES 5

5.0 SUMMARY.....11

Appendices **No. of Pages**

A Power Validation and Torque Map Data for a 1991 Detroit Diesel Series 60 Running with References and FP60 Fuel Additive From LCD, Inc.....6

B Transient Regulated Emissions Data for a 1991 Detroit Diesel Series 60 Running with Reference and FP60 Fuel Additive From LCD, Inc. 28

LIST OF FIGURES

Figure **Page**

1 1991 Detroit Diesel Series 60 Mounted in a Transient-Capable Heavy-Duty Test Cell..... 2
2 Sampling System Used for Transient Emission Measurements.....3
3 Graphic Representation of Torque and Speed Commands for the Transient Cycle for Heavy-Duty Engines..... 6
4 Engine Performance Using Fuels R and C.....8

LIST OF TABLES

Table **Page**

1 Engine Specifications and Features....3
2 Fuel Analysis Results for Fuel R....4
3 Test Plan for Proof of Concept Testing with a Heavy-Duty Diesel Engine....5
4 Summary of Transient Torque Maps Obtained with a 1991 Detroit Diesel Series 60 Heavy-Duty Diesel Engine....7
5 Summary of Regulated Emissions....9
6 Summary of the Composite Values for HC, CO, NO_X, PM, and BSFC....10

1.0 INTRODUCTION

The test results reported herein were generated by the Department of Engine and Emissions Research (DEER), Division of Engine, Emissions, and Vehicle Research at Southwest Research Institute® (SwRI®), for LCD, Inc. This study was run as SwRI Project 03.11929. The Principal Investigator and Project Leader for SwRI was Mr. E. Robert Fanick, Group Leader in DEER. SwRI technical personnel involved in engine operation, emissions sampling, and emissions analysis included Messrs. Christopher Elias and Larry Servin. Data reduction was performed by Ms. Sylvia G. Niño, Ms. Amanda L. Korzekwa, and Ms. Kathleen M. Jack. The SwRI Project Manager for this work was Dr. Lawrence R. Smith, Manager of the Chemistry and Unregulated Emissions Section.

This report contains transient emission results obtained from a 1991 Detroit Diesel Corporation (DDC) Series 60 heavy-duty diesel engine using a reference fuel, Fuel R, and a candidate fuel, Fuel C, containing additive FP60 from LCD, Inc. Fuel R was a low sulfur No. 2 diesel fuel, and Fuel C was the same fuel blended with the FP60 additive. These fuels were tested following a proof of concept test protocol which included a cold- and three hot start EPA transient tests with Fuel R, a cold- and three hot start EPA transient tests with Fuel C, and a repeat cold- and three hot start EPA transient tests with Fuel R.

2.0. EXPERIMENTAL SETUP

For testing, a 1991 DDC Series 60 (Serial No. 06RE001123) heavy-duty diesel engine was mounted in a transient-capable test cell, as shown in Figure 1. This engine had an inline, six-cylinder configuration rated for 365 hp at 1800 rpm. It was turbocharged and used a laboratory water-to-air heat exchanger for a charge air intercooler. Table 1 lists the engine specifications and features. The exhaust was routed to a full flow constant volume sampler (CVS) that utilizes a positive displacement pump (PDP), as illustrated in Figure 2. Total flow in the tunnel was maintained at a nominal flow rate of about 2000 SCFM. Sample zone probes for total particulate (PM), heated oxides of nitrogen (NO_x), heated hydrocarbons (HC), carbon monoxide (CO), and carbon dioxide (CO_2) measurements were connected to the main tunnel. Probes for background gas measurement were connected downstream of the dilution air filter pack, but upstream of the mixing section. The dilution system was equipped with pressure and temperature sensors at various locations in order to obtain all necessary information required by the U.S. Code of Federal Regulation (CFR 40, Part 86, Subpart N).

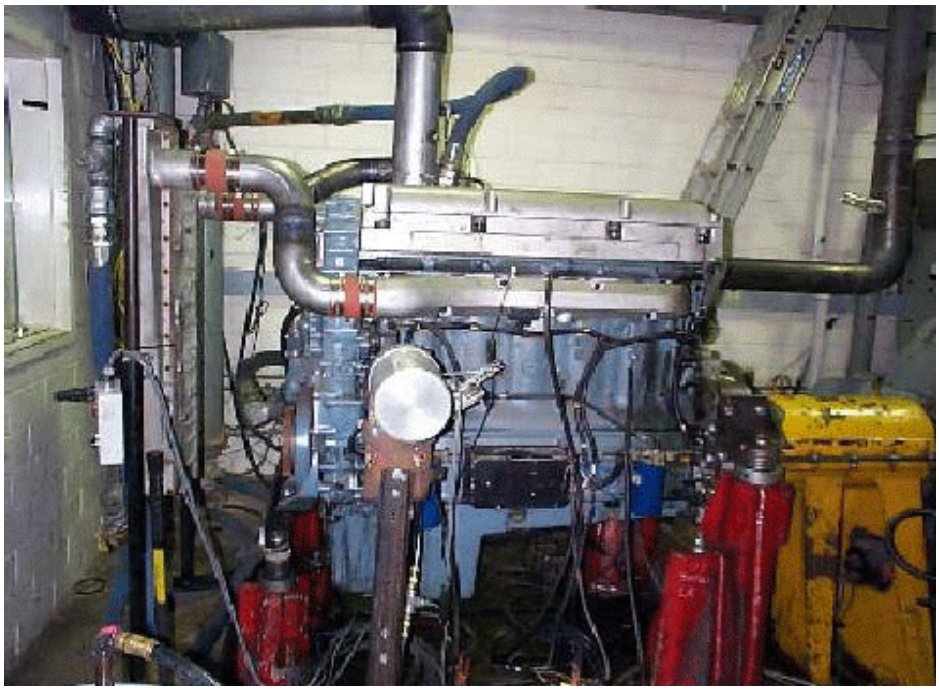

FIGURE 1. 1991 DETROIT DIESEL SERIES 60 MOUNTED IN A TRANSIENT-CAPABLE HEAVY-DUTY TEST CELL

TABLE 1. ENGINE SPECIFICATIONS AND FEATURES

Engine Parameter	Comment
Engine Serial Number	06RE001123
Make	Detroit Diesel
Model	Series 60, 6067GU60
Engine Displacement and Configuration	12.7 L, I-6
Emission Family	MDD12.7FZAK
Rated Power	365 bhp at 1800 rpm
Electronic Control Module	DDEC-II
Aspiration	Turbocharged

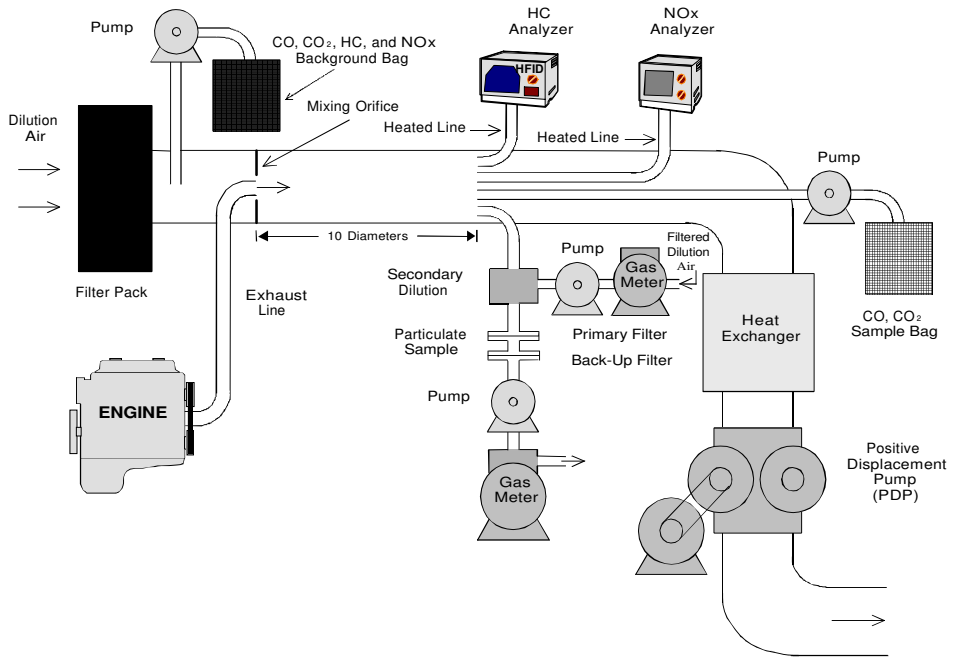

FIGURE 2. SAMPLING SYSTEM USED FOR TRANSIENT EMISSION MEASUREMENTS

3.0. DESCRIPTION OF FUELS TESTED

The reference fuel, Fuel R (SwRI Code EM-5652-F), was a No. 2 low sulfur certification diesel fuel from Chevron Phillips Chemical Company. This fuel was blended with FP60 from LCD, Inc. to prepare Fuel C (SwRI code EM-5870-F). No analysis was performed on the treated fuel. Table 2 lists fuel analysis results for the base fuel.

TABLE 2. FUEL ANALYSIS RESULTS FOR FUEL R

Fuel Code	Test Method	Results for EM-5652-F
Sulfur, ppm	D5453	372.7
Aromatics, vol %	D5186	30.3
Cetane Index	D976	47.62
Cetane Number	D613	47.17
API Gravity	D1250	35.62
Viscosity @ 40°C, cSt	D445	2.55
Flash Point, °F	D93	158.3
Cloud Point, °C	D2500	4
Copper Strip Corrosion	D130	1A
IBP, °F	D86	360.5
10%, °F		432.3
50%, °F		506.8
90%, °F		598.3
EP, °F		652.3

4.0. TEST PLAN AND TEST PROCEDURES

Table 3 presents a test plan for proof of concept heavy-duty engine testing. This test plan begins with a cold- and three hot-start EPA transient test sequence with the base fuel (Fuel R) to establish baseline emissions for the engine. The base fuel was blended with FP60 additive (Fuel C), and a cold- and three hot-start EPA transient test sequence was conducted with this additized fuel. The fuel was then changed back to the base fuel, and an additional cold- and three hot-start test sequence was conducted to determine if the engine emissions and fuel consumption rates returned to their original baseline levels.

TABLE 3. TEST PLAN FOR PROOF OF CONCEPT TESTING WITH A HEAVY-DUTY DIESEL ENGINE

Step	Description
1	Install engine and change oil. Perform fuel change to low sulfur, No. 2 diesel fuel. Operate engine for 5 hours to “break-in” the engine oil. Perform emission instrument calibrations as required. Calibrate torquemeter, and check signal conditioning systems. Validate CVS gaseous and particulate sampling systems using propane recovery techniques.
2	Operate engine at rated speed and full load for approximately 10 minutes, then power validate engine.
3	Conduct transient "full-throttle" torque map from low- to high-idle, and save resulting transient command cycle.
4	Run two 20-minute practice EPA transient cycles without engine-off soak between cycles, and adjust dynamometer controls to meet statistical limits for transient cycle operation.
5	Soak engine overnight. Run a cold-start transient cycle; soak engine for 20 minutes; run three hot-start transient cycles with a 20 minute soak between each cycle; and measure THC, CO, NO_x, and total particulate emissions during each test.
6	Blend fuel according to written instructions. Perform fuel change to the base fuel blended with FP60.
7	Repeat Steps 2 through 5.
8	Perform fuel change to base fuel. Repeat Steps 2 through 5.
9	Summarize data and prepare the final report.

The EPA transient cycle is described by means of percent of maximum torque and percent of rated speed for each one-second interval over a test cycle of 1199 seconds duration. To generate a transient cycle, an engine's full power curve is obtained from an engine speed below curb idle speed to maximum no-load engine speed. Data from this "power curve," or engine map, are used with the specified speed and load percentages to form a transient cycle. A

graphic presentation of the speed and torque commands which constitute a transient cycle is given in Figure 3 for illustration purposes.

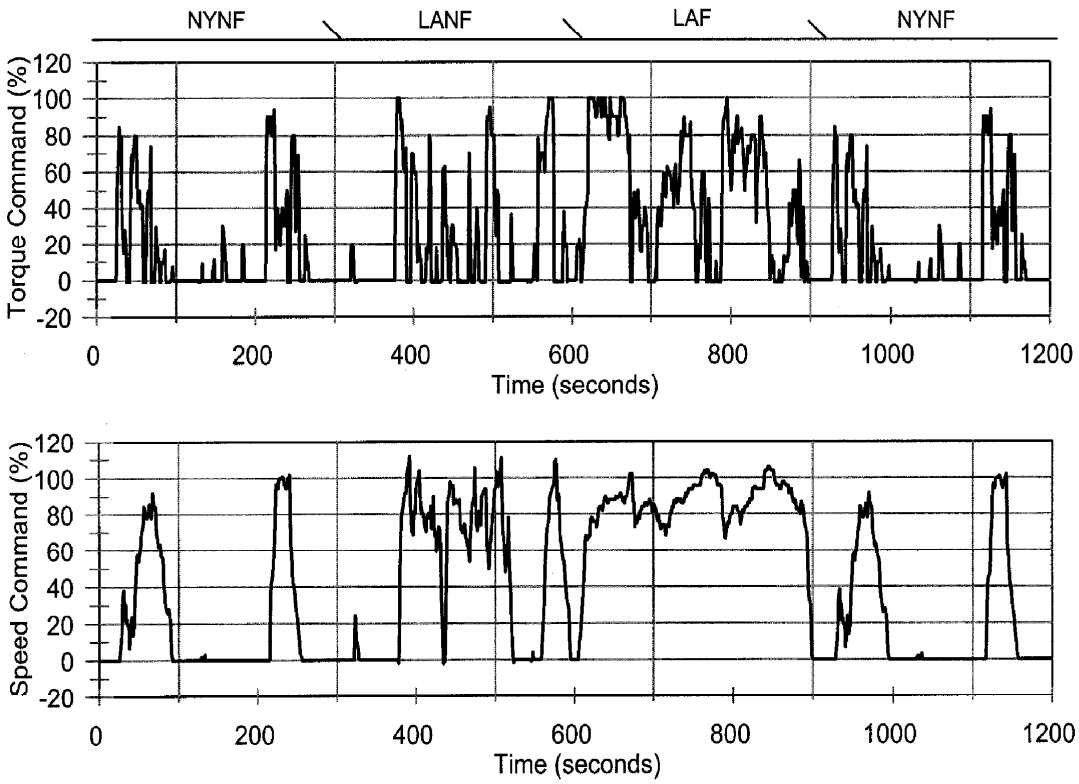

FIGURE 3. GRAPHIC REPRESENTATION OF TORQUE AND SPEED COMMANDS FOR THE TRANSIENT CYCLE FOR HEAVY-DUTY ENGINES

In general, a transient test consists of a cold-start transient cycle and a hot-start transient cycle. The same engine command cycle is used in both cases. For the cold-start, the diesel engine is operated over a "prep" cycle, and then allowed to stand overnight in an ambient soak at a temperature between 68 and 86°F. The cold-start transient cycle begins when the engine is cranked for cold start-up. Upon completion of the cold-start transient cycle, the engine is stopped and allowed to stand for 20 minutes. After this hot-soak period, a hot-start cycle begins with engine cranking. In order to determine how well the engine followed the transient command cycle, engine performance is compared to engine command, and several statistics are computed. These computed statistics must be within tolerances specified in the CFR. In addition to the statistical parameters, the cycle work actually produced should be between 5 percent above and 15 percent below the work requested by the command cycle. The first five minutes of the cycle is designated as the New York Non-Freeway (NYNF) portion of the test and represents city operation with extensive idle time. The second five minutes is called the Los Angeles Non-Freeway (LANF) portion. This part of the test also represents city operation, but

without the excessive idle time. The third five minute section of the test is called the Los Angeles Freeway (LAF) portion. This part is more representative of higher speed conditions indicative of freeway operation. The final five minutes of the EPA transient cycle is a repeat of the NYNF portion. These four parts are combined to give the EPA transient cycle.

Results for the baseline transient torque map that was generated with Fuel R and used as the reference map for all subsequent transient runs are given in Table 4. Table 4 also shows the torque maps for Fuel C and the repeat map for Fuel R. The results indicate that engine performance characteristics were consistent throughout the testing. Figure 4 shows a graphical representation of the torque map data for both fuels. More detailed data on engine performance is given in Appendix A.

TABLE 4. SUMMARY OF TRANSIENT TORQUE MAPS OBTAINED WITH A 1991 DETROIT DIESEL SERIES 60 HEAVY-DUTY DIESEL ENGINE

Engine Speed, rpm	600	700	800	900	1000	1100	1200	1300	1400	1500	1600	1700	1800
Fuel R													
First Map, lb-ft [a]	625	678	792	936	1066	1208	1407	1370	1314	1250	1191	1105	1041
Repeat Map, lb-ft	616	668	783	937	1074	1206	1400	1380	1326	1260	1189	1116	1048
Fuel C													
Torque, lb-ft	628	681	797	937	1072	1210	1411	1380	1325	1262	1193	1120	1054

Idle speed: 600 rpm, rated speed: 1800 rpm.
[a] This map was used as reference for all subsequent transient cycles.

During steady-state performance checks, the 1991 DDC Series 60 engine had a maximum power of 356 hp at a rated speed of 1800 rpm on Fuel R for the initial baseline, a maximum power of 360 hp on Fuel C, and a maximum power of 360 hp for the final baseline. Peak torque at 1200 rpm was 1410 lb-ft on Fuel R for the initial baseline, 1414 lb-ft on Fuel C, and 1401 lb-ft for the final baseline. No operational problems were observed.

Table 5 gives emission results for HC, CO, NO_x, and PM obtained for each of the tests. Detailed results are given in Appendix B. The first repeat cold-start test with Fuel R after testing with Fuel C failed engine statistics and therefore was not valid. The test was repeated, and the resulting data were included in Table 5. The invalid test data have been included in Appendix B for reference only. The average, standard deviation, and coefficient of variation for the composite emissions (weighted 1/7 cold-start and 6/7 hot-start) are also included in Table 5 for each set of three hot-start tests with each fuel. Table 6 summarizes the results given in Table 5. When the data sets were compared for each of the regulated emissions, the averages for a selected emission were either equivalent or there was overlap of the standard deviations and, as a result, no difference in emission for the two fuels or for the two sets of tests with Fuel R could be discerned.

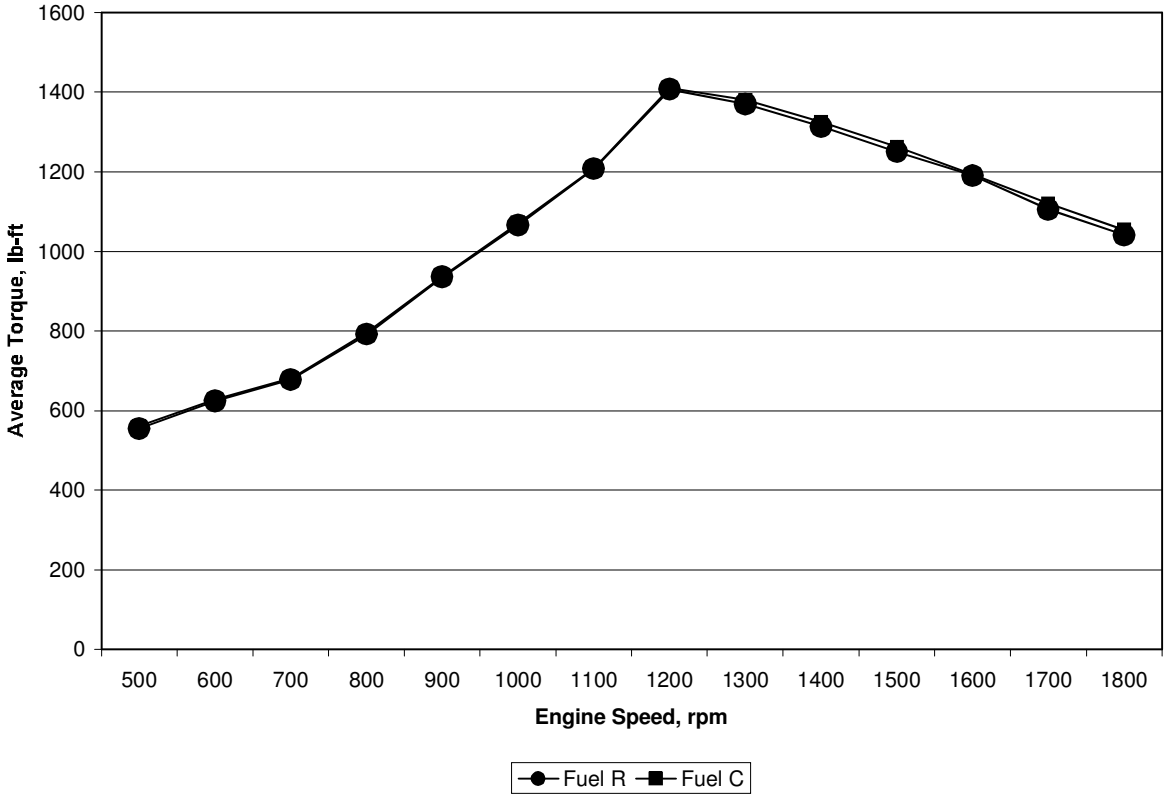

FIGURE 4. ENGINE PERFORMANCE USING FUELS R AND C

TABLE 5. SUMMARY OF REGULATED EMISSIONS

Test	Emissions Results, g/bhp-hr				
	THC	CO	NO_X	Particulate	BSFC, lb/hp-hr
BASE C1	0.09	2.8	5.5	0.19	0.399
BASE H1	0.05	2.2	4.9	0.18	0.382
Composite C1-H1	0.06	2.3	5.0	0.18	0.384
BASE H2	0.06	2.2	4.8	0.18	0.379
Composite C1-H2	0.06	2.3	4.9	0.18	0.382
BASE H3	0.08	2.3	4.8	0.18	0.385
Composite C1-H3	0.08	2.4	4.9	0.18	0.387
Average of Composites	0.07	2.3	4.9	0.18	0.384
Standard Deviation	0.01	0.1	0.04	0.00	0.003
Coefficient of Variation, %	16.6	3.1	0.8	0.8	0.7
BLEND C1	0.10	2.8	5.7	0.18	0.395
BLEND H1	0.08	2.2	4.8	0.18	0.377
Composite C1-H1	0.08	2.3	4.9	0.18	0.379
BLEND H2	0.08	2.2	4.8	0.18	0.377
Composite C1-H2	0.08	2.3	4.9	0.18	0.379
BLEND H3	0.07	2.2	4.7	0.18	0.373
Composite C1-H3	0.07	2.3	4.9	0.18	0.376
Average of Composites	0.08	2.3	4.9	0.18	0.378
Standard Deviation	0.01	0.02	0.0	0.00	0.002
Coefficient of Variation, %	10.4	1.0	0.8	2.1	0.5
BASE C3	0.08	3.2	5.8	0.19	0.406
BASE H7	0.08	2.2	4.9	0.18	0.380
Composite C3-H7	0.08	2.3	5.1	0.18	0.384
BASE H8	0.08	2.2	4.9	0.18	0.380
Composite C3-H8	0.08	2.4	5.0	0.18	0.384
BASE H9	0.08	2.3	4.8	0.18	0.387
Composite C3-H9	0.08	2.5	4.9	0.18	0.390
Average of Composites	0.08	2.4	5.0	0.18	0.386
Standard Deviation	0.00	0.1	0.1	0.00	0.003
Coefficient of Variation, %	2.9	2.1	1.2	0.6	0.9

[a]Test did not pass engine statistics for a valid test. Data are included for reference only.

TABLE 6. SUMMARY OF THE COMPOSITE VALUES FOR HC, CO, NO_x, PM, AND BSFC

Fuel Type		NO_x, g/hp-hr	PM, g/hp-hr	HC, g/hp-hr	CO, g/hp-hr	BSFC, lb/hp-hr
R	Average	4.9	0.18	0.07	2.3	0.384
	Std. Dev	0.0	0.00	0.01	0.1	0.003
	% COV	0.8	0.8	16.6	3.1	0.7
C	Average	4.9	0.18	0.08	2.3	0.378
	Std. Dev	0.0	0.00	0.01	0.0	0.002
	% COV	0.8	2.1	10.4	1.0	0.5
R	Average	5.0	0.18	0.08	2.4	0.386
	Std. Dev	0.1	0.00	0.00	0.1	0.003
	% COV	1.2	0.6	2.9	2.1	0.9

5.0. SUMMARY

This test program was conducted for LCD, Inc. by the DEER at SwRI. Composite emission results from one cold- and three hot-start transient tests run on a 1991, DDC Series 60 heavy-duty diesel were compared for a reference fuel (Fuel R) and for the same fuel blended with the FP60 additive (Fuel C). Averages and standard deviations were calculated for the two sets of tests with the reference fuel and for the set with the additized fuel. Standard deviations for the three data sets overlapped and no differences in emissions for the two fuels or for the two data sets with Fuel R could be discerned.

APPENDIX A

POWER VALIDATION AND TORQUE MAP DATA FOR A 1991 DETROIT DIESEL SERIES 60 RUNNING WITH REFERENCE AND FP60 FUEL ADDITIVE FROM LCD, INC.

3-11929-001
Project Number

PV-745
Test or ID Number

POWER VALIDATION
HEAVY-DUTY DIESEL ENGINE

Cell No.: 8	Date: 02/08/2006	Start Time:	Finish Time:
Engine S/N or ID: 1123		[X] As-Received	[ ] Modified
Operator: CE	Project Leader: Robert Fanick		Fuel Code: EM-5652-F
Low Idle rpm (no load): 0	Low Idle rpm @ 600	lb-ft CITT: 0	High Idle rpm (governed): 0
Notes:			

Parameters	Rated Power	Peak Torque
Torque (lb-ft)	1,042	1,410
Speed (rpm)	1,800	1,200
Power (bhp)	356.0	320.0
Fuel Flow (lb/hr)	110.9	102.4
Water Out (°F)	191.0	195
Water In (°F)	172	172
Oil (°F)	223	225
Inlet Air (°F)	68.0	70
Fuel (°F)	99	98
Exhaust (°F)	835	1,024
Intercooler In (°F)	260	258
Intercooler Out (°F)	122	108
IC Coolant Supply (°F)		
Inlet Air Dewpoint (°F)	54.3	54.0
Chiller Water (°F)	56.0	56.0
Barometer ("Hg)	29.30	29.30
Inlet Air Restriction ("H2O)	-16.1	-7.90
Exhaust Restriction ("Hg)	2.3	1.33
Boost Pres. Before IC ("Hg)	36.62	34.79
Boost Pres. After IC ("Hg)	33.9	33.3
Intercooler ÐP ("H2O)	37.3	19.7
Oil Pressure (psig)	48.0	41.0
Fuel Pressure (psig)	19.6	19.9
Engine Water Pres. (psig)		
Hour Meter (hours)	5,708.9	5,709.0

3-11929-001
Project Number

M-745
Test Number

POWER MAP
HEAVY-DUTY DIESEL ENGINE

Date: 02/08/2006 Time: 2.24	Engine Model: DDC Series 60		
Cell No.: 8	Serial No. or ID: 1123		
Operator: CE	Hour Meter: 5,709.1	Dura. Hours:	0.00
Project Leader: Robert Fanick	Fuel Code: EM-5652-F	Baro., "Hg:	29.29

MAP PRECONDITIONING

Parameter	Rated Speed	RatedTorque
Power (bhp)	356.00	320.00
Torque (lb-ft)	1,042.00	1,410.00
Speed (rpm)	1,800.00	1,200.00
Fuel Flow (lb/hr)	110.90	102.40
Inlet Air Restriction ("H2O)	-16.10	-7.90
Exhaust Restriction ("Hg)	2.30	1.33
Intake Air (°F)	68.00	70.00
Intake Air Dewpoint (°F)	54.30	54.00
ÐP Across Intercooler ("H2O)	37.26	19.72
Temperature After Intercooler (°F)	122.00	108.00

Map @ [X] 8 rpm/sec sweep [ ] Other: Idle Speed, rpm Low: 0 High: 0

RESULTS

Speed, rpm	Torque lb-ft	Speed, rpm	Torque lb-ft	Speed, rpm	Torque lb-ft	Speed, rpm	Torque lb-ft
100		1100	1,208	2100		3100	
200		1200	1,407	2200		3200	
300		1300	1,370	2300		3300	
400		1400	1,314	2400		3400	
500	555	1500	1,250	2500		3500	
600	625	1600	1,191	2600		3600	
700	678	1700	1,105	2700		3700	
800	792	1800	1,041	2800		3800	
900	936	1900		2900		3900	
1000	1,066	2000		3000		4000	

Speed Ramp Rate 8.0 rpm/sec RATED SPEED, rpm: Manufacturer 1,800 Measured 1,651

Calculated Maximum Speed = 1.13*[Highest RATED SPEED - Curb Idle Speed] + Curb Idle Speed = 0 rpm

TRANSIENT CYCLE INPUTS

CITT: 0 lb-ft

Idle Speed: 600 rpm Rated Speed 1,800 rpm Max. Power 363.0 hp Max. Torque 1,412 lb-ft

3-11929-001
Project Number

PV-753
Test or ID Number

POWER VALIDATION
HEAVY-DUTY DIESEL ENGINE

Cell No.: 8	Date: 02/09/2006	Start Time:	Finish Time:
Engine S/N or ID: 1123		[X] As-Received	[ ] Modified
Operator: CE	Project Leader: Robert Fanick		Fuel Code: EM-5652-F
Low Idle rpm (no load): 0	Low Idle rpm @ 600	lb-ft CITT: 0	High Idle rpm (governed): 0
Notes:			

Parameters	Rated Power	Peak Torque
Torque (lb-ft)	1,049	1,414
Speed (rpm)	1,802	1,200
Power (bhp)	360.0	323.0
Fuel Flow (lb/hr)	112.9	103.7
Water Out (°F)	191.0	195
Water In (°F)	174	172
Oil (°F)	224	223
Inlet Air (°F)	69.0	71
Fuel (°F)	99	98
Exhaust (°F)	831	1,026
Intercooler In (°F)	260	259
Intercooler Out (°F)	123	109
IC Coolant Supply (°F)		
Inlet Air Dewpoint (°F)	56.1	55.9
Chiller Water (°F)	56.0	56.0
Barometer ("Hg)	29.30	29.30
Inlet Air Restriction ("H2O)	-16.2	-7.96
Exhaust Restriction ("Hg)	2.3	1.33
Boost Pres. Before IC ("Hg)	36.67	34.91
Boost Pres. After IC ("Hg)	33.9	33.4
Intercooler ÐP ("H2O)	37.7	21.9
Oil Pressure (psig)	48.0	42.0
Fuel Pressure (psig)	18.5	18.4
Engine Water Pres. (psig)		
Hour Meter (hours)	5,711.4	5,711.5

3-11929-001
Project Number

M-753
Test Number

POWER MAP
HEAVY-DUTY DIESEL ENGINE

Date: 02/09/2006 Time: 12:42	Engine Model: DDC		
Cell No.: 8	Serial No. or ID: 1123		
Operator: CE	Hour Meter: 5,711.6	Dura. Hours:	0.00
Project Leader: Robert Fanick	Fuel Code: EM-5870-F	Baro., "Hg:	29.30

MAP PRECONDITIONING

Parameter	Rated Speed	RatedTorque
Power (bhp)	360.00	323.00
Torque (lb-ft)	1,049.00	1,414.00
Speed (rpm)	1,802.00	1,200.00
Fuel Flow (lb/hr)	112.90	103.70
Inlet Air Restriction ("H2O)	-16.20	-7.96
Exhaust Restriction ("Hg)	2.30	1.33
Intake Air (°F)	69.00	71.00
Intake Air Dewpoint (°F)	56.10	55.90
ÐP Across Intercooler ("H2O)	37.67	21.88
Temperature After Intercooler (°F)	123.00	109.00

Map @ [X] 8 rpm/sec sweep [ ] Other: Idle Speed, rpm Low: 0 High: 0

RESULTS

Speed, rpm	Torque lb-ft	Speed, rpm	Torque lb-ft	Speed, rpm	Torque lb-ft	Speed, rpm	Torque lb-ft
100		1100	1,210	2100		3100	
200		1200	1,411	2200		3200	
300		1300	1,380	2300		3300	
400		1400	1,325	2400		3400	
500	562	1500	1,262	2500		3500	
600	628	1600	1,193	2600		3600	
700	681	1700	1,120	2700		3700	
800	797	1800	1,054	2800		3800	
900	937	1900		2900		3900	
1000	1,072	2000		3000		4000	

Speed Ramp Rate 8.0 rpm/sec RATED SPEED, rpm: Manufacturer 1,800 Measured 1,657

Calculated Maximum Speed = 1.13*[Highest RATED SPEED - Curb Idle Speed] + Curb Idle Speed = 0 rpm

TRANSIENT CYCLE INPUTS

CITT: 0 lb-ft

Idle Speed: 600 rpm Rated Speed 1,800 rpm Max. Power 367.0 hp Max. Torque 1,421 lb-ft

3-11929-001
Project Number

PV-762
Test or ID Number

POWER VALIDATION
HEAVY-DUTY DIESEL ENGINE

Cell No.: 8	Date: 02/10/2006	Start Time:	Finish Time:
Engine S/N or ID: 1123		[X] As-Received	[ ] Modified
Operator: CE	Project Leader: Robert Fanick		Fuel Code: EM-5652-F
Low Idle rpm (no load): 0	Low Idle rpm @ 600	lb-ft CITT: 0	High Idle rpm (governed): 0
Notes:			

Parameters	Rated Power	Peak Torque
Torque (lb-ft)	1,044	1,401
Speed (rpm)	1,801	1,199
Power (bhp)	360.0	319.0
Fuel Flow (lb/hr)	114.3	102.7
Water Out (°F)	191.0	195
Water In (°F)	172	172
Oil (°F)	223	225
Inlet Air (°F)	69.0	71
Fuel (°F)	100	99
Exhaust (°F)	834	1,029
Intercooler In (°F)	265	260
Intercooler Out (°F)	124	109
IC Coolant Supply (°F)		
Inlet Air Dewpoint (°F)	59.7	58.8
Chiller Water (°F)	57.0	57.0
Barometer ("Hg)	29.04	29.04
Inlet Air Restriction ("H2O)	-16.3	-7.82
Exhaust Restriction ("Hg)	2.3	1.28
Boost Pres. Before IC ("Hg)	36.97	34.34
Boost Pres. After IC ("Hg)	34.2	32.9
Intercooler ÐP ("H2O)	37.7	19.4
Oil Pressure (psig)	47.0	41.0
Fuel Pressure (psig)	20.0	21.2
Engine Water Pres. (psig)		
Hour Meter (hours)	5,714.2	5,714.3

SwRI - Department of Emissions Research
FORM 07-001A

02/26/2006

3-11929-001
Project Number

M-762
Test Number

POWER MAP
HEAVY-DUTY DIESEL ENGINE

Date: 02/10/2006 Time: 1:06	Engine Model: DDC		
Cell No.: 8	Serial No. or ID: 1123		
Operator: CE	Hour Meter: 5,714.4	Dura. Hours:	0.00
Project Leader: Robert Fanick	Fuel Code:	Baro., "Hg:	29.04

MAP PRECONDITIONING

Parameter	Rated Speed	RatedTorque
Power (bhp)	360.00	319.00
Torque (lb-ft)	1,044.00	1,401.00
Speed (rpm)	1,801.00	1,199.00
Fuel Flow (lb/hr)	114.30	102.70
Inlet Air Restriction ("H2O)	-16.30	-7.82
Exhaust Restriction ("Hg)	2.30	1.28
Intake Air (°F)	69.00	71.00
Intake Air Dewpoint (°F)	59.70	58.80
ÐP Across Intercooler ("H2O)	37.67	19.44
Temperature After Intercooler (°F)	124.00	109.00

Map @ [X] 8 rpm/sec sweep [ ] Other: Idle Speed, rpm Low: 0 High: 0

RESULTS

Speed, rpm	Torque lb-ft	Speed, rpm	Torque lb-ft	Speed, rpm	Torque lb-ft	Speed, rpm	Torque lb-ft
100		1100	1,206	2100		3100	
200		1200	1,400	2200		3200	
300		1300	1,380	2300		3300	
400		1400	1,326	2400		3400	
500	551	1500	1,260	2500		3500	
600	616	1600	1,189	2600		3600	
700	668	1700	1,116	2700		3700	
800	783	1800	1,048	2800		3800	
900	937	1900		2900		3900	
1000	1,074	2000		3000		4000	

Speed Ramp Rate 8.0 rpm/sec RATED SPEED, rpm: Manufacturer 1,800 Measured 1,637

Calculated Maximum Speed = 1.13*[Highest RATED SPEED - Curb Idle Speed] + Curb Idle Speed = 0 rpm

TRANSIENT CYCLE INPUTS

CITT: 0 lb-ft

Idle Speed: 600 rpm Rated Speed 1,800 rpm Max. Power 365.0 hp Max. Torque 1,418 lb-ft

APPENDIX B

TRANSIENT REGULATED EMISSIONS DATA FOR A 1991 DETROIT DIESEL SERIES 60 RUNNING WITH REFERENCE AND FP60 FUEL ADDITIVE FROM LCD, INC.

Southwest Research Institute - Department of Emissions Research
EPA Cold Transient Emission Test Results
Project No. 3-11929-001

Engine Model:	1991 Detroit Diesel S60	Test No.:	BASE C1	DIESEL 2D, EM-5652-F	
Engine Desc.:	12.7 L (775 CID) 6	Date: 02/09/2006	Time: 09:28	HCR: 1.812	FID Resp: 1.00
Engine Cycle:	Diesel	Program HDT:	4.12-R	H= 0.132 C= 0.868 O= 0.000 X= 0.000	
Engine S/N:	06RE001123	Cell: 8	Bag Cart: 1		

Ambient/Test Cell Conditions

Barometer:	29.36	in Hg	99.4 kPa
Engine Inlet Air			
Temperature:	71.0	°F	21.7 °C
Dew Point:	54.4	°F	12.4 °C
Abs. Humidity:	64.4	gr/lb	9.2 g/kg
Rel. Humidity:	56	%	
Dilution Air:			
Temperature:	75.0	°F	23.9 °C
Abs. Humidity	58.5	gr/lb	8.4 g/kg
Rel. Humidity:	44	%	

Measured Gaseous Data

	Meter	Range	Concentration		
HC Sample	n/a		7.04	ppm	
HC Bckgrd	n/a		4.20	ppm	
CO Sample	51.5	2	50.31	ppm	(Dry)
CO Bckgrd	0.6	2	0.56	ppm	
NOx Sample	n/a		60.52	ppm	(Dry)
NOx Bckgrd	1.5	1	0.38	ppm	
CO2 Sample	76.8	1	0.6679	%	(Wet)
CO2 Bckgrd	9.6	1	0.0529	%	

Corrected Concentrations

HC	3.05	ppm
CO	48.43	ppm
NOx	58.99	ppm
CO2	0.6176	%

Mass Emissions

HC		2.193	grams	
CO		70.508	grams	
NOx		137.309	grams	
Particulate		4.585	grams	
CO2		14.131	kg	
Fuel	9.88 lb		4.48	kg

Sample Flows

	scfm	scmm
Blower 1 Rate:	2,180.7	61.76
Blower 2 Rate:	0.0	0.00
90 mm System:		
Gas Meter 1:	2.32	0.07
Gas Meter 2:	4.06	0.11
Sample Rate:	1.73	0.05
Total Flow Rate:	2,182.46	61.81

Particulate Data

Filter Number:	4072.0 (pair)	
Weight Gain:	3.642	mg
Sample Multiplier:	1.259	

Correction Factors

NOx Humidity CF:	0.973
Dry-to-Wet CF, Sample:	0.981
Dry-to-Wet CF, Bckgrd:	0.987
Dilution Factor:	20.15

Test Cycle Data

Sample Time:	1,214.10	sec		
Work:	24.79	hp-hr	18.49	kW-hr
Reference Work:	24.38	hp-hr	18.18	kW-hr
Total Volume (Vmix):	44,162.0	scf	1,250.69	scm

Brake-Specific Emission Results

BSHC (Cell)	0.088	g/hp-hr	0.119	g/kW-hr
CO	2.844	g/hp-hr	3.814	g/kW-hr
NOx (Cell)	5.539	g/hp-hr	7.428	g/kW-hr
Particulate	0.185	g/hp-hr	0.248	g/kW-hr
CO2	570.0	g/hp-hr	764.45	g/kW-hr
BSFC	0.399	lb/hp-hr	0.242	kg/kW-hr

Southwest Research Institute - Department of Emissions Research
EPA Hot Transient Emission Test Results
Project No. 3-11929-001

Engine Model:	1991 Detroit Diesel S60	Test No.: BASE H1		DIESEL 2D, EM-5652-F
Engine Desc.:	12.7 L (775 CID) 6	Date: 02/09/2006	Time: 10:08	HCR: 1.812 FID Resp: 1.00
Engine Cycle:	Diesel	Program HDT: 4.12-R		H= 0.132 C= 0.868 O= 0.000 X= 0.000
Engine S/N:	06RE001123	Cell: 8	Bag Cart: 1	

Ambient/Test Cell Conditions

Barometer:	29.36	in Hg	99.4 kPa
Engine Inlet Air			
Temperature:	72.0	°F	22.2 °C
Dew Point:	56.4	°F	13.6 °C
Abs. Humidity:	69.3	gr/lb	9.9 g/kg
Rel. Humidity:	58	%	
Dilution Air:			
Temperature:	71.0	°F	21.7 °C
Abs. Humidity	65.2	gr/lb	9.3 g/kg
Rel. Humidity:	56	%	

Measured Gaseous Data

	Meter	Range	Concentration		
HC Sample	n/a		6.08	ppm	
HC Bckgrd	n/a		4.60	ppm	
CO Sample	38.9	2	37.80	ppm	(Dry)
CO Bckgrd	0.4	2	0.37	ppm	
NOx Sample	n/a		51.97	ppm	(Dry)
NOx Bckgrd	1.8	1	0.45	ppm	
CO2 Sample	74.2	1	0.6322	%	(Wet)
CO2 Bckgrd	9.6	1	0.0529	%	

Corrected Concentrations

HC	1.70	ppm
CO	36.31	ppm
NOx	50.48	ppm
CO2	0.5818	%

Mass Emissions

HC		1.219	grams	
CO		52.826	grams	
NOx		118.882	grams	
Particulate		4.347	grams	
CO2		13.301	kg	
Fuel	9.28 lb		4.21	kg

Sample Flows

	scfm	scmm
Blower 1 Rate:	2,178.8	61.70
Blower 2 Rate:	0.0	0.00
90 mm System:		
Gas Meter 1:	2.27	0.06
Gas Meter 2:	4.02	0.11
Sample Rate:	1.75	0.05
Total Flow Rate:	2,180.53	61.75

Particulate Data

Filter Number:	4153.0 (pair)	
Weight Gain:	3.487	mg
Sample Multiplier:	1.247	

Correction Factors

NOx Humidity CF:	0.985
Dry-to-Wet CF, Sample:	0.980
Dry-to-Wet CF, Bckgrd:	0.985
Dilution Factor:	21.32

Test Cycle Data

Sample Time:	1,214.20	sec		
Work:	24.32	hp-hr	18.14	kW-hr
Reference Work:	24.38	hp-hr	18.18	kW-hr
Total Volume (Vmix):	44,126.7	scf	1,249.69	scm

Brake-Specific Emission Results

BSHC (Cell)	0.050	g/hp-hr	0.067	g/kW-hr
CO	2.172	g/hp-hr	2.913	g/kW-hr
NOx (Cell)	4.888	g/hp-hr	6.555	g/kW-hr
Particulate	0.179	g/hp-hr	0.240	g/kW-hr
CO2	546.9	g/hp-hr	733.41	g/kW-hr
BSFC	0.382	lb/hp-hr	0.232	kg/kW-hr

Southwest Research Institute - Department of Emissions Research
Composite Transient Emission Test Results
Project No. 3-11929-001

Engine Model:	1991 Detroit Diesel S60	Date: 02/09/2006 Time: 09:28	DIESEL 2D, EM-5652-F	
Engine Desc.:	12.7 L (775 CID) 6	Program HDT: 4.12-R	HCR: 1.812	FID Resp: 1.00
Engine Cycle:	Diesel	Cell: 8 Bag Cart: 1	H= 0.132 C= 0.868 O= 0.000 X= 0.000	
Engine S/N:	06RE001123			

Test Numbers
Cold: BASE C1 Hot: BASE H1

Brake-Specific Emission Results

BSHC (Cell)	0.056	g/hp-hr	0.075	g/kW-hr
CO	2.270	g/hp-hr	3.044	g/kW-hr
NOx (Cell)	4.983	g/hp-hr	6.682	g/kW-hr
Particulate	0.180	g/hp-hr	0.241	g/kW-hr
CO2	550.3	g/hp-hr	737.92	g/kW-hr
BSFC	0.384	lb/hp-hr	0.234	kg/kW-hr
Work:	24.39	hp-hr	18.19	kW-hr
Reference Work:	24.38	hp-hr	18.18	kW-hr

Analyzed: 02/09/2006 13:28

Southwest Research Institute - Department of Emissions Research
EPA Hot Transient Emission Test Results
Project No. 3-11929-001

Engine Model:	1991 Detroit Diesel S60	Test No.:	BASE H2	DIESEL 2D, EM-5652-F	
Engine Desc.:	12.7 L (775 CID) 6	Date: 02/09/2006	Time: 10:48	HCR: 1.812	FID Resp: 1.00
Engine Cycle:	Diesel	Program HDT:	4.12-R	H= 0.132 C= 0.868 O= 0.000 X= 0.000	
Engine S/N:	06RE001123	Cell: 8	Bag Cart: 1		

Ambient/Test Cell Conditions

Barometer:	29.36	in Hg	99.4 kPa
Engine Inlet Air			
Temperature:	73.0	°F	22.8 °C
Dew Point:	57.0	°F	13.9 °C
Abs. Humidity:	70.9	gr/lb	10.1 g/kg
Rel. Humidity:	57	%	
Dilution Air:			
Temperature:	76.0	°F	24.4 °C
Abs. Humidity	86.3	gr/lb	12.3 g/kg
Rel. Humidity:	63	%	

Measured Gaseous Data

	Meter	Range	Concentration		
HC Sample	n/a		7.67	ppm	
HC Bckgrd	n/a		6.00	ppm	
CO Sample	39.6	2	38.49	ppm	(Dry)
CO Bckgrd	0.1	2	0.09	ppm	
NOx Sample	n/a		50.48	ppm	(Dry)
NOx Bckgrd	0.4	1	0.10	ppm	
CO2 Sample	73.5	1	0.6228	%	(Wet)
CO2 Bckgrd	9.1	1	0.0500	%	

Corrected Concentrations

HC	1.95	ppm
CO	37.17	ppm
NOx	49.12	ppm
CO2	0.5751	%

Mass Emissions

HC		1.406	grams	
CO		54.338	grams	
NOx		116.711	grams	
Particulate		4.455	grams	
CO2		13.212	kg	
Fuel	9.22 lb		4.18	kg

Sample Flows

	scfm	scmm
Blower 1 Rate:	2,189.2	62.00
Blower 2 Rate:	0.0	0.00
90 mm System:		
Gas Meter 1:	2.26	0.06
Gas Meter 2:	4.02	0.11
Sample Rate:	1.76	0.05
Total Flow Rate:	2,190.97	62.05

Particulate Data

Filter Number:	4154.0 (pair)	
Weight Gain:	3.571	mg
Sample Multiplier:	1.248	

Correction Factors

NOx Humidity CF:	0.989
Dry-to-Wet CF, Sample:	0.975
Dry-to-Wet CF, Bckgrd:	0.981
Dilution Factor:	21.63

Test Cycle Data

Sample Time:	1,214.30	sec		
Work:	24.33	hp-hr	18.14	kW-hr
Reference Work:	24.38	hp-hr	18.18	kW-hr
Total Volume (Vmix):	44,341.5	scf	1,255.78	scm

Brake-Specific Emission Results

BSHC (Cell)	0.058	g/hp-hr	0.078	g/kW-hr
CO	2.233	g/hp-hr	2.995	g/kW-hr
NOx (Cell)	4.797	g/hp-hr	6.433	g/kW-hr
Particulate	0.183	g/hp-hr	0.246	g/kW-hr
CO2	543.0	g/hp-hr	728.23	g/kW-hr
BSFC	0.379	lb/hp-hr	0.231	kg/kW-hr

Southwest Research Institute - Department of Emissions Research
Composite Transient Emission Test Results
Project No. 3-11929-001

Engine Model:	1991 Detroit Diesel S60	Date: 02/09/2006 Time: 09:28	DIESEL 2D, EM-5652-F	
Engine Desc.:	12.7 L (775 CID) 6	Program HDT: 4.12-R	HCR: 1.812	FID Resp: 1.00
Engine Cycle:	Diesel	Cell: 8 Bag Cart: 1	H= 0.132 C= 0.868 O= 0.000 X= 0.000	
Engine S/N:	06RE001123			

Test Numbers
Cold: BASE C1 Hot: BASE H2

Brake-Specific Emission Results

BSHC (Cell)	0.062	g/hp-hr	0.083	g/kW-hr
CO	2.322	g/hp-hr	3.114	g/kW-hr
NOx (Cell)	4.905	g/hp-hr	6.577	g/kW-hr
Particulate	0.183	g/hp-hr	0.246	g/kW-hr
CO2	547.0	g/hp-hr	733.49	g/kW-hr
BSFC	0.382	lb/hp-hr	0.232	kg/kW-hr
Work:	24.40	hp-hr	18.19	kW-hr
Reference Work:	24.38	hp-hr	18.18	kW-hr

Analyzed: 02/09/2006 13:28

Southwest Research Institute - Department of Emissions Research
EPA Hot Transient Emission Test Results
Project No. 3-11929-001

Engine Model:	1991 Detroit Diesel S60	Test No.: BASE H3		DIESEL 2D, EM-5652-F
Engine Desc.:	12.7 L (775 CID) 6	Date: 02/09/2006	Time: 11:28	HCR: 1.812 FID Resp: 1.00
Engine Cycle:	Diesel	Program HDT: 4.12-R		H= 0.132 C= 0.868 O= 0.000 X= 0.000
Engine S/N:	06RE001123	Cell: 8	Bag Cart: 1	

Ambient/Test Cell Conditions

Barometer:	29.34	in Hg	99.3 kPa
Engine Inlet Air			
Temperature:	73.0	°F	22.8 °C
Dew Point:	57.1	°F	13.9 °C
Abs. Humidity:	71.2	gr/lb	10.2 g/kg
Rel. Humidity:	57	%	
Dilution Air:			
Temperature:	76.0	°F	24.4 °C
Abs. Humidity	61.5	gr/lb	8.8 g/kg
Rel. Humidity:	45	%	

Measured Gaseous Data

	Meter	Range	Concentration		
HC Sample	n/a		10.08	ppm	
HC Bckgrd	n/a		7.90	ppm	
CO Sample	41.4	2	40.28	ppm	(Dry)
CO Bckgrd	0.1	2	0.09	ppm	
NOx Sample	n/a		51.09	ppm	(Dry)
NOx Bckgrd	1.2	1	0.30	ppm	
CO2 Sample	74.5	1	0.6362	%	(Wet)
CO2 Bckgrd	9.3	1	0.0512	%	

Corrected Concentrations

HC	2.55	ppm
CO	39.12	ppm
NOx	49.80	ppm
CO2	0.5874	%

Mass Emissions

HC			1.833	grams
CO			56.855	grams
NOx			117.715	grams
Particulate			4.416	grams
CO2			13.415	kg
Fuel	9.37	lb	4.25	kg

Sample Flows

	scfm	scmm
Blower 1 Rate:	2,176.4	61.64
Blower 2 Rate:	0.0	0.00
90 mm System:		
Gas Meter 1:	2.26	0.06
Gas Meter 2:	4.02	0.11
Sample Rate:	1.76	0.05
Total Flow Rate:	2,178.16	61.69

Particulate Data

Filter Number:	4155.0 (pair)	
Weight Gain:	3.560	mg
Sample Multiplier:	1.240	

Correction Factors

NOx Humidity CF:	0.990
Dry-to-Wet CF, Sample:	0.980
Dry-to-Wet CF, Bckgrd:	0.986
Dilution Factor:	21.17

Test Cycle Data

Sample Time:	1,214.20	sec		
Work:	24.32	hp-hr	18.14	kW-hr
Reference Work:	24.38	hp-hr	18.18	kW-hr
Total Volume (Vmix):	44,078.6	scf	1,248.33	scm

Brake-Specific Emission Results

BSHC (Cell)	0.075	g/hp-hr	0.101	g/kW-hr
CO	2.338	g/hp-hr	3.135	g/kW-hr
NOx (Cell)	4.840	g/hp-hr	6.491	g/kW-hr
Particulate	0.182	g/hp-hr	0.243	g/kW-hr
CO2	551.6	g/hp-hr	739.71	g/kW-hr
BSFC	0.385	lb/hp-hr	0.234	kg/kW-hr

Southwest Research Institute - Department of Emissions Research
Composite Transient Emission Test Results
Project No. 3-11929-001

Engine Model:	1991 Detroit Diesel S60	Date: 02/09/2006 Time: 09:28	DIESEL 2D, EM-5652-F	
Engine Desc.:	12.7 L (775 CID) 6	Program HDT: 4.12-R	HCR: 1.812	FID Resp: 1.00
Engine Cycle:	Diesel	Cell: 8 Bag Cart: 1	H= 0.132 C= 0.868 O= 0.000 X= 0.000	
Engine S/N:	06RE001123			

Test Numbers
Cold: BASE C1 Hot: BASE H3

Brake-Specific Emission Results

BSHC (Cell)	0.077	g/hp-hr	0.104	g/kW-hr
CO	2.411	g/hp-hr	3.234	g/kW-hr
NOx (Cell)	4.942	g/hp-hr	6.627	g/kW-hr
Particulate	0.182	g/hp-hr	0.244	g/kW-hr
CO2	554.3	g/hp-hr	743.30	g/kW-hr
BSFC	0.387	lb/hp-hr	0.235	kg/kW-hr
Work:	24.39	hp-hr	18.19	kW-hr
Reference Work:	24.38	hp-hr	18.18	kW-hr

Analyzed: 02/09/2006 13:28

Southwest Research Institute - Department of Emissions Research
EPA Cold Transient Emission Test Results
Project No. 3-11929-001

Engine Model:	1991 Detroit Diesel S60	Test No.:	BLEND 1-C1	DIESEL 2D, EM-5870-F	
Engine Desc.:	12.7 L (775 CID) 6	Date: 02/10/2006	Time: 09:50	HCR: 1.812	FID Resp: 1.00
Engine Cycle:	Diesel	Program HDT:	4.12-R	H= 0.132 C= 0.868 O= 0.000 X= 0.000	
Engine S/N:	06RE001123	Cell: 8	Bag Cart: 1		

Ambient/Test Cell Conditions

Barometer:	29.06	in Hg	98.4 kPa
Engine Inlet Air			
Temperature:	71.0	°F	21.7 °C
Dew Point:	55.6	°F	13.1 °C
Abs. Humidity:	68.0	gr/lb	9.7 g/kg
Rel. Humidity:	58	%	
Dilution Air:			
Temperature:	80.0	°F	26.7 °C
Abs. Humidity	75.3	gr/lb	10.8 g/kg
Rel. Humidity:	48	%	

Measured Gaseous Data

	Meter	Range	Concentration		
HC Sample	n/a		8.66	ppm	
HC Bckgrd	n/a		5.50	ppm	
CO Sample	51.5	2	50.31	ppm	(Dry)
CO Bckgrd	0.4	2	0.37	ppm	
NOx Sample	n/a		62.02	ppm	(Dry)
NOx Bckgrd	1.1	1	0.28	ppm	
CO2 Sample	76.7	1	0.6665	%	(Wet)
CO2 Bckgrd	9.4	1	0.0518	%	

Corrected Concentrations

HC	3.43	ppm
CO	48.55	ppm
NOx	60.32	ppm
CO2	0.6173	%

Mass Emissions

HC	2.446	grams		
CO	70.033	grams		
NOx	140.395	grams		
Particulate	4.517	grams		
CO2	13.992	kg		
Fuel	9.78 lb		4.44	kg

Sample Flows

	scfm	scmm
Blower 1 Rate:	2,160.1	61.18
Blower 2 Rate:	0.0	0.00
90 mm System:		
Gas Meter 1:	2.22	0.06
Gas Meter 2:	3.96	0.11
Sample Rate:	1.74	0.05
Total Flow Rate:	2,161.83	61.22

Particulate Data

Filter Number:	4156.0 (pair)	
Weight Gain:	3.627	mg
Sample Multiplier:	1.245	

Correction Factors

NOx Humidity CF:	0.982
Dry-to-Wet CF, Sample:	0.977
Dry-to-Wet CF, Bckgrd:	0.983
Dilution Factor:	20.19

Test Cycle Data

Sample Time:	1,214.30	sec		
Work:	24.74	hp-hr	18.45	kW-hr
Reference Work:	24.38	hp-hr	18.18	kW-hr
Total Volume (Vmix):	43,751.9	scf	1,239.08	scm

Brake-Specific Emission Results

BSHC (Cell)	0.099	g/hp-hr	0.133	g/kW-hr
CO	2.831	g/hp-hr	3.796	g/kW-hr
NOx (Cell)	5.675	g/hp-hr	7.610	g/kW-hr
Particulate	0.183	g/hp-hr	0.245	g/kW-hr
CO2	565.6	g/hp-hr	758.44	g/kW-hr
BSFC	0.395	lb/hp-hr	0.241	kg/kW-hr

Southwest Research Institute - Department of Emissions Research
EPA Cold Transient Emission Test Results
Project No. 3-11929-001

Engine Model:	1991 Detroit Diesel S60	Test No.:	BLEND 1-H1	DIESEL 2D, EM-5870-F	
Engine Desc.:	12.7 L (775 CID) 6	Date: 02/10/2006	Time: 10:30	HCR: 1.812	FID Resp: 1.00
Engine Cycle:	Diesel	Program HDT:	4.12-R	H= 0.132 C= 0.868 O= 0.000 X= 0.000	
Engine S/N:	06RE001123	Cell: 8	Bag Cart: 1		

Ambient/Test Cell Conditions

Barometer:	29.06	in Hg	98.4 kPa
Engine Inlet Air			
Temperature:	72.0	°F	22.2 °C
Dew Point:	54.5	°F	12.5 °C
Abs. Humidity:	65.3	gr/lb	9.3 g/kg
Rel. Humidity:	54	%	
Dilution Air:			
Temperature:	79.0	°F	26.1 °C
Abs. Humidity	71.9	gr/lb	10.3 g/kg
Rel. Humidity:	47	%	

Measured Gaseous Data

	Meter	Range	Concentration		
HC Sample	n/a		8.98	ppm	
HC Bckgrd	n/a		6.50	ppm	
CO Sample	39.8	2	38.69	ppm	(Dry)
CO Bckgrd	0.3	2	0.28	ppm	
NOx Sample	n/a		51.90	ppm	(Dry)
NOx Bckgrd	0.9	1	0.23	ppm	
CO2 Sample	74.0	1	0.6295	%	(Wet)
CO2 Bckgrd	9.4	1	0.0518	%	

Corrected Concentrations

HC	2.78	ppm
CO	37.37	ppm
NOx	50.54	ppm
CO2	0.5801	%

Mass Emissions

HC		1.977	grams	
CO		53.736	grams	
NOx		116.437	grams	
Particulate		4.258	grams	
CO2		13.107	kg	
Fuel	9.15 lb		4.15	kg

Sample Flows

	scfm	scmm
Blower 1 Rate:	2,151.8	60.94
Blower 2 Rate:	0.0	0.00
90 mm System:		
Gas Meter 1:	2.21	0.06
Gas Meter 2:	3.93	0.11
Sample Rate:	1.72	0.05
Total Flow Rate:	2,153.51	60.99

Particulate Data

Filter Number:	4202.0 (pair)	
Weight Gain:	3.397	mg
Sample Multiplier:	1.253	

Correction Factors

NOx Humidity CF:	0.975
Dry-to-Wet CF, Sample:	0.978
Dry-to-Wet CF, Bckgrd:	0.984
Dilution Factor:	21.40

Test Cycle Data

Sample Time:	1,215.00	sec		
Work:	24.30	hp-hr	18.12	kW-hr
Reference Work:	24.38	hp-hr	18.18	kW-hr
Total Volume (Vmix):	43,608.6	scf	1,235.02	scm

Brake-Specific Emission Results

BSHC (Cell)	0.081	g/hp-hr	0.109	g/kW-hr
CO	2.211	g/hp-hr	2.965	g/kW-hr
NOx (Cell)	4.792	g/hp-hr	6.426	g/kW-hr
Particulate	0.175	g/hp-hr	0.235	g/kW-hr
CO2	539.4	g/hp-hr	723.32	g/kW-hr
BSFC	0.377	lb/hp-hr	0.229	kg/kW-hr

Southwest Research Institute - Department of Emissions Research
Composite Transient Emission Test Results
Project No. 3-11929-001

Engine Model:	1991 Detroit Diesel S60	Date: 02/10/2006 Time: 09:50	DIESEL 2D, EM-5870-F	
Engine Desc.:	12.7 L (775 CID) 6	Program HDT: 4.12-R	HCR: 1.812	FID Resp: 1.00
Engine Cycle:	Diesel	Cell: 8 Bag Cart: 1	H= 0.132 C= 0.868 O= 0.000 X= 0.000	
Engine S/N:	06RE001123			

Test Numbers
Cold: BLEND 1-C1 Hot: BLEND 1-H1

Brake-Specific Emission Results

BSHC (Cell)	0.084	g/hp-hr	0.113	g/kW-hr
CO	2.301	g/hp-hr	3.086	g/kW-hr
NOx (Cell)	4.920	g/hp-hr	6.598	g/kW-hr
Particulate	0.176	g/hp-hr	0.236	g/kW-hr
CO2	543.2	g/hp-hr	728.42	g/kW-hr
BSFC	0.379	lb/hp-hr	0.231	kg/kW-hr
Work:	24.36	hp-hr	18.17	kW-hr
Reference Work:	24.38	hp-hr	18.18	kW-hr

Analyzed: 02/10/2006 13:17

Southwest Research Institute - Department of Emissions Research
EPA Hot Transient Emission Test Results
Project No. 3-11929-001

Engine Model:	1991 Detroit Diesel S60	Test No.:	BLEND 1-H2	DIESEL 2D, EM-5870-F	
Engine Desc.:	12.7 L (775 CID) 6	Date: 02/10/2006	Time: 11:10	HCR: 1.812	FID Resp: 1.00
Engine Cycle:	Diesel	Program HDT:	4.12-R	H= 0.132 C= 0.868 O= 0.000 X= 0.000	
Engine S/N:	06RE001123	Cell: 8	Bag Cart: 1		

Ambient/Test Cell Conditions

Barometer:	29.06	in Hg	98.4 kPa
Engine Inlet Air			
Temperature:	73.0	°F	22.8 °C
Dew Point:	54.9	°F	12.7 °C
Abs. Humidity:	66.3	gr/lb	9.5 g/kg
Rel. Humidity:	53	%	
Dilution Air:			
Temperature:	78.0	°F	25.6 °C
Abs. Humidity	73.6	gr/lb	10.5 g/kg
Rel. Humidity:	50	%	

Measured Gaseous Data

	Meter	Range	Concentration		
HC Sample	n/a		8.33	ppm	
HC Bckgrd	n/a		5.90	ppm	
CO Sample	40.5	2	39.38	ppm	(Dry)
CO Bckgrd	0.2	2	0.19	ppm	
NOx Sample	n/a		51.81	ppm	(Dry)
NOx Bckgrd	0.5	1	0.13	ppm	
CO2 Sample	74.1	1	0.6308	%	(Wet)
CO2 Bckgrd	9.3	1	0.0512	%	

Corrected Concentrations

HC	2.71	ppm
CO	38.10	ppm
NOx	50.53	ppm
CO2	0.5820	%

Mass Emissions

HC		1.917	grams	
CO		54.637	grams	
NOx		116.407	grams	
Particulate		4.416	grams	
CO2		13.117	kg	
Fuel	9.16 lb		4.15	kg

Sample Flows

	scfm	scmm
Blower 1 Rate:	2,147.8	60.83
Blower 2 Rate:	0.0	0.00
90 mm System:		
Gas Meter 1:	2.21	0.06
Gas Meter 2:	4.00	0.11
Sample Rate:	1.79	0.05
Total Flow Rate:	2,149.62	60.88

Particulate Data

Filter Number:	4203.0 (pair)	
Weight Gain:	3.676	mg
Sample Multiplier:	1.201	

Correction Factors

NOx Humidity CF:	0.978
Dry-to-Wet CF, Sample:	0.978
Dry-to-Wet CF, Bckgrd:	0.983
Dilution Factor:	21.35

Test Cycle Data

Sample Time:	1,214.20	sec		
Work:	24.32	hp-hr	18.14	kW-hr
Reference Work:	24.38	hp-hr	18.18	kW-hr
Total Volume (Vmix):	43,501.2	scf	1,231.98	scm

Brake-Specific Emission Results

BSHC (Cell)	0.079	g/hp-hr	0.106	g/kW-hr
CO	2.247	g/hp-hr	3.013	g/kW-hr
NOx (Cell)	4.786	g/hp-hr	6.419	g/kW-hr
Particulate	0.182	g/hp-hr	0.244	g/kW-hr
CO2	539.4	g/hp-hr	723.28	g/kW-hr
BSFC	0.377	lb/hp-hr	0.229	kg/kW-hr

Southwest Research Institute - Department of Emissions Research
Composite Transient Emission Test Results
Project No. 3-11929-001

Engine Model:	1991 Detroit Diesel S60	Date: 02/10/2006 Time: 09:50	DIESEL 2D, EM-5870-F	
Engine Desc.:	12.7 L (775 CID) 6	Program HDT: 4.12-R	HCR: 1.812	FID Resp: 1.00
Engine Cycle:	Diesel	Cell: 8 Bag Cart: 1	H= 0.132 C= 0.868 O= 0.000 X= 0.000	
Engine S/N:	06RE001123			

Test Numbers
Cold: BLEND 1-C1 Hot: BLEND 1-H2

Brake-Specific Emission Results

BSHC (Cell)	0.082	g/hp-hr	0.110	g/kW-hr
CO	2.331	g/hp-hr	3.126	g/kW-hr
NOx (Cell)	4.915	g/hp-hr	6.591	g/kW-hr
Particulate	0.182	g/hp-hr	0.244	g/kW-hr
CO2	543.2	g/hp-hr	728.38	g/kW-hr
BSFC	0.379	lb/hp-hr	0.231	kg/kW-hr
Work:	24.38	hp-hr	18.18	kW-hr
Reference Work:	24.38	hp-hr	18.18	kW-hr

Analyzed: 02/10/2006 13:17

Southwest Research Institute - Department of Emissions Research
EPA Hot Transient Emission Test Results
Project No. 3-11929-001

Engine Model:	1991 Detroit Diesel S60	Test No.:	BLEND 1-H3	DIESEL 2D, EM-5870-F	
Engine Desc.:	12.7 L (775 CID) 6	Date: 02/10/2006	Time: 11:50	HCR: 1.812	FID Resp: 1.00
Engine Cycle:	Diesel	Program HDT:	4.12-R	H= 0.132 C= 0.868 O= 0.000 X= 0.000	
Engine S/N:	06RE001123	Cell: 8	Bag Cart: 1		

Ambient/Test Cell Conditions

Barometer:	29.06	in Hg	98.4 kPa
Engine Inlet Air			
Temperature:	72.0	°F	22.2 °C
Dew Point:	54.9	°F	12.7 °C
Abs. Humidity:	66.3	gr/lb	9.5 g/kg
Rel. Humidity:	55	%	
Dilution Air:			
Temperature:	79.0	°F	26.1 °C
Abs. Humidity	71.9	gr/lb	10.3 g/kg
Rel. Humidity:	47	%	

Measured Gaseous Data

	Meter	Range	Concentration		
HC Sample	n/a		9.43	ppm	
HC Bckgrd	n/a		7.60	ppm	
CO Sample	40.0	2	38.89	ppm	(Dry)
CO Bckgrd	0.7	2	0.66	ppm	
NOx Sample	n/a		51.04	ppm	(Dry)
NOx Bckgrd	0.5	1	0.13	ppm	
CO2 Sample	73.5	1	0.6228	%	(Wet)
CO2 Bckgrd	8.9	1	0.0489	%	

Corrected Concentrations

HC	2.18	ppm
CO	37.22	ppm
NOx	49.80	ppm
CO2	0.5762	%

Mass Emissions

HC		1.545	grams	
CO		53.348	grams	
NOx		114.665	grams	
Particulate		4.450	grams	
CO2		12.978	kg	
Fuel	9.06 lb		4.11	kg

Sample Flows

	scfm	scmm
Blower 1 Rate:	2,147.0	60.80
Blower 2 Rate:	0.0	0.00
90 mm System:		
Gas Meter 1:	2.23	0.06
Gas Meter 2:	4.01	0.11
Sample Rate:	1.78	0.05
Total Flow Rate:	2,148.79	60.85

Particulate Data

Filter Number:	4204.0 (pair)	
Weight Gain:	3.695	mg
Sample Multiplier:	1.204	

Correction Factors

NOx Humidity CF:	0.978
Dry-to-Wet CF, Sample:	0.978
Dry-to-Wet CF, Bckgrd:	0.984
Dilution Factor:	21.62

Test Cycle Data

Sample Time:	1,214.00	sec		
Work:	24.32	hp-hr	18.14	kW-hr
Reference Work:	24.38	hp-hr	18.18	kW-hr
Total Volume (Vmix):	43,477.1	scf	1,231.30	scm

Brake-Specific Emission Results

BSHC (Cell)	0.064	g/hp-hr	0.085	g/kW-hr
CO	2.194	g/hp-hr	2.942	g/kW-hr
NOx (Cell)	4.715	g/hp-hr	6.323	g/kW-hr
Particulate	0.183	g/hp-hr	0.245	g/kW-hr
CO2	533.6	g/hp-hr	715.63	g/kW-hr
BSFC	0.373	lb/hp-hr	0.227	kg/kW-hr

Southwest Research Institute - Department of Emissions Research
Composite Transient Emission Test Results
Project No. 3-11929-001

Engine Model:	1991 Detroit Diesel S60	Date: 02/10/2006 Time: 09:50	DIESEL 2D, EM-5870-F	
Engine Desc.:	12.7 L (775 CID) 6	Program HDT: 4.12-R	HCR: 1.812	FID Resp: 1.00
Engine Cycle:	Diesel	Cell: 8 Bag Cart: 1	H= 0.132 C= 0.868 O= 0.000 X= 0.000	
Engine S/N:	06RE001123			

Test Numbers
Cold: BLEND 1-C1 Hot: BLEND 1-H3

Brake-Specific Emission Results

BSHC (Cell)	0.069	g/hp-hr	0.092	g/kW-hr
CO	2.286	g/hp-hr	3.066	g/kW-hr
NOx (Cell)	4.854	g/hp-hr	6.509	g/kW-hr
Particulate	0.183	g/hp-hr	0.245	g/kW-hr
CO2	538.3	g/hp-hr	721.84	g/kW-hr
BSFC	0.376	lb/hp-hr	0.229	kg/kW-hr
Work:	24.38	hp-hr	18.18	kW-hr
Reference Work:	24.38	hp-hr	18.18	kW-hr

Analyzed: 02/10/2006 13:17

Southwest Research Institute - Department of Emissions Research
EPA Cold Transient Emission Test Results
Project No. 3-11929-001

Engine Model:	1991 Detroit Diesel S60	Test No.:	BASE C2	DIESEL 2D, EM-5652-F	
Engine Desc.:	12.7 L (775 CID) 6	Date: 02/13/2006	Time: 09:30	HCR: 1.812	FID Resp: 1.00
Engine Cycle:	Diesel	Program HDT:	4.12-R	H= 0.132 C= 0.868 O= 0.000 X= 0.000	
Engine S/N:	06RE001123	Cell: 8	Bag Cart: 1		

Ambient/Test Cell Conditions

Barometer:	29.52	in Hg	100.0	kPa
Engine Inlet Air				
Temperature:	72.0	°F	22.2	°C
Dew Point:	54.5	°F	12.5	°C
Abs. Humidity:	64.3	gr/lb	9.2	g/kg
Rel. Humidity:	54	%		
Dilution Air:				
Temperature:	75.0	°F	23.9	°C
Abs. Humidity	36.4	gr/lb	5.2	g/kg
Rel. Humidity:	28	%		

Measured Gaseous Data

	Meter	Range	Concentration		
HC Sample	n/a		6.39	ppm	
HC Bckgrd	n/a		3.70	ppm	
CO Sample	54.5	2	53.30	ppm	(Dry)
CO Bckgrd	0.5	2	0.47	ppm	
NOx Sample	n/a		63.17	ppm	(Dry)
NOx Bckgrd	0.9	1	0.23	ppm	
CO2 Sample	76.7	1	0.6665	%	(Wet)
CO2 Bckgrd	9.3	1	0.0512	%	

Corrected Concentrations

HC	2.87	ppm
CO	51.70	ppm
NOx	62.05	ppm
CO2	0.6178	%

Mass Emissions

HC	2.073	grams		
CO	75.511	grams		
NOx	144.824	grams		
Particulate	4.377	grams		
CO2	14.180	kg		
Fuel	9.92	lb	4.50	kg

Sample Flows

	scfm	scmm
Blower 1 Rate:	2,187.2	61.94
Blower 2 Rate:	0.0	0.00
90 mm System:		
Gas Meter 1:	2.19	0.06
Gas Meter 2:	4.03	0.11
Sample Rate:	1.84	0.05
Total Flow Rate:	2,189.04	61.99

Particulate Data

Filter Number:	4205.0 (pair)	
Weight Gain:	3.678	mg
Sample Multiplier:	1.190	

Correction Factors

NOx Humidity CF:	0.973
Dry-to-Wet CF, Sample:	0.986
Dry-to-Wet CF, Bckgrd:	0.992
Dilution Factor:	20.18

Test Cycle Data

Sample Time:	1,214.20	sec		
Work:	24.92	hp-hr	18.58	kW-hr
Reference Work:	24.38	hp-hr	18.18	kW-hr
Total Volume (Vmix):	44,298.9	scf	1,254.57	scm

Brake-Specific Emission Results

BSHC (Cell)	0.083	g/hp-hr	0.112	g/kW-hr
CO	3.030	g/hp-hr	4.063	g/kW-hr
NOx (Cell)	5.812	g/hp-hr	7.793	g/kW-hr
Particulate	0.176	g/hp-hr	0.236	g/kW-hr
CO2	569.0	g/hp-hr	763.08	g/kW-hr
BSFC	0.398	lb/hp-hr	0.242	kg/kW-hr

Southwest Research Institute - Department of Emissions Research
EPA Hot Transient Emission Test Results
Project No. 3-11929-001

Engine Model:	1991 Detroit Diesel S60	Test No.:	BASE H4	DIESEL 2D, EM-5652-F	
Engine Desc.:	12.7 L (775 CID) 6	Date: 02/13/2006	Time: 10:10	HCR: 1.812	FID Resp: 1.00
Engine Cycle:	Diesel	Program HDT:	4.12-R	H= 0.132 C= 0.868 O= 0.000 X= 0.000	
Engine S/N:	06RE001123	Cell: 8	Bag Cart: 1		

Ambient/Test Cell Conditions

Barometer:	29.52	in Hg	100.0 kPa
Engine Inlet Air			
Temperature:	72.0	°F	22.2 °C
Dew Point:	55.9	°F	13.3 °C
Abs. Humidity:	67.7	gr/lb	9.7 g/kg
Rel. Humidity:	57	%	
Dilution Air:			
Temperature:	75.0	°F	23.9 °C
Abs. Humidity	36.4	gr/lb	5.2 g/kg
Rel. Humidity:	28	%	

Measured Gaseous Data

	Meter	Range	Concentration		
HC Sample	n/a		6.50	ppm	
HC Bckgrd	n/a		4.10	ppm	
CO Sample	37.8	2	36.71	ppm	(Dry)
CO Bckgrd	0.1	2	0.09	ppm	
NOx Sample	n/a		51.81	ppm	(Dry)
NOx Bckgrd	1.0	1	0.25	ppm	
CO2 Sample	73.1	1	0.6175	%	(Wet)
CO2 Bckgrd	9.0	1	0.0494	%	

Corrected Concentrations

HC	2.59	ppm
CO	35.86	ppm
NOx	50.85	ppm
CO2	0.5704	%

Mass Emissions

HC	1.870	grams		
CO	52.469	grams		
NOx	119.936	grams		
Particulate	4.273	grams		
CO2	13.113	kg		
Fuel	9.15 lb		4.15 kg	

Sample Flows

	scfm	scmm
Blower 1 Rate:	2,189.8	62.02
Blower 2 Rate:	0.0	0.00
90 mm System:		
Gas Meter 1:	2.17	0.06
Gas Meter 2:	3.96	0.11
Sample Rate:	1.78	0.05
Total Flow Rate:	2,191.58	62.07

Particulate Data

Filter Number:	4299.0 (pair)	
Weight Gain:	3.478	mg
Sample Multiplier:	1.228	

Correction Factors

NOx Humidity CF:	0.981
Dry-to-Wet CF, Sample:	0.986
Dry-to-Wet CF, Bckgrd:	0.992
Dilution Factor:	21.83

Test Cycle Data

Sample Time:	1,214.90	sec		
Work:	24.34	hp-hr	18.15	kW-hr
Reference Work:	24.38	hp-hr	18.18	kW-hr
Total Volume (Vmix):	44,375.8	scf	1,256.75	scm

Brake-Specific Emission Results

BSHC (Cell)	0.077	g/hp-hr	0.103	g/kW-hr
CO	2.156	g/hp-hr	2.891	g/kW-hr
NOx (Cell)	4.928	g/hp-hr	6.608	g/kW-hr
Particulate	0.176	g/hp-hr	0.235	g/kW-hr
CO2	538.8	g/hp-hr	722.48	g/kW-hr
BSFC	0.376	lb/hp-hr	0.229	kg/kW-hr

Southwest Research Institute - Department of Emissions Research
Composite Transient Emission Test Results
Project No. 3-11929-001

Engine Model:	1991 Detroit Diesel S60	Date: 02/13/2006 Time: 09:30	DIESEL 2D, EM-5652-F	
Engine Desc.:	12.7 L (775 CID) 6	Program HDT: 4.12-R	HCR: 1.812	FID Resp: 1.00
Engine Cycle:	Diesel	Cell: 8 Bag Cart: 1	H= 0.132 C= 0.868 O= 0.000 X= 0.000	
Engine S/N:	06RE001123			

Test Numbers
Cold: BASE C2 Hot: BASE H4

Brake-Specific Emission Results

BSHC (Cell)	0.078	g/hp-hr	0.104	g/kW-hr
CO	2.283	g/hp-hr	3.062	g/kW-hr
NOx (Cell)	5.056	g/hp-hr	6.781	g/kW-hr
Particulate	0.176	g/hp-hr	0.235	g/kW-hr
CO2	543.2	g/hp-hr	728.40	g/kW-hr
BSFC	0.379	lb/hp-hr	0.231	kg/kW-hr
Work:	24.42	hp-hr	18.21	kW-hr
Reference Work:	24.38	hp-hr	18.18	kW-hr

Analyzed: 02/13/2006 13:05

Southwest Research Institute - Department of Emissions Research
EPA Hot Transient Emission Test Results
Project No. 3-11929-001

Engine Model:	1991 Detroit Diesel S60	Test No.:	BASE H5	DIESEL 2D, EM-5652-F	
Engine Desc.:	12.7 L (775 CID) 6	Date: 02/13/2006	Time: 10:50	HCR: 1.812	FID Resp: 1.00
Engine Cycle:	Diesel	Program HDT:	4.12-R	H= 0.132 C= 0.868 O= 0.000 X= 0.000	
Engine S/N:	06RE001123	Cell: 8	Bag Cart: 1		

Ambient/Test Cell Conditions

Barometer:	29.52	in Hg	99.9 kPa
Engine Inlet Air			
Temperature:	72.0	°F	22.2 °C
Dew Point:	55.6	°F	13.1 °C
Abs. Humidity:	67.0	gr/lb	9.6 g/kg
Rel. Humidity:	56	%	
Dilution Air:			
Temperature:	75.0	°F	23.9 °C
Abs. Humidity	24.5	gr/lb	3.5 g/kg
Rel. Humidity:	19	%	

Measured Gaseous Data

	Meter	Range	Concentration		
HC Sample	n/a		6.61	ppm	
HC Bckgrd	n/a		4.30	ppm	
CO Sample	37.2	2	36.12	ppm	(Dry)
CO Bckgrd	0.2	2	0.19	ppm	
NOx Sample	n/a		51.14	ppm	(Dry)
NOx Bckgrd	1.1	1	0.28	ppm	
CO2 Sample	72.8	1	0.6135	%	(Wet)
CO2 Bckgrd	9.1	1	0.0500	%	

Corrected Concentrations

HC	2.51	ppm
CO	35.30	ppm
NOx	50.30	ppm
CO2	0.5658	%

Mass Emissions

HC		1.811	grams	
CO		51.636	grams	
NOx		118.400	grams	
Particulate		4.291	grams	
CO2		13.006	kg	
Fuel	9.08 lb		4.12	kg

Sample Flows

	scfm	scmm
Blower 1 Rate:	2,190.6	62.04
Blower 2 Rate:	0.0	0.00
90 mm System:		
Gas Meter 1:	2.17	0.06
Gas Meter 2:	3.95	0.11
Sample Rate:	1.77	0.05
Total Flow Rate:	2,192.33	62.09

Particulate Data

Filter Number:	4300 (pair)	
Weight Gain:	3.474	mg
Sample Multiplier:	1.235	

Correction Factors

NOx Humidity CF:	0.980
Dry-to-Wet CF, Sample:	0.989
Dry-to-Wet CF, Bckgrd:	0.994
Dilution Factor:	21.97

Test Cycle Data

Sample Time:	1,214.30	sec		
Work:	24.35	hp-hr	18.16	kW-hr
Reference Work:	24.38	hp-hr	18.18	kW-hr
Total Volume (Vmix):	44,369.1	scf	1,256.56	scm

Brake-Specific Emission Results

BSHC (Cell)	0.074	g/hp-hr	0.100	g/kW-hr
CO	2.121	g/hp-hr	2.844	g/kW-hr
NOx (Cell)	4.862	g/hp-hr	6.521	g/kW-hr
Particulate	0.176	g/hp-hr	0.236	g/kW-hr
CO2	534.1	g/hp-hr	716.27	g/kW-hr
BSFC	0.373	lb/hp-hr	0.227	kg/kW-hr

Southwest Research Institute - Department of Emissions Research
Composite Transient Emission Test Results
Project No. 3-11929-001

Engine Model:	1991 Detroit Diesel S60	Date: 02/13/2006	Time: 09:30	DIESEL 2D, EM-5652-F	
Engine Desc.:	12.7 L (775 CID) 6	Program HDT: 4.12-R		HCR: 1.812	FID Resp: 1.00
Engine Cycle:	Diesel	Cell: 8	Bag Cart: 1	H= 0.132 C= 0.868 O= 0.000 X= 0.000	
Engine S/N:	06RE001123				

Test Numbers
Cold: BASE C2 Hot: BASE H5

Brake-Specific Emission Results

BSHC (Cell)	0.076	g/hp-hr	0.101	g/kW-hr
CO	2.253	g/hp-hr	3.021	g/kW-hr
NOx (Cell)	5.001	g/hp-hr	6.706	g/kW-hr
Particulate	0.176	g/hp-hr	0.236	g/kW-hr
CO2	539.2	g/hp-hr	723.09	g/kW-hr
BSFC	0.376	lb/hp-hr	0.229	kg/kW-hr
Work:	24.43	hp-hr	18.22	kW-hr
Reference Work:	24.38	hp-hr	18.18	kW-hr

Analyzed: 02/13/2006 13:05

Southwest Research Institute - Department of Emissions Research
EPA Hot Transient Emission Test Results
Project No. 3-11929-001

Engine Model:	1991 Detroit Diesel S60	Test No.: BASE H6		DIESEL 2D, EM-5652-F
Engine Desc.:	12.7 L (775 CID) 6	Date: 02/13/2006	Time: 11:30	HCR: 1.812 FID Resp: 1.00
Engine Cycle:	Diesel	Program HDT: 4.12-R		H= 0.132 C= 0.868 O= 0.000 X= 0.000
Engine S/N:	06RE001123	Cell: 8	Bag Cart: 1	

Ambient/Test Cell Conditions

Barometer:	29.50	in Hg	99.9 kPa
Engine Inlet Air			
Temperature:	73.0	°F	22.8 °C
Dew Point:	55.7	°F	13.2 °C
Abs. Humidity:	67.2	gr/lb	9.6 g/kg
Rel. Humidity:	55	%	
Dilution Air:			
Temperature:	75.0	°F	23.9 °C
Abs. Humidity	32.4	gr/lb	4.6 g/kg
Rel. Humidity:	25	%	

Measured Gaseous Data

	Meter	Range	Concentration		
HC Sample	n/a		6.47	ppm	
HC Bckgrd	n/a		4.00	ppm	
CO Sample	40.0	2	38.89	ppm	(Dry)
CO Bckgrd	0.2	2	0.19	ppm	
NOx Sample	n/a		51.25	ppm	(Dry)
NOx Bckgrd	1.0	1	0.25	ppm	
CO2 Sample	73.8	1	0.6268	%	(Wet)
CO2 Bckgrd	9.1	1	0.0500	%	

Corrected Concentrations

HC	2.66	ppm
CO	37.93	ppm
NOx	50.34	ppm
CO2	0.5791	%

Mass Emissions

HC		1.913	grams	
CO		55.310	grams	
NOx		118.193	grams	
Particulate		4.284	grams	
CO2		13.269	kg	
Fuel	9.26 lb		4.20	kg

Sample Flows

	scfm	scmm
Blower 1 Rate:	2,183.4	61.83
Blower 2 Rate:	0.0	0.00
90 mm System:		
Gas Meter 1:	2.22	0.06
Gas Meter 2:	4.00	0.11
Sample Rate:	1.78	0.05
Total Flow Rate:	2,185.14	61.88

Particulate Data

Filter Number:	4301.0 (pair)	
Weight Gain:	3.490	mg
Sample Multiplier:	1.227	

Correction Factors

NOx Humidity CF:	0.980
Dry-to-Wet CF, Sample:	0.987
Dry-to-Wet CF, Bckgrd:	0.993
Dilution Factor:	21.50

Test Cycle Data

Sample Time:	1,214.30	sec		
Work:	24.35	hp-hr	18.16	kW-hr
Reference Work:	24.38	hp-hr	18.18	kW-hr
Total Volume (Vmix):	44,223.6	scf	1,252.44	scm

Brake-Specific Emission Results

BSHC (Cell)	0.079	g/hp-hr	0.105	g/kW-hr
CO	2.271	g/hp-hr	3.046	g/kW-hr
NOx (Cell)	4.854	g/hp-hr	6.509	g/kW-hr
Particulate	0.176	g/hp-hr	0.236	g/kW-hr
CO2	544.9	g/hp-hr	730.77	g/kW-hr
BSFC	0.380	lb/hp-hr	0.231	kg/kW-hr

Southwest Research Institute - Department of Emissions Research
Composite Transient Emission Test Results
Project No. 3-11929-001

Engine Model:	1991 Detroit Diesel S60	Date: 02/13/2006 Time: 09:30	DIESEL 2D, EM-5652-F	
Engine Desc.:	12.7 L (775 CID) 6	Program HDT: 4.12-R	HCR: 1.812	FID Resp: 1.00
Engine Cycle:	Diesel	Cell: 8 Bag Cart: 1	H= 0.132 C= 0.868 O= 0.000 X= 0.000	
Engine S/N:	06RE001123			

Test Numbers
Cold: BASE C2 Hot: BASE H6

Brake-Specific Emission Results

BSHC (Cell)	0.079	g/hp-hr	0.106	g/kW-hr
CO	2.382	g/hp-hr	3.194	g/kW-hr
NOx (Cell)	4.993	g/hp-hr	6.696	g/kW-hr
Particulate	0.176	g/hp-hr	0.236	g/kW-hr
CO2	548.4	g/hp-hr	735.47	g/kW-hr
BSFC	0.383	lb/hp-hr	0.233	kg/kW-hr
Work:	24.43	hp-hr	18.22	kW-hr
Reference Work:	24.38	hp-hr	18.18	kW-hr

Analyzed: 02/13/2006 13:05

Southwest Research Institute - Department of Emissions Research
EPA Cold Transient Emission Test Results
Project No. 3-11929-001

Engine Model:	1991 Detroit Diesel S60	Test No.: BASE C3		DIESEL 2D, EM-5652-F
Engine Desc.:	12.7 L (775 CID) 6	Date: 02/14/2006	Time: 09:30	HCR: 1.812 FID Resp: 1.00
Engine Cycle:	Diesel	Program HDT: 4.12-R		H= 0.132 C= 0.868 O= 0.000 X= 0.000
Engine S/N:	06RE001123	Cell: 8	Bag Cart: 1	

Ambient/Test Cell Conditions

Barometer:	29.18	in Hg	98.8 kPa
Engine Inlet Air			
Temperature:	72.0	°F	22.2 °C
Dew Point:	54.7	°F	12.6 °C
Abs. Humidity:	65.5	gr/lb	9.4 g/kg
Rel. Humidity:	54	%	
Dilution Air:			
Temperature:	76.0	°F	24.4 °C
Abs. Humidity	66.7	gr/lb	9.5 g/kg
Rel. Humidity:	48	%	

Measured Gaseous Data

	Meter	Range	Concentration		
HC Sample	n/a		7.41	ppm	
HC Bckgrd	n/a		4.80	ppm	
CO Sample	57.9	2	56.71	ppm	(Dry)
CO Bckgrd	0.8	2	0.75	ppm	
NOx Sample	n/a		63.57	ppm	(Dry)
NOx Bckgrd	1.2	1	0.30	ppm	
CO2 Sample	78.2	1	0.6877	%	(Wet)
CO2 Bckgrd	9.8	1	0.0541	%	

Corrected Concentrations

HC	2.86	ppm
CO	54.38	ppm
NOx	61.93	ppm
CO2	0.6364	%

Mass Emissions

HC		2.035	grams	
CO		78.434	grams	
NOx		143.209	grams	
Particulate		4.606	grams	
CO2		14.424	kg	
Fuel	10.09 lb		4.58	kg

Sample Flows

	scfm	scmm
Blower 1 Rate:	2,160.8	61.20
Blower 2 Rate:	0.0	0.00
90 mm System:		
Gas Meter 1:	2.20	0.06
Gas Meter 2:	3.95	0.11
Sample Rate:	1.75	0.05
Total Flow Rate:	2,162.56	61.24

Particulate Data

Filter Number:	4302 (pair)	
Weight Gain:	3.728	mg
Sample Multiplier:	1.236	

Correction Factors

NOx Humidity CF:	0.976
Dry-to-Wet CF, Sample:	0.979
Dry-to-Wet CF, Bckgrd:	0.985
Dilution Factor:	19.55

Test Cycle Data

Sample Time:	1,213.80	sec		
Work:	24.83	hp-hr	18.52	kW-hr
Reference Work:	24.38	hp-hr	18.18	kW-hr
Total Volume (Vmix):	43,748.5	scf	1,238.98	scm

Brake-Specific Emission Results

BSHC (Cell)	0.082	g/hp-hr	0.110	g/kW-hr
CO	3.159	g/hp-hr	4.236	g/kW-hr
NOx (Cell)	5.768	g/hp-hr	7.734	g/kW-hr
Particulate	0.185	g/hp-hr	0.249	g/kW-hr
CO2	580.9	g/hp-hr	779.01	g/kW-hr
BSFC	0.406	lb/hp-hr	0.247	kg/kW-hr

Southwest Research Institute - Department of Emissions Research
EPA Hot Transient Emission Test Results
Project No. 3-11929-001

Engine Model:	1991 Detroit Diesel S60	Test No.:	BASE H7	DIESEL 2D, EM-5652-F	
Engine Desc.:	12.7 L (775 CID) 6	Date: 02/14/2006	Time: 10:10	HCR: 1.812	FID Resp: 1.00
Engine Cycle:	Diesel	Program HDT:	4.12-R	H= 0.132 C= 0.868 O= 0.000 X= 0.000	
Engine S/N:	06RE001123	Cell: 8	Bag Cart: 1		

Ambient/Test Cell Conditions

Barometer:	29.18	in Hg	98.8	kPa
Engine Inlet Air				
Temperature:	72.0	°F	22.2	°C
Dew Point:	55.4	°F	13.0	°C
Abs. Humidity:	67.2	gr/lb	9.6	g/kg
Rel. Humidity:	56	%		
Dilution Air:				
Temperature:	77.0	°F	25.0	°C
Abs. Humidity	69.9	gr/lb	10.0	g/kg
Rel. Humidity:	49	%		

Measured Gaseous Data

	Meter	Range	Concentration		
HC Sample	n/a		8.24	ppm	
HC Bckgrd	n/a		5.70	ppm	
CO Sample	40.7	2	39.58	ppm	(Dry)
CO Bckgrd	0.7	2	0.66	ppm	
NOx Sample	n/a		53.31	ppm	(Dry)
NOx Bckgrd	1.6	1	0.40	ppm	
CO2 Sample	74.4	1	0.6348	%	(Wet)
CO2 Bckgrd	9.5	1	0.0523	%	

Corrected Concentrations

HC	2.81	ppm
CO	37.85	ppm
NOx	51.78	ppm
CO2	0.5850	%

Mass Emissions

HC		1.997	grams	
CO		54.498	grams	
NOx		120.031	grams	
Particulate		4.314	grams	
CO2		13.234	kg	
Fuel	9.24 lb		4.19	kg

Sample Flows

	scfm	scmm
Blower 1 Rate:	2,155.6	61.05
Blower 2 Rate:	0.0	0.00
90 mm System:		
Gas Meter 1:	2.20	0.06
Gas Meter 2:	4.00	0.11
Sample Rate:	1.80	0.05
Total Flow Rate:	2,157.41	61.10

Particulate Data

Filter Number:	4446.0 (pair)	
Weight Gain:	3.602	mg
Sample Multiplier:	1.198	

Correction Factors

NOx Humidity CF:	0.980
Dry-to-Wet CF, Sample:	0.978
Dry-to-Wet CF, Bckgrd:	0.984
Dilution Factor:	21.22

Test Cycle Data

Sample Time:	1,214.40	sec		
Work:	24.32	hp-hr	18.14	kW-hr
Reference Work:	24.38	hp-hr	18.18	kW-hr
Total Volume (Vmix):	43,665.9	scf	1,236.64	scm

Brake-Specific Emission Results

BSHC (Cell)	0.082	g/hp-hr	0.110	g/kW-hr
CO	2.241	g/hp-hr	3.005	g/kW-hr
NOx (Cell)	4.935	g/hp-hr	6.619	g/kW-hr
Particulate	0.177	g/hp-hr	0.238	g/kW-hr
CO2	544.2	g/hp-hr	729.72	g/kW-hr
BSFC	0.380	lb/hp-hr	0.231	kg/kW-hr

Southwest Research Institute - Department of Emissions Research
Composite Transient Emission Test Results
Project No. 3-11929-001

Engine Model:	1991 Detroit Diesel S60	Date: 02/14/2006 Time: 09:30	DIESEL 2D, EM-5652-F	
Engine Desc.:	12.7 L (775 CID) 6	Program HDT: 4.12-R	HCR: 1.812	FID Resp: 1.00
Engine Cycle:	Diesel	Cell: 8 Bag Cart: 1	H= 0.132 C= 0.868 O= 0.000 X= 0.000	
Engine S/N:	06RE001123			

Test Numbers
Cold: BASE C3 Hot: BASE H7

Brake-Specific Emission Results

BSHC (Cell)	0.082	g/hp-hr	0.110	g/kW-hr
CO	2.374	g/hp-hr	3.184	g/kW-hr
NOx (Cell)	5.056	g/hp-hr	6.781	g/kW-hr
Particulate	0.179	g/hp-hr	0.239	g/kW-hr
CO2	549.5	g/hp-hr	736.89	g/kW-hr
BSFC	0.384	lb/hp-hr	0.233	kg/kW-hr
Work:	24.39	hp-hr	18.19	kW-hr
Reference Work:	24.38	hp-hr	18.18	kW-hr

Analyzed: 02/14/2006 15:20

Southwest Research Institute - Department of Emissions Research
EPA Hot Transient Emission Test Results
Project No. 3-11929-001

Engine Model:	1991 Detroit Diesel S60	Test No.:	BASE H8	DIESEL 2D, EM-5652-F	
Engine Desc.:	12.7 L (775 CID) 6	Date: 02/14/2006	Time: 10:50	HCR: 1.812	FID Resp: 1.00
Engine Cycle:	Diesel	Program HDT:	4.12-R	H= 0.132 C= 0.868 O= 0.000 X= 0.000	
Engine S/N:	06RE001123	Cell: 8	Bag Cart: 1		

Ambient/Test Cell Conditions

Barometer:	29.19	in Hg	98.8 kPa
Engine Inlet Air			
Temperature:	73.0	°F	22.8 °C
Dew Point:	55.6	°F	13.1 °C
Abs. Humidity:	67.7	gr/lb	9.7 g/kg
Rel. Humidity:	54	%	
Dilution Air:			
Temperature:	78.0	°F	25.6 °C
Abs. Humidity	73.2	gr/lb	10.5 g/kg
Rel. Humidity:	50	%	

Measured Gaseous Data

	Meter	Range	Concentration		
HC Sample	n/a		7.36	ppm	
HC Bckgrd	n/a		4.80	ppm	
CO Sample	40.2	2	39.09	ppm	(Dry)
CO Bckgrd	0.3	2	0.28	ppm	
NOx Sample	n/a		52.89	ppm	(Dry)
NOx Bckgrd	1.6	1	0.40	ppm	
CO2 Sample	74.3	1	0.6335	%	(Wet)
CO2 Bckgrd	9.4	1	0.0518	%	

Corrected Concentrations

HC	2.79	ppm
CO	37.73	ppm
NOx	51.33	ppm
CO2	0.5841	%

Mass Emissions

HC	1.985	grams		
CO	54.411	grams		
NOx	119.349	grams		
Particulate	4.385	grams		
CO2	13.238	kg		
Fuel	9.24	lb	4.19	kg

Sample Flows

	scfm	scmm
Blower 1 Rate:	2,159.6	61.16
Blower 2 Rate:	0.0	0.00
90 mm System:		
Gas Meter 1:	2.20	0.06
Gas Meter 2:	4.01	0.11
Sample Rate:	1.81	0.05
Total Flow Rate:	2,161.37	61.21

Particulate Data

Filter Number:	4448.0 (pair)	
Weight Gain:	3.674	mg
Sample Multiplier:	1.193	

Correction Factors

NOx Humidity CF:	0.981
Dry-to-Wet CF, Sample:	0.978
Dry-to-Wet CF, Bckgrd:	0.983
Dilution Factor:	21.27

Test Cycle Data

Sample Time:	1,214.30	sec		
Work:	24.32	hp-hr	18.14	kW-hr
Reference Work:	24.38	hp-hr	18.18	kW-hr
Total Volume (Vmix):	43,742.5	scf	1,238.81	scm

Brake-Specific Emission Results

BSHC (Cell)	0.082	g/hp-hr	0.109	g/kW-hr
CO	2.237	g/hp-hr	3.000	g/kW-hr
NOx (Cell)	4.907	g/hp-hr	6.581	g/kW-hr
Particulate	0.180	g/hp-hr	0.242	g/kW-hr
CO2	544.3	g/hp-hr	729.97	g/kW-hr
BSFC	0.380	lb/hp-hr	0.231	kg/kW-hr

Southwest Research Institute - Department of Emissions Research
Composite Transient Emission Test Results
Project No. 3-11929-001

Engine Model:	1991 Detroit Diesel S60	Date: 02/14/2006 Time: 09:30	DIESEL 2D, EM-5652-F	
Engine Desc.:	12.7 L (775 CID) 6	Program HDT: 4.12-R	HCR: 1.812	FID Resp: 1.00
Engine Cycle:	Diesel	Cell: 8 Bag Cart: 1	H= 0.132 C= 0.868 O= 0.000 X= 0.000	
Engine S/N:	06RE001123			

Test Numbers
Cold: BASE C3 Hot: BASE H8

Brake-Specific Emission Results

BSHC (Cell)	0.082	g/hp-hr	0.109	g/kW-hr
CO	2.371	g/hp-hr	3.180	g/kW-hr
NOx (Cell)	5.033	g/hp-hr	6.749	g/kW-hr
Particulate	0.181	g/hp-hr	0.243	g/kW-hr
CO2	549.7	g/hp-hr	737.10	g/kW-hr
BSFC	0.384	lb/hp-hr	0.233	kg/kW-hr
Work:	24.39	hp-hr	18.19	kW-hr
Reference Work:	24.38	hp-hr	18.18	kW-hr

Analyzed: 02/14/2006 15:20

Southwest Research Institute - Department of Emissions Research
EPA Hot Transient Emission Test Results
Project No. 3-11929-001

Engine Model:	1991 Detroit Diesel S60	Test No.:	BASE H9	DIESEL 2D, EM-5652-F	
Engine Desc.:	12.7 L (775 CID) 6	Date: 02/14/2006	Time: 11:30	HCR: 1.812	FID Resp: 1.00
Engine Cycle:	Diesel	Program HDT:	4.12-R	H= 0.132 C= 0.868 O= 0.000 X= 0.000	
Engine S/N:	06RE001123	Cell: 8	Bag Cart: 1		

Ambient/Test Cell Conditions

Barometer:	29.18	in Hg	98.8 kPa
Engine Inlet Air			
Temperature:	73.0	°F	22.8 °C
Dew Point:	56.0	°F	13.3 °C
Abs. Humidity:	68.7	gr/lb	9.8 g/kg
Rel. Humidity:	55	%	
Dilution Air:			
Temperature:	77.0	°F	25.0 °C
Abs. Humidity	65.1	gr/lb	9.3 g/kg
Rel. Humidity:	46	%	

Measured Gaseous Data

	Meter	Range	Concentration		
HC Sample	n/a		7.20	ppm	
HC Bckgrd	n/a		4.80	ppm	
CO Sample	43.0	2	41.86	ppm	(Dry)
CO Bckgrd	1.4	2	1.31	ppm	
NOx Sample	n/a		51.57	ppm	(Dry)
NOx Bckgrd	1.8	1	0.45	ppm	
CO2 Sample	74.9	1	0.6416	%	(Wet)
CO2 Bckgrd	8.9	1	0.0489	%	

Corrected Concentrations

HC	2.63	ppm
CO	39.50	ppm
NOx	50.08	ppm
CO2	0.5950	%

Mass Emissions

HC		1.872	grams	
CO		56.953	grams	
NOx		116.721	grams	
Particulate		4.338	grams	
CO2		13.482	kg	
Fuel	9.41 lb		4.27	kg

Sample Flows

	scfm	scmm
Blower 1 Rate:	2,158.7	61.13
Blower 2 Rate:	0.0	0.00
90 mm System:		
Gas Meter 1:	2.20	0.06
Gas Meter 2:	4.01	0.11
Sample Rate:	1.81	0.05
Total Flow Rate:	2,160.48	61.19

Particulate Data

Filter Number:	4450.0 (pair)	
Weight Gain:	3.630	mg
Sample Multiplier:	1.195	

Correction Factors

NOx Humidity CF:	0.984
Dry-to-Wet CF, Sample:	0.979
Dry-to-Wet CF, Bckgrd:	0.985
Dilution Factor:	20.99

Test Cycle Data

Sample Time:	1,214.50	sec		
Work:	24.33	hp-hr	18.14	kW-hr
Reference Work:	24.38	hp-hr	18.18	kW-hr
Total Volume (Vmix):	43,731.6	scf	1,238.51	scm

Brake-Specific Emission Results

BSHC (Cell)	0.077	g/hp-hr	0.103	g/kW-hr
CO	2.341	g/hp-hr	3.139	g/kW-hr
NOx (Cell)	4.797	g/hp-hr	6.433	g/kW-hr
Particulate	0.178	g/hp-hr	0.239	g/kW-hr
CO2	554.1	g/hp-hr	743.09	g/kW-hr
BSFC	0.387	lb/hp-hr	0.235	kg/kW-hr

Southwest Research Institute - Department of Emissions Research
Composite Transient Emission Test Results
Project No. 3-11929-001

Engine Model:	1991 Detroit Diesel S60	Date: 02/14/2006 Time: 09:30	DIESEL 2D, EM-5652-F	
Engine Desc.:	12.7 L (775 CID) 6	Program HDT: 4.12-R	HCR: 1.812	FID Resp: 1.00
Engine Cycle:	Diesel	Cell: 8 Bag Cart: 1	H= 0.132 C= 0.868 O= 0.000 X= 0.000	
Engine S/N:	06RE001123			

Test Numbers
Cold: BASE C3 Hot: BASE H9

Brake-Specific Emission Results

BSHC (Cell)	0.078	g/hp-hr	0.104	g/kW-hr
CO	2.460	g/hp-hr	3.299	g/kW-hr
NOx (Cell)	4.938	g/hp-hr	6.623	g/kW-hr
Particulate	0.179	g/hp-hr	0.241	g/kW-hr
CO2	558.0	g/hp-hr	748.31	g/kW-hr
BSFC	0.390	lb/hp-hr	0.237	kg/kW-hr
Work:	24.40	hp-hr	18.20	kW-hr
Reference Work:	24.38	hp-hr	18.18	kW-hr

Analyzed: 02/14/2006 15:20