Urea-SCR Emission Control System for Stationary Applications

Final Deliverable Report

for:

New Technology Research and Development Program

582-11-13515-2019

Submitted by:

Nett Technologies Inc.

Principal Investigators:

John Popik
Mohammad Pournazeri

Project Manager:

Ivan Luke

June 28, 2013

The preparation of this report is based on work funded in part

by the State of Texas

through a Grant from the Texas Commission on Environmental Quality

Table of Contents

LIST OF TABLES ..... **III**

TABLE OF FIGURES ..... **IV**

ABSTRACT/EXECUTIVE SUMMARY **1**

INTRODUCTION / BACKGROUND **2**

PROJECT OBJECTIVES / TECHNICAL APPROACH **3**

TASKS **4**

TASK 1: DEVELOPMENT OF ETV VERIFICATION TEST PLAN 4
TASK 2: FINALIZATION AND BUILD OF PROTOTYPE SCR SYSTEMS 5
TASK 3: FIELD DURABILITY AND PRELIMINARY EMISSION REDUCTION TESTING 13
TASK 4: EPA VERIFICATION TESTING 17
TASK 5: REPORTING 21

DISCUSSION/OBSERVATIONS **23**

OBJECTIVES VS. RESULTS 23
CRITICAL ISSUES 23
TECHNICAL AND COMMERCIAL VIABILITY OF THE PROPOSED APPROACH 23
SCOPE FOR FUTURE WORK 23

INTELLECTUAL PROPERTIES/PUBLICATIONS/PRESENTATIONS **24**

SUMMARY/CONCLUSIONS **24**

CONTACT INFO **24**

List of Tables

Table 1: Generator Durability Loading Schedule 5

Table 2. 5-mode steady state emission test results for Prototype I on November 19, 2012 9

Table 3. 5-mode steady state emission test results for Prototype II on February 26, 2013..... 9

Table 4. 5-mode steady state emission test results for Prototype III on April 18, 2013 10

Table 5. Preliminary 5-mode steady state test results for 1000 hours aging prototype at 0 hours..... 15

Table 6. Preliminary 5-mode steady state test results for 1000 hours aging prototype at 750 hours..... 16

Table 7. Specifications of the engine used for SCR system verification testing 18

Table 8. EPA verification test matrix..... 18

Table 9. EPA Verification baseline testing emission reduction results by mode and pollutant emission rate (g/bhp-hr) 19

Table 10. EPA Verification aged testing emission reduction results by mode and pollutant emission rate (g/bhp-hr) 20

Table 11. EPA Verification degreened testing emission reduction results by mode and pollutant emission rate (g/bhp-hr) 20

Table of Figures

Figure 1: NO_x reduction by Nett SCR system 2

Figure 2. The proposed urea-SCR system schematic drawing 7

Figure 3. Urea-SCR prototype I selected components 8

Figure 4. Urea-SCR prototype II selected components 8

Figure 5. Urea-SCR prototype III selected components 8

Figure 6. Nett SCR system performance improvement trend 11

Figure 7: Improvement in exhaust backpressure 11

Figure 8: SCR and DOC volumes for three prototypes 12

Figure 9: Final urea-SCR system prototype design (Prototype III) 13

Figure 10: Durability setup 14

Figure 11: Comparison between system performance at 0 hours and 750 hours 16

Figure 12: Emission reduction results for aged and de-greened prototypes 21

Abstract/Executive Summary

The objective of the project is to develop, test and verify a urea-Selective Catalytic Reduction (SCR) system for retrofitting diesel engines in stationary applications operating in Texas. The system proposed by Nett Technologies is based on a nitrogen oxides (NO_x) sensor and feed-forward control strategy. Using the NO_x sensor signal, in combination with an engine mass air flow (MAF) and temperature sensors, the necessary urea dosing rate is calculated by the control software.

The developed system comprises of a urea-SCR system whose performance is enhanced by a diesel oxidation catalyst (DOC) located upstream of the SCR. The DOC reduces the hydrocarbon (HC) and particulate matter (PM) emissions. Different design parameters are subject to optimization to improve system emission reduction performance and to meet the engine backpressure requirements. For this purpose, several in-house tests were performed on various substrate catalytic coatings and configurations. Based on the Environmental Protection Agency (EPA) SCR verification protocol, two systems were built with one designated to be exposed to 1000 hours of aging and a second to 25-125 hours of de-greening. After accumulating the required hours, both systems were sent to Environment Canada- ERMS for final performance testing.

The technology will be available for commercialization in nonattainment areas in Texas, therefore directly supporting the primary objective of the NTRD program. The project also meets all of the specific NTRD criteria.

Introduction / Background

A total of 21 counties in Texas, designated as nonattainment areas, fail to meet federal air quality standards. These comprise the metropolitan areas of Houston-Galveston-Brazoria, Dallas-Fort Worth, and Beaumont-Port Arthur for eight-hour ground level ozone and El Paso for particulate matter.

Air pollution from diesel vehicles has public health implications. Diesel exhaust contains toxic air pollutants that include PM and smog forming pollutants such as NO_x. Exposure to diesel exhaust can aggravate asthma, allergies and respiratory problems.

To date, there are no verified SCR systems for stationary application. Nett Technologies proposed to develop and verify a high performance urea-SCR system for diesel engines with relatively high PM and HC output operating in stationary applications (Tier-0 and newer engines).

The proposed system is expected to reduce NO_x emissions by 65-90% and PM emissions by over 25%. There is ample data in the published technical literature showing that NO_x conversions in excess of 90% have been achieved in steady-state operation and 65-90% under transient test conditions. The system is also expected to reduce HC emissions by 60-80% and CO emissions by 60-90% due to the presence of a DOC upstream of the SCR. Prototypes of the Nett system have consistently shown (Figure 1) NO_x reductions of 90% in laboratory steady-state emission tests. The incorporation of DOC upstream of the SCR increases the NO_2 to NO ratio in the exhaust gas which improves the NO_x reduction performance.

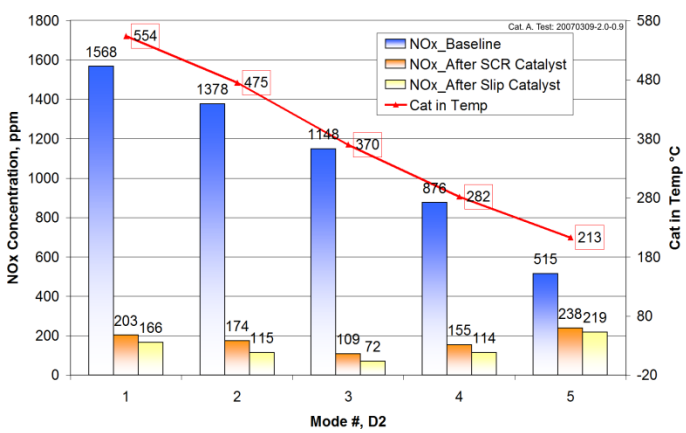

Figure 1: NO_x reduction by Nett SCR system

The proposed system uses a NO_x sensor-based strategy for urea injection control. The advanced control algorithm determines the amount of urea that needs to be injected based on the current NO_x concentration at the inlet to the SCR catalyst, the engine intake air flow, the exhaust gas temperature, and the predicted NO_x conversion rate computed for the given set of conditions based on the catalyst kinetics model.

Due to the sensor-based approach, the SCR system can be installed on a wide range of diesel engines without the need for costly engine mapping or connection to the engine ECU enabling installation on both electronic and mechanical engines. The system is also winterized so that it can operate in temperatures below -11°C.

Project Objectives / Technical Approach

The main objectives of this project are to develop, test and verify a urea-SCR system with a minimum NO_x reduction of 70% for retrofitting diesel engines operating in stationary applications with relatively high HC and PM output. The following tasks were accomplished to fulfill the projects objectives.

Task 1.0: Development of ETV Verification Test Plan

The primary objective of the task is to identify and initiate discussion with the appropriate agency within EPA which will accept Verification Application for NO_x control system on stationary engines.

Task 2.0: Finalization and Build of Prototype SCR Systems

This task includes general urea-SCR system configuration, identifying a genset for which the system is to be designed, acquisition of all necessary components and materials, fabrication, test setup preparation and system optimization through analytical and experimental studies. This task also includes onboard diagnostic (OBD) system development for SCR system monitoring and alarming.

Task 3.0: Field Durability and Preliminary Emission Testing

In this task, the durability and performance of the finalized urea-SCR prototype will be tested. This task include 1000 hours aging of the finalized urea-SCR prototype, 25 to 125 hours de-greening of a new identical urea-SCR prototype, emission reduction testing of both aged and de-greened units. The emission reduction testing will include all regulated emissions, ammonia slip, as well as fuel economy and other operational impacts.

Subtask 3.1: Prototype Aging

The urea-SCR prototype system will be installed on a 176 kW genset and aged for 1000 hours. During system durability testing, temperatures, pressures, inlet/outlet NO_x concentrations and error codes will be logged. The steady-state emission test and system functionality test will be performed during the aging process to monitor the system performance durability. The system will be uninstalled from the generator after completion of 1000 hours aging and it will be shipped to Environment Canada-ERMS for final verification testing.

Subtask 3.2: Prototype De-greening

An identical SCR prototype system will be installed on the same generator set as described in task 3.1 and it will be de-greened for 25 to 125 hours. All the system operating parameters including temperatures, pressures, inlet/outlet NO_x concentrations and error codes will be logged during system de-greening. The system will be uninstalled from the in-house generator after completion of 1000 hours aging and it will be shipped to Environment Canada-ERMS for final verification testing.

Task 4.0: EPA Verification Testing

Both 1000 hours aged and de-greened SCR prototypes will be tested in Environment Canada-ERMS laboratory and their performances are compared. The verification testing will be performed in accordance with the *"Generic Verification Protocol for Determination of Emissions Reductions from Selective Catalytic Reduction Control Technologies for Highway, Nonroad, and Stationary Use Diesel Engines"*.

Under the referenced protocol, the ISO 8178 D2 steady state will be run. Emissions of HC, carbon monoxide (CO), carbon dioxide (CO_2), NO_x, nitrogen oxide (NO), PM, soluble organic fraction (SOF), and ammonia (NH_3) slip will be measured over the three hot 5-mode steady-state cycle sequences using ultralow-sulfur diesel (ULSD) fuel for the baseline, aged and de-greened system testing. NO_2 will be reported as the difference between NO_x and NO. Brake-specific fuel consumption (BSFC) will be reported using the method of carbon balance. During the test runs, backpressure and SCR catalyst inlet and outlet temperatures will be recorded on a second-by-second basis.

Tasks

Task 1: Development of ETV Verification Test Plan

From the Grant Activities (Scope of Work):

> *"2.1. Task Statement: The PERFORMING PARTY will develop and receive EPA approval of a verification test plan for urea-SCR retrofit system in stationary applications.*
>
> *2.1.1. The PERFORMING PARTY will develop a draft test plan and submit it to EPA for approval.*
>
> *2.1.2. The PERFORMING PARTY will respond promptly to all requests for additional information or verification test plan changes from EPA, and will revise the draft verification test plan as necessary to address EPA's concerns and requirements. The PERFORMING PARTY will submit the revised verification test plan to EPA for approval.*
>
> *2.1.3. Schedule: The PERFORMING PARTY shall complete this task within 13 months of the signed Notice to Proceed Date as issued by TCEQ.*
>
> *2.1.4. Deliverables: The PERFORMING PARTY shall submit a report to the TCEQ upon completion of this task. This report will include but is not limited to the final EPA approved verification test plan.*
>
> *2.1.5. Approval to Proceed with Further Tasks: The TCEQ will determine whether additional tasks will be approved and funded depending upon the success of completing this task. The PERFORMING PARTY must receive written approval from TCEQ to proceed with any further tasks, in order for those tasks to be eligible for additional funding under this Agreement."*

Stationary engine verification protocols were reviewed in preparation for completing the first draft of the test verification plan. The EPA's Office of Air Quality & Planning Standards (OAQPS) was determined to be the point of contact and the NO_x Control Technologies for Stationary Combustion Sources was the applicable verification protocol. This protocol had strict requirements for quality assurance and control which affected the preparation of the test verification plan.

A preliminary design for the urea-SCR system was developed according to the requirements of the target market including customizations due to climate factors and the nature of stationary applications. Selection of a suitable generator-set for demonstration testing was started taking into account the requirements of

the EPA and the target market. Initial communications with the EPA were time consuming and refinement of the test verification plan progressed at a slower rate than expected due to regulatory complexity.

Once the regulatory guidelines were established the bulk of the discussions focused on rules and requirements of the durability process. Typical aging on an in use application was not available so the in-house aging process proposed by Nett was of special concern to the EPA. Many proposals for the engine loading cycle were discussed to mimic as closely as possible the real world conditions for aging to ensure the urea-SCR system would be exposed to as much wear and tear as in any in use application. An eight hour schedule was devised (Table 1), providing an average loading of 47% which would be repeated in excess of 125 times to achieve the 1000 hour aging requirement.

Table 1: Generator Durability Loading Schedule

Duration (min)	Cumulative Time (hours)	Desired Load (%)	Desired Power (kW)	Actual Load (%)	Actual Load (kW)
12	0.20	0	0.0	0	0
72	1.40	25	44.0	25.6	45
48	2.20	45	79.2	45.5	80
84	3.60	65	114.4	65.3	115
48	4.40	80	140.8	79.5	140
84	5.80	65	114.4	65.3	115
48	6.60	45	79.2	45.5	80
72	7.80	25	44.0	25.6	45
12	8.00	0	0.0	0	0

Task 1 was successfully completed. The verification test plan approval was received from EPA on February 20, 2013.

Task 2: Finalization and Build of Prototype SCR Systems

From the Grant Activities (Scope of Work):

> *"2.2. Task Statement: The PERFORMING PARTY will design the SCR system, acquire all necessary components and materials, and fabricate two prototypes.*

2.2.1. The PERFORMING PARTY will customize the SCR system design for engine size and to mount on generator as a direct-fit system.

2.2.2. The PERFORMING PARTY will acquire all necessary components and materials, and will fabricate two prototypes."

For urea-SCR system development and durability testing, a 176 kilowatt (kW) MQ Power Corporation genset powered by a Komatsu engine was used for both development and durability testing.

The genset used for development and durability testing met the following specifications:

- Make- MQ Power Corporation
- Model- DCA220SSK
- Year- 1998
- Power rating- 176 kWe/220 kilovolt-amperes (kVA) – prime 3

The engine used for development and durability testing met the following specifications:

- Make- Komatsu
- Model- S6D125E-2
- Year- 1996
- Engine Family- TKL11.RXDARB
- Cylinders- 6
- Displacement- 11 liters (L)
- Aspiration- Turbo Charge, Air Cooled
- Prime power- 273 horsepower (hp) @ 1800 revolutions per minute (rpm)

Following components were considered for the proposed urea-SCR system:

- DOC to reduce CO, THC and PM emissions, to eliminate the SCR potential masking effects due to high engine PM and HC output, and to increase NO_2 to NO ratio to improve the SCR performance;
- SCR to reduce total NOx;
- Ammonia Slip Catalyst (ASC) to reduce the ammonia slip (if any); and
- Urea Dosing System (UDS) to dose the required amount of urea into the exhaust gas based on the measured mass air flow sensor and upstream NO_x sensor.

Error! Reference source not found. shows the schematic drawing of the proposed urea-SCR system for this project.

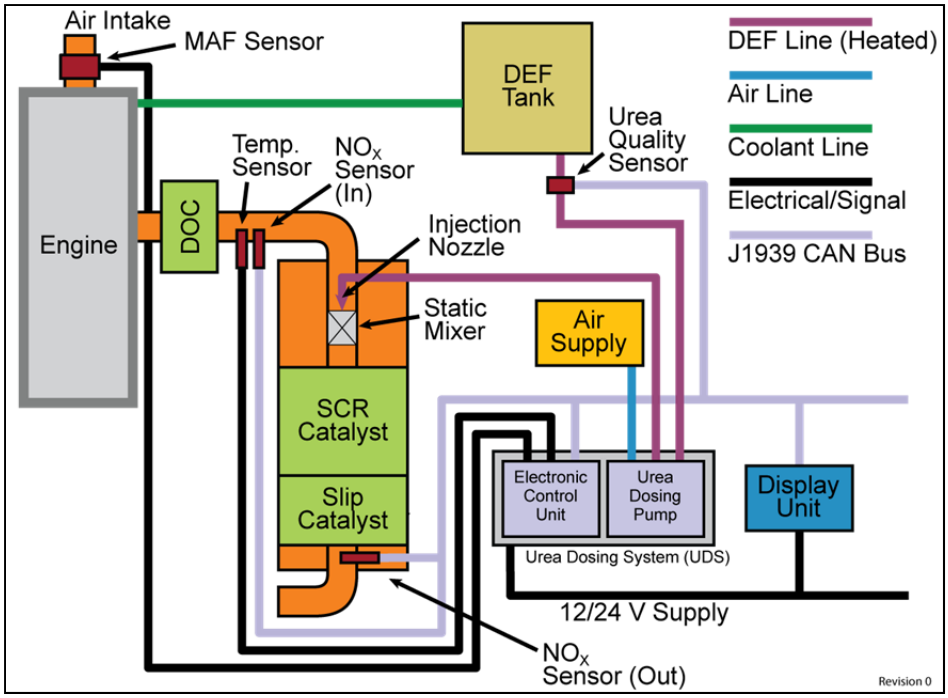

Figure 2. The proposed urea-SCR system schematic drawing

The urea dosing pump used in this project was a standard pump which had been successfully utilized in other applications. In addition, Nett experimented with several DOC and SCR catalysts with different coatings, sizes and configurations to achieve the desired performance for the selected engine size and application. In total, more than nine different DOCs and five different SCRs were designed, built and tested. The following objectives were sought during this testing:

- improving the CO, HC and NO_x emission reduction as claimed;
- improving the flow distribution across the DOC and SCR catalyst;
- minimizing SCR volume to reduce system cost and size; and
- minimizing the induced engine exhaust backpressure to the level recommended by the manufacturer.

Computation fluid dynamics (CFD) was utilized to evaluate exhaust flow behavior in each design and to minimize the number of tests and iterations. Three configurations were selected out of the nine DOC and five SCR samples and are shown in Figures 3, 4 and 5.

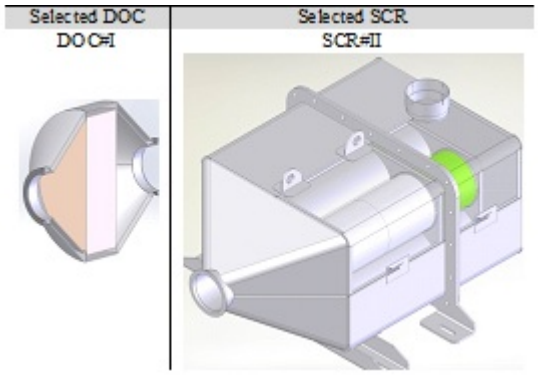

Figure 3. Urea-SCR prototype I selected components

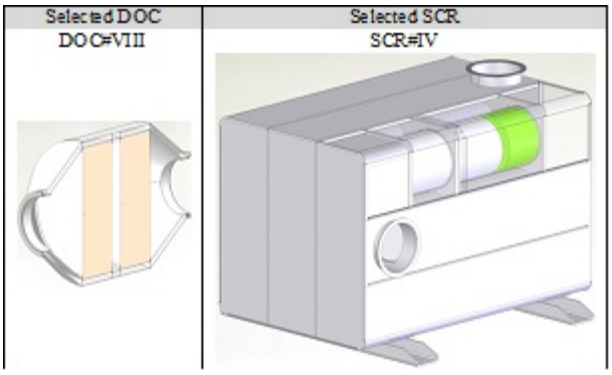

Figure 4. Urea-SCR prototype II selected components

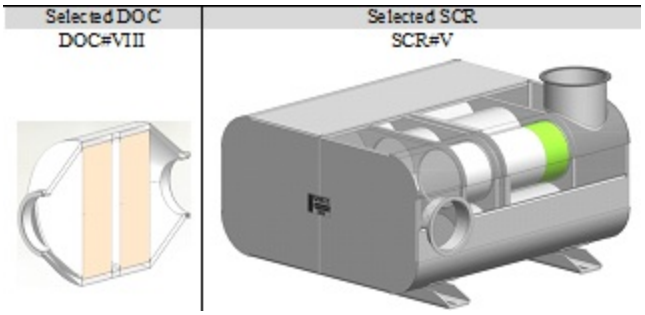

Figure 5. Urea-SCR prototype III selected components

To evaluate the performance of different configurations, 5-mode steady state tests were run on the MQPower generator set using a load bank. The gaseous emissions (CO, HC, NO_x and NH_3) were measured at each mode using Semtech-DS and FTIR (MKS) analyzers. The results from the steady state 5-mode emission tests are given in Tables 2, 3, and 4 for Prototypes I, II, and III respectively.

Table 2. 5-mode steady state emission test results for Prototype I on November 19, 2012

Parameters	Mode 1	Mode 2	Mode 3	Mode 4	Mode 5
Desired Load (%)	100	75	50	25	10
Actual Engine Load (kW)	175	130	85	40	15
Mode Weight Factor	0.05	0.25	0.3	0.3	0.1
Exhaust Temperature (°C)	484	416	344	248	187
Exhaust Backpressure (WC)	65	46	33	25	21
Upstream CO (ppm)	940	690	490	560	580
Downstream CO (ppm)	160	110	120	560	610
Upstream THC (ppm)	313	501	450	638	626
Downstream THC (ppm)	40.8	59.3	46.2	136	161
Upstream NO_x (ppm)	649	486	309	195	124
Downstream NO_x (ppm)	28	27	34	148	113
Downstream NH_3 (ppm)	0.2	0.1	0.1	0.4	0

Table 3. 5-mode steady state emission test results for Prototype II on February 26, 2013

Parameters	Mode 1	Mode 2	Mode 3	Mode 4	Mode 5
Desired Load (%)	100	75	50	25	10
Actual Engine Load (kW)	175	130	85	40	15
Mode Weight Factor	0.05	0.25	0.3	0.3	0.1
Exhaust Temperature (°C)	455	395	339	259	195
Exhaust Backpressure (WC)	49	42	36.	28	22
Upstream CO (ppm)	930	580	460	470	510
Downstream CO (ppm)	1.2	1	1	0.4	400
Upstream THC (ppm)	277	368	408	467	540

Downstream THC (ppm)	26	40	23	23	136
Upstream NO_x (ppm)	723	536	354	201	135
Downstream NO_x (ppm)	94	55	36	31	133
Downstream NH_3 (ppm)	0.1	0	0.05	0.3	0

Table 4. 5-mode steady state emission test results for Prototype III on April 18, 2013

Parameters	Mode 1	Mode 2	Mode 3	Mode 4	Mode 5
Desired Load (%)	100	75	50	25	10
Actual Engine Load (kW)	175	130	85	40	15
Mode Weight Factor	0.05	0.25	0.3	0.3	0.1
Exhaust Temperature (°C)	507	437	377	287	215
Exhaust Backpressure (WC)	33	27	22	17	13
Upstream CO (ppm)	830	700	550	490	500
Downstream CO (ppm)	70	60	70	80	110
Upstream THC (ppm)	264	514	504	562	546
Downstream THC (ppm)	63.8	69.7	54.7	56.4	77.3
Upstream NO_x (ppm)	735	550	348	199	124
Downstream NO_x (ppm)	25	7	5	20	119
Downstream NH_3 (ppm)	0.1	0	0.1	0.3	0

Figure 6 shows the approximated gaseous emission reduction performance of the three urea-SCR prototypes based on the weighted average emissions obtained from the steady state 5-mode tests. Although the CO and HC reduction level in prototype III is slightly lower than that in II, the prototype III successfully satisfied all the claimed emission reduction levels for CO, HC and NO_x and was chosen as the final prototype for aging durability purposes.

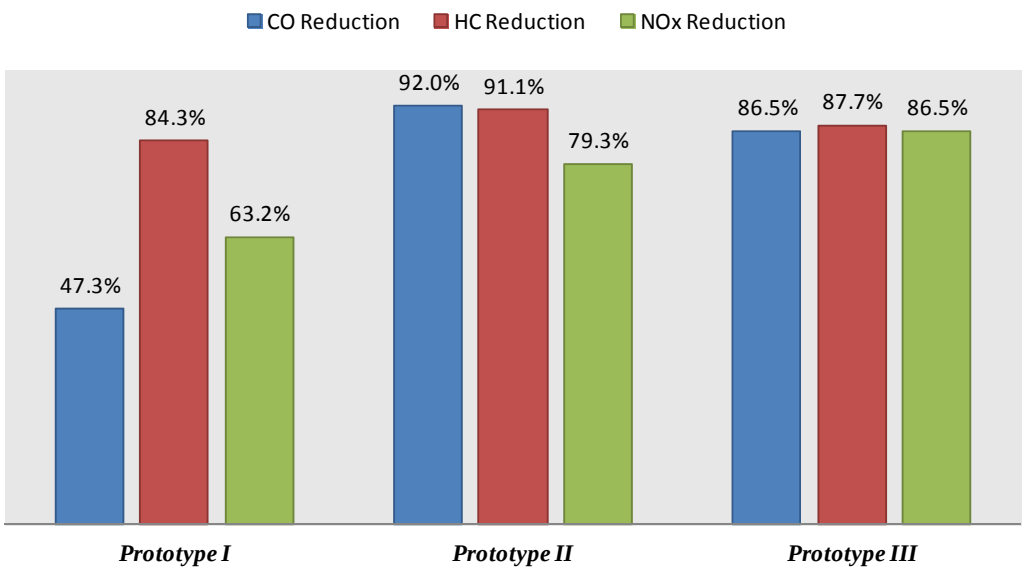

Figure 6. Nett SCR system performance improvement trend

In stationary applications, the engine is more sensitive to exhaust backpressure, therefore the recommended limit for these engines is lower than that in other applications. One of the main challenges of this project was to design a system so that maximum exhaust backpressure remains within to recommended guidelines. Figure 7 shows the maximum induced exhaust backpressure for all three prototypes (fresh catalysts). As shown, the backpressure imposed by the third prototype is almost 50% lower than that of the first prototype and 20% lower than that of the second prototype.

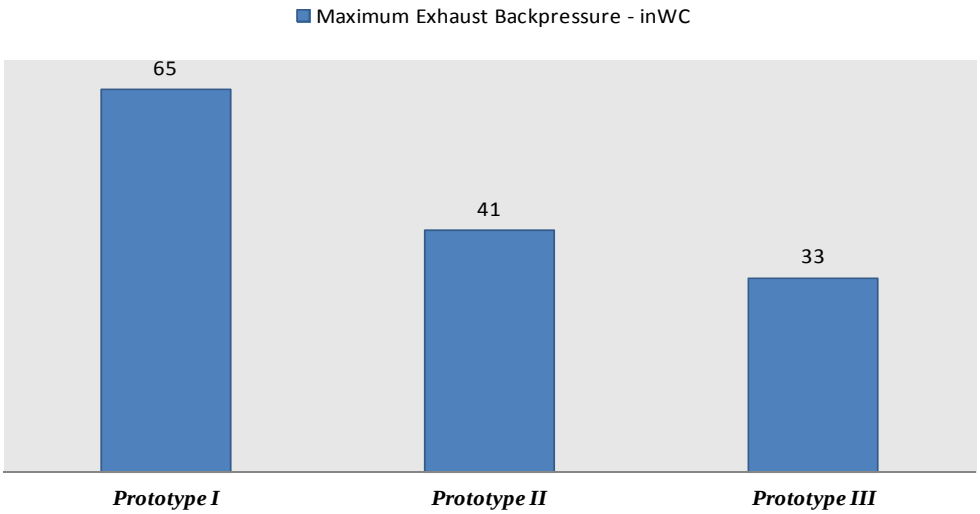

Figure 7: Improvement in exhaust backpressure

Figure 8 shows the catalysts volume used in all the three prototypes. As shown, the SCR catalyst volume in Prototype III is significantly lower than that of Prototypes I and II.

Evaluation the of the three prototypes showed that Prototype III offered the best NO_x reduction, the lowest back pressure increase, the lowest overall catalyst volume and adequate CO and HC reductions. Therefore this prototype was selected as the potential verification unit.

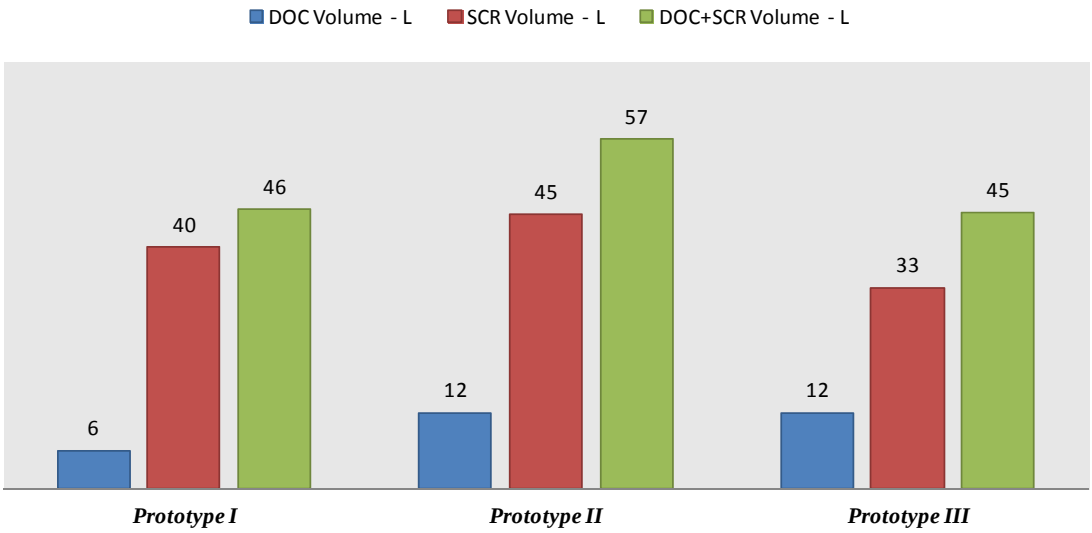

Figure 8: SCR and DOC volumes for three prototypes

From the Grant Activities (Scope of Work):

> *"2.2.3. Schedule: The PERFORMING PARTY shall complete this task within 16 months of the signed Notice to Proceed Date as issued by TCEQ.*
>
> *2.2.4. Deliverables: The PERFORMING PARTY shall submit a report to the TCEQ upon completion of this task. This report will include but is not limited to final prototype designs and documentation, including pictures, of the fabricated prototypes."*

The design for urea-SCR system prototype was finalized and the final prototype was fabricated to mount on the generator as a direct fit system. This is shown in Figure 9.

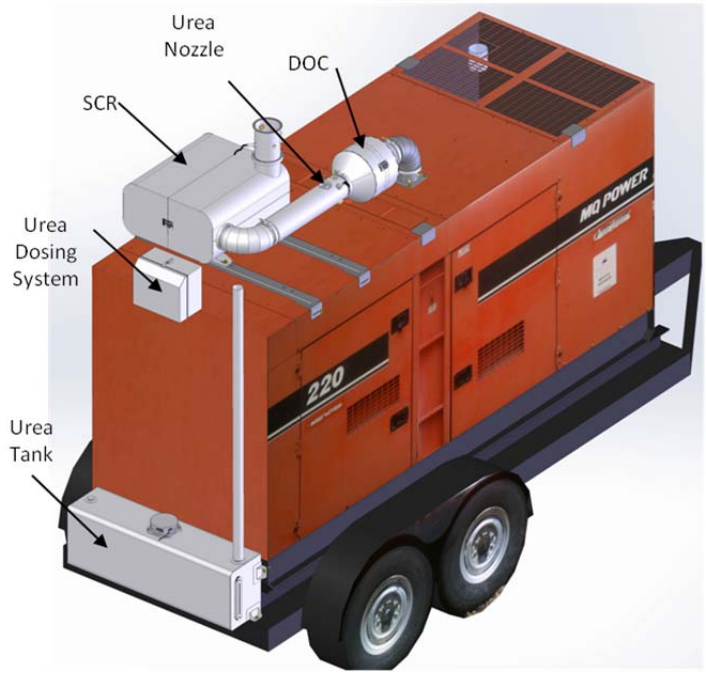

Figure 9: Final urea-SCR system prototype design (Prototype III)

Task 3: Field Durability and Preliminary Emission Reduction Testing

From the Grant Activities (Scope of Work):

> *"2.3. Task Statement: The PERFORMING PARTY will install the two prototypes SCR retrofits on a stationary engine and operate the engines as necessary to accumulate sufficient de-greening and aging hours for the prototypes to be used in verification testing.*
>
> *2.3.1. De-greened prototype*
>
> *2.3.1.1. The PERFORMING PARTY will install one prototype system and an independent data loggers on a generator set powered with a diesel engine below 500 hp. Per the PERFORMING PARTY's test plan, the PERFORMING PARTY will complete steady state testing recording both baseline and treated emissions. The testing will include regulated emissions, temperature, pressure, ammonia slip, fuel economy, and other operational impacts.*
>
> *2.3.1.2. The PERFORMING PARTY will de-green the system for 75 - 125 hours or as required by the EPA approved verification test plan. On completion of the de-greening process, the PERFORMING PARTY will conduct steady state testing and record treated emissions. The testing will include regulated emissions, temperature, pressure, ammonia slip, fuel economy, and other operational impacts.*
>
> *2.3.2. Aged prototype*
>
> *2.3.2.1. The PERFORMING PARTY will install one prototype system and independent data loggers on a generator set powered with a diesel engine below 500 hp. Per the PERFORMING*

PARTY's test plan, the PERFORMING PARTY will complete steady state testing recording both baseline, and treated emissions. The testing will include regulated emissions, temperature, pressure, ammonia slip, fuel economy, and other operational impacts.

2.3.3. The PERFORMING PARTY will prepare and ship the degreened and aged SCR prototype retrofit systems to the EPA approved laboratory for verification testing as per EPA approved verification test plan.

2.3.4. Schedule: The PERFORMING PARTY shall complete this task within 20 months of the signed Notice to Proceed Date as issued by TCEQ.

2.3.5. Deliverables: The PERFORMING PARTY shall submit a report to the TCEQ upon completion of this task. This report will include but is not limited to the test results from the aging and de-greening of the prototype SCR retrofits."

As discussed in Task 2, Prototype III was selected for durability and verification testing. In April of 2013, Nett completed the installation and instrumentation of the final SCR prototype on the 176 kW generator (Figure 10). A data logger was installed recording the required parameters including temperature (upstream and downstream DOC and downstream SCR), back-pressure, NO_x (before and after DOC and after SCR), urea flow, urea level and diagnostics codes. The generator was subject to varying electrical loads using a 200 kW load bank according to the eight hour schedule shown in Table 1. The SCR system was aged for 1000 hours. During system aging, Nett performed the system functionality testing at intervals of 250, 500, and 750 hours according to the procedure defined in EPA verified test plan. Routine engine maintenance was performed throughout the durability period.

Figure 10: Durability setup

To monitor system aging and deterioration rate, two preliminary 5-mode steady state emission reduction tests were performed at 0 hours and 750 hours. The preliminary emission reduction test results are listed in Tables 5 and 6 for the 0 hours and 750 hours testing respectively. Figure 11 shows a comparison between the approximated performance of the system at 0 hour and after 750 hours of aging. Higher

exhaust temperatures due to higher ambient temperatures at 750 hours testing is the main reason for higher performance.

Table 5. Preliminary 5-mode steady state test results for 1000 hours aging prototype at 0 hours

Parameters	Mode 1	Mode 2	Mode 3	Mode 4	Mode 5
Desired Load (%)	100	75	50	25	10
Actual Engine Load (kW)	175	130	85	40	15
Mode Weight Factor	0.05	0.25	0.3	0.3	0.1
Exhaust Temperature (°C)	512	439	379	282	207
Exhaust Backpressure (WC)	29	24	19	14	11
Upstream CO (ppm)	1020	850	570	470	440
Downstream CO (ppm)	90	50	70	60	150
Upstream THC (ppm)	363	439	486	348	506
Downstream THC (ppm)	74	67	55	29	107
Upstream NO_x (ppm)	808	631	412	231	139
Downstream NO_x (ppm)	48	33	14	28	112
Downstream NH_3 (ppm)	0.1	0.2	0.3	0.1	0

Table 6. Preliminary 5-mode steady state test results for 1000 hours aging prototype at 750 hours

Parameters	Mode 1	Mode 2	Mode 3	Mode 4	Mode 5
Desired Load (%)	100	75	50	25	10
Actual Engine Load (kW)	175	130	85	40	15
Mode Weight Factor	0.05	0.25	0.3	0.3	0.1
Exhaust Temperature (°C)	580	480	400	291	230
Exhaust Backpressure (WC)	33	24	18	14	6.
Upstream CO (ppm)	670	970	640	550	570
Downstream CO (ppm)	50	60	70	70	80
Upstream THC (ppm)	133	498	615	593	518
Downstream THC (ppm)	23	57	51.2	49	26
Upstream NO_x (ppm)	719	524	314	182	116
Downstream NO_x (ppm)	23	22	15	11	82
Downstream NH_3 (ppm)	0.2	0.4	0.1	0.3	0.5

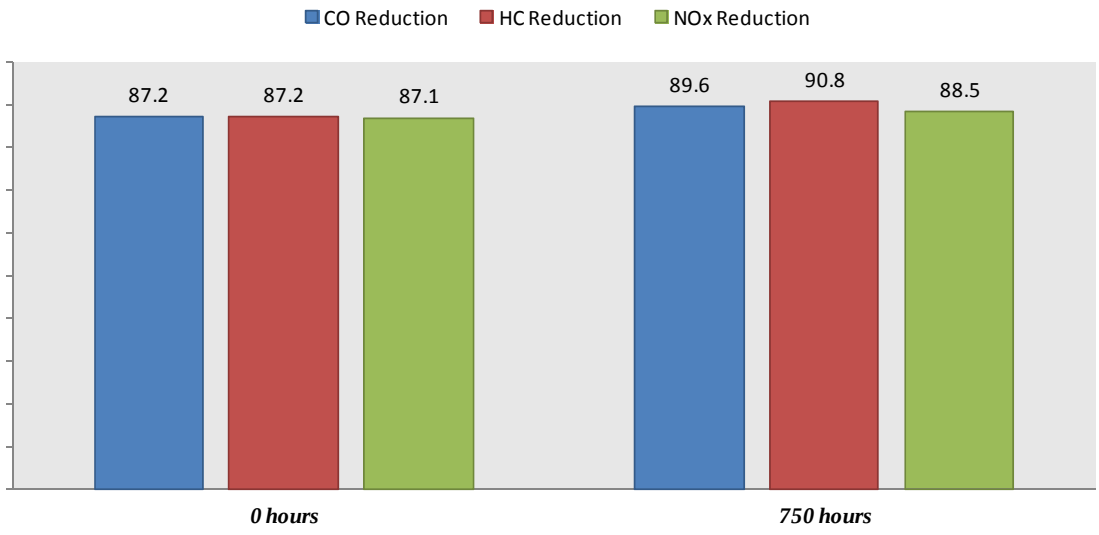

Figure 11: Comparison between system performance at 0 hours and 750 hours

After 1000 hours of durability testing, the aged system was removed and an identical new system was installed on the generator set. The fresh SCR system was de-greened for around 60 hours as per EPA verified test plan (25 -125 hours) under the same operating conditions as that of the aged system. During system de-greening, the generator was subject to varying electrical loads as given in Table 1, then the de-greened system was uninstalled from the genset. Both aged and de-greened systems were shipped to Emissions Research and Measurement Section (ERMS) of Environment Canada (EC), located at 335 River Road in Ottawa, Ontario, Canada, for EPA verification testing.

Task 4: EPA Verification Testing

From the Grant Activities (Scope of Work):

> *"2.4. Task Statement: The PERFORMING PARTY will ensure that the aged and de-greened prototype SCR retrofits are tested according to the EPA approved verification test plan.*
>
> *2.4.1. The PERFORMING PARTY will ensure that the aged and de-greened prototype SCR retrofits are tested at the EPA approved test facility according to the EPA approved verification test plan.*
>
> *2.4.2. The PERFORMING PARTY will ensure that all results of the testing are submitted to the EPA. The PERFORMING PARTY will promptly respond to any additional requests for information or documentation from the EPA or its verification contractors.*
>
> *2.4.3. Schedule: The PERFORMING PARTY shall complete this task within 22 months of the signed Notice to Proceed Date as issued by TCEQ.*
>
> *2.4.4. Deliverables: The PERFORMING PARTY shall submit a report to the TCEQ upon completion of this task. This report will include but is not limited to the verification test report and records of any other verification related communications with EPA."*

Both de-greened and aged units were tested at the ERMS of EC. ERMS is an accredited laboratory for emissions testing of vehicles, engines and equipment, under the Canadian Environmental Protection Act, 1999 (CEPA 1999), which assigned EC full authority for both fuel quality standards and mobile source emission regulations for light-duty and heavy-duty on-road vehicles/engines, motorcycles, small marine engines, and utility engines. CEPA 1999 regulations follow the US CFR, Title 40 Part 89 and Part 1065. Extensive correlations with EPA were performed to verify procedures and methods for heavy duty engine testing. Furthermore, Environment Canada's Heavy Duty Cell is ISO-17025 accredited.

Testing was performed in accordance with the EPA Verified test plan. Under the referenced protocol, the ISO 8178 D2 steady state test cycle should be run for emissions measurement. Emissions of HC, CO, CO_2, NO_x, NO, PM, SOF and ammonia were measured over the three 5-mode steady-state cycles using ULSD fuel for the baseline, aged and de-greened system. NO_2 was reported as the difference between NO_x and NO. BSFC was reported using the carbon balance method. During the runs, backpressure and SCR catalyst inlet and outlet temperatures were recorded on a second-by-second basis.

This testing was performed using a rebuilt 2001 Caterpillar 3406 engine serial number 41Z19318, engine family 1CPXL14.6MRJ (Table 7 for complete details). The engine had been rebuilt using original

Caterpillar parts and it had been broken on a dynamometer for 32 hours. Baseline engine emissions confirmed compliance with original certification values.

Table 7. Specifications of the engine used for SCR system verification testing

Engine Make and Model	Caterpillar 3406
Serial Number	41Z19318
Engine Year	2001
Engine Family	1CPXL14.6MRJ carried over from YCPXL14.6MRJ
Cylinders	6
Displacement (L)	14.6
Fuel System	Mechanical Direct Injection
Aspiration	Turbo Air to Water
Certified Emissions THC (g/bhp-hr)	0.1
Certified Emissions CO (g/bhp-hr)	2.7
Certified Emissions NO_x (g/bhp-hr)	6.6
Certified Emissions PM (g/bhp-hr)	0.3

Between the aged and de-greened systems' emission testing, a full SCR system functionality test was successfully completed by Nett Technologies technician and supervised by EC. The functionality test was performed according to EPA verified test plan. Following sequences have been followed during EPA verification testing at ERMS of Environment Canada.

Table 8. EPA verification test matrix

Step	Task Description	Test Cycle
1	Installation of Caterpillar 3406 engine/dyno/instruments all checked out.	NA
2	Seasoning of fresh lubricating oil.	3 hours 5-mode steady state cycling
3	Repetitive steady-state cycle runs.	2 hours 5-mode steady state cycling

4	Baseline Emission using ULSD Fuel to be compared to original engine certification	ISO 8178 D2 cycle 3 repeats
5	Installation of Nett SCR aged device.	NA
6	Repetitive steady-state cycle runs.	2 hours 5-mode steady state cycling
7	Aged emissions testing using ULSD fuel.	ISO 8178 D2 cycle 3 repeats
8	System functional testing (Performed by Nett Technologies but supervised by Environment Canada-ERMS)	NA
9	Installation of Nett SCR de-greened device.	NA
10	Repetitive steady-state cycle runs.	2 hours 5-mode steady state cycling
11	De-greened emissions testing using ULSD fuel.	ISO 8178 D2 cycle 3 repeats

Tables 9, 10, and 11 show the results of the emission testing performed for engine baseline, aged, and de-greened systems, respectively. ERMS is still working on the final verification testing report. Nett will submit the final report to the TCEQ and the EPA upon receipt.

Table 9. EPA Verification baseline testing emission reduction results by mode and pollutant emission rate (g/bhp-hr)

Testing Round	CO	CO_2	NO_x	NO	HC	FC	PM
5 mode # 1	0.728	601.157	4.858	4.583	0.287	190.996	0.210
5 mode # 2	0.743	597.424	4.868	4.609	0.289	189.824	0.229
5 mode # 3	0.725	597.644	5.141	4.905	0.270	189.866	0.209
Average	**0.732**	**598.742**	**4.956**	**4.699**	**0.282**	**190.229**	**0.216**

Table 10. EPA Verification aged testing emission reduction results by mode and pollutant emission rate (g/bhp-hr)

Testing Round	CO	CO_2	NO_x	NO	HC	FC	PM
5 mode # 1	0.025	600.304	0.467	0.327	0.000	190.090	0.147
5 mode # 2	0.027	600.318	0.464	0.328	0.000	190.095	0.149
5 mode # 3	0.015	599.067	0.453	0.312	0.001	189.693	0.140
Average	**0.022**	**599.896**	**0.461**	**0.322**	**0.000**	**189.959**	**0.146**

Table 11. EPA Verification degreened testing emission reduction results by mode and pollutant emission rate (g/bhp-hr)

Testing Round	CO	CO_2	NO_x	NO	HC	FC	PM
5 mode # 1	0.025	597.897	0.482	0.327	0.002	189.329	0.134
5 mode # 2	0.027	605.770	0.463	0.307	0.002	191.823	0.135
5 mode # 3	0.029	600.275	0.454	0.302	0.001	190.083	0.148
Average	**0.027**	**601.314**	**0.466**	**0.312**	**0.002**	**190.412**	**0.139**

The emission reduction performances of both aged and de-greened systems are compared in Figure 12. As shown, there is a negligible performance difference between the aged and de-greened systems which proves high system durability. Based on the calculated emission reduction (Figure 12), the Nett SCR system can reduce CO, NO_x, HC and PM by 96%, 91%, 99%, and 32% respectively. These values are much higher than the targeted levels in the initial proposal.

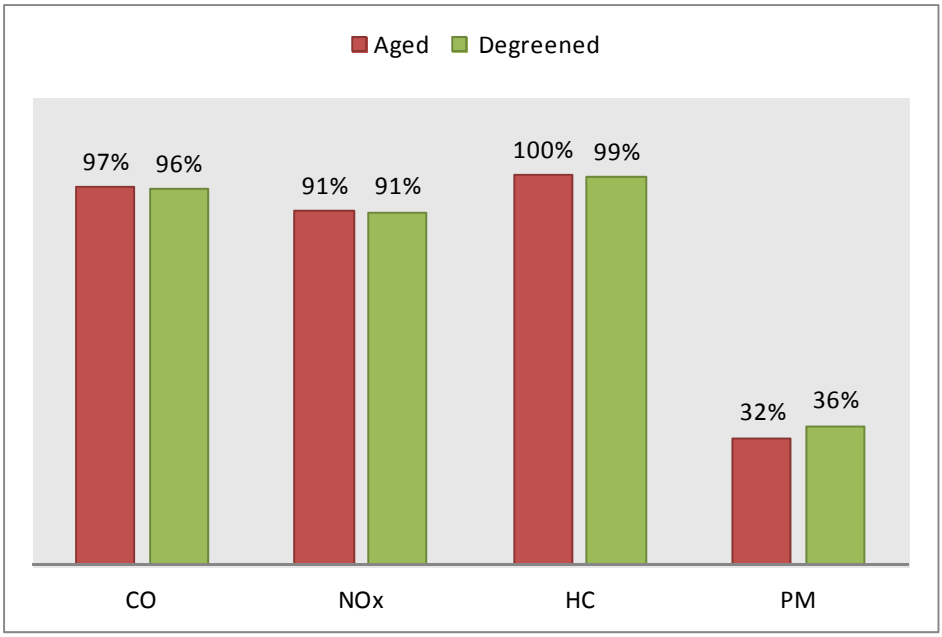

Figure 12: Emission reduction results for aged and de-greened prototypes

Task 5: Reporting

From the Grant Activities (Scope of Work):

> *"2.5.1. The PERFORMING PARTY will coordinate all project resources to ensure compliance with NTRD program requirements while providing deliverables on-schedule and on-budget.*
>
> *2.5.2. The PERFORMING PARTY will generate monthly progress reports and a final report summarizing all aspects of the project based on data from the task completion reports.*
>
> *2.5.3. Schedule: The PERFORMING PARTY shall submit monthly reports to the TCEQ by no later than 10 days after the end of each month. The PERFORMING PARTY shall submit the final report to complete this task within 23 months of the signed Notice to Proceed Date as issued by TCEQ.*
>
> *2.5.4. Deliverables: The PERFORMING PARTY shall submit monthly progress reports with associated billing statements and a final project summary report to the TCEQ upon completion of this task. Once approved by EPA, the PERFORMING PARTY must also submit a copy of the final verification to the TCEQ."*

During this project a new high efficient emissions reducing technology with the objective for commercialization in the state of Texas has been developed. The main objective of this project was to verify the developed system with EPA. The project was in full compliance with the requirements of NRTD program. Since June 2011, Nett has generated and submitted monthly progress reports to TCEQ and now is submitting the final report as all the stages of the project have been completed and is in the

process of obtaining final EPA verification approval. Once approved, Nett will submit a copy of the final verification document to TCEQ.

Discussion/Observations

Objectives vs. Results

The first objective of this project was to obtain EPA approval of a verification test plan within 13 months of notice to proceed (NTP). This was only achieved within 21 months. The other objectives of this project were to develop, test and verify a SCR system for stationary application with 60-90% NO_x reduction and over 25% PM reduction. Nett has successfully completed the system development and verification testing. The results show over 90% NO_x reduction and above 30% PM reduction which exceeds the project expectations.

Critical issues

Completion of Task 1 took longer than the time originally planned for this project. Nett's underestimates of regulatory complexity caused this delay.

Developing a compact urea-SCR system with excellent emission reduction performance and low exhaust flow restriction that meets the engine manufacturer's guidelines was a challenging project demanding a great amount of research and development activities. Achieving a design and configuration maintaining the desired emission reduction level in applications with relatively high engine PM output was a complex problem with a non-trivial solution.

Technical and commercial viability of the proposed approach

During this project, all the technical barriers have been successfully identified and all the objectives were technically satisfied. The developed SCR technology can effectively reduce NO_x, CO, HC and PM emissions of stationary diesel applications by more than 91%, 96%, 99% and 30% respectively.

Stationary diesel applications (generator and non-generator) in the US are estimated at 900,000 units with approximately 49% of those in the targeted engine power range of 149 – 1000 hp. At this time, no other systems have been verified by the EPA for NO_x control of diesel-powered stationary sources. The verification will cover a broad range of applications from stand-by to prime generators, mobile and stationary, pumps and compressor. Modular design of the system allows for mass production meeting any market demand.

Scope for future work

Future work includes:

- receiving the final verification testing report from Environment Canada-ERMS and submitting the report to the TCEQ and to EPA;
- receiving the final EPA verification approval for the developed urea-SCR system;
- submitting a copy of final verification to TCEQ; and
- system commercialization.

Intellectual Properties/Publications/Presentations

None

Summary/Conclusions

The main objectives of this project was to develop, test and verify a urea-SCR system with a NO_x reduction of 60% to 90% and PM reduction of minimum 25% for stationary diesel engine applications.

Achieving the project goals required following accomplishments:

- receiving the verification test plan approval from EPA;
- technology development and design optimization;
- extensive in-house testing for technology validation;
- 1000 hours durability testing;
- system emission testing in EPA approved engine laboratory; and
- complete reporting

Nett has successfully completed all the project steps and expects the final verification approval to be granted by the end of the third quarter in 2013. The verified system will be commercially available for the US market.

Contact info

For further information about this project please contact:

Wayne Moffat
Nett Technologies Inc.
Phone: 905.672.5453
Email: wmoffat@nettinc.com