High-Power Electric Terminal Tractor (HPETT)

Task #2: Vehicle Integration Report

for:

New Technology Research and Development Program

582-11-13472-2019

Submitted by:

Transportation Power, Inc.

Principal Investigator:
Michael Simon

November 11, 2012

The preparation of this report is based on work funded in part

by the State of Texas

through a Grant from the Texas Commission on Environmental Quality

Table of Contents

ABSTRACT/EXECUTIVE SUMMARY **5**

INTRODUCTION/BACKGROUND **7**

PROJECT OBJECTIVES/TECHNICAL APPROACH **7**

HPETT DEMONSTRATION PROJECT OBJECTIVES 8
HPETT COMMERCIALIZATION OBJECTIVES 8
TECHNICAL APPROACH 8

TASK 2: VEHICLE INTEGRATION **9**

TASK OVERVIEW 9
SUBTASK #1: COMPONENT PROCUREMENT 10
Motive Drive Subsystem *10*
Energy Storage Subsystem *12*
Power Control and Distribution Subsystem *14*
Electrically-Driven Accessory Subsystem *14*
SUBTASK #2: TRACTOR PROCUREMENT 15
SUBTASK #3: FIRST VEHICLE INTEGRATION 16
Motive Drive Subsystem *17*
Energy Storage Subsystem *18*
Power Control and Distribution Subsystem *20*
Electrically-Driven Accessory Subsystem *21*
SUBTASK #4: COMPONENT-LEVEL TESTING – TRACTOR #1 21
SUBTASK #5: UPDATED ITP 23
SUBTASK #6: UPDATED ELECTRIC DRIVE SYSTEM/COMPONENTS 24
SUBTASK #7: UPDATED INSTALLATION DRAWINGS AND PROCEDURES 27
SUBTASK #8: SECOND TRACTOR INTEGRATION 27
SUBTASK #9: COMPONENT-LEVEL TESTING – VEHICLE #2 28
REPORTING 28

DISCUSSION/OBSERVATIONS **31**

OBJECTIVES VS. RESULTS 31
CRITICAL ISSUES 31
TECHNICAL AND COMMERCIAL VIABILITY OF THE PROPOSED APPROACH 33
SCOPE FOR FUTURE WORK 33

INTELLECTUAL PROPERTIES/PUBLICATIONS/PRESENTATIONS **33**

SUMMARY/CONCLUSIONS **34**

CONTACT INFORMATION **34**

APPENDICES **35**

APPENDIX A: UPDATED INTEGRATION TEST PLAN (ITP) 36
Overview *36*
Component-Level Testing *36*
Subassembly-Level Testing Steps *36*
Subsystem Testing Steps *38*
Vehicle System Testing Steps *40*
APPENDIX B: UPDATED MATERIALS AND COMPONENTS LIST 43

Yard Tractor Electric Drive System.....43
Propulsion and Power Transmission Subsystem Installation Procedures.....47
Energy Storage Subsystem Installation Procedures.....48
Control Subsystem Installation Procedures.....51
Cooling Subsystem Installation Procedures.....51
Electrical Accessories Subsystem Installation Procedures.....52
Electrical Distribution Subsystem Installation Procedures.....54

Table of Figures

Figure 1: Motor attached to AMT, mounted in Tractor #1. 10

Figure 2: Interior of first prototype ICU. 12

Figure 3: Fully-assembled Mile-Max™ battery module. 13

Figure 4: Under-cab mounting structure for ESS modules. 13

Figure 5: PCDC for Tractor #1. 14

Figure 6: Components of electrically-driven compressed air system. 15

Figure 7: Two terminal tractors purchased by TransPower for conversion to electric drive. 16

Figure 8: ICU, shown underneath Central Control Module, during integration of Tractor #1. 17

Figure 9: Main components of Motive Drive System in Tractor #1. 18

Figure 10: Battery module mounting structure. 19

Figure 11: Completed battery modules on Tractor #1. 20

Figure 12. Dynamometer testing and calibration of ICU motor control functions. 22

Figure 13. Dynamometer test setup used to validate transmission and integrated driveline 23

Figure 15. Two Quantum inverters installed into Navistar electric truck. 25

Figure 16. Original Energy Storage Subsystem Design. 26

Figure 17. Updated integration drawing #1. 29

Figure 18. Updated integration drawing #2. 29

Figure 19. Fully integrated Tractor #1 pulling a loaded trailer during a test run on September 4, 2012. 30

Figure 20. Main power assembly of Tractor #2 shortly after integration. 30

Figure 21: Diagram of the terminal tractor space claim: Top view 46

Figure 23: Motor and transmission attached to mounting adapter 47

Figure 24: Mile-Max enclosure tack welded together 48

Figure 25: Cell polarity layout within each suitcase 50

Figure 26: Bus bar connections for each suitcase 50

Figure 27: Under-cab suitcase installation order 51

Abstract/Executive Summary

This report highlights the results of *Task 2, Vehicle Integration,* which is the second task assigned under the High-Power Electric Terminal Tractor (HPETT) project, being conducted by Transportation Power, Inc. ("TransPower") under a grant from the Texas Commission on Environmental Quality (TCEQ). By far the most intricate and extensive of the five assigned project tasks, the Vehicle Integration task involved nine major subtasks:

1. Procure all components required for electric operation of the terminal tractors, including: drive motors, inverters, chargers, lithium batteries and/or integrated lithium battery packs, and electrically-driven accessory components.

2. Procure two conventional diesel terminal tractor vehicles.

3. Integrate the complete electric drive system into the first demonstration tractor, Tractor #1.

4. Perform component-level testing as installation proceeds.

5. Update the Integrated Test Plan (ITP) to describe drive testing to be performed following the first truck integration and prior to its delivery to for in-service test and evaluation.

6. Update the electric drive system required components for the second tractor, if necessary, to reflect any changes in components or parts deemed necessary during initial road testing of Tractor #1.

7. Update installation drawings and procedures as necessary to reflect new components/parts and lessons learned during integration and testing of Tractor #1.

8. Integrate the complete electric drive system into the second demonstration tractor, Tractor #2.

9. Perform component-level testing as installation proceeds.

Task 2 took longer to complete than expected, primarily because the TransPower team took on numerous additional research and development tasks that weren't part of the original proposal. Substantial upgrades were made to all four major subsystems comprising the TransPower electric drive system, as compared with the design concepts envisioned at the start of the project in June 2011. Three of the drive system upgrades relate to major components and are particularly significant:

- TransPower elected to develop a new three-speed "Automated Manual Transmission" (AMT) with significantly superior capabilities to the two-speed manual transmission originally included in the tractor drive system design.

- TransPower elected to utilize its revolutionary new Inverter-Charger Unit (ICU) for motor control as well as battery charging, as opposed to its original plan of using a commercial off-the-shelf inverter for motor control.

- TransPower developed a new "Mile-Max™" battery module concept after testing its first generation battery enclosures on a Navistar on-road electric truck funded under a separate

program. The Mile-Max™ module is expected to be significantly more robust and easier to manufacture than the original battery module design.

To safely implement the first two of these three upgrades, TransPower designed and built two dynamometers and then, in collaboration with its inverter supplier EPC, conducted two full months of dynamometer testing to validate the functionality of the new automated transmission and ICU before installing them on Tractor #1.

TransPower believes that the additional time invested in completing the two tractors was a wise choice, when consideration is given to all of the long-term benefits that are expected to result from the upgrades summarized above, along with a myriad of other improvements TransPower has made to the drive system design in the course of building the two tractors under Task #2. These upgrades are expected to improve vehicle efficiency, operating range, performance, reliability, maintainability, and cost-effectiveness, resulting in end products far superior to the drive system and electric tractor concepts originally proposed to the TCEQ. There will still be ample time under the term of the Grant Agreement for thorough operational testing of both vehicles; in fact Tractor #1 has already undergone more than two months of alternating periods of drive testing and component upgrades, and is preparing to undergo a week of independent testing by Southern California Edison as this report is being submitted.

Therefore, in summary, TransPower believes the overall HPETT Project is proceeding as well as, if not better than planned, and that the project is on track to become a huge success and a prime example of the excellent results that can be achieved when the public and private sector partner to develop and demonstrate new technologies. This report supports this assessment with a wealth of information on the drive system developed for these amazing new tractors, including photos and extensive test results. TransPower remains on a pace to complete the remainder of project tasks on schedule, and looks forward to receiving a tremendous market response to the new electric tractors as they demonstrate their unique capabilities and the many environmental and economic benefits of the high-performance electric drive system developed for these vehicles under the NTRD grant program.

Introduction/Background

While large automakers focus on developing electric propulsion technology in smaller vehicles, TransPower's technology is focused on the unique problems created by heavy-duty vehicles, including Class 8 trucks and large terminal tractors. These are among the least fuel-efficient, most polluting vehicles in use today. These problems are particularly acute in the case of locally-driven Class 8 trucks and terminal tractors, also known as "yard tractors", that spend large amounts of time idling and operating a low speeds in heavily-populated areas, such as port drayage and warehouse/distribution facility operations. When equipped with TransPower's electric drive systems, customized for each individual truck/tractor model, these trucks become zero-emission vehicles, operating cleanly and economically on electric power alone. The electric drive motors used to propel these vehicles obtain all their energy from onboard batteries. Such vehicles are simpler and more reliable than conventional internal combustion engine or hybrid vehicles.

TransPower's product offering is innovative because it's one of the first pure battery-electric drive systems targeted at the largest trucks and tractors. Most companies developing electric-based solutions for Class 7 and 8 trucks have focused on hybrid-electric drive systems, where electric motors drive the vehicle but onboard batteries supply only a small fraction of the energy used by the vehicle each day. TransPower's innovative approach is to move beyond hybrids to take advantage of recent advances in lithium battery technology, which make it possible for the first time to achieve sufficient operating range with a pure battery solution. Also, by eliminating the engine, transmission, and fuel system, the battery-electric system gets rid of several of the highest maintenance items on a typical conventional or hybrid truck.

The second, most important unique feature of the battery-electric system is that it eliminates fuel use entirely. Whereas hybrids typically reduce fuel use by only 10 to 20% and natural gas trucks actually use more fuel than diesel trucks, electric systems will require no refueling, thereby saving a typical truck operator tens of thousands of dollars each year, even after accounting for the cost of electricity to recharge the system's batteries. TransPower estimates that if 80 terminal tractors using 40 gallons of fuel per day were converted to electric drive it could save as much as $4 million per year in fuel costs (based on a diesel fuel price of $3.50 per gallon).

Project Objectives/Technical Approach

The High-Performance Electric Terminal Tractor (HPETT) project is a partnership between TransPower, H-E-B, and Cargotec with two overarching objectives: to demonstrate a superior electric drive technology for terminal tractors and to use this demonstration project as a springboard for rapid commercialization of TransPower's modular electric drive system. TransPower, an early-stage electric vehicle technology company based in California, has purchased two Kalmar Ottawa tractors and recently completed retrofitting them with new battery-electric drive systems. H-E-B, a Texas-based, privately-owned retail company, will operate the two electric tractors at its main distribution facility in San Antonio, beginning in October 2012. Key technical, economic, and business objectives are summarized below.

HPETT Demonstration Project Objectives

- Technical: Demonstrate a robust, reliable electric drive system combining proven components with several key new technologies and products.
- Technical: Demonstrate sufficient operating range for terminal tractors using lithium battery energy storage.
- Economic: Demonstrate that electric tractors are more cost-effective to operate than diesel tractors.
- Business: Strengthen TransPower prototype and demonstration vehicle development capabilities.

HPETT Commercialization Objectives

- Technical: Develop a dependable supply chain for delivery of electric truck and tractor components cost-effectively and on a large scale.
- Technical: Develop facilities and methods for rapid and economical integration of electric drive components into "kits" that can be sold to Cargotec and other major tractor manufacturers.
- Economic: Create sufficient demand for vehicle batteries to drive production cost down and make energy storage systems more affordable.
- Business: Market electric drive systems successfully for short-haul truck and tractor applications, starting with terminal tractors and progressing to other markets such as refuse collection.

Technical Approach

TransPower's technical approach was designed to accomplish the objectives summarized above, while minimizing the risks and costs associated with product development. We are able to do so by modeling the yard tractor and duty cycle requirements before procuring components and beginning the vehicle integration process. In March 2012 we reported on the completion of our first task, *Task 1: Drive System Design*, discussing the selection of components, integration drawings that indicate where the components will be placed on the vehicles, and providing an initial set of procedures for the integration and testing of the vehicles. This report summarizes work performed through the date of this report on our second task, *Task 2: Vehicle Integration.*

Task 2 took longer to complete than expected, primarily because the TransPower team took on numerous additional research and development tasks that weren't part of the original proposal. Substantial upgrades were made to all four major subsystems comprising the TransPower electric drive system, as compared with the design concepts envisioned at the start of the project in June 2011. Three of the drive system upgrades relate to major components and are particularly significant:

- TransPower elected to develop a new three-speed "AMT" with significantly superior capabilities to the two-speed manual transmission originally included in the tractor drive system design.

- TransPower elected to utilize its revolutionary new ICU for motor control as well as battery charging, as opposed to its original plan of using a commercial off-the-shelf inverter for motor control.

- TransPower developed a new "Mile-Max™" battery module concept after testing its first generation battery enclosures on a Navistar on-road electric truck funded under a separate program. The Mile-Max™ module is expected to be significantly more robust and easier to manufacture than the original battery module design.

To safely implement the first two of these three upgrades, TransPower designed and built two dynamometers and then, in collaboration with its inverter supplier EPC, conducted two full months of dynamometer testing to validate the functionality of the new automated transmission and ICU before installing them on Tractor #1.

TransPower believes that the additional time invested in completing the two tractors was a wise choice, when consideration is given to all of the long-term benefits that are expected to result from the upgrades summarized above, along with a myriad of other improvements TransPower has made to the drive system design in the course of building the two tractors under Task #2. These upgrades are expected to improve vehicle efficiency, operating range, performance, reliability, maintainability, and cost-effectiveness, resulting in end products far superior to the drive system and electric tractor concepts originally proposed to the TCEQ. There will still be ample time under the term of the Grant Agreement for thorough operational testing of both vehicles; in fact Tractor #1 has already undergone more than two months of alternating periods of drive testing and component upgrades, and is preparing to undergo a week of independent testing by Southern California Edison as this report is being submitted.

Task 2: Vehicle Integration

Task Overview

By far the most intricate and extensive of the five assigned project tasks, the Vehicle Integration task involved nine major subtasks:

1. Procure all components required for electric operation of the terminal tractors, including: drive motors, inverters, chargers, lithium batteries and/or integrated lithium battery packs, and electrically-driven accessory components.

2. Procure two conventional diesel terminal tractor vehicles.

3. Integrate the complete electric drive system into the first demonstration tractor, Tractor #1.

4. Perform component-level testing as installation proceeds.

5. Update the ITP to describe drive testing to be performed following the first truck integration and prior to its delivery to for in-service test and evaluation.

6. Update the electric drive system required components for the second tractor, if necessary, to reflect any changes in components or parts deemed necessary during initial road testing of Tractor #1.

7. Update installation drawings and procedures as necessary to reflect new components/parts and lessons learned during integration and testing of Tractor #1.

8. Integrate the complete electric drive system into the second demonstration tractor, Tractor #2.

9. Perform component-level testing as installation proceeds.

Following is a discussion of the work completed to date on the nine major subtasks of *Task 2: Vehicle Integration.*

Subtask #1: Component Procurement

From the Grant Activities (Scope of Work):

> *"2.2. The PERFORMING PARTY will procure two conventional terminal tractors as well as all electric drive system components and install the drive systems on [into] the two conventional terminal tractors."*
>
> *2.2.1. Procure Tractors and Components.*
>
> *2.2.1.1. The PERFORMING PARTY will procure all components required for electric operation of the terminal tractors, including: drive motors, inverters, chargers, lithium batteries and/or integrated lithium battery packs, and electrically-driven accessory components."*

TransPower has completed procurement of all components required for electric operation of the two tractors being built under this project. All of the components procured for Tractor #1 and Tractor #2 have been installed into these tractors, and have been validated through initial testing of Tractor #1, which was completed in late August 2012 and began road testing on September 1, 2012.

The components of the TransPower electric drive system are grouped into four major subsystems: Motive Drive Subsystem, Energy Storage Subsystem, Power Control and Distribution Subsystem, and Electrically-Driven Accessory Subsystem. Following are summary descriptions of these four subsystems and the components contained within each.

Motive Drive Subsystem

The main components of the yard tractor Motive Drive Subsystem are the electric traction motor, AMT, and ICU. Figure 1 shows the motor (to the right of the green mounting plate) and the transmission (to the left of the plate) mounted into the frame rails of Tractor #1.

Figure 1: Motor attached to AMT, mounted in Tractor #1.

The drive motor is a 100 kilowatt (kW) continuous and 150 kW peak AC synchronous interior permanent magnet motor supplied by Quantum Technologies, selected for its low price and compact design. Given the desire to maintain the tractor's original user amenities such as automatic shifting, TransPower's ultimate choice was to automate the shifting of a medium duty manual transmission with an acceptable revolutions per minute (RPM) limit and ample torque capacity. The automated shifting is done without the aid of a conventional clutch, reducing mechanical complexity and packaging space requirements. Instead, the drive motor synchronizes the input and output shafts prior to shifting up or down a gear. Due to the drive motor's rapid speed synching capability, shift durations are a fraction of what they would be with a diesel-coupled automatic transmission.

This is accomplished with a unique AMT, which electronically shift gears while transferring power from the electric motor to the drive axle. This approach enables superb pull-away torque at much higher efficiencies than would otherwise be achieved using a torque converter or conventional automatic transmission, by eliminating torque converter stall loses while utilizing most of the motor's RPM range. The AMT utilizes an industry leading control system design process to tune the closed loop motor control necessary to speed synch quickly for short shift duration. By teaming with a local firm, Mastershift, TransPower has secured a robust and tested shift actuation system with years of development behind it, reducing machine design risk. The clean input/output (I/O) interface permits TransPower's drive system software to command the motor and enable shifting by first reducing torque, shifting to neutral, synchronizing the transmission for the next gear, and making that subsequent shift, completing the process and returning torque authority to the driver.

The ICU is a revolutionary new product TransPower has developed over the past year and a half in partnership with EPC Power Corp., and the two electric tractors built under this project will be the first vehicles placed into regular operation anywhere in the world using this new component. The ICU revolutionizes electric vehicle design by combining the functions of the inverter, which controls the drive motors, and the battery charger, which recharges the vehicle's batteries on a "plug-in" basis.

This innovation, which reduces the overall cost of ownership of plug-in electric and hybrid vehicles, is made possible by several recent technical advances that have enabled TransPower and EPC to shrink the size of the magnetic materials required for high power, grid-compliant devices. These advances include new insulated gate bipolar transistors (IGBTs) that switch at higher frequencies than competing inverters,

producing less electrical switching noise and reducing the materials required to filter this noise. Liquid-cooled heat sinks reduce the cost of cooling and improve reliability by eliminating fans, as well as contributing to the more compact, efficient ICU packaging. Hence two ICUs can easily be integrated into larger trucks and buses, providing a total of up to 300 kW of peak power for the main drive motors and the capability to support battery charging at power levels of up to 140 kW.

The ICU can be recharged from any standard 220 to 240 volt (V) outlet equipped a power cord and the right plug. Once the plug is connected to the receptacle on the vehicle, the ICU automatically regulates the recharging of the vehicle's batteries, and safely terminates the charging process when the batteries are brought up to a full charge. Eliminating the need for a separate off-board battery charger not only reduces the cost of ownership, but simplifies facility requirements and charging logistics. TransPower believes this will accelerate customer acceptance of plug-in electric and hybrid vehicles using the ICU.

Development of the ICU was funded on a parallel project and the first prototype ICU, the interior of which is shown in Figure 2, was built by EPC between mid-2011 and early 2012. As discussed in more detail later in this report, the prototype ICU underwent extensive testing through July 2012 and the first production unit of the ICU was installed into Tractor #1. Following installation of the second ICU production unit into an on-road electric truck built by TransPower under a separate contract, the third production unit of the ICU was installed into Tractor #2 in early November 2012.

Figure 2: Interior of first prototype ICU.

In addition to the major components just described, the Motive Drive Subsystem also includes driveline and mounting hardware, cooling systems, and other integration hardware.

Energy Storage Subsystem

The terminal tractor Energy Storage Subsystem (ESS) is built around the Mile-Max™ module, which represents a significant design improvement over the first TransPower battery pack design. A total of 14 Mile-Max™ modules are installed on each tractor, each containing 16 large format (300 ampere-hour)

lithium ion battery cells. As shown in Figure 3, two mounting plates are installed at the top of each module, each providing the electrical connections and battery management system (BMS) sensing for 8 cells. The 14 modules on each tractor will be electrically connected in two parallel strings of 7 modules, with 112 cells in each string.

Figure 3: Fully-assembled Mile-Max™ battery module.

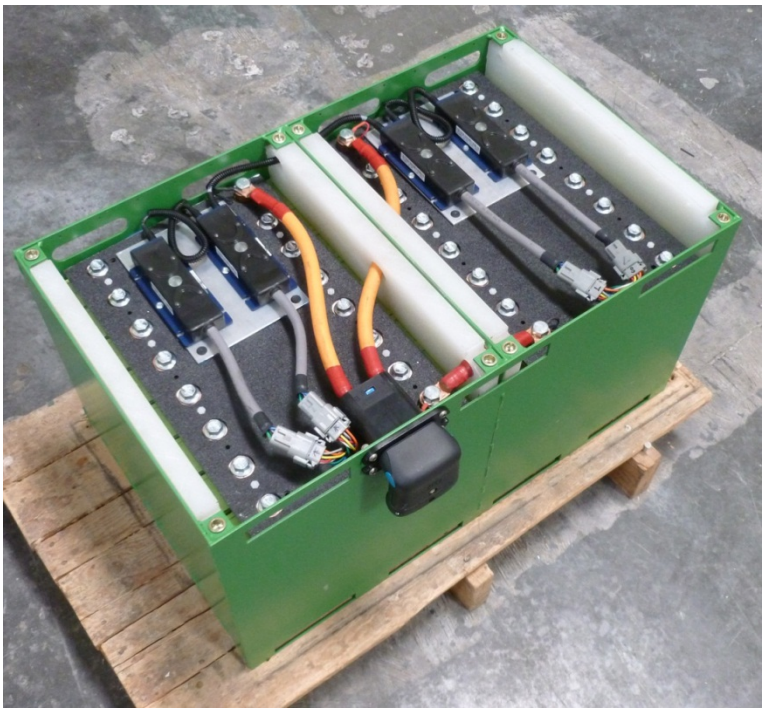

An assembly of 4 modules is mounted on each side of each tractor, and an additional 6 modules are installed underneath the cab. Figure 4 shows the mounting structure designed to house the six Mile-Max™ modules installed under the cab, before this structure was painted and permanently installed into Tractor #1.

Figure 4: Under-cab mounting structure for ESS modules.

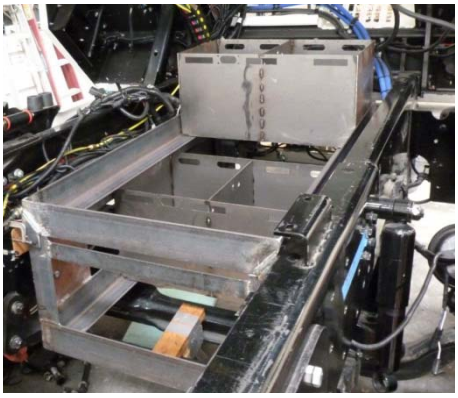

All 448 battery cells required for both tractors have been procured, along with all of the BMS hardware and material required for fabrication of Mile-Max™ modules and support structures. The ESS' for Tractor #1 and Tractor #2 are completely installed and validated.

Power Control and Distribution Subsystem

The terminal tractor Power Control and Distribution Subsystem (PCDS) contains all of the hardware and software necessary to control and route data and power to the various vehicle components. The principal component of the PCDC, shown in Figure 5, is the Central Control Module (CCM) that contains the main drive system controls and serves as the high-voltage distribution center. The two large black boxes seen in the upper right corner of the CCM are the variable frequency drives (VFDs) that control the power steering, braking, air conditioning, and fifth wheel lift systems.

The PCDS also includes the wiring and connections necessary to integrate the vehicle power system and controls with the vehicle's control and monitoring devices, such as the accelerator and brake pedal, shift mechanism, and dashboard displays. The system is designed to make the tractor operator's experience as similar as possible to the experience of operating a conventional tractor. For example, the fuel gauge is used to indicate battery state of charge instead of fuel level.

Figure 5: PCDC for Tractor #1.

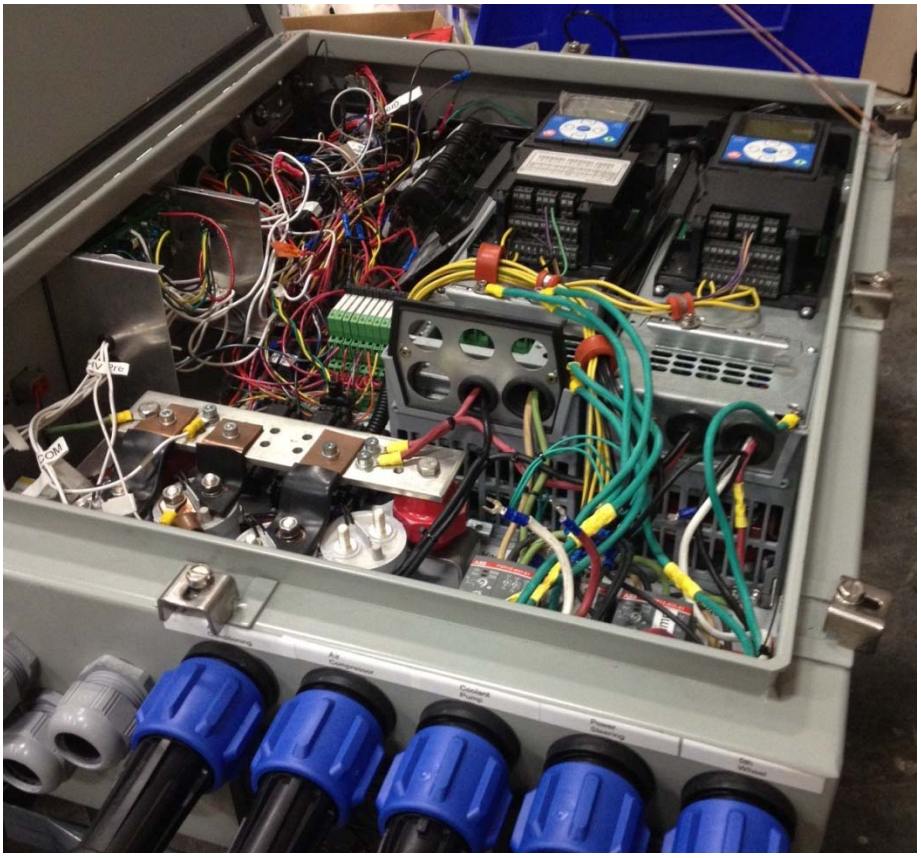

Electrically-Driven Accessory Subsystem

The terminal tractor Electrically-Driven Accessory Subsystem (EDAS) provides electrical power to the vehicle accessories, which include an air compressor for the braking system, air conditioning unit, power steering pump, and a hydraulic pump for the fifth wheel lift. These accessories are traditionally powered directly by the tractor's diesel engine. TransPower procured 5 and 10 horsepower (HP) electric motors to power these accessories electrically. These motors are controlled by VFDs mounted in the CCM, as

described above, which supply power in the appropriate form to run the equipment. The electric accessories do not need to be powered all the time, so the control software is programmed to operate them in a cyclical manner. Figure 6 shows the accessory components used to power the vehicle's compressed air system, which includes an electric motor driving a scroll compressor with a belt drive.

Figure 6: Components of electrically-driven compressed air system.

Subtask #2: Tractor Procurement

From the Grant Activities (Scope of Work):

> *"2.2.1.2. The PERFORMING PARTY will procure two conventional diesel terminal tractor vehicles."*

TransPower purchased two conventional terminal tractors from Cargotec, parent company of Kalmar, manufacturer of the Kalmar Ottawa tractors used for this project. This vehicle model was selected because it was the same tractor model being purchased by H-E-B for its San Antonio distribution center, which is where the electric tractors will be deployed for testing in operational service. Figure 7 shows the

two tractors parked in the prototyping bay of TransPower's Poway, California, research and development facility. The tractor in the rear is partially obscured by boxes and lift equipment.

Figure 7: Two terminal tractors purchased by TransPower for conversion to electric drive.

Subtask #3: First Vehicle Integration

From the Grant Activities (Scope of Work):

> *"2.2.2. Tractor Installation*
>
> *2.2.2.1. The PERFORMING PARTY will integrate the complete electric drive system into the first demonstration tractor."*

Integration of the complete drive system into Tractor #1 was completed in late August 2012. This work was completed significantly later in the project than originally planned, due primarily to the additional time we allocated to developing and testing new, advanced components. The following section, *Subtask #4: Component-Level Testing – Tractor #1*, describes some of the additional component-level testing that delayed vehicle completion. Once this testing was completed, vehicle integration actually proceeded rapidly. At the time of submission of TransPower's July monthly progress report on August 10, 2012, very few components had been permanently installed into Tractor #1. However, three weeks later, on August 31, 2012, all components were installed and the vehicle was undergoing final checkout and

debugging procedures prior to initial run testing. Following is a summary of the first vehicle integration tasks completed, broken down by the four major subsystems.

Motive Drive Subsystem

The electric traction motor and AMT were initially installed into Tractor #1 for a fit check in late May 2012. The assembly was subsequently removed for dynamometer testing, as discussed in more detail in *Subtask #4: Component-Level Testing – Tractor #1*. The motor-transmission assembly was then reinstalled into Tractor #1 in early August 2012. Installation of the ICU module itself was performed in mid-August 2012, after TransPower received the first production ICU from EPC and installed the mounting structure to accommodate the ICU. A view of the ICU mounted on this structure during vehicle integration is shown in Figure 8.

Figure 8: ICU, shown underneath Central Control Module, during integration of Tractor #1.

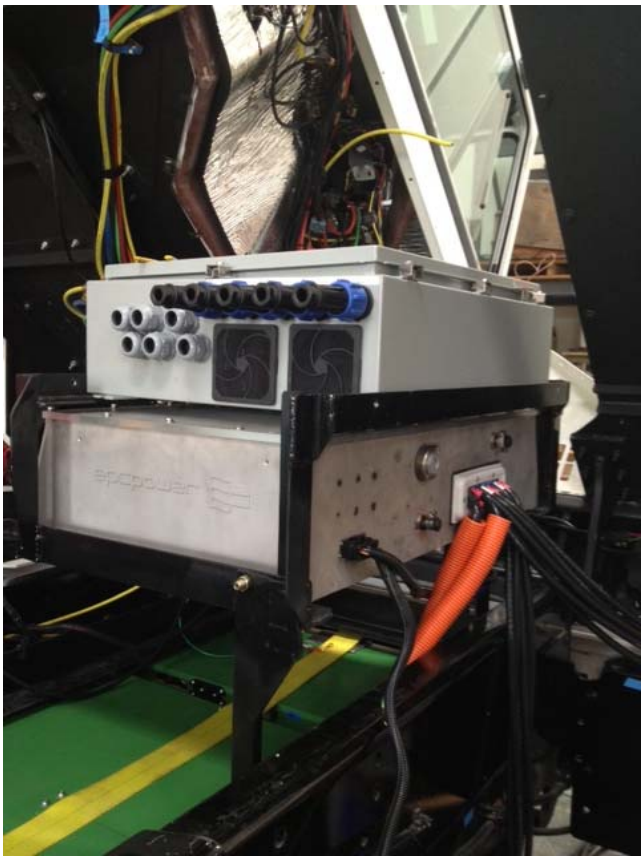

Visible in Figure 8 are three of the Mile-Max™ battery modules mounted beneath the ICU, and the CCM mounted above the ICU. These components, along with three additional Mile-Max™ battery modules, are all mounted on the same integrated structure which sits atop the driveline and extends under the cab.

Figure 9 shows all of the main components of the Motive Drive Subsystem upon completion of Tractor #1 integration in late August 2012. The black box at the very bottom of the photo is the "Mastershift" control box containing the transmission controls, above which the orange transmission is partially visible. The top of the traction motor is visible to the front of the green mounting plate between the motor and

transmission, and the ICU is visible near the front of the vehicle, just in front of the open battery module and below the CCM.

Figure 9: Main components of Motive Drive System in Tractor #1.

Also visible in Figure 9 are a number of the Mile-Max™ battery modules, some of which are mounted along the outsides of the vehicle frame rails and some of which are mounted inside the frame rails, in front of the driveline and under the cab. Some of the electrically-driven accessories and a cooling fluid pump are also visible near the right front tire. The installation of these components is described in more detail below.

Energy Storage Subsystem

As discussed previously, the terminal tractor ESS consists of 14 Mile-Max™ modules, containing a total of 112 large lithium-ion battery cells. Integrating this many batteries within the available space on each

tractor proved to be extremely challenging. Figure 10 shows the mounting structure on one side of Tractor #1, prior to installation of the four modules that are mounted on that side of the vehicle. As indicated, the structure takes up most of the available space between the wheels and offers minimal ground clearance. Visible to the right of the photo are two of the five battery modules mounted under the cab at the time – three modules sit below the two that are visible, and the sixth and final under-cab module was installed a few days after this photo was taken.

Figure 10: Battery module mounting structure.

Figure 11 provides a general idea of how the entire ESS appears once all the battery modules are fully installed and connected. Four modules are visible on the near side of the vehicle and a few of the battery modules under the cab can be seen. The very tops of the battery modules on the far side of the vehicle can barely be seen. As indicated, the side battery modules also make a convenient shelf for tools and water bottles during vehicle integration.

Figure 11: Completed battery modules on Tractor #1.

Figure 11 also shows the vent holes that enable air-cooling of the battery cells inside the modules. Not shown is the water-proof shielding that will be installed before the tractor is placed into service. The water shield will protect the cells from water during wet weather and tractor washing.

Power Control and Distribution Subsystem

Integration of the principal component of the PCDC, the CCM, also turned out to be a major challenge due to vehicle space constraints. The CCM, shown near the top right corner of Figure 11 above, barely fits under the cab. In fact, a major access panel connected to the cab had to be structurally modified to provide additional space for the CCM and the structure supporting it, along with the ICU. Figure 11 also shows several high-voltage cables extending from the side of the CCM. A critical part of the PCDS, this cable network transmits electrical power from the ESS to the CCM, where it is then routed to the ICU and 208 V accessories. Pedal controls and other elements of the PCDS were installed and calibrated during August 2012, enabling initial testing of the completed Tractor #1 to begin in early September 2012.

Electrically-Driven Accessory Subsystem

The EDAS also presented unique integration challenges. The air conditioning motor and compressor assembly was quite large and there weren't many spaces available for its installation after accommodating the MDS, ESS, and PCDS. It was equally challenging finding enough space for routing of all the fluid lines required for power steering and cooling of the vehicle systems. In fact, the front bumper of the tractor was removed and spacers were installed so when the bumper was reinstalled, there was an additional inch of clearance for plumbing. As is often the case, integration of these relatively minor components turned out to be just as challenging and time consuming as installation of the major components.

Subtask #4: Component-Level Testing – Tractor #1

From the Grant Activities (Scope of Work):

> *"2.2.2.2. In accordance with the ITP, the PERFORMING PARTY will perform component-level testing as integration [of Tractor #1] proceeds."*

The ITP submitted with our Task 1 report in March 2012 provides a detailed description of component-level testing that was built into the project plan to validate components as they are integrated into the vehicles. Such testing greatly increases the likelihood that the components will function as expected once the vehicle is completed. As mentioned previously, a significant part of the component-level testing performed on this project was achieved with the assistance of two dynamometers – test devices that were not originally planned but that we decided were worth the extra time and cost to develop and utilize, based on the ability of dynamometer testing to detect problems and enable component operation to be optimized before vehicle integration occurs.

The first stage of dynamometer testing included tests of the ICU's basic ability to control the traction motor used in the terminal tractors. As discussed previously, the original project plan was to use the ICU only to recharge the vehicle's batteries. Even though the long-term intent of the ICU was always to perform motor control as well as battery charging functions, it was uncertain at the start of this project whether the ICU would be ready to perform the more complex motor control functions in time to be used to control the tractor motors. Therefore, our original plan was to use a commercial, off-the-shelf inverter to control the motors, and inverters were procured from Quantum for this purpose. However, over a period of nearly a year, testing of the Quantum inverters during a parallel TransPower program revealed that the Quantum inverters were unreliable and incapable of handling the power levels of large vehicles such as the electric tractors. The repeated failures of the Quantum inverters forced TransPower to accelerate and place a higher priority on development of the ICU's motor control functions. To achieve this, the first prototype ICU and a drive motor were connected to a dynamometer, where the ICU could control the motor under varying load conditions and engineers could adjust the embedded software in the ICU to achieve smooth motor control and maximize motor efficiency. Figure 12 is a photo of this test setup, which was located at EPC's facility, about a mile away from TransPower's facility in Poway, California. ICU testing with this dynamometer was performed throughout June and July 2012. This testing – along with months of previous bench testing of the ICU and its validation as a battery charger – was performed at no cost to the terminal tractor project, using funding from a parallel TransPower electric truck program.

Figure 12. Dynamometer testing and calibration of ICU motor control functions.

The second major phase of component-level testing involved testing of all major components required for basic vehicle locomotion, with the intent of validating basic vehicle controls and the performance of the mechanical driveline. Another major objective of this testing was to optimize the performance of the integrated traction motor and AMT assembly. This phase of testing was achieved with a second dynamometer in a setup depicted in Figure 13. The drive motor and transmission can be seen at the right of this photo, mounted to a stationary frame which allows force to be applied to the driveline with a water brake. The driveline and water brake are to the right of the transmission and not shown in this photo. To the left of the mechanical driveline assembly is a bench setup with the ICU on the bottom and the CCM on top. Power is delivered to the CCM, and in turn to the ICU and test motor, by a test battery pack, also not shown. This setup enabled engineers to simulate performance of most of the main drive system components before their installation into Tractor #1. This testing, performed in early August 2012, validated that the transmission could be shifted and that the driveline could be operated under load without damaging the transmission's gears. Successful completion of this testing greatly increased confidence in the performance capabilities and reliably of the three major new components to be used in the electric tractors: the ICU, AMT, and Mile-Max™ battery module.

Figure 13. Dynamometer test setup used to validate transmission and integrated driveline

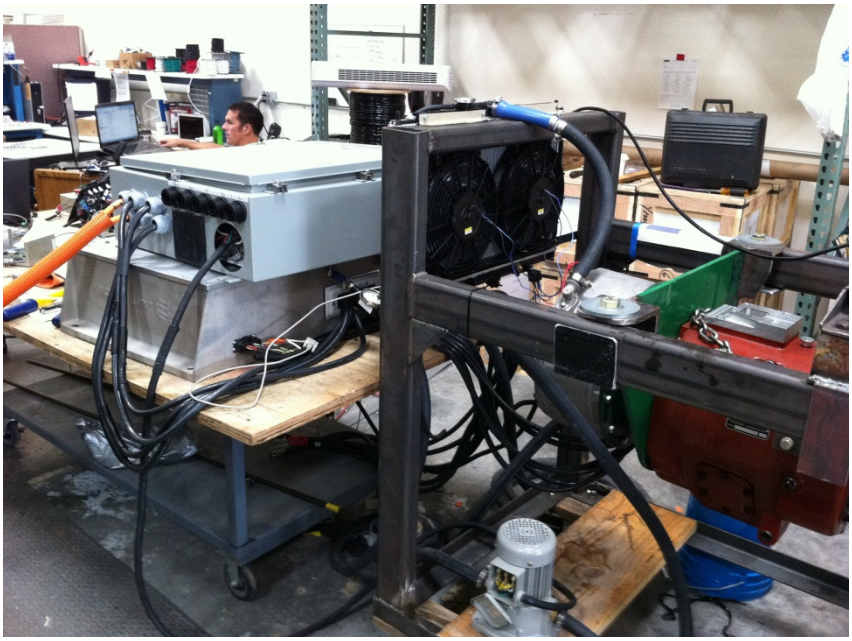

The electrically-driven accessories were also bench tested before being installed into Tractor #1, so all four subsystems were at least partially validated through some component-level testing before vehicle integration. Additional details on component-level testing are provided in Appendix A to this report, *Updated Integration Test Plan.* Completion of this component-level testing increases our confidence that the two tractors will operate with sufficient reliably to meet the objectives of this project.

Subtask #5: Updated ITP

From the Grant Activities (Scope of Work):

> *"2.2.2.3. The PERFORMING PARTY will update the ITP [Integration Test Plan] to describe drive testing to be performed following the first truck integration and prior to its delivery for in-service test and evaluation."*

The ITP has been updated to describe drive testing to be performed with Tractor #1 in September 2012 and Tractor #2 in November and December 2012, prior to delivery of these tractors to H-E-B in San Antonio, Texas, for in-service test and evaluation. One of the key features of this testing is the plan to deliver Tractor #1 to Southern California Edison (SCE) for independent testing at its Pomona, California, facilities. SCE was involved with the testing of two experimental hybrid-electric terminal tractors in 2010-2011, and has developed a test protocol to simulate yard tractor operations. Their application of this protocol to independent testing of Tractor #1 will greatly enhance the results of this project. The updated ITP is included with this report as Appendix A.

While not a requisite part of the tractor test program per se, another interesting new feature of TransPower's pre-delivery demonstration plan was the demonstration of Tractor #1 at the PortTech Expo in San Pedro, California, on September 6, 2012. TransPower's display of Tractor #1 at this event, which annually showcases new technologies designed to improve port operations, represented the first

presentation of this vehicle technology to the port industry – a key target market – and the public at large. The unveiling of Tractor #1 at this event was very well received; in fact the Los Angeles Times published an article on TransPower's participation in the PortTech Expo which featured two full-color photographs of Tractor #1 (see *Los Angeles Times, September 7, 2012, Section B, Page 2).*

Subtask #6: Updated Electric Drive System/Components

From the Grant Activities (Scope of Work):

> *"2.2.3 Tractor 2 Installation*
>
> *2.2.3.1. The PERFORMING PARTY will update the electric drive system required components for the second tractor, if necessary, to reflect any changes in components or parts deemed necessary during initial road testing of Tractor 1 in Task 2.3.1."*

The scope of this subtask was minimized by the availability of a truck from another TransPower project for initial testing. In parallel with the terminal tractor project, TransPower has been developing an electric on-road truck, using a Navistar International chassis, as part of a prototype project supported by the California Energy Commission (CEC) and South Coast Air Quality Management District (AQMD). This "ElecTruck" project began four months before the HPETT project started, and resulted in completion of the first prototype Class 8 truck using a Navistar chassis in October 2011. The HPETT tractors were designed to use many of the same components used in the Navistar electric truck, so road testing of the Navistar prototype between October 2011 and February 2012 provided a significant amount of data and learning experience that enabled TransPower to make numerous improvements to its ElecTruck drive system *before* installing anything into Tractor #1. Figure 14 is a photo of the Navistar electric truck, taken during its initial road testing in November 2011.

Figure 14. Navistar electric truck during test driving in Novermber 2011.

Testing of the Navistar truck identified several areas where TransPower determined that major improvements would be needed to evolve the prototype ElecTruck system into a robust architecture that could be applied to both on-road trucks and off-road vehicles such as the HPETT vehicles. The principal improvement needs identified were:

- Improved transmission: It was determined that the two-speed transmission installed in the Navistar prototype would not provide sufficient torque at low speeds or support high-speed driving with sufficient efficiency to meet long-term requirements. It was therefore decided to develop a new three-speed "AMT," which would be used initially in the two HPETT tractors and then applied to subsequent on-road trucks.

- Improved motor control: The inverters initially selected for the Navistar truck and HPETT tractors were commercially-available inverters supplied by Quantum. It was originally believed that these inverters – shown installed in the Navistar truck in Figure 15 – would provide a safer, more dependable means of controlling the traction motors on these vehicles than relying on TransPower's brand new ICU, which was in its very early stages of development when the initial ElecTruck system design was developed over the Spring and Summer of 2011. However, during testing of the Navistar electric truck, the Quantum inverters failed repeatedly, even after a series of expensive repairs were made to the inverters. After an initial series of Quantum inverter failures over a period of five months, and after seeing the prototype ICU successfully demonstrate its battery charging capabilities in March 2012, we made the decision to shift all our emphasis to perfecting the motor control functions of the ICU and use this device to charge batteries and control the traction motors in both HPETT tractors, as well as all subsequent on-road trucks.

Figure 15. Two Quantum inverters installed into Navistar electric truck.

- Improved ESS design: Following initial road tests of the Navistar electric truck, it was decided that the battery enclosures and mounting arrangement used in this vehicle would be inadequate to assure proper functioning of the ESS during rugged duty cycles. In the original ESS design, the batteries were mounted in shallow trays, which were then slid into place on a rack mounting structure (Figure

16). After viewing initial road tests of the Navistar truck, it was determined that this design allowed excessive movement of the battery cells, which might be jarred loose if a truck hit a large bump or were forced to jerk suddenly for some other reason. It was also determined that an improved method was needed to wire cells together and connect the BMS modules to the ESS. These requirements gave birth to TransPower's new new "Mile-Max™" battery module design, which was first installed on the Navistar truck in place of the original battery configuration, then adapted to the first HPETT vehicle, Tractor #1.

Figure 16. Original Energy Storage Subsystem Design.

In addition to the above improvements, we decided to change many other components of the ElecTruck system, based on experience building and road testing the Navistar electric truck. These included adopting a more robust DC-to-DC converter for the accessory subsystem, modifying the layout of the CCM, and buying certain accessory components separately to save money. It should be emphasized that if the Navistar truck were not built on TransPower's other program, *none of the improvements just described would have been incorporated into the first HPETT vehicle (Tractor #1)*, and we would only be learning about the need to make all these improvements over the next few months, as Tractor #1 and Tractor #2 progress through the test phase of the HPETT project. Since we have already made such a large investment in making these improvements and validating them through dynamometer and other component-level testing (as discussed throughout this report), , it was our expectation that Tractor #1 would significantly exceed initial expectations regarding performance and reliability, and that very few improvements would need to be made before proceeding with Tractor #2. Initial road testing of Tractor #1 over the last two months has largely validated this expectation. This testing did result in identification of several areas in which the design of the tractor required improvement, but all were relatively minor. For example, after completion and initial testing of Tractor #1, the TransPower team recognized that the

wiring of the CCM was very tangled and made it difficult to remove or replace CCM components without inadvertently damaging the wiring. Figure 5 provides some indication of this. For Tractor #2, the CCM was assembled in a much more disciplined process and the wiring is much neater. Initial testing of Tractor #1 also revealed that the weight of the front end of the vehicle exceeded the legal weight limit of the front axle. This was due primarily to the weight of the six battery modules – approximately 2,000 lbs – mounted under the cab. Following discovery of this problem, tractor manufacturer Cargotec was contacted and TransPower ordered two front axles with a heavier weight rating. One of these higher capacity axles was installed into Tractor #2 before most of the other components were installed. The other heavy-duty axle has not yet been installed into Tractor #1 so as not to interrupt its durability testing, but will be integrated into the tractor in place of the existing axle before the tractor is delivered to H-E-B in late November 2012 or early December 2012 .

Subtask #7: Updated Installation Drawings and Procedures

From the Grant Activities (Scope of Work):

> *"2.2.3.2. The PERFORMING PARTY will update installation drawings and procedures as necessary to reflect new components/parts and lessons learned during integration and testing of Tractor 1."*

For the reasons discussed above under Subtask #6, drawings or procedures were not modified significantly between Tractors #1 and #2. Drawings and procedures for manufacturing certain key subsystems and components, such as the transmission/driveline assembly and ESS, were modified after integration and testing of the Navistar truck, but as discussed previously, following these improvements, there was little need for additional modifications to the components installed into HPETT Tractor #1. Wiring diagrams have been updated for the CCM. As discussed above, the wiring in Tractor #1 was somewhat messy, due to the fact that engineers were testing various components as the module was being assembled and weren't able to develop a final integrated wiring plan until the final CCM product was built and validated. However, once the CCM's functionality was verified, a completely new wiring scheme was created with all connections pre-planned and laid out to result in the neatest, most robust, and most serviceable design.

A few unexpected occurrences required some updating of drawing and procedures between integration of Tractor #1 and Tractor #2. When the team initially attempted to install components between the frame rails of Tractor #2, it realized the two rails were one-half inch closer together than in Tractor #1 – a very unexpected variation. Since several components had already been sized to fit within the larger space available between the rails of Tractor #1, some of these components had to be rebuilt to fit within the smaller space available between the rails of Tractor #2.

Subtask #8: Second Tractor Integration

From the Grant Activities (Scope of Work):

> *"2.2.3.3. The PERFORMING PARTY will integrate the complete electric drive system into the second demonstration tractor."*

Integration of Tractor #2 took place significantly later in the HPETT project than originally expected, for two main reasons. First, as discussed previously, the TransPower team elected to develop more advanced componentry for the two tractors than initially planned, making significant improvements to the transmission, inverter, battery storage subsystem, and other critical vehicle elements. Development and testing of these more advanced designs required several months of work that was not accommodated in the original project schedule. Second, as discussed previously, initial testing of Tractor #1 revealed some unexpected issues that had to be resolved before Tractor #2 could be integrated, such as the need to replace the front axle to accommodate the increased weight of the front end. Once integration of Tractor #2 was initiated, additional delays were caused by the discovery that the frame rails in Tractor #2 are one-half inch closer together than the rails in Tractor #1. This required modification of several heavy-duty structural elements used to mount major components such as the drive motor and transmission between the rails.

Integration of Tractor #2 was completed on November 10, 2012. This completed *Task 2, Vehicle Integration,* and enables the team to focus its remaining efforts under the HPETT project on *Task 3, Vehicle Durability Testing* and *Task 4, Vehicle Field Demonstration.*

Subtask #9: Component-Level Testing – Vehicle #2

From the Grant Activities (Scope of Work):

> *"2.2.3.4. In accordance with the ITP, the PERFORMING PARTY will perform component testing as installation proceeds."*

Due to the extensive component-level testing performed during integration of Tractor #1, component-level testing during integration of Tractor #2 was minimized. The ICU installed into Tractor #2 underwent pre-delivery testing by supplier EPC before it was received by TransPower, and some of the electrically-driven accessories were pre-tested prior to vehicle integration, but these were the only major components tested at the component level before being installed into Tractor #2. Durability and field testing of Tractor #2 under the remaining two project tasks will provide adequate data on the functionality of the drive system and all its components.

Reporting

From the Grant Agreement (Scope of Work):

> *"2.2.4. Schedule: The PERFORMING PARTY shall complete this task within 15 months of the signed Notice to Proceed Date as issued by TCEQ.*
>
> *2.2.5. Deliverables: The PERFORMING PARTY shall submit a report to the TCEQ upon completion of this task. This report will include but is not limited to pictures of the integrated tractors, an updated materials and components list, and updated integration drawings and installation procedures."*

This report satisfies the Grant Agreement requirements for Reporting as related to Task 2. Pictures of Tractor #1 are included throughout this report, and Figures 19 and 20 at the end of this report show the integrated Tractor #1 during its first ten run pulling a fully-loaded trailer, and the main power control and

electronics modules (ICU and CCM) installed into Tractor #2 (with battery modules and electrically-driven accessories also partially visible). Appendix B provides an updated materials and components list. Updated integration drawings are in Figures 17 and 18. Updated installation procedures are included with this report as Appendix C.

Figure 17. Updated integration drawing #1.

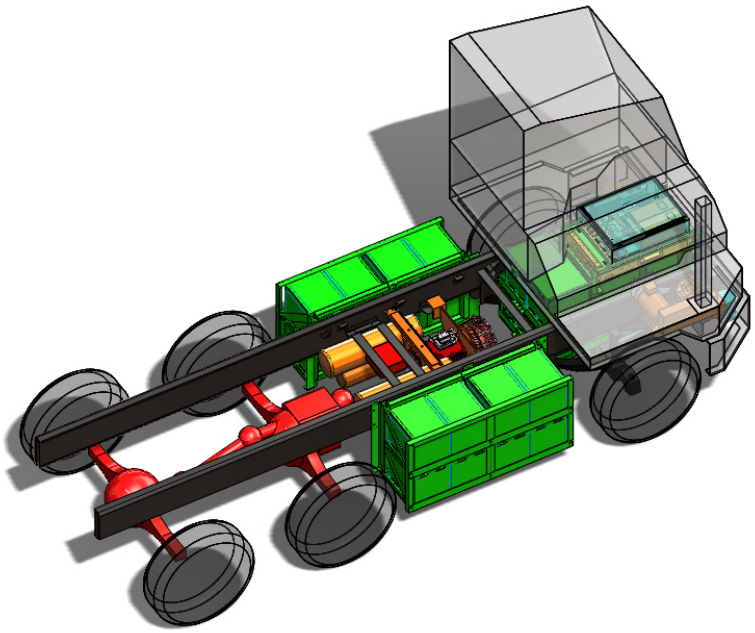

Figure 18. Updated integration drawing #2.

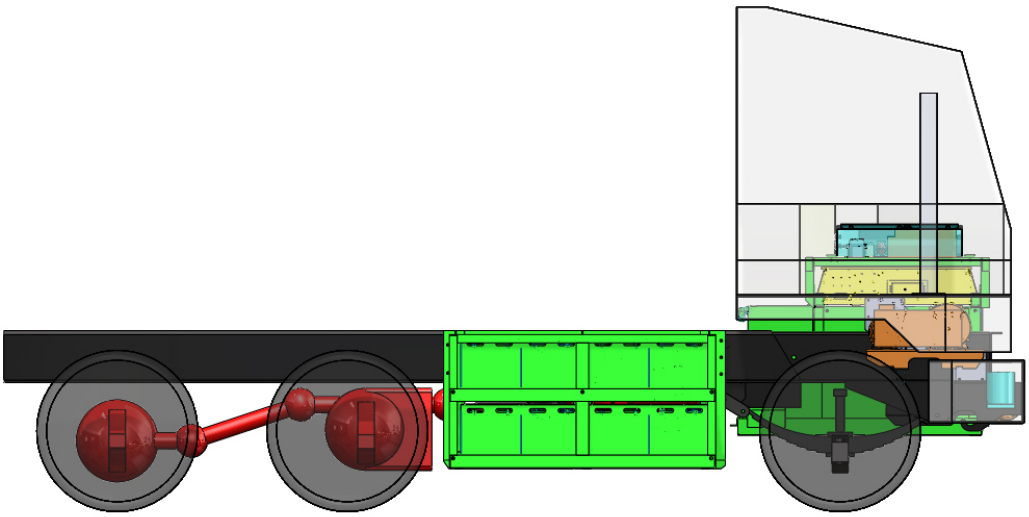

Figure 19. Fully integrated Tractor #1 pulling a loaded trailer during a test run on September 4, 2012.

Figure 20. Main power assembly of Tractor #2 shortly after integration.

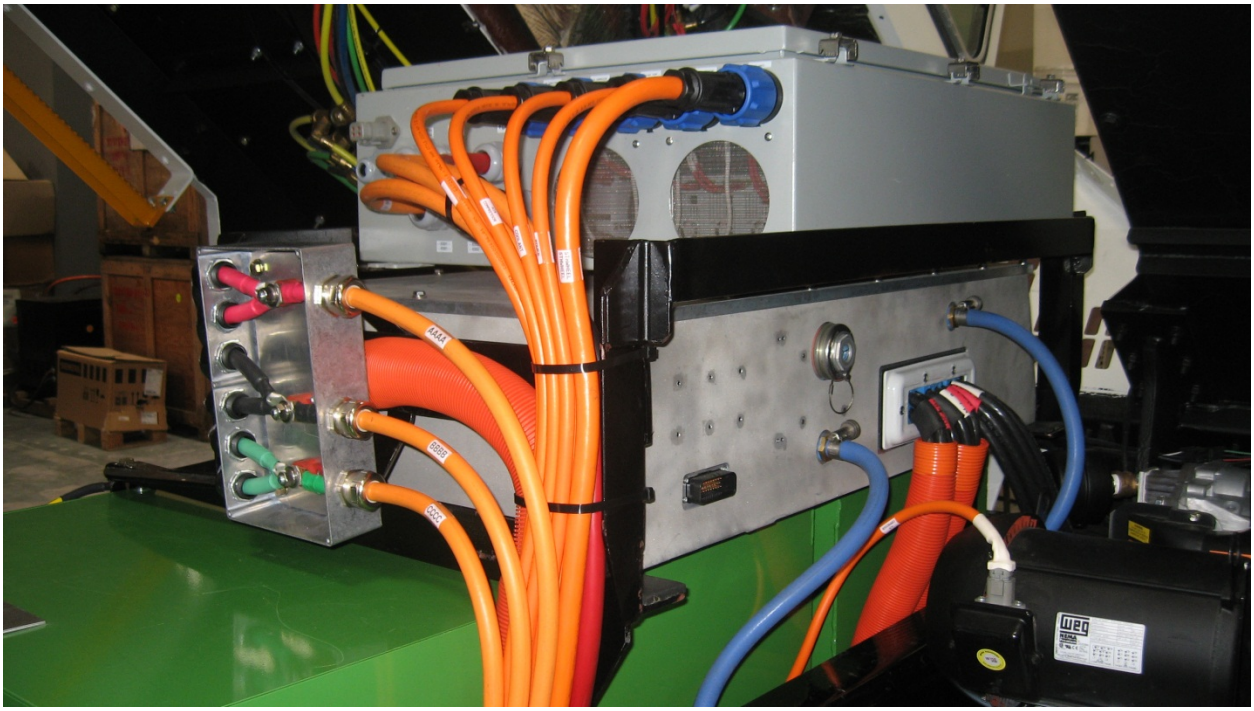

Discussion/Observations

Objectives vs. Results

The overarching objective of Task 2 was to complete installation of electric drive systems into the two HPETT vehicles. All Task 2 objectives were met and, by most measures, results have exceeded initial expectations because the level of component-level testing performed during integration of Tractor #1 was far greater than initially envisioned, and both tractors are expected to have better performance characteristics than originally planned due to the incorporation of more advanced components such as the AMT and ICU. On the negative side, the process of completing the first vehicle, Tractor #1, was significantly delayed by the significant number of drive system improvements undertaken during the integration process, which required the completion of many "nonrecurring" tasks. While these tasks did not have to be repeated for the second vehicle, Tractor #2, or subsequent vehicles, the time devoted to these tasks pushed back the completion dates for both Tractor #1 and Tractor #2 by several months, as compared with the target dates for vehicle completion in the original project schedule.

The direct productive labor effort expended to date on the HPETT project has been 12,956 hours, broken down as follows:

- Hours expended on *Task 1, Drive System Design* (through March 2012 report): 3,790
- Hours expended on *Task 2, Vehicle Integration* (through completion and commissioning of Tractor #1 in early September 2012: 6,070
- Hours expended on *Task 2, Vehicle Integration* and *Task 3, Vehicle Durability Testing* (through completion and commissioning of Tractor #2 on November 10, 2012: 3,096

These are just direct productive labor hours and do not include approximately 1,200 hours contributed by indirect support personnel. Due to the amount of component-level testing and drive system redesign performed during Tasks 2 and 3, TransPower estimates that the total actual recurring effort required to build Tractor #1 was approximately 4,000 hours and that this was reduced to about 2,500 hours for Tractor #2.

Critical issues

When our Task 1 report was submitted in March 2012, the most critical issue facing the HPETT project was the development risk associated with the ICU. This report stated:

"This is a completely new, clean-sheet design product that is required to meet two vital functions – motor control and battery charging. ICU development is being funded separately by TransPower and its ICU manufacturing partner EPC on a separate project, but the HPETT project is nonetheless dependent on availability of a reliable ICU in a timely manner. We have backup solutions in the event of a protracted delay in development of the ICU, but these backup plans have issues themselves. The Quantum inverter which is our backup device for motor control has performed poorly in initial testing with our on-road Navistar truck. This may be due to the fact that the two Quantum inverters we purchased for the Navistar

program in 2011 were reconditioned units, but we won't know for sure until the first new Quantum inverters are delivered to us in April 2012. There are no attractive backup options for battery charging, as the only other commercially available solutions are off-board chargers that would cost significantly more than the ICU and not charge as fast, while also taking up space in the vehicle operator's facility. To avoid the necessity of falling back on these or other backup options, we are doing our best to keep ICU development on track. Initial tests of our first prototype ICU have proceeded favorably, and we remain hopeful that fully functional ICUs capable of controlling tractor motors and recharging tractor batteries will be available by this summer."

We believe the additional effort expended over the past six months in accelerating development of ICU motor control functionality, and in validating the ICU through extensive bench and dynamometer testing, have greatly mitigated the risks surrounding this critical component. The ICU has demonstrated full-power battery charging at the targeted in rate of 70 kW (far in excess of the power levels at which it is expected the two HPETT tractors will be charged), and has demonstrated smooth and reliable motor control in dynamometer tests, initial road trials of our Navistar truck (recently retrofitted with an ICU following continued failures of the Quantum inverters), and early road tests of the first HPETT vehicle. Based on these results, the ICU has greatly exceeded our expectations and we are highly optimistic that we can depend on this product for reliable motor control and battery charging in the two HPETT vehicles.

Other critical issues identified in our Task 1 report related to the reliability of the ESS; the functionality and reliability of the new automated-manual transmission; and "our overall success in integrating the many new components that will have to work together seamlessly for the tractors to be useful." We believe that our successful dynamometer testing of the upgraded ESS design, used in conjunction with the first automated-manual transmission, have gone a long way toward alleviating these concerns. However, vehicle durability testing to date has been performed only in one gear, due to a lengthy delay in perfecting the software and communications required for reliable shifting of the AMT while the vehicle is in motion. As a result, durability testing of the tractors using all three gears and the full capability of the AMT is only now about to begin. This leads to a certain degree of uncertainty over how robust and reliable the AMT will be, particularly during the first few weeks and months of vehicle testing. If problems with the AMT crop up during the next phase of durability testing, the two tractors may need to be delivered to H-E-B locked into second gear, enabling the in-service demonstration to begin while TransPower continues to perfect the AMT. The tractors can be used effectively in second gear, but without the ability to shift into third gear, they would lack the high-speed operating capability desired by H-E-B when its tractors travel on public roads to get from one H-E-B facility to another. If Tractor #1 is delivered to H-E-B locked into second gear, it would be TransPower's plan to keep Tractor #2 at its Poway facilities until the AMT is perfected, then deliver Tractor #2 to H-E-B and send an engineer to H-E-B to retrofit Tractor #1 with whatever equipment or software is required to achieve three-speed shifting. However, based on recent progress, the team presently feels it has a good chance of getting the AMT working reliably in both tractors before they are delivered to H-E-B.

The delay in completing the two tractors and their subsequent durability testing raises an issue mentioned above – reduced time available for field testing the tractors – but we believe this is a comparatively minor one. Both tractors will still be ready for delivery to H-E-B to begin in-service testing before the end of 2012, and will most likely complete at least five months of in-service testing before the term of the project ends. With Tractor #1 already having completed two months validation testing, and Tractor #2

about to undergo two to four weeks of validation testing before it is delivered to H-E-B, these two vehicles will undergo a combined 15 vehicle-months of validation and field testing before the contract ends. Therefore, the delay in completing the two tractors, represents a comparatively minor consideration, especially considering the numerous significant technology advances these vehicles will demonstrate.

Technical and commercial viability of the proposed approach

Based on our successful completion of extensive dynamometer testing of key components, completion of the two HPETT tractors, and completion of two months of initial durability and validation testing of Tractor #1, our belief is that the proposed approach will show itself to be technically viable. The cost of the system remains a concern, as we continue to forecast a drive system cost in excess of $150,000 for the foreseeable future. In addition, TransPower estimates that it presently requires 2,500 labor hours to install its drive system into a tractor. As discussed in our Task 1 report, for this drive system product to be commercially viable, TransPower will have to learn how to install it with expenditure of about half as many labor hours, and the system will have to offer significant operational cost savings. As a result, we have initiated a study of possible ways of reducing the number of hours required to install the system. In addition, we are continuing to update our estimates of fuel and maintenance cost savings, and continue to explore vehicle-to-grid ("V2G") connectivity opportunities as ways of recovering the higher cost of the electric tractor. Once we complete a few months of in-service testing and have a more definitive idea of how efficiently these tractors operate, we'll have a better idea as to whether the operational savings of these vehicles will offset their higher capital cost. We remain optimistic that this will turn out to be the case.

Scope for future work

The next tasks are to complete durability testing of Tractor #1 and to initiate and then quickly complete durability testing of Tractor #2. Vehicle Durability Testing (Task 3) began with Tractor #1 in early September 2012 and is expected to continue with this tractor through the end of November 2012. Durability testing of Tractor #2 is expected to be performed and completed during the second half of November 2012, potentially extending into the first half of December 2012. Vehicle Field Demonstration (Task 4) activities are expected to begin with Tractor #1 at H-E-B's distribution facility in San Antonio in early December 2012, with Tractor #2 joining Tractor #1 by the second half of December 2012, and in-service testing of these vehicles will continue through the end of the contract in May 2013. A Final Report (Task 5) will be submitted by the end of the contract.

Intellectual Properties/Publications/Presentations

TransPower has not applied for any patents nor developed any IP specific to this project. Our work in development of the ICU, AMT, and other innovations has been funded from multiple sources and supports multiple vehicle platforms. We successfully made the first public presentation of an HPETT vehicle and related technical data at the PortTech Expo in San Pedro, California, on September 6, 2012. We continue to share technical data from the project with prospective customers around the world.

Summary/Conclusions

TransPower has designed an advanced high-power electric drive system and has successfully integrated the system into the terminal tractors. Along the way, TransPower has performed numerous upgrades to the drive system design, and has validated key aspects of the design through component-level testing, including testing with two dynamometers. This updated design work completed since our last report includes updated component selection (e.g., use of the ICU to control motors in place of off-the-shelf inverters), updated component designs (e.g., development of the "Mile-Max™" battery module concept), and updated physical placement of the components on the chassis. While integration of the two tractors took several months longer than originally anticipated, we believe the many unplanned improvements we have been able to make to our drive system design justify the added time we spent on this task, and that the accruing benefits will far outweigh any difficulties created by the delay. The next steps are to complete durability testing of both tractors within the next month and place them both into service with H-E-B in Texas before the end of 2012. Leveraging the resources of other electric vehicle projects that have made many of our technology advances possible, we believe the long-term results of the HPETT project will meet and exceed all the major goals and expectations established for this project at the outset.

Contact Information

For further information about this project please contact:

Frank Falcone
TransPower
(630) 327-9779
frank@transpowerusa.com

Appendices

Appendix A: Updated Integration Test Plan (ITP)

From the Grant Agreement (Scope of Work):

> *"2.1.2.3. The PERFORMING PARTY will prepare the Integration Test Plan (ITP), which shall include a description of all tests required to validate suitability of the drive system installation and basic functionality of the drive system and its components."*

Overview

Validation of the design and functionality of vehicles delivered under this contract will be assured through the implementation of this Integration Test Plan (ITP). The ITP consists of four distinct phases of calibration and testing: component-level, assembly-level, subsystem-level, and vehicle system-level. **This Updated Integration Test Plan provides updates to the original plan, related primarily to dynamometer testing completed during Task 2, and to plans for drive testing of the tractors prior to their delivery to H-E-B for in-service testing in San Antonio, TX.** All updates are shown in *italic* type and *Emphasis style*.

Component-Level Testing

Testing to be Performed:

This testing will verify that each individual component is working properly before being integrated into a system. At appropriate points in the vehicle integration schedule, bench-top testing of system controllers, motor inverters, base-vehicle embedded controllers, intelligent safety devices, DC-DC converters, BMS modules and battery system monitors, and accessory inverters will be performed. These tests will include basic power-up, setting of appropriate basic operational parameters such as communication rates and menu-driven calibrations, measurement of basic responses, and adjustment of integration planning based on lessons learned from testing.

Key Results:

A checklist indicating that envelope and mounting feature dimensions are within tolerance limits and indicating successful power-up status check, for each component.

Subassembly-Level Testing Steps

This testing will verify design decisions regarding component space claim, fitment and assembly procedures, completeness of bill-of-materials, and elements of electrical and mechanical safety. These tests provide early feedback on the suitability of interface specifications between subassemblies within critical subsystems.

System Controller and Drive System Software

Testing to be Performed:

- CAN communication verification
- Harness function verification

- Software-in-Loop control code testing

Key Results:

- A check list indicating CAN message rationality.
- A check list verifying harness wiring continuity, by wire number.
- Completed ElecTruck base code and verification that code size does not exceed available memory on ECU.

Electric Accessories and Cooling System

Testing to be Performed:

- Packaging verification
- Power wiring verification
- Air line pressurization verification

Key Results:

- A checklist indicating that all hoses, wires and cables are fully and correctly connected, that any power wiring has passed a continuity test, and that any air lines have been successfully pressurized.

Energy Storage System

Testing to be Performed:

- ESS suitcase packaging verification
- Suitcase BMS wiring and bus bar verification

Key Results:

- A checklist for each suitcase indicating that the cell packaging dimension status has been verified, that the torque on each cell terminal fastener is 14 ft-lbs, that each BMS module is successfully communicating over CAN and that the voltage is within acceptable limits.

Propulsion and Power Transmission

Testing to be Performed:

- Fitment verification
- Motor/Inverter power cabling verification

Key Results:

- A checklist indicating verification of fabricated mounting hardware dimensions and that the power cable routing status has been confirmed.

Base Vehicle

Testing to be Performed:

- Mounting feature verification
- Space claim verification

Key Results:

- A detailed space claim in CAD.

Subsystem Testing Steps

This testing activity will verify initial calibrations and performance calculations for complete subsystems. These tests typically are initiated by manual control commands from the vehicle supervisory controller of cab-mounted controls to verify timing and sequence of operation of subsystems. Sensor integrity and actuator effectiveness are observed. Refined sensor and actuator calibration, fault checking, limited failure modes and effects verification, and isolation verification of electrical, thermal and mechanical integrity are outcomes of these tests.

System Controller and Drive System Software

Testing to be Performed:

- Harness installation verification
- Control Code testing for manual I/O
- Sensor Calibration and verification
- Actuator Calibration and verification
- CAN communication testing.

Key Results:

- A checklist indicating successful completion of a manual control status test.
- Confirmation that various sensor readings are consistent with each other.
- A checklist indicating actuators are responding to control signals successfully.

Electric Accessories and Cooling System

Testing to be Performed:

- Accessory inverter functional testing
- Manual accessory control verification
- Air Compression functional rate test

- Power steering functional rate test
- Cooling system pump and fan function testing
- Fifth Wheel Lift functional rate test

Key Results:

- A checklist verifying the successful completion of the following tests: Variable Frequency Drive start, stop, fault recovery, current, and voltage tests as well as verification that the VFD can supply power to multiple accessories at the same time.
- A table recording the electrical power required to run power steering pump and hydraulic lift pumps at full load, cooling system loop flow rate and pressure, air compressor pump-up time, time required for fifth wheel lift to fully activate.

Energy Storage System

Testing to be Performed:

- Cabling and HV distribution verification and testing
- BMS to cell calibration and verification
- Safety system testing and verification
- Charge and discharge function testing

Key Results:

- Table recording ESS Voltage Drop, terminal temperatures, cell temperatures, cell voltages, ground fault threshold, cell imbalance voltage as received, time to balance, and pack capacity in Ah.

Propulsion and Power Transmission

Testing to be Performed:

- Motor function testing
- Transmission shifting verification

Key Results:

- A table recording ESS power at driveline under a free-spin condition, time to shift up and down under a free-spin condition. *Much of this testing was performed during Task 2 using a dynamometer test set-up that enabled integrated testing of the Central Control Module (CCM), Inverter-Charger Unit (ICU), motor, transmission, and driveline. This testing, discussed in more detail in the main body of this Task 2 report, provided a high degree of confidence in the functionality and reliability of the Propulsion and Power Transmission system prior to its integration into Tractor #1.*

Base Vehicle

Testing to be Performed:

- HMI to controller integration testing
- Braking system test and verification
- Base vehicle wiring test and verification

Key Results:

- Checklist verifying that the HMI and other base-vehicle accessories have been successfully connected.
- Notation of braking cycles per compressor cycle.

Vehicle System Testing Steps

System Controller and Drive System Software

Testing to be Performed:

- Start sequence testing
- Shut-down sequence testing
- Torque security testing
- Fault handling testing
- Torque authority testing

Key Results:

- Table recording time to complete start sequence, time to complete shut-down sequence, time to recognize torque security faults, time to respond to torque security faults, time to reach full speed in free-spin, time to stop free-spin with regenerative braking.

Electric Accessories and Cooling System

Testing to be Performed:

- Accessory Inverter load testing
- Compressor pump up rate test
- Power steering authority test
- Noise, vibration and power consumption testing

Key Results:

- Table recording required power from variable frequency drives under worst case scenario (all accessories activated at the same time), ESS voltage drop under same conditions, and noise level (dB) for accessory systems measured 1 meter from tractor.

Energy Storage System

Testing to be Performed:

- Cell and pack data logging verification
- Cabling and fusing functional verification
- Full cycle charge and discharge testing

Key Results:

- Dataset containing cell voltage, temperature and current collected during a 1 hour test with the vehicle in a stationary vehicle test configuration.

Propulsion and Power Transmission

Testing to be Performed:

- Motor Power testing
- Transmission shift-on-the-fly verification
- Cooling system effectiveness testing

Key Results:

- Dataset containing pack voltage and current, motor and inverter temperatures, shifting times, torque, RPM, vehicle speeds and accessory states and power levels for 1 hour of loaded, low-speed driving on a closed course.

Base Vehicle

Testing to be Performed:

- Final Human Machine Interface calibration and verification of control authority
- ABS system functionality verification
- Refined calibration and verification of communication with and control of base vehicle components.

Key Result:

- Driver rating on a 1-10 scale of driver satisfaction prior to rigorous drive testing.

Updates to Plan

This updated version of the Integrated Test Plan (ITP) has been updated to describe drive testing performed with Tractor #1 in September and October and Tractor #2 in November, prior to delivery of

these tractors to H-E-B in San Antonio for in-service test and evaluation. Key steps in this drive testing plan are as follows:

- *Initial spinning of Tractor #1 wheels, with the completed vehicle on jacks – completed within TransPower's Poway facility on September 1, 2012. This testing validated the basic functionality of the integrated drive system including all accessories.*

- *Initial drive testing of Tractor #1 on a road surface – completed on the grounds of TransPower's Poway facility on September 2-4, 2012. This testing validated the basic ability of the vehicle to drive at low speeds in unloaded conditions, and to shift gears.*

- *Display of Tractor #1 at the PortTech Expo in San Pedro, California, on September 5-6, 2012. This involved basic operation of the vehicle, and provided an opportunity to obtain public feedback on the vehicles.*

- *Independent testing of Tractor #1 by Southern California Edison (SCE) at its Pomona, California, facilities on November 15-21, 2012. SCE was involved with the testing of two experimental hybrid-electric terminal tractors in 2010-11, and has developed a test protocol to simulate yard tractor operations. Their application of this protocol to independent testing of Tractor #1 will greatly enhance the results of this project. This will be the first testing of the tractor under loaded conditions and will provide initial insights into the tractor's reliability, energy efficiency, and operational duration (amount of time it can operate on a single battery charge). This will provide the confidence necessary to deliver Tractor #1 to H-E-B for in-service testing by early December 2012, thereby enabling up to six months of in-service testing of this tractor within the term of the Grant Agreement.*

- *Testing of Tractor #2 in simulated service by TransPower from November14 through December 14, 2012. This testing will help validate the reliability of the tractor and provide the confidence necessary to deliver the vehicle to H-E-B before the end of 2012. If all goes well, this will enable the vehicle to begin in-service operations at H-E-B before January 1, 2013, commencing five months of in-service operation within the term of the Grant Agreement.*

Appendix B: Updated Materials and Components List

Yard Tractor Electric Drive System

1. Motive Drive Subsystem

1.1. Propulsion Assembly

1.1.1. Main Drive Motor Subassembly

1.1.1.1. Main Drive Motor

1.1.1.2. Drive Motor Mounting Hardware

1.1.2. Transmission Subassembly

1.1.2.1. Transmission

1.1.2.2. MasterShift Controller and Shifter

1.1.2.3. MasterShift Cables

1.1.2.4. MasterShift Shifting Hardware Adapter

1.1.2.5. Transmission Mounting Hardware

1.1.2.6. Driveline Subassembly

1.2. Motor Control Assembly

1.2.1. Inverter Subassembly

1.2.1.1. Inverter

1.2.1.2. Inverter Mounting Hardware

1.3. Motive Drive Cooling Assembly

1.3.1. Radiator Subassembly

1.3.2. Coolant Pump Subassembly

1.3.3. Cooling Loop Subassembly

2. Energy Storage Subsystem

2.1. Mile-Max Module Subassembly

2.1.1. Mile Max Module Physical Structure

2.1.2. Mile Max Module Contents

2.2. Energy Storage Vehicle Mounting Hardware

2.2.1. Yard Truck ESS Side Mount

2.2.1.1. Steel

2.2.1.2. Paint

2.2.2. Yard Truck ESS Under Cab Mount

2.3. Pack-Level Integration

2.3.1. BMS Current Module Subassembly

2.3.2. BMS CAN Terminator

2.3.3. Pack-Level Safety Features

3. Electrically-Driven Accessory Subsystem

3.1. Braking Compressor Assembly

3.1.1. Scroll Compressor

3.1.2. 3 HP Braking Motor

3.1.3. Drive Belt

3.1.4. Braking Compresor Mounting Hardware

3.1.5. Air Hoses, Fittings and Adapters

3.2. Steering Pump Assembly

3.2.1. Steering Hydraulic Pump

3.2.2. 5 HP Steering Motor

3.2.3. Steering Pump Mounting Hardware

3.2.4. Steering Pump Hydraulic Fittings and Hoses

3.2.5. Power steering fluid reservoir

3.3. Air Conditioning Assembly

3.3.1. Air Conditioning Compressor

3.3.2. 3 HP Motor

3.3.3. Air Conditioning Mounting Hardware

3.4. Fifth Wheel Assembly

3.4.1. Fifth Wheel Hydraulic Pump

3.4.2. 10 HP Motor

3.4.3. Fifth Wheel Hydraulic Reservoir With Filter

3.4.4. Fifth Wheel Hydraulic Plumbing

3.4.5. Fifth Wheel Mounting Hardware

3.4.6. Relief Valve SubAssembly

3.4.7. Pressure Transducer Subassembly

4. Power Control and Distribution Subsystem

4.1. Central Control Module Assembly

4.1.1. Control Module Structure Subassembly

4.1.2. Electrical Distribution Subassembly

4.1.3. Control Module Cooling Subassembly

4.2. Data and Communications Assembly

4.2.1. Embedded Controls and Communicastions Subassembly

4.2.2. Vehicle Sensor and Indicator Subassembly

4.3. Electrical Distribution Assembly

4.3.1. Low Voltage Distribution Subassembly

4.3.2. High Voltage Distribution Subassembly

4.3.3. Safety Subassaembly

Appendix C: Updated Installation Procedures

Following are updated assembly procedures for the HPETT tractors. Changes from the original assembly procedures are noted in *italic* type and *Emphasis style*.

Figures 21 and 22 are two diagrams denoting major components and their locations on the terminal tractor frame, one from a top view and another showing a side view. *These illustrations show the original planned layouts and are superseded by those shown previously in Figures 17 and 18.*

Figure 21: Diagram of the terminal tractor space claim: Top view

Figure 22: Side view of terminal tractor space claim

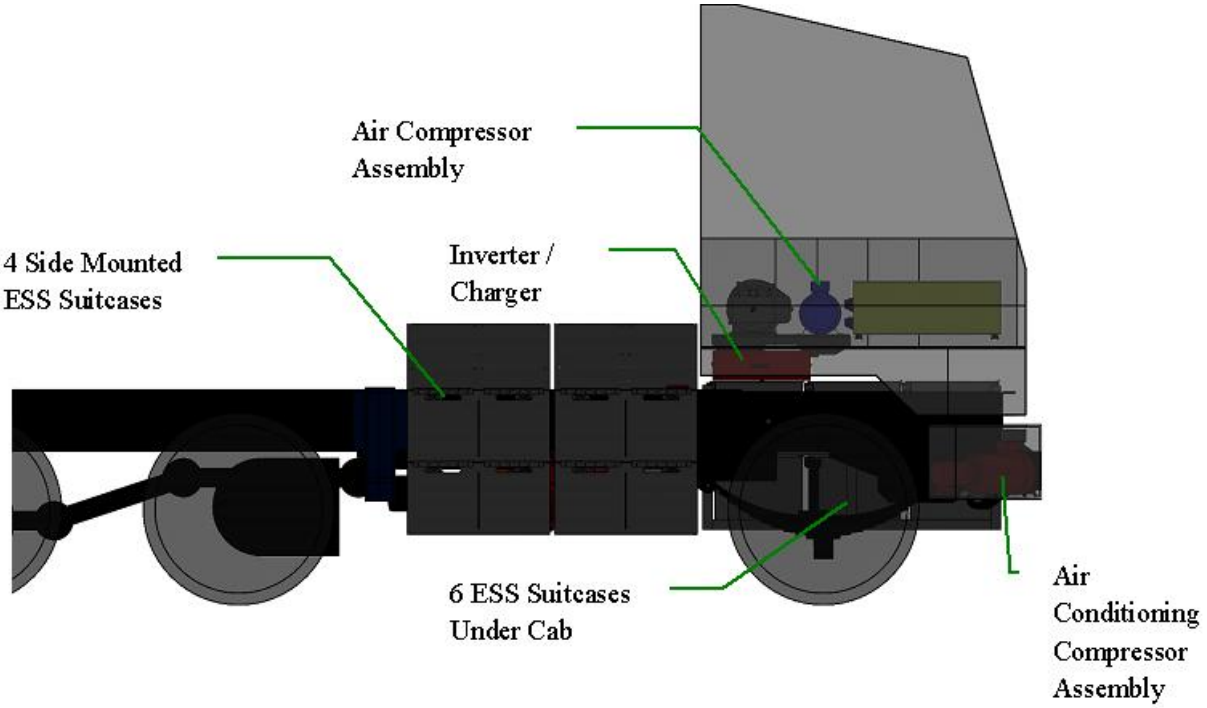

In the updated drive system configuration, the box in Figure 19 identified as "HV and Control Distribution" is now referred to as the "Central Control Module" ("CCM"), and is located on top of the Inverter-Charger Unit (ICU) as opposed to below and behind it, as shown in Figures 19 and 20. This requires the ICU to be installed into the vehicle, under the cab first, followed by the CCM.

Propulsion and Power Transmission Subsystem Installation Procedures

1. Affix transmission to transmission/motor adapter.

2. Attach motor to adapter. Whole assembly shown in Figure 23.

Figure 23: Motor and transmission attached to mounting adapter

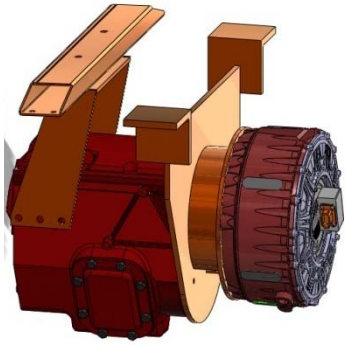

3. Using a hoist for weight support, mount transmission assembly to frame using rubber mounts between adapter and frame.

4. Install U-joint between driveline and output shaft of transmission.

5. Attach wires to motor, observing polarity of wires(transposing any two wires will reverse motor direction).

6. Attach power and control wires to shift mechanism.

7. Fill transmission with proper lubricant.

8. Place inverter/charger on mounting pad and bolt down.

9. Attach high voltage wires to Inverter paying attention to polarity.

10. Connect controls connector to inverter.

Energy Storage Subsystem Installation Procedures

Fabrication and Subsystem Assembly

Mechanical station

1. Place self-aligning suitcase components in position.

2. Verify interior cell dimensions per assembly drawing.

3. Tack weld assembly together. See Figure 24 below.

Figure 24: Mile-Max enclosure tack welded together

4. Align lid mounting tabs per the drawing and tack weld.

5. Align the Mile-Max mounting rails per the drawing and tack weld.

6. Test fit the Mile-Max lid and hinge ensuring mounting holes align. If not, re-tack mounting tabs.

7. Test fit sample cells for snug fit. It should be possible to install and remove by hand without excessive binding or slop.

8. If there is too much of either, re-tack and compensate appropriately.

9. Weld remaining assembly together taking care NOT to weld within the cell interior.

10. Install all remaining suitcase hardware and pass assembly onto the electrical assembly station. Take care to fasten the suitcase lifting straps to the lift as completed suitcase will weigh 175 kg.

Electrical Station

11. With the suitcase on the high strength assembly table, load the suitcase with 16 cells like so:

Figure 25: Cell polarity layout within each suitcase

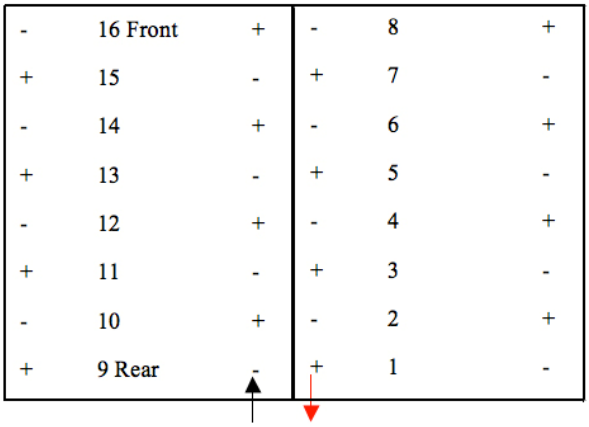

12. Install the two-channel high-voltage connector to the rear of the suitcase and connect with the appropriate bus bar to cells 1 and 9. The colored arrows in Figure 8 represent these connections.

13. Install the BMS modules to the lid with M4 sized hardware.

14. Connect the flexible bus bars and BMS terminals to the remaining cells as follows with M12 cap screws, using Loctite. Figure 26 shows the bus bar connection pattern. Each yellow arrow represents one bus bar connection between two cells.

Figure 26: Bus bar connections for each suitcase

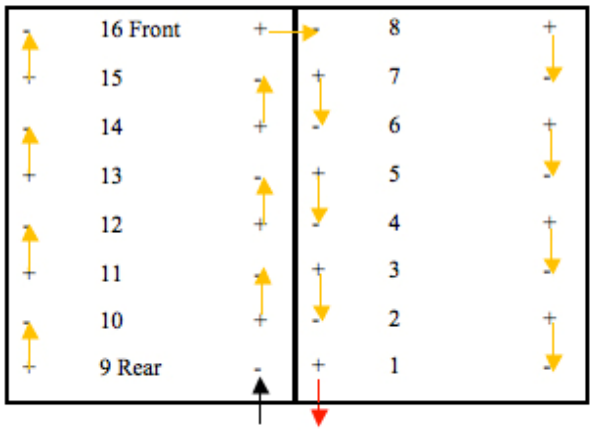

15. Torque all cell terminal hardware to 14 ft-lb.

16. Transfer the suitcases over to the installation station for installation onto the truck.

On-Vehicle Installation

1. Install the front suitcases using M20 hardware in the order shown in Figure 27.
    a. Remember to fasten the high-voltage right angle quick disconnect and BMS quick disconnects prior to bolting down the suitcase.
    b. If the air compressor is installed, remove it prior to installation.

Figure 27: Under-cab suitcase installation order

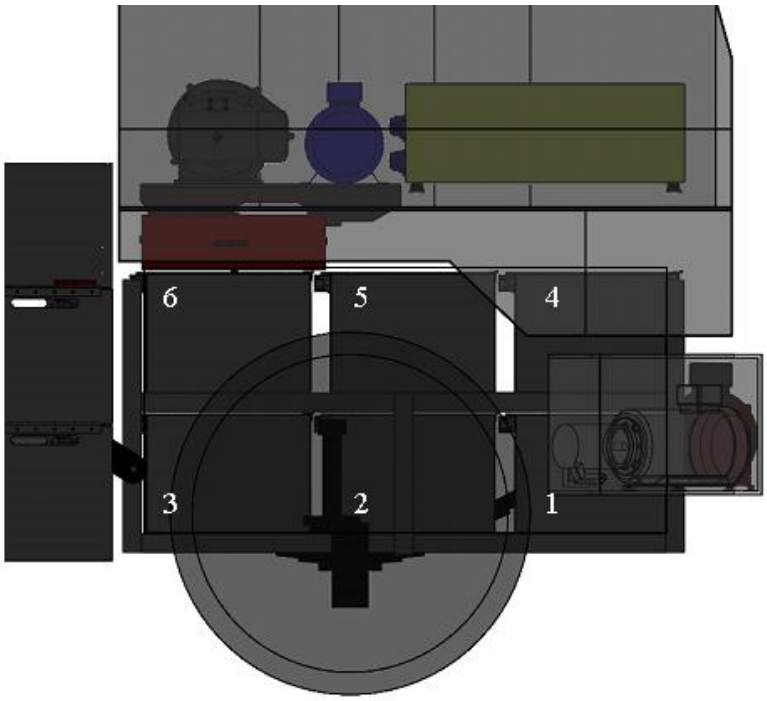

2. Install the side mount suitcases in any order with M20 hardware.

Control Subsystem Installation Procedures

The control system can be installed along side, before, or after most of the components. Critical considerations are listed below to help identify the few critical paths in the truck assembly. Otherwise the majority of the control hardware will be assembled and validated on the bench, then on a dynamometer, and finally moved en masses to the vehicle.

1. Install the under cab suitcase HV and BMS wiring before installing the suitcases.
2. Install the upper bank of side-mounted suitcase HV and BMS wiring before the upper bank is installed.
3. Completely wire up the HV and control distribution box prior to installation.
4. *Install the ICU before installing the Central Control Module.*

Cooling Subsystem Installation Procedures

1. Mount radiator and fan assembly to vehicle frame.

17. Mount coolant pump by the vehicle's front bumper.

18. Install fittings in the coolant pump and JJE motor.

19. Connect the radiator and fan assembly coolant outlet to the coolant pump coolant inlet using heater hose.

20. Connect the coolant pump coolant outlet to the inverter coolant inlet using heater hose.

21. Connect the inverter coolant outlet to the JJE motor coolant inlet using heater hose.

22. Connect the JJE motor coolant outlet to the DC-DC converter coolant inlet using heater hose.

23. Connect the DC-DC converter coolant outlet to the radiator and fan assembly coolant inlet using heater hose.

24. Secure heater hose lines to the chassis using appropriate bend radii and chafe protection practices.

25. Fill the radiator and fan assembly with a 50/50 mixture of Glycol and Water.

26. At this point, running the pump should remove all of the air from the cooling system.

Electrical Accessories Subsystem Installation Procedures

The general approach to the installation of the accessory subsystems is to install each subsystem in its designed space location followed by the installation of the interfacing wires, cables, and hoses.

Power Steering

27. Insert the key into the keyway of the hydraulic pump shaft. Insert the pump shaft into the matching female-keyed shaft receptacle of the motor. Verify the correct mounting orientation and secure the pump to the motor.

28. Install the hydraulic fluid reservoir by securing the reservoir-mounting strap to the mounting bracket.

29. Attach fitting to the hydraulic pump inlet. Attach a hydraulic hose from this fitting to the hydraulic reservoir outlet.

30. Attach fittings to the hydraulic pump outlet and power steering inlet. Connect both fittings with the high-pressure hydraulic hose.

31. Attach fittings to power steering outlet and reservoir inlet. Connect both fittings with a low-pressure hydraulic hose.

32. Connect a braided wire ground strap from the motor case to the vehicle chassis ground.

33. After the power supply conduit has been installed, connect the three phase, L1, L2, L3, and neutral wires to the three phase motor terminals in the junction box.

34. Fill the reservoir with hydraulic fluid to 1 inch above the fill mark on the reservoir. After running the pump and turning the steering wheel to the end of travel in each direction add hydraulic fluid to the fill mark on the reservoir.

Air Compressor

35. Using a hoist for weight support, secure the compressor assembly base mounting plate to the chassis mounting brackets.

36. Screw in the air fitting to the compressor output and torque to the desired orientation. Attach an air hose between the compressor output and the vehicle input.

37. Connect a braided wire ground strap from the motor case to the vehicle chassis ground.

38. After the 230VAC power supply conduit has been installed connect the three phase, L1, L2, L3, and neutral wires to the three phase motor terminals in the junction box.

Fifth Wheel Lift

39. Secure the main hydraulic reservoir tank to the truck chassis and attach the hydraulic fluid filter holder and filter to the tank.

40. Attach the inlet and outlet hydraulic hoses to the main hydraulic reservoir tank.

41. Using a hoist for weight support, secure the 10 Hp motor feet to the mounting bracket.

42. Insert the key into the keyway of the hydraulic pump shaft. Insert the pump shaft into the matching female-keyed shaft receptacle of the motor.

43. Attach a fitting to the inlet side of the hydraulic pump. Attach a low-pressure hydraulic hose to both the inlet side of the hydraulic pump and the outlet of the main hydraulic reservoir.

44. Attach a fitting to the outlet side of the hydraulic pump. Attach a high-pressure hydraulic hose to both the outlet side of the hydraulic pump and the fifth wheel lift control valve.

45. Unscrew the high-pressure hose from the lift cylinders and insert the “Tee” fitting for the high-pressure transducer. Install and attach the shielded twisted pair wires to the transducer.

46. Attach the cab lift hydraulic line to the hydraulic reservoir tank and fill the tank to slightly above the fill mark.

Air Conditioning Compressor

47. Attach the direct coupling jaws to the shafts of the 3 Hp motor and the compressor.

48. Using a hoist for weight support, attach the motor feet directly to the mounting plate.

49. While aligning the coupler jaws and center spider attach the compressor to the mounting plate. Perform final motor – compressor alignment before tightening mounting bolts.

50. Using a hoist for weight support, secure the mounting bracket to the chassis mounting brackets.

51. After the 230VAC power supply conduit has been installed connect the three phase, L1, L2, L3, and neutral wires to the three phase motor terminals in the junction box.

52. If previously disconnected, reconnect the refrigerant lines and torque the nuts. Evacuate the cooling system lines and recharge the refrigerant and lubrication oil.

Electrical Distribution Subsystem Installation Procedures

Preassembly

53. Mount and secure each of the interior components

54. Install and secure the prewired interface connectors.

55. Complete the internal wiring and “ohm test” to verify the correct connections.

56. Install, as required, a ground wire or strap from each component to the box chassis.

On-vehicle Installation

57. Using a hoist for weight support, move the preassembled box to the truck and secure the mounting brackets.

58. Attach a woven mesh wire ground strap between the box and the truck chassis.

59. Attach the external wiring. “Ohm test” to the other end of the wires to assure correct connection.

Figures 17 and 18, shown previously, show CAD models of the updated drive system fully installed onto a terminal tractor chassis.