Texas Optimization Program (TOP)
Directed Assistance Module (DAM) 1

Developing Performance Goals And A Monitoring Strategy for a Surface Water Treatment Plant

STUDENT GUIDE

Latest revision date: August 24, 2019

Contents

Course Description 3
Purpose 3
Planning information 3
Expertise Required: 3
Materials Required: 4
Deliverables 4
Provisional Agenda 5
Activities 6
CHAPTER 1: Document SWTP Monitoring 9
ASSIGNMENT: Plant tour and schematic 9
Instructions for making the plant schematic 11
ASSIGNMENT: START the Process Control Monitoring Form. 11
CHAPTER 2. Compliance and Process Management Monitoring 14
Compliance Monitoring 14
Examples of notes on mandatory monitoring 15
Process Management Monitoring 18
CHAPTER 3. Goals and Acceptable Ranges 21
ASSIGNMENT: Goals and Ranges on the SWTP Monitoring Form. 21
Examples of notes related to goals and ranges: 23
CHAPTER 4. Responding to Readings Outside Acceptable Ranges .. 26
ASSIGNMENT: Complete the last column of the SWTP Monitoring Plan 26
Examples of notes related to responses 28
CHAPTER 5. Recommended Action Plan 31
ASSIGNMENT: Recommended Action Plan 31
Recommended Action Plan Form 32
I. Process Design Issues 32
II. Process Control Issues 32
III.Supplemental Issues 32
Typical Items in a Recommended Action Plan 33
I. Plant Design Issues 33
II. Issues Related to Monitoring Frequency, Action Levels, Appropriate Responses 33
III. Supplemental Issues 33
Attachment 1. Individual Filter Effluent Monitoring 34
Attachment 2. DAM 1. Evaluation Form 38

Directed Assistance Module No. 1

Developing Performance Goals and a Monitoring Strategy for a Surface Water Treatment Plant

Course Description

Purpose

The purpose of this Directed Assistance Module (DAM) is to assist the staff of a surface water treatment plant in their efforts to:

1. develop a process monitoring strategy that meets regulatory requirements and provides information necessary to control the water treatment process;
2. identify the specific monitoring locations, parameters, frequencies, and laboratory methods that will be used;
3. establish performance goals and acceptable operating ranges for the parameters at each monitoring location;
4. identify the actions that will be taken when unacceptable readings occur; and
5. document the information on one or more process control monitoring forms.

Planning information

Expertise Required:

Trainer

This Directed Assistance Module must be given by a trainer who is extremely knowledgeable about process control and monitoring practices at surface water treatment plants. The trainer must be capable of completing all of the objectives of this DAM. The TCEQ would prefer that the trainer hold a B Surface Water license.

Participant:

The public water system staff attending this course should be familiar with the disinfection process and monitoring regimen used at their water treatment plant and either already hold a Water Operators license or at least have a basic understanding of potable water chlorination.

Materials Required:

The following materials are needed to conduct this training:

1. A clipboard, pencil, and blank copies of the forms that will be completed during this project, including:
    a. the Participant Sign Up Sheet (to identify the utility staff who participate in the activity);
    b. the Plant Information Form;
    c. the Treatment Process Monitoring Form(s);
    d. a copy of the completed Recommended Action Plan Form; and
    e. the Project Completion Form.
2. Multiple copies of the following materials *(one for each participant)*
    a. DAM1 handouts
    b. Plant Questionnaire
    c. A Course Completion Certificate

Deliverables

To demonstrate that this activity has been completed, the contractor must submit the following documentation to the TCEQ:

1. the completed Participant Sign Up Sheet
2. a copy of the plant schematic for the treatment plant;
3. a copy of the completed Treatment Process Monitoring Form(s);
4. a copy of the completed Recommended Action Plan Form;
5. the completed Plant Questionnaire from each participant; and
6. the completed Project Completion Form.

Provisional Agenda

This Directed Assistance Module (DAM) will take five to six hours, as shown in Table 1.

Table 1: Estimated Agenda for DAM1

Time	Activity
8:00 – 8:30	Introductions and overview (15 – 30 minutes)
8:30 – 9:30	Plant tour and plans review (45 – 60 minutes)
9:30 – 10:15	Monitoring locations and parameters (45 minutes)
10:15 – 10:30	Break (15 minutes)
10:30 – 11:00	Monitoring frequencies and methods (30 minutes)
11:00 – 12:00	Performance Goals and acceptable operating ranges (60 minutes)
12:00 – 1:00	Lunch (60 minutes)
1:00 – 2:00	Responding to readings outside acceptable range (45 – 60 minutes)
2: 00 – 2:30	Recommended Action Plan (20 – 30 minutes)
2:30 – 3:00	Wrap-up and Questionnaire (15 – 30 minutes)

Activities

Schedule and

Overview and objectives (15 – 30 minutes)

Learn the purpose of the Directed Assistance Module (DAM) and what needs to be accomplished during the day.

Circulate the Participant Sign Up Sheet to document basic information on participants. If CEUs are provided, record license numbers.

Plant tour (45–60 minutes)

The class will take a brief plant tour.

During the plant tour, the trainer will:

1. prepare a plant schematic and document the general layout of the treatment units and the location of chemical feed points;
2. identify the current water quality monitoring parameters, the locations and frequencies at which samples are collected, and the laboratory methods that are used to measure the parameters;
3. identify any inadequacies in the existing water quality monitoring activities; and
4. identify any unnecessary monitoring activities.

Immediately after (or during) the plant tour, the class will prepare the **Plant Schematic** as described in Chapter 1.

Monitoring locations and parameters (45 minutes)

Learn the importance of using sampling locations that minimize the impact of extraneous influences (e.g. proper sample tap orientation on an effluent pipe, minimum residence time in a sample supply line, etc.).

Chapter 1 of the Course Manual for DAM1 shows some examples of mandatory (minimum acceptable) monitoring locations and parameters.

Chapter 2 of the Course Manual shows some of the monitoring locations and monitoring parameters that are often used for process management at surface water treatment plants.

Work together to identify appropriate monitoring locations in the treatment process and the water quality parameters that should be measured at each location. Include the monitoring activities necessary to comply with regulatory requirements (CFE turbidity, IFE turbidity, pH and disinfectant residual at the end of each disinfection zone, raw water temperature, etc). Also, include monitoring activities that are necessary to properly control the treatment process.

Work together to document

Begin completing the **SWTP Monitoring Form** (in Chapter 1)

Break (15 minutes)

Monitoring frequencies and methods (30 minutes)

Work together to identify the appropriate frequency for monitoring each water quality parameter and the laboratory methods used to perform the measurements.

Chapter 1 of the Course Manual for DAM1 shows examples of the minimum mandatory monitoring frequencies and methods for some of the mandatory monitoring that surface water treatment plants must conduct.

Chapter 4 of the Course Manual contains an example of the monitoring frequencies and methods that one plant in Texas uses for process control samples.

Make sure the frequencies and methods are consistent with regulatory monitoring requirements. The monitoring frequencies should also take into consideration the historical range and stability of the parameters being measured.

Work together to eliminate any monitoring activities that are not required or provide no useful information.

Continue filling out the **SWTP Monitoring Form**.

Performance goals and acceptable operating ranges (60 minutes)

Learn the difference between performance goals and acceptable operating ranges.

Examples of typical performance goals and acceptable operating ranges are shown in Chapter 1 of the Course Manual for DAM1.

Examples of mandatory operating ranges are shown in Chapter 4.

Work together to identify appropriate goals and operating ranges for each of the parameters to be monitored. Make sure the goals and operating ranges are consistent with regulatory requirements.

Continue filling out the **SWTP Monitoring Form**.

Lunch (60 minutes)

Responses to readings outside of acceptable operating ranges (45–60 minutes)

Help the plant staff identify appropriate responses to readings that fall outside of acceptable operating ranges. Examples of typical responses are shown in Chapter 3 of the Course Manual for DAM1.

Finish filling out the **SWTP Monitoring Form** (in Chapter 1.)

Recommended Action Plan (20 – 30 minutes)

Work together to identify specific steps that should be taken to implement an effective monitoring strategy at the treatment plant.

Document the steps using the **Recommended Action Plan Form** in Chapter 5.

Wrap-up and questionnaire (15 – 30 minutes)

Each participant should complete a DAM Evaluation (Attachment 2).

While students complete the questionnaire, the instructor will:

- make sure all the students signed in and provided contact information,
- complete the Project Completion Form,
- make copies of the forms that were completed during the training event, and
- prepare and sign a Course Completion Certificate for each participant (or, certificates may be emailed after the class).

CHAPTER 1: DOCUMENT SWTP MONITORING

Learning goals: The first step in determining how good a monitoring program is to document what monitoring the plant is actually doing. That is what Chapter 1 is about.

ASSIGNMENT: PLANT TOUR AND SCHEMATIC

The purpose of the plant tour is to make a drawing of the plant to use for evaluating the existing monitoring procedures and how to improve them. Immediately after (or during) the plant tour, the class will prepare the **PLANT SCHEMATIC**.

The plant may already have a draft plant schematic. If so, make copies and update those during the plant tour.

If there is not already a schematic, you may be able to make a sketch of the general facilities before starting the tour.

During the plant tour, document (or update):

- Layout of the treatment units,
- How water flows between units,
- Location of chemical feed points;
- Monitoring locations and frequencies including:
    - where online meters take samples,
    - whether the location is used for compliance monitoring or process management.

Later, this information can be used to figure out where monitoring is unnecessary, and where additional monitoring may be needed.

An example plant schematic is shown in Figure 1.

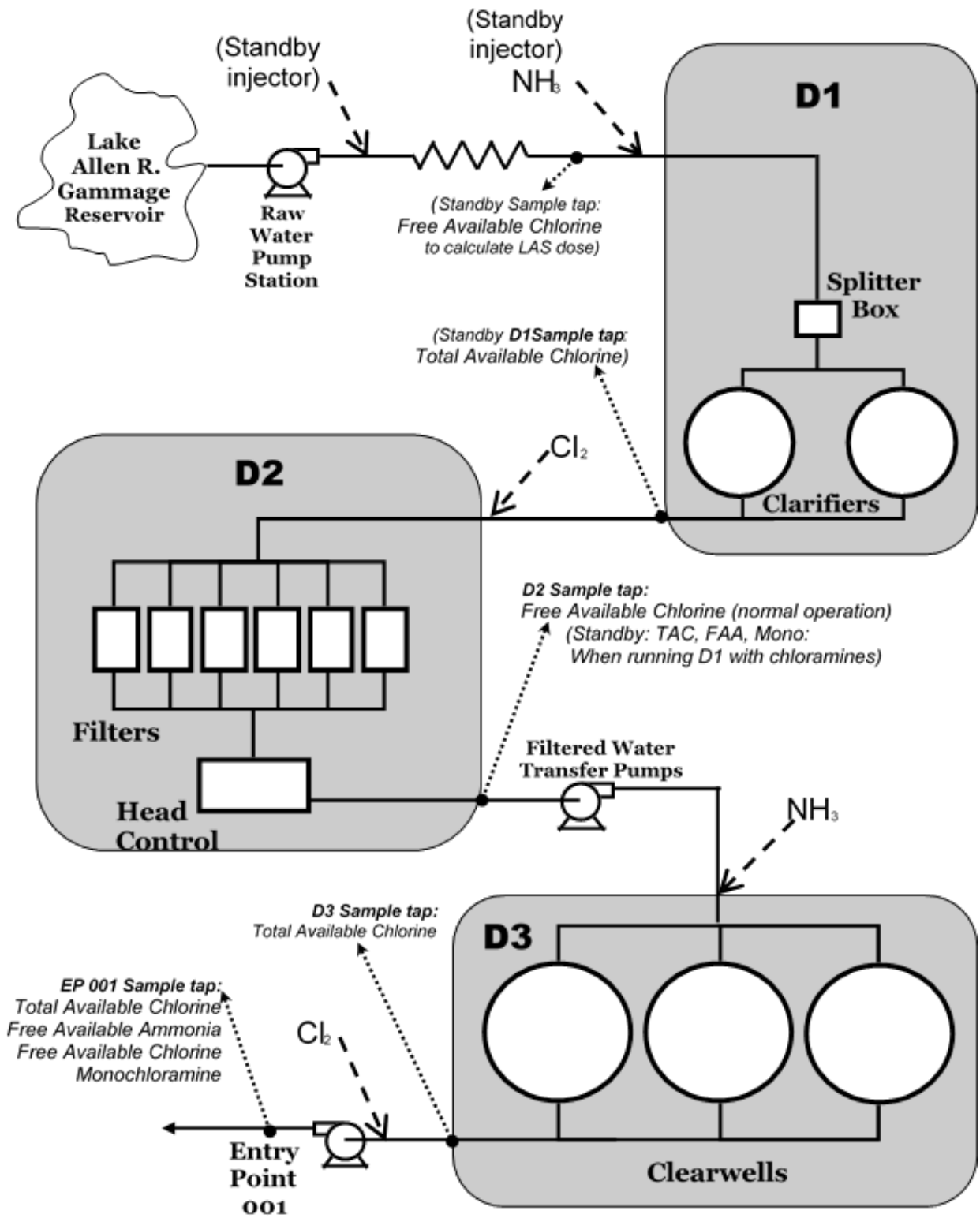

Figure 1. Example plant schematic

Instructions for making the plant schematic

Draw a sketch showing the general sequence of major treatment units from raw water pumps through high service pump station.

Note the feed locations of each chemical used by the plant.

If the plant has a current plant schematic, you may attach that drawing and note any changes to chemical feed or monitoring locations.

Include only those standby chemical feed points that have been used during the previous 12 months.

ASSIGNMENT:
START THE PROCESS CONTROL MONITORING FORM.

After drawing the sketch of the plant, fill out the first three columns of the **SWTP MONITORING FORM** (following page). These columns describe what the plant is actually doing right now.

Later, we will compare that to the mandatory and other recommended monitoring.

On the form, start by listing:

- Monitoring points for raw, settled, filtered water,
- Parameter
- Frequency
- Equipment (analytical method)

Sample Site	Parameter	Frequency	Equipment	Goal	Acceptable Range	Response to Unacceptable Reading

Next, after considering the rule requirements, the following will be listed in future chapters.

- Goal (Chapter 3)
- Acceptable Range (Chapter 3)
- Response to Unacceptable Reading (Chapter 4)

Add pages as needed to capture all monitoring locations.

SWTP MONITORING FORM

Add pages as needed to capture all locations

Sample Site	Parameter	Frequency	Equipment	Goal	Acceptable Range	Response to Unacceptable Reading
Raw Water Tap						
Clarifier Effluent						
Individual Filter Effluent						
Plant Effluent						

SWTP Monitoring Form, Continued

Add pages as needed to capture all locations

Sample Site	Parameter	Frequency	Equipment	Goal	Acceptable Range	Response to Unacceptable Reading

CHAPTER 2.
COMPLIANCE AND PROCESS MANAGEMENT MONITORING

Learning goals: After documenting the actual sampling at the plant, we will consider what sampling needs to be done. Then, by comparing the regulations and process management recommendations to the existing plant, we can figure out if more or less sampling than necessary is scheduled.

There are two kinds of sampling:

- **Compliance:** Total chlorine monitoring for compliance with maximum and minimum residual levels, and
- **Process management:** Monochloramine and free ammonia monitoring to determine the effectiveness of your chloramines, (and nitrite/nitrate monitoring to determine if nitrification is happening).

COMPLIANCE MONITORING

There are two types of samples: Compliance and Process Management. First, Table 2 shows some examples of first kind—mandatory (minimum acceptable) monitoring locations and parameters.

Table 2. Mandatory Compliance Monitoring

Sample Location	Parameter	Frequency	Equipment	Acceptable Range	Comments
Raw Water Tap (prior to any chemical addition)	Flow Rate	every flow rate change	flow meter	NA	
	Turbidity	daily	grab sample or on-line monitor	NA	
	Alkalinity	monthly	titrator	NA	
	TOC	monthly	approved or certified lab	NA	
Clarifier Effluent	TOC	monthly	approved or certified lab	NA	must meet TOC removal requirements
Individual Filter Effluent (IFE)	Turbidity (4 hrs after filter start-up)	each filter start-up	on-line monitor	≤ 0.5 NTU	only at systems serving ≥10,000 people. Also, special studies may be required for exceedance(1)
	Turbidity	depends(1)	depends(1)	≤ 1.0 NTU(1)	special studies may be required for exceedance(1)
Combined Filter Effluent (CFE)	Turbidity	depends(2)	grab sample or on-line monitor	≤ 0.3 NTU at least 95% of the time **and** ≤ 1.0 NTU all of the time	special studies may be required for exceedance(2)
At the End of Each Disinfection Zone (CT Data)	Flow Rate	daily(3)	flow meter or calculated	NA	
	Temperature(4)	daily(3)	thermometer or pH meter	NA	
	pH	daily(3)	pH meter	depends(5)	depends on disinfectant used (see notes)
	Disinfectant Residual	daily(3)	grab sample or on-line monitor	NA	must achieve at least 0.5 logs of *Giardia* inactivation **and** 2.0 logs of viral inactivation
Plant Effluent (Point of Entry to Distribution)	Disinfectant Residual	depends(6)	depends(7)	≥ 0.2 mg/L (if using free chlorine) **or** ≥ 0.5 mg/L (if using chloramines)	based on type of disinfectant leaving the plant
	Chlorine Dioxide	daily	grab sample	0.8 mg/L	only required at plants that use chlorine dioxide
	Chlorite	daily	grab sample	1.0 mg/L	only required at plants that use chlorine dioxide

Examples of notes on mandatory monitoring

(1) IFE Monitoring

Systems that serve 10,000 people or more (and any plant that has more than 2 filters) must monitor IFE turbidity levels once every 15 minutes using an approved on-line turbidimeter, record the 15-minutes readings with a continuous recorder, operate within the acceptable range.

A system that serves fewer than 10,000 people, has only two filters that were installed before October 1, 200, and does not have IFE turbidimeters must use daily grab samples and do not have to operate within the

acceptable range. Any plant that continuously monitors IFE turbidity levels must investigate the cause of any filter exceedance.

(2) CFE TURBIDITY

CFE turbidity levels may be monitored at the clearwell inlet or outlet. If the plant is required to have on-line IFE monitors and recorders, CFE sampling frequency depends on system size . . . those serving fewer than 500 people may monitor once per day or every four hours while those serving 500 people or more must monitor every four hours.

Plants that are staffed around the clock may use either grab samples or on-line turbidimeters while plants that are not staffed continuously must use on-line turbidimeters and recorders to collect data when the plant operates and operators are not present.

Plants that do not have IFE turbidimeters and recorders, must monitor CFE turbidity levels once every 15 minutes using an approved on-line turbidimeter, record all of the 15-minutes readings with a continuous recorder, report all of their readings, and investigate the cause of any consecutive readings above 1.0 NTU.

(3) CT DATA

CT data must be collected after the plant has been operating at the peak flow rate that occurs during the day. This may require multiple samples to be collected if the operators vary the flow rate.

(4) CT TEMPERATURE

Operators may use the raw water temperature for all of the CT calculations.

(5) ALLOWABLE pH

The maximum and minimum allowable pH level in each disinfection zone depends on the type of disinfectant being used. For free chlorine disinfection credit (for *Giardia*), the pH must be no greater than 9.0. For chloramines, pH must be between 6.0 and 9.5. For chlorine dioxide, pH must not drop below 6.0.

(6) Sampling by system size

Sampling frequency depends on system size. See Table 3below.

Table 3. System Size by Population Samples/day

System Size by Population	Samples/day
# 500	1
501 to 1,000	2
1,001 to 2,500	3
2,501 to 3,300	4
> 3,300	every 15 minutes

(7) Large system auto-reporting

All systems serving more than 3,300 people and any plant that is not staffed continuously must use an on-line analyzer and recorder to collect data when the plant operates and operators are not present.

Plants that are staffed around the clock may use either grab samples or an approved on-line chlorine residual analyzer if the system serves no more than 3,300 people.

PROCESS MANAGEMENT MONITORING

Water treatment is complicated. The purpose of compliance monitoring is just to determine if indicators are present and meet the TCEQ standards. Additional monitoring is needed to keep the plant running successfully. That is called process management monitoring.

Table 4 shows some of the monitoring locations and monitoring parameters that are often used for process management at SWTPs.

Review these examples, and consider how they compare to this plant.

Table 4. Typical Examples of Process Management Monitoring

Sample Location	Parameter	Frequency	Equipment
Raw Water Meter	Flow Rate	Once per shift	Ultrasonic meter
Raw Water Tap (10 minutes after startup)	Turbidity	Once per shift	2100N
	pH	Daily	pH meter
	Alkalinity	Daily	titration
	TOC	First Tuesday of every month	reference lab
	Temperature	Once per shift	pH meter
	Chlorine Dioxide (D1)	Once per shift	Amperometeric titrator
Rapid Mix Effluent (10 minutes after startup)	pH (coagulation control)	Once per shift & every time alum dose changes	pH meter
	Chloramine (D2 application point)	before and after every chlorine or ammonia dose change	DPD & colorimeter
Flocculator; 3rd Stage (30 minutes after startup)	Floc Appearance	Every 4 hours	visual
	Floc Settling Rate	Daily & every time alum dose changes	Jar test jar
Rectangular Sedimentation Basin Effluent	Floc Appearance	Every 4 hours	visual
	Turbidity	Once per shift & every time alum dose changes	2100N

Sample Location	Parameter	Frequency	Equipment
(3 hours after startup)	pH (D2A)	once per shift & before and after every chlorine or ammonia dose change	pH meter
	Chloramine (D2A)	once per shift & before and after every chlorine or ammonia dose change	DPD & colorimeter
Solids Contact Clarifier Effluent (1 hour after startup)	Floc Appearance	Every 4 hours	visual
	Floc Settling Rate (floc chamber)	Daily & every time alum dose changes	Jar test jar
	Solids Concentration (floc chamber)	Daily	Imhoff Cone
	Sludge Blanket cond.	Every 4 hours	visual
	Turbidity	Once per shift & every time alum dose changes	2100N
	pH (D2B)	once per shift & before and after every chlorine or ammonia dose change	pH meter
	Chloramine (D2B)	once per shift & before and after every chlorine or ammonia dose change	DPD & colorimeter
Splitter Box Effluent (10 minutes after startup)	pH (pH adjustment point)	before and after every chlorine or ammonia dose change	pH meter
	Chloramine (D3 application point)	before and after every chlorine or ammonia dose change	DPD & colorimeter
Individual Filter Effluent	Turbidity	every 15 minutes	1720D
	Turbidity	Daily (for comparison) (30 minutes after startup)	1720D & 2100N
	Turbidity	4 hours after startup	1720D or 2100N

Sample Location	Parameter	Frequency	Equipment
	Flow Rate	every time a D3 sample is collected	venturi meter
	TOC	First Tuesday of every month	reference lab
Combined Filter Effluent	Turbidity	every 15 minutes	1720D
	pH (D3)	once per shift & before and after every chlorine or ammonia dose change	pH meter
	Chloramine (D3)	once per shift & before and after every chlorine or ammonia dose change	DPD & colorimeter
Clearwell Influent	Chloramine (D4 application point)	before and after every chlorine or ammonia dose change	DPD & colorimeter
Clearwell Effluent	pH (D4)	once per shift & before and after every chlorine or ammonia dose change	pH meter
	Chloramine (D4)	once per shift & before and after every chlorine or ammonia dose change	DPD & colorimeter
	pH	Daily	pH meter
	Alkalinity	Daily	titration
	Turbidity	once per shift	2100N
	Chlorine dioxide	Daily	Amp. Titrator
	Chlorite	Daily	Amp. Titrator

CHAPTER 3.
GOALS AND ACCEPTABLE RANGES

Learning goals: This chapter describes goals and acceptable ranges.

ASSIGNMENT:
GOALS AND RANGES ON THE SWTP MONITORING FORM.

After completing the first three columns of the SWTP Monitoring Form, it is time to fill out two of the last three columns:

Sample Site	Parameter	Frequency	Equipment	Goal	Acceptable Range	Response to Unacceptable

Table 5 shows some examples of goals and ranges for discussion. Consider whether these can be modified and used for this SWTP.

Table 5. Examples of Typical Performance Goals and Acceptable Ranges

Sample Location	Parameter	Performance Goal	Acceptable Range
Raw Water Meter	Flow Rate	None	None
Raw Water Tap (10 minutes after startup)	Turbidity	None	< 150 NTU
	pH	7.2 – 7.6	7.2 – 7.6
	Alkalinity	> 145 mg/L	None
	TOC	None	None
	Temperature	None	None
	Chlorine Dioxide (D1)	0.25 mg/L	0.10 – 0.60 mg/L

Sample Location	Parameter	Performance Goal	Acceptable Range
Rapid Mix Effluent (10 minutes after startup)	pH (coagulation control)	6.9 – 7.2	6.5 – 7.5
	Chloramine (D2 application point)	1.2 – 1.5 mg/L	0.3 – 2.5 mg/L
Flocculator; 3rd Stage (30 minutes after startup)	Floc Appearance	well-defined floc with clear water between floc particles	Unacceptable cloudy water
	Floc Settling Rate	at 10 cm: 2.0 – 3.5 NTU after 15 minutes	at 10 cm: < 5.0 NTU after 15 minutes
Rectangular Sedimentation Basin Effluent (3 hours after startup)	Floc Appearance	clear water no more than 30 feet from flocculator wall	Unacceptable visible floc wall extending past first sludge rake
	Turbidity	< 2.0 NTU	< 5.0 NTU
	pH (D2A)	7.2 – 7.4	None
	Chloramine (D2A)	0.6 – 1.5 mg/L	0.2 – 2.0 mg/L
Solids Contact Clarifier Effluent (1 hour after startup)	Floc Appearance	well-defined floc with clear water between floc particles	Unacceptable cloudy water
	Floc Settling Rate (floc chamber)	at 10 cm: 1.5 – 3.0 NTU after 15 minutes	at 10 cm: < 3.5 NTU after 15 minutes
	Solids Concentration (floc chamber)	8 – 12 %	6% – 19%
	Sludge Blanket Appearance	compact blanket surface no more than 2 feet above bottom of skirt	Unacceptable fluffy blanket surface that comes closer than 3 feet to the launderer troughs
	Turbidity	< 1.0 NTU	< 3.5 NTU
	pH (D2B)	7.2 – 7.4	None
	Chloramine (D2B)	0.8 – 1.5 mg/L	0.5 – 2.0 mg/L
Splitter Box Effluent (10 minutes after startup)	pH (pH adjustment point)	7.4 – 7.6	7.4 – 8.0
	Chloramine (D3 application point)	1.8 – 2.0 mg/L	1.0 – 3.0 mg/L

Sample Location	Parameter	Performance Goal	Acceptable Range
Individual Filter Effluent (See Attachment 1)	Turbidity (15 minute)	< 0.80 NTU	< 0.80 NTU (TCEQ limit = 1.0 NTU)
	Turbidity (4 hour)	< 0.20 NTU	< 0.30 NTU (TCEQ limit = 0.5 NTU)
	Turbidity Spike	< 0.40 NTU	< 0.80 NTU
	Flow Rate	None	None
	TOC	None	None
Combined Filter Effluent	Turbidity	< 0.25 NTU	< 0.35 NTU
	pH (D3)	7.4 – 7.6	7.4 – 8.0
	Chloramine (D3)	1.2 – 1.5 mg/L	0.4 – 2.0 mg/L
Clearwell Influent	Chloramine (D4 application point)	1.5 – 1.8 mg/L	1.5 – 2.5 mg/L
Clearwell Effluent	pH (D4)	7.4 – 7.6	7.4 – 8.0
	Chloramine (D4)	1.5 – 1.8 mg/L	1.5 – 2.5 mg/L
	Alkalinity	> 120 mg/L	None
	Turbidity	< 0.25 NTU	< 0.35 NTU
	Chlorine dioxide	BDL	<0.30 mg/L
	Chlorite	< 0.5 mg/L	<0.8 mg/L

Examples of notes related to goals and ranges:

NOTE 1:

This note applies under any of the following circumstances:

1) The raw turbidity level exceeds 150 NTU;

2) The settled water turbidity at the effluent of the Sedimentation Basin or the Solids Contact Clarifier exceeds acceptable levels; or

3) The floc in either flocculation unit does not appear to be well-formed or is not settling properly.

Under those conditions, the operator on duty shall:

1) Calculate the current coagulant dose;

2) Run a jar test to determine the desired dose; and

3) Contact the chief operator.

NOTE 2:

This note applies if the disinfectant residual at the point of application is not within the acceptable range.

Under those conditions, the operator on duty shall:

1) Calculate the current chlorine and ammonia doses;

2) Determine the desired chlorine and ammonia feed rates; and

3) Make the necessary changes and resample.

NOTE 3:

This note applies if the disinfectant residual at the end of the disinfection zone is not within the acceptable range. Under those conditions, the operator on duty shall:

1) Calculate current chlorine and ammonia doses;

2) Measure the chloramine residual at the point of application;

3) Determine what the new chloramine residual needs to be;

4) Calculate the desired chlorine and ammonia feed rates; and

5) Make the necessary changes and resample at the point of application.

NOTE 4:

This note applies if the turbidity level at the CFE or clearwell effluent sampling points are above acceptable levels. Under those conditions, the operator on duty shall:

1) Determine if the CFE and clearwell effluent turbidity levels are lower than the IFE turbidity levels. (If they are, contact the chief operator. If they are not, then proceed to step b).

2) Measure the pH, Iron, Manganese, and Aluminum levels at the sample site, and then contact the chief operator.

NOTE 5:

This note applies if the pH in the combined filter effluent (the sampling point for Disinfection Zone D3) is not within acceptable levels. In this case, the operator on duty shall:

1) Test the pH of the Splitter Box effluent.

2) If the pH of the Splitter Box Effluent is acceptable, contact the Chief Operator to inform him of a possible problem in Disinfectant Zone D3.

3) If the pH of the Splitter Box effluent is unacceptable, make the necessary adjustments to achieve an acceptable pH through

Disinfectant Zone D3.

CHAPTER 4. RESPONDING TO READINGS OUTSIDE ACCEPTABLE RANGES

Learning goals: This chapter describes how SWTP operators should respond when the readings don't meet the goals or acceptable ranges.

ASSIGNMENT:
COMPLETE THE LAST COLUMN OF THE SWTP MONITORING PLAN

Finally, we are ready to complete the last column of the **SWTP MONITORING FORM**.

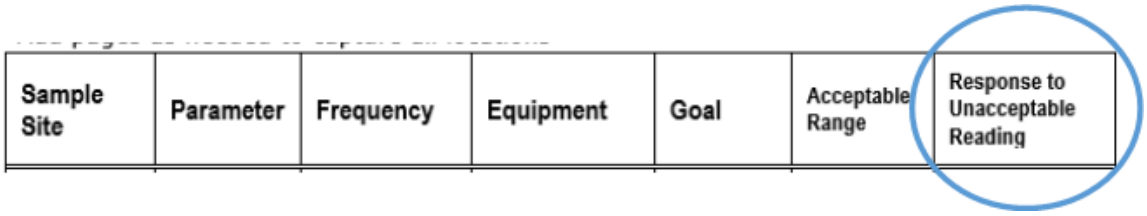

Sample Site	Parameter	Frequency	Equipment	Goal	Acceptable Range	Response to Unacceptable Reading

Table 6 shows some typical responses to unacceptable ranges for a selection of parameters. These can be used as a starting point for completing the **SWTP MONITORING FORM**.

Table 6. Examples of Typical Responses to Unacceptable Readings

Sample Location	Parameter	Acceptable Range	Response to Unacceptable Reading
Raw Water Meter	Flow Rate	None	NA
Raw Water Tap (10 minutes after	Turbidity	< 150 NTU	See Note 1
	pH	7.2 – 7.6	Contact chief operator
	Alkalinity	None	NA

Sample Location	Parameter	Acceptable Range	Response to Unacceptable Reading
startup)	TOC	None	NA
	Temperature	None	NA
	Chlorine Dioxide (D1)	0.10 – 0.60 mg/L	Contact chief operator
Rapid Mix Effluent (10 minutes after startup)	pH (coagulation control)	6.5 – 7.5	Contact chief operator
	Chloramine (D2 application point)	0.3 – 2.5 mg/L	See Note 2
Flocculator; 3rd Stage (30 minutes after startup)	Floc Appearance	Unacceptable cloudy water	See Note 1
	Floc Settling Rate	at 10 cm: < 5.0 NTU after 15 minutes	See Note 1
Rectangular Sedimentation Basin Effluent (3 hours after startup)	Floc Appearance	Unacceptable visible floc wall extending past first sludge rake	See Note 1
	Turbidity	< 5.0 NTU	See Note 1
	pH (D2A)	None	NA
	Chloramine (D2A)	0.2 – 2.0 mg/L	See Note 3
Solids Contact Clarifier Effluent (1 hour after startup)	Floc Appearance	Unacceptable cloudy water	See Note 1
	Floc Settling Rate (floc chamber)	at 10 cm: < 3.5 NTU after 15 minutes	See Note 1
	Solids Conc. (floc chamber)	6% – 19%	Adjust sludge blowdown duration until desired solids concentration is reestablished
	Sludge Blanket Appearance	Unacceptable fluffy blanket surface that comes closer than 3 feet to the launderer troughs	See Note 1
	Turbidity	< 3.5 NTU	See Note 1
	pH (D2B)	None	NA
	Chloramine (D2B)	0.5 – 2.0 mg/L	See Note 3

Sample Location	Parameter	Acceptable Range	Response to Unacceptable Reading
Splitter Box Effluent (10 minutes after startup)	pH (pH adjustment point)	7.4 – 8.0	1) Adjust caustic feed rate by 5% and repeat test
	Chloramine (D3 application point)	1.0 – 3.0 mg/L	See Note 2
Individual Filter Effluent	Turbidity (15 minute)	< 0.80 NTU	Backwash Filter
	Turbidity (4 hour)	< 0.30 NTU	1) Backwash (or re-backwash) Filter 2) Leave filter off-line for 45 minutes then slowly return to service
	Turbidity Spike	< 0.80 NTU	1) Leave filter off-line for 45 minutes then slowly return to service 2) Re-backwash if no improvement
	Flow Rate	None	NA
	TOC	None	NA
Combined Filter Effluent	Turbidity	< 0.35 NTU	See Note 4
	pH (D3)	7.4 – 8.0	See Note 5
	Chloramine (D3)	0.4 – 2.0 mg/L	See Note 3
Clearwell Influent	Chloramine (D4 application point)	1.5 – 2.5 mg/L	See Note 2
Clearwell Effluent	pH (D4)	7.4 – 8.0	Contact chief operator
	Chloramine (D4)	1.5 – 2.5 mg/L	See Note 3
	Alkalinity	None	NA
	Turbidity	< 0.35 NTU	See Note 4
	Chlorine dioxide	<0.30 mg/L	Contact chief operator
	Chlorite	<0.8 mg/L	Contact chief operator

Examples of notes related to responses

NOTE 1:

This note applies under any of the following circumstances:

1) The raw turbidity level exceeds 150 NTU;

2) The settled water turbidity at the effluent of the Sedimentation Basin or the Solids Contact Clarifier exceeds acceptable levels; <u>or</u>

3) The floc in either flocculation unit does not appear to be well-formed or is not settling properly.

Under those conditions, the operator on duty shall:

1) Calculate the current coagulant dose;

2) Run a jar test to determine the desired dose; <u>and</u>

3) Contact the chief operator.

NOTE 2:

This note applies if the disinfectant residual at the point of application is not within the acceptable range. Under those conditions, the operator on duty shall:

1) Calculate the current chlorine and ammonia doses;

2) Determine the desired chlorine and ammonia feed rates; <u>and</u>

3) Make the necessary changes and resample.

NOTE 3:

This note applies if the disinfectant residual at the end of the disinfection zone is not within the acceptable range. Under those conditions, the operator on duty shall:

1) Calculate current chlorine and ammonia doses;

2) Measure the chloramine residual at the point of application;

3) Determine what the new chloramine residual needs to be;

4) Calculate the desired chlorine and ammonia feed rates; <u>and</u>

5) Make the necessary changes and resample at the point of application.

NOTE 4:

This note applies if the turbidity level at the CFE or clearwell effluent sampling points are above acceptable levels. Under those conditions, the operator on duty shall:

1) Determine if the CFE and clearwell effluent turbidity levels are lower than the IFE turbidity levels. (If they are, contact the chief operator. If they are not, then proceed to step b).

2) Measure the pH, Iron, Manganese, and Aluminum levels at the sample site, and then contact the chief operator.

NOTE 5:

This note applies if the pH in the combined filter effluent (the sampling point for Disinfection Zone D3) is not within acceptable levels. In this case, the operator on duty shall:

1) Test the pH of the Splitter Box effluent.

2) If the pH of the Splitter Box Effluent is acceptable, contact the Chief Operator to inform him of a possible problem in Disinfectant Zone D3.

3) If the pH of the Splitter Box effluent is unacceptable, make the necessary adjustments to achieve an acceptable pH through Disinfectant Zone D3.

CHAPTER 5.
RECOMMENDED ACTION PLAN

Learning goals: The key to success for any project is follow up. This chapter discusses what follow-up actions should be taken to achieve a successful SWTP sampling, goal setting, and response strategy.

ASSIGNMENT: Recommended Action Plan

Complete the **RECOMMENDED ACTION PLAN FORM**. Describe who and when the actions should be completed by.

Use the guidance below to develop a list of follow up actions and changes that are needed on the SWTP's monitoring strategy. A list of typical actions is shown following the form.

I. PROCESS DESIGN ISSUES

Describe the action steps related to facilities and equipment that are needed to implement effective process control at the plant. Refer to the next page for typical examples.

II. PROCESS CONTROL ISSUES

Describe the action steps related to monitoring frequency, action levels, or responses that should be taken to achieve effective process control at the plant. Refer to the next page for typical examples.

III. SUPPLEMENTAL ISSUES

Describe the action steps related to any other issues that should be addressed to implement effective process control at the plant. Refer to the next page for typical examples.

Make copies for management and staff who are mentioned in the form.

RECOMMENDED ACTION PLAN FORM

I. Process Design Issues

Description of Action Step	By Whom	By When

II. Process Control Issues

Description of Action Step	By Whom	By When

III.Supplemental Issues

Description of Action Step	By Whom	By When

TYPICAL ITEMS IN A RECOMMENDED ACTION PLAN

Use these examples as a starting point for writing items for this SWTP

I. Plant Design Issues

- Install (Modify) _____ *(Cl_2, turbidity, pH, etc)* sample taps at _____ to enable the operators to more effectively monitor the _____ process.
- Obtain a _____ (sampling dipper, sludge judge, etc) so that _____ (sludge, settled water, flocculated water, etc) samples can be collected from the _____ (clarifier, settled water weir, rapid mix, etc)
- Obtain test equipment for _____ *(IFE, CFE, Cl_2, monochloramine, ammonia, etc)*
- Adjust the recorder span for the _____ *(IFE, CFE, Cl_2, etc)* on-line monitor so that the instruments can accurately record reading of at least _____ *(NTU, mg/L, etc)*

II. Issues Related to Monitoring Frequency, Action Levels, Appropriate Responses

- Begin monitoring _____ (pH, settling time, NTU, etc) at the _____ (rapid mix, last stage of flocculation, etc) at least once every _____ (day, shift, 2 hrs, etc)
- Revise the treatment plant monitoring plan to reflect monitoring changes
- Develop written procedures responding to results that exceed action levels.
- Develop written procedures for _____

III. Supplemental Issues

- Addition training on _____ (chemical dosage calculations, process control for chloramination, process control for coagulation, filter backwash procedures, etc)
- The plant needs to investigate alternative treatment strategies because _____ (elevated DBPs levels, low inactivation ratios, existing treatment processes are inefficient/ineffective, etc)

ATTACHMENT 1.
INDIVIDUAL FILTER EFFLUENT MONITORING

You are required to test levels of individual-filter-effluent (IFE) turbidity. IFE turbidity monitoring is crucial because a single filter's poor performance can be hard to detect if you are only monitoring the turbidity of the water as it leaves the entire filter bank or the clearwell.

The IFE monitoring requirements depend on the size of your system and the design of the plant.

For example, if your plant uses more than two conventional filters (such as a gravity or pressure filter containing sand, anthracite, or any other granular media), it must monitor and record the turbidity level of the water produced by each filter once every 15 minutes that the filter is sending water to the clearwell. It doesn't matter how many people your plant serves; if it has more than two conventional filters, each filter must have an online turbidimeter and recorder.

Figure 2 shows the monitoring requirements for these plants.

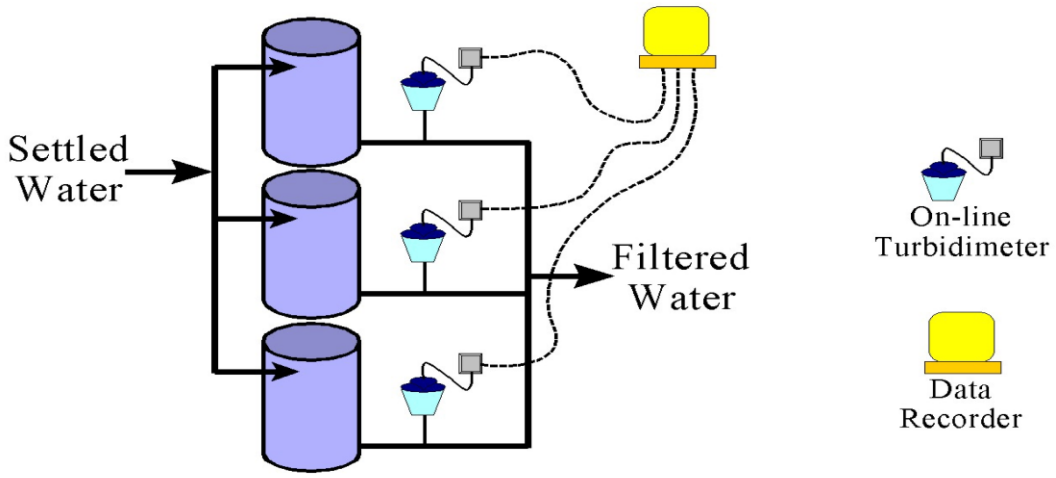

Figure 2. Schematic showing IFE-monitoring requirements for plants with more than two conventional filters.

If your plant has only two conventional filters, the monitoring requirements depend on how many people your plant serves.

If your plant serves 10,000 people or more (including those served through your wholesale connections), you must monitor and record the turbidity level of each filter at least once every 15 minutes.

Option 1 in Figure 3 represents the monitoring requirements for those larger plants.

If your plant serves fewer than 10,000 people (including those served through your wholesale connections), you must either:

- monitor and record the turbidity level of each filter at least once every 15 minutes OR
- monitor and record the turbidity level of blended water entering the clearwell at least once every 15 minutes AND monitor the turbidity level leaving each filter at least once each day.

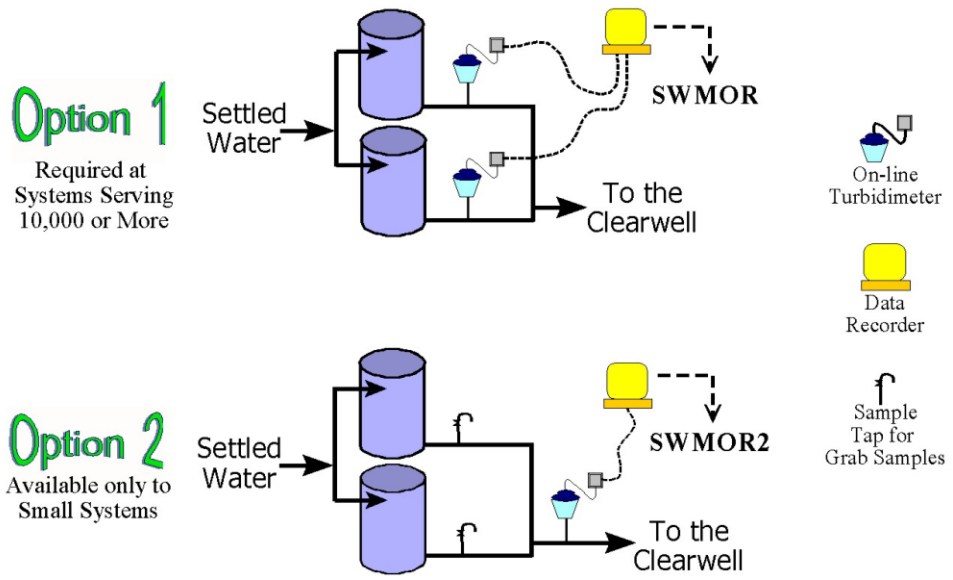

Figure 3. Schematic showing IFE-monitoring requirements for plants with only two conventional filters.

Plants that use cartridge filters may have even more IFE monitoring options (Figure 4). The information in Figure 4 is based on the monitoring options that existed at the time that this document was published. However, some of these options may be restricted or eliminated as we revise our implementation policies and regulatory requirements in response to new federal rules or guidance from the EPA. To keep aware of the latest developments, you should periodically check the EPA's drinking water web pages:

water.epa.gov/drink/index.cfm

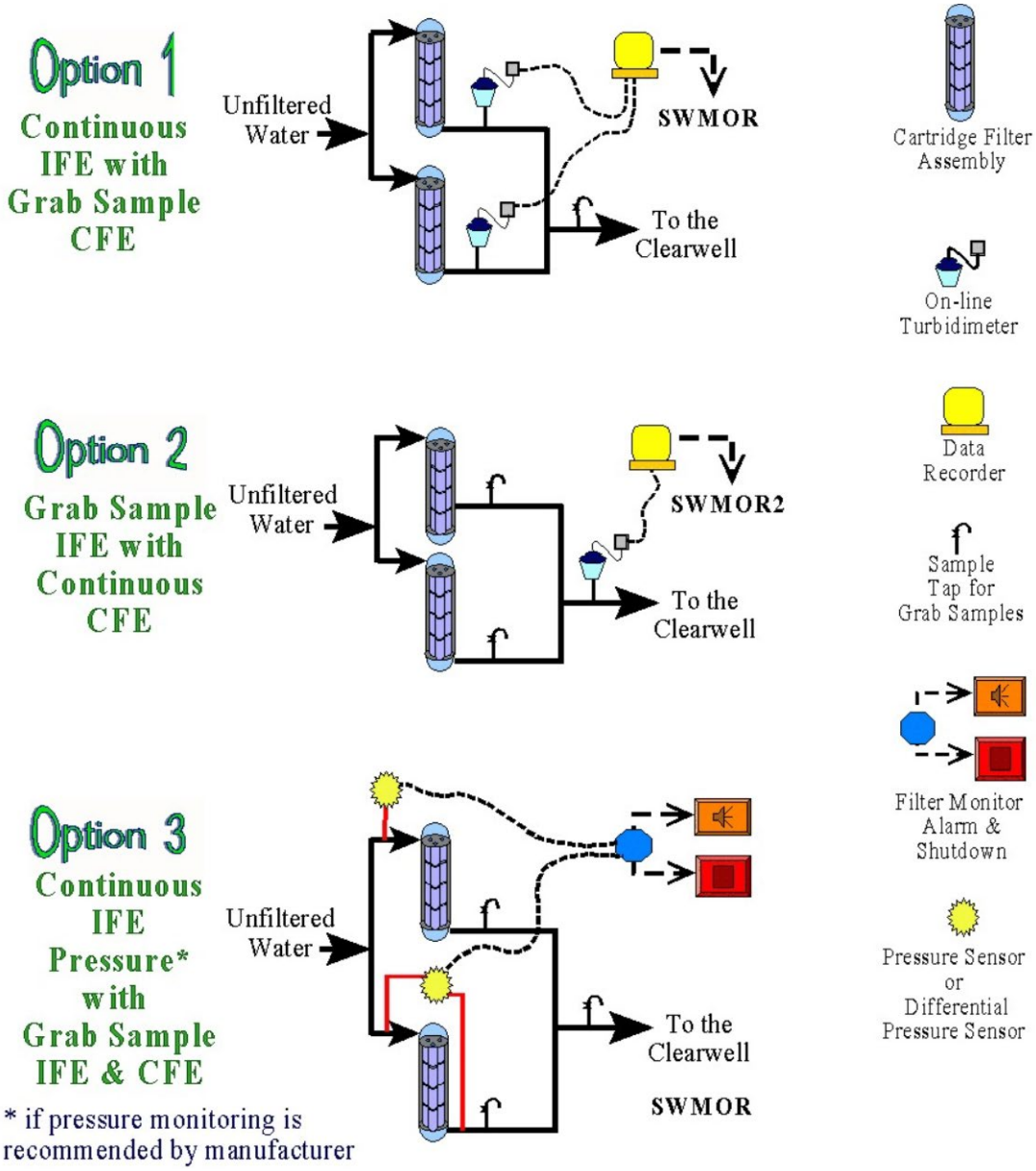

Figure 4. Schematic showing IFE-monitoring requirements for plants with cartridge filters.

Plants that use membrane filters must continuously monitor the turbidity level or particle count in the water produced by each rack, or bank, of membrane modules or units. Figure B-4 shows the IFE monitoring requirements for a plant using 10 membrane units that are configured in two racks of five modules each.

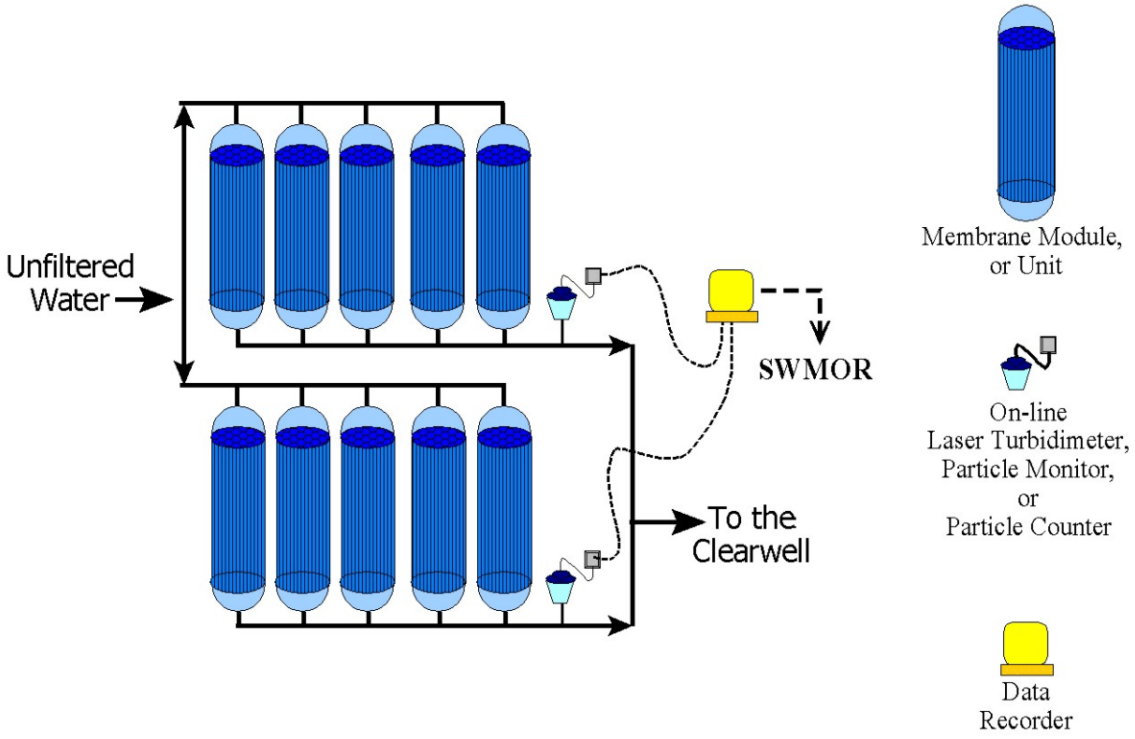

Figure 5. Schematic showing IFE-monitoring requirements for a plant with membrane filters.

Plants that use membranes may use one of three types of devices to continuously monitor membrane performance. These devices include a laser turbidimeter such as the Hach FilterTrac 660, a particle monitor, or a particle counter. Since membrane units are often backwashed many times each day, we normally require membrane plants to collect and record performance data at least once every 5 minutes instead of once every 15 minutes.

The monitoring and reporting requirements for membrane plants are complex. These systems must use a different SWMOR than systems with conventional plants. To be aware of the requirements, you should check this TCEQ Web page:

www.tceq.texas.gov/drinkingwater/swmor

ATTACHMENT 2.
DAM 1. EVALUATION FORM

(to be completed by plant staff who participated in the training activities)

Training location: _____ Date: _____

Instructor Name: _____

① Strongly Agree ② Agree ③ No Opinion ④ Disagree ⑤ Strongly Disagree

1. The agenda for this workshop accurately described the information being covered.	① ② ③ ④ ⑤
2. The information presented during the workshop was too technical or was too hard.	① ② ③ ④ ⑤
3. The information presented during the workshop was not technical enough.	① ② ③ ④ ⑤
4. The workshop covered too much information or the trainer went too fast.	① ② ③ ④ ⑤
5. The workshop covered too little information or the trainer went too slow.	① ② ③ ④ ⑤
6. The monitoring strategy developed during the workshop is useful.	① ② ③ ④ ⑤
7. The information on the Process Monitoring Form is understandable.	① ② ③ ④ ⑤
8. The training is <u>exactly</u> what we needed.	① ② ③ ④ ⑤
9. The training is valuable and will help us improve plant performance.	① ② ③ ④ ⑤
10. Our water system would be willing pay for this kind of training.	① ② ③ ④ ⑤

Questionnaire continues on the back

EVALUATION FORM, CONTINUED

Specific Suggestions:

What could we change in the agenda to improve it?

What did we not explain well enough for you to understand?

What areas did we spend too much time on?

What areas did we spend too little time on?

What are some other issues where you feel more training is needed?

What other comments or suggestions do you have?

Revision table

Date	Action	Comment
January 21, 2003	Created	Version 1
April 28, 2003	Revised	Add a Materials List
December 20, 2007	Revised	Minor revisions and formatting
April 1, 2013	Revised	Make MS Word file from WordPerfect file
August 24, 2019	Revised	Revised to meet TCEQ accessibility standards

Thanks for participating in this Directed Assistance Module (DAM)