DIRECTED ASSISTANCE MODULE 12 (DAM 12):

How to Develop and Manage an Effective Cross-Connection Control Program (CCCP)

STUDENT GUIDE

Prepared by:
Texas Commission on Environmental Quality (TCEQ)
Texas Optimization Program (TOP) Core Team

Latest revision date: August 24, 2019

Table of Contents

DEFINITIONS IX

ACRONYMS AND ABBREVIATIONS XIII

COURSE OVERVIEW AND OBJECTIVES 1

Preparation 2
Agenda 4
Helpful regulatory and technical resources: 5

SECTION 1: THE BASICS —HAZARDS AND ASSEMBLIES 7

Section 1—Learning objectives 7
What is a cross-connection? 7
Considering the hazards 13
Backflow preventers 17
Types of backflow preventers 17
Understanding how to select the right device 35
Section 1—Activities 37

SECTION 2: DESIGNING A PROGRAM THAT FITS 43

Section 2—Learning objectives 43
Elements to establish an effective program 43
Key elements 45
Types of CCCPs 45
Internal CCCP: 45
Containment: 47
Comprehensive CCCP: 52
Multiple-authority joint CCCP: 53
Section 2—Activities 55

SECTION 3: INVOLVING STAKEHOLDERS: "THE 3 C'S" 57

Section 3—Learning objectives 57
Purpose of stakeholder involvement ('who?') 57
Communication, coordination and cooperation 58
Internal stakeholders: Who should be on the CCCP? 59
Roles and responsibilities 59
Potential CCCP members 61
External communication: Communication with Customers: 64
Section 3—Activities 66
Organization Chart Workshop 66
Exercise: External stakeholders 69
Exercise: Setting up meetings 69

SECTION 4: ESTABLISHING ENFORCEMENT AUTHORITY 71
Section 4—Learning objectives 71
Appropriate authority 71
A Code is not the same as an Ordinance 73
Local plumbing ordinance or plumbing regulations: 74
Plumbing codes: 80
Retail Service Agreements: 81
Sanitary Control 86
Section 4—Activities 88
SECTION 5: CUSTOMER SERVICE INSPECTIONS 91
Section 5—Learning objectives 91
Basics of Customer Service Inspections 91
Timing for CSIs 92
Credentials for performing CSIs 93
Critical elements of CSIs 94
RG 206 CSIs: A Guide for PWSs 95
Section 5—Activities 109
Section 5 Review Questions 111
SECTION 6: DEVELOPING AND IMPLEMENTING A BACKFLOW INCIDENT ACTION PLAN 113
Section 6—Learning objectives 113
Purpose of a backflow-incident response plan 113
Developing the plan—a team effort 114
Elements of a plan 114
TCEQ RG 477 – A PWS Guide to Preparing a Backflow-Incident Emergency-Response Plan 117
Implementing the plan 128
TCEQ RG 476–A PWS Guide to Responding to a Backflow Incident 135
Section 6—Activities 142
SECTION 7: CERTIFICATIONS, LICENSING, AND TESTING 145
Section 7—Learning objectives 145
Customer Service Inspection (CSI) licensing 146
Backflow prevention assembly installation: 146
Installation flowchart 146
Backflow prevention assembly testing: 148
Non-potable test gauges 151
Fees and payment for backflow prevention assembly testing 151
Section 7—Activities 153

SECTION 8: MANAGING, BUDGETING, AND RECORDKEEPING **157**
Section 8—Learning objectives 157
Managing and budgeting 157
Recordkeeping 158
Documentation 159
Section 8—Activities 162
WORKS CITED **164**
ATTACHMENTS **165**
Attachment 1—Rule Language 165
Attachment 2—Flushing programs 187
Attachment 3—DAM 12 Pre-Test 191
Attachment 4—DAM 12 Post-Test 193
Attachment 5—DAM 12 Section Priority Form 195
Attachment 6—DAM 12 Course Evaluation 197
Attachment 7—DAM 12 Follow-Up Form 199

List of Figures:

Figure 1: Diagram of backpressure cross-connection 9
Figure 2: Diagram of backsiphonage cross-connection from EPA cross-connection control manual (EPA-CCCM) 9
Figure 3: EPA backsiphonage case study from EPA-CCCM 11
Figure 4: EPA backpressure case study from EPA-CCCM 13
Figure 5: List of hazards for premises isolation [§290.47(f)] 15
Figure 6: List of hazards for internal protection [§290.47(f)] 16
Figure 7: Air gap (AG) from EPA EPA-CCCM 18
Figure 8: AG piping from EPA-CCCM 18
Figure 9: Photograph of AG 19
Figure 10: Atmospheric vacuum breaker (AVB) from EPA-CCCM 19
Figure 11: Photograph of an AVB 20
Figure 12: AVB installation arrangement from EPA-CCCM 20
Figure 13: Small pressure vacuum breaker (PVB) from EPA-CCCM 21
Figure 14: Large PVB from EPA-CCCM 22
Figure 15: Photograph of a small PVB 22
Figure 16: Spill resistant vacuum breaker (SVB) from the USC Manual of Cross-connection Control 23
Figure 17: Photograph of SVB 23
Figure 18: Double check valve assembly (DCVA) from EPA-CCCM 25
Figure 19: Photograph of a DCVA 26
Figure 20: Double check detector check from EPA-CCCM 27
Figure 21: Photograph of a double check detector check 27
Figure 22: Reduced pressure zone backflow assembly (RPBA) from EPA-CCCM 30
Figure 23: Diagram showing the principle operation for a RPBA from EPA-CCCM 31
Figure 24: Small RPBA devices from EPA-CCCM 32
Figure 25: Photograph of a large RPBA 32
Figure 26: Photograph of a small RPBA 33

Figure 27: Hosebibb vacuum breaker from EPA-CCCM 34
Figure 28: Photograph of a hosebibb vacumm breaker 34
Figure 29: Residential dual check cutaway from EPA-CCCM 28
Figure 30: Residential dual check installations from EPA-CCCM 29
Figure 31: Photograph of a residential dual check 29
Figure 32: Communication Cooperation and Coordination Stool Diagram 58
Figure 33: CSI keystone principal graphic 60
Figure 34: Plumbing ordinance template RG-478 Appendix I 80
Figure 35: Retail service agreement template RG-195 Appendix B 85
Figure 36: RG-206 CSIs A guide for PWSs 107
Figure 37: CSI template form 108
Figure 38: TCEQ RG 477 – A PWSs Guide to Preparing a Backflow-Incident Emergency-Response Plan 127
Figure 39: TCEQ RG 476–A PWS Guide to Responding to a Backflow Incident 141
Figure 40: RG-278 flow chart (Can I install a backflow prevention assembly?) 147
Figure 41: Backflow prevention assembly test and maintenance report (T&R) 150

List of Workshops

Workshop 1-Yellow pages workshop excercise: 37
Workshop 2: Stakeholder workshop exercise 66
Workshop 3: CSI workshop exercise 109
Workshop 4: License search workshop exercise 153

Definitions

This is not an exhaustive list of definitions but includes a variety that are used in the context of discussing cross-connection control programs (CCCPs).
Official TCEQ definitions are contained in the TCEQ rules under §290.38 and §290.103. Should any apparent discrepancy exist between these definitions and the rules, the rules shall apply.

Air gap—The unobstructed vertical distance through the free atmosphere between the lowest opening from any pipe or faucet conveying water to a tank, fixture, receptor, sink, or other assembly and the flood level rim of the receptacle. The vertical, physical separation must be at least twice the diameter of the water supply outlet, but never less than 1.0 inch.

Backflow—The undesirable reversal of flow in a potable water system.

- **Backpressure—**A pressure higher than the supply pressure caused by a pump, elevated tank, boiler, air, steam, or any other means that would cause backflow.
- **Backsiphonage—**Reduced or negative pressure in the supply piping.

Contamination—The presence of any foreign substance (organic, inorganic, radiological or biological) in water which tends to degrade its quality so as to constitute a health hazard or impair the usefulness of the water.

Cross Connection—A physical connection between a public water system (PWS) and either another supply of unknown or questionable quality, any source which may contain contaminating or polluting substances, or any source of water treated to a lesser degree in the treatment process.

Customer Service Inspection—An examination of water distribution facilities, like houses or other buildings, for identification and prevention of cross-connections, potential contaminant hazards, and illegal lead materials. If hazards are found in a CSI, water service may be denied.

Customer Service Inspector (CSI)—An individual who has completed a TCEQ-approved course, passed the exam, and holds current professional license as a customer service inspector.

Disinfection—A process which inactivates (kills or sterilizes) pathogenic organisms in the water by chemical oxidants or equivalent agents, for example—ultraviolet light.

Distribution system—A system of pipes that conveys potable water from a treatment plant to the consumers. The term includes pump stations, ground and elevated storage tanks, potable water mains, and potable water service lines and all associated valves, fittings, and meters, but excludes potable water customer service lines.

Drinking water—All water distributed by any agency or individual, public or private, for the purpose of human consumption or which may be used in the preparation of foods or beverages or for the cleaning of any utensil or article used in the course of preparation or consumption of food or beverages for human beings. The term "Drinking Water" shall also include all water supplied for human consumption or used by any institution catering to the public.

Drinking water standards—The TCEQ rules covering drinking water standards in Subchapter F of 30 TAC Chapter 290, relating to Drinking Water Standards Governing Drinking Water Quality and Reporting Requirements for PWSs.

Health hazard—A cross connection involving a substance that once introduced into the potable water supply, causes illness or death, spreads disease, or has a high probability of causing these effects.

Human consumption—Uses by humans in which water can be ingested into or absorbed by the human body. Examples of these uses include, but are not limited to drinking, cooking, brushing teeth, bathing, washing hands, washing dishes, and preparing foods.

Non-health hazard: A cross connection involving a substance that backflows into the potable water supply and makes the water look, smell, taste, or feel unusual, but will not harm you.

Plumbing inspector—Any person employed by a political subdivision for the purpose of inspecting plumbing work and installations in connection with health and safety laws and ordinances, who has no financial or advisory interest in any plumbing company, and who has successfully fulfilled the examinations and requirements of the Texas State Board of Plumbing Examiners.

Plumbing ordinance—A set of rules governing plumbing practices which is at least as stringent and comprehensive as one of the following nationally recognized codes:

- International Plumbing Code; or
- Uniform Plumbing Code

Potable water customer service line—The sections of potable water pipe between the customer's meter and the customer's point of use.

Potable water service line—Section of pipe between the potable water main and the customer's side of the water meter. In cases where no customer water meter exists, it is the section of pipe that is under the ownership and control of the PWS.

Potable water main—A pipe or enclosed constructed conveyance operated by a PWS which is used for the transmission or distribution of drinking water to a potable water service line.

Potential contamination hazard—A condition which, by its location, piping or configuration, has a reasonable probability of being used incorrectly, through carelessness, ignorance, or negligence, to create or cause to be created a backflow condition by which contamination can be introduced into the water supply. Examples of potential contamination hazards are:

- bypass arrangements;
- jumper connections;
- removable sections or spools; and
- swivel or changeover assemblies.

Public water system (PWS)—A system for the provision to the public of water for human consumption through pipes or other constructed conveyances, which includes all uses described under the definition for drinking water. An entity that serves at least 25 individuals or 15 potential connections for at least 60 days a year meets the definition of a public water system, unless it receives water from a public water system, does not sell water, and is under the sanitary control of a registered and regulated by the TCEQ. A public water system may include any combination of sources, treatment, storage, and distribution facilities. Without excluding other meanings of the terms "individual" or "served," an individual shall be deemed to be served by a water system if he lives in, uses as his place of employment, or works in a place to which drinking water is supplied from the system.

Service line—A pipe connecting the utility service provider's main and the water meter, or for wastewater, connecting the main and the point at which the customer's service line is connected, generally at the customer's property line.

Acronyms and Abbreviations

This is not an exhaustive list of acronyms and abbreviations, but includes jargon used in the context of discussing CCCPs

AG	Air gap
BPAT	Backflow prevention assembly test ***or*** backflow prevention assembly tester
CCCP	Cross-Connection Control Program
CSI	Customer Service Inspection ***or*** Customer Service Inspector
DAM	Directed Assistance Module
DWW	Drinking Water Watch (dww2.tceq.texas.gov/DWW/)
FMT	Financial, Managerial, and Technical
PWS	Public water system
RPZ	Reduced pressure zone
RPBA	Reduced pressure backflow assembly
SDWIS	Safe Drinking Water Information System
SOP	Standard operating procedure
TCEQ	Texas Commission on Environmental Quality
TOP	Texas Optimization Program
TMI	Too much information
TRWA	Texas Rural Water Association

Directed Assistance Module (DAM) No. 12

How to Develop and Manage an Effective Cross-Connection Control Program (CCCP)

Course Overview and Objectives

The purpose of this Directed Assistance Module (DAM) is to help public water system (PWS) personnel to develop and manage an effective **Cross-Connection Control Program (CCCP)** as required by TCEQ regulations.

Prerequisites

This course has been developed to help PWS operators, managing officials, and administrative staff responsible for the development, management, and implementation of the CCCP. Any interested personnel should be encouraged to attend.

Although a person with at least general knowledge of backflow will find the material most accessible, a section reviewing the basics is included so that even staff with no backflow experience can benefit from the DAM.

Overview

At a minimum, the following elements are crucial to developing and managing an effective CCCP program:

1. The Basics: Hazards and Assemblies;
2. Designing a Program that Fits;
3. Involving Stakeholders through Communication, Coordination and Cooperation;
4. Establishing Enforcement Authority;
5. Customer Service Inspections;
6. Developing and Implementing an Incident Action Plan;
7. Certifications, Licensing and Testing; and
8. Budgeting, Managing and Recordkeeping.

Overall learning goals

The overall learning goals for this DAM are:

- Understand the importance of a CCCP to protect the health of drinking –water consumers;
- Be familiar with the key elements of developing and maintaining an effective, efficient CCCP,
- Be able to improve an existing CCCP or start to develop one, and
- Have a list of follow-up items to successfully make that happen.

In addition to these overall goals, each Section has specific learning objectives. Focusing on the learning objectives before starting a section will help you follow and remember the material.

Preparation

Supporting Documentation Needed:

When this DAM is presented to a PWS, before the training, PWS attendees should gather as much of the following information as is available:

- Copy of most up-to-date Retail Service Agreement;
- If municipal PWS, a copy of the City Ordinance related to the CCCP (Program and Enforcement Action Criteria);
- List of testable Backflow/Backpressure devices in the distribution system;
- List of customers with irrigation meters;
- List of facilities using re-use or re-claim water;
- List of industrial/commercial facilities connected to your system;
- List of PWSs connected to your system (used regularly or in emergencies);
- Copies of Customer Service Inspection (CSI) forms;
- Information related to the adoption of an adequate Plumbing Ordinance—if applicable; and
- Information related to individuals, departments or local authorities involved or responsible for implementing/enforcing your CCCP.

When this DAM is presented to a group of people such as engineers, operators, and regulators who are not affiliated with a single PWS, the instructor will provide examples of these documents.

Logistics:

This training is a desk-top exercise and should be conducted in a room or office that is clean, dry, and not too noisy.

Instructors are approved through the TCEQ's Occupational Licensing process described in RG 373. For any questions about the instructor approval process, contact the TCEQ at 512-239-1000.

Pre-Post Test:

This DAM includes a Pre and Post-Test intended to help the student's learning process. These tests will NOT be graded.

When you take the Pre-Test, note the questions that were puzzling.

The answers will be covered during the course. If not, make sure to ask about them. The questions in the test are intended to be related to important parts of the material covered.

If you have suggestions to improve the test, please provide those ideas in your course evaluation.

Section Priority Survey

Before starting for the day, fill out the Section Priority Survey and turn it in to the instructor. Discuss which sections need the greatest emphasis.

Evaluations:

A 'Course Evaluation Form' is included in this Student's Guide. You will have time to complete this evaluation and return it to the instructor at the end of the course. By submitting your input, the TCEQ can continue to improve the training we develop.

You may complete the course evaluation anonymously.

Agenda

Table 1 - DAM 12 Agenda

Start time	DAM Section or activity	
8:00	Introductions and Sign-In Section Priority Survey Pre-Test	(10 minutes) (5 minutes) (10 minutes)
8:25	**Presentation**	(20 minutes)
8:45	Break (5 minutes)	
8:50	**Section 1**—The Basics: Backflow, Hazards, Devices, and Case Studies Yellow Pages Workshop Exercise	 (60 minutes)
9:50	**Section 2**—Designing a Program that Fits	(40 minutes)
10:30	Break (10 minutes)	
10:40	**Section 3**—Involving Stakeholders: Communication, Coordination, and Cooperation Stakeholder Workshop Exercise	 (30 minutes)
11:10	**Section 4**—Establishing Enforcement Authority	(40 minutes)
11:50	Lunch (60 minutes)	
12:50	**Section 5**—Customer Service Inspections CSI Workshop Exercise	 (60 minutes)
1:50	**Section 6**—Developing and Implementing an Incident Action Plan Backflow Incident Workshop Activity	 (60 minutes)
2:50	Break (10 minutes)	
3:00	**Section 7**—Certifications, Licensing and Testing License Search Workshop Exercise	 (30 minutes)
3:30	**Section 8**—Managing, Budgeting and Recordkeeping	(40 minutes)
4:10	Break (10 minutes)	
4:20	Post-Test Discuss Post-Test answers Go over Follow-Up Forms Complete Course Evaluation Form	(10 minutes) (10 minutes) (10 minutes) (10 minutes)
5:00	Adjourn	

Helpful regulatory and technical resources:

Free resources:

TCEQ has Regulatory Guidance (RG) documents available for free on the internet *(at www.tceq.texas.gov/publications/search-pubs)*:

- RG-478 "Establishing and Managing an Effective Cross-Connection Control Program"
- RG-466 "Landscape Irrigation Program: Implementation"
- RG-476 "Public Water System Guide to Responding to a Backflow Incident"
- RG-477 "A Public Water System Guide to Preparing a Backflow-Incident Emergency-Response Plan"
- RG-206 "Customer Service Inspection: A Guide for PWSs"
- RG-345 "Backflow Protection on Fire Prevention Systems"
- TCEQ "Rules and Standards" Title 30 Texas Administrative Code (30 TAC) Chapter 290 Subchapter D & F, RG 195 and RG 346, respectively (applicable portions in Attachment 1 of this Student Guide).

The U.S. Environmental Protection Agency (EPA) has information for free on the internet
(at www.awwa.org/portals/0/files/education/elearning/ coursecontent/el219-usepacross-connectioncontrolmanual.pdf)

- EPA "Cross-Connection Control Manual," EPA 816-R-03-002,

Resources available for purchase:

There are many excellent resources available for purchase, for the enthusiastic student who wants more information. These include:

- AWWA M-14 Manual "**BACKFLOW PREVENTION AND CROSS-CONNECTION CONTROL: RECOMMENDED PRACTICES**"
- University of Southern California (USC) **"MANUAL OF CROSS-CONNECTION CONTROL"**

Notes

Section 1: The Basics —Hazards and Assemblies

This DAM is designed to help PWS staff who may have a range of knowledge about CCCPs. Some may be extremely experienced with cross-connection control, others may be new to the topic. Section 1 provides a basic review—or introduction—to the fundamental concepts needed to understand and develop a CCCP.

A refresher may be handy even for the most experienced people.

Section 1—Learning objectives

Learning goals for this section are related to the basic, underlying principles of backflow and CCCPs:

- Review or learn what a cross connection is and learn the two hydraulic ways that cross connection can occur;
- Understand hazards and be able to list potential health and non-health hazards;
- Be familiar with the range of backflow preventers used as part of CCCPs and understand which types of cross connection they can protect against; and
- Understand the public health importance of backflow events.

What is a cross-connection?

A **cross-connection** is a physical connection between a PWS and either another supply of unknown or questionable quality, any source which may contain contaminating or polluting substances, or any source of water treated to a lesser degree in the treatment process.

Health risk from cross connections

What do you think causes the most waterborne disease outbreaks? Not too long ago, it was inadequately treated surface water. But since the 1990s, surface water treatment and regulation has made surface water much safer. Now, the Centers for Disease Control (CDC) report that

inadequately treated ground water and backflow events cause the most waterborne disease outbreaks.

Even more worrisome, the EPA estimates that only a fraction of the waterborne disease outbreaks from backflow events are reports. More frequently, a person feels sick and says, "I must have eaten something that did not agree with me." Has this ever happened to you?

Health and non-health hazards

The hazards resulting from cross-connections are categorized as either:

- Non-health hazard, or
- Health hazard.

Non-health hazard is a cross-connection, potential contamination hazard, or other situation involving any substance that generally will be a nuisance but not be a health hazard if introduced into the water—like causing bad taste or odor.

Health hazard is a cross-connection, potential contamination hazard, or other situation involving any substance that can cause death, illness, spread of disease, or has a high probability of causing such effects if introduced into drinking water.

High versus low health hazards

Historically, health-hazards were defined as '**high' or 'low'** health hazards, but that terminology is no longer used. The problem was that when someone said "low health hazard," people tended to assume it meant "NO health hazard," and that is wrong.

Now, we just recognize that some contaminant is a health hazard. It is necessary to investigate each specific hazard to determine just how bad the risk is.

Backpressure and backsiphonage

There are two hydraulic ways backflow events may occur:

- Backpressure, or
- Backsiphonage.

Backpressure: A pressure higher than the supply pressure caused by a pump, elevated tank, boiler, air, steam, or any other means that has the potential to cause backflow.

<u>Backsiphonage</u>: Reduced or negative pressure in the supply piping. Backsiphonage occurs when system pressure is reduced below atmospheric pressure. The effect is similar to sipping water through a straw.

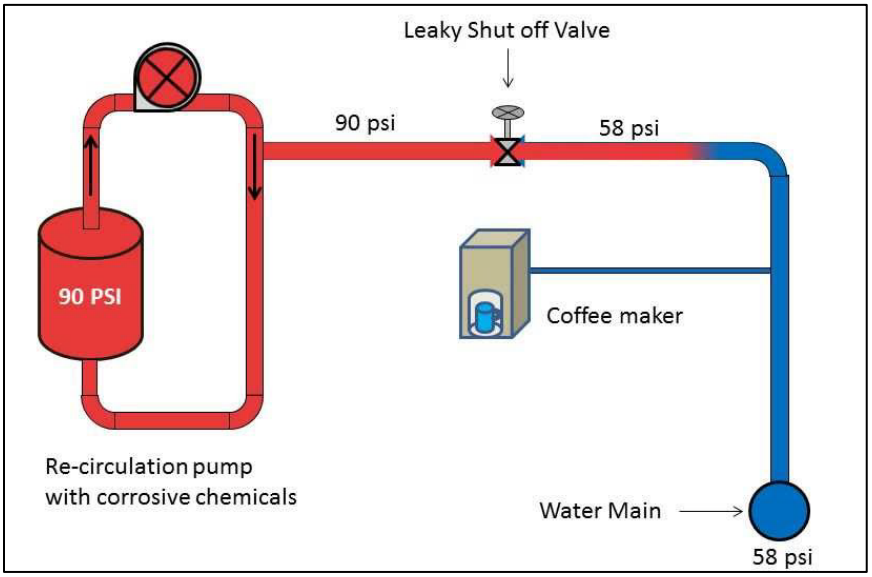

Figure 1: Diagram of backpressure cross-connection

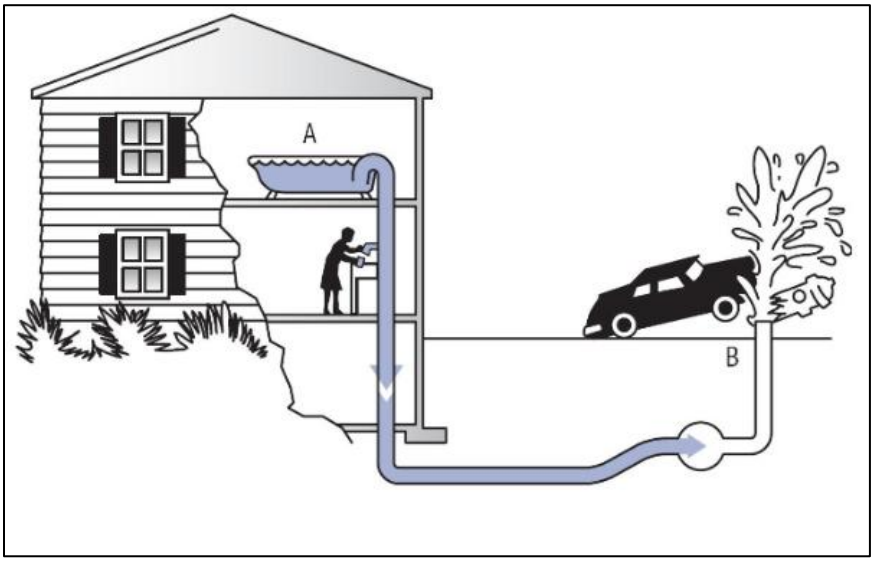

Figure 2: Diagram of backsiphonage cross-connection (from EPA cross-connection control manual (EPA-CCCM)).

<u>EPA case studies—backsiphonage</u>

There are numerous stories of backflow events. DAM participants may wish to share their stories.

Here is an example that the EPA includes in their manual.

EPA backsiphonage example: Burned in the shower

A resident of a small town in Alabama, jumped in the shower at 5 a.m. one morning in October 1986, and when he got out his body was covered with tiny blisters. "The more I rubbed it, the worse it got," the 60-year-old resident said. "It looked like someone took a blow torch and singed me."

He and several other residents received medical treatment at the emergency room of the local hospital after the water system was contaminated with sodium hydroxide, a strong caustic solution.

Other residents claimed that, "It (the water) bubbled up and looked like Alka Seltzer. I stuck my hand under the faucet and some blisters came up."

One neighbor's head was covered with blisters after she washed her hair and others complained of burned throats or mouths after drinking the water.

The incident began after an 8-inch water main, that fed the town, broke and was repaired. While repairing the water main, one workman suffered leg burns from a chemical in the water and required medical treatment. Measurements of the pH of the water were as high as 13 in some sections of the pipe.

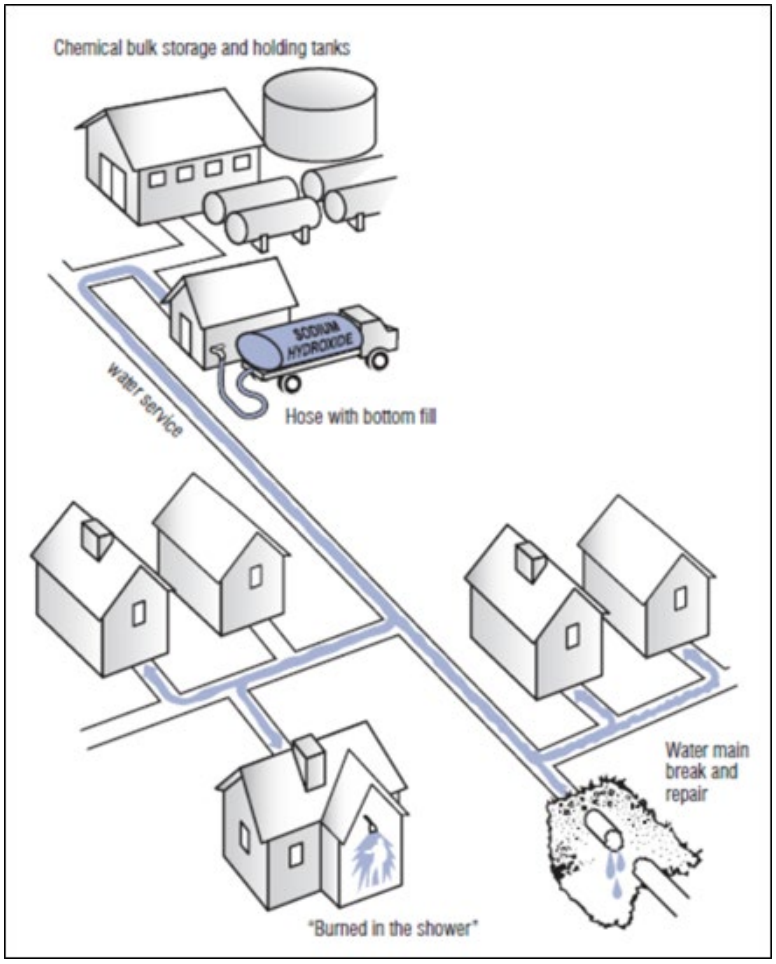

Investigation into the cause of the problem led to a possible source of the contamination from a nearby chemical company that distributes chemicals such as sodium hydroxide.

The sodium hydroxide is brought to the plant in liquid form in bulk tanker trucks and is transferred to a holding tank and then pumped into 55-gallon drums.

When the water main broke, a truck driver was adding the water from the bottom of the tank truck instead of the top, and sodium hydroxide backsiphoned into the water main.

Figure 3: EPA backsiphonage case study (from EPA-CCCM).

EPA case studies—backpressure

There are numerous stories of backflow events. DAM participants may wish to share their stories.

Here is an example that the EPA includes in their manual.

EPA Backpressure example: East coast shipyard

Water fountains at an East Coast Shipyard were posted "No Drinking" as workers flushed the water lines to eliminate raw river water that had entered the shipyard following contamination from incorrectly connected water lines between ships at the pier and the shipyard.

Some third shift employees drank the water before the pollution was discovered and later complained of stomach cramps and diarrhea.

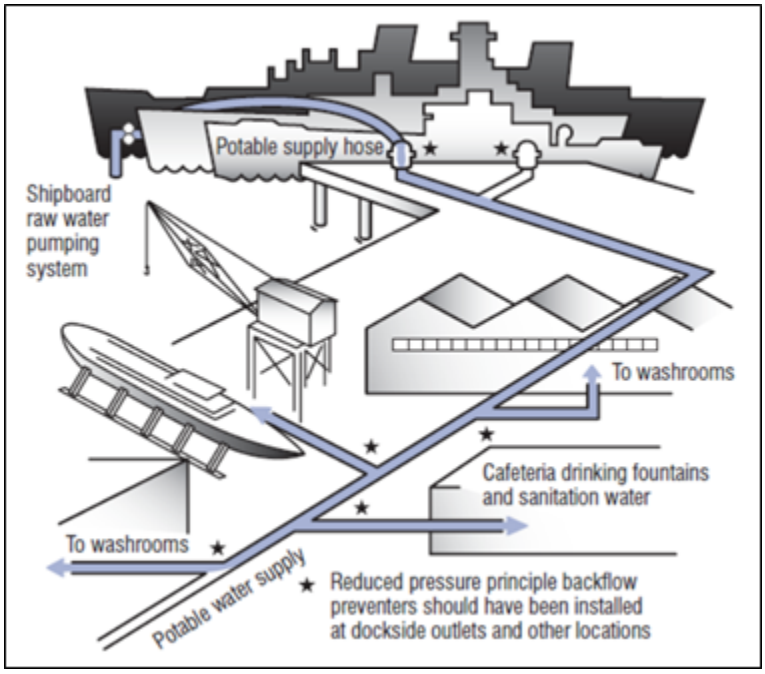

The cause of the problem was a direct cross-connection between the on-board salt water fire protection water system and the fresh water connected to one of the ships at the dock.

While the shipyard had been aware of the need for backflow protection at the dockside tie up area, the device had not been delivered and installed prior to the time of the incident.

As a result, the salt water on-board fire protection system, being at a greater pressure than the potable supply, forced the salt water, through backpressure, into the shipyard potable supply.

Fortunately, a small demand for potable water at the time of the incident prevented widespread pollution in the shipyard and the surrounding areas.

Figure 4: EPA backpressure case study (from EPA-CCCM).

Considering the hazards

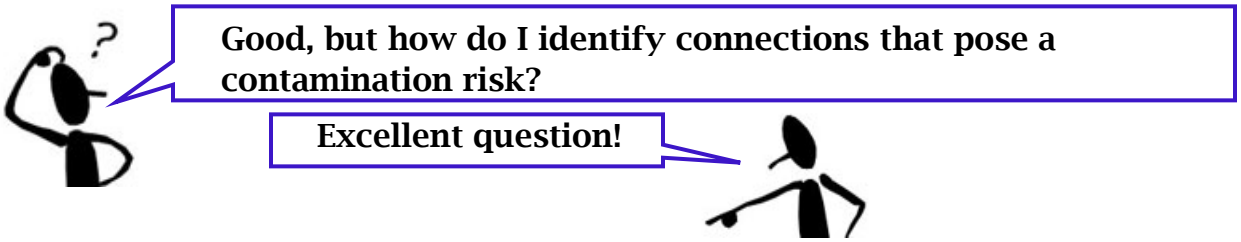

The TCEQ has developed a table in 30 TAC §290.47(f) identifying cross-connection hazards commonly found in PWSs. This table is shown in Figures 5 and 6. Figure 5 shows the hazards and backflow prevention devices associated with containment (isolation of the hazard to just the building) and Figure 6 shows the hazards and devices used as part of internal programs on a campus or building that is not defined as a PWS.

§290.47(f) Appendix F does not include every possible hazard. Your water system may have potential contamination hazards that are not listed in the table.

Other helpful lists of hazards are available. The EPA's "**Cross-Connection Control Manual**", the AWWA's "**Backflow Prevention and Cross-Connection Control—Recommended Practices,**" and USC's "**Manual of Cross-Connection Control**" should also be used to gain a better understanding of the potential hazards in your water system.

Is it a hazard?

When you think about activities that are in the list of hazards, you may not be able to determine the level of risk without learning more about the specific building or business.

For example, a dry-cleaning shop that just accepts dirty clothes and sends them out for cleaning elsewhere. However, a dry-cleaning shop that actually performs the cleaning may have drums of dry-cleaning chemicals on-site. Clearly, there is a big difference in the risk.

Another example is a dentist's office. Historically, dentist's offices were always at risk of cross-connection with spit cups, which would be a very

great risk. Nowadays, more modern dentist's offices have self-contained dental chairs that don't connect with the potable water plumbing. Is that a greater or lesser risk? *(It is a lesser risk.)*

For this reason: Consider the hazards

Officials responsible for developing the CCCP should consider the types of hazards present in their distribution systems prior to adopting a plumbing ordinance, plumbing regulations, or service agreement. This will allow for the development of a program that provides the highest level of public health protection.

The TCEQ rules refer to the hazards listed in Figures 5 and 6. These rules are intended to help water systems protect against the risks. In the block below, the rule language about protecting against risks is shown.

The Rule:

§290.46(j)(2) states:

> *"As potential contamination hazards are discovered, they shall be promptly eliminated to prevent possible contamination of the water supplied by the public water system.*
>
> *The existence of a health hazard, as identified in 290.47(i) of this title, shall be considered sufficient grounds for immediate termination of water service.*
>
> *Service can be restored only when the health hazard no longer exists, or until the health hazard has been isolated from the public water system in accordance with 290.44(h) of this title."*

§290.47(f) Appendix F. Assessment of Hazard and Selection of Assemblies

The following table lists many common hazards. It is not an all-inclusive list of the hazards which may be found connected to public water systems.

Premises Isolation: Description of Premises	**Assessment of Hazard**	**Required Assembly**
Aircraft and missile plants	Health	RPBA or AG
Animal feedlots	Health	RPBA or AG
Automotive plants	Health	RPBA or AG
Breweries	Health	RPBA or AG
Canneries, packing houses and rendering plants	Health	RPBA or AG
Commercial car wash facilities	Health	RPBA or AG
Commercial laundries	Health	RPBA or AG
Cold storage facilities	Health	RPBA or AG
Connection to sewer pipe	Health	AG
Dairies	Health	RPBA or AG
Docks and dockside facilities	Health	RPBA or AG
Dye works	Health	RPBA or AG
Food and beverage processing plants	Health	RPBA or AG
Hospitals, morgues, mortuaries, medical clinics, dental clinics, veterinary clinics, autopsy facilities, sanitariums, and medical labs	Health	RPBA or AG
Metal manufacturing, cleaning, processing, and fabrication plants	Health	RPBA or AG
Microchip fabrication facilities	Health	RPBA or AG
Paper and paper products plants	Health	RPBA or AG
Petroleum processing or storage facilities	Health	RPBA or AG
Photo and film processing labs	Health	RPBA or AG
Plants using radioactive material	Health	RPBA or AG
Plating or chemical plants	Health	RPBA or AG
Pleasure-boat marinas	Health	RPBA or AG
Private/Individual/Unmonitored Wells	Health	RPBA or AG
Rainwater harvesting system	Health	RPBA or AG
Reclaimed water systems	Health	RPBA or AG
Restricted, classified or other closed facilities	Health	RPBA or AG
Rubber plants	Health	RPBA or AG
Sewage lift stations	Health	RPBA or AG
Sewage treatment plants	Health	RPBA or AG
Slaughter houses	Health	RPBA or AG
Steam plants	Health	RPBA or AG
Tall buildings or elevation differences where the highest outlet is 80 feet or more above the meter	Nonhealth	DCVA

Figure 5: List of hazards for premises isolation [§290.47(f)]

Internal Protection: Description of Cross Connection	Assessment of Hazard	Required Assembly
Aspirators	Nonhealth†	AVB
Aspirator (medical)	Health	AVB or PVB
Autoclaves	Health	RPBA
Autopsy and mortuary equipment	Health	AVB or PVB
Bedpan washers	Health	AVB or PVB
Connection to industrial fluid systems	Health	RPBA
Connection to plating tanks	Health	RPBA
Connection to salt-water cooling systems	Health	RPBA
Connection to sewer pipe	Health	AG
Cooling towers with chemical additives	Health	AG
Cuspidors	Health	AVB or PVB
Degreasing equipment	Nonhealth†	DCVA
Domestic space-heating boiler	Nonhealth†	RPBA
Dye vats or machines	Health	RPBA
Fire-fighting system (toxic liquid foam concentrates)	Health	RPBA
Flexible shower heads	Nonhealth†	AVB or PVB
Heating equipment		
Commercial	Nonhealth†	RPBA
Domestic	Nonhealth†	DCVA
Hose bibbs	Nonhealth†	AVB
Irrigation systems		
with chemical additives	Health	RPBA
without chemical additives	Nonhealth†	DCVA, AVB,or PVB
Kitchen equipment—Commercial	Nonhealth†	AVB
Lab bench equipment	Health or Nonhealth†	AVB or PVB
Ornamental fountains	Health	AVB or PVB
Swimming pools		
Private	Nonhealth†	PVB or AG
Public	Nonhealth†	RPBA or AG
Sewage pump	Health	AG
Sewage ejectors	Health	AG
Shampoo basins	Nonhealth†	AVB
Specimen tanks	Health	AVB or PVB
Steam generators	Nonhealth†	RPBA
Steam tables	Nonhealth†	AVB
Sterilizers	Health	RPBA
Tank vats or other vessels containing toxic substances	Health	RPBA
Trap primers	Health	AG
Vending machines	Nonhealth†	RPBA or PVB
Watering troughs	Health	AG or PVB

NOTE: AG = air gap; AVB = atmospheric vacuum breaker; DCVA = double check valve backflow prevention assembly; PVB = pressure vacuum breaker; RPBA = reduced-pressure principle backflow prevention assembly

- AVBs and PVBs may be used to isolate health hazards under certain conditions, that is, backsiphonage situations. Additional area of premises isolation may be required.

† Where a greater hazard exists (due to toxicity or other potential health impact) additional area protection with RPBAs is required.

Figure 6: List of hazards for internal protection [§290.47(f), continued]

Backflow preventers

Once the potential hazard(s) have been identified, the PWS will then need to decide which backflow prevention assembly is appropriate for the situation.

Types of backflow preventers

The types of backflow prevention assemblies that are commonly used in Texas are:

- Air gap (**AG**)
- Atmospheric vacuum breaker (**AVB**)
- Pressure vacuum breaker (**PVB**)
- Spill resistant vacuum breaker (**SVB**)
- Reduced pressure assembly (**RP**), reduced-pressure-zone assembly (**RPZ**), and reduced pressure backflow assembly (**RPBA**)

Other common devices are:

- Double check valve assembly (**DCVA**)
- Double check detector assembly (**DCD**)

In addition, there are some types of backflow prevention assemblies that may be used by homeowners, like:

- Residential dual checks (**RDC**)
- Hose-bibb vacuum breakers (**HBVB**).

Pictures and a discussion of each of these types are shown below.

Air gap (AG)

An air gap (AG) protects against backflow and backsiphonage. This is common. For example, there always is gap between the faucet and the top of the sink. Figure 7 shows a schematic of an air gap, and Figure 8 and 9 show photos.

Air gaps are not testable—but they are inspect-able. Looking at the outlet, you can easily see if a hose has been attached to a faucet and left in the sink—an obvious cross connection. How might you 'test' an air gap? *(If you can't fit your hand between top and bottom, it is no good.)*

An air gap, although an extremely effective backflow preventer when used to prevent backsiphonage and backpressure conditions, does

interrupt the piping flow with corresponding loss of pressure for subsequent use.

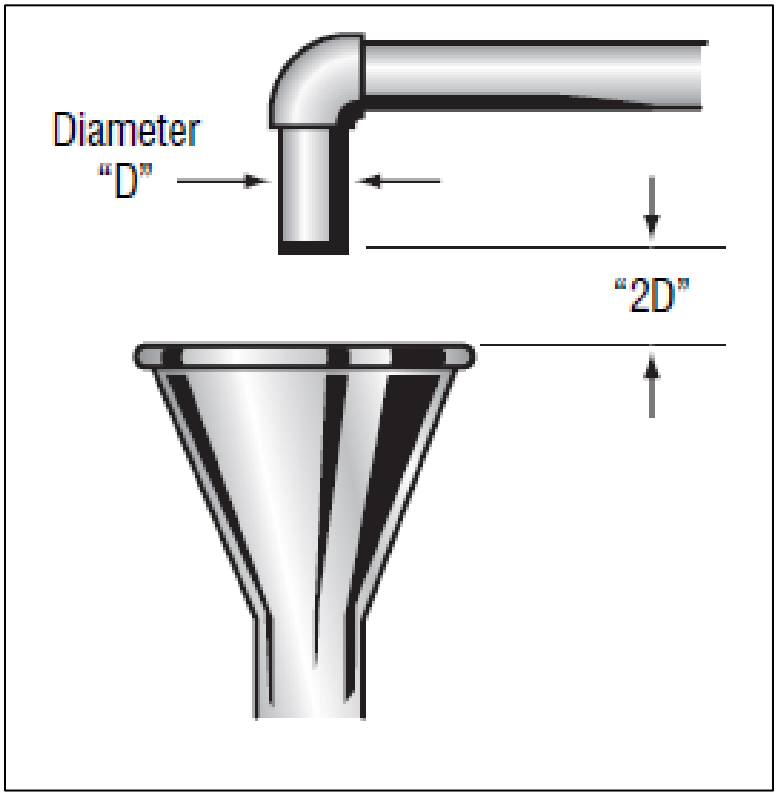

Figure 7: Air gap (from EPA-CCCM).

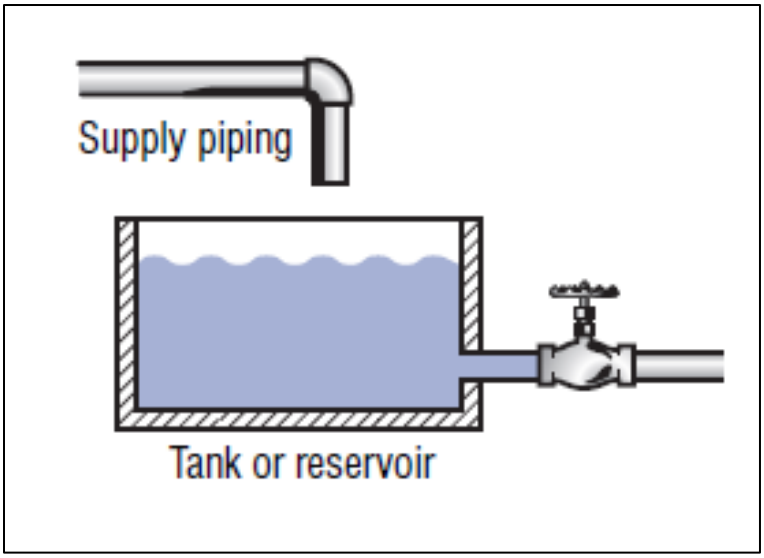

Figure 8: Air gap piping (from EPA-CCCM).

Figure 9: Photograph of air gap (AG).

Atmospheric vacuum breaker (AVB)

AVBs protect against backsiphonage but not backpressure. Figure 10 shows a schematic of an AVB, Figure 11 shows a photo, and Figure 12 shows a schematic of AVB installation.

They are not testable, but they can be inspected

These devices are simple and inexpensive.

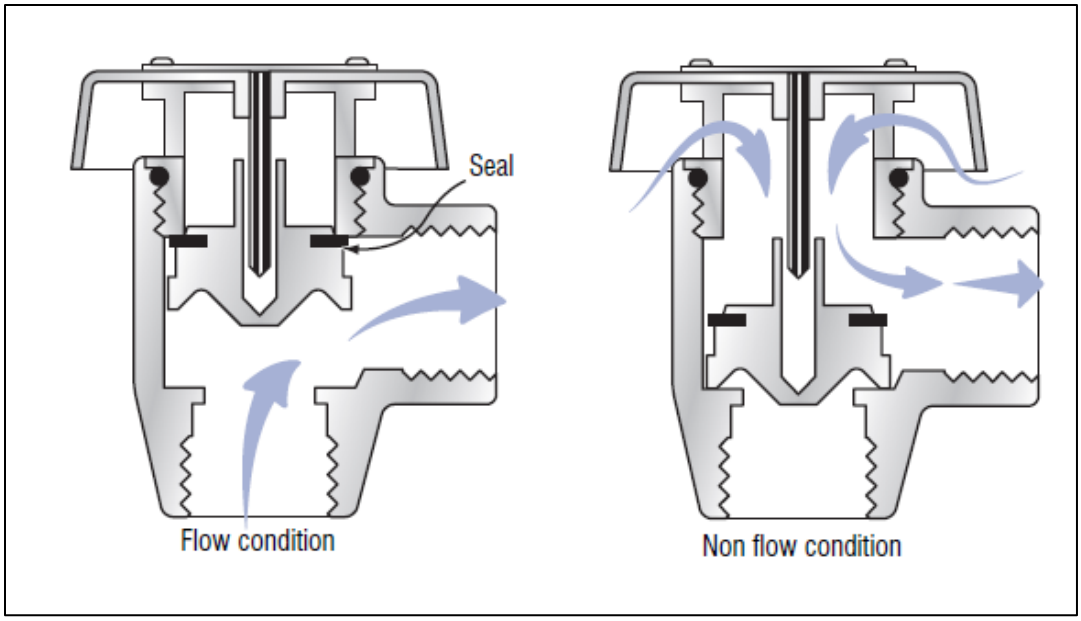

Figure 10: Atmospheric vacuum breaker (AVB) (from EPA-CCCM).

Figure 11: Photograph of an AVB.

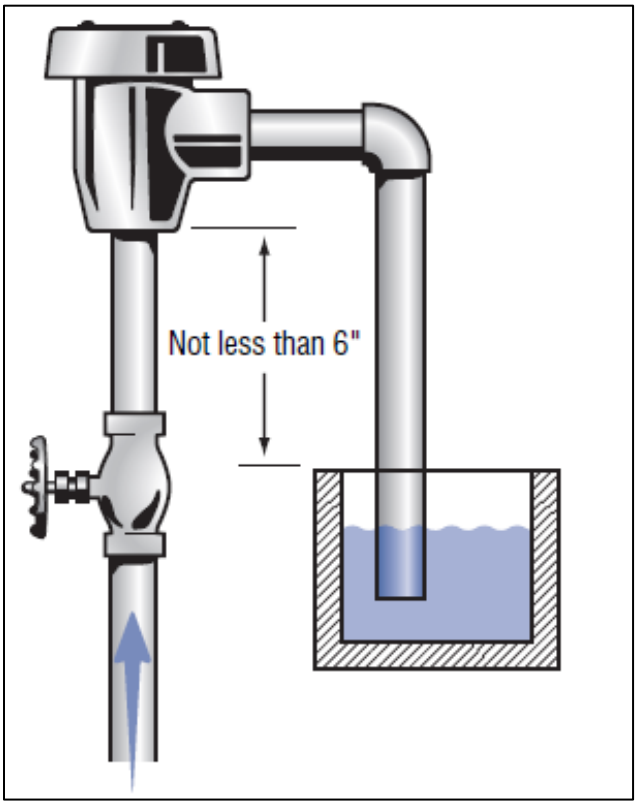

Figure 12: AVB installation arrangement (from EPA-CCCM).

Pressure vacuum breaker (PVB)

PVBs can protect against backsiphonage but not backpressure. They are testable.

This device is a high-tech AVB. It was designed in response to a need to have an AVB that could be used under constant pressure and that could be tested in line.

A spring on top of the disc and float assembly, two added gate valves, test cocks, and an additional first check are the modifications that make this work.

These are available in small and large sizes.

Figure 13 shows a schematic of a small PVB. Figure 14 shows a schematic of a large PVB. Figure 15 shows a photo of a small PVB.

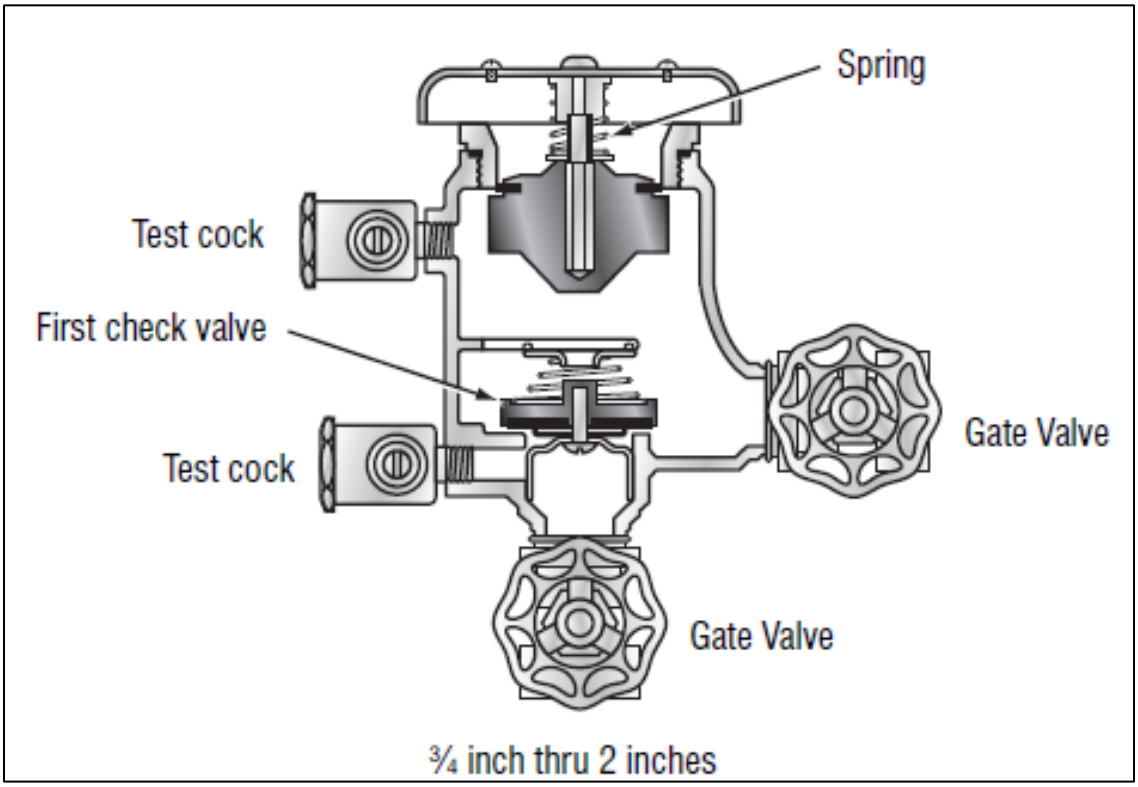

Figure 13: Small pressure vacuum breaker (PVB) (from EPA-CCCM).

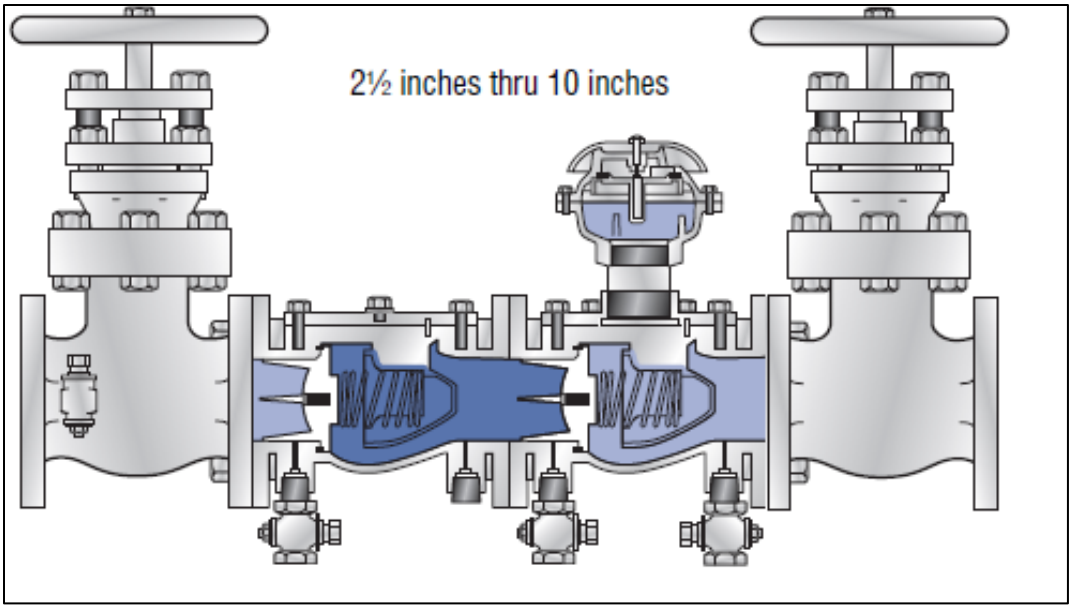

Figure 14: Large PVB (from EPA-CCCM).

Figure 15: Photograph of a small PVB.

Spill-resistant vacuum breaker (SVB)

A spill resistant pressure vacuum breaker (SVB) is a modification of the standard pressure vacuum breaker specifically designed to minimize how much water may be spilled. These devices are recommended for internal use.

The general installation and hydraulic requirements are similar to the standard pressure vacuum breaker.

Figure 16 shows a schematic of a SVB and Figure 17 shows a photo.

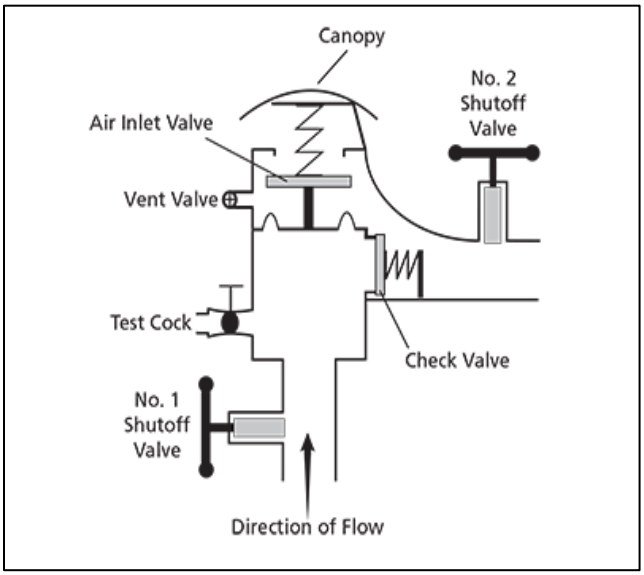

Figure 16: Spill resistant vacuum breaker (SVB) (from the USC Manual of Cross-connection Control).

Figure 17: Photograph of SVB.

Double and dual check valves and assemblies

It can be confusing to talk about double check valves, double check valve assemblies, and dual check valves because the names sound alike. There are important differences.

A **double check valve assembly** (DC/DCA/DCVA) is two single check valves coupled within one body and furnished with four test cocks and two tightly closing gate valves. A true double check valve assembly is a testable device, and is acceptable for backflow prevention on non-health hazard application.

A **double-check detector assembly** (DCDA) is a DCVA generally used on fire lines and has a testable by-pass DC.

Dual checks are two independent single checks plumbed in series, these are not testable and do not meet TCEQ's definition of a backflow preventer. Some people may refer to them as double checks, but that is not accurate. A device must be testable to protect against any hazard, health or non-health. Essentially if the name doesn't end in "assembly", it is not considered a testable device.

Double check valve assemblies. (DCVA)

Double-check valve assemblies (DCVAs) are testable. Each check is spring loaded closed and requires approximately a pound of pressure to open. This allows the valve to seat even in the presence of small debris.

Double-check valve assemblies protect against both backpressure and backsiphonage.

Figures 18 and 19 below show a double check valve assembly schematic and photo, respectively.

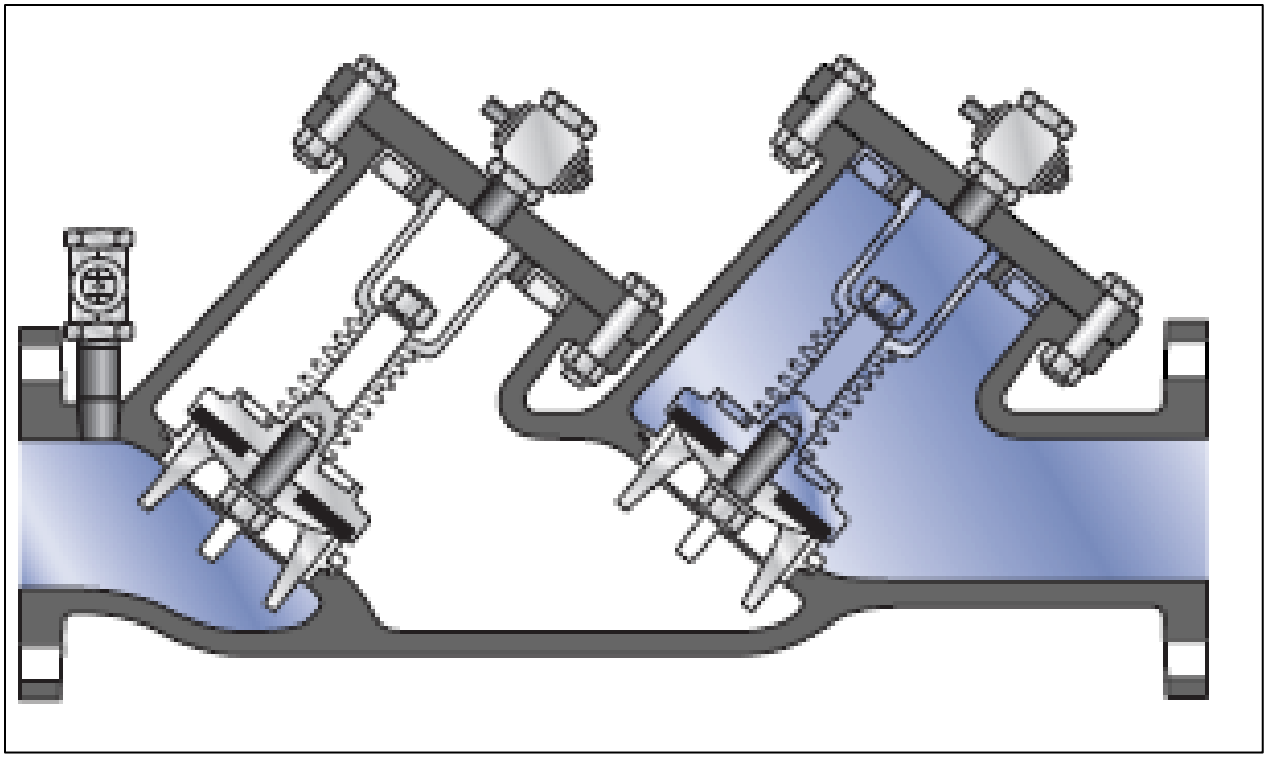

Figure 18: Double check valve assembly (DCVA) (from EPA-CCCM).

Figure 19: Photograph of a DCVA.

Double check detector check assembly (DCDA)

Double check detector check assemblies (DCDAs) mainly used in fire line installations to protect the potable supply line from fire line chemical additives, booster pump fire-line backpressure, and stagnant water that sits in fire lines for a long time.

DCDAs are testable.

DCDAs protect against both backpressure and backsiphonage.

Figures 20 shows a schematic of a DCDA and Figure 21 shows a photograph.

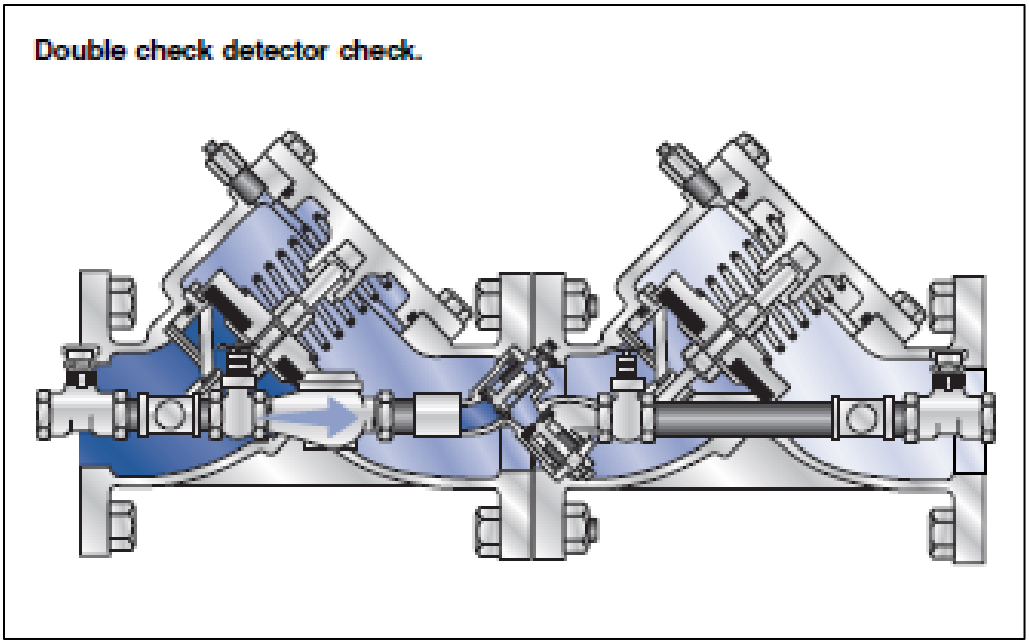

Figure 20: Double check detector check from EPA-CCCM.

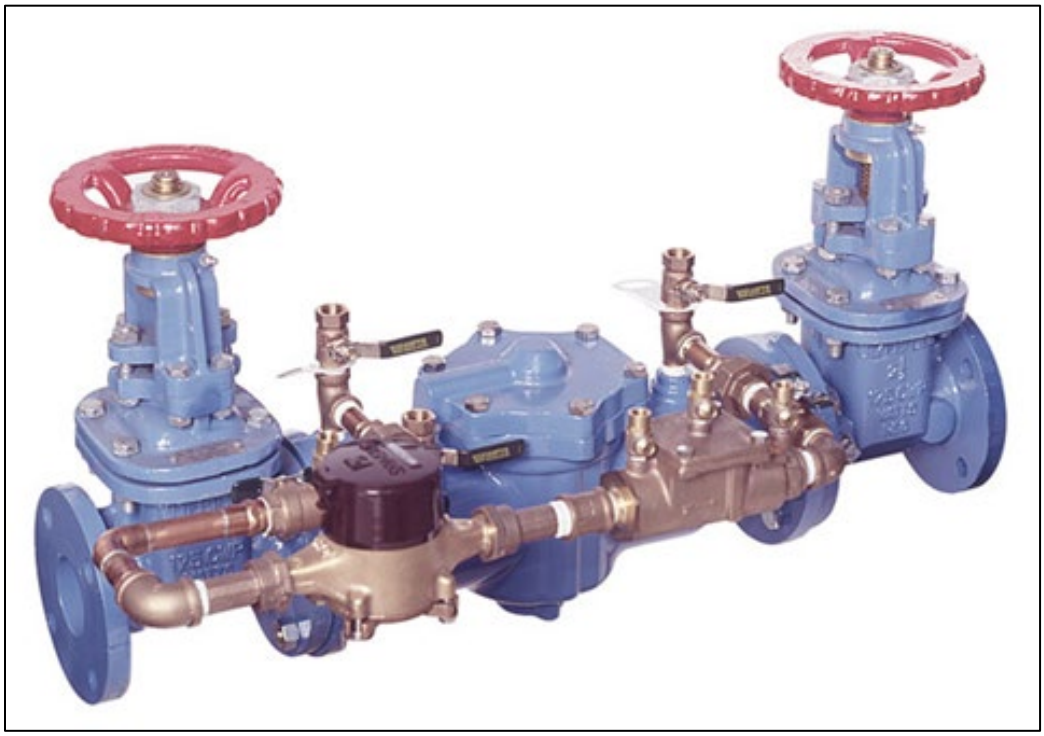

Figure 21: Photograph of a double check detector check.

Residential dual checks

The residential dual check is inexpensive, and only comes in small sizes.

It is not testable or easily inspectable.

It can provide backsiphonage and backpressure protection for individual residences.

For example, it can protect the distribution system from household hazards (for example home photographic chemicals, toxic pesticide sprays, termite control pesticides used by exterminators, etc.)

Figures 22 through 24 show residential dual check valves.

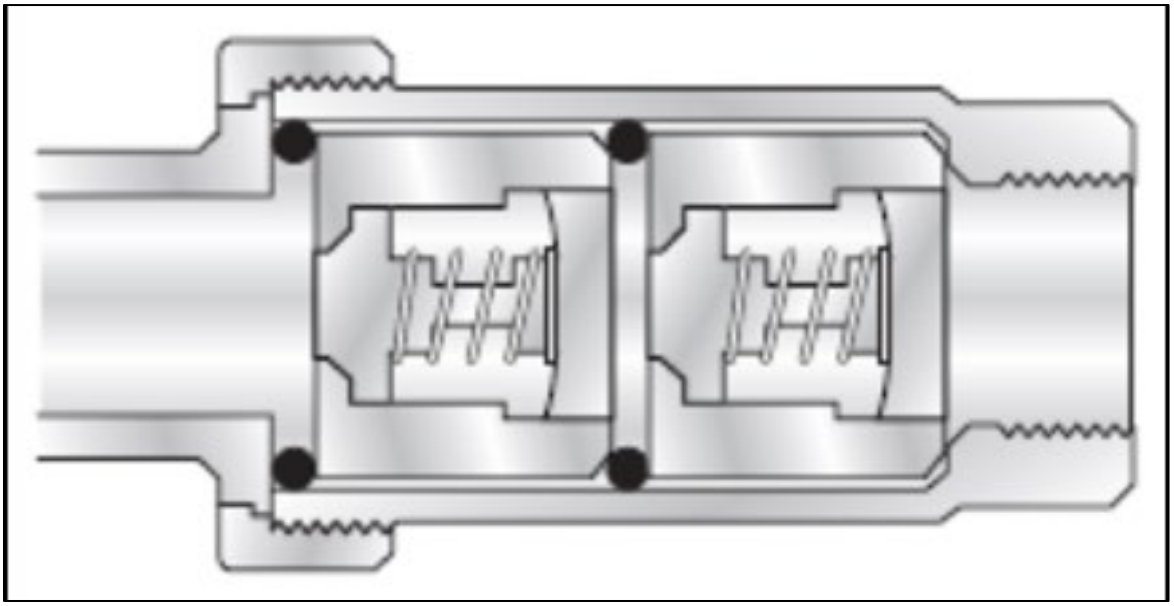

Figure 22: Residential dual check cutaway (from EPA-CCCM).

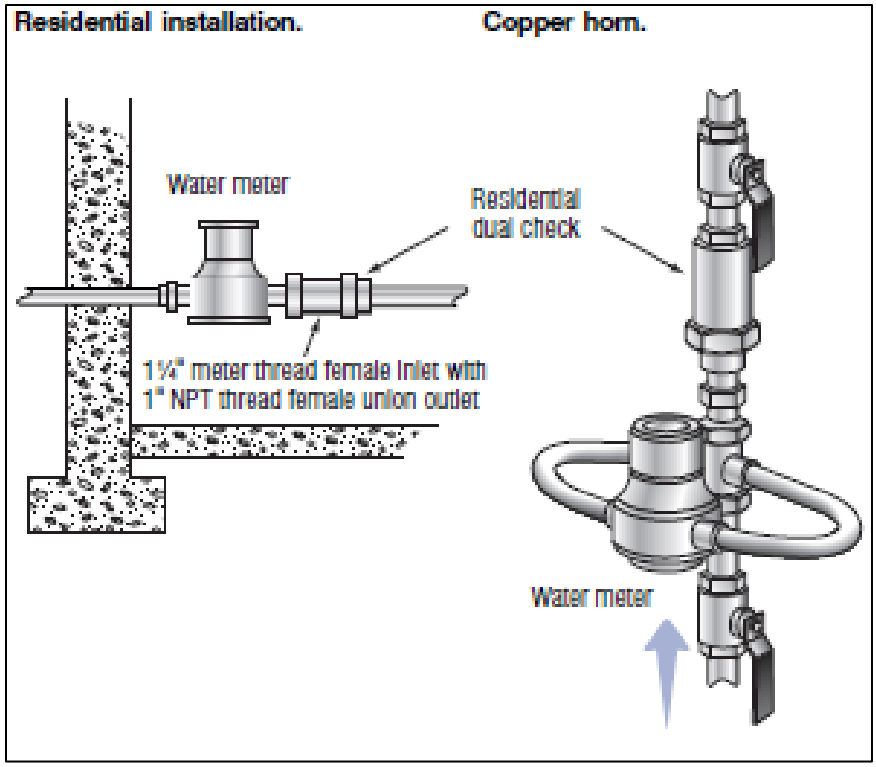

Figure 23: Residential dual check installations from EPA-CCCM.

Figure 24: Photograph of a residential dual check.

RP, RPZ, RPBA

These are the rock stars of the backflow-prevention assembly world.

These acronyms all refer to devices that work on the idea of creating a pressure change across the device with a zone of low pressure.

These devices protect against both backflow and backsiphonage and are essentially a modified double check valve equipped with a relief valve.

Figures 25 through 29 below show reduced pressure zone backflow prevention devices.

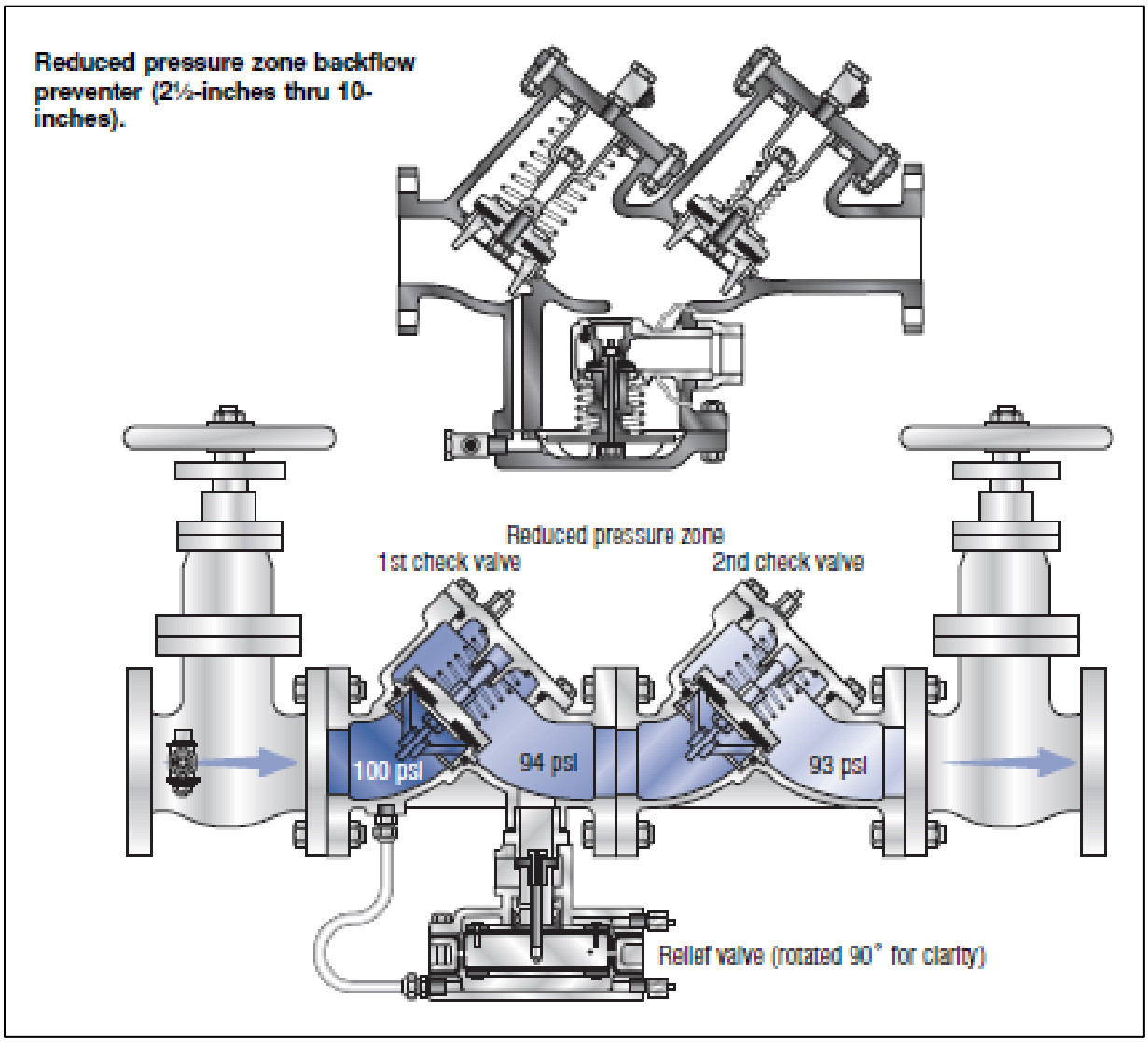

Figure 25: Reduced pressure zone backflow assembly (RPBA) (from EPA-CCCM).

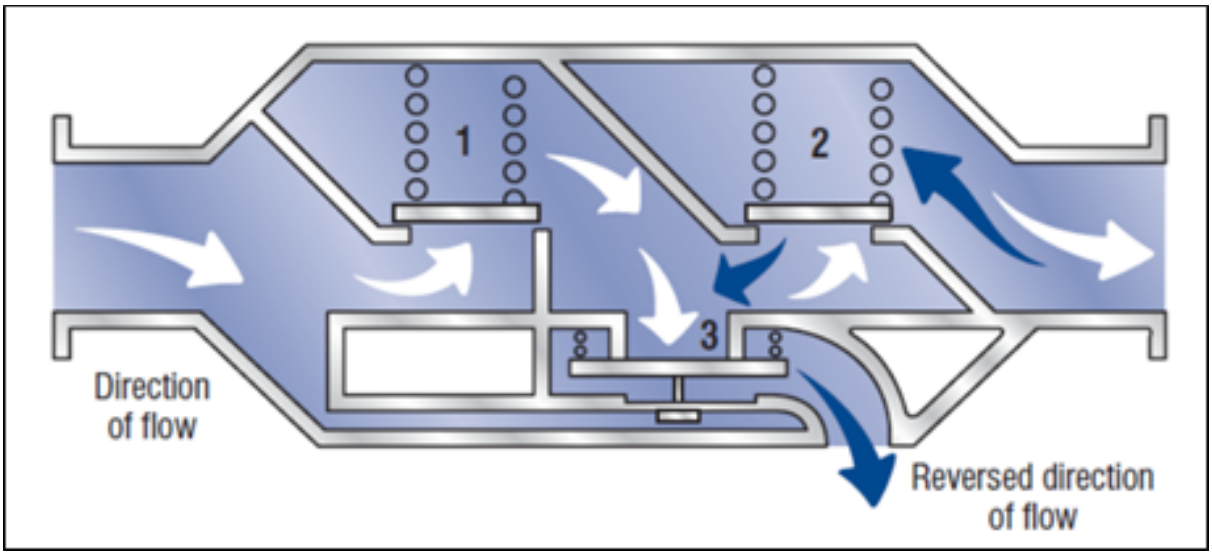

Figure 26: Diagram showing the principle of operation for a RPBA from EPA-CCCM

The EPA-CCCM states:

> *"Maximum protection is achieved against backsiphonage and backpressure conditions utilizing reduced pressure principle backflow preventers.*
>
> *These devices are essentially modified double check valves with an atmospheric vent capability placed between the two checks and designed such that this "zone" between the two checks is always kept at least two pounds less than the supply pressure. With this design criteria, the reduced pressure principle backflow preventer can provide protection against backsiphonage and backpressure when both the first and second checks become fouled.*
>
> *They can be used under constant pressure and at high hazard installations.*
>
> *They are furnished with test cocks and gate valves to enable testing and are available in sizes ¾-inch through 10 inch."*

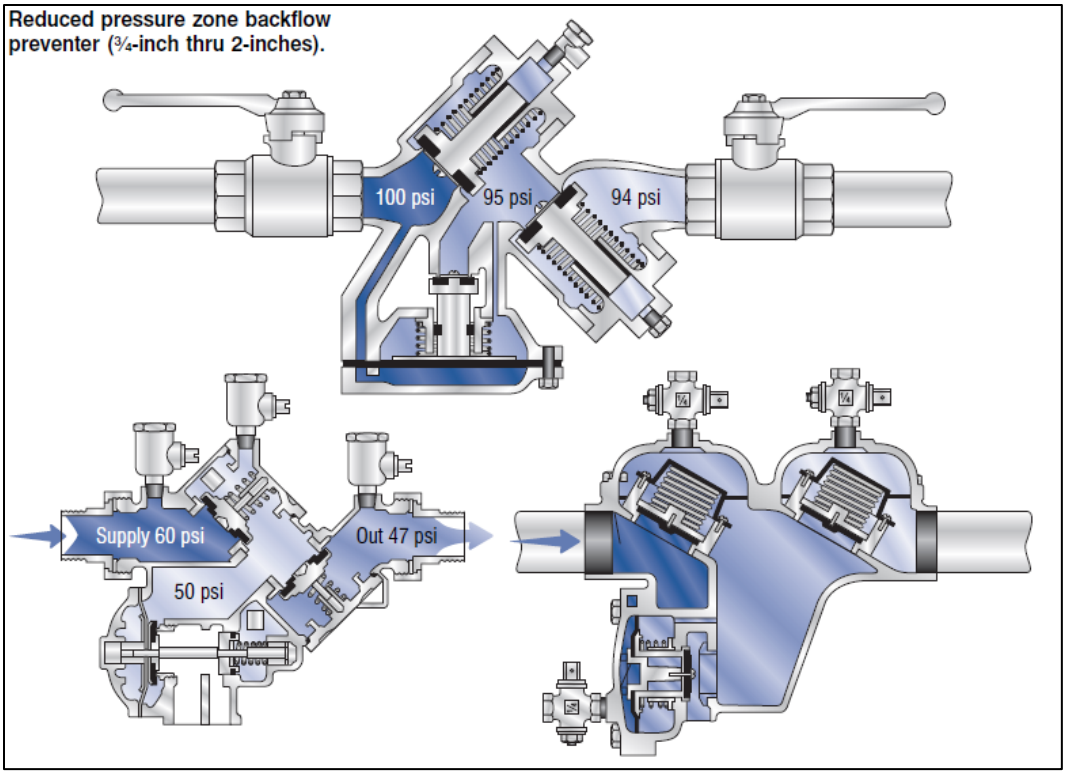

Figure 27: Small RPBA devices from EPA-CCCM

Figure 28: Photograph of a large RPBA

Figure 29: Photograph of a small RPBA

Hose-bibb vacuum breakers

Hose-bibb vacuum breakers are a special case of an atmospheric vacuum breaker. They are generally attached to home taps which are then connected to things like garden hoses, slop sink hoses, spray outlets, etc.

They consist of a spring-loaded check valve that seals against an atmospheric outlet when water supply pressure is turned on. When the water supply is turned off, the device vents to atmosphere.

They can be used against backsiphonage but **not** backpressure.

They are not testable.

Figure 30 shows a schematic of a hose bibb vacuum breaker, and Figure 31 shows a photograph.

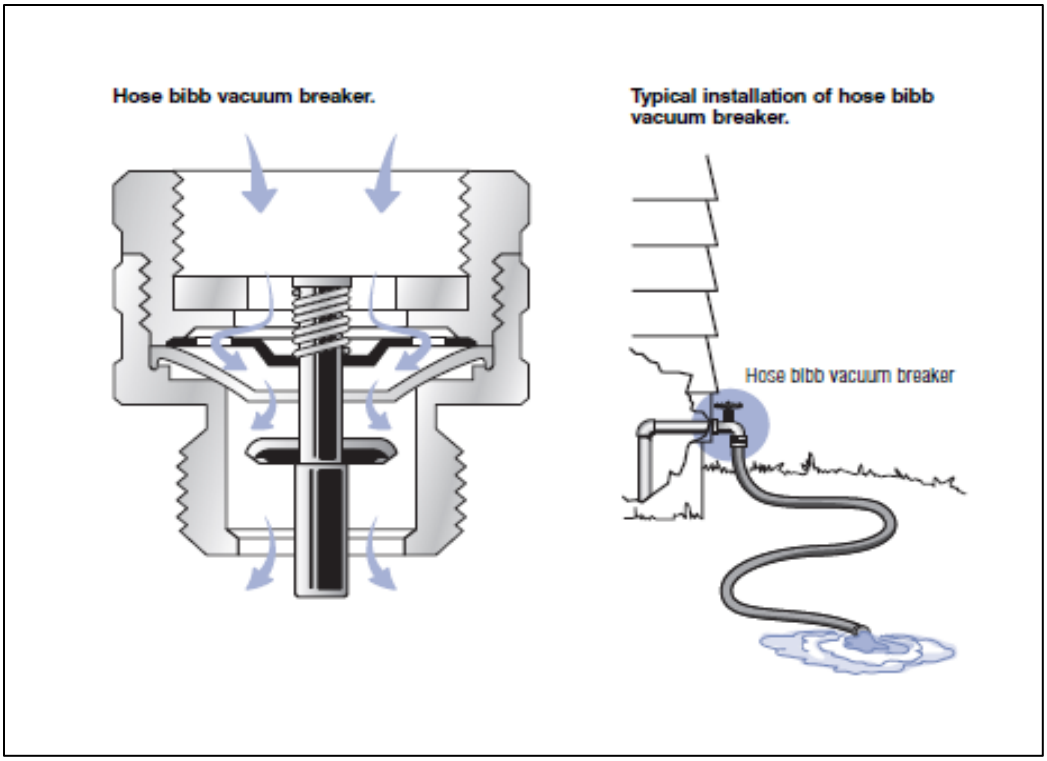

Figure 30: Hose-bibb vacuum breaker (from EPA-CCCM).

Figure 31: Photograph of a hose-bibb vacuum breaker.

Understanding how to select the right device

An effective CCCP must include appropriate means to prevent backflow through the installation of backflow-prevention assemblies at cross-connections or contamination hazard(s).

Whenever possible, the backflow preventer should be located at the point closest to the actual or potential contamination hazard to limit the amount of water exposed to the backflow event should it occur.

Very Important: Select the correct device

Not all backflow assemblies are created equal, thus not all assemblies provide equivalent backflow protection.

Some will protect against **backpressure** and **backsiphonage**, while others will only protect against backsiphonage.

Backflow preventers for **both** backpressure and backsiphonage

For protection from **health hazards** associated with both **backpressure** and **backsiphonage** events, the following types of assemblies may be utilized provided they are installed according to manufacturer's and plumbing code requirements:

- **RP, RPZ, or RPBA:** reduced pressure principle backflow prevention assembly –
  This assembly will function under both the backpressure and backsiphonage condition.
- **AG: air gap**– if this method is used, it must meet the definition of an air gap:
  - The vertical, physical separation must be at least twice the diameter of the water supply outlet, but never less than 1.0 inch [30 TAC §290.38(2)].
  - (The unobstructed vertical distance through the free atmosphere between the lowest opening from any pipe or faucet conveying water to a tank, fixture, receptor, sink, or other assembly and the flood level rim of the receptacle.)
  - The PWS should note that, at a customer connection, once the water flows through an air gap, it no longer retains sanitary control of the water and the supply pressure is lost.

- In addition, both the PWS and the customer must consider that the air gap exposes the water and the container to the environment, allowing for the direct entry of pathogens and debris.

Backflow preventers for backsiphonage

For protection from **health hazards** associated with **backsiphonage** events only, the following types of assemblies may be used. They must be installed according to manufacturer and plumbing code requirements:

- **PVB: pressure-vacuum breaker**—This assembly will function under a backsiphonage condition only and it is allowable to have a control valve downstream.
- **SVB: spill resistant vacuum breaker**—This assembly will function under a backsiphonage condition only and it is allowable to have a control valve downstream.
- **AVB: atmospheric vacuum breaker**—This assembly is non-testable, will function under backsiphonage conditions only, and cannot have a control or shut off valve downstream.

Remember: Increased stringency?

The PWS is allowed to establish **more stringent** requirements for the type of backflow assembly that they will require. The more stringent rules are always applied when situations arise that need them.

Section 1—Activities

Consider the hazards:

Are there hazards like those described in the TCEQ list of hazards present in your PWS?

Can you think of examples of potential hazards that are not in the TCEQ list?

Discuss hazards that might be present in residential connections. Could these change over time?

Workshop 1-Yellow pages workshop excercise:

Using your local yellow pages directory, document potential hazards in your distribution system such as veterinary clinics, commercial laundromats, etc. If a yellow pages hardcopy is not available, you can do an online search at the following website:

www.yellowpages.com/

At a non-PWS training event, the instructor may provide example yellow pages.

Please use the list of hazards (RG-195, Appendix F) included in this manual for ideas about potential hazards that may be in your distribution system.

List your findings on the follow-up form provided below.

Establishment Name	**Potential Hazard**	**Do you serve them drinking water? Yes/No**	**Address/Location/Phone**
Ex: Bevo's Vet Clinic	*Health*	*Yes*	*125 Doggy Lane/123-456-7890*

Establishment Name	Potential Hazard	Do you serve them drinking water? Yes/No	Address/Location/Phone

After identifying and listing hazards, the group will discuss the results.

Please be prepared to use your findings documented in this table when participating in the CSI workshop in Section 5-Customer Service Inspections.

Backflow preventers

Match the backflow preventers: Column A lists different backflow preventers; Column B lists the risk from backflow or backsiphonage. Draw a line connecting the backflow preventer with the type of risk it can protect against.

Column A: Backflow preventers	**Column B: Type of backflow**
SVB	
RPBA	
DCD	Backpressure
AVB	
RP	
PVB	
DCVA	Backsiphonage
RPZ	
HBVB	
AG	
RDC	

Follow-up

Are there any items from this Section that should go on your 'to-do list,' or Follow-Up Form?

Do you know whether there are hazards present in your system? If not, can you think of a follow-up activity you could do that would help you learn that?

Do you feel that you are familiar with the various backflow preventers? If not, can you think of a follow-up activity that would help you with that information? Are there other members of your CCCP team who could benefit from that kind of training—or give that kind of training?

Section 1 Review Questions

- What is a cross-connection?
    1. An angry relative.
    2. A way that bad water can contaminate good water.
    3. One of the two most common causes of drinking water disease outbreaks.
    4. A physical connection between a public water system (PWS) and either another supply of unknown or questionable quality.
- How can external contaminants, get into pressurized potable water mains?
    1. They can't. Water in potable mains is always safe.
    2. Backpressure.
    3. Backsiphonage.
    4. Magic!
- What are some examples of hazards?
    1. Sewage
    2. Animal feed lot
    3. Storage building
    4. Residence
    5. Plating shop
    6. Mortuary
    7. Refinery
    8. Fertilizer storage
    9. Day care
    10. Apartment complex
    11. Hotel with pool
    12. Hospital

Section 1 Review Questions, continued

- Is it a health or non-health hazard?
    1. Sewage
    2. Animal feed lot
    3. Fertilizer storage
    4. Dairy Queen
    5. Plating factory
    6. Alternator shop
    7. Airplane cleaning
    8. Hotel pool
    9. Sheep dip tank
    10. Apartment complex
    11. Archery range
    12. Hospital
- Which of these is a backflow preventer?
    1. RPZ
    2. DCDV
    3. DBP
    4. HBVB
    5. PVB
    6. TMZ

Notes

Section 2: Designing a Program that Fits

When you have a better understanding of the potential hazards present in your distribution system, you can then design a CCCP that fits your system and will provide the highest level of protection for your customers.

If you have an existing CCCP, this Section should give you some ideas for how to improve or enhance your program.

Section 2—Learning objectives

From this Section the student should:

- Be aware of the essential elements of a CCCP
- Understand the different types of CCCP,
- Be able to determine those types of CCCP can be used for their specific PWS, and
- Be prepared to consider the key elements, as they are discussed in detail in later Sections of the DAM.

Elements to establish an effective program

"Where do I begin with developing a CCCP—It seems like such a complicated process?"

A great place to begin is with this Section.

LET'S GET STARTED!

A good place to start is to review the rule language that requires every PWS to protect against the risk of backflow event. The following box has that rule language.

The Rule: Why have a program to prevent backflow events?

The identification and prevention of actual and potential cross-connections, and the evaluation of the hazards to the distributed water, is critical to ensuring the safety of the public drinking water.

§290.44(h)(1) states:

> *"No water connection from any public drinking water supply system shall be allowed to any residence or establishment where an actual or potential contamination hazard exists unless the public water facilities are protected from contamination."*

No two water systems are alike. For example, a municipal system is almost always presented with a different set of challenges and customer base than a rural water supply corporation or privately-owned utility.

A municipal system may have interconnections with many industrial or commercial businesses while rural water supply corporations or privately-owned water utilities may consist entirely of residential connections.

Or, an industrial PWS may have no residential connections, but many hazards.

Most water systems will find that they have:

- No program;
- A partially developed program;
- An ineffective program;
- A non-functional program; or
- An excellent program.

Regardless which category you find yourself, there are crucial elements that are paramount in the development and maintenance of an effective CCCP.

Key elements

Overall, the key elements of a good CCCP include:

- Authority to implement and enforce a CCCP;
- Compliance with state and local regulations, rules, codes, and ordinances;
- Open lines of communication and a good working relationship among all of the staffs and departments;
- Public education programs;
    - Training for water system operators and other personnel on hazard surveys, cross-connection identification, backflow device installation, testing, repair, and maintenance;
    - Installation and testing of devices that prevent backflow consistent with the level of hazard;
- Periodic inspection and testing of devices by certified testers;
- Record keeping and reporting; and
- A backflow-incident response plan.

Types of CCCPs

The most common types of CCCP are:

- Internal
- Containment
- Comprehensive
- Joint

Internal CCCP:

Internal CCCPs are those that exist inside of a facility which contains hazards—like a hospital or chemical plant—which has the potential to endanger its own customers if an internal backflow event occurs. These facilities are usually NOT registered as PWSs. Therefore, their internal programs are usually under the oversight of a PWS's program.

An **internal** CCCP focuses on preventing contamination hazards within a facility's network of potable water lines by installing backflow prevention

assemblies at the exact point (fixture or zones) where hazards are identified. Internal hazards and actual or potential cross-connections are identified during the Customer Service Inspection (CSI).

As part of an **internal** CCCP, backflow prevention assemblies could be installed on the water supply lines feeding water using equipment in a manufacturing facility. A significant benefit of an internal CCCP is that both the distribution system and the customers within the facility are protected.

Very Important: Internal programs

Many facilities need internal programs, for example: hospitals, schools and large manufacturing businesses with large populations of employees, students, teachers, and/or visitors.

A "Containment Program" will not provide protection for these internal customers.

Children, the elderly, and hospitalized patients are often the most vulnerable when it comes to the health effects associated with water that has been contaminated or compromised from backflow events. It is critical to protect them from potential contamination hazards related to backflow.

The rules talk about internal programs. Basically, they say that an internal program has to exist to avoid having a backflow prevention device at the meter. Realistically, this means that the PWS needs to evaluate internal programs and make sure people who work in or visit the facility are protected.

The Rule:

§290.44(h)(1)(B) states:

> *"At any residence or establishment where an actual or potential contamination hazard exists* ***and an adequate internal cross-connection control program*** *is in effect, backflow protection at the water service entrance or meter is not required." (editorial emphasis)*

Internal CCCP Benefits:

- Protects the end user from internal cross-connection hazards while also protecting the outside customers connected to the PWS's distribution network from those same hazards; and
- Minimizes unwanted or problematic pressure drops associated with having too many backflow assemblies plumbed in series.

Internal CCCP Challenges:

- Difficult to manage and monitor numerous hazards and assemblies; especially for the very large PWSs with thousands of service connections;
- Often requires multiple assemblies to address every hazard or potential hazard identified;
- Requires periodic CSIs, above and beyond the initial inspection, to verify whether the internal CCCP is still adequate. Changes and or alterations to the internal plumbing may have been initiated without the prior knowledge of the PWS;
- Requires a more experienced and technical staff to identify, manage and monitor cross-connections;
- Distribution system is at an increased risk for potential contamination when the PWS fails to effectively manage, monitor and inspect cross-connections hazards and assemblies; and
- Increased level of paperwork and management requirements related to the elevated number of assemblies needed for the program to be successful.

Containment:

Containment, also called 'premises isolation,' refers to placing backflow prevention and protection at the main water connection (meter) or entrance to the facility or customer to isolate the potential contamination or contain it downstream of the customer's meter.

For example: Manufacturing facility

A backflow prevention assembly installed at the main water supply line or meter to a manufacturing facility would protect the PWS's distribution system from contamination hazards by 'isolating' those hazards inside the manufacturing facility. However, the employees would still be at risk.

The TCEQ **does not recommend** or **promote** the installation of backflow prevention assemblies at all service connections, as it is not always necessary.

In fact, TCEQ rules emphasize that the use of a backflow protection at the meter is considered **additional protection** and doesn't **negate** the **need** or **use** of backflow protection on internal hazards.

The Rule:

§290.44(h)(5) states:

> *""The use of a backflow prevention assembly at the service connection shall be considered as additional protection and shall **not negate** the use of backflow protection on **internal hazards** as outlined and enforced in the local plumbing codes." (editorial emphasis)*

The concept of sanitary control authority will be covered in much more detail in Section 4—Establishing Enforcement Authority.

Why not isolate every connection?

There are two main reasons not to isolate every connection.

There is no risk:

Residential buildings generally have no special water-using equipment or processes and thus do not need containment backflow prevention.

Typical residential connections only require minimal backflow prevention such as:

- Hose-bibb vacuum breakers,
- Air gap for their water softener drain line, and
- Backflow prevention assembly on their irrigation system.

It would cause pressure issues:

Overprotection can lead to unwanted pressure drops associated with backflow prevention devices. Basically, it can make the distribution system into a closed system so that there is no relief for pressure changes caused by normal changes in usage. This can lead to unwarranted costs to the customer.

The rule explicitly states that no backflow prevention assembly is needed when there is no hazard.

The Rule: Sometimes neither will apply*

§290.44(h)(6) states:

> *"At any residence or establishment where there is no actual or potential contamination hazard, a backflow prevention assembly is not required."*

**Local codes and ordinances may be more stringent and would apply.*

Thermal expansion

When a backflow device is placed on a house or business, the building's plumbing becomes a 'closed system.' When water is heated in the hot water heater, there is nowhere for excess pressure to go.

Protection from thermal expansion is provided in a plumbing system by the installation of a thermal expansion tank in the hot water system piping downstream of the hot water tank and a temperature and pressure relief valve at the top of the tank.

Important Recommendation: Thermal expansion

The TCEQ recommends that when a containment backflow assembly is required, that the water system alert the customer to the hazards of **thermal expansion** and the need of turning the water off to the entire site in order to test the backflow prevention assembly.

In an effort to eliminate the need of turning the water completely off, some systems will install redundant assemblies *in parallel* so that water flows in through one assembly, while the other is isolated and tested.

When is containment or premises isolation warranted?

The American Water Works Association (AWWA, 2015) and the TCEQ (RG-478) support the need for containment or premises isolation for the following reasons or conditions:

- Connection is a health hazard (facility/residential);
- Customer does not comply with codes or regulations;
- Facility does not allow access for surveys or inspections;
- Facility piping complexity due to multiple systems and or improper labeling/identification;
- Facility frequently changes their plumbing configuration;
- Connection has other water sources, like wells or interconnections;
- Connection practices rainwater harvesting (facility/residential);
- Irrigation in the same location as septic fields or lines;
- Irrigation with chemical addition; or
- Facility's failure to produce accurate as-built engineering documents detailing internal potable water lines and potential cross-connection hazards.

The rule language emphasizes that containment is a form of additional protection that is used when hazards are present.

The Rule:

§290.44(h)(1)(A) states:

> *"At any residence or establishment where an **actual or potential** contamination hazard exists, **additional** protection shall be required at the meter in the form of an air gap or backflow prevention assembly. The type of backflow prevention assembly required shall be determined by the specific potential hazard identified in 290.47(i) of this title (relating to Appendices)." (editorial emphasis)*

Containment CCCP Benefits:

- Limited jurisdictional needs
- Limited liability
- Prevents unsuitable water from entering and potentially contaminating the PWS's distribution network
- More suitable for connections who present security or premises access difficulties
- Protects the water distribution system regardless of whether alterations or inappropriate plumbing practices have been initiated downstream of the service meter
- More suitable for connections that may present the highest level of risk or health hazard

Containment CCCP Challenges:

- Provides no level of protection for customers inside the facilities
- Thermal expansion caused from having a closed loop system
- Problematic pressure drops
- Requires periodic CSIs, above and beyond the initial inspection, to verify whether the internal CCCP is still adequate. Changes and/or alterations to the internal plumbing may have been initiated without the prior knowledge of the PWS
- Requires a more experienced and technical staff to identify, manage and monitor cross-connections

- Water system distribution network is at an increased risk for potential contamination when the PWS fails to effectively manage, monitor and inspect cross-connections hazards and assemblies
- Increased level of paperwork and management requirements related to the elevated number of assemblies needed for the program to be successful

Comprehensive CCCP:

A **comprehensive** CCCP provides the highest level of protection for the customer and the PWS, as it takes advantage of both the **containment** and **internal** CCCPs (AWWA, 2015).

Most cities and medium-to-large communities in Texas have a comprehensive program.

The Rule:

§290.44(h)(5) states:

> *"The use of a backflow prevention assembly at the service connection shall be considered as **additional** backflow protection and **shall not negate** the use of backflow protection on **internal** hazards as outlined and enforced by local plumbing codes." (editorial emphasis)*

The Comprehensive CCCP combines the responsibility of the water purveyor, who provides safe, potable drinking water to the meter and the responsibility of the plumbing authorities, who are responsible for all potable connections downstream of the meter. It is the mechanism which a PWS can uses to ensure that these responsibilities are met.

Comprehensive CCCP Benefits:

- Provides highest level of protection for the end user and water system
- Provides the highest level of versatility for the end user and the water system

Comprehensive CCCP Challenges:

- Better suited for water systems who have a building code official onsite such as a municipal system
- Difficult to manage and monitor numerous hazards and assemblies; especially for the very large water systems with thousands of service connections
- Often requires multiple assemblies to address every hazard or potential hazard identified
- Requires periodic CSIs, above and beyond the initial inspection, to verify whether the internal CCCP is still adequate. Changes and or alterations to the internal plumbing may have been initiated without the prior knowledge of the PWS
- Requires a more experienced and technical staff to identify, manage and monitor cross-connections

Multiple-authority joint CCCP:

A **joint CCCP** takes advantage of using multiple jurisdictional authorities, working in accord to ensure an effective CCCP. Privately owned or rural PWSs can take advantage of forging interagency agreements with local or county plumbing authorities, fire marshals, and irrigators (AWWA, 2015).

Although these joint programs have not been common in Texas historically, you should consider whether coordination could help your CCCP. For example, two nearby cities might be able to share the expense of hiring a plumbing inspector. Can you think of other examples?

In order for a **joint program** to be successful, AWWA recommends that the PWS:

- Identify and establish each agency's jurisdiction;
- Establish a formal agreement between the agencies that will be involved in enforcing and managing the CCCP (for example: interagency agreement between the PWS and the county);
- Clearly define each agency's responsibilities;
- Designate the lead agency and combined program managers;
- Develop enforcement of plumbing, irrigation, and fire sprinkler codes and PWS's CCCP requirements;
- Establish program record management responsibilities;

- Designate the commitment of staff and resources for each jurisdiction; and
- Ensure that periodic meetings are scheduled and adequately attended.

However, please remember:

The PWS is ultimately responsible or liable for protecting its own distribution system and customers from contamination hazards from backflow events.

Joint CCCP Benefits:

- Beneficial for privately owned or rural water supplies that don't have plumbing officials or inspectors on hand
- Provides a higher level of protection for systems that are small and have a limited number of staff to monitor and maintain a program

Joint CCCP Challenges:

- Requires much more communication and organizational efforts

Section 2—Activities

Consider internal programs

Does your PWS have any customers that may have or need internal programs? How could you work with them to develop those programs?

Consider containment programs

Are there places in your system where a risk may exist to your PWS's potable water? Are backflow preventers present to contain the risk and protect your distribution system?

Consider a residential community:

- Are there any home businesses that use hazardous chemicals?
- Are there any homes with animals?
- Private wells?

Consider joint programs

Joint programs are when two nearby PWSs or other entities cooperate to share in a CCCP. Can you think of any examples that might apply to your system?

Follow-up

Are there any items from this Section that should go on your 'to-do list,' or Follow-Up Form?

Section 2 Review Questions

- The essential elements of a CCP include:
    1. Authority to implement the program.
    2. Closed, secret communication.
    3. Public education.
    4. A backflow-incident response plan.
    5. Special uniforms.
- An internal cross-connection control program:
    1. Protects people who work in or visit the facility.
    2. Is designed and managed by the public water system.
    3. Is evaluated by the public water system's cross-connection control program.
- When is containment or premises isolation warranted?
    1. A connection is determined to be a health hazard.
    2. A customer's refuses to comply with the plumbing code.
    3. A food processing plant keeps changing their plumbing around.
    4. A house has a private well that is plugged.
    5. A building does not contain an active business.

Section 3: Involving Stakeholders: "The 3 C's"

Internal and external stakeholder involvement will strengthen your CCCP. Internal stakeholders will be members of the CCCP and steer the system successfully. External stakeholders will help the CCCP meet the needs of the community or business.

Section 3—Learning objectives

This section will help the student:

- Learn how the 3 Cs can help a CCCP succeed;
- Identify internal and external stakeholders whose participation could benefit the CCCP, and who could benefit from it; and
- Set goals for getting stakeholder input, outreach, and education.

Purpose of stakeholder involvement ('who?')

Internal and external stakeholder involvement in the phases of development and management will ensure a more effective and relevant program. It will also promote an atmosphere of 'buy in' in the combined effort to protect public health from the hazards of cross-connections.

Many of the CCCPs that have *not* worked were developed with little or no input from stakeholders. Stakeholders may cause you to consider things you hadn't thought of as potential benefits or risks. Everyone's experience and job give them insight into a different side of an issue, which lessens surprises.

Soliciting help from stakeholders will help you determine what program will work best for your specific location or situation.

Additionally, these very stakeholders, or a portion of them, may also be responsible for assisting you in the implementation and enforcement of your CCCP.

For example, in one case a city asked the Council member who was most opposed to starting the CCCP to be a participant in the plan. After learning more about how the CCCP would benefit his constituents, the Council member became a fervent supporter.

Communication, coordination and cooperation

A successful backflow prevention and CCCP will include the three *C*s:

- Communication,
- Coordination, and
- Cooperation.

When the stakeholders understand that the CCCP goal is overarching, and intended to help everyone involved, a cooperative atmosphere will be achieved. Cooperation comes from sharing a good mission.

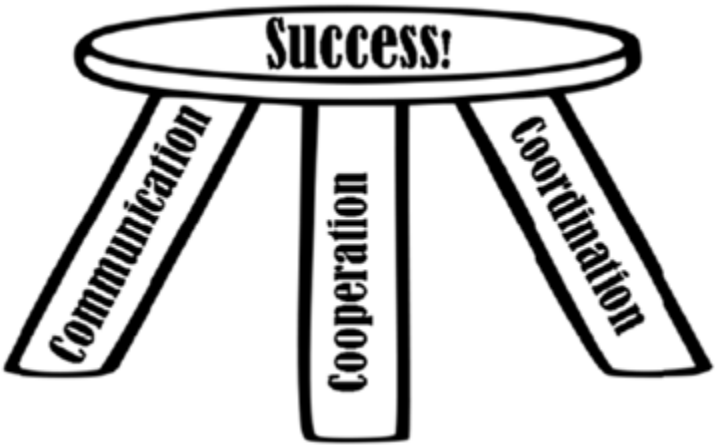

Figure 32: 3 Cs

Communication

The first step is **communication**. That means making sure that everyone who may have an interest or concern is 'in the loop.' Communication includes both talking AND listening, so strategies for getting stakeholder input are important. Communication tasks are like having meetings and public outreach.

Coordination

The next step is **coordination**. Without coordination, people can step on each other's toes—for example, two people may be doing the same task, resulting in inefficiency. Coordination tasks are like setting clear responsibilities.

Cooperation

The overall principle is **cooperation**. Successful cooperation achieves goals.

Internal stakeholders: Who should be on the CCCP?

Some of the personnel included in a cross-connection control program may be:

- City, utility, or district management
- Plumbing inspector(s)
- Building official(s)
- Employees in environmental services
- Water-department management and personnel
- Fire marshal's office
- Industry professionals (irrigators, plumbers, testers, inspectors)

For a successful program, PWSs will be required to communicate with their customer base as well as the departments or authorities they have partnered with to assist with the management and enforcement of their CCCP.

Roles and responsibilities

Some of the people who will have an active role in a CCCP include:

- The CCCP Program Manager;
- The highest approval authority—like the Mayor, City Manager, General Manager of a utility, or Owner of a business;
- Data entry staff to document required records;
- A secretary to maintain minutes and records; and
- Members representing other internal stakeholders, for example: plumbers, irrigators, etc.

Figure 33 shows how of each member contributes to the success of a CCCP.

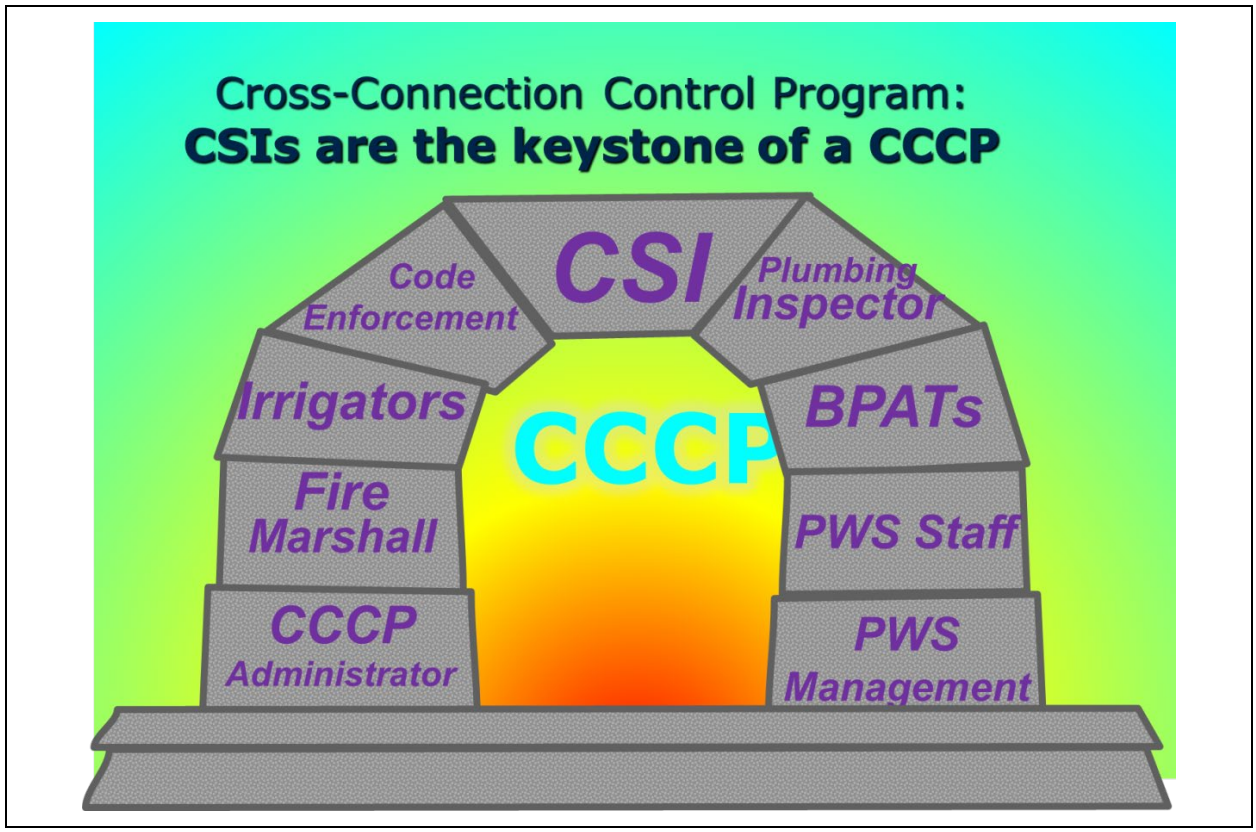

Figure 33: CSI keystone principle graphic

When one member or 'stone' is removed, the program becomes unstable and will not stand. Every member is important.

Additionally, the customer service inspection (CSI) is the 'keystone', providing the most stability to the structure or program. Therefore, CSIs are integral to the success of any CCCP. They are covered in more detail in **Section 5** of this Student Guide.

CCCP Program Manager:

The CCCP Program Manager is not necessarily the person with the highest authority over the PWS. For example, the Mayor may receive information about CCCP activities, but they are probably not going to set up meetings, or document activities.

Instead, the CCCP Program Manager should be granted the authority and responsibility to implement the CCCP by the Mayor (or equivalent, for example: General Manager, Owner, etc.)

Important: Program Manager role

The Program Manager must **follow-up** to ensure that deadlines and goals are accomplished, including:

- Corrective actions,
- Communication with customers, and
- Communication with CCCP participants, like local BPATs and CSIs.

The Program Manager should promote evaluation of the effectiveness and success of the CCCP by including the team in routine SWOT analysis of program:

- **S**trengths,
- **W**eaknesses,
- **O**pportunities, and
- **T**hreats.

The Program Manager should use this valuable team input to establish:

- Program improvement recommendations
- Program goals
- Corrective actions
- Time lines for implementation of recommendations and corrective actions
- Implementation assignments (authorities most equipped to successfully accomplish goals recommendations and corrective actions)

Corrective actions could include customer correspondence, public education, on-site evaluations and inspections, administrative fees, termination of service, work orders and possible legal action.

Potential CCCP members

A PWS developing or updating their CCCP should consider a broad list of possible CCCP members. By involving many areas, the risks of poor

communication are lessened. When only one area is involved in the CCCP, a PWS runs the risk of failing to accomplish some goals.

For example, one CCCP was run solely by the Water Treatment Department, so Code Enforcement personnel were not even aware of CCCP requirements they needed to be enforcing.

<u>At a medium or large-sized city:</u>

- Members of City Management
- City Council Members
- Program Administrator:
    - Department Head, Assistant City Manager, etc. depending on organizational structure
- Water Manager
    - Maintenance supervisors, workers
    - Water production supervisors, operators
    - Water distribution supervisors, operators
- Code Enforcement
    - Plumbing Inspectors
- Fire Marshal
- Local CSIs, BPATs, plumbers, irrigators
- Local trades
    - Plumbing suppliers
    - Pool and supply contractors
    - Construction and building organizations
- Customers
    - Wholesale water customers
    - Industrial water customers
    - Developers
    - Active citizens, citizen group representatives
- Local Regulatory Authority (TCEQ)

<u>At a rural utility (WSC or District):</u>

- Board President
    - Board Utilities Sub-committee
- General Manager
    - Water Manager
    - Water Operators
- Volunteer Fire Department
- Local BPATs, plumbers, and irrigators
- Local Trade Groups

    - Plumbing suppliers
    - Pool and supply contractors
- Construction and Building Organizations
- Wholesale Water Customers
- Industrial Water Customers
- Local Regulatory Authority (TCEQ)
- Interested citizens

At a facility that is developing an internal program:

- Regulatory Manager
- Facilities Maintenance Supervisor
- Production Manager
- Safety Committee
- Plumbers
- Interested citizens

Transient noncommunity (TNC) systems

Twenty percent of the 6,952 PWSs in Texas are TNCs. These PWSs are not required to have a licensed operator, but they still have to protect against cross connections.

These PWSs CCCPs will look more like an internal program, as described in Section 2. For a TNC, stakeholders could be:

- Owner
- Manager
- Contract operator

Warning: PWS Responsibility

No matter who is included in the CCCP, remember that as the PWS, you have the responsibility to protect your water distribution system and customers from hazards associated with backflow events from cross connection and the liability if you fail.

It is paramount to develop a program that meets at least the minimum TCEQ regulatory requirements. The PWS must ensure that your program meets all state/local regulations, rules, codes, and ordinances.

Other stakeholders, like the public, plumbers, BPATs, CSIs, and irrigators can help the program succeed, but the buck stops at the PWS.

External communication: Communication with Customers:

Most PWSs will be responsible for communicating with three types of customers:

- Residential
- Commercial/Industrial
- Wholesale

The people drinking the water will always be important stakeholders.

Communication and coordination between local authorities and the PWS could be as limited as exchanging program related information on a monthly basis or as extensive as weekly communications between specific authorities.

The CCCP Manager should be responsible for all initial communication with customers. Initial communication should include:

- Notification of the water system's policy (or change in policy) to establish and manage a CCCP;
- Public education materials describing the need for cross-connection control; and
- Hazard assessment information, i.e., either the distribution of water use questionnaires or the scheduling of a cross-connection hazard survey.

Tools that a PWS may use for sharing information and educating the public regarding the CCCP include:

- Bill insert brochures
- Town Hall or Council Meetings
- Public Service Announcements (PSA)
- Newspapers
- Multimedia announcements in and on Social Media Networks
    - Email
    - Facebook or web page
    - Reverse 311
    - Webinar or video conference

This is not meant to be an exhaustive list, as there are many more tools that can be used to better inform and educate your customers.

Important: Keep communicating!

Initial communications are not a means to an end. For a successful program, open lines of communication should **continue** throughout the life of the CCCP. Communications related to recordkeeping and management will be covered in **Section 8**.

Meeting with joint and local authorities:

It is paramount that the PWS organize regularly scheduled meetings in order to discuss program status and needs with the following joint and local authorities:

- Program Administrator,
- Water Manager,
- Water Operators,
- Plumbing Inspectors,
- Fire Marshal,
- Members of City Management,
- City Council Members,
- Local Plumbers,
- Local Irrigators,
- Local Trade Groups (plumbing suppliers, pool and supply contractors, etc.),
- Construction and Building Organizations,
- Wholesale Water Customers,
- Industrial Water Customers, and
- Local Regulatory Authority (TCEQ).

This is especially true of PWSs that have decided to enter into interagency or interlocal agreements with authorities to enforce and manage their CCCP.

A secretary should be appointed to take notes during these formal meetings.

Section 3—Activities

Organization Chart Workshop

The 'Organization Chart' workshop provides an active-learning opportunity.

- **Purpose:** Participants will consider the way that people with different jobs all have a 'stake' in a CCCP.
- **Groups:** Groups of two are recommended. The maximum group size would be three, in which case the group should pick a spokesperson.
- **Instructions:** Evaluate who will be internal stakeholders for a CCCP, who will be the highest authority who is part of the CCCP, and consider who should run the day-to-day CCCP activities.

Depending on the training location, size and participants, the instructor may or may not implement this workshop.

(1) PWS Participants: PWS-specific internal stakeholders

If you have a CCCP program, update the list of the members' names and what role they play in your CCCP. If there are upcoming transitions—for example, retirements—think about that and list ideas for people who can take over from those members.

If your CCCP is in the development stages, think about whom in your community or organization might be a valuable member of your CCCP group.

(2) Large PWS example: Internal Stakeholders

For a group that includes people from various organizations, this exercise offers an example Organization Chart that can be used to identify internal stakeholders.

A historical Organization Chart for the City of Austin (available as public information on the City's web site) is shown on the next page, followed by a table to capture your results.

Identify: WHO would have a 'stake' in the CCCP (and why), WHO would be the person with highest authority as part of the CCCP, and WHO would implement day-to-day activities of the CCCP. Who should be the Program Manager?

City of Austin, Texas

Austin Residents

Mayor and City Council

Interim City Manager
Elaine Hart
512-974-2200

Office of the City Auditor
Corrie Stokes, City Auditor
512-974-2468

Office of the City Clerk
Jannette Goodall, City Clerk
512-974-2210

Municipal Court
Mary Jane Grubb, Court Clerk
512-974-4692

Municipal Court Judge
Sherry Statman, Presiding Judge
512-974-4841

Austin Energy
Jackie Sargent, General Manager
512-322-6002

Equity Office
Brion Oaks, Equity Officer
512-974-7979

Law Department
Anne Morgan, City Attorney
512-974-1355

Office of Police Monitor
Deven Desai, Interim Police Monitor
512-974-9090

Support Services

Assistant City Manager
Mark Washington
512-974-2410

Austin Convention Center
Mark Tester, Director
512-404-4000

Building Services
Eric Stockton, Officer
512-974-7948

Communications and Technology Management
Stephen Elkins,
Chief Information Officer
512-974-7702

Fleet Services
Jennifer Walls, Interim Officer
512-974-1795

Human Resources Department
Joya Hayes, Director
512-974-3246

Innovation Office
Kerry O'Connor, Officer
512-974-1637

Labor Relations Office
Larry Watts, Interim Officer
512-974-6785

Telecommunications & Regulatory Affairs
Rondella Hawkins, Officer
512-974-2999

Staff Liaison:

Development Services

Assistant City Manager
Bert Lumbreras
512-974-7906

Aviation Department
Jim Smith, Executive Director
512-530-7518

Development Services Dept.
J. Rodney Gonzales,
Director
512-974-2313

Neighborhood Housing and Community Development
Rosie Truelove, Interim Director
512-974-3100

Planning and Zoning Dept.
Greg Guernsey, Director
512-974-2387

Watershed Protection Dept.
Joe Pantalion, Director
512-974-3438

Staff Liaison: City Clerk

Infrastructure Services

Assistant City Manager
Robert Goode
512-974-7717

Austin Resource Recovery
Sam Angoori, Interim Director
512-974-1987

Austin Transportation Department
Robert Spillar, Director
512-974-7092

Austin Water Utility
Greg Meszaros, Director
512-972-0108

Corridor Program Implementation Office
Mike Trimble, Officer
512-974-2610

Public Works Department
Richard Mendoza, Director
512-974-7773

Staff Liaison: Austin Energy

Community Services

Interim Assistant City Manager
Sarah Hensley
512-974-7717

Animal Services Office
Lee Ann Shenefiel, Interim
Chief Animal Services Officer
512-978-0536

Austin Parks and Recreation Department
Kimberly McNeeley,
Interim Director
512-974-6717

Austin Public Health
Stephanie Hayden,
Interim Director
512-972-5010

Austin Public Library
Toni Lambert, Interim Director
512-974-7449

Office of Real Estate Services
Lauraine Rizer, Officer
512-974-7078

Public Safety

Assistant City Manager
Rey Arellano
512-974-2222

Austin Code Department
Cora Wright, Interim Director
512- 974-1970

Austin Fire Department
Rhoda Mae Kerr, Chief
512-974-0130

Austin Police Department
Brian Manley, Interim Chief
512-974-5030

Austin/Travis County Emergency Medical Services
Ernesto Rodriguez, Chief
512-972-7203

Austin/Travis County Office of Medical Director
Dr. Mark E. Escott, Director
512-978-0000

Downtown Austin Community Court
Pete Valdez, Court Administrator
512-974-4873

Homeland Security and Emergency Management
Juan Ortiz
Director
512-974-0462

Staff Liaison: Municipal Court, Municipal Court Judges and Police Monitor

Administrative Services

Chief of Staff
Ray Baray
512-974-6339

Communications & Public Information Office
Doug Matthews,
Chief Communications Officer
512-974-2220

Intergovernmental Relations
Brie L. Franco
Intergov. Relations Officer
512-974-2285

Office of Sustainability
Lucia Athens, Officer
512-974-7902

Small & Minority Business Resources Dept.
Veronica Briseño, Director
512-974-7600

Staff Liaison: Equity Office

Financial Services

Interim
Chief Financial Officer
Greg Canally
512-974-3344

Budget Office
Ed Van Eenoo
Deputy Chief Financial Officer
512-974-2610

Capital Contracting
Rolando Fernandez
Interim Officer
512-484-7743

Controller's Office
Diana Thomas, Controller
512-974-2600

Economic Development Department
Kevin Johns, Director
512-974-7819

Office of Performance Management
Kimberly Olivares
Chief Performance Officer
512-974-2610

Purchasing Office
James Scarboro
Purchasing Officer
512-974-2500

Treasury Office
Art Alfaro, Treasurer
512-974-7890

Updated 07/01/2017

-Internal Stakeholder exercise, continued

Individual, Title	Organization	CCCP Role

(3) Internal stakeholders for a small PWS

As an exercise, consider a smaller community. What community members might be able to actively participate in a CCCP?

Exercise: External stakeholders

For each of the examples above, discuss external stakeholders:

- What members of the community could add value to starting a new CCCP?
- What members of the community need information about the CCCP but would not be expected to participate?
- Who are the most important external stakeholders?

Exercise: Setting up meetings

Think about the CCCP meetings that your PWS has, or could have.

If your PWS has a current CCCP, think about:

- How often do you meet? Is that a good frequency?
- What issues do you cover? Are there other topics that might be good?

If your PWS is in the development phase, think about:

- Where can you meet?
- Who can set up the meetings?
- What will your first (or next) meeting cover? Are there things that the members need to do to get the CCCP started?
- Who will bring doughnuts?

Follow-up

Are there any items from this Section that should go on your 'to-do list,' or Follow-Up Form?

- Are the right people included in your PWS's CCCP? Do you need to add or replace members?
- Is your outreach to external stakeholders successful? Do you need to do more outreach? What kind—brochures, posters, meetings?

Section 3 Review Questions

- What are the "Three Cs"?
    1. Chips, chocolate, and candy.
    2. Constipation, conflagration, and combobulation.
    3. Communication, coordination, and cooperation
- Who might participate in a City's Cross-Connection Control Program?
    1. Water Utilities
    2. Code enforcement
    3. Plumber
    4. Health department
    5. Irrigator
    6. Fire Department
    7. Customer Service Inspector
    8. Backflow Prevention Assembly Tester
- What some responsibilities of the CCCP Manager?
    1. Schedule meetings
    2. Bring donuts
    3. Ensure compliance with recordkeeping
    4. Make sure that the program is implemented.
    5. Test backflow prevention assemblies.

Section 4: Establishing Enforcement Authority

A PWS needs to establish authority over sanitary control of drinking water in their service area. Without authority, hazards may go unnoticed, causing undesirable risk to customers.

Section 4—Learning objectives

In this Section students will learn to:

- Be aware of the requirements for PWSs to have authority for implementing a CCCP;
- Learn the difference between 'codes' and 'ordinances;'
- Be aware of the most commonly accepted plumbing codes;
- Know the critical elements of the Retail Service Agreement; and
- Understand the importance of 'sanitary control.'

Appropriate authority

The TCEQ requires that all PWSs adopt at least one the following management/enforcement tools:

- Plumbing Ordinance, or
- Plumbing Code/Regulations, or
- Retail Service Agreement

These tools are intended to provide the PWS with the legal authority to implement and enforce their CCCP. It is very important that the PWS choose the tool that best fits the specific needs of their system. **Remember, no two water systems are alike.**

The appropriate management/enforcement program is often determined by a water system's form of governance.

For example, a municipal water system is likely to adopt a **plumbing ordinance** while a rural water system is likely to rely on a **Retail Service Agreement** to meet their enforcement needs.

Rule language

The rule box below shows the language that requires a PWS to take authority to implement and enforce their CCCP.

The Rule: What gives a PWS the authority to implement and enforce the program?

§290.46(i) states:

> *"Plumbing Ordinance: Public water systems must adopt an adequate plumbing ordinance, regulations, or service agreement with provisions for proper enforcement to insure that neither cross-connections nor other unacceptable plumbing practices are permitted. (See 290.47(b) of this title (relating to Appendices)).*
>
> *Should sanitary control of the distribution system not reside with the purveyor, the entity retaining sanitary control shall be responsible for establishing and enforcing adequate regulations in this regard."*

Program flexibility

It's not unusual for water systems to adopt more than one of the above tools. Many cities have adopted plumbing ordinances, while also using service agreements.

It's important to note however, that regardless of the enforcement program tool(s) used, the PWS must enforce at least the minimum TCEQ standards.

Increased stringency

The PWS is at liberty to establish more stringent requirements; however, the more stringent rules are always applied when situations arise.

An investor-owned utility has only limited authority to adopt more stringent requirements than the TCEQ rules [30 TAC 291.93(5)].

Success in developing an effective enforcement program, and then failing to implement it, will produce the same results as not having developed one at all. It's very important that the PWS is willing to take the necessary steps in order to hold their customers accountable with the regulations they have adopted.

Establishing enforcement policies

The **PWS SHOULD BE PROACTIVE** and establish their enforcement policies before any enforcement action is required. The PWS's management or administrative staff (council, city manager, general manager, board president, etc.) and lawyer(s) should be involved in establishing the enforcement policy. The policy lays out in detail the enforcement procedures to be followed by the CCCP Program Manager.

A Code is not the same as an Ordinance

The difference between a Plumbing Code and a Plumbing Ordinance (or Service Agreement) can be confusing. Table 1 summarizes some differences.

Table 1: Differences between Code and Ordinance

Plumbing Code	**Plumbing Ordinance**
Written by National or International organization	Written by Local organization, for example, City.
Applies only if adopted by a local entity.	Applies to the Local entity. For example, City Limit, extra-territorial jurisdiction (ETJ) and/or CCN certificated area.
Includes detailed requirements for premise plumbing.	Refers to detailed premise plumbing requirements in Code.
Does not provide authority to Local organization to perform inspections.	Adopts authority of Local organization to enter premises to perform inspections.
Does not provide authority to Local organization to enforce requirements.	Establishes authority of Local organization to enforce requirements.

The attributes of a plumbing ordinance shown in Table 1 also generally apply to the Service Agreement.

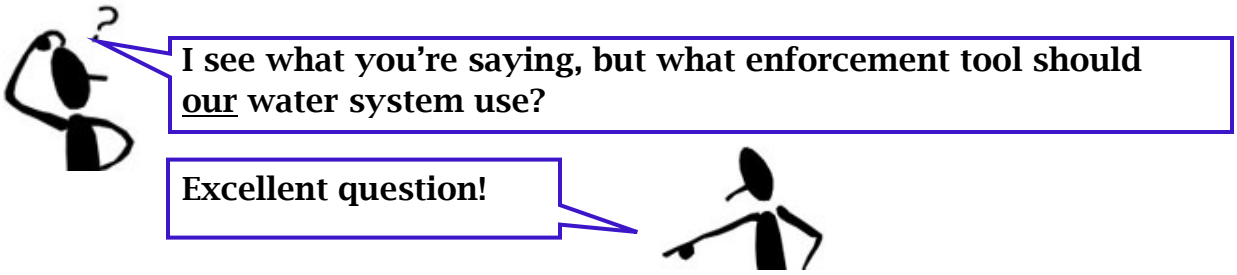

Let's take a more detailed look at the most common management/enforcement tools.

Local plumbing ordinance or plumbing regulations:

An ordinance is a formal enactment by a local government, adopted by the governing body of that government (for example, a City Council). Typically, a plumbing ordinance will contain the requirements for cross-connection control and backflow prevention that comply with state regulations and also meet local and specific needs for protecting the potable water distribution system.

The rules give any municipality the option of adopting a plumbing ordinance. Municipalities with a population of 5,000 or more are required by the State of Texas to adopt a plumbing ordinance.

Plumbing ordinances come in two flavors:

- those **with** adopted plumbing codes or regulations, and
- those **without** adopted plumbing codes or regulations.

Based on the city, plumbing regulations which contain requirements for cross-connection control and backflow prevention could be contained within a plumbing ordinance which encompasses the CCCP and all its specific requirements.

Plumbing ordinance elements

Most **plumbing ordinances**, at a minimum, include the following critical elements:

- General description section;
- Backflow prevention assembly installation, testing, and maintenance requirements;
- CSI requirements;
- Thermal expansion requirements;

- Fire hydrant protection requirements; and
- Enforcement and penalty section.

Double check the ordinance language

Before adopting a new ordinance, (or making changes) it is highly recommended that cities have the following reviews done:

- Enforceability review by legal counsel; and
- Review by authorities or departments responsible for assisting in the implementation and management of the CCCP.

Many cities will include a comment period for external stakeholders prior to adopting a plumbing ordinance. Stakeholders will often identify improvements to the language not previously thought of by the PWS. Take advantage of this.

Critical elements of the PWS's enforcement procedures

The CCCP's enforcement procedure should include decisions and documentation of:

- How many subsequent notices will be sent (after the initial notice), before the PWS takes an enforcement action;
- How long between notices;
- Use of registered mail for subsequent notices;
- Wording of notices (for example, polite reminder for the second notice, and an ultimatum for the final notice);
- For in-premises assemblies (part of internal programs)—when to inform the local administrative authority of a problem;
- When to notify the PWS's management, and/or lawyer;
- An appeal process;
- Which enforcement procedure to take for the various assessed "degrees of hazard;" and
- Penalties and assessments.

Figure 34 shows the sample plumbing ordinance template (from RG 478). A hardcopy of RG 478 can be requested from the TCEQ, or you can request the sample language in Microsoft Word format from the TCEQ's Water Supply Division by calling 512-239-4691.

Sample Plumbing Ordinance (from RG-478)

Appendix I: Sample Plumbing Ordinance

Please note that this is a sample ordinance and should not be modified or adopted without review by the public water system's legal counsel. Minor recommended changes are made in underline/~~strikeout~~.

This ordinance adds a new section to the City's Code of Ordinances.

ORDINANCE NO. _____

An ordinance of the city council of the City of _____, Texas, amending Chapter __ of the Code of Ordinances of _____, Texas, by adding a new section _____ to be entitled "Cross-Connection Control Program," providing a repeal clause and a severability clause, establishing penalties for the violation of these restrictions and provisions for their enforcement, and finding and determining that the meeting at which this ordinance is passed is open to the public as required by law.

BE IT ORDAINED BY THE CITY COUNCIL OF THE CITY OF _____, TEXAS:

SECTION 1—That Chapter ___ of the Code of Ordinances of the City of _____, Texas, be amended to add a new section _____, such section to read as follows: Section _____: Cross-Connection Control Program

a. Definitions

(1) Manual M14: The American Water Works Association's Recommended Practice for Backflow Prevention and Cross-Connection Control, current edition.

(2) TCEQ: The Texas Commission on Environmental Quality.

(3) 290 Rules: The TCEQ's rules and regulations for public water systems, which appear in Title 30, Texas Administrative Code, Chapter 290.

b. General

(1) No water-service connection shall be made to any establishment where a potential or actual contamination hazard exists unless the water supply is protected in accordance with the 290 Rules and this ordinance. The water purveyor shall discontinue water service if a required air gap or backflow prevention assembly is not installed, maintained, and tested in accordance with the 290 Rules and this ordinance.

(2) No backflow protection at the water service meter is required where an adequate internal cross-connection control program is in place.

c. Installation, Testing, and Maintenance of Backflow Prevention Assemblies

(1) All backflow prevention assemblies must be tested upon installation by a licensed backflow prevention assembly tester and certified to be operating within specifications. Backflow prevention assemblies that are installed to protect against health hazards must also be tested and certified to be operating within specifications at least annually by a recognized backflow prevention assembly tester.

(2) Backflow prevention assemblies installed on fire suppression systems must be tested by a backflow prevention assembly tester permanently employed by an approved fireline contractor.

(3) Gauges used for backflow prevention assembly testing must be tested for accuracy at least annually in accordance with the AWWA's Manual M14 or the current edition TCEQ publication RG-478 Establishing and Managing an Effective Cross-Connection Control Program Revised August 2016 53 of the University of Southern California's Manual of Cross-Connection Control. A copy of the gauge accuracy test report must be submitted to the City of _____ to demonstrate the gauge has been tested for accuracy.

(4~~3~~) A recognized backflow prevention assembly tester must hold a current license issued from the TCEQ.

d~~e~~. Customer Service Inspections

(1) A customer service inspection must be completed before the provision of continuous water service to all new construction, on any existing service when the water purveyor has reason to believe that cross-connections or other contaminant hazards exist, or after any material improvement, correction, or addition to the private water-distribution facilities.

(2) Only individuals with the following credentials shall be recognized as capable of conducting a customer service inspection:

(A) Plumbing inspectors and water-supply-protection specialists that have been licensed by the Texas State Board of Plumbing Examiners.

(B) Customer service inspectors that have been licensed by the TCEQ.

(3) The customer service inspection must certify that:

(A) No direct connection between the public drinking water supply and a potential source of contamination exists. Potential sources of contamination must be isolated from the public water system by a properly installed air gap or an appropriate backflow prevention assembly.

(B) No cross-connection between the public water supply and a private water source exists. Where an actual, properly installed air gap is not maintained between the public water supply and a private water supply, an approved reduced-pressure-zone backflow prevention assembly is properly installed and a service agreement exists for annual inspection and testing by a recognized backflow prevention assembly tester.

(C) No connection exists that allows water to be returned to the public drinking water supply.

(D) No pipe or pipe fitting that contains more than 0.25 percent lead is used for the installation or repair of plumbing at any connection that supplies water for human use.

(E) No solder or flux that contains more than 0.2 percent lead is used for the installation or repair of plumbing at any connection that provides water for human use.

(e) Irrigation Systems

(1) Any irrigation system that is connected to a public or private potable water supply must be connected through a backflow prevention assembly approved by the Texas Commission on Environmental Quality.

(2) Backflow prevention assemblies installed on irrigation systems that are classified as health hazards must be tested at least annually. Establishing and Managing an Effective Cross-Connection Control Program TCEQ publication RG-478 54 Revised August 2016

SECTION 2—REPEAL

All ordinances that are in conflict with the provisions of this ordinance are hereby repealed, and all other ordinances of the City not in conflict with the provisions of this ordinance shall remain in full force and effect.

SECTION 4—ENFORCEMENT

A violation of this ordinance is a misdemeanor and, upon conviction, any person who violates this ordinance shall be punished by a fine of not less than $_____ and not more than $_____.

Each day that one or more of the provisions in this ordinance is violated shall constitute a separate offense.

If a person is convicted of _____ or more distinct violations of this ordinance, the _____, _____, _____ shall, upon due notice to the customer, be authorized to discontinue water service to the premises where such violations occur.

Services discontinued under such circumstances shall be restored only upon payment of a reconnection charge, hereby established at $_____, and any other costs incurred by the City of _____ in discontinuing service. In addition, suitable assurance must be given to the _____, _____, or _____ that the same action shall not be repeated while the ordinance is in effect.

Compliance with this ordinance may also be sought through injunctive relief in district court.

SECTION 3—SEVERABILITY

The phrases, clauses, sentences, paragraphs, and sections of this ordinance are severable and, if any phrase, clause, sentence, paragraph, or section of this ordinance shall be declared unconstitutional by the valid judgment or decree of any court of competent jurisdiction, such unconstitutionality shall not affect any of the remaining phrases, clauses, sentences, paragraphs, and sections of this ordinance.

Optional Provisions for the Section "Installation, Testing and Maintenance of Backflow Prevention Assemblies":

All backflow prevention assemblies must be installed and tested in accordance with the manufacturer's instructions, Manual M14, or the University of Southern California's Manual of Cross-Connection Control.

Assemblies must be repaired, overhauled, or replaced whenever the assemblies are found to be defective.

Original forms recording testing, repairs, and overhaul must be kept and submitted to the City of _____ within five working days of the test, repair or overhaul of each backflow prevention assembly.

No backflow prevention assembly or device may be removed from use, or relocated, or other assembly or device substituted for it, without the approval of the City of _____.

Optional Provision for the Section "Irrigation Systems":

Backflow prevention assemblies installed on irrigation systems that are not classified as health hazards must be tested every _____ years or as required by the adopted plumbing code.

Optional Section: Fire-Hydrant Protection

An approved reduced-pressure principle backflow prevention assembly (RPBA) is be the minimum protection for fire-hydrant water meters that are being used for a temporary water supply during any construction or other uses which would pose a potential hazard to the public water supply.

(A) An RPBA must be installed if any solution other than potable water can be introduced into the system.

(B) It is the responsibility of all persons engaging in the use and rental of a fire-hydrant water meter to abide by the conditions of this article. All fire-hydrant meter rentals shall meet the current requirements of the City.

Figure 35: Sample plumbing ordinance template (from RG 478)

Plumbing codes:

The Plumbing License Law in Title 8, Texas Occupations Code (8 TOC), Chapter 1301, requires all municipalities with a population of 5,000 or greater to adopt a plumbing code; smaller municipalities and other types of PWSs may voluntarily adopt a plumbing code.

However, just adopting a plumbing code does not mean that a PWS is in compliance with TCEQ's Plumbing Ordinance regulation. This distinction is critical because the Plumbing Code generally governs all plumbing on the customer's side of the meter (in premise plumbing).

The two plumbing codes that are authorized to be adopted in the state of Texas by the Texas State Board of Plumbing Examiners (TSBPE) are the:

- **International Plumbing Code**
- **Uniform Plumbing Code**

These codes are revised every <u>three years</u>. Depending on the particular code and year of revision, the requirements related to cross-connection control and backflow prevention in the code may differ from TCEQ rules.

Very Important: Plumbing code limitations

While the Plumbing Codes contain some very important cross-connection control and backflow prevention requirements, they do not address the authority of a Cross-Connection Control Program and are not specific to a local municipality. The plumbing ordinance regulation provides the PWS the opportunity to develop cross-connection control and backflow prevention requirements specific to its distribution system and gives authority to the Cross-Connection Control Program.

Enforcement policies should be consistent with the plumbing code that has been adopted.

Retail Service Agreements:

Some PWSs do not have the regulatory or governmental structure to adopt a plumbing code which requires backflow protection for hazards contained **within** a site. These systems must use signed Retail Service Agreements with their customers which contain provisions to protect against backflow and cross connections, and also provide for enforcement.

We recommend that you review and update, if needed, your Retail Service Agreement to include the latest requirements such as the new EPA's allowable lead levels that went into effect January 4, 2014.

A sample service agreement is provided in Figure 35 below.

A PWS may use the service agreement in the TCEQ's rules or create their own.

Either way, the service agreement should be tailored to address the needs of each specific water system but must include the critical elements discussed in Section 3.

A few critical elements of an effective service agreement include:

- ***Right of entry:*** The service agreement must give PWS staff, particularly customer service inspectors, the authority to enter facilities in order to evaluate cross-connections, backflow risks, plumbing materials, and internal backflow prevention programs (where present).
- ***Lead ban:*** The service agreement must have provisions for prohibiting lead in excess of the federal standards in the plumbing materials, as demonstrated by the lead test or the labeling of the plumbing.
- ***Internal Protection***: The service agreement should have provisions to protect people within a site.

Very Important: Deviations must include critical elements

The water system must ensure that if it uses a format that deviates from the template provided by the TCEQ, then at a minimum, it must include the critical elements as described below.

Also, please ensure that lead-ban information matches the most current regulations as developed by the EPA and promulgated by the TCEQ (listed below as one of the critical elements).

For example, backflow protection may be provided at the meter as well as **within** the site to protect people at large gatherings such as:

- Schools;
- Religious gatherings;
- Livestock events;
- Resorts (Dude ranches or areas for company gatherings);
- Festivals; or
- Other occasions for large gatherings.

- ***Enforcement:*** A very important part of a service agreement is enforcement. The service agreement must give the PWS the ability to enforce the requirements for cross-connection control and backflow prevention. This is typically implemented through notification letters with deadlines and increasing fines up to termination of service.

A retail service agreement should be reviewed by the PWS's legal counsel and supported by the authority having jurisdiction.

Some PWSs do not have the regulatory or governmental structure to adopt plumbing ordinances or regulations. They must rely on Retail Service Agreements, a contractual agreement between the customer and the PWS, which has the purpose of protecting the water system distribution from contamination hazards related to backflow events and cross-connections.

Retail Service Agreement details

The TCEQ has developed and included a template Retail Service Agreement, shown below in Figure 35 (from **Appendix B** in TCEQ RG-195 **"RULES AND REGULATIONS FOR PUBLIC WATER SYSTEMS.")**

Don’t forget! Get the autographs!

If your PWS uses a plumbing ordinance or a Service Agreement, they must be formally executed (signed) by both the appropriate PWS officials and customers.

A similar process is required after any revisions or amendments. This co-signed document is a de facto contract.

Service Agreement

Figure: 30 TAC §290.47(b) downloaded from Texas Secretary of State web site January 12, 2019. To obtain most recent version, visit that website at: texreg.sos.state.tx.us/public/

Appendix B: Sample Retail Service Agreement

I. PURPOSE. The NAME OF WATER SYSTEM is responsible for protecting the drinking water supply from contamination or pollution which could result from improper system construction or configuration on the retail connection owner's side of the meter. The purpose of this service agreement is to notify each customer of the restrictions which are in place to provide this protection. The public water system enforces these restrictions to ensure the public health and welfare. Each retail customer must sign this agreement before the NAME OF WATER SYSTEM will begin service. In addition, when service to an existing retail connection has been suspended or terminated, the water system will not re-establish service unless it has a signed copy of this agreement.

II. RESTRICTIONS. The following unacceptable practices are prohibited by State regulations.

A. No direct connection between the public drinking water supply and a potential source of contamination is permitted. Potential sources of contamination shall be isolated from the public water system by an air-gap or an appropriate backflow prevention device.

B. No cross-connection between the public drinking water supply and a private water system is permitted. These potential threats to the public drinking water supply shall be eliminated at the service connection by the installation of an air-gap or a reduced pressure-zone backflow prevention device.

C. No connection which allows water to be returned to the public drinking water supply is permitted.

D. No pipe or pipe fitting which contains more than 0.25% lead may be used for the installation or repair of plumbing at any connection which provides water for human use.

E. No solder or flux which contains more than 0.2% lead can be used for the installation or repair of plumbing at any connection which provides water for human use.

III. SERVICE AGREEMENT. The following are the terms of the service agreement between the NAME OF WATER SYSTEM (the Water System) and NAME OF CUSTOMER (the Customer).

A. The Water System will maintain a copy of this agreement as long as the Customer and/or the premises is connected to the Water System.

B. The Customer shall allow his property to be inspected for possible cross-connections and other potential contamination hazards. These inspections shall be conducted by the Water System or its designated agent prior to initiating new water service; when there is reason to believe that cross-connections or other potential contamination hazards exist; or after any major changes to the private water distribution facilities. The inspections shall be conducted during the Water System's normal business hours.

C. The Water System shall notify the Customer in writing of any cross-connection or other potential contamination hazard which has been identified during the initial inspection or the periodic reinspection.

D. The Customer shall immediately remove or adequately isolate any potential cross-connections or other potential contamination hazards on his premises.

E. The Customer shall, at his expense, properly install, test, and maintain any backflow prevention device required by the Water System. Copies of all testing and maintenance records shall be provided to the Water System.

IV. ENFORCEMENT. If the Customer fails to comply with the terms of the Service Agreement, the Water System shall, at its option, either terminate service or properly install, test, and maintain an appropriate backflow prevention device at the service connection. Any expenses associated with the enforcement of this agreement shall be billed to the Customer.

CUSTOMER'S SIGNATURE: _____

DATE: _____

Figure 36: Retail service agreement template (from 30 TAC §290.47(b), in RG-195 Appendix B)

The name is less important than the contents. Your PWS's agreement with customers may be called a "Service Agreement," "Customer Service Agreement," "Retail Service Agreement," or something else. Regardless of what you call it, it should include all the critical elements.

Systems should consider providing a Spanish-language copy of the Service Agreement, and other languages if there are other non-English proficient sub-populations.

Sanitary Control

In order to best protect the potable water supply, sanitary control of the water must be established. Sanitary control of the drinking water is referenced in several regulations. Usually, the public water system (PWS) delivering water has sanitary control, but not always.

Some simple examples include:

- If a building is in the City limits of a City with a plumbing ordinance for buildings inside the City limit, that City has sanitary control.
- If a factory is a PWS, the Owner of the factory has sanitary control.
- If a PWS customer has signed a Service Agreement (that meets TCEQ standards), the customer is under the sanitary control of the PWS.

TCEQ rules emphasize that the use of a backflow protection at the meter is considered **additional protection** and doesn't **negate** the **need** or **use** of backflow protection on internal hazards.

The Rule:

§290.44(h)(5) states:

> *"The use of a backflow prevention assembly at the service connection shall be considered as **additional** protection and shall not negate the use of backflow protection on internal hazards as outlined and enforced in the local plumbing codes."*
> *(editorial emphasis)*

Additionally, the TCEQ's overall rules for how connections may be made provide additional information and support of the CCCP requirements.

For example, in the regulation that addresses interconnections between two water systems, it is required that the responsibility for the sanitary control of the water be established. This will clearly show where one system's sanitary control ends and the other begins.

The Rules related to interconnections:

§290.44(g)(1) States:

> *"Each proposal for a direct connection between public drinking water systems under separate administrative authority will be considered on an individual basis."*

§290.44(g)(1)(A) States:

> *"Documents covering the responsibility for **sanitary control** shall accompany the submitted planning material."*

§290.44(g)(1)(B) States:

> *"Each water supply shall be of a safe, potable quality."*

§290.44(g)(2) States:

> *"Where an interconnection between systems is proposed to provide a second source of supply for one or both systems, the system being utilized as a second source of supply must be capable of supplying a minimum of 0.35 gallons per minute per connection for the total number of connections in the combined distribution systems."*

For large connections like commercial and industrial sites, determining who has sanitary control is very important because these entities often use a lot of water for different processes and have relatively large populations. Large connections are more likely to have hazards than residential connections, for example: hospitals or factories.

If the responsibility for the sanitary control of the water is not determined, then the potable water supply at that site—as well as the potable water supply upstream and downstream—are vulnerable to contamination. Therefore, §290.44(h)(2) requires appropriate backflow prevention if the PWS does **not** retain sanitary control of the water once it enters that site.

The plumbing ordinance regulation holds the entity retaining sanitary control of the water responsible for protection from backflow and requires that entity to establish local rules to protect the potable water supply.

These rules show how important it is to establish who has sanitary control of the water. That should be documented so that entities providing and receiving the water know their responsibilities and can take the appropriate actions to protect the potable water supply.

Section 4—Activities

Service Agreement

If this DAM is being presented at a specific PWS, review your system's Service Agreement. Does it include the critical elements as identified in the example Retail Service Agreement in Figure 34?
If not, what is missing?

For a diverse group, look at the TCEQ's Retail Service Agreement in Figure 34. Can you identify the critical elements in that document?

Ordinance

If the DAM is being presented at a system that has a local ordinance, review that to see whether it establishes the PWS's authority over potential cross connections in the system's service area.

For a diverse group, look at the TCEQ's sample plumbing ordinance language in Figure 35. Can you identify the critical elements in that document?

Follow-up

Are there any items from this Section that should go on your 'to-do list,' or Follow-Up Form?

Do you have an ordinance and/or Retail Service Agreement? If so, does it contain all the required elements? If not, what steps do you need to take to get the required authority adopted by your PWS?

Section 4 Review Questions

- Who must adopt a plumbing ordinance?
    1. Every public water system.
    2. Cities over 1,000 population.
    3. Businesses
    4. Cities over 5,000 population.
- What might be some elements of a plumbing ordinance?
    1. Require backflow protection if a potential hazard exists on a property.
    2. City promise to pay for backflow preventer, testing, and maintenance.
    3. Let businesses refuse entry to City Inspectors.
    4. Allow City to cut off water for noncompliance.
- What are some critical elements of a Retail Service Agreement?
    1. Right of entry
    2. Lead ban
    3. Copper ban
    4. Disconnect for noncompliance

Notes

Section 5: Customer Service Inspections

Note: The complete RG 206 "**CUSTOMER SERVICE INSPECTIONS—A GUIDE FOR PWSS**" is attached at the end of this Section.

Section 5—Learning objectives

During this Section, the student will:

- Become familiar with RG 206 "**CUSTOMER SERVICE INSPECTIONS—A GUIDE FOR PWSS**"
- Learn the scope and critical elements of a CSI;
- Learn who has the appropriate credentials to perform a CSI; and
- Understand when a CSI should be performed.

Basics of Customer Service Inspections

Customer-Service Inspections (CSI) are the keystone of managing any successful CCCP and are extremely useful in identifying known or potential hazards in your potable water distribution system.

The Rule: What is a Customer Service Inspection (CSI)?

§290.46(j)(4) states:

> *"A customer service inspection is an examination of the private water distribution facilities for the purpose of providing or denying water service.*
> *This inspection is limited to the identification and prevention of cross-connections, potential contaminant hazards, and illegal lead materials.*
> *The customer service inspector has no authority or obligation beyond the scope of the commission's regulations.*
> *A customer service inspection is not a plumbing inspection as defined and regulated by the Texas State Board of Plumbing Examiners (TSBPE).*
> *A customer service inspector is not permitted to perform plumbing inspections…the customer service inspector shall report any violations immediately to the local entity's plumbing department."*

Timing for CSIs

Part of your CCCP should be a schedule for when CSIs are scheduled.

CSIs should be conducted every time one of the following situations exist:

- New construction
- Existing connections where contaminant hazards are suspected
- Major renovations, especially those related to plumbing additions or alterations
- Change of ownership or billing customer
- When there is reason to believe a hazard exists

Very Important: New construction

A CSI is required at all new service connections, existing service connections where the PWS has reason to believe that cross-connections or other potential contamination hazards exist, and existing service connections where a material improvement, correction, or addition has been made to the private water distribution facilities [30 TAC §290.46(j)].

DO NOT use the initial CSI as a means to an end. Water system officials should constantly be on the lookout for potential contamination hazards in their distribution system.

What initially turned out to be a low- or no-hazard connection, may quickly become a **HEALTH-HAZARD** connection resulting from improper plumbing practices.

The TCEQ has developed a template Customer Service Inspection (CSI) form which is shown at the end of this Section.

Important: Correct CSI form

The water system must ensure that if it uses a format that deviates from the template provided by the TCEQ, then at a minimum it must include the critical elements of the form. Additionally, the form should be submitted to the TCEQ for their final approval.

Review the rule language to gain an understanding of the times when CSIs are absolutely necessary.

The Rule: When can a CSI be done and how is it documented?

§290.46(j) states:

> *"Customer service inspections:*
>
> *A customer service inspection certificate shall be completed prior to providing continuous water service to new construction, on any existing service either when the water purveyor has reason to believe that cross-connections or other potential contaminant hazards exist, or after any material improvement, correction, or addition to the private water distribution facilities.*
>
> *Any customer service inspection certificate form which varies from the format found in 290.47(d) of this title must be approved by the executive director prior to being placed in use."*

Credentials for performing CSIs

The CSI inspector is trained and licensed to examine private water-distribution facilities in order to determine the presence of cross-connections, potential contamination hazards, and illegal materials containing lead and copper, but is not permitted to perform plumbing inspections.

A CSI can be conducted by a:

- TCEQ licensed CSI inspector,
- A Plumbing Inspector, or
- A licensed Plumber with a Water Supply Protection Specialist endorsement.

The last two are licensed by the Texas State Board of Plumbing Examiners.

The results of the customer-service inspection will identify if any cross-connections or actual/potential contamination hazards are present and determine if backflow prevention is required at the site.

The Rule: Who can conduct a customer service inspection certification?

290.46(j)(1) states:

> *"Individuals with the following credentials shall be recognized as capable of conduction a customer service inspection certification."*

290.46(j)(1)(A) states:

> *"Plumbing Inspectors and Water Supply Protection Specialists licensed by the Texas State Board of Plumbing Examiners (TSBPE)."*

290.46(j)(1)(B) states:

> *"Customer service inspectors who have completed a commission-approved course, passed an examination administered by the executive director, and hold current professional license as a customer service inspector."*

Critical elements of CSIs

TCEQ's RG 206 is inserted in its entirety on the following pages. That guidance document provides a detailed description of the purpose and elements of a CSI. A few critical elements are also discussed below.

Note that the version of RG-206 was inserted from the version available when this course manual was published. You should visit the TCEQ web site to download the current version before referencing it.

Lead ban

One important difference between a plumbing inspection and a CSI is testing to see if there are unallowable lead-containing materials in premise plumbing. Lead is unsafe in drinking water at any level. The CSI includes swabbing materials and checking manufacturer's marks to ensure that the materials meet the EPA lead ban.

RG 206 CSIs: A Guide for PWSs

Water Supply Division
RG-206 • Revised May 2016 – DRAFT DO NOT CITE

Customer Service Inspections: A Guide for Public Water Systems

Introduction

A customer service inspection (CSI) is crucial in protecting the potable-water supply. It is a direct inspection of the private water-distribution system to ensure that the potable water is not vulnerable to contamination. CSIs are required by Title 30 of the Texas Administrative Code (30 TAC), Subsection 290.46(j). This very important rule extends the authority of the public water system (PWS) beyond the meter.

All the rules in 30 TAC Chapter 290, Subchapter D, are administered by the Texas Commission on Environmental Quality (TCEQ).

Who Should Read This Guide?

This guide is intended for people who work in a PWS in Texas—for example, a water district, a water supply corporation, a city, or an investor-owned utility (IOU). It will also be valuable to customer-service inspectors.

In the text, "you" refers to the PWS and its staff members. The term *public water supplier* is also used to mean 'PWS'. Members of the general public—customers of such water systems—will also find answers in this guide to many questions they may have about CSIs. This publication is for general guidance only and does not take the place of the rules and regulations governing CSIs.

Customer Service Inspections

The purpose of a CSI is to determine if water service can be safely provided to a site without the risk of contamination. This determination is based on an inspection of the private water-distribution facilities to identify and prevent:

Cross-connections. A physical connection between a public water system and either another supply of unknown or questionable quality, any source which may contain contaminating or polluting substances, or any source of water treated to a lesser degree in the treatment process.

Potential contamination hazard. A condition which, by its location, piping or configuration, has a reasonable probability of being used incorrectly, through carelessness, ignorance, or negligence, to create or cause to be created a backflow

condition by which contamination can be introduced into the water supply. Examples of potential contamination hazards are:

- bypass arrangements
- jumper connections
- removable sections or spools
- swivel or changeover assemblies

Illegal lead materials. Any pipe, pipe fitting, plumbing fixture, or flux used in the installation or repair of any PWS, residential or non-residential facility, which provides water for human consumption and is not lead-free. "Lead-free" means the wetted surface cannot contain greater than a weighted average of 0.25 percent lead and the solder cannot contain more than 0.2 percent lead.

Only after a site passes the CSI can a PWS safely provide or continue providing water service. The role of the customer service inspector is critical to protecting the potable water supply.

One of the key aspects of the CSI is the requirement to survey the internal plumbing of a facility. The TCEQ's CSI regulation states that a CSI is, "an examination of the private water distribution facilities for the purpose of providing or denying water service. This inspection is limited to the identification and prevention of cross-connections, potential contaminant hazards, and illegal lead materials." This means the CSI inspector is required to enter a commercial/industrial facility or a private residence to examine the internal plumbing for compliance with the state lead ban required by the federal lead prohibition and ensure that there are no potable water connections to either an unknown substance or auxiliary water source that could result in contaminating not only the internal plumbing of the site but also the potable water distribution system.

This can pose a challenge both to the inspector and to the occupants on-site. For example, a manufacturer may have proprietary processes or equipment that must be protected. People in a private residence may not be comfortable with providing internal access for a CSI inspection of their residence For these reasons, it is very important that the PWS and/or the inspector educate their customers on the requirements for a CSI, the purpose of a CSI, and the public health consequences of backflow.

In the event that access to a facility or residence is denied, the CSI inspector should survey the those components of the site that he has access to and document on the CSI certificate that access was denied. The PWS then must utilize their local Plumbing Ordinance and enforcement capabilities to assure that the CSI requirements are met.

When are CSIs required?

In the following situations:

- When there is new construction. A plumbing inspection is usually conducted during construction. A licensed plumbing inspector is also qualified to conduct a CSI so usually the PWS conducts a CSI at the same time as the plumbing inspection. The official TCEQ CSI form (TCEQ-20699) must be used. This form is available on the TCEQ website at <www.tceq.texas.gov/search_forms.html>.
- When there is a material improvement, correction, or addition to the private water distribution system—the plumbing and appurtenances on the customer's side of the meter. Examples of work that requires a CSI include:
  - significant changes to the existing plumbing (expansion, reduction, reconfiguring)
  - a customer request for installation of a larger meter indicating changes in water use
  - drilling a private well
  - installation of a rainwater-harvesting system
- When the water supplier believes that a cross-connection or other potential contamination hazard exists. In such a case, the water supplier should communicate the concerns it has for the safety of the potable-water supply to the customer.

When are CSIs not required?

A CSI is *not* required for:

- Existing connections where there have been no significant modifications as stated above.
- Temporary connections and connections involving construction. However, the connection may require backflow prevention.
- Transfer of service (change in occupancy).
- Mobile homes, manufactured homes, and recreational vehicles (RVs). For additional hazards posed by these connections, see "Inspections of RVs and Mobile Homes," below.

What types of cross-connections are identified in a customer service inspection?

There are two types:

- **Direct cross-connection**—one that will allow backflow due to back pressure or back siphonage. Typically direct cross-connections are hard plumbed and permanent.
- **Indirect cross-connection**—one that will allow backflow due to back siphonage only. Indirect connections are often temporary, such as a water hose in a bucket.

Some examples of cross-connections include water supply lines to:

- water-cooling towers
- carbonated-beverage (soda) dispensers
- mortuary equipment
- fire-suppression systems
- landscape-irrigation systems
- watering troughs
- chemical soap-mixing units

Who can perform a customer service inspection?

Customer service inspections may only be conducted by the following three licensed professionals:

- *Customer Service Inspectors licensed by the TCEQ*. For information on these licensees, you may call the TCEQ's Occupational Licensing Section, 512-239-6133, or visit its Web page at <www.tceq.texas.gov/licensing>.
- *Plumbing Inspectors licensed by the Texas State Board of Plumbing Examiners (TSBPE)*. See "Where to Find More Information."
- *Licensed Plumbers who also have a "water supply protection specialist" endorsement on their license*. These professionals are also licensed by the TSBPE.

To search the TCEQ website for licensed customer service inspectors in your area, go to <www.tceq.texas.gov/goto/lic_reg_search/>.

The TCEQ requires that PWSs retain copies of CSIs for at least 10 years. Typically, after a CSI, the inspector gives a copy of the CSI certificate to the customer and either the original or a copy to the plumbing- or building-inspection department of the local water utility, and the inspector keeps a copy for himself or herself.

At a small system, with no plumbing department, building department, or inspection department, the PWS must retain the CSI forms with other documentation of compliance.

As a PWS, what are our options for ensuring CSIs are conducted?

You have several options, including:

- Giving a list of licensed customer service inspectors in the area to the customer, who then selects and hires an inspector.
- Enlisting your own personnel who have the required license to conduct the CSIs.
- Hiring independent, third-party contractors with the appropriate license to conduct the CSIs.

Where does the CSI fit in a cross-connection control program?

The CSI is the keystone of your Cross-Connection Control Program. Once an authority is in place to implement a program (see *Establishing and Maintaining an Effective Cross-Connection Control Program*, TCEQ publication RG-478), the CSI is the tool used to identify sites that have unprotected cross-connections, contamination hazards, or unacceptable lead levels in the plumbing. This sets in motion the primary function of the staff in your cross-connection control program: to protect the potable-water supply.

The regulation requiring CSIs extends the authority of the PWS past the meter and into the site. Past the meter, other authorities primarily have jurisdiction, such as:

- Plumbing-inspection department, whose primary tool of enforcement is the adopted plumbing code
- the State Fire Marshal's Office, whose primary tool of enforcement is the Texas Insurance Code

For this reason, the TCEQ CSI regulation [30 TAC 290.46(j)] states that those cities, villages, and towns that have passed an ordinance adopting one of the plumbing codes recognized by the TSBPE (the International or Uniform Plumbing Code) must report any violations identified in a CSI to the local authority's plumbing-inspection department—crucial to a cross-connection control program.

In this way, the CSI ensures that backflow is prevented smoothly from the customer's meter to the farthest flowing tap of potable water. The CSI connects the authority of the PWS with the jurisdiction of the plumbing-inspection department by reporting the findings of a CSI to that department.

For rural water systems in jurisdictions that have not adopted a plumbing code and therefore do not have a plumbing-inspection department, a customer service agreement between the PWS and its customers must be in place to support its requirement for CSIs and backflow prevention.

What are the record-keeping requirements for CSI certificates?

You are required to keep the CSI certificates for at least 10 years. A CSI certificate documents the presence or absence of actual or potential contamination hazards at a specific place and time. This makes them especially valuable in a backflow event.

The CSI certificate as well as other records required in a Cross-Connection Control Program will allow you to show that you were aware of the contamination hazard, that you required the installation of a backflow prevention assembly, and that the assembly was working correctly at the time of its last test. This will show that, the PWS was doing what it should to protect the potable water supply.

For defense of potential liability, we recommend **always** having current CSI certificates on file or stored electronically for sites that are connected to the PWS distribution system.

How many customer service inspections are required?

This crucial aspect of protecting the drinking water depends on the local jurisdiction. There are occasions, such as when the PWS is relying solely on adequate internal cross-connection control, when periodic CSIs are recommended to determine the adequacy of that program. For a site that uses potable water extensively and in many different ways, more frequent inspections might be prudent.

The CSI regulation [30 TAC 290.46(j)] allows the flexibility for you to require more frequent CSIs by stating that a CSI can be conducted when the PWS "has reason to believe" there might be a cross-connection or some other potential contamination hazard. This requirement for more frequent CSIs should be supported by a local ordinance, tariff, or customer service agreement.

Cross-Connection Control and Backflow Prevention

In checking for cross-connections, the inspector will also determine if there is a need for a backflow prevention assembly. *Backflow* means the undesirable reversal of flow of water through a cross-connection to an actual or potential contamination source. One way to prevent backflow is to install a backflow prevention assembly.

What are potential contamination hazards?

PWSs vary greatly as do their local economies and the communities they supply water to. The potential threats to a drinking water supply also vary greatly and, ultimately, only the local public water supplier will know which connections pose a contamination threat. Some typical hazards include, but are not limited to:

- chemical plants
- hospitals
- mortuaries
- medical, dental, and veterinary clinics
- laboratories
- marinas
- auxiliary water supplies
- private wells
- rainwater-harvesting systems
- creeks and lakes used for landscape irrigation

Who can test and repair backflow prevention assemblies in Texas?

Only backflow prevention assembly testers who have been licensed by the TCEQ can test and repair assemblies on any domestic, commercial, industrial, or irrigation service in Texas. For information about these licenses, please contact the TCEQ's Occupational Licensing Section, 512-239-6133, or visit its webpage at <www.tceq.texas.gov/licensing>.

Should a backflow prevention assembly be installed if no known hazard exists?

It is not necessary to install a backflow prevention assembly if no hazard has been identified. Sometimes PWSs will require the installation of single-check or dual-check valves at every service connection regardless of the absence or presence of a hazard. These devices are not testable, will not work when they become fouled, create a closed system, and therefore do not meet the requirements for premises isolation. The TCEQ does not recommend this practice.

What is a closed system?

A *closed system* is created when a backflow prevention assembly or a check valve (which is not a backflow preventer) is installed at a customer's service connection. As expected, the backflow prevention assembly or check valve does not allow backflow into the PWS distribution system.

What is thermal expansion?

Thermal expansion is a result of heating water. When water is heated, it expands. Normally, this heated, expanding water would backflow into the distribution system to a certain point. Because potable water is backflowing, there is no contamination hazard. This type of backflow occurs frequently and is a normal function of the water system. Backflow prevention assemblies and other one-way valves installed at a customer's service connection eliminate a path for expanded water to flow back to the distribution system, resulting in increased pressure on the customer's side of the meter. This increase in pressure can result in:

- pressure surges
- dripping faucets
- chronic or continuous dripping of temperature and pressure-relief valves
- mechanical problems with water-heating tanks, including distortion and rupture

A PWS that requires the installation of a backflow prevention assembly at a customer's service connection should take the following steps to ensure the customer is protected from the potential problems associated with thermal expansion:

- Notify the customer that a closed system has been created and inform the customer of the potential problems associated with thermal expansion.
- Where a plumbing code has been adopted, inform the customer of plumbing-code requirements for closed systems, which may include installation of a pressure-relief valve.
- Where a plumbing code has not been adopted, inform the customer about thermal-expansion tanks and pressure-relief devices that can be installed to mitigate the potential problems associated with thermal expansion.

What is the difference between premises isolation and internal cross-connection control?

- *Premises isolation, also referred to as "containment,"* uses backflow prevention at the metered connection to the water main. This strategy protects the potable-water supply at the meter, but leaves the people on-site vulnerable to a backflow event.
- *Internal cross-connection control* requires backflow prevention assemblies on all cross-connections located within the customer's site. In this way, the water supply and the people on-site are protected.

A customer service inspection is a key part of a water system's cross-connection control program. An effective program will protect people from backflow by practicing **both** containment and internal cross-connection control.

The authority of the PWS in conjunction with the authorities having jurisdiction on the customer's side of the meter, such as the plumbing-inspection department, will mandate the installation of backflow prevention assemblies at the meter and at all cross-connections within the site.

Inspections of RVs and Mobile Homes

How can a water supplier protect against backflow at a RV park?

RV parks have a transient population. People from many different places, in many different RVs, and in many different conditions pull in and need to connect to the potable water supply.

Most RVs have two types of waste-holding tanks: one (the blackwater tank) holds the waste from the toilet and the other (the graywater tank) holds the waste from the bathtub or shower, wash basin, and kitchen sink. These are emptied by connecting them to a large hose at the dump station of the RV Park.

The problem arises when owners of RVs need to flush and clean the waste from the holding tanks that remains after emptying the tanks. They use one of several types of accessories to flush or rinse the tanks, all of which connect to the potable-water supply through a hose. This creates a direct cross-connection to a very toxic contamination threat.

If rinsing out the blackwater or graywater tanks creates back pressure, then a hose-bibb vacuum breaker is not the correct backflow preventer to use. In any case, we recommend the use of a more robust backflow prevention assembly, such as the reduced pressure zone backflow prevention assembly (RPZ).

This connection between the PWS and blackwater and graywater tanks is a threat to the potable-water distribution systems of the RV park and the PWS in general. Public water suppliers should:

- Perform periodic CSIs of RV parks that are within their service area to determine that the backflow preventers have not been compromised and no new cross-connection has been made.

- Educate managers of RV parks about blackwater-tank flushing devices and the contamination threat they pose.
- Discourage the use of Y hose adapters, which enable an RV owner to establish a cross-connection from a potable-water supply to the RV park **and** the potable water system of the RV to the blackwater and graywater tanks.

What are the requirements for customer service inspections at mobile-home parks?

You are **not** required to conduct a customer service inspection for a mobile home entering a mobile-home park **unless** you suspect a cross-connection or contamination hazard. This standard also applies to mobile homes placed on an individual lot.

Manufactured homes are required to comply with proper plumbing standards under the Manufactured Housing Construction and Safety Standards that are enforced by the federal Department of Housing and Urban Development. These standards regulate the lead content in the plumbing and cross-connections within the home.

How can a water supplier protect against backflow at a mobile-home park?

As with other connections, the PWS may protect the potable-water supply by either premises isolation or internal protection. Even though the home itself may have appropriate backflow prevention, the use of water outside the home may pose a hazard.

What are the standards for lead in pipes and solder?

As of January 4, 2014, pipe or pipe fittings that contain more than 0.25 percent lead or solders and flux that contains more than 0.2 percent lead is prohibited [30 TAC 290.44(b)(1)].

What about homes built before July 1, 1988?

Before July 1, 1988, the lead ban was not enforced. This means there are existing sites that have lead in the plumbing.

What about homes built after July 1, 1988, but before January 4, 2014?

The lead ban was enforced beginning July 1, 1988 so there should be no sites built after that date with a lead content in the plumbing greater than 8.0 percent or lead in the solder and flux greater than 0.2 percent.

What about homes built after January 4, 2014?

The allowable lead level in plumbing was lowered from 8.0 percent to 0.25 percent. The level for the solder and the flux remained the same at 0.2 percent.

If, during a CSI, the lead test indicates there is lead in the plumbing, then the site should be included in the PWS's monitoring plan and the list of sites to be used for sampling lead and copper. If the lead sampling indicates that levels exceed the allowable lead content in the water, then the PWS must determine if the plumbing must be replaced or the water corrosivity adjusted so that the water is not leaching lead from the plumbing.

To update and add an address to the PWS's sampling pool, complete the Lead-Copper Sample Site Collection Pool and Materials Survey (form TCEQ-20467) and attach a copy of the CSI. Forms are on the TCEQ Web page on lead and copper in drinking water at <www.tceq.texas.gov/goto/lead-copper>.

For more information on lead in the potable water supply, please contact the TCEQ Lead and Copper Program at 512-239-4691.

How many tests for lead solder must be performed?

The number of tests depends on different factors such as the size of the facility, age, renovations, etc. For example, at a typical residence, it may be acceptable for the customer service inspector to conduct just one lead test. If the inspector is at a very large site, many lead tests may be needed at key locations throughout the site.

Do TCEQ rules require a PWS to adopt a plumbing code?

No. However, TCEQ rules **do** require a PWS to adopt an adequate plumbing ordinance, regulations, or a service agreement with provisions for proper enforcement to ensure that neither cross-connections nor other unacceptable plumbing practices are permitted [30 TAC 290.46(i)].

Should customer service inspections be covered in local rules and tariffs?

Yes. Local rules, ordinances, tariffs, or service agreements should at least grant the licensed customer service inspector authority to enter a customer's premises to check for:

- cross-connections,
- illegal amounts of lead in plumbing, and
- contamination hazards.

These local rules must also have provisions for enforcement, especially in the case of a cross-connection to a health hazard. The penalties should include the option of termination of service.

Who pays for the customer service inspection, and who sets the fee?

A PWS that requires a CSI by its own employees, or provides this service as part of its business, may:

- charge a fee established by the PWS and approved by its governing body—or established by the TCEQ in the case of an IOU, or

- perform the service at no initial cost and then recoup the expenses through rates or fees.

If a PWS requires the customer to arrange for a CSI to be conducted, the PWS must:

- ensure that the CSI is conducted by a qualified professional
- ensure that it received the original CSI certificate or a copy

In this case, payment for the CSI is directly between the customer and the customer service inspector.

Can an IOU or its employees charge an inspection fee if it is not in its approved tariff?

No.

How are requirements for cross-connection control and backflow prevention enforced?

Any provisions for enforcement must be clearly stated in the legal document (ordinance, tariff, customer service agreement) granting the water supplier authority to implement a cross-connection control program.

Typically, enforcement begins with documentation that there is a cross-connection or a missing backflow prevention assembly. Once that is established, the PWS sends a letter to the site that states the violating condition, the corrective action, a penalty for noncompliance, and a deadline (60 days, for example). If the deadline is not met, a second letter can be sent with similar information, but with higher penalties and a shorter deadline (30 days, for example). If this second deadline is not met, a third letter may be sent with similar information including language indicating termination of service if this third, shorter deadline (seven days, for example) is not met.

This process documents that the water system was aware of the contamination threat, required the customer to install an appropriate backflow prevention assembly, described the consequences for noncompliance, and gave the site the time necessary to correct the plumbing.

There are situations where the discovered cross-connection is to a health hazard that presents an imminent threat to the public health. In that case, the water system does not have the time to issue a series of letters and must **immediately** eliminate the cross-connection or install the appropriate backflow prevention assembly, or else discontinue water service.

When can a water supplier deny service to a customer?

The CSI regulation has a provision for immediate termination of service when an unprotected cross-connection to a health hazard poses an imminent threat to the public health. Service can only be restored when the health hazard has been eliminated, or the potable-water supply has been protected with the appropriate backflow prevention assembly.

There are other cases when the PWS may consider termination of service:

For new customers the PWS may withhold connecting to a site until the site passes a CSI.

For existing customers, if there is reason to believe a cross-connection has been made at a site, and the customer refuses inspection, the PWS may terminate service with notice. You should make every effort to communicate the issues to the customer in order to protect the potable-water supply.

Options for Customers in Dispute Resolutions

Customers of PWSs who dispute the results of a CSI or the need to conduct a CSI may appeal to the PWS's governing body. For example, the customer should appeal to the city council for city-owned systems or to the board of directors for district water systems and water-supply corporations. If the system is an IOU, the customer should appeal to the Public Utility Commission by calling 888-782-8477 or visiting its website at <puc.texas.gov/>

Where should a customer report improper plumbing practices?

Customers should report improper plumbing practices or inspections by a licensed plumber to the TSBPE at 800-845-6584.

Where to Find More Information

To contact the TCEQ

By phone:

Water Supply Division, 512-239-4691

Occupational Licensing Section, 512-239-6133

Publications, 512-239-0028

By mail:

Water Supply Division, MC 155
TCEQ
PO Box 13087
Austin TX 78711-3087

On the Web:

<www.tceq.state.tx.us/goto/pws/>

For *Rules and Regulations for Public Water Systems* (TCEQ publication RG-195), go to <www.tceq.texas.gov/publications/rg/rg-195.html>

For information about the TCEQ's cross-connection control program, go to <www.tceq.state.tx.us/goto/ccc/>.

To contact the TSBPE

By phone: 800-845-6584

On the Web: <www.tsbpe.state.tx.us>

To purchase a copy of a state-approved plumbing code

International Plumbing Code

International Code Council Store
11711 West 85th Street
Lenexa KS 66214
800-786-4452
<www.iccsafe.org>

Uniform Plumbing Code

IAPMO Order Desk
5001 East Philadelphia Street
Ontario CA 91761
800-854-2766
<www.iapmostore.org>

Other Sources of information about cross-connection control:

American Society of Sanitary Engineering

ASSE International Office
901 Canterbury, Suite A
Westlake, OH 44145
440-835-3040

American Water Works Association

6666 West Quincy Ave.
Denver CO 80235-3098
800-366-0107

Foundation for Cross-Connection Control and Hydraulic Research

University of Southern California
KAP-200 University Park, MC-2531
Los Angeles, CA 90089-2531
866-545-6340

Information about lead

Please visit the TCEQ Lead and Copper Program Web page at:
<www.tceq.texas.gov/goto/lead-copper>

Figure 37: RG-206 "CSIs: A guide for PWSs."

Appendix D: Customer Service Inspection Certificate (Form TCEQ-20699)

This is a sample only. For the official form please go to <www.tceq.texas.gov/goto/cc>.

Texas Commission on Environmental Quality
Customer Service Inspection Certificate

Name of PWS:	
PWS ID #:	
Location of Service:	

Reason for Inspection:
New construction ..... ☐†
Existing service where contaminant hazards are suspected ..... ☐†
Major renovation or expansion of distribution facilities ..... ☐†

I _____, upon inspection of the private water distribution facilities connected to the aforementioned public water supply do hereby certify that, to the best of my knowledge:

Compliance	Non-Compliance		
☐ ☐	☐	(1)	No direct connection between the public drinking water supply and a potential source of contamination exists. Potential sources of contamination are isolated from the public water system by an air gap or an appropriate backflow prevention assembly in accordance with Commission regulations.
† ☐	☐	(2)	No cross-connection between the public drinking water supply and a private water system exists. Where an actual air gap is not maintained between the public water supply and a private water supply, an approved reduced pressure principle backflow prevention assembly is properly installed and a service agreement exists for annual inspection and testing by a certified backflow prevention assembly tester.
† ☐	☐	(3)	No connection exists which would allow the return of water used for condensing, cooling or industrial processes back to the public water supply.
☐ ☐	☐	(4)	No pipe or pipe fitting which contains more than 8.0% lead exists in private water distribution facilities installed on or after July 1, 1988 and prior to January 4, 2014.
☐ ☐	☐	(5)	Plumbing installed after January 4, 2014 bears the expected labeling indicating ≤0.25% lead content. If not properly labeled, please provide written comment.
☐ ☐	☐	(6)	No solder or flux which contains more than 0.2% lead exists in private water distribution facilities installed on or after July 1, 1988.

I further certify that the following materials were used in the installation of the private water distribution facilities:

Service lines;	Lead ☐	Copper ☐	PVC ☐	Other ☐
Solder;	Lead ☐	Lead Free ☐	Solvent Weld ☐	Other ☐

I recognize that this document shall become a permanent record of the aforementioned Public Water System and that I am legally responsible for the validity of the information I have provided.

Remarks:	

Signature of Inspector:		Registration Number:	
Title:		Type of Registration:	
Date:			

SAMPLE

Figure 38: CSI template form (from 30 TAC §290.47(d), in RG-195 Appendix D)

Section 5—Activities

Timing of CSIs

Consider the timing of CSIs. Does the CSI performed on a strip mall after it is built, but before it is occupied necessarily identify all risks that might be present?

Check your CSI forms—is the right form being used? If multiple CSIs are sending in forms, do all of them meet the requirements?

If you are developing a program, flag the TCEQ form for future reference when working with CSIs.

Lead ban

If a building has plumbing installed before 2014, is it automatically in violation of the new lead ban requirements?

Workshop 3: CSI workshop exercise

Using the table that you created in the yellow pages workshop in Section 1, identify whether you have a current CSI on the facilities or establishments you documented in workshop 1 or whether one is needed.

Establishment Name	**Do you have a CSI for them?**	**Date of the CSI?**	**Was a hazard identified?**	**CSI Needed?**	**Backflow Device Present?**
Ex: Bevo's Vet Clinic	*Yes*	*12/12/1975*	*No*	*Yes*	*No*

Establishment Name	Do you have a CSI for them?	Date of the CSI?	Was a hazard identified?	CSI Needed?	Backflow Device Present?

Follow-up

Are there any items from this Section that should go on your 'to-do list,' or Follow-Up Form?

Does your PWS have staff with CSI licenses? Do you have a list of individual CSIs for your area?

Is the CSI form used in your area up-to-date? If not, what do you need to know to update it?

Section 5 Review Questions

- A Customer Service Inspection…
    1. Should be done annually at every residence.
    2. Includes a lead-free inspection.
    3. Is needed if building utilization changes.
    4. Determines whether health or non-health hazards are present at a facility.
- A Customer Service Inspection can be performed by…
    1. A licensed Plumber
    2. A licensed Irrigator
    3. A licensed Backflow Prevention Assembly Tester
    4. A licensed Customer Service Inspector
    5. A licensed Plumbing Inspector
- Examples of changes that warrant performing a CSI include:
    1. New construction
    2. Installing rainwater collection system for irrigation
    3. Installing a pool
    4. Disconnecting a private well
    5. Building a tree house

Note

Section 6: Developing and Implementing a Backflow Incident Action Plan

If you have a good backflow incident action plan, you will be ready for backflow when it occurs—you won't be surprised. Emergency planning is always a best practice. PWSs must take a proactive stance when managing cross-connection incidents in their system.

Failure to develop and implement an effective incident action plan can increase the number of customers who are negatively impacted when events occur.

For example, flushing the area of the incident without first isolating the area from the rest of the system through a system of isolation valves, could pull contaminated water into areas that otherwise would have not been contaminated.

Section 6—Learning objectives

In this Section, the student will:

- Learn about the elements of a backflow-incident action plan,
- Learn how to respond to a backflow incident, and
- Become familiar with resources to help with developing and implementing the plan—RG 476 and RG 477.

---

*As part of this Section, RG 477—"**A PWS GUIDE TO PREPARING A BACKFLOW-INCIDENT EMERGENCY-RESPONSE PLAN,**" and RG 476—"**A PWS GUIDE TO RESPONDING TO A BACKFLOW INCIDENT,**" are included, following the text.*

Purpose of a backflow-incident response plan

Developing a good plan, then implementing it successfully, can protect public health from backflow events.

Failure to develop an effective backflow incident action plan could cause a PWS to improperly respond to a backflow incident which may:

- Significantly increase the number of persons exposed to a health hazard;
- Increase the PWS's effort (cost) to contain a contaminant and clean the contaminant from the distribution system; and

- Expose the PWS to increased liability from a claim for punitive damages for negligence.

Developing the plan—a team effort

It is very important to solicit help developing your incident action plan from those authorities who will or may be involved in the response to backflow incidents.

---

*As part of this Section, RG 477—"**A PWS GUIDE TO PREPARING A BACKFLOW-INCIDENT EMERGENCY-RESPONSE PLAN,**" is included, following the text.*

Emergency response almost always includes departments and authorities from local, county, and state entities. Effective communication between these authorities will be a key recipe in a successful plan.

Soliciting help and advice from the authorities that you have chosen to assist you in incident response will promote a sense of 'buy-in' and will spark the beginning of effective communication.

Elements of a plan

Like any emergency response plan, the backflow-incident response plan should be developed before an incident happens. Any people who are expected to help with responding to the incident should be aware of the plan, and its elements.

The plan should contain a list of tasks to be accomplished which focuses around protecting the public health and safety of your customers. Your task list should include the elements needed to implement the response.

Elements of an incident action plan

A backflow-incident action plan should have a:

- Designated response manager with a
  - Critical management team, and
  - Communication strategies;
- Contingency plan for emergency water;
- Possible 'triggers' for implementing the response plan;
- Sampling protocol (for example, SOP) including:

    - Detailed water system information,
    - Sample locations,
    - Sample collection procedures including chain-of-custody, and
    - Methods or labs identified for each chemical or microbe tested for;
- Unidirectional flushing plan, and
- A strategy for keeping the plan up to date—for example, review during periodic CCCP meetings.

Important: Emergency numbers

The first page of the plan should consist of all the emergency phone numbers for the local emergency response and environmental regulatory authorities (TCEQ, etc.).

Create an SOP for flushing after an incident

Develop a plan for thorough cleaning or flushing of the system to minimize the risk of drawing contaminants into uncontaminated areas.

The plan should indicate the amount of water and the length of time needed to completely flush the system.

The direction of flow should follow the principles of unidirectional flushing, ensuring that clean water is drawn through the contaminated site and contaminated water is prevented from entering uncontaminated areas.

Attachment 2 describes the principles of UDF.

If waste may need to be discharged into the sanitary sewer plans for working with the treatment plant should be included.

Plans for informing the customers that flushing will occur should be prepared. Instructions to give customers if they need to flush their plumbing, including water heaters, ice makers, and other appliances should be prepared.

*As part of this Section, Review RG 477—"**A PWS GUIDE TO PREPARING A BACKFLOW-INCIDENT EMERGENCY-RESPONSE PLAN,**" is included, following the text.*

Outline of Backflow Incident Response Plan (RG 477)

1. Emergency response personnel and contact information
    a. Designate an Emergency Response Manager for backflow events and list contact information
    b. Designate a Critical Management Team for backflow events and list contact information
2. Contingency plan for alternate water
    a. Identify sources of drinking water for customers in case a backflow event renders water non-potable
    b. Document how to notify customers if a boil water notice (BWB) is needed due to backflow.
3. Pipe maps

    Include maps that will allow the Emergency Response Manager and Critical Management Team to determine how to limit the extent of the contamination, and how to plan flushing.
4. Flushing protocols

    Include SOPs for flushing that will limit the effected area and remove bad water from the system.
5. Designate training for emergency responders

    List training that will allow the Emergency Response Manager and Critical Management Team to understand a backflow event and communicate appropriately. (For example, training for people who will talk to customers or media representatives)
6. Create a Response Plan SOP (RG 476)
    a. How to prevent further contamination
    b. How to identify the cross-connection
    c. How to document contaminants
    d. How to notify public, TCEQ, any additional authorities
    e. How to isolate the contamination
    f. How to sample to determine extent and type of contamination
    g. How to flush to avoid spreading contamination
7. Post-event communication
    a. Document how to restore public confidence after correcting the contamination.
    b. Document how to summarize the event for submission to the TCEQ
    c. Document how to communicate with entities in the system who may have similar hazards present

TCEQ RG 477 – A PWS Guide to Preparing a Backflow-Incident Emergency-Response Plan

TCEQ REGULATORY GUIDANCE

Water Supply Division
RG-477 • November 2009

A Public Water System Guide to Preparing a Backflow-Incident Emergency-Response Plan

Introduction

Although Texas law requires protection of public water systems (PWSs) from contamination through unprotected cross-connections, occasionally a *backflow incident* will occur in which the distribution system of a public water system becomes contaminated. A backflow incident is a confirmed case where a pollutant or contaminant enters the water supply as a result of back-siphonage or back-pressure. As a best management practice, the TCEQ recommends that public water systems prepare an emergency response plan in order to prepare for a backflow incident. This document contains general information only that is not intended to substitute for the advice of your own operator, engineer, or consultant, nor the rules and regulations established to prevent backflow in the distribution systems of PWSs. Water purveyors, waterworks operators, emergency-management personnel, professional consultants, and licensed backflow-prevention-assembly testers should be aware of these guidelines and understand their roles if an incident occurs. They should also maintain up-to-date knowledge of applicable federal, state, and local public-health statutes, rules, and regulations.

Who Should Read This Guide?

This guide is intended for those who work in a public water system in Texas—for example, a water district, a water-supply corporation, a city, or investor-owned system. In this guide, "you" refers to the PWS and its staff members. The general public, who are the customers of PWSs, will also find answers in this guide to many questions about emergency-response plans for backflow incidents.

Controlling Cross-Connections and Backflow

A *cross-connection* is the point at which a contaminated substance comes in contact with a drinking-water system. However, the potential risks associated with cross-connections can be mitigated by the installation of an appropriate backflow-prevention assembly.

Backflow refers to any unwanted flow of used or non-potable water or other substance from a domestic, industrial, or institutional piping system into a PWS's distribution system. One way to prevent backflow at a cross-connection is to install a backflow-prevention assembly.

The most effective way to prevent backflow is to maintain a rigorous cross-connection-control program within your water system. This will ensure that all cross-connections are protected against backflow. The TCEQ assesses PWSs' cross-connection control programs via surveys conducted by TCEQ personnel concerned with public drinking water and via comprehensive compliance investigations conducted by TCEQ regional investigators. To schedule a survey of your program by personnel from the Public Drinking Water Section, contact the agency's Central Office at 512-239-4691.

What are the potential contamination hazards from cross-connections?

Potential threats to a drinking-water supply include, but are not limited to:

- chemical plants using equipment connected to the public water supply
- hospitals
- mortuaries
- medical, dental, and veterinary clinics
- laboratories
- irrigation and lawn-sprinkler systems
- marinas
- connections with an auxiliary water supply, which could be polluted

How can I determine whether backflow has occurred?

Customer complaints of changes in water quality—such as unusual odor, color, or taste—or physical harm from water contact can indicate backflow. Water-system personnel handling quality complaints should be well-educated about backflow so that they can identify potential incidents. Water operators may note a drop in operating pressure, lowered chlorine residual, a spike in coliform detections, or water meters running in reverse, any of which may indicate that backflow has occurred.

However, it is very difficult to determine whether any of these occurrences are due to backflow. Backflow incidents may not be detected for many reasons, such as:

- Bacterial contamination is usually transient and localized, so sampling may not detect it.

- Chemical and bacterial monitoring is not thorough or frequent enough to identify most backflow incidents.
- Not all contamination can be detected by color, odor or taste, so it passes unreported by customers.
- Water system operators may not report suspected backflow incidents due to concerns about liability and loss of consumer confidence.
- Customers may not report all irregularities in water quality.
- Incidents of reduced pressure in water distribution systems are often transient and difficult to detect by conventional pressure-monitoring equipment, and may be localized. Reduced pressure is often due to routine flushing or line breaks.
- Health effects are difficult to link to backflow incidents, especially chronic effects.
- Contamination may not be widespread enough to draw the attention of public health officials.
- Information that could link an outbreak of illness to a backflow incident is often lacking.

It is important to encourage industrial and residential customers to report backflow incidents to the public water system immediately.

Why should a water supplier prepare an emergency-response plan for backflow incidents?

Texas regulations do not require water suppliers to prepare an emergency-response plan for backflow incidents. However, all PWSs are required to have an operation and maintenance manual that includes protocols to be used during a natural or human-caused event affecting a PWS's water quality. Since it is the water system's primary function to protect public health, the TCEQ recommends adoption of an emergency-response plan as a best management practice. Inadequate preparation for backflow incidents could result in the spread of contamination throughout the water system, endangering the health of the customers.

An Emergency-Response Plan for Backflow Incidents

Designate a Water Utility Emergency-Response Manager

The PWS may elect the utility's manager to be its emergency-response manager, responsible for carrying out the emergency-response plan for backflow incidents. The manager takes charge of backflow incidents as soon as they are known. A backup emergency-response manager should be designated, and should be prepared to assume this lead role if the manager is unavailable.

Organize a Critical Management Team

Establish a team composed of local emergency responders, such as the local TCEQ regional office, law enforcement, public-health agencies, the hazardous-materials (hazmat) team, the local fire department, and your local emergency-response network. Maintain current contact information for all critical-management-team members and establish a mode of communication among them that functions 24 hours a day, seven days a week. Clarify the responsibilities of each team member and delegate tasks appropriately.

Develop contacts with the local news media and determine the most efficient way to disseminate emergency water-quality notices to customers. Keep contact information on site for a variety of local media—newspapers, radio, and television—and be sure that a critical-management-team member is assigned the task of contacting the media.

Develop a Contingency Plan for Alternate Water Supplies

Secure alternate water supplies by establishing mutual aid agreements with neighboring water systems, memorandums of understanding, or inter-municipal agreements to supply water to one another during an emergency. In order to meet TCEQ's water capacity requirements, many public water systems have already established at least one emergency interconnection with a neighboring system.

During a backflow incident, it may be necessary to issue a "do not use water" or "boil water" public health notice to your customers. If the contamination is microbacteriological in nature, then a "boil water" notice could provide adequate public health protection. However, if the contamination is chemical in nature, then a "boil water" notice will not normally provide adequate protection of public health and a "do not use water" notice will be required. If there is any question as to which notice to use, the PWS should issue a "do not use" notice until notified by the TCEQ otherwise. Alternate water sources must be secured in order to maintain critical facilities, such as hospitals and the fire department, that depend on water to function. Be sure to secure enough alternate water to account for extraordinary water demands during a backflow incident, such as fire fighting. An arrangement may be necessary with neighboring fire departments capable of sending tanker trucks to secure an adequate water supply for fire fighting. Alternate sanitation supplies such as portable toilets may be necessary when contaminated water is not to be sent to the wastewater stream.

If a "do not use water" or "boil water" notice is put into effect, bottled water may need to be secured. Establish advance contact with local bottled-water retailers and TCEQ-approved water haulers in order to plan for the distribution of sufficient water to the affected customers.

Maintain Detailed Information about the Water System

Maintain up-to-date information regarding the direction of water flow through the distribution system; the locations of shutoff valves, access points, roads, buildings, and health hazards; and the capacity of the clean-water reservoir. Be familiar with the water system's construction, operation, maintenance, and hydraulics, and the chemicals it uses. It is helpful to keep on hand at the utility office up-to-date laminated maps of the distribution system and the location of all isolation valves. This information will help in determining where and how quickly the contaminated water might spread and how to isolate the affected area, and will hasten the shift to any possible alternate water source in a backflow incident.

Develop a Unidirectional Flushing Plan

Unidirectional flushing is a type of line flushing that isolates pipe sections or loops in an organized, sequential manner, typically from source to periphery. Hydrants should be operated to pull the freshest water into the area being flushed. Flushing programs usually start at the source of contamination and move out through the system.

Unidirectional flushing (UDF) consists of closing specific valves to create one-way flow, and then opening hydrants in consecutively. This increases the speed of the water flow in the pipes to a high enough velocity to remove the contaminated water. **Conventional** line flushing draws water in from all directions and does not increase the speed of water flow through the pipes enough to dislodge deposits. **Unidirectional** flushing allows for a better response to localized water-quality complaints.

The typical requirements to structure a successful unidirectional-flushing program include determining the size and the makeup of discrete flush zones, collecting data, organizing manpower, determining the flushing flow rate, and creating zone maps showing the location of valves, the source of pressure, and the size of the lines. Since a UDF program targets distribution pipes less than 12 inches in diameter, transmission piping is typically not included in a UDF program. Distribution pipes smaller than 12 inches in diameter are divided into zones. This type of flushing is optimized via hydraulic modeling and geographic information systems to pinpoint the best hydrant locations, valve locations, and the velocities that make up a zone in order to determine the sequence in which each pipe within the zone should be flushed.

The PWS must consider the proper disposal of flushed water; such discharges could harm the public health and the environment. Disinfectant residuals in the water may be toxic to aquatic life. In all cases, the flushed water must be handled in accordance with all federal and state regulations.

Train the Public Water System Staff in Backflow and Emergency Management

The utility emergency-response manager may want to ensure that a basic training course on backflow incidents is given to all utility employees so that they are able to identify a backflow incident when it occurs, and are prepared to respond appropriately. Several training courses are available to familiarize water-utility personnel with backflow:

Customer-Service Inspector (CSI) training

- Various CSI courses offered regionally.
- Designed to provide detailed knowledge of backflow and cross-connection control and instruction on customer-service inspections.
- Questions about training providers? Call the TCEQ Operator Licensing Section at 512-239-6135.

Backflow Prevention Assembly Tester course

- Various backflow-training courses offered regionally.
- Designed to provide general knowledge of backflow and detailed instruction on the testing of backflow-prevention assemblies.
- Questions about training providers? Call the TCEQ Operator Licensing Section at 512-239-6135.

Incident Command System training and National Incident Management System training

- NIMS training on standardized incident-management processes, protocols, and procedures that enable water-incident responders to coordinate and conduct response actions.
- Training available through the FEMA Web site at <www.fema.gov/emergency/nims/>.

Establish a Plan of Action

Establish trigger levels based on results being outside the normal baseline ranges for pressure, pH, disinfectant residual and temperature levels. Make a plan for notifying customers about the possible contamination (such as a "boil water," "do not drink," or "do not use" notice), flushing the water-distribution system, making available maps that show valves that can be used to isolate and flush distinct parts of the distribution system. The plan should address the worst-case scenario, in which a very hazardous contaminant has entered the water supply and must be remediated by a hazmat team. It should also have a "most likely hazard" scenario that addresses remediation of the hazard most likely to backflow into the water supply (based on the known hazards in the service area). Keep in mind that some contaminants may be discharged into a sanitary sewer, while others require special handling or treatment. Know the state,

federal, and local guidelines for disposal of contaminated water. It may also be necessary to quarantine the population that was exposed to the contaminant. Procedures for relocation must be well-planned in advance. The affected population may require immediate and long-term medical attention.

Water Testing

The water utility should assemble an in-house sampling team capable of collecting samples and forwarding them to the appropriate analytical laboratory for baseline monitoring and in response to a reported or discovered backflow incident. Sampling teams responding to potential contamination should be trained and equipped to characterize the site, perform on-site hazard screening using available field-test kits, collect samples, and prepare samples for transport.

If there is evidence or information suggesting contamination at sufficient levels to pose a threat to the life of the utility personnel, the utility should request a trained hazmat emergency-response team. Ideally, the utility emergency-response plan should include pre-established lines of communication with the hazmat response team. However, in most situations, calling 911 will contact the hazmat team.

The water utility should be familiar with the testing capabilities of nearby laboratories. No laboratory can test for all possible contaminants. Most labs specialize in testing certain types of contaminants (for example, chemical or biological). Know the contact information and hours of operation for each laboratory and the types of analyses it performs, as well as the turnaround time and cost of those analyses. A list of laboratories accredited by the State of Texas under the National Environmental Laboratory Accreditation Program can be found at the TCEQ's Web site at: <www.tceq.state.tx.us/assets/public/compliance/compliance_support/qa/txnelap_lab_list.pdf>.

Larger water systems may find it within their means to invest in a portable water-testing kit; however, smaller systems may find that some kits are not within their budget. Many different kinds of portable test kits are on the market; however, their capability to detect abnormalities in the water is limited. Most test kits contain tests for specific chemicals, such as arsenic, but there is no inexpensive test kit that will give a reading of what chemical a sample is contaminated with. Water systems may choose to assemble their own kits by keeping on hand various simple testing apparatus, such as a colorimeter (used to measure chlorine concentration), a pressure gauge, a thermometer, a pH meter, some pesticide-test strips, etc.

Some high-end kits contain a luminometer that will determine the general toxicity of the water. In order to interpret results generated using a luminometer, it is necessary to compare the baseline (normal) water

composition to that of the contaminated water. This means that baseline water monitoring using the test-kit luminometer must have been completed before testing for contaminants. The staff must have sufficient training in testing using the luminometer, and must understand basic statistics in order to interpret the results.

Water must be tested throughout all phases of incident response to determine whether the remediation strategy is sufficient, and test results must be reported to the TCEQ in order to lift the public health notice that was issued regarding the water system.

Conduct baseline water quality monitoring during normal times

In a backflow incident, it is necessary to identify the contaminant that has entered the water system. To do so, it is necessary to know what chemicals and organisms are present in the water system during normal times. Conducting baseline water quality monitoring will give you the normal levels of both priority contaminants and standard chemical parameters (chlorine, pH, oxidation-reduction potential, etc.) that can be used to determine what type of contamination has occurred during a backflow incident.

For many priority contaminants, the baseline is expected to be zero or below the detection limit of the corresponding analytical methods. To account for variable water quality within the distribution system, baseline monitoring should involve the collection and analysis of samples from multiple locations in the distribution system. Baseline monitoring should use the same sample-collection and -analysis procedures that would be used in a triggered event. This will eliminate unnecessary suspicion during a triggered event for low-level detections that are regularly seen. Baseline monitoring can also serve as practice for the sampling teams and the utility's network of laboratories, so triggered events will go more smoothly.

Results of baseline monitoring need to be recorded and compared to historical results, if available, for the sample sites. Since there are always some slight variations in a disinfectant residual, etc., the normal upper and lower limits must be determined. It is important to note that some noted results outside of the normal range for disinfectant residual, pH, pressure, and water temperature can vary with the seasons and the increase and decrease of customer water demands or raw-water sources being used. Also, the problem could also be a mechanical failure of the PWS's equipment and not a backflow. These results should be maintained by the PWS and periodically reviewed to track trends.

Establish a procedure for recording backflow incidents

Keep records of the backflow incident such as:

- the type of cross-connection that caused the incident,

- the contaminant,
- the location of the cross-connection and the boundaries of the affected area,
- the remediation efforts employed,
- data identifying the affected population,
- the long- and short-term health effects of the contaminant,
- any treatment given to the affected population, and
- the backflow-prevention method used to eliminate the cross-connection.

Where to Find More Information

Contact the TCEQ—

By phone:

Public Drinking Water Section, 512-239-4691

By mail:

Public Drinking Water Section, MC 155
TCEQ
PO Box 13087
Austin TX 78711-3087

On the Web:

Go to <www.tceq.state.tx.us/goto/publications>. Search for publication number 195 to find *Rules and Regulations for Public Water Systems*, RG-195. Or visit <www.tceq.state.tx.us/rules> and follow the links to 30 TAC Chapter 290, Subchapter D.

Sources of Information about Cross-Connection Control:

American Society of Sanitary Engineering
ASSE International Office
901 Canterbury, Suite A
Westlake, OH 44145
440-835-3040

American Water Works Association
6666 West Quincy Ave.
Denver, CO 80235-3098
800-366-0107

Foundation for Cross-Connection Control and Hydraulic Research
University of Southern California
KAP-200 University Park MC-2531
Los Angeles, CA 90089-2531
866-545-6340

Sources of Information Addressing Responding to Contamination Threats to Drinking-Water Systems

EPA publications on water security

The entire list can be found at:

<cfpub.epa.gov/safewater/watersecurity/publications.cfm?view=all>

Potential Contamination Due to Cross-Connections and Backflow and the Associated Health Risks reviews: (1) causes of contamination through cross-connections; (2) the magnitude of risk associated with cross-connections and backflow; (3) costs of backflow contamination incidents; (4) other problems associated with backflow incidents; (5) suitable measures for preventing and correcting problems caused by cross-connections and backflow; (6) possible indicators of a backflow incident; and (7) research opportunities. This document is available at:

<www.epa.gov/safewater/disinfection/tcr/pdfs/issuepaper_tcr_crossconnection-backflow.pdf>

A Water Security Handbook: Planning for and Responding to Drinking Water Contamination Threats and Incidents describes how to recognize water contamination incidents, what actions a utility should take in the event of an incident, possible roles of the water utility within the larger Incident Command framework, and how the National Incident Management System is organized. It also describes the utility's actions and decisions during site characterization, laboratory analysis, public-health response, remediation, and recovery. It will also be helpful to utilities that are preparing or updating their emergency response plans. The handbook is available at:

<www.epa.gov/safewater/watersecurity/pubs/water_security_handbook_rptb.pdf>

Drinking Water Security for Small Systems Serving 3,300 or Fewer Persons presents basic information and steps you can take to improve security and emergency preparedness at small water systems. It is available at:

<www.epa.gov/safewater/watersecurity/pubs/very_small_systems_guide.pdf>

Emergency Response Plan Guidance for Small and Medium Community Water Systems is intended for use by systems serving a population of 3,301 to 99,999 as they develop or revise their emergency response plans This publication can be found at:

<www.epa.gov/safewater/watersecurity/pubs/small_medium_ERP_guidance040704.pdf>

Sampling Guidance for Unknown Contaminants in Drinking Water provides comprehensive guidance that integrates recommendations for

pathogen, toxin, chemical, and radiochemical sample collection, preservation, and transport procedures to support multiple analytical approaches for the detection and identification of potential contaminants in drinking water. The guidance is intended to support sampling for routine and baseline monitoring to determine background concentrations of naturally occurring pathogens, sampling in response to a triggered event, and sampling in support of remediation or decontamination efforts. This publication can be found at:

<www.epa.gov/safewater/watersecurity/pubs/guide_watersecurity_samplingforunknown.pdf>

Other EPA resources

Incident Command System (ICS) & National Incident Management System (NIMS) Training for the Water Sector was developed by the EPA Water Security Division to help drinking water and wastewater utilities to better understand the ICS, integrate with other first responders within an expanding ICS structure, and implement NIMS concepts and principles that will help utilities give mutual aid and assistance. Information about NIMS and ICS training is available at:

<www.epa.gov/safewater/watersecurity/pubs/training_nims.pdf>

The EPA's Response Protocol Toolbox, *Planning for and Responding to Contamination Threats to Drinking Water Systems*, assists with emergency-response preparedness and will be of value to drinking-water utilities. This toolbox is available as a series of PDF or Word files at:

<cfpub.epa.gov/safewater/watersecurity/publications.cfm?view=all>

Use of the Drinking Water State Revolving Fund (DWSRF) to Implement Security Measures at Public Water Systems. This fact sheet discusses the types of projects that might be fundable through the DWSRF to help public water systems protect their facilities.

<www.epa.gov/safewater/watersecurity/pubs/security-fs.pdf>

Figure 39: TCEQ RG 477 – A PWSs Guide to Preparing a Backflow-Incident Emergency-Response Plan

Implementing the plan

The plan you develop should prepare you to implement the elements described below.

---

*As part of this Section, Review RG 476—"**A PWS GUIDE TO RESPONDING TO A BACKFLOW INCIDENT,**" is included, following the text.*

The PWS should identify the situations that will trigger a backflow incident investigation in the plan.

At a minimum, the PWS should immediately begin a backflow incident investigation whenever the initial evaluation of a water quality complaint or field inspection indicates that:

- A backflow incident has occurred (i.e., drinking water supply has been contaminated) or may have occurred; or
- The complaint can't be identified to be a "normal" aesthetic problem; or
- During a water main break (or power outage for pumped systems) which results in widespread loss of water pressure in the system, thus creating favorable conditions for backflow to occur; or
- When unexplained anomalies are documented in routine water quality testing.

Preventing further contamination

If the source of the contamination is apparent, then completely isolate it from the distributions system immediately.

For example, if the cross-connection is due to a backsiphonage of chemicals through a garden hose left hanging in a chemical feed tank, disconnect the hose to create an air-gap between the water system and the source of the contaminant.

Identification of source of contamination

In few instances, the contaminant will be immediately detectable and known; however, in most cases the PWS will have to identify the contaminant through specific sampling and 'good ole' detective work.

Consider distribution system issues that may be a possible source of the contaminant. For example:

- Broken pipes or valves,
- Air valve inlet below grade,
- Improperly screened tanks,
- Incorrectly completed repairs, and/or
- Any other possible sources of intrusion from the environment.

Known contaminant

If the contaminant is known, then the PWS, emergency response personnel and the environmental regulatory authorities should implement the sampling protocol in their incident response plan, focused on determining the location/boundaries and concentration of the contaminant.

Unknown chemical

Although, in some cases, the source of contamination may be known; however, the exact chemical (or chemicals) is not known due to proprietary or intellectual property.

In this instance, the PWS will likely have to rely on environmental regulatory assistance to figure out the chemical. After the chemical is known, you can establish a better sampling protocol.

When the contaminant is unknown, **the taste, odor, and appearance of the water as documented during customer complaints or personal observations may be more appropriate for establishing a sampling protocol.**

For example, if a customer complains of a gasoline odor or sheen in the water, then testing for volatile organic compounds (VOC) should be part of your sampling strategy.

At a minimum, when the contaminant is unknown, the PWS should collect bacteriological (coliform) samples and disinfection residuals in the area and any other tests identified in the incident response plan.

Flushing

Do not start flushing the distribution system until the source of contamination is identified. Flushing may aggravate the backflow

situation, and will likely remove the contaminant before a water sample can be collected to fully identify the contaminant.

Additionally, flushing may pull the contaminated water into other areas, increasing the number of customers exposed.

Conduct a house-to-house survey to search for the source of contamination and the extent that the contaminant has spread through the distribution system.

Check water meters

Note: a check of water meters may show a return of water (meter running backward) to the distribution system.

Discontinue service

When the cross connection responsible for the system contamination is located, the PWS should discontinue water service to that customer, until the customer completes the corrective action ordered by the PWS

Isolate contaminated portion of system

- Isolate the portions of the system that are suspected of being contaminated by closing isolating valves; leave one valve open to ensure that positive water pressure is maintained throughout the isolated system.
- Distribution maps and hydraulic models are very helpful for developing a strategy for isolating contaminants, if they are provided.
- Some municipal systems have well developed mapping systems, as they have robust GIS departments that have developed and maintained up-to-date mapping layers to include: fire hydrants, flush valves, isolation valves, etc.
- Systems without GIS departments, will have to rely on distribution maps and hydraulic models developed by their consulting engineers.
- These maps should be included with the PWS's incident action plan and should be kept up-to-date to prevent confusion during an incident.

- If the PWS has limited information regarding their distribution, the very first part of developing their plan should include developing or updating distribution maps and hydraulic surveys.

Determine the boundaries of the contamination

Some considerations in determining the boundaries of contamination are:

- Sample in an area large enough to determine the boundaries,
- Use up-to-date distribution maps to evaluate boundaries,
- Use the sampling protocol in the incident response plan, and
- Conduct a house-to-house search.

As long as the incident is occurring, you should sample inside and outside of the known area of contamination to identify boundaries and to ensure that the contaminant is not spreading farther through the distribution system.

Up-to-date distribution maps and hydraulic models can be very useful in determining the boundaries of the contamination, as the models can give you an idea of how the contaminant might move through the distribution system.

The PWS should work with any other emergency response individuals to use the sampling protocol in the backflow incident response plan. If you don't already have a protocol, establish one, and include sampling locations outside the area contamination.

Conduct a house-to-house survey to search for the source of contamination and the extent that the contaminant has spread through the distribution system. (Note: a check of water meters may show a return of water (meter running backward) to the distribution system.)

Customer, TCEQ and emergency authority notification

Consult with TCEQ

Notify your local TCEQ office as soon as possible but no later than 24 hours. Remember, DON'T WAIT until you have spoken to the TCEQ before taking measures to protect the health and safety of your customers.

Severity of customer notice

As soon as the risk from a backflow incident is confirmed, notify customers not to consume (or use) water until further test can confirm

that their drinking water is safe. The limitations on use ('no drinking' versus 'no use') depend on what the contaminant is.

Many systems issue precautionary boil water notices (BWNs) to take the highest level of protection when they are not sure the severity or the magnitude of the contamination.

BE CAREFUL however, certain sources of contamination are made worse through the process of boiling. For example, microcystins release higher levels of hepatotoxins (liver toxins) when water is boiled.

Certain events such as low or no disinfectant residuals, loss of pressure or fecal contamination will require a water system to issue a system-wide or isolated BWN.

Notification methods

Water systems may use a variety of ways to notify their customers including but not limited to: press releases, local television stations, newspapers, red alert systems, radio broadcast, door hangers, signs, and door to door interviews.

Additionally, social media outlets, such as FaceBook and Twitter, have become increasingly popular ways to reach customers.

- Start the notification with the customers nearest in location to the assumed source of contamination
- Inform the customer about the reason for the backflow incident investigation, the water system's efforts to restore water quality as soon as possible and the estimated time for full recovery

Notify other organizations

In addition to TCEQ's Regional Office, it is recommended that the following individuals and organizations be notified:

- TCEQ Media Relations (if public or media interest is high).
- Other state and local authorities and facilities as appropriate, such as:
    - Local government elected and appointed officials, including
        - Mayors,
        - City Council members,
        - County Commissioners, and/or
        - County Sheriff, etc.

    - State and local emergency management services, including:
        - Fire department (needs to know which hydrants can be used for firefighting and may be able to assist in flushing efforts);
        - Police and Sheriff departments;
        - Department of public safety (DPS);
        - Emergency medical services (EMS);
        - Hazardous materials response team (HAZMAT); and/or
        - Office of emergency management (EOM), etc.
    - The local wastewater facility,
    - The local and state health departments,
- Affected critical-care facilities such as local hospitals and nursing homes, and
- Emergency relief organizations such as the local Red Cross and Salvation Army (if the severity of the incident has displaced people from their homes, etc.).

If evidence of intentional contamination of the water system arises, notify the following agencies (available 24 hours a day, seven days a week):

- The Federal Bureau of Investigation (FBI) at 911, and
- The National Response Center (NRC) at 800-424-8802.

Public health impacts

The PWS will seek immediate input from and work with state and local health agencies to accurately communicate and properly mitigate potential health effects resulting from the backflow incident.

If appropriate, the PWS will refer customers that may have consumed the contaminant or had their household (or commercial) plumbing systems contaminated to public health personnel, TCEQ, and local administrative authorities (plumbing inspectors).

Implement the Plan for Systematic Flushing

Develop a plan for thorough cleaning or flushing of the system to minimize the risk of drawing contaminants into uncontaminated areas. The plan should indicate the amount of water and the length of time needed to completely flush the system.

The direction of flow should follow the principles of unidirectional flushing, ensuring that clean water is drawn through the contaminated site and contaminated water is prevented from entering uncontaminated areas.

- Depending on the nature of the contamination, some wastes may be discharged into the sanitary sewer and some may need special handling or treatment.

Inform the water customers of the remediation plans and whether they will need to flush their plumbing, including water heaters, ice makers, and other appliances.

- Sampling should be conducted during and after flushing to ensure that the flushing is not compounding the problem or that the flushing has removed the contaminant from the area.
- A protocol for testing pressures in the distribution system while flushing should be established to prevent pressure drops that could exacerbated the problem.

Cleaning/disinfecting the distribution system

- Develop and implement a program for cleaning the contaminated distribution system consistent with the contaminant(s) identified.
- Where both chemical and bacteriological contamination has occurred, disinfection will be conducted after the removal of the chemical contaminant

---

*As part of this Section, Review RG 476—"**A PWS GUIDE TO RESPONDING TO A BACKFLOW INCIDENT,**" is included, following the text.*

TCEQ RG 476–A PWS Guide to Responding to a Backflow Incident

TCEQ REGULATORY GUIDANCE

Water Supply Division
RG-476 • November 2009

A Public Water System Guide to Responding to a Backflow Incident

Introduction

Although Texas law requires protection of public water systems from contamination through unprotected cross-connections, occasionally a backflow incident will occur in which the distribution system of a public water system becomes contaminated. A cross-connection is a physical connection between drinkable water and a liquid or gas that could make the water unsafe to drink (wherever there is a cross-connection, there is a potential threat to public health from the liquid or gas contaminants). A backflow incident is a confirmed case where a pollutant or contaminant enters the water supply as a result of back-siphonage or back-pressure. Changes in water quality, such as changes in pH, temperature, coliform count, and disinfectant residual, can result from a backflow incident. Many such incidents pass unreported due to the difficulty in identifying the cause of a change in water quality. The TCEQ offers this guide to help public water systems respond to a backflow incident.

Who Should Read This Guide?

This guide is intended for those who work in a public water system (PWS) in Texas—for example, a water district, a water supply corporation, a city, or an investor-owned system. In this guide, "you" refers to the PWS and its staff members.

Members of the general public, who are the customers of PWSs, will also find answers in this guide to many questions about responding to backflow incidents.

This publication is for general guidance only. It does not take the place of the rules and regulations established to prevent backflow from occurring in the distribution systems of PWSs.

Emergency-Response Protocol

When PWS personnel are first notified of a backflow incident, they should determine whether the cross-connection still exists. If so, staff members should begin at step 1 below. If the cross-connection has been eliminated, begin at step 3.

In the event of a backflow incident, public water system personnel should:

1. Prevent Further Contamination

Stop the pressure differential that caused backflow of the contaminant, if possible. For example, if the differential is the result of low pressure in the distribution system, check the status of the service pumps.

2. Identify and Isolate the Cross-Connection

For example, if the cross-connection is due to back-siphonage of chemicals through a garden hose left hanging into a chemical tank, disconnect the garden hose at the residence to create an air gap between the potable-water supply and the chemicals.

3. Document the Contaminant(s), if Known

Document the reported contaminant. If the contaminant is unknown, skip to step 8 (sampling) in order to determine the type of public health threat posed by the contaminant. Then return to step 4.

4. Notify the Public

In areas where human exposure to harmful contaminants is suspected, immediately notify affected consumers of restricted water usage and recommend that they do not drink the water. The public notice should explain the cause of the contamination and corrective actions that are under way, and should discuss health effects as appropriate.

The type of public notice depends on the type of contaminant. Issue a "boil water" notice if the contaminants are biological, and if boiling does not create other health problems through inhalation or skin contact with vapor. Issue a "do not drink" notice if the contaminants are chemical, and if vapor and skin contact do not pose risks. A "do not use" notice should be issued if the contaminant is unknown, treatment of the water is not possible, or the contaminant poses a health risk through inhalation of water vapor or skin contact with vapor. Because "do not use" and "do not

drink" notices place a great burden on critical facilities, such as hospitals, alternate water sources must be secured immediately.

5. Notify the TCEQ

Coordination of response to backflow incidents is the responsibility of TCEQ central-office personnel, who will coordinate with the appropriate regional staff. During normal business hours, the Public Drinking Water section may be reached at 512-239-4691.

If the contamination poses an immediate threat to public health or the environment, also notify the TCEQ spill report line to dispatch a 24-hour, seven-days-a-week response team, at 800-832-8224.

6. Notify Additional Authorities

As appropriate, it is recommended that the following individuals and organizations be notified:

- TCEQ Media Relations (if public or media interest is high).
- Other state and local authorities and facilities as appropriate, such as local government, state and local emergency management, the local wastewater facility, the health department and affected critical-care facilities including the fire department, which needs to know which hydrants can be used for firefighting.

If evidence of intentional contamination of the water system arises, notify the following agencies (available 24 hours a day, seven days a week):

- The Federal Bureau of Investigation (FBI) at 911
- The National Response Center (NRC) at 800-424-8802

7. Isolate the Contamination

If the contaminated portion of the distribution system can be easily isolated, proceed to step 11. If the contamination is extensive and its extent is unknown, proceed to step 8.

8. Sample the Water to Determine the Type and Extent of Contamination

Sample the water to determine the level of the reported contaminant. If your knowledge of the backflow incident is based on a customer complaint but the specific contaminant is unknown, take samples of water appropriate to the taste, odor, or appearance noted in the complaint. For example, if a customer complains of a gasoline odor in the water, perform a test for volatile organic compounds.

Always take bacteriological samples if the specific contaminant is unknown. If personnel from the public water system are unable to collect and send samples for analysis, the TCEQ staff should be notified.

Throughout the incident, continue to take appropriate samples within and outside of the suspected contaminated area to assess the extent of the contamination.

9. Make a Plan for Systematic Flushing

Develop a plan for thorough cleaning or flushing of the system to minimize the risk of drawing contaminants into uncontaminated areas. The plan should indicate the amount of water and the length of time needed to completely flush the system. The direction of flow should follow the principles of unidirectional flushing, ensuring that clean water is drawn through the contaminated site and contaminated water is prevented from entering uncontaminated areas. Depending on the nature of the contamination, some wastes may be discharged into the sanitary sewer and some may need special handling or treatment. Inform the water customers of the remediation plans and whether they will need to flush their plumbing, including water heaters, ice makers, and other appliances.

10. Isolate the Contamination and Flush

Isolate the contaminated portion of the distribution system and flush the system and, where necessary, clean the customer's private water-distribution facilities.

11. Sample after Flushing

After flushing and any necessary cleaning, test the drinking water in affected areas to ensure the contamination has been removed. The type of samples that should be collected depends on the type of contamination that has been identified.

12. Eliminate Risk of Future Contamination

Ensure that the source of contamination has been removed and that the risk of future contamination has been eliminated. If the backflow incident occurred at a residence or business (the customer side of the meter), perform a customer-service inspection at that location. If possible, develop a plan to lower the risk of this type of cross-connection recurring in the future. The plan should include contacting similar types of businesses with preventive guidance.

13. Restore Consumer Confidence in Water Quality

Inform the public when the water is clean and safe to drink. Lift the public-health notice restricting water usage in the same manner it was issued.

14. Prepare a Written Summary of the Incident and Submit It to:

TCEQ Technical Review and Oversight Team, MC 155
PO Box 13087
Austin TX 78711-3087

Where to Find More Information

To contact the TCEQ:

By phone: Public Drinking Water Section
512-239-4691

By mail: Public Drinking Water Section, MC 155
TCEQ
PO Box 13087
Austin TX 78711-3087

By e-mail: Public Drinking Water Section
<pdws@tceq.state.tx.us>

Information about Cross-Connection Control

TCEQ Publications on the Web:

Go to <www.tceq.state.tx.us/goto/publications>. Search for publication number 195 to find *Rules and Regulations for Public Water Systems*, RG-195. Or visit <www.tceq.state.tx.us/rules> and follow the links to 30 TAC Chapter 290, Subchapter D.

Go to <www.tceq.state.tx.us/goto/pws_staff> for links to the following documents:

Chemical Contamination of a Public Drinking Water Source
Response to an Alleged Waterborne Disease Outbreak

Other Sources

American Society of Sanitary Engineering
ASSE International Office
901 Canterbury, Suite A
Westlake, OH 44145
440-835-3040

American Water Works Association
6666 West Quincy Ave.
Denver, CO 80235-3098
800-366-0107

Foundation for Cross-Connection Control and Hydraulic Research
University of Southern California
KAP-200 University Park MC-2531
Los Angeles, CA 90089-2531
866-545-6340

Information on Responding to Contamination Threats to Drinking-Water Systems

The entire list of the EPA's water-security publications can be found at <cfpub.epa.gov/safewater/watersecurity/publications.cfm?view=all>.

The EPA's Response Protocol Toolbox, *Planning for and Responding to Contamination Threats to Drinking Water Systems*, assists with emergency-response preparedness and will be of value to drinking-water utilities. This toolbox is available as a series of PDF or Word files at <cfpub.epa.gov/safewater/watersecurity/publications.cfm?view=all>.

The EPA publication *A Water Security Handbook: Planning for and Responding to Drinking Water Contamination Threats and Incidents* describes how to recognize water contamination incidents, what actions a utility should take in the event of an incident, possible roles of the water utility within the larger Incident Command framework, and how the National Incident Management System is organized. It also describes the utility's actions and decisions during site characterization, laboratory analysis, public health response, remediation, and recovery. It will also be helpful to utilities that are preparing or updating their emergency-response plans. The handbook is available at <cfpub.epa.gov/safewater/watersecurity/index.cfm>.

The EPA's publication *Drinking Water Security for Small Systems Serving 3,300 or Fewer Persons* presents basic information and steps you can take to improve security and emergency preparedness at small water systems. It is available at <www.epa.gov/safewater/watersecurity/pubs/very_small_systems_guide.pdf>.

The EPA's publication *Emergency Response Plan Guidance for Small and Medium Systems* is intended for use by community water systems serving a population of 3,301 to 99,999 as they develop or revise their emergency-response plans. This publication can be found at <www.epa.gov/safewater/watersecurity/pubs/small_medium_ERP_guidance040704.pdf>.

The EPA's publication *Sampling Guidance for Unknown Contaminants in Drinking Water* includes comprehensive guidance that integrates recommendations for pathogen, toxin, chemical, and radiochemical sample collection, preservation, and transport procedures to support multiple analytical approaches for the detection and identification of potential contaminants in drinking water. The guidance is intended to support sampling for routine and baseline monitoring to determine background concentrations of naturally occurring pathogens, sampling in response to a triggered event, and sampling in support of remediation or decontamination. This publication can be found at <www.epa.gov/safewater/watersecurity/pubs/guide_watersecurity_samplingforunknown.pdf>.

Figure 40: TCEQ RG 476–A PWS Guide to Responding to a Backflow Incident

Section 6—Activities

If your PWS has a backflow incident response plan, does the first page have the current, correct phone numbers for people who may need to be contacted in case of an incident? If not, what information needs to be updated?

Does your PWS have a clearly identified backflow incident response manager? If not, who might be a good candidate for that role?

When customer complaints are received, do the people responding ask questions to determine if it could be due to a backflow incident? Are those staff trained on backflow risks, or could they be?

Identifying contaminants

Here is a list of descriptions customers have given during a complaint. Suggest potential contaminants that could be related to the description:

Complaint description	Possible contaminant
"Oily feeling in my mouth"	
"Salty taste"	
"Rotten-egg odor"	
"Red water"	
"White particles, fibers"	

Unidirectional flushing math

For unidirectional flushing, the water should go at least 5 feet per second (fps) in order to remove most settled particulate matter. In a pipe with an inner diameter of 2 inches, what flow rate will accomplish that velocity? In a pipe with ID of 12"?

Follow-up

Are there any items from this Section that should go on your 'to-do list,' or Follow-Up Form?

Does your PWS have a backflow incident response plan? In not, what actions are necessary to create one? If so, is the plan up-to-date or does it need to be updated?

Section 6 Review Questions

- What are some backflow incident action plan elements?
    1. Phone numbers for key staff.
    2. Plan for Customer Service Inspections.
    3. Training to identify possible contaminants.
    4. Plan for communicating with customers.
    5. Tickets for the Greyhound bus outta town.
- Which are true statements?
    1. A backflow incident will never require a Boil Water Notice.
    2. A backflow incident may require a Do Not Use notice.
    3. Backflow incidents are always identified.
    4. The first thing to do in a backflow incident is flush the system.
- You may become aware of a backflow incident when…
    1. Customers complain of unusual water quality
    2. The lake turns over
    3. An industry informs you of an issue
    4. Unusually high pressure is detected in the system

Notes

Section 7: Certifications, Licensing, and Testing

It is important that individuals conducting CSIs are properly trained and certified, so they can identify potential cross-connections when presented a scenario in the field.

Likewise, it is paramount that backflow assemblies are installed according to manufacturer's specifications and are routinely inspected/tested by individuals with the appropriate credentials and certifications.

Section 7—Learning objectives

In this Section, you will:

- Learn basic licensing credentials to get a CSI license;
- Understand the Backflow Prevention Assembly Testers (BPATs) licensing requirements;
- Learn about required periodic testing and maintenance of BPAT test gauges;
- Understand special requirements for fire suppression systems; and
- Understand who is responsible for paying for CSIs and periodic backflow testing and maintenance.

Very Important: Follow up

It is **not** good enough just to install a backflow prevention device without inspecting, testing and maintaining it. In fact, this often leads to the highest potential for contamination and disaster, as it builds a false sense of security.

This reasoning says, "Look, I have a backflow prevention device here, nothing can go wrong, right?" Please, do not let this become your attitude! Routine inspection, testing and maintenance is where the rubber meets the road when it comes to protecting your system and customers from contamination related to cross-connections.

Customer Service Inspection (CSI) licensing

The CSI Inspector is trained and licensed to examine private water-distribution facilities in order to determine the presence of cross-connections, potential contamination hazards, and illegal materials containing lead and copper.

The CSI license is similar to other water works licenses in that there is required initial and continuing education, and you must pass an exam. More detailed information concerning CSIs may be found in TCEQ's **RG 206: "A PUBLIC WATER SYSTEM GUIDE TO CUSTOMER SERVICE INSPECTIONS"** which is available at:

Information on acquiring a CSI license may be found by contacting TCEQ's Occupational Licensing Section at:

www.tceq.state.tx.us/goto/cust_serv_lic

Details of how a licensed CSI performs CSIs were covered in Section 5 of this DAM.

Backflow prevention assembly installation:

The regulations of the Texas State Board of Plumbing Examiners determine which qualified individuals can install such assemblies.

Licensed plumbers can install backflow-prevention assemblies, but exemptions in the Plumbing License Law allow other individuals to install assemblies in specific cases.

For Example: Permitted Homeowners

A homeowner who has obtained the appropriate permit (if required) may install a backflow prevention assembly on his irrigation system or a water operator may install an assembly on his own distribution system.

Installation flowchart

Is there any tool that our public water system can use to help determine who can install a backflow prevention assembly?

Yes, the TCEQ has developed a detailed **flowchart** that can help you determine who is authorized to install backflow-prevention assemblies. Please find the flowchart attached as Figure 40, below (**Appendix A** in RG-478).

Can I Install A Backflow Prevention Assembly?

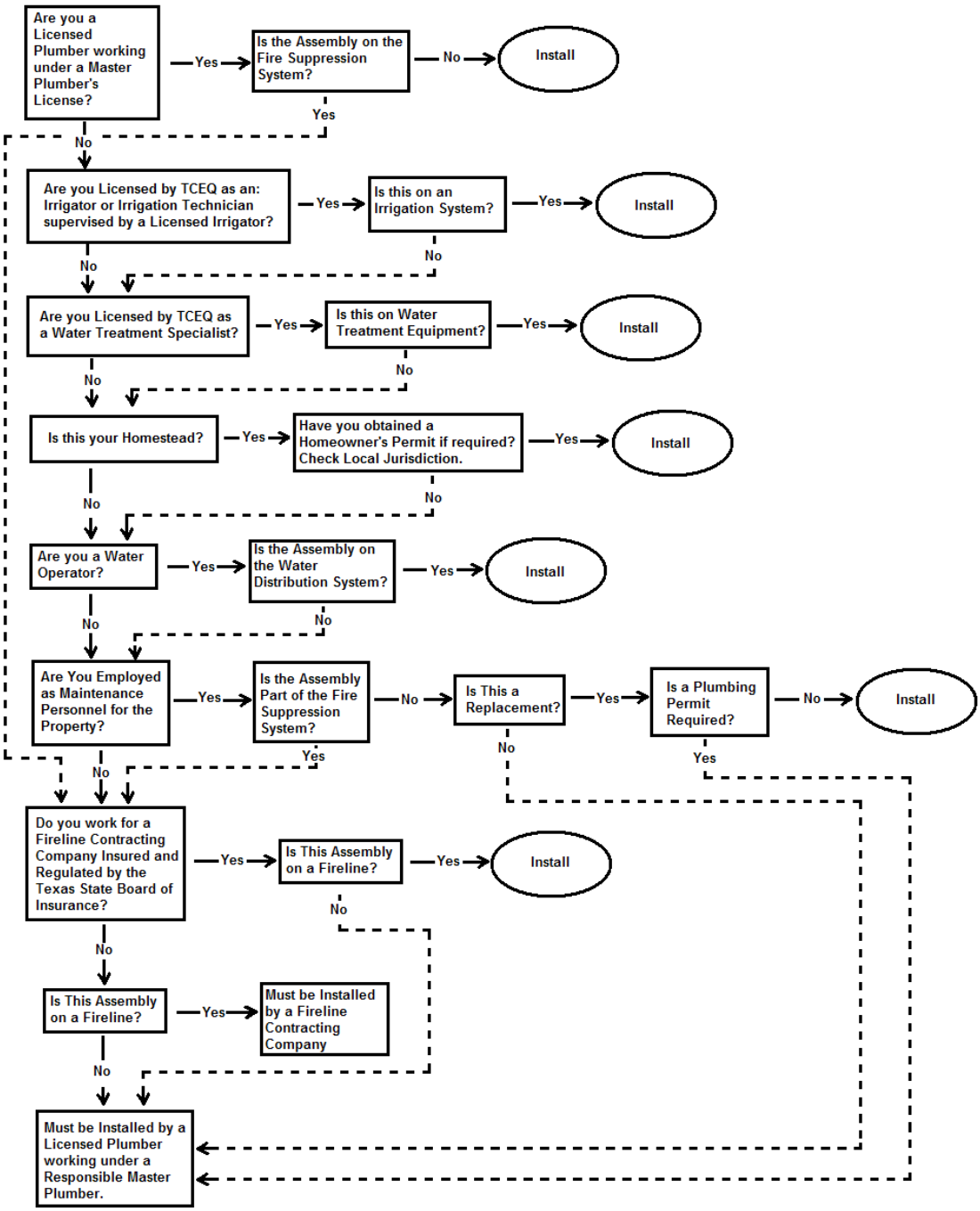

Figure 41: RG-278 flow chart:
Can I install a backflow prevention assembly?

Backflow prevention assembly testing:

Assemblies used for health-hazard protection, whether installed at the meter or part of an internal program, must be tested upon installation and once a year thereafter by a licensed backflow-prevention-assembly tester (BPAT).

Like all mechanical devices, backflow-prevention assemblies are subject to failure over time and must be tested to ensure that they are operating properly and are protecting the potable water supply.

As noted above, the TCEQ rules require that all backflow prevention assemblies be tested upon installation, and that assemblies installed to protect against health hazards must be tested annually [30 TAC §290.44(h)(4)].

The Rule: Installation and testing of devices that prevent backflow consistent with the level of hazard

290.44(h)(4) states:

> *"All backflow prevention assemblies that are required according to this section and associated table located in 290.47(i) of this title shall be tested upon installation by a recognized backflow prevention assembly tester and certified to be operating within specifications. Backflow prevention assemblies which are installed to provide protection against health hazards must also be tested and certified to be operating within specifications at least annually by a recognized backflow prevention assembly tester."*

Individuals testing backflow assemblies must hold a TCEQ BPAT license.

Licensed BPATs are qualified to test and repair assemblies on any domestic, commercial, industrial, or irrigation service.

Exception: Fire-suppression systems

There is an additional requirement for BPATs who test and repair assemblies on fire suppression systems or fire lines. BPATs may test an assembly on these systems **ONLY IF THEY ARE PERMANENTLY EMPLOYED BY AN APPROVED FIRE-LINE CONTRACTOR**. This is due to the additional alerting apparatus and wiring that is located on the backflow prevention assembly. It is critical that the BPAT be properly trained to leave the backflow prevention assembly in proper functioning order after his test. A mistake could put lives and property at risk.

More information on backflow prevention on fire suppression systems may be found in the TCEQ RG 345, **Backflow Protection on Water-Based Fire Protection Systems** (RG 345), available at:

www.tceq.texas.gov/publications/rg/rg-345.html

The licensed BPAT must fill out and sign the test and maintenance (T&M) form, certifying whether the assembly has been installed correctly and is operational.

After completing the form, the BPAT sends the signed original to the PWS, which is required to retain it for **3 years**.

Important: Improper installation

If the BPAT submits a form to the PWS indicating improper installation of a backflow prevention assembly, even though it passed the test, the PWS must make arrangements for the reinstallation of the assembly in accordance with manufacturer recommendations and local codes.

If, during a routine test of a backflow prevention assembly, the BPAT determines that the backflow prevention assembly will ***not*** pass the test and is in need of repair, then the backflow prevention assembly must be repaired and retested after repair. Otherwise, it cannot be said that the backflow prevention assembly passed the test.

The TCEQ has compiled a template T&M form. Please refer to Figure 41, below.

This is a sample only. For the official form please go to <www.tceq.texas.gov/goto/cc>.

Texas Commission on Environmental Quality

BACKFLOW PREVENTION ASSEMBLY TEST AND MAINTENANCE REPORT

The following form must be completed for each assembly tested. A signed and dated original must be submitted to the public water supplier for recordkeeping *purposes:

NAME OF PWS:	
PWS ID#:	
MAILING ADDRESS:	
CONTACT PERSON:	
LOCATION OF SERVICE:	

The backflow prevention assembly detailed below has been tested and maintained as required by commission regulations and is certified to be operating within acceptable parameters.

TYPE OF ASSEMBLY: ☐ Reduced Pressure Principle ☐ Reduced Pressure Principle-Detector
☐ Double Check Valve ☐ Double Check-Detector
☐ Pressure Vacuum Breaker ☐ Spill-Resistant Pressure Vacuum

Breaker

Manufacturer:		Size:	
Model Number:		Located At:	
Serial Number:			

Is the assembly installed in accordance with manufacturer recommendations and/or local codes? ☐ Yes ☐ No

	Reduced Pressure Principle Assembly			Pressure Vacuum Breaker	
	Double Check Valve Assembly		Relief Valve	Air Inlet	Check Valve
	1st Check	2nd Check			
Initial Test	Held at ____ psid Closed Tight ☐ Leaked ☐	Held at ____ psid Closed Tight ☐ Leaked ☐	Opened at ___ psid Did not open ☐	Opened at ____ psid Did not open ☐	Held at _____ psid Leaked ☐
Repairs and Materials Used**					
Test After Repair	Held at ____ psid Closed Tight ☐	Held at ____ psid Closed Tight ☐	Opened at ___ psid	Opened at ____ psid	Held at _____ psid

Test gauge used:

Make/Model:		SN:		Date tested for accuracy:	
Remarks:					

The above is certified to be true at the time of testing.

Firm Name:		Certified Tester Name (Print/Type):			
Firm Address:		Certified Tester Name (Signature):			
Firm Phone #:		Cert. Tester No.:		Date of Test:	

* TEST RECORDS MUST BE KEPT FOR AT LEAST THREE YEARS
** USE ONLY MANUFACTURER'S REPLACEMENT PARTS

SAMPLE

Figure 42: Backflow prevention assembly test and maintenance report (T&M).

In order to promote consistency across the state and provide for a common, fundamental knowledge base on testing backflow prevention assemblies, the TCEQ requires approved training providers to teach the testing procedures described in the latest edition of the University of Southern California's (USC) Foundation for Cross Connection Control and Hydraulic Research manual.

In order to be the most protective of the public health, these procedures are designed to fail an assembly before it will allow backflow and contaminate the potable water supply.

An individual who wishes to obtain a license to test backflow prevention assemblies must pass a written and practical test based on the USC field test procedures.

The gauges that BPATs use to test backflow prevention assemblies are very sensitive and accurate in measuring pressure differentials.

If these gauges are not working properly, there is a risk that a backflow prevention assembly could pass a test but not be functioning correctly. Therefore, licensed BPATs must have their **test gauges** tested for accuracy at least once per year [30 TAC §290.44(h)(4)(B)].

The date when the test gauge was tested for accuracy must be documented on each T&M report. More information on testing gauges may be found in the TCEQ RG 493, "**Accuracy Testing of Gauges Used for Testing Backflow-Prevention Assemblies**".

Non-potable test gauges

If a BPAT performs tests on both potable and non-potable installations, they must have two sets of gauges—one for the potable and one for the non-potable. The two sets must be clearly marked. Non-potable gauges must never be used on potable water installations.

Fees and payment for backflow prevention assembly testing

Payment for testing a backflow prevention assembly usually takes one of three routes:

- PWS performs testing,
- Local BPATs perform testing, or
- Customer can choose to have either the PWS or local BPAT perform testing.

PWS performs testing: A PWS with the appropriately licensed employee(s) on staff may have their own employee(s) conduct tests of backflow prevention assemblies in their service area and charge the customer a fee established by the PWS and approved by its governing body—or established by the TCEQ in the case of an investor-owned utility (IOU).

Local BPATs perform testing: A PWS may require their customers to have the backflow prevention assembly tested.
In this case, the customer usually hires a private BPAT, pays for the test, and the BPAT submits the test report to the water utility.

Customer chooses: A PWS may give their customers the option of having the backflow prevention assembly tested by a private company or having the water utility staff come out and conduct the test.

If a PWS requires the customer to have the assembly tested, the PWS must ensure that a TCEQ-licensed BPAT tested the backflow prevention assembly and that the test results were recorded on the correct form.

Highly Recommended: List of BPATs

The water system should provide a list of local BPAT licensed individuals if they are going to require customers to handle procuring a tester.

Important: TCEQ form approval

The water system must ensure that if it uses a format that deviates from the template provided by the TCEQ, the PWS's form must include the critical elements. Before an alternate form can be used, it must be submitted to the TCEQ and receive TCEQ approval.

Section 7—Activities

Discuss the method that your PWS uses to ensure backflow testing. Is it working efficiently?

Consider the situation where a PWS does not have a list of local CSIs or BPATs. What are some methods that the PWS could use to develop those lists?

In small communities, local leaders wear many hats. Think about who in a small community might benefit from CSI training or BPAT training.

Workshop 4: License search workshop exercise

The public water system should be able to provide a list of BPAT and CSI licensed individuals in their area when customers request it. An online search may be done to locate licensed individuals in your area.

From an online search engine, go to the following website address:

www2.tceq.texas.gov/lic_dpa/index.cfm?fuseaction=licall.searchgp

The screen will look like this:

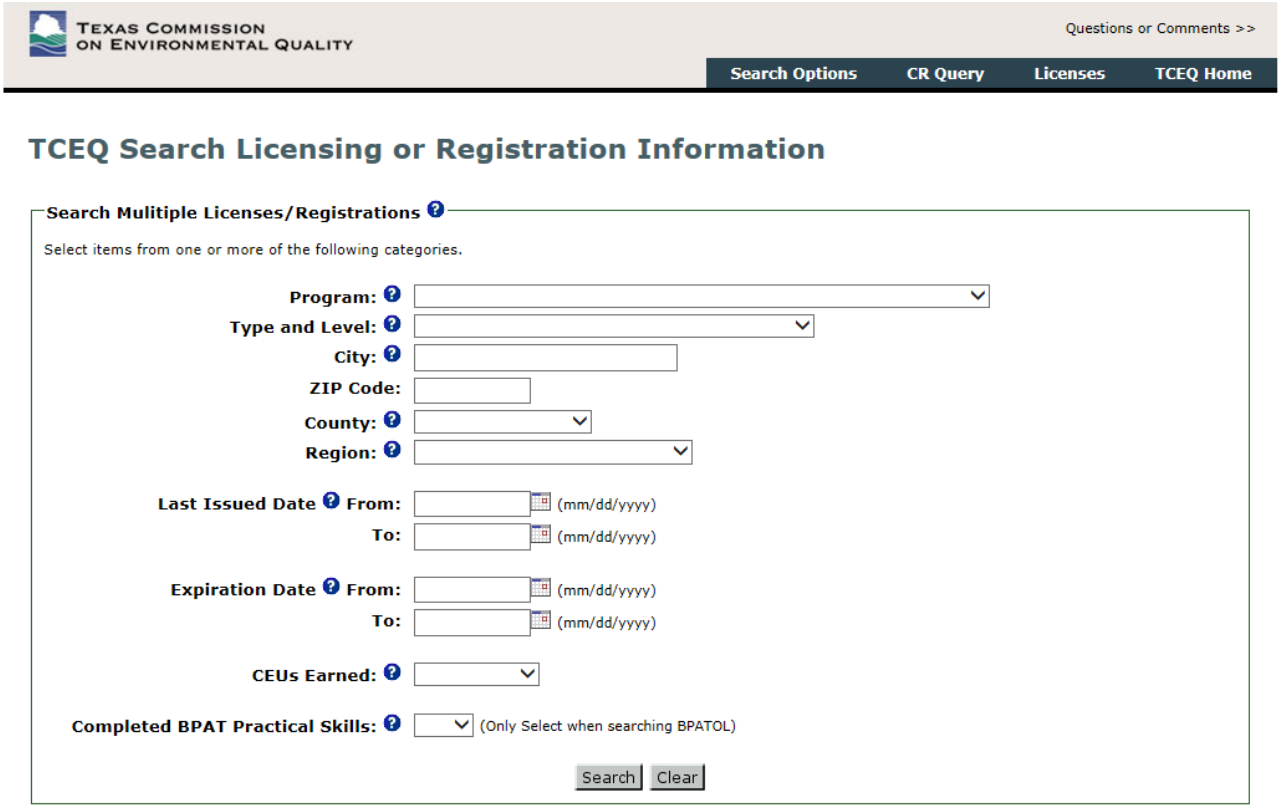

Use the down arrow to select customer service inspector license (CSIOL)

in the 'Program' box, select customer service inspector in the 'Type and Level' box and select a county in the 'County' box.

The screen will look like this:

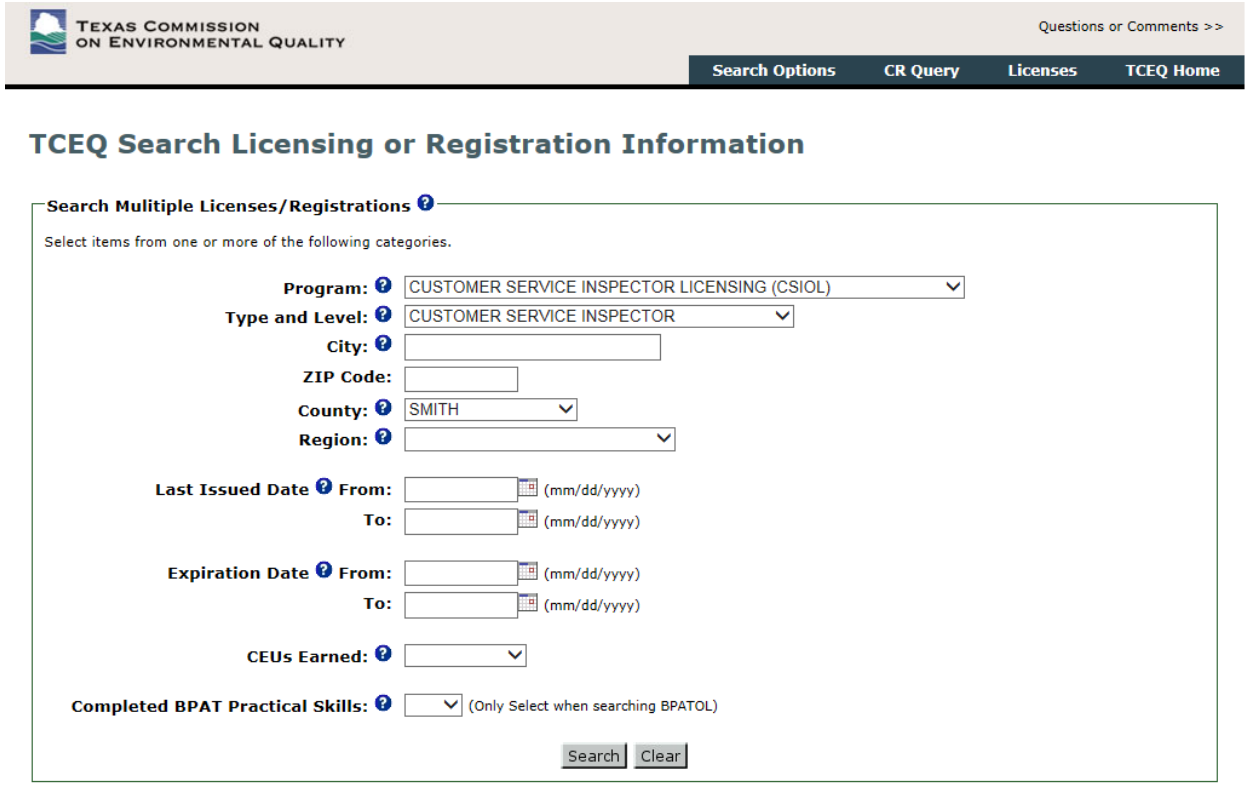

Select the 'Search' button and a list will be generated with all the individuals who hold a CSI license in the county that you selected.

This procedure may be repeated to locate those with a BPAT license in the same county.

If your PWS is near a county line, consider checking the nearby counties.

Follow-up

Are there any items from this Section that should go on your 'to-do list,' or Follow-Up Form?

Section 7: Review Questions

- Which statements are correct?
    1. A PWS must employ a Backflow Prevention Assembly Tester (BPAT).
    2. Lists of local licensed BPATs are available on the TCEQ web site.
    3. To get a BPAT license, you must be a licensed Plumber.
    4. A BPAT can perform CSIs.
- T&M Forms…
    1. Must be completed when a backflow prevention assembly is tested.
    2. Must be retained by the PWS for one year.
    3. Need not be approved by the TCEQ before use, even if they are different from the TCEQ version.
    4. Document failure of backflow prevention assemblies.
    5. Can be electronic.
- Who can install this backflow prevention assembly?
    1. Unlicensed homeowner can install a BPA inside their home.
    2. Employee of Fireline maintenance company can install any BPA.
    3. Unlicensed water operator can install BPA inside distribution system.
    4. Licensed Irrigator can install BPA on fire suppression system.

Notes

Section 8: Managing, Budgeting, and Recordkeeping

As the saying goes: **"If it is not documented, it is not done!"**

A successful program has adequate resources to manage the CCCP and keep accurate records.

More often than not, a failing (or nonexistent) program, is challenged by a failure to provide the necessary resources.

Section 8—Learning objectives

This Section should allow the student to:

- Understand how to evaluate the budget needs for a CCCP,
- Be familiar with management requirements for a CCCP, and
- Learn the recordkeeping requirements for the various elements of the program.

Managing and budgeting

The first step toward ensuring an effective CCCP is for water system officials to have a good understanding of its importance in protecting public health. This understanding will ensure officials are focused and committed to establishing and providing the resources needed to develop and maintain a successful program.

In planning your CCCP's operating budget, please consider the following:

- Personnel needed for field inspections/surveys;
- Personnel needed for maintenance;
- Personnel needed for administrative functions (recordkeeping, management, enforcement, etc.);
- Equipment and maintenance needs; and
- Staff training.

Assigning a program manager will prove to be very beneficial in ensuring that program goals are accomplished. This manager will need to play a large part in ensuring that budgetary requirements and needs are expressed to the appropriate authorities for consideration.

Water system officials must also consider ways to establish the needed revenue, especially if it is not already available. Some ideas for generating revenue include the following:

- Permit requirements and fees for assembly installations;
- Monthly consumption charges or fees;
- Administrative fees for assembly installation; and/or
- Monthly supplemental charge based on the size of the assembly.

Note: This is not meant to be an exhaustive list, but one to get PWS officials thinking about ways they can generate revenue.

Recordkeeping

The second part of this section deals with the importance of **efficient recordkeeping.**

Any system—large or small—can be successful at keeping accurate, up-to-date records. The truth is, the negative effects of poor recordkeeping can hurt water systems of any size.

No matter the size of the water system, or how many backflow assemblies it may have spread out through its distribution system, poor recordkeeping compromises the integrity of the program and the public health and safety of your customers.

Good recordkeeping ensures that the system is taking actions to administer an effective CCCP and is protecting the PWS and its customers from potential contamination.

Ultimate goal:

The goal of good recordkeeping is to maintain accurate, well-documented records and to be able to provide records to appropriate individuals when needed.

People who need the information may be administrators, staff, members of the public, and regulators.

This goal can only be accomplished by records management; that is, the application of proven management techniques to the creation, use, maintenance, retention, preservation, and disposal of records.

An effective records management program should provide for the systematic control of records throughout their life cycle-from creation or receipt, through use and maintenance, to final disposition.

Documentation

Here is a look at the paperwork your water system will need to manage, monitor and maintain.

Customer Service Inspection (CSI) Certificates

The CSI Certificate is used to record the results of the CSI.

Public water systems are required to keep CSI certificates for a period of a minimum of 10 years.

Best practice is to keep them on permanent file, as long as the building or facility inspected exists. Knowledge of the potential hazards previously present at any location may be very helpful to CCCP managers. For example, if a building was previously used as a plating factory, and a change is being made to use it as a daycare facility, the information about the prior use may be critical to the children's safety. Since CSIs are not performed that frequently, there is no overwhelming need to purge these records to save space.

Backflow Prevention Assembly Testing and Maintenance (T&M) Reports

Water systems should ensure or verify the following prior to accepting test reports:

- That the assembly passed the test;
- That the assembly was installed correctly;
- That the gauges used were tested for accuracy;
- That the date when the assembly was tested is within a year of the date when the test gauge was tested for accuracy;
- That the tester's license is current; and
- That the assembly is not a new install needing to be added to the tracking program.

PWSs should develop a procedure to address cases in which they receive a test report indicating a failed test.

Some possible considerations would be to determine the risk posed by that connection, the cause of the failure, the time needed to correct the failing backflow preventer, the date for a follow-up test, and monitor the status of the backflow preventer.

Electronic Record Keeping

It is an observable trend to generate, use, and maintain electronic versions of records.

The TCEQ requirement is for the PWS to retain signed hardcopy original records, or copies in the case of a CSI Certificate.

For this reason, an electronic form is considered an **alternate** form and must receive TCEQ's approval before it may be used.

On a case-by-case basis, a PWS may receive approval to use the internet or another technological medium to comply with TCEQ's record keeping requirements.

The use of unique usernames and passwords in large part serves the same purpose as signing a hardcopy original. Some of the key questions which should be answered when requesting approval are:

- What are the deviations from the form provided in TCEQ regulations?
- What are the precautions taken to prevent data loss?
- What are the precautions taken to ensure data integrity (fraud prevention, consistency with USC test procedures)?

Small water systems: For the number of assemblies expected in most small water systems, the records of the inventory of assemblies, test reports, local BATs, etc., can be kept on a spreadsheet, either manually (on paper), or using commercially available computer software (such as Excel or Access).
Regardless of whether the PWS or assembly owner is responsible for testing, the small PWS should schedule the tests of all assemblies that protect the PWS at the same time of the year. This approach makes it easier for the PWS to administer the testing portion of the cross-connection program. In addition, BPATs will often reduce their testing fees when they can arrange to test several assemblies in one area.

Large water systems: Larger water systems may find that using a site-specific computer database is more efficient to manage and monitor their CCCP. These databases have proven very beneficial in managing testing notifications.

Retail customer responsibility

If the assembly owner is responsible for testing, PWSs should:

- Notify the customer in writing and allow at least one month from the date of notification for the testing to be done and the test report to be returned;
- Include, in the testing notification letter, a statement affirming the understanding that service is provided based on the customer's agreement to test, maintain, and repair the assemblies required by the PWS (if a written service agreement is not in place);
    - Specify the acceptable field testing method (e.g., the DOH field test procedures);
    - Provide a list of local testers (BATs); and
    - Provide a test report form for each assembly owned by the customer.

Section 8—Activities

Budget needs

Consider a small, rural PWS. What budget items do you think should be prioritized if money is tight? What are the highest cost items associated with the CCCP?

Recordkeeping

Does your PWS have complete records? If so, consider the pros and cons of electronic recordkeeping, or merging records with a geographic information system (GIS) system.

Is your PWS in the process of developing your CCCP? What are some steps you could take to improve your recordkeeping procedures?

Follow-up

Are there any items from this Section that should go on your 'to-do list,' or Follow-Up Form?

Section 8: Review Questions

- Customer Service Inspection reports should be…
    1. Retained for 1 year
    2. Retained for 10 years
    3. Purged (shredded) after 10 years
    4. Retained as long as the facility exists
    5. Retained electronically
- What are some considerations for a CCCP's operating budget?
    1. Staff for field inspections/surveys
    2. Mailing reminders and violations
    3. Personnel needed for recordkeeping
    4. Staff training
    5. Donuts for CCCP meetings
- The BPAT T&M form should document…
    1. Whether the assembly passed the test
    2. The serial number of gauges used
    3. That the date when the assembly was tested is within 5 years of the date when the test gauge was tested for accuracy
    4. That a CSI performed the testing and maintenance
    5. That the City was paid for the testing

Works Cited

AWWA. (2015). M14 Manual - Backflow Prevention and Cross-Connection Control - 4th Edition . Denver: AWWA.

EPA (2003). Cross-Connection Control Manual. North Carolina:EPA.

USC "Manual of Cross-Connection Control, Tenth Edition

Attachments

Attachment 1—Rule Language

§290.44. Water Distribution.

Editor's note: The following regulations related to cross-connection control and backflow prevention in potable water distribution systems are extracted from the Texas Administrative Code, available on the Texas Secretary of State's web site at:

<www.sos.state.tx.us/>

§290.44(b) Lead ban. The following provisions apply to the use of lead in plumbing.

§290.44(b)(1) The use of pipes and pipe fittings that contain more than 0.25% lead or solders and flux that contains more than 0.2% lead is prohibited in the following circumstances:

§290.44(b)(1)(A) for installation or repair of any public water supply; and

§290.44(b)(1)(B) for installation or repair of any plumbing in a residential or nonresidential facility providing water for human consumption and connected to a public drinking water supply system.

§290.44(b)(2) This requirement will be waived for lead joints that are necessary for repairs to cast iron pipe.

…

§290.44(h) Backflow, siphonage.

§290.44(h)(1) No water connection from any public drinking water supply system shall be allowed to any residence or establishment where an actual or potential contamination hazard exists unless the public water facilities are protected from contamination.

§290.44(h)(1)(A) At any residence or establishment where an actual or potential contamination hazard exists, additional protection shall be required at the meter in the form of an air gap or backflow prevention assembly. The type of backflow prevention assembly required shall be determined by the

specific potential hazard identified in §290.47(i) of this title (relating to Appendices).

§290.44(h)(1)(B) At any residence or establishment where an actual or potential contamination hazard exists and an adequate internal cross-connection control program is in effect, backflow protection at the water service entrance or meter is not required.

§290.44(h)(1)(B)(i) An adequate internal cross-connection control program shall include an annual inspection and testing by a certified backflow prevention assembly tester on all backflow prevention assemblies used for health hazard protection.

§290.44(h)(1)(B)(ii) Copies of all such inspection and test reports must be obtained and kept on file by the water purveyor.

§290.44(h)(1)(B)(iii) It will be the responsibility of the water purveyor to ensure that these requirements are met.

§290.44(h)(2) No water connection from any public drinking water supply system shall be connected to any condensing, cooling, or industrial process or any other system of nonpotable usage over which the public water supply system officials do not have sanitary control, unless the said connection is made in accordance with the requirements of paragraph (1) of this subsection. Water from such systems cannot be returned to the potable water supply.

§290.44(h)(3) Overhead bulk water dispensing stations must be provided with an air gap between the filling outlet hose and the receiving tank to protect against back siphonage and cross-contamination.

§290.44(h)(4) All backflow prevention assemblies that are required according to this section and associated table located in §290.47(i) of this title shall be tested upon installation by a recognized backflow prevention assembly tester and certified to be operating within specifications. Backflow prevention assemblies which are installed to provide protection against health hazards must also be tested and certified to be operating within specifications at least annually by a recognized backflow prevention assembly tester.

§290.44(h)(4)(A) Recognized backflow prevention assembly testers shall have completed an executive director approved course on cross-connection control and backflow prevention assembly testing, pass an examination administered by the executive director, and hold a current license as a backflow prevention assembly tester.

§290.44(h)(4)(A)(i) Backflow prevention assembly testers are qualified to test and repair assemblies on any domestic, commercial, industrial, or irrigation service.

§290.44(h)(4)(A)(ii) Backflow prevention assembly testers may test and repair assemblies on firelines only if they are permanently employed by an Approved Fireline Contractor. The State Fire Marshal's office requires that any person performing maintenance on firelines must be employed by an Approved Fireline Contractor.

§290.44(h)(4)(B) Gauges used in the testing of backflow prevention assemblies shall be tested for accuracy annually in accordance with the University of Southern California's Manual of Cross-Connection Control or the American Water Works Association Recommended Practice for Backflow Prevention and Cross-Connection Control (Manual M14). Public water systems shall require testers to include test gauge serial numbers on "Test and Maintenance" report forms and ensure testers have gauges tested for accuracy.

§290.44(h)(4)(C) A test report must be completed by the recognized backflow prevention assembly tester for each assembly tested. The signed and dated original must be submitted to the public water supplier for recordkeeping purposes. Any form which varies from the format specified in commission Form No. 20700 must be approved by the executive director prior to being placed in use.

§290.44(h)(5) The use of a backflow prevention assembly at the service connection shall be considered as additional backflow protection and shall not negate the use of backflow protection on internal hazards as outlined and enforced by local plumbing codes.

§290.44(h)(6) At any residence or establishment where there is no actual or potential contamination hazard, a backflow prevention assembly is not required.

...

§290.44(i) Water hauling. When drinking water is distributed by tank truck or trailer, it must be accomplished in the following manner.

...

§290.44(i)(2)(E) Connections for filling and emptying the tank shall be properly protected to prevent the possible entrance of contamination. These openings must be provided with caps and keeper chains.

...

§290.44(j) If a structure is connected to a public water supply system and has a rainwater harvesting system, the structure must have appropriate cross-connection safeguards in accordance with subsection (h)(1) of this section.

§290.44(j)(1) A privately owned rainwater harvesting system with a capacity of more than 500 gallons that is connected to a public water system for a back-up supply shall have a backflow prevention assembly or an air gap installed at the storage facility for the harvested rainwater to ensure physical separation between the rainwater harvesting system and the public water system.

§290.44(j)(2) At each residence or facility where water from a rainwater harvesting system is used for potable purposes and there is a connection to a public water system, the public water system shall ensure that the rainwater harvesting system is installed and maintained by a master plumber or journeyman plumber licensed by the Texas State Board of Plumbing Examiners and who holds an endorsement issued by the Texas State Board of Plumbing Examiners as a Water Supply Protection Specialist.

§290.44(j)(3) A person who intends to connect a rainwater harvesting system to a public water system must give written notice of that intention to the municipality or the owner or operator of the public water system in which the rainwater harvesting system is located.

§290.44(j)(4) The public water system used as a back-up supply for the rainwater harvesting system may be connected only to the water storage tank and may not be connected to the plumbing of a structure.

§290.46 Minimum Acceptable Operating Practices for Public Drinking Water Systems

Editor's note: *The following regulations related to cross-connection control and backflow prevention in potable water distribution systems are extracted from the Texas Administrative Code, available on the Texas Secretary of State's web site at:*

<www.sos.state.tx.us/>

§290.46(f)(3) All public water systems shall maintain a record of operations.

…

§290.46(f)(3)(B) The following records shall be retained for at least three years: …

§290.46(f)(3)(B)(v) the records of backflow prevention device programs; …

§290.46(f)(3)(E) The following records shall be retained for at least ten years: …

§290.46(f)(3)(E)(iv) copies of the Customer Service Inspection reports required by subsection (j) of this section; …

CSI Report Record Retention: *The CSI Report form requires that the form be retained permanently, whereas the rule language references 10 years; therefore a discrepancy exists. The TCEQ recommends that CSI Reports be retained permanently, as long as the inspected facility is in existence.*

…

§290.46(i) Plumbing ordinance. Public water systems must adopt an adequate plumbing ordinance, regulations, or service agreement with provisions for proper enforcement to insure that neither cross-connections nor other unacceptable plumbing practices are permitted (See §290.47(b) of this title (relating to Appendices)). Should sanitary control of the distribution system not reside with the purveyor, the entity retaining sanitary

control shall be responsible for establishing and enforcing adequate regulations in this regard. The use of pipes and pipe fittings that contain more than **0.25%** lead or solders and flux that contain more than **0.2%** lead is prohibited for installation or repair of any public water supply and for installation or repair of any plumbing in a residential or nonresidential facility providing water for human consumption and connected to a public drinking water supply system. This requirement may be waived for lead joints that are necessary for repairs to cast iron pipe.

§290.46(j) Customer service inspections. A customer service inspection certificate shall be completed prior to providing continuous water service to new construction, on any existing service either when the water purveyor has reason to believe that cross-connections or other potential contaminant hazards exist, or after any material improvement, correction, or addition to the private water distribution facilities. Any customer service inspection certificate form which varies from the format found in commission Form No. 20699 must be approved by the executive director prior to being placed in use.

> **§290.46(j)(1)** Individuals with the following credentials shall be recognized as capable of conducting a customer service inspection certification.
>
> > **§290.46(j)(1)(A)** Plumbing Inspectors and Water Supply Protection Specialists licensed by the Texas State Board of Plumbing Examiners (TSBPE).
> >
> > **§290.46(j)(1)(B)** Customer service inspectors who have completed a commission-approved course, passed an examination administered by the executive director, and hold current professional license as a customer service inspector.
>
> **§290.46(j)(2)** As potential contaminant hazards are discovered, they shall be promptly eliminated to prevent possible contamination of the water supplied by the public water system. The existence of a health hazard, as identified in §290.47(i) of this title, shall be considered sufficient grounds for immediate termination of water service. Service can be restored only when the health hazard no longer exists, or until the health hazard has been isolated from the public water system in accordance with §290.44(h) of this title (relating to Water Distribution).
>
> **§290.46(j)(3)** These customer service inspection requirements are not considered acceptable substitutes for and shall not apply to the sanitary control requirements stated in §290.102(a)(5) of this title (relating to General Applicability).

§290.46(k) Interconnection. No physical connection between the distribution system of a public drinking water supply and that of any other water supply shall be permitted unless the other water supply is of a safe, sanitary quality and the interconnection is approved by the executive director.

290.47(f) Appendix F. Assessment of Hazard and Selection of Assemblies

The following table lists many common hazards. It is not an all-inclusive list of the hazards which may be found connected to public water systems.

Premises Isolation: Description of Premises	**Assessment of Hazard**	**Required Assembly**
Aircraft and missile plants	Health	RPBA or AG
Animal feedlots	Health	RPBA or AG
Automotive plants	Health	RPBA or AG
Breweries	Health	RPBA or AG
Canneries, packing houses and rendering plants	Health	RPBA or AG
Commercial car wash facilities	Health	RPBA or AG
Commercial laundries	Health	RPBA or AG
Cold storage facilities	Health	RPBA or AG
Connection to sewer pipe	Health	AG
Dairies	Health	RPBA or AG
Docks and dockside facilities	Health	RPBA or AG
Dye works	Health	RPBA or AG
Food and beverage processing plants	Health	RPBA or AG
Hospitals, morgues, mortuaries, medical clinics, dental clinics, veterinary clinics, autopsy facilities, sanitariums, and medical labs	Health	RPBA or AG
Metal manufacturing, cleaning, processing, and fabrication plants	Health	RPBA or AG
Microchip fabrication facilities	Health	RPBA or AG
Paper and paper products plants	Health	RPBA or AG
Petroleum processing or storage facilities	Health	RPBA or AG
Photo and film processing labs	Health	RPBA or AG
Plants using radioactive material	Health	RPBA or AG
Plating or chemical plants	Health	RPBA or AG
Pleasure-boat marinas	Health	RPBA or AG
Private/Individual/Unmonitored Wells	Health	RPBA or AG
Reclaimed water systems	Health	RPBA or AG
Restricted, classified or other closed facilities	Health	RPBA or AG
Rubber plants	Health	RPBA or AG
Sewage lift stations	Health	RPBA or AG
Sewage treatment plants	Health	RPBA or AG
Slaughter houses	Health	RPBA or AG
Steam plants	Health	RPBA or AG
Tall buildings or elevation differences where the highest outlet is 80 feet or more above the meter	Nonhealth	DCVA

Internal Protection: Description of Cross Connection	**Assessment of Hazard**	**Required Assembly**
Aspirators	Nonhealth†	AVB
Aspirator (medical)	Health	AVB or PVB
Autoclaves	Health	RPBA
Autopsy and mortuary equipment	Health	AVB or PVB
Bedpan washers	Health	AVB or PVB
Connection to industrial fluid systems	Health	RPBA
Connection to plating tanks	Health	RPBA
Connection to salt-water cooling systems	Health	RPBA
Connection to sewer pipe	Health	AG
Cooling towers with chemical additives	Health	AG
Cuspidors	Health	AVB or PVB
Degreasing equipment	Nonhealth†	DCVA
Domestic space-heating boiler	Nonhealth†	RPBA
Dye vats or machines	Health	RPBA
Fire-fighting system (toxic liquid foam concentrates)	Health	RPBA
Flexible shower heads	Nonhealth†	AVB or PVB
Heating equipment		
Commercial	Nonhealth†	RPBA
Domestic	Nonhealth†	DCVA
Hose bibbs	Nonhealth†	AVB
Irrigation systems		
with chemical additives	Health	RPBA
without chemical additives	Nonhealth†	DCVA, AVB,or PVB
Kitchen equipment—Commercial	Nonhealth†	AVB
Lab bench equipment	Health or Nonhealth†	AVB or PVB
Ornamental fountains	Health	AVB or PVB
Swimming pools		
Private	Nonhealth†	PVB or AG
Public	Nonhealth†	RPBA or AG
Sewage pump	Health	AG
Sewage ejectors	Health	AG
Shampoo basins	Nonhealth†	AVB
Specimen tanks	Health	AVB or PVB
Steam generators	Nonhealth†	RPBA
Steam tables	Nonhealth†	AVB
Sterilizers	Health	RPBA
Tank vats or other vessels containing toxic substances	Health	RPBA
Trap primers	Health	AG
Vending machines	Nonhealth†	RPBA or PVB
Watering troughs	Health	AG or PVB

NOTE: AG = air gap; AVB = atmospheric vacuum breaker; DCVA = double check valve backflow prevention assembly; PVB = pressure vacuum breaker; RPBA = reduced-pressure principle backflow prevention assembly

AVBs and PVBs may be used to isolate health hazards under certain conditions, that is, back-siphonage situations. Additional area of premises isolation may be required.

†Where a greater hazard exists (due to toxicity or other potential health impact) additional area protection with RPBAs is required.

The regulations quoted here are from 30 TAC Chapter 30. The official version of these rules is maintained by the Texas Secretary of State's office, and is available at:

www.sos.state.tx.us/

In the case of any unintended deviation between this guide and the official rules, the rules shall apply.

Backflow Prevention Assembly Testers Requirements [From 30 TAC Chapter 30, Subchapter B]

§30.51 Purpose and Applicability

§30.51(a) The purpose of this subchapter is to establish qualifications for issuing and renewing licenses to an individual who tests and repairs backflow prevention assemblies.

§30.51(b) An individual who tests and repairs backflow prevention assemblies must meet the qualifications of this subchapter and be licensed according to Subchapter A of this chapter (relating to Administration of Occupational Licenses and Registrations).

§30.57 Definitions

The following word and term, when used in this subchapter, shall have the following meaning, unless the context clearly indicates otherwise.

Backflow prevention assembly tester (BPAT)--An individual who tests and repairs backflow prevention assemblies.

§30.60 Qualifications for Initial License

To obtain a license, an individual must have:

§30.60(1) met the requirements in Subchapter A of this chapter (relating to Administration of Occupational Licenses and Registrations);

§30.60(2) passed an examination;

§30.60(3) received a high school diploma or equivalent certificate;

§30.60(4) completed an approved 40-hour backflow prevention assembly testing training course; and

§30.60(5) worked at least two years in an approved area which includes, but is not limited to:

§30.60(5)(A) operating or maintaining a public drinking water system;

§30.60(5)(B) installing or repairing residential, commercial, or industrial drinking water treatment equipment;

§30.60(5)(C) installing or repairing lawn irrigation systems;

§30.60(5)(D) performing activities requiring a master or journeyman plumbing license;

§30.60(5)(E) installing or servicing fire suppression sprinkler systems and lines;

§30.60(5)(F) operating or maintaining a domestic wastewater treatment facility;

§30.60(5)(G) performing health inspections that requires a registered sanitarian; or

§30.60(5)(H) performing other duties approved by the executive director.

§30.60(6) An individual may substitute one year of the required experience with:

§30.60(6)(A) one year of college credit (32 semester hours); or

§30.60(6)(B) 20 hours of approved training in addition to the required 40-hour backflow prevention assembly testing training course.

§30.62 Qualifications for License Renewal

To renew a license, an individual must have:

§30.62(1) met the requirements in Subchapter A of this chapter (relating to Administration of Occupational Licenses and Registrations); and

§30.62(2) completed 24 hours of approved continuing education which includes eight hours of approved practical skills training.

Customer Service Inspector Licensing Requirements [From 30 TAC Chapter 30, Subchapter C]

§30.81 Purpose and Applicability

§30.81(a) The purpose of this subchapter is to establish qualifications for issuing and renewing licenses to individuals who conduct and certify customer service inspections.

§30.81(b) An individual who performs customer service inspections must meet the qualifications of this subchapter and be licensed according to Subchapter A of this chapter (relating to Administration of Occupational Licenses and Registrations).

§30.81(c) An endorsement for customer service inspections shall expire when an individual renews a water operator's license or the license expires. To obtain a customer service inspector license, an individual holding an endorsement must submit a new application with the appropriate fee.

§30.81(d) A licensed customer service inspector shall not perform plumbing inspections required under Plumbing Licensing Law 15(a) (Texas Civil Statutes, Volume 17-1/2, Article 6243-101).

§30.87 Definitions

The following words and terms, when used in this subchapter, shall have the following meanings, unless the context clearly indicates otherwise.

§30.87(1) Cross-connection--A physical connection between a public water system and either another supply of unknown or questionable quality, any source which may contain contaminating or polluting substances, or any source of water treated to a lesser degree in the treatment process.

§30.87(2) Customer service inspection--An examination of the private water distribution facility for the purpose of providing or denying water service. The inspection is limited to the identification and prevention of cross-connections, potential contaminant hazards, and illegal lead materials. Customer service inspections are completed before providing continuous water service to new construction, on any existing service where there is reason to believe that cross-connections or other potential contaminant hazards exist, or after any material improvement, correction, or addition to private water distribution facilities (see §290.46(j) of this title (relating to Minimum Acceptable Operating Practices for Public Drinking Water Systems)).

§30.87(3) Customer service inspector--The person who is licensed by the executive director to perform customer service inspections.

§30.90 Qualifications for Initial License

§30.90(a) To obtain a license, an individual must have:

§30.90(a)(1) met the requirements in Subchapter A of this chapter (relating to Administration of Occupational Licenses and Registrations);

§30.90(a)(2) received a high school diploma or equivalent certificate;

§30.90(a)(3) completed an approved customer service inspector training course;

§30.90(a)(4) worked at least two years in an approved area which includes, but is not limited to:

§30.90(a)(4)(A) operation or maintenance of a public drinking water treatment or distribution system;

§30.90(a)(4)(B) performing activities requiring a master or journeyman plumbing license;

§30.90(a)(4)(C) conducting building or construction inspections; or

§30.90(a)(4)(D) performing duties related to this profession approved by the executive director.

§30.90(b) One year of college (32 semester hours) or an additional 20 hours of training credits may be substituted for one year of the experience requirement.

§30.92 Qualifications for License Renewal

To renew a license, an individual must have:

§30.92(1) met the requirements in Subchapter A of this chapter (relating to Administration of Occupational Licenses and Registrations); and

§30.92(2) completed 16 hours of approved continuing education.

§30.95 Exemptions

Plumbing inspectors and water supply protection specialists licensed by the State Board of Plumbing Examiners are exempt from these requirements.

Irrigation Licensing Requirements
[From 30 TAC Chapter 30, Subchapter D]

§30.111 Purpose and Applicability

§30.111(a) The purpose of this subchapter is to establish qualifications for issuing and renewing licenses to individuals who:

§30.111(a)(1) sell, design, install, maintain, alter, repair, or service an irrigation system;

§30.111(a)(2) provide consulting services relating to an irrigation system;

§30.111(a)(3) connect an irrigation system to any water supply; or

§30.111(a)(4) inspect irrigation systems and perform other enforcement duties as an employee or as a contractor.

§30.111(b) An individual who performs any of the tasks listed in subsection (a) of this section must meet the qualifications of this subchapter and be licensed according to Subchapter A of this chapter (relating to Administration of Occupational Licenses and Registrations), unless they are exempt under §30.129 of this title (relating to Exemptions); and must comply with the requirements in Chapter 344 of this title (relating to Landscape Irrigation).

§30.117 Definitions

The following words and terms, when used in this subchapter, shall have the following meanings, unless the context clearly indicates otherwise.

§30.117(1) Installer--An individual who connects irrigation systems to any water supply.

§30.117(2) Irrigator--An individual who sells, designs, installs, maintains, alters, repairs, or services an irrigation system; provides consulting services relating to an irrigation system; or connects an irrigation system to any water supply.

§30.120 Qualifications for Initial License

§30.120(a) To obtain an installer license prior to January 1, 2009, an individual must:

§30.120(a)(1) meet the requirements in Subchapter A of this chapter (relating to Administration of Occupational Licenses and Registrations); and

§30.120(a)(2) pass the applicable examination.

§30.120(b) Effective January 1, 2010, the installer license will no longer be valid and will be replaced by an irrigation technician license. No new installer license applications will be accepted after June 1, 2009. New installer licenses issued after the effective date of these rules will remain valid through December 31, 2009. The fee for initial installer licenses issued after the effective date of these rules will be prorated to reflect the validity period.

§30.120(c) To obtain an irrigator license, an individual must:

§30.120(c)(1) meet the requirements in Subchapter A of this chapter (relating to Administration of Occupational Licenses and Registrations);

§30.120(c)(2) complete and pass the basic irrigator training course; and

§30.120(c)(3) pass all sections of the applicable examination.

§30.120(d) To obtain an irrigation technician license, an individual must:

§30.120(d)(1) meet the requirements in Subchapter A of this chapter;

§30.120(d)(2) complete the basic irrigation technician course; and

§30.120(d)(3) pass the applicable examination.

§30.120(e) To obtain an irrigation inspector license, an individual must:

§30.120(e)(1) meet the requirements in Subchapter A of this chapter.

§30.120(e)(2) successfully complete:

§30.120(e)(2)(A) the basic irrigator training course;

§30.120(e)(2)(B) an approved backflow prevention assembly testing training course; and

§30.120(e)(2)(C) an approved water conservation or water audit course; or

§30.120(e)(2)(D) an approved landscape irrigation inspection course.

§30.120(e)(3) pass the applicable examination.

§30.120(f) An individual is ineligible to obtain an irrigation inspector license if the individual engages in or has financial or advisory interest in an entity that:

§30.120(f)(1) sells, designs, installs, maintains, alters, repairs, or services an irrigation system;

§30.120(f)(2) provides consulting services relating to an irrigation system; or

§30.120(f)(3) connects an irrigation system to any water supply.

§30.122 Qualifications for License Renewal

§30.122(a) To renew an installer license that expires prior to June 1, 2009, an individual must meet the requirements in Subchapter A of this chapter (relating to Administration of Occupational Licenses and Registrations).

§30.122(b) Effective January 1, 2010, the installer license will no longer be valid and will be replaced by an irrigation technician license. No installer license renewal applications will be accepted after December 31, 2008.

§30.122(c) Installer licenses renewed after the effective date of these rules, but prior to June 1, 2009, will remain valid until December 31, 2009. The fee for installer licenses renewed after the effective date of these rules will be prorated to reflect the validity period.

§30.122(d) To renew an irrigator license, an individual must:

§30.122(d)(1) meet the requirements in Subchapter A of this chapter; and

§30.122(d)(2) complete 24 hours of approved training credits.

§30.122(e) To renew an irrigation technician license, an individual must:

§30.122(e)(1) meet the requirements in Subchapter A of this chapter; and

§30.122(e)(2) complete 16 hours of approved training credits.

§30.122(f) To renew an irrigation inspector license, an individual must:

§30.122(f)(1) meet the requirements in Subchapter A of this chapter; and

§30.122(f)(2) complete 24 hours of approved training credits.

§30.129 Exemptions

§30.129(a) The licensing requirements of this chapter do not apply to a person who:

§30.129(a)(1) is licensed by the Texas State Board of Plumbing Examiners and is working within the scope provided by the plumbing laws;

§30.129(a)(2) is registered or licensed as a professional engineer or architect or landscape architect if the work is related to the pursuit of the profession;

§30.129(a)(3) is under the direct supervision of a licensed irrigator and assists in the installation, maintenance, alteration, repair, or service of an irrigation system; or

§30.129(a)(4) is an owner of a business that employs a licensed irrigator to supervise the business' sale, design, consultation, installation, maintenance, alteration, repair, and service of irrigation systems. For the purpose of this subchapter, employs means steadily, uniformly, or habitually working in an employer-employee relationship with the intent to earn a livelihood, as opposed to working casually or occasionally.

§30.129(b) The licensing requirements of this chapter do not apply to:

§30.129(b)(1) irrigation or yard sprinkler work that is performed by a property owner in a building or on premises owned or occupied by the owner as the owner's home;

§30.129(b)(2) irrigation or yard sprinkler repair work, other than extension of an existing irrigation or yard sprinkler system or installation of a replacement system that is:

§30.129(b)(2)(A) performed by a maintenance person who does not act as an irrigator or engage in yard sprinkler construction or maintenance for the public; and

§30.129(b)(2)(B) incidental to and on premises owned by the business in which the person is regularly employed or engaged;

§30.129(b)(3) irrigation or yard sprinkler work that is performed:

§30.129(b)(3)(A) by a regular employee of a railroad who does not act as an irrigator or engage in yard sprinkler construction or maintenance for the public; and

§30.129(b)(3)(B) on the premises or equipment of the railroad;

§30.129(b)(4) irrigation and yard sprinkler work that is performed on public property by a person who is regularly employed by a county, city, town, special district, or political subdivision of the state;

§30.129(b)(5) irrigation or yard sprinkler work that is performed by a person using a garden hose, hose sprinkler, hose-end product, including soaker hose, or agricultural irrigation system;

§30.129(b)(6) an activity that includes a commercial agricultural irrigation system;

§30.129(b)(7) irrigation or yard sprinkler work that is performed by an agriculturist, agronomist, horticulturist, forester, gardener, contract gardener, garden or lawn caretaker, nurseryman, or grader or cultivator of land on land owned by the individual performing the work;

§30.129(b)(8) irrigation or yard sprinkler work that is performed by a member of a property owners' association as defined by Property Code, §202.001, on real property owned by the association or in common by the members of the association if the irrigation or yard sprinkler system water real property that is less than 1/2 acre in size and is used for aesthetic or recreational purposes.

§30.129(c) A person who is exempt from the license requirements of this subchapter shall comply with the standards established by Chapter 344 of this title (relating to Landscape Irrigation). The term irrigation system does not include a system used on or by an agricultural operation as defined in Texas Agriculture Code, §251.002.

Landscape Irrigation Program rules related to Cross-Connection Control Programs

Editor's note: *The following regulations related to cross-connection control and backflow prevention in Landscape Irrigation Programs are extracted from the Texas Administrative Code, available on the Texas Secretary of State's web site at:*

<www.sos.state.tx.us/>

§344.1. Definitions.

The following words and terms, when used in this chapter, have the following meanings, unless the context clearly indicates otherwise.

§344.1(1) Air gap—A complete physical separation between the free flowing discharge end of a potable water supply pipeline and an open or non-pressure receiving vessel.

§344.1(2) Atmospheric Vacuum Breaker—An assembly containing an air inlet valve, a check seat, and an air inlet port. The flow of water into the body causes the air inlet valve to close the air inlet port. When the flow of water stops the air inlet valve falls and forms a check against back-siphonage. At the same time it opens the air inlet port allowing air to enter and satisfy the vacuum. Also known as an Atmospheric Vacuum Breaker Back-siphonage Prevention Assembly.

§344.1(3) Backflow prevention—The mechanical prevention of reverse flow, or back siphonage, of nonpotable water from an irrigation system into the potable water source.

§344.1(4) Backflow prevention assembly—Any assembly used to prevent backflow into a potable water system. The type of assembly used is based on the existing or potential degree of health hazard and backflow condition.

§344.1(5) Completion of irrigation system installation—When the landscape irrigation system has been installed, all minimum standards met, all tests performed, and the irrigator is satisfied that the system is operating correctly.

…

§344.1(7) Cross-connection—An actual or potential connection between a potable water source and an irrigation system that may contain contaminates or pollutants or any source of water that has been treated to a lesser degree in the treatment process.

…

§344.1(10) Double Check Valve—An assembly that is composed of two independently acting, approved check valves, including tightly closed resilient seated shutoff valves attached at each end of the assembly and fitted with properly located resilient seated test cocks. Also known as a Double Check Valve Backflow Prevention Assembly.

…

§344.1(14) Health hazard—A cross-connection or potential cross-connection with an irrigation system that involves any substance that may, if introduced into

the potable water supply, cause death or illness, spread disease, or have a high probability of causing such effects.

...

§344.1(16) Inspector—A licensed plumbing inspector, water district operator, other governmental entity, or irrigation inspector who inspects irrigation systems and performs other enforcement duties for a municipality or water district as an employee or as a contractor.

...

§344.1(18) Irrigation inspector—A person who inspects irrigation systems and performs other enforcement duties for a municipality or water district as an employee or as a contractor and is required to be licensed under Chapter 30 of this title (relating to Occupational Licenses and Registrations).

...

§344.1(30) Major maintenance, alteration, repair, or service—Any activity that involves opening to the atmosphere the irrigation main line at any point prior to the discharge side of any irrigation zone control valve. This includes, but is not limited to, repairing or connecting into a main supply pipe, replacing a zone control valve, or repairing a zone control valve in a manner that opens the system to the atmosphere.

...

§344.1(34) Non-health hazard—A cross-connection or potential cross connection from a landscape irrigation system that involves any substance that generally would not be a health hazard but would constitute a nuisance or be aesthetically objectionable if introduced into the potable water supply.

§344.1(35) Non-potable water—Water that is not suitable for human consumption. Non-potable water sources include, but are not limited to, irrigation systems, lakes, ponds, streams, gray water that is discharged from washing machines, dishwashers or other appliances, water vapor condensate from cooling towers, reclaimed water, and harvested rainwater.

...

§344.1(37) Potable water—Water that is suitable for human consumption.

§344.1(38) Pressure Vacuum Breaker—An assembly containing an independently operating internally loaded check valve and an independently operating loaded air inlet valve located on the discharge side of the check valve. Also known as a Pressure Vacuum Breaker Back-siphonage Prevention Assembly.

§344.1(39) Reclaimed water—Domestic or municipal wastewater which has been treated to a quality suitable for beneficial use, such as landscape irrigation.

...

§344.1(41) Reduced Pressure Principle Backflow Prevention Assembly—An assembly containing two independently acting approved check valves together with a hydraulically operating mechanically independent pressure differential relief valve located between the two check valves and below the first check valve.

§344.24. Local Regulation and Inspection.

§344.24(b) Any city, town, county, other political subdivision of the state, or public water supplier that is not required to adopt rules or ordinances regulating landscape irrigation may adopt a landscape irrigation program by ordinance or rule and may be responsible for inspection of connections to its public water supply system up to and including the backflow prevention device.

§344.36. Duties and Responsibilities of Installers and Irrigation Technicians.

§344.36(a) A licensed installer may connect an irrigation system to a water supply through December 31, 2009. This includes installing an approved backflow prevention method pursuant to §344.50 of this title (relating to Backflow Prevention Methods) when connecting an irrigation system to a potable water supply. Beginning January 1, 2009, a licensed irrigation technician may connect an irrigation system to a water supply, including installing an approved backflow prevention method pursuant to §344.50 of this title and may maintain, alter, repair, service, or direct the installation of irrigation systems under the supervision of an irrigator.

§344.36(b) If an installer or irrigation technician connects an irrigation system to a potable water supply, the connection and installation of the backflow prevention method must be as indicated on the site irrigation plan or as directed by the licensed irrigator and documented on the site irrigation plan.

§344.36(c) Through December 31, 2009, an installer is responsible for the connection of an irrigation system to a water supply under the supervision of a licensed irrigator.

§344.36(d) Beginning January 1, 2009, an irrigation technician, under the supervision of a licensed irrigator, is responsible for:

§344.36(d)(1) connecting an irrigation system to a water supply; and

§344.36(d)(2) providing on-site supervision of the installation, maintenance, alteration, repair, service of an irrigation system including the final walk through with the irrigation system owner or owner's representative to explain the maintenance and operation of the irrigation system.

§344.50. Backflow Prevention Methods.

§344.50(a) Any irrigation system that is connected to a public or private potable water supply must be connected through a commission-approved backflow prevention method. The backflow prevention device must be approved by the American Society of Sanitary Engineers; or the Foundation for Cross-Connection Control and Hydraulic Research, University of Southern California; or the Uniform Plumbing Code; or any other laboratory that has equivalent capabilities for both the laboratory and field evaluation of backflow prevention assemblies. The backflow prevention device must be installed in accordance with the laboratory approval standards or if the approval does not include specific installation information, the manufacturer's current published recommendations.

§344.50(b) If conditions that present a health hazard exist, one of the following methods must be used to prevent backflow;

§344.50(b)(1) An air gap may be used if:

§344.50(b)(1)(A) there is an unobstructed physical separation; and

§344.50(b)(1)(B) the distance from the lowest point of the water supply outlet to the flood rim of the fixture or assembly into which the outlet discharges is at least one inch or twice the diameter of the water supply outlet, whichever is greater.

§344.50(b)(2) Reduced pressure principle backflow prevention assemblies may be used if:

§344.50(b)(2)(A) the device is installed at a minimum of 12 inches above ground in a location that will ensure that the assembly will not be submerged; and

§344.50(b)(2)(B) drainage is provided for any water that may be discharged through the assembly relief valve.

§344.50(b)(3) Pressure vacuum breakers may be used if:

§344.50(b)(3)(A) no back-pressure condition will occur; and

§344.50(b)(3)(B) the device is installed at a minimum of 12 inches above any downstream piping and the highest downstream opening. Pop-up sprinklers are measured from the retracted position from the top of the sprinkler.

§344.50(b)(4) Atmospheric vacuum breakers may be used if:

§344.50(b)(4)(A) no back-pressure will be present;

§344.50(b)(4)(B) there are no shutoff valves downstream from the atmospheric vacuum breaker;

§344.50(b)(4)(C) the device is installed at a minimum of six inches above any downstream piping and the highest downstream opening. Pop-up sprinklers are measured from the retracted position from the top of the sprinkler;

§344.50(b)(4)(D) there is no continuous pressure on the supply side of the atmospheric vacuum breaker for more than 12 hours in any 24-hour period; and

§344.50(b)(4)(E) a separate atmospheric vacuum breaker is installed on the discharge side of each irrigation control valve, between the valve and all the emission devices that the valve controls.

§344.50(c) Backflow prevention devices used in applications designated as health hazards must be tested upon installation and annually thereafter.

§344.50(d) If there are no conditions that present a health hazard double check valve backflow prevention assemblies may be used to prevent backflow if the device is tested upon installation and:

§344.50(d)(1) a local regulatory authority does not prohibit the use of a double check valve;

§344.50(d)(2) backpressure caused by an elevation of pressure in the discharge piping by pump or elevation of piping above the supply pressure which could cause a reversal of the normal flow of water or back-siphonage conditions caused by a reduced or negative pressure in the irrigation system exist; and

§344.50(d)(3) test cocks are used for testing only.

§344.50(e) If a double check valve is installed below ground:

§344.50(e)(1) test cocks must be plugged, except when the double check valve is being tested;

§344.50(e)(2) test cock plugs must be threaded, water-tight, and made of non-ferrous material;

§344.50(e)(3) a y-type strainer is installed on the inlet side of the double check valve;

§344.50(e)(4) there must be a clearance between any fill material and the bottom of the double check valve to allow space for testing and repair; and

§344.50(e)(5) there must be space on the side of the double check valve to test and repair the double check valve.

§344.51. Specific Conditions and Cross-Connection Control.

§344.51(a) Before any chemical is added to an irrigation system connected to any potable water supply, the irrigation system must be connected through a reduced pressure principle backflow prevention assembly or air gap.

§344.51(b) Connection of more than one water source to an irrigation system presents the potential for contamination of the potable water supply if backflow occurs. Therefore, connection of any additional water source to an irrigation system that is connected to the potable water supply can only be done if the irrigation system is connected to the potable water supply through a reduced-pressure principle backflow prevention assembly or an air gap.

§344.51(c) Irrigation system components with chemical additives induced by aspiration, injection, or emission system connected to any potable water supply must be connected through a reduced pressure principle backflow device.

§344.51(d) If an irrigation system is designed or installed on a property that is served by an on-site sewage facility, as defined in Chapter 285 of this title (relating to On-Site Sewage Facilities), then:

> **§344.51(d)(1)** all irrigation piping and valves must meet the separation distances from the On-Site Sewage Facilities system as required for a private water line in §285.91(10) of this title (relating to Minimum Required Separation Distances for On-Site Sewage Facilities);
>
> **§344.51(d)(2)** any connections using a private or public potable water source must be connected to the water source through a reduced pressure principle backflow prevention assembly as defined in §344.50 of this title (relating to Backflow Prevention Methods); and
>
> **§344.51(d)(3)** any water from the irrigation system that is applied to the surface of the area utilized by the On-Site Sewage Facility system must be controlled on a separate irrigation zone or zones so as to allow complete control of any irrigation to that area so that there will not be excess water that would prevent the On-Site Sewage Facilities system from operating effectively.

§344.52. Installation of Backflow Prevention Device.

§344.52(a) If an irrigation system is connected to a potable water supply and requires major maintenance, alteration, repair, or service, the system must be connected to the potable water supply through an approved, properly installed backflow prevention method as defined in this title before any major maintenance, alteration, repair, or service is performed.

§344.52(b) If an irrigation system is connected to a potable water supply through a double check valve, pressure vacuum breaker, or reduced pressure principle backflow assembly and includes an automatic master valve on the system, the automatic master valve must be installed on the discharge side of the backflow prevention assembly.

§344.52(c) The irrigator shall ensure the backflow prevention device is tested prior to being placed in service and the test results provided to the local water purveyor and the irrigation system's owner or owner's representative within 10 business days of testing of the backflow prevention device.

§344.61. Minimum Standards for the Design of the Irrigation Plan.

§344.61(c) All irrigation plans used for construction must be drawn to scale. The plan must include, at a minimum, the following information:

...

§344.61(c)(7) location, type, and size of each:

...

§344.61(c)(7)(B) backflow prevention device;

...

§344.62. Minimum Design and Installation Requirements.

§344.62(k) Isolation valve. All new irrigation systems must include an isolation valve between the water meter and the backflow prevention device.

§344.62(n) Water contained within the piping of an irrigation system is deemed to be non-potable. ...

§344.65. Reclaimed Water.

Reclaimed water may be utilized in landscape irrigation systems if:

§344.65(4) the domestic potable water line is connected using an air gap or a reduced pressure principle backflow prevention device, in accordance with §290.47(i) of this title (relating to Appendices);

§344.65(6) backflow prevention on the reclaimed water supply line shall be in accordance with the regulations of the water purveyor.

Attachment 2—Flushing programs

Flushing is an important activity to keep lines clean and fresh—not stagnant.

Dead-end main (DEM) flushing

Most PWSs are familiar with the required monthly dead-end main (DEM) flushing, which is described in **Appendix 5** of this manual. DEM flushing is intended to remove sediment and stagnant water. Generally, this is accomplished by slowly opening fire hydrants or flush valves at the end of mains.

DEMs may be large, but they also may be small, for example in non-looped cul de sacs. Depending on usage, DEMs may need more or less flushing.

Best practice is to measure the disinfectant residual and ensure that a level over the minimum is achieved before ceasing to flush.

Unidirectional flushing (UDF)

Unidirectional flushing (UDF) is a way to flush any area of distribution to remove sediment. In order to remove settled material, the velocity of the water has to be fast enough to pick up the particles—as shown in the following figure. The velocity needed is over 5 feet per second (fps).

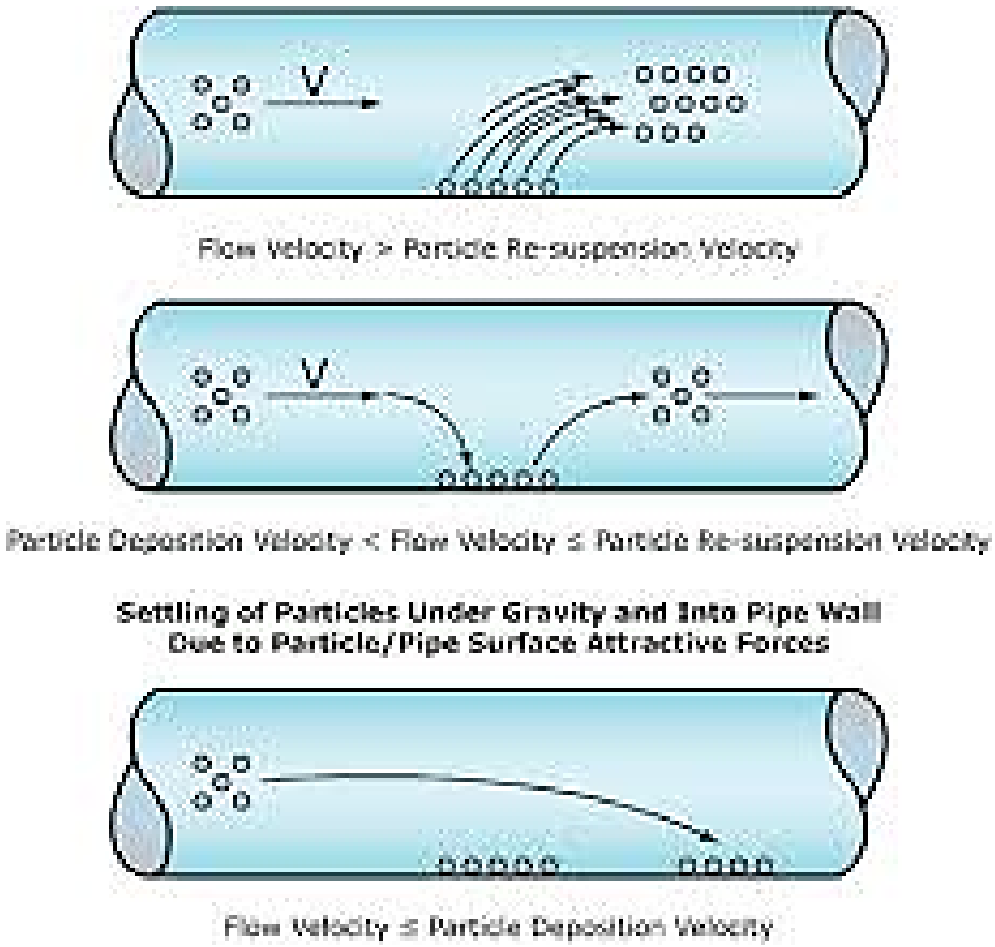

Settling and resuspension in distribution pipes

In order to achieve the velocity of 5 fps or more, the area to be flushed must be identified and managed to make the water flow 'unidirectionally.' In normal flushing, a hydrant is just opened, and water is allowed to flow through the entire area, as shown in the figure below.

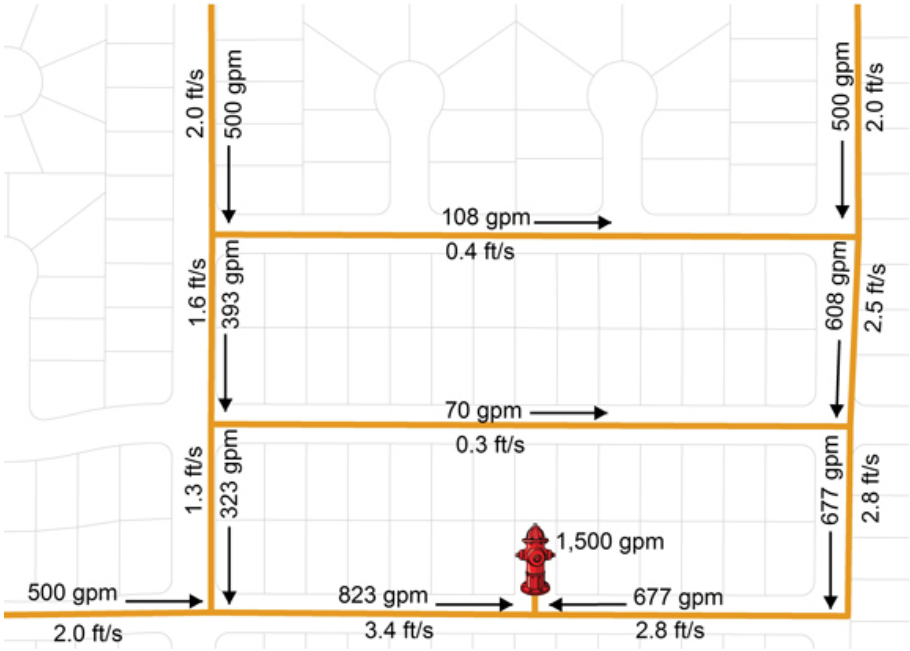

Non-UDF flushing, where water is allowed to flow freely

When UDF is practiced, valves must be managed to force water into a pathway that makes it go faster than normal, as shown in the following figure.

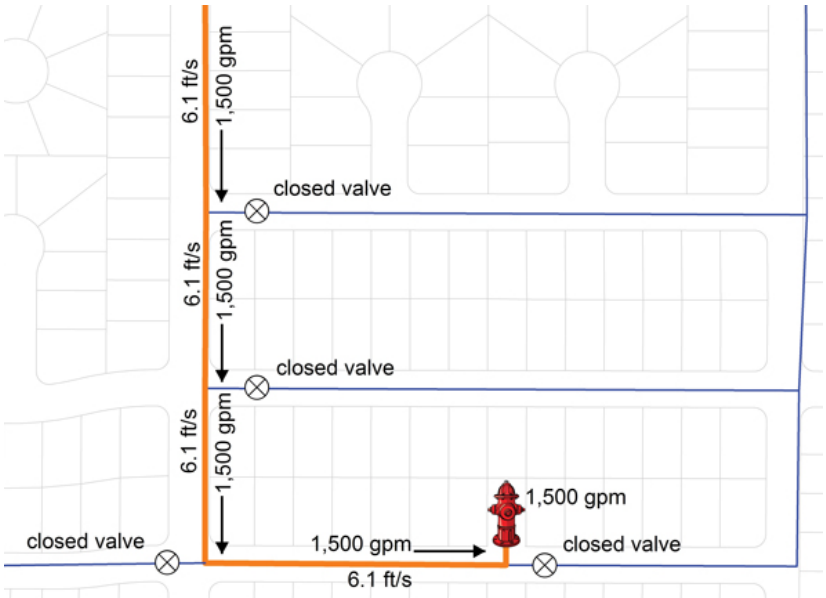

UDF flushing, where water is forced to flow rapidly, in a single path

Clearly, the valves must be cycled so that each pipe gets the single flow, sequentially.

Notes

Attachment 3—DAM 12 Pre-Test

Student (optional): _____

Training location: _____

Date: _____

<u>Pre-test: Circle ALL answers that apply</u>

1. The two hydraulic mechanisms by which backflow occurs:
    a) Backpressure
    b) Hydraulic jump
    c) Temperature Changes
    d) Backsiphonage
    e) None of the above
2. A cross-connection that is classified as a health hazard constitutes only a nuisance or is aesthetically objectionable.
    a) True
    b) False
3. The following are considered management programs related to a Cross-Connection Control Program (CCCP):
    a) Containment
    b) Consolidated
    c) Expanded
    d) Joint
4. How frequently should Reduced Pressure Principle Backflow Assemblies (RPBA) be tested?
    a) Every 2 years
    b) Monthly
    c) Every 3 years
    d) Annually
5. A plumber can test RPBAs without a BPAT license from the TCEQ.
    a) True
    b) False

Student (optional): _____

6. The TCEQ's records retention policy requires that the PWS maintain copies of Customer Service Inspections (CSI) for:
   a) 6 months
   b) 5 years
   c) 3 years
   d) 10 years
   e) For as long as the building exists
7. What's the most important component of an effective Cross-Connection Control Program (CCCP)?
   a) Hitman
   b) Large staff
   c) CSI inspections
   d) Money
8. Internal backflow protection is not needed when a PWS chooses to install a backflow preventer at the meter, often referred to as containment or premises isolation.
   a) True
   b) False
9. Possible hazards needing backflow protection include:
   a) Mortuaries
   b) Septic fields near irrigation systems
   c) Hospitals
   d) Veterinarian offices
   e) Distilleries
10. Municipal water systems must adopt a plumbing code if they have a population of ___ or greater?
   a) 3,000
   b) 5,000
   c) 10,000
   d) 2,000

Attachment 4—DAM 12 Post-Test

Student (optional): _____

Training location: _____

Pre-test: Circle ALL answers that apply

1. The two hydraulic mechanisms by which backflow occurs:
    a) Backpressure
    b) Hydraulic jump
    c) Temperature change
    d) Backsiphonage
    e) None of the above
2. A cross-connection that is classified as a health hazard constitutes only a nuisance or is aesthetically objectionable.
    a) True
    b) False
3. The following are considered management programs related to a Cross-Connection Control Program (CCCP):
    a) Containment
    b) Consolidated
    c) Expanded
    d) Joint
4. How frequently should reduced-pressure principle backflow assemblies (RPBA) be tested?
    a) Every 2 years
    b) Monthly
    c) Every 3 years
    d) Annually
5. A plumber can test RPBAs without a BPAT license from the TCEQ.
    a) True
    b) False

Attachment 4, continued—DAM 12 Post-Test (Page 2)

Student (optional): _____

6. The TCEQ's records retention policy requires that the PWS maintain copies of Customer Service Inspections (CSI) for:

a) 6 months
b) 5 years
c) 3 years
d) 10 years
e) As long as the building exists

7. What's the most important component of an effective Cross-Connection Control Program (CCCP)?

a) Hitman
b) Large staff
c) CSI inspections
d) Money

8. Internal backflow protection is not needed when a water system chooses to install a backflow preventer at the meter, often referred to as containment or premises isolation.

a) True
b) False

9. Possible hazards needing backflow protection include:

a) Mortuaries
b) Septic fields near irrigation systems
c) Hospitals
d) Veterinarian offices
e) Distilleries

10. Municipal water systems must adopt a plumbing code if they have a population of ___ or greater?

a) 3,000
b) 5,000
c) 10,000
d) 2,000

Attachment 5—DAM 12 Section Priority Form

Instructions: *The* ***Section Priority Form*** *is intended to provide the instructor with an understanding of the specific needs the water system may have related to developing and managing an effective Cross-Connection Control Program (CCCP).*

*Training location:*_____*Position:*_____

DAM 12 *has* ***8 Sections****, each emphasizing a different area.*
Prioritize the Sections according your specific needs.

① High Priority ② Medium Priority ③ Average Priority ④ Don't need this

Section 1—The Basics—Hazards and Assemblies: I need to learn more or refresh my knowledge about backflow events, hazards, and backflow prevention devices.	①②③④
Section 2—Designing a Program that Fits: I want to be able to help develop a new program, or improve our existing program.	①②③④
Section 3—Involving Stakeholders—The 3 Cs: I need to know how to involve the right stakeholders in our CCCP.	①②③④
Section 4—Establishing Enforcement Authority: Establishing the proper enforcement authority in order to effectively enforce a CCCP is important to me.	①②③④
Section 5—Customer Service Inspections: I want to learn about how Customer Service Inspections (CSIs) are part of an effective CCCP.	①②③④
Section 6—Developing and Implementing an Incident Action Plan: I am interested in learning more about how Incident Action Plans (IAPs) protect our customers against a potential cross-connection hazard.	①②③④
Section 7—Certifications, Licensing and Testing: I need more information about what certifications and licensing are required to ensure that proper backflow prevention devices are installed and that they are properly maintained and functional.	①②③④
Section 8—Managing, Budgeting and Recordkeeping: I would like more information about what paperwork is needed to manage an efficient CCCP.	①②③④

Notes

Attachment 6—DAM 12 Course Evaluation

To be completed by trainees who participated in the DAM 12.

Training location: _____ Date:

Instructor Name: _____

① Strongly Agree ② Agree ③ No Opinion ④ Disagree ⑤ Strongly Disagree

1. The **DAM 12** agenda did not accurately describe the training.	① ② ③ ④ ⑤
2. The technical level of **DAM 12** activities was appropriate.	① ② ③ ④ ⑤
3. The **.** activities were reasonably timed.	① ② ③ ④ ⑤
4. The handouts were understandable and helpful .	① ② ③ ④ ⑤
5. The graphics in **DAM 12** helped me understand the subjects covered.	① ② ③ ④ ⑤
6. The workshops in **DAM 12** helped me understand the material better.	① ② ③ ④ ⑤
7. **Section 1**. **The Basics-Hazards and Assemblies** adequately covered potential cross-connection hazards.	① ② ③ ④ ⑤
8. **Section 2. Designing a Program that Fits** adequately explained available cross-connection control programs.	① ② ③ ④ ⑤
9. **Section 3 Involving Stakeholders: The 3C's"** adequately provided ideas for stakeholder involvement related to improving a CCCP.	① ② ③ ④ ⑤
10. **Section 4 Establishing Enforcement Authority** e**xplained how to** develop or implement an enforcement for a CCCP.	① ② ③ ④ ⑤
11. **Section 5 Customer Service Inspections (CCSIs)** covered the importance of CSIs in enforcing and managing an effective CCCP.	① ② ③ ④ ⑤
12. **Section 6 Developing and Implementing an Incident Action Plan** adequately covered the importance of developing an incident action plan to ensure proper response to backflow incidents.	① ② ③ ④ ⑤
13. **Section7 Certifications, Licensing and Testing** gave me an adequate understanding of who can perform CSIs and maintain and test backflow prevention devices.	① ② ③ ④ ⑤
14. **Section 8 Managing, Budgeting and Recordkeeping** helped me understand the importance of budgeting, managing and maintaining paperwork for a CCCP.	① ② ③ ④ ⑤

Attachment 6, continued—DAM 12 Course Evaluation (Page 2)

Training location: _____ Date: _____

To be completed by trainees who participated in the DAM 12.

15. What could we change to improve this Directed Assistance Module?

16. What was not explained well enough?

17. What areas did we spend too much time on?

18. What areas did we spend too little time on?

19. What are some other issues where you feel more training is needed?

20. What other comments or suggestions do you have?

Attachment 7—DAM 12 Follow-Up Form

It is a good idea to make a 'to-do' list of things that come up, but which can't be finished on the day of the DAM. You can use your own paper, or **detach this from the DAM Student Guide first thing** in the day. This form is intended to help you follow up on any items that you did not finish during the DAM itself. During the day, jot down items that you need to follow up on from each workshop.

Module 1: The Basics—Hazards and Assemblies

Action Item	**Who?**	**When?**

Module 2: Designing a Program that Fits

Action Item	**Who?**	**When?**

Module 3: Involving Stakeholders: The 3 Cs

Action Item	**Who?**	**When?**

Module 4: Establishing Enforcement Authority

Action Item	**Who?**	**When?**

Attachment 7, continued—DAM 12 Follow-Up Form (Page 2)

Module 5: Customer Service Inspections (CSIs)

Action Item	Who?	When?

Module 6: Developing and Implementing an Incident Action Plan

Action Item	Who?	When?

Module 7: Certifications, Licensing, and Testing

Action Item	Who?	When?

Module 8: Managing, Budgeting, and Recordkeeping

Action Item	Who?	When?

Revision table

Date	Action	Comments
March 2016	Created	
2/23/17	Revised: Version 2	Based on Quality Control (QC) review
1/12/19	Minor revisions	Formatting
8/24/19	Minor revisions	Accessibility