TEXAS OPTIMIZATION PROGRAM (TOP)
DIRECTED ASSISTANCE MODULE (DAM) 2B

JAR TESTING:

HOW TO DESIGN AND PERFORM REPRESENTATIVE JAR TESTS FOR A SURFACE WATER TREATMENT PLANT (SWTP)

STUDENT GUIDE

Most recent revision date: September 8, 2019

Notes

Table of Contents

Figures v
Tables v
Definition of Terms, Acronyms, and Symbols vii
Bottom Line: (Revise to be Intro, learning goals) ..... **Error! Bookmark not defined.**

Purpose of surface water treatment, role of coagulation 2
SWTP barriers 2
Removal and inactivation 2
Turbidity monitoring 4
What makes coagulation necessary? 5
Factors Influencing Coagulation: 10

Velocity Gradient 11
Definition of Velocity Gradient: 11
Calculation of Mean Velocity Gradient "G" Using Power Input: 11
Calculation of Mean Velocity Gradient "G" Using Head Loss: 11
Calculation of Mean Velocity Gradient "G" for Air Diffusers: 12
Time Considerations: 13
Temperature and Viscosity: 14
Types of Mixers: 15
Hydraulic Mixers 16
Mechanical Mixers 21

Sedimentation Basins 26
Definition of Surface Overflow Rate: 26
Relation of SOR to Settling Rate: 28
Definition of Hydraulic Detention Time (HDT): 29
Bottom Line: 29
Square versus Round Jars: 30
Table of Conversion Factors: 32

Attachment 1 to the Student Guide 36

Chemical Feed Rate and Dosage Calculations Form 36

Directed Assistance Module 2-B 36

Establishing Appropriate Chemical Feed Rates 36

Using Representative Jar Testing 36

Chemical Feed Rate Measurement and Dosage Calculations 1
Chemical Feed Rate Measurements and Dosage Calculations 1

Chemical Feed Rate Measurement and Dosage Calculations *(continued)*....3
II. Chemical Feeder Calibration Data [1, 2] 3
Attachment 2 to the Student Guide 4
Chemical Dosage Calculation 4
Directed Assistance Module 2-B 4
Establishing Appropriate Chemical Feed Rates.....4
Using Representative Jar Testing.....4
Chemical Dosage Calculations.....1
Chemical Dosage Calculations (continued) 2
Summary of Methods for Calculating the Dose of Liquid Chemicals.....2
Chemical Dosage Calculations *(continued)* 4
Volume Based Dosage Calculations for Liquid Aluminum Sulfate (Alum) 6
(and other liquid chemicals) 6
Feed Rate to Dosage Calculation for Volume Based Doses 6
Dosage to Feed Rate Calculation for Volume Based Doses 6
Stock Solution Calculations for Volume Based Doses 7
Liquid Weight Based Dosage Calculations for Liquid Aluminum Sulfate (Alum).....9
(and other liquid chemicals) 9
Feed Rate to Dosage Calculation for Liquid Weight Doses.....9
Feed Rate to Dosage Calculation for Liquid Weight Doses (Continued). Error! Bookmark not defined.
Dosage to Feed Rate Calculation for Liquid Weight Doses.....10
Stock Solution Calculation for Liquid Weight Based Doses.....11
Dry Weight Based Dosage Calculations for Liquid Aluminum Sulfate (Alum) and Other Liquid Chemicals 13
Feed Rate to Dosage Calculation for Dry Weight Based Doses of Liquid Alum 13
Feed Rate to Dosage Calculation for Dry Weight Based Doses of Liquid Alum (continued)..... Error! Bookmark not defined.
Dosage to Feed Rate Calculations for Dry Weight Based Doses of Liquid Alum or Other Chemicals Mixed with Water 15
Stock Solution Calculations for Dry Weight Based Doses of Liquid Alum...16
or Other Chemicals Mixed with Water 16
Dosage Calculations for Gaseous Chemicals and Dry Chemicals.....17

Feed Rate to Dosage Calculations for Gas Chemicals **17**
Feed Rate to Dosage Calculations for Solid Dry Chemicals **17**
Dosage to Feed Rate Calculations for Gas Chemicals **18**
Dosage to Feed Rate Calculations for Solid Dry Chemicals **19**
Stock Solution Calculations for Dry Weight Based Doses of Liquid Alum ... **19**
or Other Chemicals Mixed with Water) **19**
Attachment 3 to the Student Guide **20**
Preparing Stock Solutions **20**
Directed Assistance Module 2-B **20**
Establishing Appropriate Chemical Feed Rates **20**
Using Representative Jar Testing **20**
Definitions **1**
Preparing Stock Solutions **2**
Preparing Stock Solutions *(continued)* **3**
Attachment 4 to the Student Guide **2**
Jar Testing Form **2**
Directed Assistance Module 2-B **2**
Establishing Appropriate Chemical Feed Rates **2**
Using Representative Jar Testing **2**
Jar Testing Form **1**
More Than One Type of Jar Test 2
Jar Testing (continued) **4**
Conventional Jar Tests **4**
Initial rapid mix conditions 4
Dynamic Jar Tests **5**
Attachment 5 to the Student Guide **7**
Jar Test Comparison Form **7**
Directed Assistance Module 2-B **7**
Establishing Appropriate Chemical Feed Rates **7**
Using Representative Jar Testing **7**
JAR TEST COMPARISON FORM **1**
Conventions in this Module **5**

Multiplied by: 5
Divided by: 5
Concentration (Conc.): 5
Residual (Res.) 5
Flow Rates versus Feed Rates: 6
Milligrams per Liter (mg/L) and parts per million (ppm): 6
Use of Exponents: 6
Order of Execution in Equations: 6
Attachment 6 to the Student Guide 7
Calculating Chemical Feed Rates 7
Directed Assistance Module 2-B 7
Establishing Appropriate Chemical Feed Rates 7
Using Representative Jar Testing 7
Calculating Chemical Feed Rates 1
Calculating Chemical Feed Rates *(continued)* 2

Figures

Figure 1: Multi-barrier Approach to Producing Safe Drinking Water 3
Figure 2: Good Coagulation is Key to Effective Sedimentation..... 4
Figure 3: Size Ranges for Particles Found in Untreated Surface Water 6
Figure 4: Natural State of Small Particles in Water 7
Figure 5: Reactions Between Particles and Polymers..... 9
Figure 6: Types of Mixing Devices 15
Figure 7: Head Losses in Pipe Flow Hydraulic Mixing..... 17
Figure 8: Head Loss in a Baffled Basin 18
Figure 9: Venturi Section Mixer..... 18
Figure 10: Hydraulic Jump Mixer..... 19
Figure 11: Weir Mixer 20
Figure 12: In-line Static Mixer 20
Figure 14: Mechanical Mixers..... 22
Figure 15: In-line Mechanical Mixer 23
Figure 16: Horizontal Paddle Flocculator 24
Figure 17: Comparison of Turbulence in Round and Square Jars 30
Figure 18: Square 2-Liter Jars 32

Tables

Table 1: Definition of Terms, Acronyms, and Symbols vii
Table 2: Relative Sizes and Characteristics of Particles (with a Specific Gravity of 2.65) in Water 6
Table 3: Typical Detention Times, Velocity Gradients and Gt Factors for Rapid Mix Units 13
Table 4: Water Temperature and Viscosity 14
Table 5: Detention Time Factors 14
Table 6: Impeller Power Number (Np) 22
Table 7: Typical Velocity Gradients in Tapered Mixing 24
Table 8: General Design Criteria for Flocculation Basins [(a)] 25
Table 9: Configuration for Common Sedimentation Basins..... 27
Table 10: EPA Criteria for Process Evaluation: Sedimentation 28

Table 11: Settling Velocity of Selected Flocs 28
Table 12: Recommended Sedimentation/Clarification 29
Table 13: Conversion Factors 33

Definition of Terms, Acronyms, and Symbols

Term, Acronym, Symbol	Definition
A	Area (square feet)
Anionic	Negatively charged
B	Bend head losses in a pipe
bbl	Barrels
Cationic	Positively charged
Crypto	Cryptosporidium
EPA	Environmental Protection Agency
F	Friction head losses in a pipe
ft	foot (feet)
ft^2	Square foot (Square feet)
ft^3	Cubic foot (Cubic feet)
G	Velocity gradient (sec^{-1})
g	Acceleration due to gravity (32.2 ft/sec^2)
gpg	Grains-per-gallon
gpm	Gallons per minute
gr	Grains
Gt	Gt Factor: Velocity gradient times the time of contact
h	Head (feet of water)
HDT	Hydraulic detention time
H_L	Head loss (feet of water)
hrs	Hours
in	Inches
in^2	Square inch(es)
Kg	Kilograms
L	Liters
lb (lbs.)	Pound (Pounds)
m	Meter(s)

Term, Acronym, Symbol	Definition
m^2	Square meter(s)
m^3	Cubic meter(s)
mg	Milligram(s)
MG	Millions of gallons
mg/L	Milligrams per liter
MGD	Millions of gallons per day
min	Minute(s)
ml	Milliliters
mm	Millimeter(s)
Nonionic	With no ionic charge
N_P	Propeller number
NTU	Nephalometric Turbidity Unit
^oC	Degrees Centigrade
^oF	Degrees Fahrenheit
pH	A measure of the acidity or basicity of a compound
ppm	Parts-per-million
Q	Flow rate (gpm, MGD, etc.)
Sec	Seconds
SOR	Surface overflow rate
Stds.	Standards
T (t)	Time
TSC	Technical Support Center
V	Volume (cubic feet, gallons, MG, etc.)
Wt	Weight of one cubic foot of water (62.4 pounds)
Yrs	Years
μ	Viscosity [pound-seconds/square foot]

Learning goals

In this DAM, we expect you to learn:

- How to mix stock solutions for jar testing,
- How to perform a jar test,
- Pros and cons of different jar testing methods

A successful jar testing procedure must successfully incorporate all the mixing factors for flash mixing and flocculation and settling in order to be an effective predictor of the performance of the plant.

Historically, operators attend a surface water class or a laboratory class where a jar test is demonstrated and they come away with the idea that the way they were shown is exactly how it is always done. This is not, in fact, the way this training should be interpreted. Classroom demonstrations are fine, excepting that they are rarely adapted to a plant where water is being treated. In other words, they are not representative of what is going on in your particular plant.

In the following pages, we discuss 16 different mixing devices, and this does not include all the mixing units commonly found in Texas. We also discuss elements of floc formation and settling. Representative jar testing means that the jar test procedure will imitate the coagulation, flocculation, and settling conducted in the water plant. There is no single jar test procedure will duplicate all of these processes for all plants, however, experience shows that jar test procedures can be individually tailored to accurately predict performance for almost every plant.

Purpose of surface water treatment, role of coagulation

The purpose of surface water treatment is to eliminate pathogens, which are microbes that can make people sick. Lakes and rivers are subject to contamination by numerous sources of pathogens, from septic fields to animal waste. Because of the potential to transmit pathogens or other harmful constituents in surface water to the customers, surface water treatment plants (SWTPs) use a multi-barrier approach to remove and inactivate bacteria, viruses, and protozoa and protect public health.

SWTP barriers

Removal and inactivation

Some pathogens are easily killed by a disinfectant. For example, almost all known waterborne viruses are killed by chlorine after four minutes of contact with 1 mg/L of free chlorine. However, other pathogens are very resistant to disinfectants. For example, a *Cryptosporidium* oocyst remains infective after half-an-hour of contact with 25 mg/L of free chlorine. Therefore, some pathogens must be physically removed from the water.

Therefore, SWTPs use a series of treatment "barriers" to inactivate (kill) and/or physically remove pathogens, as shown in Figure 1.

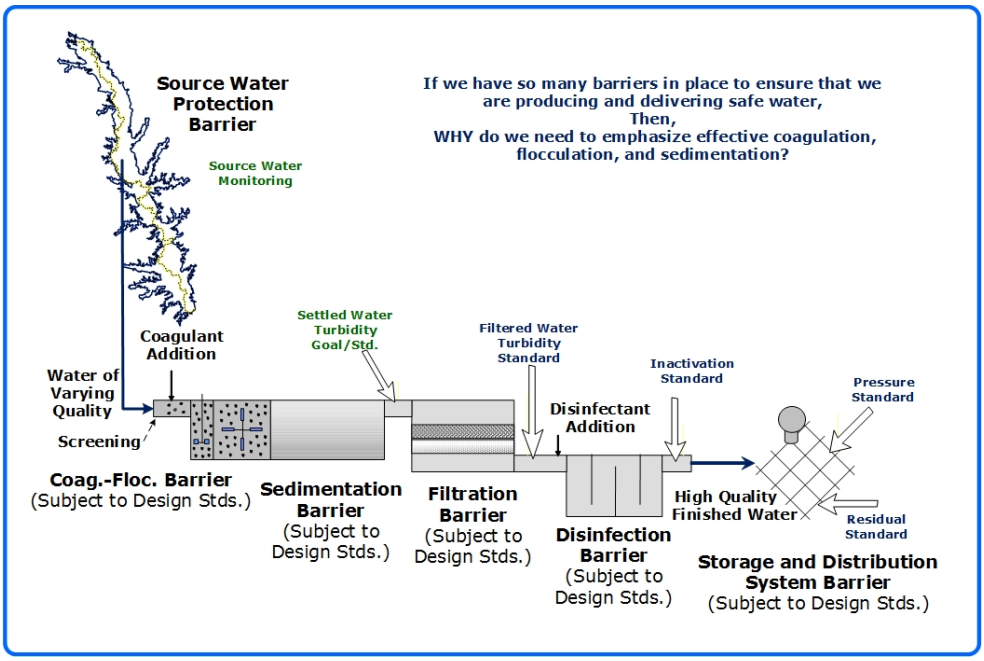

Figure 1: Multi-barrier treatment units for removing and inactivating pathogens

The barriers applicable to SWTPs include actual treatment processes and equipment, and also programs—like monitoring, maintenance, etc.

Generally, the treatment barriers present in a SWTP include:

- **Source water protection**—elimination of potential sources of pathogens,
- **Coagulation, flocculation, and sedimentation**—removal of potential pathogens,
- **Filtration**—removal, and
- **Disinfection** for inactivation (kill).

The programmatic barriers in a SWTP include:

- Disinfectant monitoring (CT study, etc.),
- Turbidity monitoring, and
- Standards for operation, maintenance, and safety.

There are also multiple barriers to the regrowth and persistence of pathogens in the distribution system, but those are outside the scope of this DAM.

Each barrier has a role, and the topic of this DAM is the role of coagulation, flocculation, and sedimentation, and how to make sure that they are doing the job they are intended for, using jar tests.

Turbidity monitoring

By monitoring turbidity, we can tell how successful pathogen removal is at a SWTP.

Role of coagulation

Pathogens are tiny, they can be very hard to remove.

Very generally, as shown in Figure 1, these barriers include source water protection, coagulation-flocculation, sedimentation, filtration, disinfection, and distribution.

This may make you wonder "If these pathogens are so hard to remove, how can it be done?"

This is a reasonable question.

An EPA pilot scale study to assess *Cryptosporidium* removal through filtration found:

- 3.7 log *Crypto* removal in the filters when coagulation was optimized

  (The Crypto in the filtered water was reduced to 2/10,000^{ths} of the original amount.)

  The filtered water turbidity averaged 0.08 NTU.

- 1.5 log *Crypto* removal during filtration when coagulation was not optimized

  (The Crypto in the filtered water was reduced to 3/100^{ths} of the original amount.)

  The filtered water turbidity averaged 0.31 NTU.

(Dugan, 2001)

Figure 2: Good Coagulation is Key to Effective Sedimentation

A generally accepted rule of thumb for designing drinking water treatment

processes is that an efficient treatment unit should remove 90 to 95% of the particles entering the unit. The same is true of sedimentation processes. However, when coagulant doses and mixing energy are not applied effectively, we can create too little floc to settle particles effectively, or we can create a floc that is so light weight that it will not to settle out while it is still in the settling basins.

Figure 2 provides yet another reason why we would want to make the coagulation, flocculation and sedimentation process as effective as possible. The filters are normally the last treatment unit where particles are physically removed from the water. An EPA study devised to evaluate the effectiveness of filters showed that when they received water from basins where the coagulation process was optimized, the filters removed *Cryptosporidium* 150 times more effectively than when they received water from a coagulation process that was not optimized. Effective coagulation not only improves pathogen removal in the sedimentation basin, but in the filters, as well. And the degree of improvement demonstrated in Dugan's study is huge. When the coagulant dose is optimized, there will, most likely, be less subsequent pH adjustment required to stabilize the finished water pH at an acceptable level. Further, with fewer particles in the filtered water, one may reasonably expect that the oxidant demand of the water would be less, so smaller disinfectant doses may be required. Therefore, efficient coagulation, flocculation, and sedimentation can also make multiple treatment processes more cost effective.

What makes coagulation necessary?

Table 1 shows the relative diameters, total surface areas and settling times required for particles with a specific gravity of 2.65 (representative of gravel). Note that with each 10-fold reduction in diameter, there is a 10-fold increase in the total surface area of the particles. The greater the surface area, the greater the effect of the viscosity of the water on the settling particles. Consequently, there is also an exponentially increasing amount of time it takes for the particles to settle.

Figure 3, shows the relative size of many of the particles found in raw surface water. Typically, these particles have a specific gravity much lower than 2.65 and the settling time would be much longer than the times shown for the particles of similar size in Table 2.

Table 1: Relative Sizes and Characteristics of Particles (with a Specific Gravity of 2.65) in Water

Number of Particles	Weight of All Particles (mg)*	Diameter of Particle (in mm)	For example	Total Surface Area	Time Required to Settle 1 ft
1	1,388	10	Gravel	0.487 in^2	0.3 sec
10	1,388	1	Coarse Sand	4.87 in^2	3 sec
100	1,388	0.1	Fine Sand	48.7 in^2	38 sec
1,000	1,388	0.01	Silt	3.38 ft^2	33 min
10,000	1,388	0.001	Bacteria	33.8 ft^2	55 hrs
100,000	1,388	0.0001	Colloidal Particles	3.8 yd^2	230 days
1,000,000	1,388	0.00001	Colloidal Particles	0.7 acres	6.3 yrs
10,000,000	1,388	0.000001	Colloidal Particles	7.0 acres	63 yrs (min)
* Assumes all the particles are produced from a single spherical particle with a specific gravity of 2.65					

(Source: Faust and Aly, Principles of Water Treatment, Lewis Publishers, 1998, page 219)

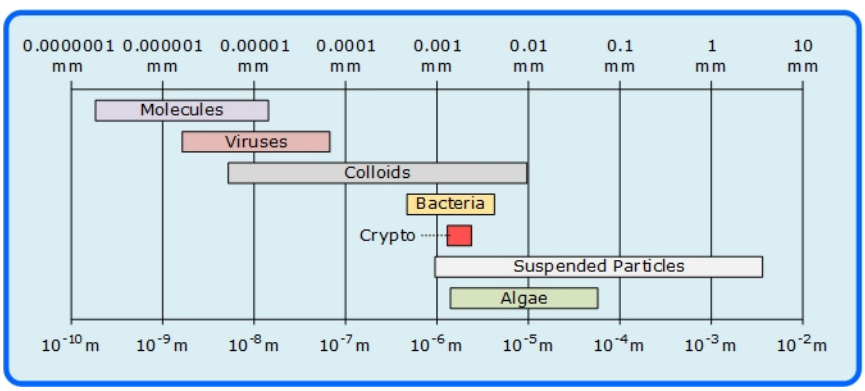

Figure 3: Size Ranges for Particles Found in Untreated Surface Water

The particles in raw water include pathogens, sources of taste and odor, and sources of cloudiness, which most people find unacceptable. However, it is obvious that these particles will not settled out of the raw water in a timely way unless we apply some treatment that will cause the particles to settle more quickly.

From Table 1, we see that the larger particles settle faster than smaller particles of the same density. To remove the undesirable particles shown in Figure 3, we have to apply some kind of treatment that will make them

larger with enough density to make them settle faster. It's obvious that one way to do this would be to make the particles "stickier" so that the increased size of the groups of particles sticking together would help them settle.

What do we have to do to make the particles stickier? Figure 4 shows two particles suspended in water. Solid particles that have been in water a long time normally reach a state of electro-chemical equilibrium. The surface area of these particles, on balance, becomes negatively charged, and the particles become surrounded by a layer of water populated by positively charged ions held in place by the negative charges on the particle surface.

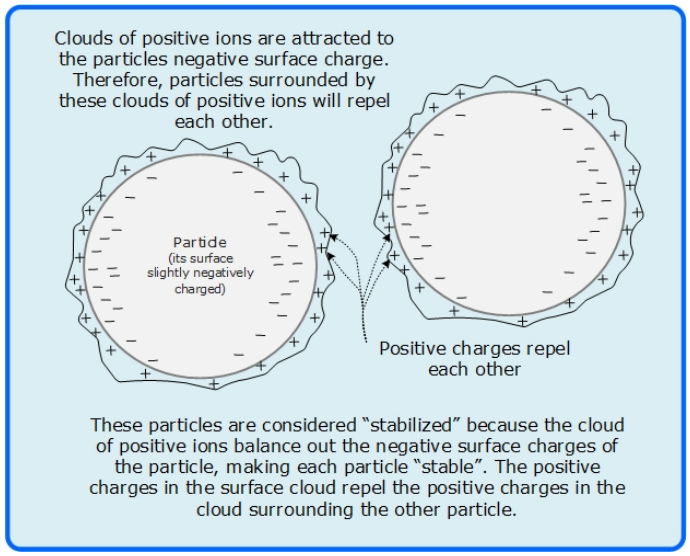

Figure 4: Natural State of Small Particles in Water

Because the layers of positively charged ions repel each other, if we want to cause the particles to bond together so that they will settle faster, we have to do something to reduce the impact of these positive charges. There are many ways to treat the particles to make them attract rather than repel, and there are a lot of scientific terms to describe the nature of the chemical interaction that these treatments employ. The names and descriptions of the processes are not as important as the fact that we understand that something must be done to create larger particles. The most elementary part of the processes we use to cause particles to be attracted to each other and settle out is that we must "destabilize" them so that they will no longer repel each other. Above that, we want to create bridges between the particles to help build even larger, settleable floc.

The most common treatments are with chemicals such as alum, ferric chloride, etc. In the right doses and with the right mixing, these chemicals destabilize suspended particles and create the bridges necessary to settle particles. There are also many polymers that are used as a primary coagulant or coagulant aid. Figure 5 shows some of the ways that polymers interact with particles.[1]

The first interaction, shown in the first panel of Figure 5, is to destabilize the particles.

The second interaction, shown in the second panel, if we use the right dose of polymer, and if we apply the correct amount of energy, creates floc.

If we have used too much polymer, the second interaction will be to restabilize the particles without creating floc, as shown in the third panel.

[1] The polymer interactions are shown simply because they easier to depict than the interactions with metal salts. However, the impact of the interactions are essentially the same.

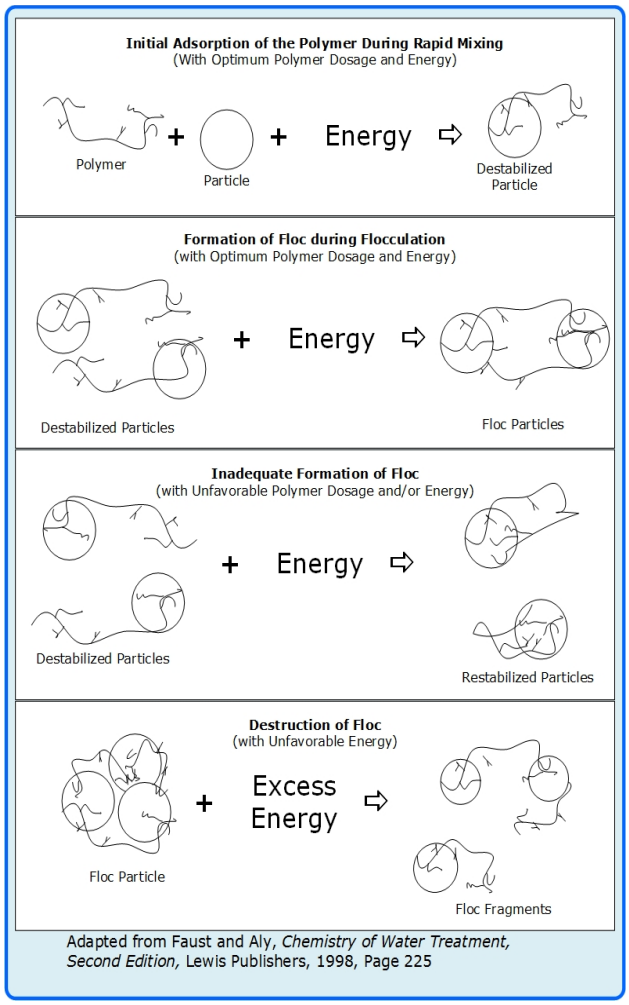

Figure 5: Reactions Between Particles and Polymers

The fourth panel shows that if we create a floc and then apply an excess of energy, any floc formed will then be torn apart.

While the interactions of chemicals like alum and ferric chloride are different than the chemical reactions with polymers, the same principles of ensuring the coagulant doses and mixing energy are applied correctly are essential to forming settleable floc. Three very important question are:

1. How do we determine which coagulant will produce the best most settleable floc?
2. How do we determine the best dose?
3. How do we know how much mixing energy to apply?

The answer to the first question is: 1) we most often determine the best coagulant (or combination of coagulants) by past experience and by experimentation. 2) The second most common way is that, when a coagulant that has been effective in the past stops working, we may want to

try a coagulant with a different charge. For example if we have been using a cationic coagulant and it stops working following an extreme rain event, we may want to try an anionic polymer or non-ionic polymer to restore effective coagulation.

The answer to the second question should be: "by representative jar testing".

The answer to the third question should be: "by representative jar testing".

Factors Influencing Coagulation:

One of the most common complaints we hear about jar testing is that it doesn't help find the most effective coagulant or the most effective coagulant dose. A more accurate description of the issue would be, "*The way that jar testing is most often conducted, the test doesn't help find the most effective coagulant or coagulant dose.*" With a jar test, we are attempting to predict the performance of our flash mixing, flocculation, and sedimentation processes by duplicating the plant performance in a small volume test. In order to devise a successful jar test, we have to control as many of the factors influencing coagulation as we can. The following factors are the key ones that we can account for during jar testing:

- pH: pH is a very important variable. Some coagulants perform well in low pH ranges and others in higher ranges. When using a coagulant chemical that is acidic and the raw water alkalinity is low, alkalinity may have to be added, as well. Our jar test should be conducted at the same pH and alkalinity that we have in the flash mixing units, the flocculation units, and the settling units. Further, if a pH adjustment or alkalinity adjustment chemical takes a long time to reach a complete reaction (for example, lime takes 45 to 60 minutes to fully react), the jar test must take this element of the coagulation process into account.
- Temperature: The colder the water, the slower the chemical reaction with the coagulant. Also, the colder the water, the more viscous it is, and the slower the floc will settle. For this reason, jar test should be conducted with waters that are at about the same temperature as the units in the treatment plant.
- Dosage: The jar tests should be dosed with the same coagulants and coagulant aids in the same range of doses we expect to use in the plant.
- Time: The formation of an initial microscopic floc in rapid mixing is essentially instantaneous if dispersion is complete. During flocculation, a longer time is required to build settleable floc.
- Agitation: In rapid mix, high agitation causes uniform dispersion of coagulant chemicals and provides the energy necessary to make the

coagulant interact with the particles to form microscopic floc. In flocculation, gentle agitation causes the flocs to attach to each other and grow larger. After flocculation, agitation in the process streams should be low enough not to break up flocs.

(L. Holbert, Unit 4: Surface Water, TEEX, page 3-27, 3-28)

Velocity Gradient

Definition of Velocity Gradient:

The velocity gradient (G) describes how much energy is transmitted to the water during mixing. High G means high energy is transferred; low G means lower energy is transferred.

The two largest factors contributing to the "agitation factor" are eddy currents generated as a result of the velocity gradient and non-uniform flow. Without these two elements, there will be inadequate energy to distribute and mix a coagulant. The degree to which these two elements are applied in a flash mixing unit, a flocculation unit, or a jar test is measured by the velocity gradient (G).

Calculation of Mean Velocity Gradient "G" Using Power Input:

$$Velocity\ Gradient\ (G) = \sqrt[2]{\frac{Power\ Input\ (P)}{Viscosity\ (\mu)\ \times Volume\ (V)}}$$

where:

G = Velocity Gradient [1/seconds]

P = Power input [foot-pounds/second]

μ = Viscosity of the water being treated [pound-seconds/square foot]

V = Volume [cubic feet, ft^3]

(Montgomery, J.M., Inc. Water Treatment Principles and Design, Wiley, 1985, page 518)

Calculation of Mean Velocity Gradient "G" Using Head Loss:

The equation is adapted for calculating the velocity gradient when hydraulic mixing is used to disperse and react with the coagulant is as follows:

$$G = \sqrt[2]{\frac{Wt \times H_L}{Viscosity\ (\mu) \times Time\ (T)}}$$

Where:

G = Velocity Gradient [1/seconds]

Wt = Weight of one cubic feet of water [62.4 lbs]

H_L = Head Loss in the pipe or basin [ft]

μ = Viscosity of the raw water [pound-seconds/square foot]

T = Time that the water is in the mixing unit (seconds)

Note that when flow is passing through a mixing unit, such as a pipe or basin, the time, T, can be calculated by:

$$T\ (seconds) = MGD \times 1{,}000{,}000 \frac{gallons}{MG} \times 1{,}440 \frac{minutes}{day} \times 60 \frac{seconds}{minute}$$

Calculation of Mean Velocity Gradient "G" for Air Diffusers:

Air diffusers are a special category of coagulation-flocculation units. The air is typically diffused several feet below the surface of the water, and the coagulant or other chemical is injected below the surface and just above the air diffuser(s). The velocity gradient is calculated as follows:

$$G = \sqrt[2]{\frac{1.04 \times Q_{Air} \times h_{diffuser}}{\mu \times V}}$$

Where:

G = Velocity Gradient [1/seconds]

Q_{Air} = The flow rate of diffused air [cubic feet/minute]

$h_{diffuser}$ = The depth of the air diffuser below the surface of the water [ft]

μ = Viscosity of the raw water [pound-seconds/square foot]

V = Volume [cubic feet, ft^3]

Time Considerations:

The time that a volume of water encounters the power input associated with the velocity gradient, in seconds, is the factor applied to calculate Gt. Basically:

$$Gt = G \times t$$

Where:

G = Velocity Gradient [1/seconds], and

t = Time in seconds

Table 2: Typical Detention Times, Velocity Gradients and Gt Factors for Rapid Mix Units

Hydraulic Detention Time (seconds)	Velocity Gradient (G) (1/s)	Gt Range
~ 0.5	4,000	~ 2,000
10 to 20	1,500	15,000 to 30,000
20 to 30	950	19,000 to 28,500
30 to 40	850	25,500 to 34,000
40 to 130	750	30,000 to 97,500

Notice that if the velocity gradient is reduced by one half, the time may be doubled to get the same Gt factor. Essentially, this means that if we can't apply just as much velocity gradient in our jar test apparatus as we have calculated in the flash mix unit, we can increase the time factor in our jar test to more closely approximate what is happening in the flash mixing unit. The following table shows some typical residence times, velocity gradients, and Gt ranges found in flash mixing at drinking water plants. Table 3 contains typical mixing unit detention times, velocity gradients, and Gt ranges for rapid mix units. The velocity gradient is fairly large for rapid mix units compared to other mixers, because the residence time for these units is fairly short. Notice that the Gt for a G of 1,500/sec for 20 seconds is the same for a G of 750/sec for 40 seconds.

For Flocculation units the total residence times are from 15 to 30 minutes and the G is from 20/seconds to 75/seconds. The total Gt for flocculation typically ranges from 10,000 to 100,000.

Temperature and Viscosity:

One important consideration when calculating the G factor is the viscosity of the water. Note that viscosity is in both of the hydraulic gradient calculation equations, above.

Table 3: Water Temperature and Viscosity

Temperature, °C	Temperature, °F	Viscosity, μ [lb-sec/ft^2]
0	32	3.75×10^{-5}
5	41	3.17×10^{-5}
10	50	2.74×10^{-5}
15	59	2.39×10^{-5}
20	68	2.10×10^{-5}
25	77	1.87×10^{-5}
30	86	1.67×10^{-5}

Table 4 shows the viscosity of water at temperatures from 0 oC to 30 oC. Note that the viscosity of the water is almost 2 times greater at 5 oC than at 30 oC. In other words, the G for cold water will be significantly less than the G for warmer waters, due to the change in viscosity. Operators and design engineers use the viscosity of water at 20 oC as a baseline for water viscosity and adjust the hydraulic detention times in their mixing units to account for the differences in temperature and viscosity.

Table 4: Detention Time Factors

Temperature (°C)	Detention Time Factor (%)
0	135
5	125
10	115
15	107
20	100
25	95
30	90

(AWWA, Water Treatment Plant Design, 2nd ed., McGraw-Hill, 1969, page 82)

Table 5 shows the factors applied from 0 °C to 30 °C. In Table 4, the factor for 20 °C is 100%, and the detention times for colder waters are increased, and the detention times for warmer waters are decreased.

Types of Mixers:

The three main categories of mixers, as shown in Figure 6, are hydraulic mixers, mechanical mixers, and pneumatic mixers. Several examples of hydraulic mixers and mechanical mixers are listed in the figure, but the only pneumatic mixer we will discuss is the air diffuser.

There are many types of mixers and there are mixers and there are good reasons to select a particular type or design based on the needs of the plant and the characteristics of the raw water. For example, if there are

Mixers

Hydraulic Mixing Devices	Mechanical Mixing Devices	Pneumatic Mixers
Examples:	***Examples:***	***Example:***
Venturi Sections	Propeller Mixers	Air Diffusers
Hydraulic Jumps	Turbine Mixers	
Parshall Flumes	Paddle Mixers	
Weirs	In-line Propeller Mixers	
Baffled Mixing Chambers		
In-line Static Mixers		
Turbulent Piping		

Figure 6: Types of Mixing Devices

taste or odor problems that may be reduced or eliminated by aeration, it may make sense to use air diffusers for mixing, as well. If the plant production rate is fairly constant, it may make sense to use a hydraulic mixing device, since relatively high and/or low flows won't interfere with the mixing energy. If the flows are constantly changing through a wide range, mechanical mixers may be the best choice. However, calculating the Gt and setting up a representative jar test will vary from one type of mixer to the next.

Hydraulic Mixers

Recall that the equation for calculating the velocity gradient in our previous discussions is:

$$G = \sqrt[2]{\frac{Wt \times H_L}{Viscosity\ (\mu) \times Time\ (T)}}$$

Where:

G	=	Velocity Gradient [1/seconds]
Wt	=	Weight of one cubic feet of water [62.4 lbs]
H_L	=	Head Loss in the pipe or basin [ft]
μ	=	Viscosity of the raw water [pound-seconds/square foot]
T	=	Time that the water is in the mixing unit (seconds)

To give you a feel for how much "G" one foot of head will give you in 10 seconds, at 20 °C, the following calculation is provided:

$$G = \sqrt[2]{\frac{62.4\frac{lbs}{ft^3} \times 1\,ft}{2.10 \times 10^{-5}\ \frac{lb-sec}{ft^2} \times 10\,seconds)}}$$

$$G = 545/sec$$

In this discussion we will not be actually calculating the head losses contributing to the turbulence in hydraulic mixers. We will only discuss where the turbulence comes from. You will be provided with spreadsheets to calculate the G and t factors for setting up your representative jar tests.

Figures 7 through 12 show examples of hydraulic mixing. In these figures, the energy applied for mixing is related to the turbulence imparted to the water due to flow through channels or falling from one elevation to another.

The degree of turbulence is measured by head loss.

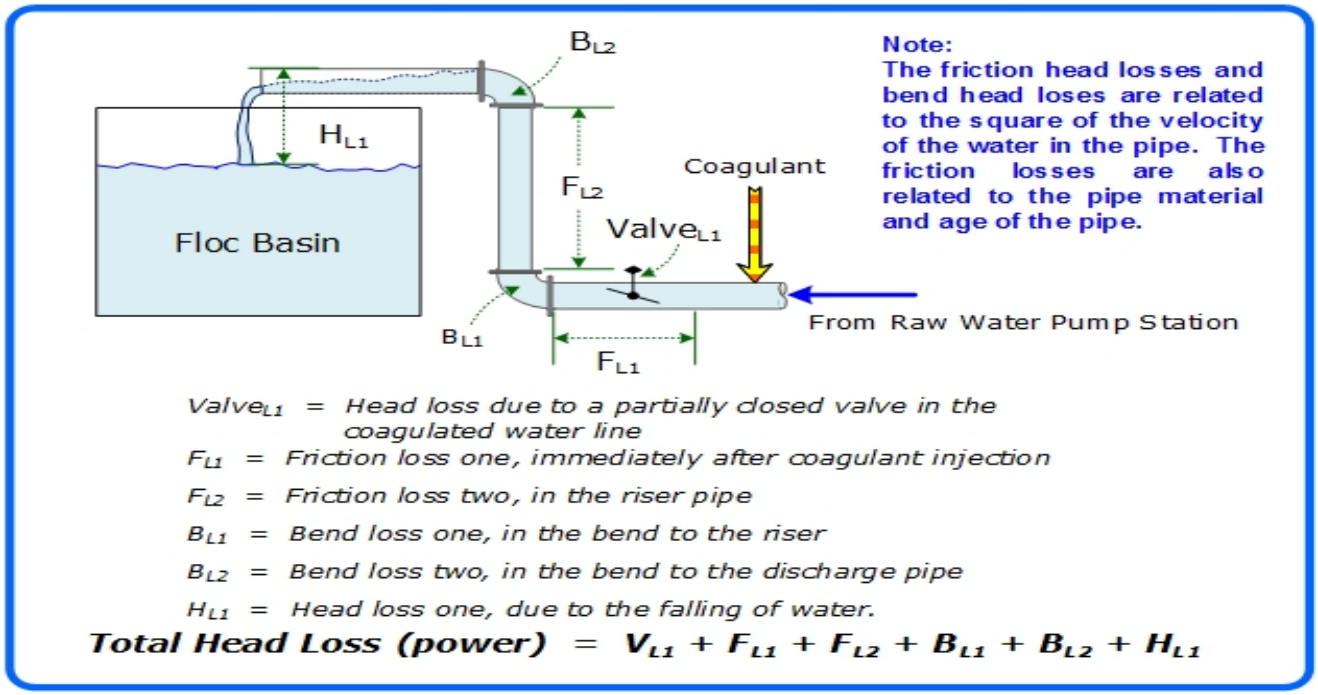

Figure 7: Head Losses in Pipe Flow Hydraulic Mixing

Figure 7 shows typical head losses in a piping system. Most of these are friction losses, bend losses due to change in direction, changes in size of the pipe, sharp openings`, or a drop in elevation from a pipe into a basin. If the run of pipe is not long enough to ensure adequate mixing, a valve can be inserted in the line and maintained in a partially closed status to create turbulence. Some sources say that the head loss due to the partially closed valve should not be more than 4 ft of water. Note that in Figure 7 there is no friction loss associated with the horizontal discharge pipe. This is because of the nature of the flow changes when a pipe is not flowing full. Even though this friction loss could be accounted for, it is normally very small. This type of mixing unit is most often used for flash mixing and not for flocculation.

An important factor shown in Figure 7, is that the friction and bend losses are related to the square of the velocity of the water in the pipe, and the friction losses are also related to the condition of the pipe (the material it is made of and the age of the pipe).

Figure 8 shows a drawing of two types of baffled basin mixers. One is called horizontal baffling and one is called vertical baffling.

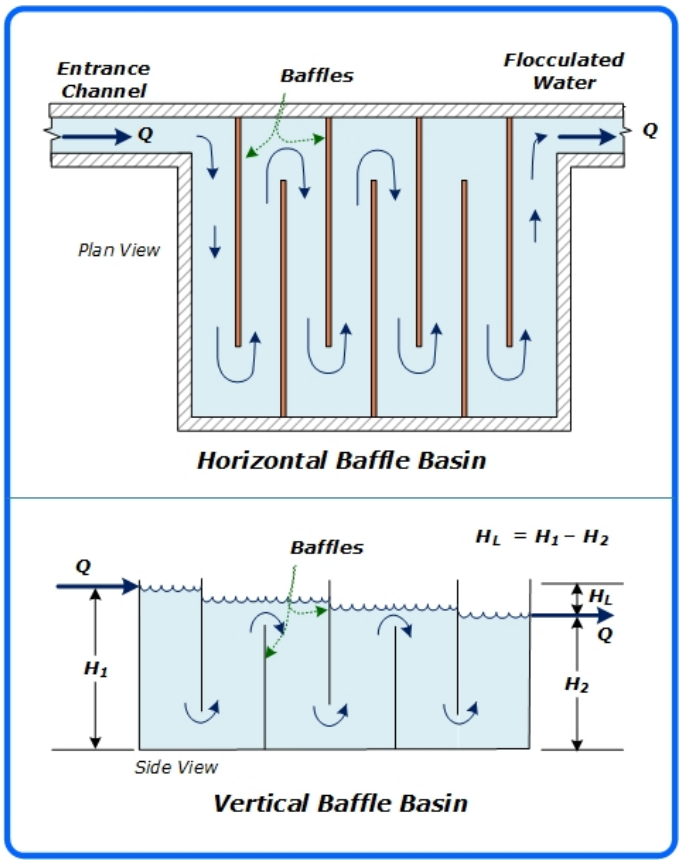

Figure 8: Head Loss in a Baffled Basin

Both types of baffled basins cause turbulence (and head loss) due to friction and changing direction of the water flow. If the bottom of these basins are level, the head loss can be directly measured as the difference in the surface level of the water. If the bottom slants downward as the water flows across the basin, the velocity of the water will increases due to gravity, and the increased velocity will have to be taken into account when calculating the head loss due to turbulence. This type of unit is most often used for flocculation, and only rarely for flash mixing.

Figure 9 shows the cross section of a Venturi section used as a mixer.

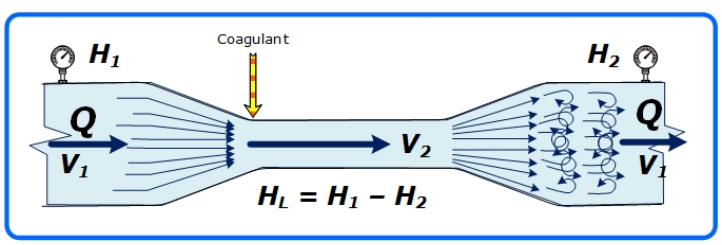

Figure 9: Venturi Section Mixer

The rate of flow through each part of the Venturi section is always the same, but because the diameter of the pipe is greatly reduced in the middle part, the velocity is greatly increased. Following the narrow section, the pipe diameter is increased again. This results in a lot of turbulence. The head loss can be measured by subtracting the downstream head from the upstream head. The Venturi section mixer is seldom used for anything except flash mixing.

Figure 10 shows the hydraulic jump phenomenon being used to provide mixing energy. A hydraulic jump is created when a narrowing flow stream passes through a narrowing channel followed by a drop in the bottom of the channel.

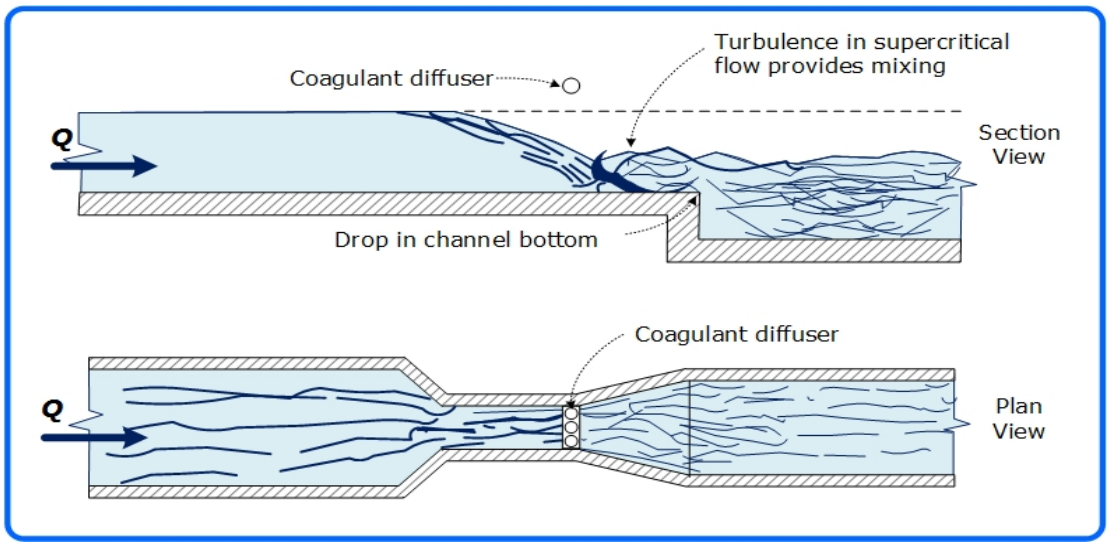

Figure 10: Hydraulic Jump Mixer

The example shown in Figure 10 shows a jump intended to provide a modest amount of energy for mixing, and does not represent one of the more extreme examples of hydraulic jump.

Figure 11 shows flow over a weir being used to provide mixing energy.

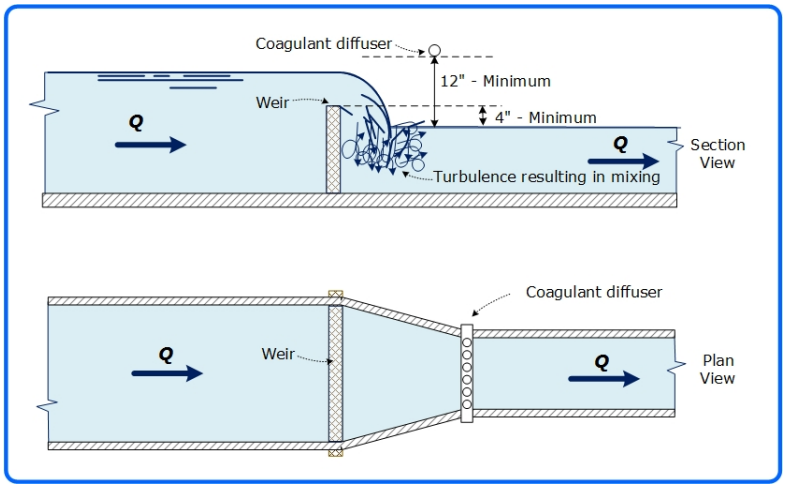

Figure 11: Weir Mixer

The figure also shows some of the guidelines found in the literature: 1) the fall over the weir must be at least 4 inches, and 2) the coagulant diffuser must be at least 12 inches above the receiving water to ensure that it drops with enough velocity to enter the water downstream from the weir. This type of unit is used for flash mixing.

Figure 12 shows an in-line static mixer.

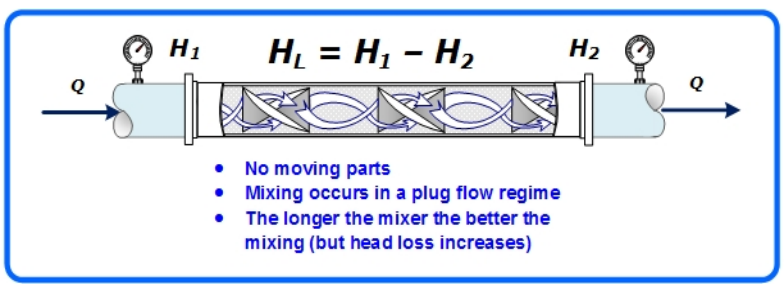

Figure 12: In-line Static Mixer

The effectiveness of this type mixer is highly dependent on the flow rate through the mixer. The hydraulic detention time for these units is typically less than one second. As with the Venturi section mixer, the head loss creating turbulence in the in-line static mixer could be measured by subtracting the downstream head from the upstream head. This type of unit is used exclusively for flash mixing.

Mechanical Mixers

Recall that for mechanical mixers, the velocity gradient is calculated as follows:

$$G = \sqrt[2]{\frac{P}{\mu \times V}}$$

When using propellers and paddles in mechanical mixing, the power portion of the equation takes a complicated twist. The equation becomes:

$$G = \sqrt[2]{\frac{Np \times \left(\frac{Wt}{g}\right) \times D^5 \times \left(\frac{R}{60}\right)^3}{(\mu \times V)}}$$

Where:

G	=	Velocity Gradient [1/seconds]
Np	=	Propeller number [unitless]
Wt	=	Weight of one cubic feet of water [62.4 lbs]
g	=	Acceleration due to gravity [32.2 ft/sec^2]
D	=	Diameter of the blade [ft]
R	=	Number of rotations per minute
μ	=	Viscosity of the raw water [pound-seconds/square foot]
V	=	Volume of water in the mixing basin [ft^3]

As mentioned before, we will not be manually calculating these velocity gradients for mechanical mixing. We will only discussing how the factors come into play and where to find them.

Figure 13 shows several examples of propeller type mixers and Table 6 contains the impellor power number for calculating the G factors, as above.

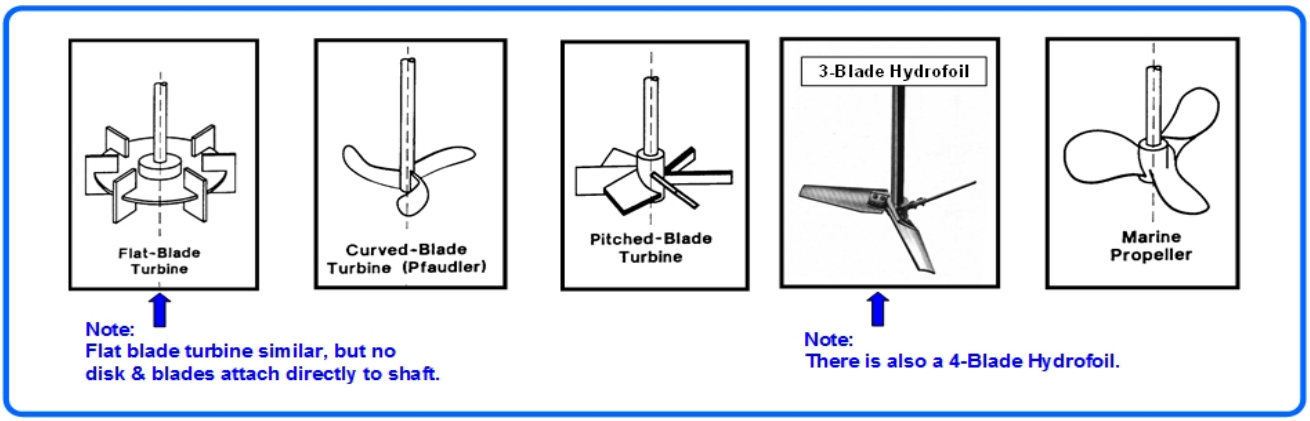

Figure 13: Mechanical Mixers

Once you have the power number, the diameter of the impeller, and the number of revolutions per minute, the rest of the variables in the equation are factors with which we are familiar. These mechanical mixers may be used for flash mixing or flocculation.

Table 5: Impeller Power Number (Np)

Propeller Type	Np
Flat Blade Turbine (radial flow)	2.6 - 3.6
Disk Turbine (radial flow)	5.1 - 6.2
Curved Blade Turbine (radial flow)	2.5
45° Pitched Blade Turbine (axial flow)	1.36 - 1.94
3-Blade Hydrofoil	0.3
4-Blade Hydrofoil	0.4
Propeller (axial flow)	0.3 - 0.7

Mixing in Coagulation and Flocculation, AWWARF 1991 & Water Works Engineering, Qasim & Zhu, Prentice Hall, PTR, 2000

Note: *When selecting a power number to calculate the velocity gradient, you will need to have specific information about the impeller you are using. If this information is not available, use the mean.*

A special application of the mechanical mixer is the in-line mechanical mixer, as shown in Figure 14. This unit is similar to the static mixer, but it has a motor driving a shaft with two impellers on it. Obviously, the mixing energy is not related to the difference in head before and after the mixer. The in-line mechanical mixer is used for flash mixing but not for flocculation.

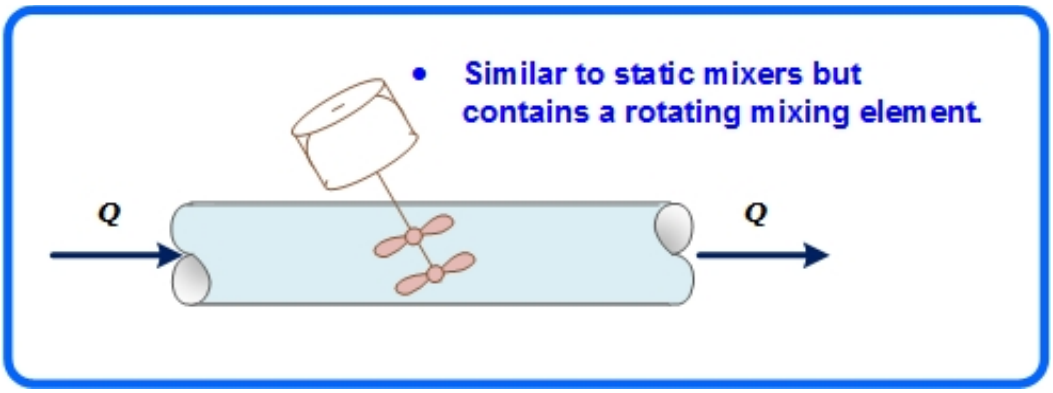

Figure 14: In-line Mechanical Mixer

Horizontal paddles are often used for flocculation. Figure 15 shows an example of a section of a flocculation channel with the horizontal paddles in place. The energy imparted by the horizontal paddles is related to a coefficient of drag, the area of each paddle, its distance from the rotating shaft, and the speed of rotation for the paddle assembly. The factors of viscosity, volume, etc., continue to apply.

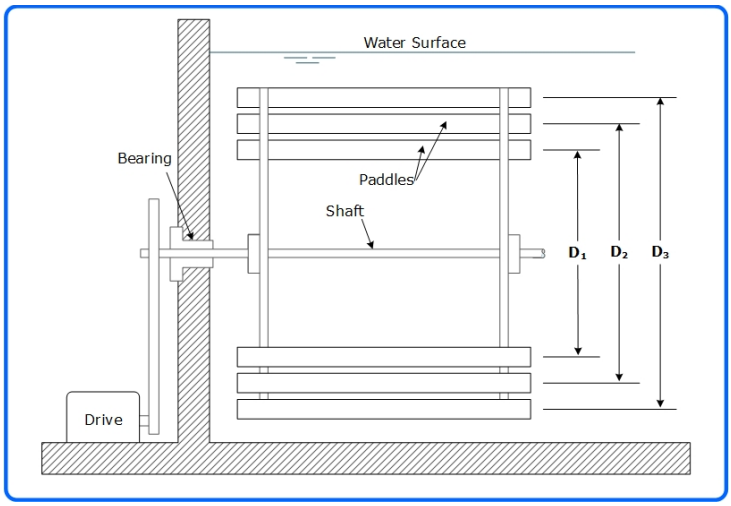

Figure 15: Horizontal Paddle Flocculator

The typical flocculation process has at least two phases of tapered flocculation. The first stage has higher energy, the second, less energy, and if there is a third stage, it applies even less energy (see Table 7). The process is tapered so that floc formed in an earlier stage will not be torn apart as it grows bigger. The floc-filled water passes from stage to stage, the energy is tapered off, and the floc particles continue to grow. Table 8 shows some of the general design characteristics for flocculation basins commonly found in Texas.

Table 6: Typical Velocity Gradients in Tapered Mixing

Stage	Velocity Gradient Range (G)
1st stage	70 - 40
2nd stage	50 - 20
3rd stage	30 - 10
(Source: A. Amirtharajah, et al., ed., Mixing in Coagulation and Flocculation, AWWA Research Foundation, 1991, page 416)	

Table 7: General Design Criteria for Flocculation Basins [a]

		Water Purification		Lime (and Soda Ash) Softening	
		River Water	**Reservoir Water**	**River Water**	**Ground Water**
Minimum mixing time, minutes	Conventional treatment	20	30	30	30
	Direct Filtration	15	15	-	-
Range of energy input, (G), sec^{-1}	Conventional treatment	10 - 50	10 - 75	10 - 50	10 - 50
	Direct Filtration	20 - 75	20 - 100	-	-
Minimum number of stages	Conventional treatment	2 - 3	3	3	3
	Direct Filtration	2	2	-	-

(a) (1) Tapered mixing is recommended. The range of energy input shown is typical of the range of energy input across the basin in a tapered energy flocculator.

(2) For direct filtration, raw water should be low turbidity (less than 10 NTU) most of the year.

(3) The range of energy inputs shown are based on alum flocculation or alum addition with polymer as a coagulant aid. If ferric salts are chosen as a coagulant, the maximum G value should not exceed

50 sec^{-1}. If a cationic polymer is used as a coagulant, the required energy input may be 50% higher than that shown above.

(4) Tapered mixing and effective compartmentalization between stages are essential

(5) Frequently there is a scale-up problem between pilot-scale flocculators and full-scale flocculators if G and Gt are used as the design criteria. Most pilot studies tend to give a significantly high G or Gt value as an optimum condition.

(6) The design criteria shown are applicable to most types of flocculation units

(Source: Montgomery, J.M., Inc., Water Treatment Principles and Design, 1985, page 514)

Sedimentation Basins

The design of sedimentation basins is normally based on Hydraulic Detention Time (HDT) or Surface Overflow Rate (SOR). In jar testing, the SOR is the most convenient term to work with.

Definition of Surface Overflow Rate:

The surface overflow rate is a useful parameter in designing or analyzing the design of a clarifier. It is the flow rate divided by the surface area of the clarifier:

(Montgomery, J.M., Inc. Water Treatment Principles and Design, Wiley, 1985, page 138)

$$SOR = \frac{Q}{SA}$$

where

SOR = Surface overflow rate [gpm/ft^2]

Q = Flow rate [gpm]

SA = Surface area of the clarifier [ft^2][2]

Tables 9 and 10 show the configuration and surface overflow rates of some common sedimentation basins. These SORs will be important in setting up your jar tests.

[2] When calculating the surface area for the sedimentation basin or a clarifier, only the surface area actually used for sedimentation are included. The surface areas for rapid mix, flocculation, and/or solids contact are not included in the surface area calculation.

Table 8: Configuration for Common Sedimentation Basins

Basin Configuration	Basin Depth	Surface Overflow Rate
Sedimentation (Cross flow or radial flow)	>14 ft	0.7 gpm/ft^2
	12 - 14 ft	0.6 gpm/ft^2
	10 - 12 ft	0.5 - 0.6 gpm/ft^2
	< 10 ft	0.1 - 0.5 gpm/ft^2
Vertical (>45°) Tubes	>14 ft	2.0 gpm/ft^2
	12 - 14 ft	1.5 gpm/ft^2
	10 - 12 ft	1.0 - 1.5 gpm/ft^2
	< 10 ft	0.2 - 1.0 gpm/ft^2
Horizontal (<45°) Tubes		2.0 gpm/ft^2
Lamella Plates		4.0 gpm/ft^2
Superpulsator		1.5 gpm/ft^2
Claricone		1.0 gpm/ft^2
Adsorption Clarifier (Trident7)		9.0 gpm/ft^2

(Source: Partnership For Safe Water Self-Assessment Document, Attachment 2, AWWA, November 14, 1995)

Table 9: EPA Criteria for Process Evaluation: Sedimentation

Sedimentation Type	Turbidity Mode		Softening Mode		Depth	
	gpm/ft^2	m^3/m^2/d	gpm/ft^2	m^3/m^2/d	feet	meters
Conventional Rectangular	0.5 - 0.7	29 - 41	0.5 - 1.0	29 - 59	12 - 16	3.6 - 4.9
Upflow Units	0.5 - 0.7	29 - 41	0.5 - 1.0	29 - 59		
Tube Settlers	1.0 - 2.0	59 -117	1.5 - 2.5	88 - 147		
Lamella Plates	<4.0	<235	<4.0	<235		

(Source: USEPA, Optimizing Water Treatment Plant Performance Using The Composite Correction Program, USEPA, 1991, page 8)

Relation of SOR to Settling Rate:

For simple upflow clarifiers, the vertical-flow rise rate must be less than the respective floc settling rate at any selected level. Typical settling velocities of flocs of different sizes and densities are shown in Table 11.

Table 10: Settling Velocity of Selected Flocs

Floc Type	Settling Velocity at 15EC		Corresponding Surface Overflow Rate (gpm/ft^2)
	(mm/min)	(ft/min)	
Small fragile alum floc	37 - 73	0.12 - 0.24	0.90 - 1.8
Medium-size alum floc	55 - 85	0.18 - 0.28	1.3 - 2.1
Large alum floc	67 - 92	0.22 - 0.30	1.6 - 2.2
Heavy lime floc (lime softening)	76 - 107	0.25 - 0.35	1.9 - 2.6

(Source: Montgomery, J.M., Inc. Water Treatment Principles and Design, Wiley, 1985, page 520)

Definition of Hydraulic Detention Time (HDT):

The HDT in a sedimentation basin (or clarifier) is the volume of the basin divided by the flow rate through the basin.

$$HDT = \frac{V}{Q \times 60}$$

where

HDT = Hydraulic Detention Time [hours]

Q = Flow rate [gpm]

V = Volume of the basin [gal]

Table 12 shows the recommended detention times for different types of sedimentation basins. (In Texas, these recommendations are incorporated as regulations.)

Table 11: Recommended Sedimentation/Clarification

Conventional Coagulation	Detention Time
Sedimentation (Cross flow, radial flow, upflow)	360 minutes
Clarification (Solids Contact clarifiers)	120 minutes
Tube Settlers	120 minutes

(Source: AWWA, Partnership For Safe Water Self-Assessment Document, Attachment 2, AWWA, 1995)

Bottom Line:

A successful jar testing procedure must successfully incorporate all the mixing factors for flash mixing and flocculation and settling in order to be an effective predictor of the performance of the plant.

Historically, operators attend a surface water class or a laboratory class where a jar test is demonstrated and they come away with the idea that the way they were shown is exactly how it is always done. This is not, in fact, the way this training should be interpreted. Classroom demonstrations are fine, excepting that they are rarely adapted to a plant where water is being treated. In other words, they are not representative of what is going on in your particular plant.

In the preceding pages, we discussed 16 different mixing devices, and this does not include all the mixing units commonly found in Texas. We also discussed elements of floc formation and settling. Representative jar testing means that the jar test procedure will imitate the coagulation, flocculation, and settling conducted in the water plant. There is no single jar test procedure will duplicate all of these processes for all plants, however, experience shows that jar test procedures can be individually tailored to accurately predict performance for almost every plant.

Square versus Round Jars:

A common misconception is that if you have round flocculation and settling units, you should use round jars. This is not the case. The operator should use jars that provide the best opportunity to predict the performance of the plant.

Figure 16 shows a comparison of the higher speed mixing eddies in a round jar and a square jar.

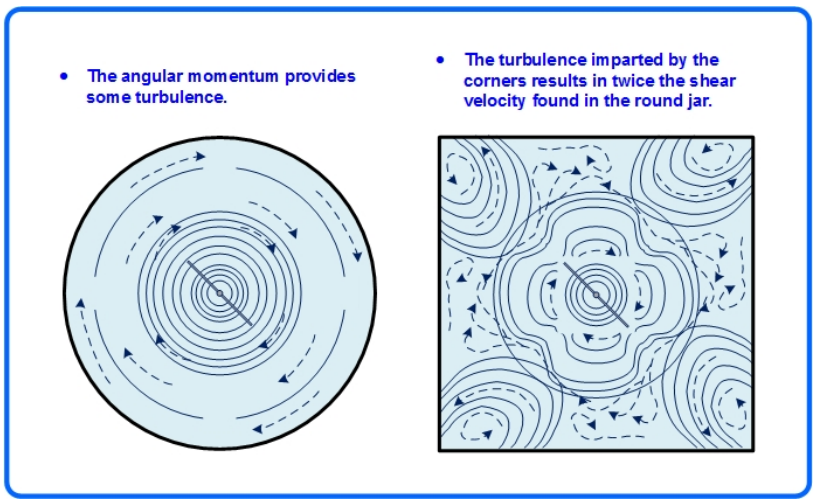

Figure 16: Comparison of Turbulence in Round and Square Jars

The figure shows that once the paddle reaches top speed, the water essentially turns in a circle. The initial velocity gradient can be substantial, but as the velocity increases, each stream of water in the jar continues to flow next to the stream it was adjacent to in the previous rotation. However, as shown on the right hand side of the figure, the corners of a square jar induce eddies with longer paths than those in a round jar. The viscosity of the fluid and the presence of the areas within the jar that are less subject to

the turning of the mixer result in the breaking up of individual streams, forming of new streams, and much more turbulence. In fact, the shear velocity in the square jar is approximately twice as much as in the round jar.

Another feature of the square jar is shown in Figure 17.

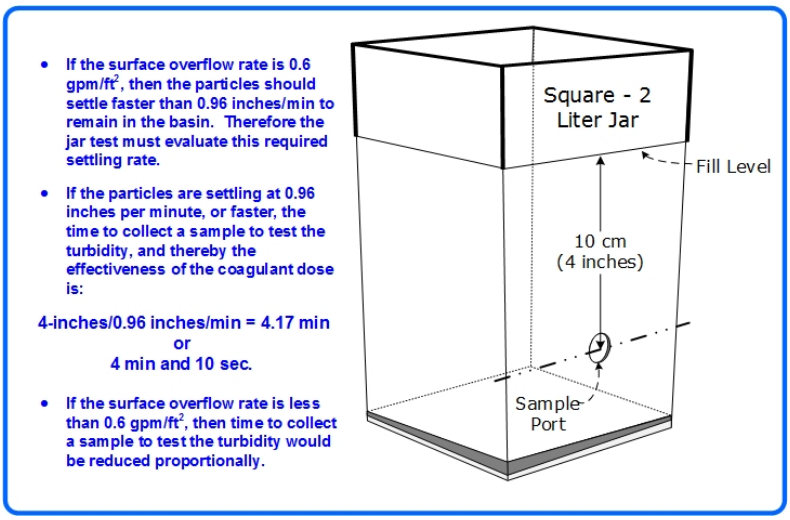

Figure 17: Square 2-Liter Jars

These jars typically have a sample port precisely 4 inches below the fill line. (The figure does not show the rubber stopper and sample tube.) When particles settle in a sedimentation basin, they must settle faster than the water rises, and the surface overflow rate (SOR) is the measure of that rise rate. If a conventional basin is being operate at maximum capacity, or at a SOR of 0.6 gpm/ft^2, the rise rate in the sedimentation basin is about 0.96 inches per minute, and the particles must settle faster than that. An indication of whether or not the particles are settling faster than the rise rate of the water is to check the turbidity after the particles have had a chance to settle the four inches between the square beaker fill line and the sample port. This would be after a settling time of about four minutes (or, 4 minutes and 10 seconds to be more precise). Typically, round beakers do not have sample ports and obtaining a representative sample at a specific distance beneath the water surface is tricky, at best.

Take Home Point: It is easier to mimic the performance of a plant using the standard 2-liter square beakers than round beakers.

Table of Conversion Factors:

Table 13 contains several conversion factors commonly used in drinking water treatment.

Table 12: Conversion Factors

Conversions		Procedure		
From	To	Multiply	By	To Obtain
Doses				
grains per gallon (gpg)	milligrams per liter (mg/L)	gpg	17.1	mg/L
milligrams per liter (mg/L)	parts per million (ppm)	mg/L	1	ppm
parts per million (ppm)	milligrams per liter (mg/L)	ppm	1	mg/L

Table 13: Conversion Factors (Continued)				
Conversions		Procedure		
From	To	Multiply	By	To Obtain
Volumes				
barrels (bbl), water	gallons (gal)	bbl	55	gal
cubic feet (ft3)	cubic meters (m3)	ft3	0.028317	m3
cubic inches (in.3)	cubic millimeters (mm3)	in.3	16,390	mm3
cubic inches (in.3)	liters (L)	in.3	0.01639	L
cubic meters (m3)	cubic feet (ft3)	m3	35.31	ft3
cubic yards (yd3)	cubic meters (m3)	yd3	0.7646	m3
gallons (gal)	cubic meters (m3)	gal	0.003785	m3
gallons (gal)	liters (L)	gal	3.785	L
gallons (gal)	milliliters (ml)	gal	3,785	ml
gallons (gal)	cubic feet (ft3)	gal	0.1337	ft3
liters (L)	cubic meters (m3)	L	0.001	m3
milliliters (ml)	gallons (gal)	ml	0.0002642	gal
ounce, US fluid (oz)	cubic meters (m3)	oz	0.00002957	m3

Table 13: Conversion Factors (Continued)				
Conversions		Procedure		
From	To	Multiply	By	To Obtain
Weights				
grains (gr)	grams (g)	gr	0.0648	g
grains (gr)	kilograms (kg)	gr	6.480 × 10−5	kg
metric tons (t)	kilograms (kg)	t	1,000	kg
pounds (lbs)	kilograms (kg)	lbs	0.45359	kg
pounds (lbs)	milligrams (mg)	lbs	453,592	mg
tons	kilograms (kg)	tons	907	kg
tons	pounds (lb)	tons	2,000	lb

Table 13: Conversion Factors (Continued)				
Conversions		Procedure		
From	To	Multiply	By	To Obtain
Flow Rates and Feed Rates				
cubic feet/minute (ft3/min)	cubic meters per minute (m^3/min)	ft^3/min	0.02832	m^3/min
cubic feet/minute (ft^3/min)	cubic meters per second (m^3/s)	ft^3/min	0.0004719	m^3/s
cubic feet/second (ft^3/s, cfs)	cubic meters per second (m^3/s)	ft^3/s	0.02832	m^3/s
gallons per day (gpd)	cubic meters per day (m^3/d)	gpd	0.003785	m3/d
gallons per day (gpd)	liters per day (L/d)	gpd	3.785	L/d
gallons per hour (gph)	liters per second (L/s)	gph	0.001052	L/s
gallons per minute (gpm)	liters per second (L/s)	gph	1.75333×10^{-05}	L/s
gallons per minute (gpm)	cubic meters per second (m^3/s)	gpm	0.0000631	m^3/s
gallons of water per minute (gpm)	pounds of water per minute (lbs/min)	gpm	8.34	lbs/min

Table 13: Conversion Factors (Continued)				
Conversions		Procedure		
From	To	Multiply	By	To Obtain
Flow Rates and Feed Rates				
gallons per minute (gpm)	millions of gallons per day (MGD)	gpm	0.000694	MGD
milliliters per minute (ml/min)	gallons per minute (gpm)	ml/min	0.0002642	gpm
milliliters per minute (ml/min)	gallons per hour (gph)	ml/min	0.01585	gph
milliliters per minute (ml/min)	gallons per day (gpd)	ml/min	0.38041	gpd
millions of gallons per day (MGD)	gallons per minute (gpm)	MGD	1440	gpm
pounds per day (ppd, or lbs/day)	kilograms per day (kpd)	ppd	2.2046	kpd
pounds per day (ppd, or lbs/day)	milligrams per minute (mg/min)	ppd	1531	mg/min
millions of gallons per day (MGD)	gallons per minute (gpm)	MGD	1440	gpm

Attachment 1 to the Student Guide

Chemical Feed Rate and Dosage Calculations Form

Directed Assistance Module 2-B

Establishing Appropriate Chemical Feed Rates

Using Representative Jar Testing

Chemical Feed Rate Measurement and Dosage Calculations

Chemical Feed Rate Measurements and Dosage Calculations

Raw water flow rate at the time the following information was collected: _____ gpm / MGD (circle applicable units)

Appl. Point No.(1)	Chemical (1)	Feed Rate Verification Freq. (1, 2)	Dosage Calculation Method (1, 3)	Reported		Actual	
				Feed Rate (4)	Dosage (5)	Feed Rate (4)	Dosage (5)
1							
2							
3							
4							
5							
6							
7							
8							
9							
10							

NOTES:

(1) For each of the chemical application points shown on the Simplified Plant Schematic.

(2) Is the chemical feed rate verified after each feed rate change, once each shift, once each day, weekly, seldom, never, etc.

(3) *What method does the plant staff use to calculate each of the chemical doses; the volumetric method (i.e., gal per MG), the liquid weight method (i.e., lbs of liquid per MG), or the dry weight equivalent method (i.e., lbs of an equivalent amount of dry chemical per MG)?*

(4) *Enter the reported and actual (measured) feed rates of the chemical. Use whatever method the staff actually uses to measure the chemical feed rates, (i.e. ml per minute, lbs per minute, etc.). Enter the data for each coagulant and coagulant aid used and for at least one of each form of chemical (solid, liquid, and gas) used.*

(5) *Enter the reported and actual (measured) chemical dose for each of the chemicals that should be applied during a jar test. Report the dosage in the same units that the plant staff uses (i.e., gal/MG, lbs of liquid/MG, etc. Chemical Feed Rate Measurement and Dosage Calculations (continued)*

Chemical Feed Rate Measurement and Dosage Calculations *(continued)*

II. Chemical Feeder Calibration Data [1, 2]

Chemical Feeder:_____ Chemical Feeder:_____

% Stroke Setting	% Speed Setting	Chemical Feed Rate	% Stroke Setting	% Speed Setting	Chemical Feed Rate

Notes:

(1) When collecting data on feeders that have both an adjustable stroke and speed, adjust only one of the two settings at a time. For example, if the operators tend to make feed rate adjustments by changing the speed setting, leave the stroke at a fixed setting and adjust the speed. Make feed rate measurements at least three (preferably four or more) settings for whichever parameter the plant staff tends to change when adjusting feed rates.

(2) The two tables may be used to prepare multiple calibration curves on a single feeder that has both stroke and speed adjustments or for preparing calibration curves for multiple feeders. The second table is provided just in case there is time to prepare a second calibration curve. Use the test data and the following graph to prepare an actual calibration curve for one of the feeders.

Attachment 2 to the Student Guide
Chemical Dosage Calculation

Directed Assistance Module 2-B

Establishing Appropriate Chemical Feed Rates

Using Representative Jar Testing

Chemical Dosage Calculations[3]

When you feed dry chemicals (and pure gases like chlorine), you calculate the dose by simply dividing the chemical feed rate by the water flow rate and then multiply by 1,000,000 to convert to parts per million. While this seems easy, you must remember to convert the feed rate of the chemical and the flow rate of the water into the same units of measurements. For example, if you are feeding 10 pounds per day of chemical, you must also convert the flow rate to pounds of water per day when you calculate the chemical dose.

While all operators use the same calculation when determining the dosage of dry chemicals and pure gases, they can calculate the chemical dosages for liquid chemicals in three ways; volumetric, liquid weight, or dry weight. Although any of these methods can be used to accurately control liquid chemical feed rates, there are pros and cons to each of these alternatives. You must understand the benefits and limitations of each before deciding which is best suited for each of the liquid chemical(s) used at your plant.

Example: Question 1:

To determine what method your plant is using to calculate the dosage of its liquid chemicals, we will work through the following question.

This example might be an unrealistic dose for your plant and your alum might not come to you this way; but we used these numbers to make it easy to calculate and not because anyone was ever observed operating this way.

<u>Problem statement:</u>

Assume your plant was feeding 0.1 gpm of liquid coagulant into 1,000 gpm of raw water. Also, assume that the liquid coagulant has a specific gravity of 1.34 (that means it weighs 1.34 times as much as water, or 11.2 lbs/gal) and contains 50% dry alum. *How would you calculate the coagulant dose that was being applied?*

The answers are shown in the following Table.

At the end of this handout, you will find pages that provide more information on:
how to calculate the current chemical dose,
how to determine what the feed rate should be if you know the desired dose, and
how to prepare a stock solution
for dry chemicals and for all three methods for doing calculations for liquid chemicals.

---

[3] The section on dosing calculations is included here because it may be necessary to refresh the operators' memory of these calculations in order to move forward with the jar testing procedures. If unnecessary, these first four pages may be skipped.

Chemical Dosage Calculations (continued)

As noted previously, there are three methods to calculate the chemical dose for liquid chemicals. These three methods, and the pros and cons of using each, are summarized in the following table. If you will look at the equations shown on the "Basic Approach" row, you will probably realize that (as you move from left to right) each equation adds one piece of information to the one that was before it. The last line on the table, shows the answer to Question 1 when each method is used.

Summary of Methods for Calculating the Dose of Liquid Chemicals

	Method		
	Calculating on a Volumetric Basis	**Calculating on a Liquid Weight Basis**	**Calculating on a Dry Weight Basis**
Basic Approach	$\frac{Feed\ rate}{flow\ rate} \times 10^6$	$\frac{Feed\ rate \times Specific\ Gravity}{flow\ rate} \times 10^6$	$\frac{Feed\ rate \times Specific\ Gravity \times Concentration}{flow\ rate} \times 10^6$
Pros	• Easiest calculation because it uses volumes only • Doesn't require any knowledge of chemical composition of the feed solution • Simplifies the preparation of stock solutions for jar tests • Can be used for alum blends	• Almost as simple as the volumetric calculation • Only requires the operator to know the specific gravity of the feed solution • Can be used for alum/polymer blends	• Can be used for both dry and liquid chemicals • Results can be compared with those of other plants since the dry weight method is the industry standard • Allows plants to establish historical dosage benchmarks despite changing vendors or product concentrations • Is the most accurate way to assess the true cost of liquid alum • Can be used for alum/polymer blends based on the alum concentration of the solution
Cons	• Can't be used for dry chemicals so it can be confusing to operators that have to use both liquid and solid chemicals • Results can't be compared with those at other plants unless they are using the exact same chemical.	• Can't be used for dry chemicals so it can be confusing to operators that have to use both liquid and solid chemicals • Results can't be compared with those at other plants unless they are using the exact same chemical.	• Most complex of the "liquid chemical" calculations. • Requires the operators to know both the specific gravity and chemical composition of the liquid chemical

Answers to Question 1	$\frac{0.1\ gpm}{1{,}000\ gpm} \times 1{,}000{,}000 = 100\ ppm$	$\frac{0.1\ gpm\ \times\ 1.34}{1{,}000\ gpm} \times 1{,}000{,}000 = 134\ ppm$	$\frac{0.1\ gpm\ \times\ 1.34\ \times\ 0.50}{1{,}000\ gpm} \times 1{,}000{,}000 = 67\ ppm$

Although you can calculate the chemical dose for liquid chemicals using any of the three methods, the TCEQ and most industry organizations recommend that you use the "Dry Weight Basis" method since it is the method used by most water treatment plants and liquid chemical suppliers.

Chemical Dosage Calculation Examples *(continued)*

Now that you have selected the method(s) that you will be using to calculate the dosage of your liquid chemical(s), we need you to answer the following questions to determine if you completely understand the method. Just a reminder . . . these sample calculations might not be "real world" examples.

Example Question No. 2:

Assume your plant was feeding 0.1 gpm of liquid coagulant into 2,000 gpm of raw water. Also, assume that the liquid coagulant has a specific gravity of 1.34 (that means it weighs 1.34 times as much as water, or 11.2 lbs/gal) and contains 50% dry alum. How would you calculate the coagulant dose that was being applied?

Example Question No. 3:

Assume your plant was feeding 0.3 gpm of liquid coagulant into 5,000 gpm of raw water. Also, assume that the liquid coagulant has a specific gravity of 1.33 (that means it weighs 1.33 times as much as water, or 11.1 lbs/gal) and contains 48% dry alum. How would you calculate the coagulant dose that was being applied?

Example Question No. 4:

Assume your plant was feeding 0.5 gpm of liquid coagulant into 10,000 gpm of raw water. Also, assume that the liquid coagulant has a specific gravity of 1.32 (that means it weighs 1.32 times as much as water, or 11.0 lbs/gal) and contains 47% dry alum. How would you calculate the coagulant dose that was being applied?

Volume Based Dosage Calculations for Liquid Aluminum Sulfate (Alum) (and other liquid chemicals)

Feed Rate to Dosage Calculation for Volume Based Doses

Equation 1: Feed rate to dosage, volume-based

$$\frac{Feed\ rate\ of\ liquid\ alum\left(\frac{ml}{minute}\right)}{Raw\ water\ flow\ rate\ (gpm) \times 3{,}785\frac{ml}{gal}} \times 10^6 = Volume\ based\ alum\ dose\ (ppm)$$

For example, if:

- The liquid alum feed rate is 100 ml/minute, and
- The raw water flow rate is 1,000 gpm

Then, substituting our feed rate and flow rate into Eq. 1, using those example numbers:

$$\frac{100\left(\frac{ml}{minute}\right)}{1{,}000\ gpm \times 3{,}785\frac{ml}{gal}} \times 1{,}000{,}000 = \frac{100\left(\frac{\cancel{ml}}{\cancel{min}}\right)}{1{,}000\ \cancel{gal/min} \times 3{,}785\frac{\cancel{ml}}{\cancel{gal}}} \times 1{,}000{,}000 = 26\ ppm$$

Note: In Equation 1, above, we chose to measure the feed rate in ml/min, because that is the way we most often measure it. We measured the raw water flow rate in gpm, because we normally measure the raw flow rate in gallons per minute (or MGD). However, to get a dose we can use, the feed rate of liquid alum and the raw water flow rate must be in the same units for the equation to work. We know that there are 3,785 ml in a gallon, so the raw water flow rate was multiplied by this conversion factor to get Equation 1.

Note: No conversions involving concentration or specific gravity were used in this calculation. The only units used were milliliters, gallons, minutes, and parts per million.

Dosage to Feed Rate Calculation for Volume Based Doses

Equation 2:

$$Feed\ rate\ of\ liquid\ alum\left(\frac{ml}{minute}\right) =$$

$$= \frac{Volume\ based\ alum\ dose\ (ppm) \times raw\ water\ flow\ rate\left(\frac{gal}{min}\right) \times 3{,}785\left(\frac{ml}{gal}\right)}{10^6}$$

For example, if:

- The dose is 30 ppm of liquid alum on a volume basis, and
- The raw water flow rate is 1,000 gpm

Then substituting our dose and raw water flow rates into Eq. 2:

$$Feed\ rate\ of\ liquid\ alum\left(\frac{ml}{minute}\right) = \frac{30\ ppm \times 1{,}000\left(\frac{\cancel{gal}}{min}\right) \times 3{,}785\left(\frac{ml}{\cancel{gal}}\right)}{1{,}000{,}000} = 114\ ml/min$$

Note: We can convert this feed rate to gpm, gph, or gpd by applying the factors from Handout B. Therefore:

$$144\frac{ml}{minute} \times 0.0002642\frac{gpm}{ml/min} = 0.038\,gpm$$

And:

$$144\frac{ml}{minute} \times 0.01585\frac{gph}{ml/min} = 2.28\,gph$$

And:

$$144\frac{ml}{minute} \times 0..38041\frac{gpm}{ml/min} = 54.8\,gpd$$

As with the dose calculation for volume to volume calculations, we had to convert the raw water flow rate to ml/minute using the factor "1 gpm = 3,785 ml/min".

Stock Solution Calculations for Volume Based Doses

Assumptions:

1. We want one ml of liquid alum stock solution to equal a change of 10 ppm in a 2,000 mL (2 L) jar. Then, the strength of the alum stock solution must be 2%, and
2. We want to make 1,000 mL of stock solution.

Equation 3:

$$\text{Volume of Alum in a Stock Solution (ml)} = \text{Stength of Solution}\left(\frac{\%}{100}\right) \times \text{Volume of Stock Solution (mL)}$$

And:

$$\text{Volume of Alum in a 2\% Stock Solution (ml)} = \left(\frac{2\%}{100}\right) \times 1{,}000\text{ml} = 20\text{ ml of Liquid Alum}$$

To prepare this stock solution, one would add 20 ml of Liquid Alum to a 1,000 ml volumetric flask or graduated cylinder and fill up the last 980 ml with deionized water.

<u>Development of the Volume Based Stock Solution Equation</u>

The concept of using a stock solution of a strength that 1 ml added to a 2,000 ml jar equals a 10 ppm dose is a common ratio. The operator could also use one mL = 5 ppm or one ml = 15 ppm, if those ratios would help define the dose necessary to coagulate, floc, and settle the raw water successfully.

For our example we will use one ml of stock solution in a 2,000 mL jar equals 10 ppm. Therefore:

$$10\ ppm\ = \frac{\frac{\%\ \text{Stock Solution (By Volume)}}{100}}{2{,}000\ ml}$$

Since:

$$10\ ppm\ = \frac{10\ ml\ of\ liquid\ alum}{1{,}000{,}000\ ml\ of\ Raw\ Water} = \frac{\frac{\%\ \text{Stock Solution}}{100}}{2{,}000\ ml}$$

Then:

$$\frac{10\ ml\ of\ liquid\ alum\ \times\ 2{,}000\ \ \times\ 100}{1{,}000{,}000\ ml\ of\ Raw\ Water} = \%\ \text{Stock Solution}\ = 2\%$$

Liquid Weight Based Dosage Calculations for Liquid Aluminum Sulfate (Alum) (and other liquid chemicals)

Feed Rate to Dosage Calculation for Liquid Weight Doses

Equation 4:

$$\frac{Feed\ rate\ of\ liquid\ alum\left(\frac{ml}{minute}\right) \times Sp.Gr.}{Raw\ water\ flow\ rate\ \frac{gal}{min}\ \times 3785\frac{ml}{\text{gal}}} \times\ 10^6\ =\ \ Liquid\ weight\ based\ alum\ dose\ (ppm)$$

Assumptions:

- The unit weight of liquid alum is 11.09 lbs/gal
- The unit weight of raw water is 8.34 lbs/gal
- The Specific Gravity of liquid alum is 1.33 (or, 11.08 lbs/gal ÷ 8.34 lbs/gal)
- The liquid alum feed rate is 100 ml/minute, and
- The raw water flow rate is 1,000 gpm

Then inserting our values into Eq. 4:

$$\frac{100\ \left(\frac{ml}{minute}\right) \times\ 1.33}{1{,}000\ gpm\ \ \times\ 3{,}785\frac{ml}{gal}} \times\ 1{,}000{,}000\ \ =\ \ \frac{100\ \left(\frac{\cancel{ml}}{\cancel{min}}\right) \times\ 1.33}{1{,}000\ \cancel{gal/min}\ \ \times\ 3{,}785\frac{\cancel{ml}}{\cancel{gal}}} \times\ 1{,}000{,}000\ =\ 35\ ppm$$

<u>Development of the Liquid Weight Based Equation</u>

The simplest liquid weight based equation, using pounds of liquid alum and pounds of raw water would be:

$$\frac{Feed\ rate\ of\ liquid\ alum\left(\frac{lbs}{min}\right)}{Raw\ water\ flow\ rate\ \left(\frac{lbs}{min}\right)} \times\ 10^6\ \ =\ Liquid\ weight\ based\ alum\ dose\ \left(ppm\ or\ \frac{pounds\ of\ liquid\ alum}{million\ pounds\ of\ raw\ water}\right)$$

However, we normally feeding liquid alum in volume per unit time (for example, ml/min). To convert the liquid alum feed rate to lbs of liquid alum per minute, we must apply several factors:

- The Sp.Gr. for the liquid alum (this may vary from load to load of liquid alum)
- The weight of water (8.34 lbs/gal) to go with the Sp.Gr.
- The conversion factor to covert from ml/min to gpm (3,785 ml/min per gpm)

Applying these factors:

$$Feed\ rate\frac{ml}{min} \times\ \frac{1\ gpm}{3785\frac{ml}{min}}\ \times\ Sp.Gr.\ \ \times\ 8.34\frac{lbs}{gal}\ = Feed\ rate\ in\ lbs/min$$

We also have to convert the raw water flow rate to lbs/min. We normally get the raw water flow rate in gpm or MGD. Let's use gpm. To convert gpm to lbs/min, we have to apply a single factor:

- The weight of water is 8.34 lbs/gal

$$Raw\ water\ flow\ rate\ \frac{gal}{min} \times 8.34\ \frac{lbs}{gal} = Raw\ water\ flow\ rate\ in\ lbs/min$$

Therefore:

$$\frac{Feed\ rate\ \frac{ml}{min} \times Sp.Gr. \times 8.34\frac{lbs}{gal}}{Raw\ water\ flow\ rate\ \frac{gal}{min} \times \frac{3{,}785\ ml/min}{gal/min} \times 8.34\frac{lbs}{gal}} \times 10^6 = \text{Dose (ppm)}$$

When we cancel out all the like units:

$$\frac{Feed\ rate\ \frac{ml}{min} \times Sp.Gr. \times \cancel{8.34\frac{lbs}{gal}}}{Raw\ water\ flow\ rate\ \frac{gal}{min} \times \frac{3{,}785\ ml/min}{gal/min} \times \cancel{8.34\frac{lbs}{gal}}} \times 10^6 = \text{Dose (ppm)}$$

And:

$$\frac{Feed\ rate\ \frac{ml}{min} \times Sp.Gr.}{Raw\ water\ flow\ rate\ (gpm) \times \frac{3{,}785\ ml/min}{gpm}} \times 10^6 = \text{Dose (ppm)}$$

Note: We did not cancel out the gpm units in the denominator because we must insert the raw water flow in gpm. Therefore, leaving the units in helps explain that part of the equation.

Dosage to Feed Rate Calculation for Liquid Weight Doses

Equation 5:

$$Feed\ rate\ of\ liquid\ alum\ \left(\frac{ml}{minute}\right) =$$

$$= \frac{Liquid\ weight\ based\ alum\ dose\ (ppm) \div 10^6 \times raw\ water\ flow\ rate\ \left(\frac{gpm}{min}\right) \times 3{,}785\frac{ml}{gal}}{Sp.Gr.}$$

Assumptions:

- The unit weight of liquid alum is 11.09 lbs/gal
- The unit weight of raw water is 8.34 lbs/gal
- The Specific Gravity of liquid alum is 1.33 (or, 11.08 lbs/gal ÷ 8.34 lbs/gal)
- The raw water flow rate will be given in gpm and not ml/mi
- The dose is 30 ppm (or $\frac{30\ lbs\ of\ liquid\ alum}{1{,}000{,}000\ lb\ of\ water}$, or $\frac{30\ mg\ of\ liquid\ alum}{1{,}000{,}000\ mg\ of\ water}$) , and
- The raw water flow rate is 1,000 gpm

Inserting our dose and raw water flow values into Eq. 5:

$$Feed\ rate\ of\ liquid\ alum\ \left(\frac{ml}{min}\right) = \frac{30\ ppm \times 1{,}000\ \left(\frac{\cancel{gal}}{min}\right) \times 3785\ \left(\frac{ml}{\cancel{gal}}\right)}{1{,}000{,}000 \times 1.33} = 85\ ml/min$$

Note: We can convert this feed rate to gpm, gph, or gpd by applying the correct conversion factors.

Therefore:

$$85\ \frac{ml}{minute} \times 0.0002642 \frac{gpm}{ml/min} = 0.0224\ gpm$$

And:

$$85\ \frac{ml}{minute} \times 0.01585 \frac{gph}{ml/min} = 1.35\ gph$$

And:

$$85\ \frac{ml}{minute} \times 0.38041 \frac{gpm}{ml/min} = 32.3 gpd$$

Stock Solution Calculation for Liquid Weight Based Doses

Assumptions:

1. We want one ml of liquid alum stock solution to equal a change of 10 ppm in a 2,000 ml (2 L) jar based on the weight of the liquid alum solution. Then, the strength of the alum stock solution must be 2%,
2. The Specific Gravity of liquid alum is 1.33, and
3. We want to make 1,000 ml of stock solution.

Equation 6:

$$\text{Volume of Alum in a Stock Solution (ml)} = \frac{\text{Stength of Solution } \left(\frac{\%}{100}\right) \times \text{ Volume of Stock Solution (ml)}}{\text{Specific Gravity of Liquid Alum}}$$

And:

$$\text{Volume of Alum in the Stock Solution (ml)} = \frac{\left(\frac{2\ \%}{100}\right) \times 1{,}000\ \text{(ml)}}{1.33} = 15.0 \text{ ml of Liquid Alum}$$

To prepare this stock solution, one would add 15 ml of Liquid Alum to a 1,000 ml volumetric flask or graduated cylinder and fill up the last 985 ml with deionized water.

<u>Development of the Liquid Weight Based Stock Solution Equation</u>

The concept of using a stock solution of a strength that 1 mL added to a 2,000 ml jar equals a 10 ppm dose is a common ratio. In this instance, we take into account that 2,000 ml of water equals 2,000 mg of water.

Therefore:

$$10\ ppm = \frac{\frac{\text{\% Stock Solution (By Liquid Weight)}}{100}}{2{,}000\ mg}$$

Since:

$$10\ ppm = \frac{10\ mg\ of\ liquid\ alum}{1{,}000{,}000\ mg\ of\ Raw\ Water} = \frac{\%\ \text{Stock Solution}}{2{,}000\ mg}$$

Then:

$$\frac{10\ mg\ of\ liquid\ alum\ \times\ 2{,}000\ \times\ 100}{1{,}000{,}000\ mg\ of\ Raw\ Water} = \%\ \text{Stock Solution} = 2\%$$

Dry Weight Based Dosage Calculations for Liquid Aluminum Sulfate (Alum) and Other Liquid Chemicals

Feed Rate to Dosage Calculation for Dry Weight Based Doses of Liquid Alum

Equation 7:

$$\frac{Feed\ rate\ of\ liquid\ alum\left(\frac{ml}{minute}\right) \times Sp.Gr. \times \text{Conc.}}{Raw\ water\ flow\ rate\ (gpm) \times 3{,}785\frac{ml}{gal}} \times 10^6 =$$

$$Dry\ weight\ based\ alum\ dose\ \left(ppm\ or\ \frac{pounds\ of\ dry\ alum}{million\ pounds\ of\ water}\right)$$

Assumptions:

- The unit weight of liquid alum is 11.09 lbs/gal
- The unit weight of raw water is 8.34 lbs/gal
- The Specific Gravity of liquid alum is 1.33 (or, 11.08 lbs/gal ÷ 8.34 lbs/gal)
- There are 3,785 ml per gallon, and
- 10^6 = 1,000,000
- The liquid alum feed rate is 200 ml/minute,
- The concentration (Conc.) of liquid alum is 48.1%, or 48.1 lbs of dry alum per 100 pounds of liquid alum (see the assumptions above), and
- The raw water flow rate is 1,000 gpm

Then inserting our values into Eq. 7:

$$\frac{200\left(\frac{ml}{minute}\right) \times 1.33 \times \frac{48.1\ \text{lbs of dry alum}}{100\ \text{lbs of liquid alum}}}{1{,}000\ gpm \times 3{,}785\frac{ml}{gal}} \times 1{,}000{,}000 = Dose\ (ppm)$$

Crossing out the units that cancel each other out and calculating:

$$\frac{200\left(\frac{\cancel{ml}}{\cancel{min}}\right) \times 1.33 \times .481\frac{\cancel{\text{lbs of dry alum}}}{\cancel{\text{lbs of liquid alum}}}}{1{,}000\ \cancel{gal/min} \times 3{,}785\frac{\cancel{ml}}{\cancel{gal}}} \times 1{,}000{,}000 = 33.8\ ppm$$

<u>Development of the Dry Weight Based Equation</u>

The simplest dry weight calculation of a dose using English units is:

$$\frac{Feed\ rate\ of\ dry\ alum\ (lbs/min)}{Raw\ water\ flow\ rate\ (lbs/min)} \times 10^6 = Dry\ weight\ based\ alum\ dose\ \left(ppm\ or\ \frac{pounds\ of\ dry\ alum}{million\ pounds\ of\ water}\right)$$

However, we are feeding "liquid alum" and not dry alum. We also measure the raw water flow rate in gpm and not in pounds per minute.

To convert the liquid alum flow rate in ml/min to a flow rate in weight, we multiply by the specific gravity for the liquid by the weight of the same volume of water to get the weight of the liquid chemical.

We also know from the conversion factors in Handout 1, that there are 3,785 milliliters in each gallon. So we must add conversion factors to our equation to account for the fact that we are feeding a liquid chemical and we are measuring water in gpm.

$$Feed\ rate\ of\ liquid\ alum\ \left(\frac{ml}{min}\right) \times\ Sp.Gr.\ \times 8.34\frac{\text{lbs}}{\text{gal}}\ \div 3{,}785\frac{ml}{gal}\ =\ Feed\ rate\ (\frac{liquid\ lbs}{\text{min}})$$

But now we have a feed rate based on liquid weight. We have to convert the liquid weight to dry weight to account for the fact that the active chemical is only part of the liquid weight. The additional factor we have to take into consideration is that there are only so many pounds of dry alum for each pound of liquid alum, and we call this the concentration (Conc.). If we add factors to convert, the feed rate becomes:

$$Feed\ rate\ of\ liquid\ alum\ \left(\frac{ml}{min}\right) \times\ Sp.Gr.\ \times 8.34\frac{\text{lbs}}{\text{gal}}\ \times \text{Conc.}\ \div 3{,}785\frac{ml}{gal}\ =\ Feed\ rate\ (\frac{dry\ lbs}{\text{min}})$$

However, even though we have converted the chemical feed rate in ml/min to dry pounds of alum per minute, we also have to convert the gpm flow rate to pounds of water minute. This is fairly straight forward:

$$\text{Raw water flow rate (gpm)} \times 8.34\frac{lbs}{gal}\ =\ Raw\ water\ flow\ in\ \frac{lbs}{min}$$

If we go back to our earlier dose calculation equation:

$$\frac{Feed\ rate\ of\ dry\ alum\ (lbs/min)}{Raw\ water\ flow\ rate\ (lbs/min)}\ \times\ 10^6\ =\ Dry\ weight\ based\ alum\ dose\ (ppm\ or\ \frac{pounds\ of\ dry\ alum}{million\ pounds\ of\ water})$$

And insert the feed rate and raw water flow rate calculations that we developed above, we get:

$$\frac{Feed\ rate\ of\ liquid\ alum\ \left(\frac{ml}{min}\right) \times\ Sp.Gr.\ \times 8.34\frac{\text{lbs}}{\text{gal}}\ \times\ \text{Conc.}\ \ \div\ 3{,}785\frac{ml}{gal}}{\text{Raw water flow rate (gpm)} \times 8.34\frac{\text{lbs}}{\text{gal}}}\ \times\ 10^6\ =$$

$$=\ Dry\ weight\ based\ alum\ dose\ (ppm\ or\ \frac{pounds\ of\ dry\ alum}{million\ pounds\ of\ water})$$

Notice that we can simplify this equation by crossing out units and factors that cancel:

$$\frac{Feed\ rate\ of\ liquid\ alum\ \left(\frac{ml}{min}\right) \times\ Sp.Gr.\ \times\ \cancel{8.34\frac{\text{lbs}}{\text{gal}}}\ \times\ \text{Conc.}}{\text{Raw water flow rate (gpm)} \times \cancel{8.34\frac{\text{lbs}}{\text{gal}}}\ \times\ 3{,}785\frac{ml}{gal}}\ \times\ 10^6\ =$$

$$=\ Dry\ weight\ based\ alum\ dose\ (ppm\ or\ \frac{pounds\ of\ dry\ alum}{million\ pounds\ of\ water})$$

And this becomes Equation 7.

Eq. 7: $\frac{Feed\ rate\ of\ liquid\ alum\left(\frac{ml}{minute}\right) \times Sp.Gr. \times \text{Conc.}}{Raw\ water\ flow\ rate\ (gpm) \times 3{,}785\frac{ml}{gal}} \times 10^6 =$

$$= Dry\ weight\ based\ alum\ dose\ \left(ppm\ or\ \frac{pounds\ of\ dry\ alum}{million\ pounds\ of\ water}\right)$$

Dosage to Feed Rate Calculations for Dry Weight Based Doses of Liquid Alum or Other Chemicals Mixed with Water

Equation 8:

$$Feed\ rate\ of\ liquid\ alum\left(\frac{ml}{minute}\right) =$$

$$= \frac{Dry\ weight\ based\ alum\ dose\ (ppm) \times raw\ water\ flow\ rate\left(\frac{gal}{min}\right) \times 3{,}785\left(\frac{ml}{gal}\right)}{(10^6 \times Sp.Gr. \times Conc.)}$$

For example, if:

- The liquid alum feed rate is 200 ml/minute,
- The concentration (C) of liquid alum is 48.1%, or 48.1 lbs of dry alum per 100 pounds of liquid alum (see the assumptions above), and
- The raw water flow rate is 1,000 gpm
- The dose is 30 ppm
  (or $\frac{30\ lbs\ of\ dry\ alum}{1{,}000{,}000\ lb\ of\ water}$, or $\frac{30\ mg\ of\ dr7\ alum}{1{,}000{,}000\ mg\ of\ water}$),
- The concentration, C, of liquid alum in this load of alum is 48.1%, or 48.1 lbs of dry alum per 100 lbs of liquid alum (see the assumptions, above), and
- The raw water flow rate is 1,000 gpm

Then, inserting our values into Eq. 8:

$$Feed\ rate\ of\ liquid\ alum\left(\frac{ml}{minute}\right) = \frac{30\ ppm \times 1{,}000\left(\frac{\cancel{gal}}{min}\right) \times 3785\left(\frac{ml}{\cancel{gal}}\right)}{1{,}000{,}000 \times 1.33 \times \frac{48.1\ \text{lbs of dry alum}}{100\ lbs\ of\ liquid\ alum}} = 177\ ml/min$$

Note: we can convert this feed rate to gpm, gph, or gpd by applying the factors from Handout 1:

Therefore:

$$177\ \frac{ml}{minute} \times 0.000264\frac{gpm}{ml/min} = 0.047\ gpm$$

And:

$$177\ \frac{ml}{minute} \times 0.01585\frac{gph}{ml/min} = 2.80\ gph$$

And:

$$177\ \frac{ml}{minute} \times 0.38041\frac{gpm}{ml/min} = 67.3gpd$$

Stock Solution Calculations for Dry Weight Based Doses of Liquid Alum or Other Chemicals Mixed with Water

Assumptions:

1. We want one ml of liquid alum stock solution to equal a change of 10 ppm in a 2,000 ml (2 L) jar based on the weight of the alum in the liquid alum solution. Then, the strength of the alum stock solution must be 2%,
2. The Specific Gravity of liquid alum is 1.33,
3. The concentration of ammonium sulfate in the liquid alum is 48.1%, and
4. We want to make 1,000 ml of stock solution.

Equation 9:

$$\text{Volume of Liquid Alum in a Stock Solution (mL)} = \frac{\text{Stength of Solution}\left(\frac{\%}{100}\right) \times \text{Volume of Stock Solution (mL)}}{\text{Specific Gravity of Liquid Alum} \times \left(\frac{\text{Concentration of Liquid Alum}}{100}\right)}$$

And:

$$\text{Volume of Alum in the Stock Solution (mL)} = \frac{\left(\frac{2\ \%}{100}\right) \times 1{,}000\ (\text{ml})}{1.33 \times \frac{48.1}{100}} = 31.3\ \text{mL of Liquid Alum}$$

To prepare this stock solution, one would add 31.3 ml of Liquid Alum to a 1,000 ml volumetric flask or graduated cylinder and fill up the last 985 ml with deionized water.

Development of the Liquid Weight Based Stock Solution Equation

The concept of using a stock solution of a strength that 1 mL added to a 2,000 mL jar equals a 10 ppm dose is a common ratio. In this instance, we take into account that 2,000 mL of water equals 2,000 mg of water.

Therefore:

$$10\ ppm = \frac{\frac{\%\ \text{Stock Solution (By Dry Weight of the Alum)}}{100}}{2{,}000\ mg}$$

Since:

$$10\ ppm = \frac{10\ mg\ of\ dry\ alum}{1{,}000{,}000\ mg\ of\ Raw\ Water} = \frac{\%\ \text{Stock Solution}}{2{,}000\ mg}$$

Then:

$$\frac{10\ mg\ of\ dry\ alum \times 2{,}000 \times 100}{1{,}000{,}000\ mg\ of\ Raw\ Water} = \%\ \text{Stock Solution} = 2\%$$

Dosage Calculations for Gaseous Chemicals and Dry Chemicals

Feed Rate to Dosage Calculations for Gas Chemicals

Assumptions:

- Typically, gas chemicals are 100% active chemical so a concentration factor is not used.

Equation 10:

$$Chemical\ Dose\ (ppm) = \frac{Gas\ Feed\ Rate\ (ppd)}{Raw\ Water\ Flow\ rate\ (gpm) \times 8.34\frac{lbs}{gal} \times 1440\frac{min}{day}} \times 10^6$$

For example, if:

- The gas feed rate is 20 ppd, and
- The raw water flow rate is 1000 gpm

Then:

$$Chemical\ Dose\ (ppm) = \frac{20\ ppd}{1{,}000\ gpm \times 8.34\frac{lbs}{gal} \times 1440\frac{min}{day}} \times 1{,}000{,}000$$

Crossing out the units that cancel each other out, we get:

$$Chemical\ Dose\ (ppm) = \frac{20\ \cancel{lbs}/\cancel{day}}{1{,}000\ \cancel{gal}/\cancel{min} \times 8.34\frac{\cancel{lbs}}{\cancel{gal}} \times 1440\frac{\cancel{min}}{\cancel{day}}} \times 1{,}000{,}000$$

$$Chemical\ Dose\ (ppm) = 1.67\ ppm$$

Feed Rate to Dosage Calculations for Solid Dry Chemicals

If we were feeding a dry chemical, such as HTH, the only difference we would have to make to this equation would be a Concentration factor. Equation 7 would become:

Equation 10a:

$$Chemical\ Dose\ (ppm) = \frac{Dry\ chemical\ feed\ rate\ (ppd) \times Conc.}{Raw\ Water\ Flow\ rate\ (gpm) \times 8.34\frac{lbs}{gal} \times 1440\frac{min}{day}} \times 10^6$$

Where: Conc. is the percent of calcium hypochlorite in the dry chemical mixture.

When dosing with dry chemicals that are 100% active ingredient, the concentration factor in Equation 10(a) would be 100%.

Dosage to Feed Rate Calculations for Gas Chemicals

Assumption:

- Gas chemicals are 100% active chemical so a concentration factor is not used.

Using:

Equation 11:

$$Gas\ feed\ rate\ (ppd, or\ \frac{lbs\ of\ gas}{day} =$$

$$= \frac{Chemical\ Dose\ \left(\frac{lbs}{million\ pounds\ of\ water}, or\ ppm\right)}{10^6} \times Raw\ Water\ Flow\ Rate\ (ppd)$$

Because we normally calculate raw water flow rate in MGD or gpm, we need conversion factors to adjust the raw water flow to something we normally use. If we calculate the flow rate in gpm, the equation becomes:

$$Gas\ feed\ rate\ (ppd, or\ \frac{lbs\ of\ gas}{day} =$$

$$= \frac{Chemical\ Dose\ (\ ppm)}{10^6} \times \text{Raw Water Flow Rate (gpm)} \times\ 8.34\frac{lbs}{gal}\ \times\ 1440\frac{min}{day}$$

For example, if:

- The gas dose 2 ppm, and
- The raw water flow rate is 1,000 gpm

Then:

$$Gas\ feed\ rate\ (ppd)\ =\ \frac{2.0\ ppm}{10^6}\ \times 1{,}000\ \text{gpm}\ \times\ 8.34\frac{lbs}{gal}\ \times\ 1{,}440\frac{min}{day}$$

$$Gas\ feed\ rate\ (ppd)\ =\ \frac{2.0\ ppm}{1{,}000{,}000}\ \times 1{,}000\ \cancel{\text{gal}}/\cancel{\text{min}}\ \times\ 8.34\frac{lbs}{\cancel{gal}}\ \times\ 1{,}440\frac{\cancel{min}}{day}$$

$$Gas\ feed\ rate\ (ppd)\ =\ 24\frac{lbs}{day}$$

Dosage to Feed Rate Calculations for Solid Dry Chemicals

When dosing with dry chemicals, the equations for gaseous chemicals apply exactly if the dry chemical is 100% active ingredients. If the dry feedstock only has a fraction of active chemical (for example HTH is normally only 65% calcium hypochlorite) then the dose in ppm would be divided by the concentration (for HTH, 0.65), but the rest of the equation would be the same.

Stock Solution Calculations for Dry Weight Based Doses of Liquid Alum or Other Chemicals Mixed with Water)

Assumptions:

1. We want one ml of stock solution to equal a change of 10 ppm in a 2,000 ml (2 L) jar based on the weight of active ingredients of the dry chemical. Then, the strength of the chemical stock solution must be 2%,
2. The percentage of active ingredient in the dry chemical that is 60%, and
3. We want to make 1,000 ml of stock solution.

Equation 12:

$$\text{Dry chemical Stock Solution (grams)} = \frac{\text{Stength of Solution}\left(\frac{\%}{100}\right) \times \text{Volume of Stock Solution (mL)}}{\left(\frac{\text{Percentage of active ingredient}}{100}\right)}$$

$$\text{Dry chemical Stock Solution (grams)} = \frac{\left(\frac{2\%}{100}\right) \times 1{,}000\ \text{(mL)}}{\left(\frac{60\%}{100}\right)} = 33\ \text{grams of dry chemical}$$

To prepare this stock solution, one would add 33 grams of dry chemical to a 1,000 ml volumetric flask or graduated cylinder and fill it up to the 1,000 ml line with deionized water.

Note: If the percentage of active ingredient in the dry chemical is 100%, then Equation 12 becomes:

$$\text{Dry chemical Stock Solution (grams)} = \left(\frac{2\%}{100}\right) \times 1{,}000\ \text{(ml)} = 20\ \text{grams of dry chemical}$$

Attachment 3 to the Student Guide
Preparing Stock Solutions

Directed Assistance Module 2-B

Establishing Appropriate Chemical Feed Rates

Using Representative Jar Testing

Definitions

Concentration: There are several different ways that "concentration is common used in chemistry, but the following definitions are the ways most useful for dosage calculations:

1. The percentage of dry chemical, by weight, mixed with water and used as a chemical feedstock.
2. The percentage of liquid chemical, by weight mixed with water and used as a chemical feedstock.

Specific gravity:

Feed rate: The feed rate is the measure of how much chemical is added to the treatment process per unit of time. Please note that the term "feed rate" is not the same as "dose" and is not directly related to the volume of water or the flow rate in the treatment unit to which it is added. It is only the measure of how much chemical is being fed, regardless of how much water it is being added to. Normal expressions of feed rate include:

1. Gallons per minute (gpm)
2. Gallons per hour (gph)
3. Milliliters per minute (ml/min)
4. Pounds per day (ppd)
5. Kilograms per day (kpd)

Dose (or dosage): There are a couple ways in which "dose" is used in drinking water treatment calculations:

1. The total amount of treatment chemical added to a volume of water. For example if you were to add 5.3 cups of 6.0% bleach to a 10,000 gallon storage tank, the "dose" could be expressed as:
    a. 5.3 Cups of bleach per 10,000 gallons
    b. 43 ounces of bleach per 10,000 gallons
    c. 2.0 mg/L of sodium hypochlorite.
2. **Chemical dose** A specific quantity of chemical applied to a specific quantity of fluid for a specific purpose.

Preparing Stock Solutions

Now that you understand how to calculate the chemical dose that you are applying, you need to know if that is the dose that you should be using. One way to determine whether or not you are applying an appropriate dose (even if it is not the most appropriate dose) is to monitor the performance of the plant. The chemical doses are ok if the plant is meeting your performance goals (and minimum regulatory requirements). Usually, operators have a pretty good feel for whether they need to tweak the feed rates up or down based on plant performance. However, this tweaking approach doesn't work so well if something has gone "terribly wrong" or the plant doesn't promptly respond as you expected when you adjust chemical feed rates.

When raw water quality changes significantly or you're having trouble controlling the settled water or filtered water turbidity levels, you may need to run a jar test to find out if you are even playing in the right ballpark. However, before you can run a jar test, you need to be able to prepare accurate stock solutions. If you can't prepare a good stock solution, you can't determine the chemical concentration in each of the jars. Consequently, we need to find out how you prepare your stock solutions before we begin talking about jar testing.

As in the case of calculating the dose of a dry chemical, all operators use the same calculation when determining the concentration of a stock solution prepared with dry chemicals. However, just as in the case of dosage calculations, operators can use any of three common methods to calculate the concentration of liquid chemical stock solutions; volumetric, liquid weight, or dry weight. To determine what method your plant is using to calculate the concentration of its liquid chemical stock solutions, we need you to answer the following question. We are aware that liquid alum might not come to you exactly this way; we used these numbers to make it easy to calculate and not because the numbers are exactly right.

Question 1: Assume that you want to a make one liter of a 2% stock solution. Also assume that the liquid coagulant has a specific gravity of 1.34 (that means it weighs 1.34 times as much as water, or 1.34 grams/liter) and contains 50% dry alum. How much of the liquid coagulant would you want to use and how much distilled water would you need?

As we just noted, operators use one of three common methods to calculate the concentration of liquid chemical stock solutions; volumetric, liquid weight, or dry weight. Although you can use any of these methods to prepare stock solutions accurately, you **MUST** use the same method to prepare the stock solution as the one you used to calculate the chemical dose. It is extremely important to use the same method because using different methods can result in poor performance if you use the wrong data for one calculation and not the other.

If your plant uses more than one liquid chemical, you can use different methods (volumetric, liquid weight, dry weight) for each chemical. **HOWEVER, FOR ANY GIVEN CHEMICAL, THE DOSE AND STOCK SOLUTION CONCENTRATION MUST BE CALCULATED USING THE SAME METHOD.** The following table summarizes the three different methods and the last line shows the answer to Question 0 when each method is used.

Preparing Stock Solutions *(continued)*

Method	Basic Approach to Determine mL of Liquid Coagulant Needed	Pros and Cons	Answer to Question 1
Calculating on a Volumetric Basis	$\text{Strength of Stock Solution}\left(\frac{\%}{100}\right) \times \text{Volume of Stock Solution}\left(mL\right)$	It doesn't matter because you **MUST** use the same method that you use to calculate actual chemical dosage. However, if you want to know the pros and cons, refer to the table in Attachment 3.	$\frac{2}{100} \times 1{,}000\ mL = 20\ mL$ or 20 mL of coagulant in 980 mL of distilled water
Calculating on a Liquid Weight Basis	$\frac{\text{Strength of Stock Solution}\left(\frac{\%}{100}\right) \times \text{Volume of Stock Solution}\left(mL\right)}{\text{Specific Gravity}}$		$\frac{\frac{2}{100} \times 1{,}000\ mL}{134} = 15\ mL$ or 15 mL of coagulant in 985 mL of distilled water
Calculating on a Dry Weight Basis	$\frac{\text{Strength of Stock Solution}\left(\frac{\%}{100}\right) \times \text{Volume of Stock Solution}\left(mL\right)}{\text{Specific Gravity} \times \text{Concentration}}$		$\frac{\frac{2}{100} \times 1{,}000\ mL}{134 \times 0.50} = 30\ mL$ or 30 mL of coagulant in 970 mL of distilled water

Now that you have selected the method(s) that you will be using to calculate the dosage of your liquid chemical(s), we need you to answer the following question to determine if you completely understand what we are trying to tell you.

Question No. 2: Assume that you are calculating the chemical dose of each of the following chemicals using the method shown. What method will you use to prepare the stock solution of that chemical when you run a jar test?

Chemical	Method used to calculate dose	Method used to prepare stock solution
Liquid alum coagulant	Dry weight	
Liquid alum with 1% copper sulfate	Dry weight	
Liquid polymer coagulant aid	Volumetric	

The point of this part of the training was . . . **YOU MUST PREPARE THE STOCK SOLUTION FOR A GIVEN CHEMICAL USING THE SAME METHOD THAT YOU USE TO CALCULATE THE CHEMICAL DOSE FOR THAT CHEMICAL.**

Attachment 4 to the Student Guide
Jar Testing Form

Directed Assistance Module 2-B

Establishing Appropriate Chemical Feed Rates Using Representative Jar Testing

Jar Testing Form

Rapid Mix/Floccualtor/Sedimentation Data Sheet

For use with the G Calculation Worksheet and JarSettings Help

Rapid Mix:

Hydraulic Mixing

Basin or Pipe Volume (gallons) _____
Flow Rate (gallons per day) _____
Headloss across basin/pipe (feet) _____
RPM of shaft _____

Turbine Mixing

Blade diameter (tip to tip) (feet) _____
Description of blade _____
Volume (cubic feet) _____
RPM of shaft _____

Flocculator:

Paddle Mixing

Area of Paddles (L x W x Number of Paddles) (feet) _____
Diameter of Paddles (tip to tip) (feet) _____
Volume (cubic feet) _____
RPM _____

NOTE: If using multiple stage flocculation, this information must be determined for each stage

Walking Beam Mixiing

Total Area of Paddles (A) _____
Paddle Stroke Length (L) _____
Volume of basin (V) _____
Drive RPM _____

NOTE: If using multiple stage flocculation, this information must be determined for each stage

Sedimentation

Without Tubes

Surface Area (square feet) _____
Floc to Sed Transition Time (minute) _____

With Tubes

Tube opening (inch) _____
Tube angle (degrees) _____
Tube Depth (inch) _____
Surface Area (square feet) _____
Floc to Sed Transition Time (minute) _____

More Than One Type of Jar Test

There are two types of jar tests; the conventional jar test and the dynamic jar test.

The conventional jar test is conducted with stock solutions and includes rapid mixing, flocculation, settling, and occasionally, filtering steps. The conventional jar test is primarily used to evaluate various coagulant and coagulant aid dosages and combinations.

The dynamic jar test uses either coagulated water collected at the effluent of the rapid mix or flocculated water collected at the effluent of the flocculator. If coagulated water is used, the test incorporates flocculation, settling, and, occasionally, filtering steps. If flocculated water is used, the test normally includes only the settling and, perhaps, filtration steps. The dynamic jar test is a useful tool to evaluate the performance of the existing coagulant combination and to "fine tune" the test conditions used in the conventional jar test.

To be a useful tool, jar test results must reflect actual plant performance. To achieve this objective, appropriate jar test conditions (mixing speeds, mixing times, and settling time) must be selected.

- Although the approximate conditions can be calculated based on a mathematical model of the plant, refinements are almost always necessary.
- These refinements usually require the staff to conduct a series of jar tests until they find the combination of conditions that most accurately simulates plant performance.
- The dynamic jar test is a very useful tool when running these "trial-and-error" tests since:
    - flocculated water can be used to model the sedimentation basin performance and, once that is done,
    - coagulated water can then be used to model the flocculation basin.
- This "trial-and-error" approach is almost always required because of the short-circuiting that occurs in most basins.

Jar Test Apparatus

Jar tests should be conducted with a jar test apparatus that uses square jars that hold two liters of water.

Note: Round jars tend to create conditions where there is a high circular water velocity but achieve minimal and non-uniform mixing. Additionally, smaller jars limit the depth from which settled water samples can be collected as well as the volume of settled water than can be obtained for testing.

The two-liter square jars allow the operators to achieve more uniform mixing conditions during the test. Each jar should have a sampling line located exactly 10 cm below the fill line to facilitate sampling at the end of the test. Finally, the jar test apparatus should have a lighted base and a dark background so that the floc particles can be easily observed and a digital rpm indicator or some other way to precisely control the mixing energy.

Jar Testing (continued)

Conventional Jar Tests

Initial rapid mix conditions

The initial rapid mix conditions are approximated using the theoretical mixing time in the rapid mix and the design *G* (mixing energy) value of the plant's rapid mix facility. The theoretical mixing time is calculated by dividing the volume of the rapid mix chamber by the flow rate of the raw water. The maximum rpm allowed by the jar test apparatus is often used if the actual design *G* is unknown. However, the speed at which the paddle must be set to turn at for that time is obtained by using the "G-Calculation Worksheet" and "Jar Test Worksheet" to set the speed for this exercise.

(Note: The initial mixing time and mixing speed (i.e., mixing energy) may need to be adjusted based on actual plant conditions. For example, an initial mixing time of 30 seconds should be used if the plant has an in-line static mixer, the mixing time may need to be adjusted to compensate for long lengths of coagulated water piping or short-circuiting, and the mixing speed may need to be reduced if the plant relies on hydraulic jumps or baffled mixing chambers for rapid mixing.)

$$\text{Initial rapid mix time (min)} = \frac{\text{Volume of Rapid Mix } (ft^3) \times \left(\frac{7.48\ gal}{ft^3}\right)}{\text{Flow Rate (gpm)}}$$

Initial flocculation conditions

As in the case of the rapid mix, the initial conditions for the flocculation step are based on the theoretical mixing time and the design G of the plant's flocculation facilities. The theoretical mixing time is calculated by dividing the total volume of the flocculator by the flow rate through the flocculator. A maximum mixing speed of 30 rpm should be used if the actual design G is unknown. However, the speed at which the paddle must be set to turn at for that time is obtained by using the "G-Calculation Worksheet" and "Jar Test Worksheet" to set the speed for this exercise. If the plant has multi-stage flocculators, the total mixing time should be proportioned based on proportional volume of each stage.

(Note: The initial mixing time and mixing speed (i.e., mixing energy) will probably need to be adjusted based on actual plant conditions. An initial mixing time for the flocculation step of 15 minutes should be used if the plant uses a slurry recirculation clarifier.)

$$\text{Initial flocculation time (min)} = \frac{\text{Volume of Flocculator } (ft^3) \times \left(\frac{7.48 \text{ gal}}{ft^3}\right)}{\text{Flow Rate (gpm)}}$$

Initial settling conditions

Unlike the rapid mix and flocculation steps, the initial conditions for the settling step are not based on the theoretical detention time of the clarification basin. Instead, the initial conditions in the settling step are based on the surface overflow rate in the plant's clarification basin and the depth at which the sample is collected from the jar test jars. The surface overflow rate for a basin is calculated by dividing the surface area of the settling zone by the flow rate through the basin. Based on a sample tap located 10 cm below the surface of the fill line in the jar, the following equation would apply:

$$\text{Initial settleing time (min)} = \frac{10 \text{ cm} \times \left(\frac{1 \text{ ft}}{30.54 \text{ cm}}\right) \times \left(\frac{7.48 \text{ gal}}{ft^3}\right) \times \text{Surface Area } (ft^2)}{\text{Flow Rate (gpm)}}$$

The reason that surface overflow rate, rather than detention time, is used to set the initial conditions for the settling step is because of a concept called Hazen's Law. Hazen's Law is a mathematical principle that shows that the efficiency of the settling process in an ideal basin (i.e., one that is not affected by hydraulic currents or short-circuiting) is governed by the surface overflow rate, and not the detention time, in the settling zone.

Dynamic Jar Tests

Settling Conditions

Dynamic jar tests can be used both to "fine tune" the settling time used in conventional jar tests and to predict the turbidity of the settled water for a given chemical dose. When used to "fine tune" the settling conditions for conventional jar tests, the turbidity of the settled water is measured (i.e., at the effluent of the sedimentation basin) and samples of flocculated water (i.e., water collected at the effluent of the flocculator) are used to fill each of the jar test jars. Settled water samples are collected at 5 minute intervals until the settled water turbidity from one of the jars is similar to the settled water turbidity measured at the effluent of the sedimentation basin. This settling time is then used during the conventional jar test to test other coagulant doses and combinations. *(Note: It is extremely important to carefully fill the jars so you minimize turbulence that can change the size of the floc and the settling characteristics of the flocculated water. Also, this procedure may need to be repeated when water quality, i.e., temperature, turbidity, etc., changes significantly or the raw water flow rate is varied.)*

Once the correct settling time is determined, the dynamic jar test can be used to predict the performance of the existing coagulant dose. In this type of dynamic jar test, a single jar is carefully filled to the line with a sample of flocculated water and allowed to settle for the appropriate period of time.

Flocculation Conditions

Dynamic jar tests can be used to identify the optimum mixing intensity in the flocculator of the full scale plant. They can also be used to select the appropriate mixing intensity and flocculation time that will be used during conventional jar tests.

The goal of this second reason is to create a set of test conditions that produce a floc that has the same appearance and settling characteristics as the floc produced by the plant's flocculator. To achieve this goal, a series of coagulated water samples are collected and mixed under various conditions until the floc characteristics match those of samples collected from the effluent of the flocculator.

Attachment 5 to the Student Guide
Jar Test Comparison Form

Directed Assistance Module 2-B

Establishing Appropriate Chemical Feed Rates Using Representative Jar Testing

JAR TEST COMPARISON FORM

Jar Test Conditions[1]	Before Training	After Training
Rapid Mix Conditions		
Flocculator, Stage 1 Conditions		
Flocculator, Stage 2 Conditions (if applicable)		
Flocculator, Stage 3 Conditions (if applicable)		
Settling		

Note: *(1)* Include the chemicals added during each stage of the test. Also include the mixing time and mixing speed (in either RPM or percent of maximum) used during each stage of the test.

Insert Spreadsheet Printouts from the Jar Test Worksheet, G-Calculation Worksheet, and Stock Solution Help Worksheet DAM 2-B

Conventions in this Module

Multiplied by:

In this Handout, the sign for performing multiplication may be "×" or "*". Both of these symbols represent the same thing in any equation. For example:

The equation: $6 \times 6 = 36$

means exactly the same as

This equation: $6 \bullet 6 = 36$

Also, when using variables, one does not have to use the multiplier sign:

The equation: $A \times B = AB$

and

Equation: $AB = A \times B$

Divided by:

In this Handout, the sign for performing division may be "÷", "/", or a horizontal line. Both of these symbols represent the same thing in any equation. For example:

The equation: $36 \div 6 = 6$

means exactly the same as

This equation: $36 / 6 = 6$

means exactly the same as

This equation: $\frac{36}{6} = 6$

Concentration (Conc.):

In this Handout, the term "concentration" (sometimes abbreviated, "Conc.") refers to the weight of an active ingredient in a chemical mixture divided by the total unit weight of the mixture expressed as a decimal fraction or as a percentage.

Residual (Res.)

In this Handout, the term "residual" (sometimes abbreviated, "Res.") refers to the mg/L, or ppm, of an active chemical in the "treated" water.

Flow Rates versus Feed Rates:

In this Handout, the term "flow rate" is normally used to describe the raw water flow or the treatment water flow. Typically it will be expressed in terms of millions of gallons per day (MGD) or gallons per minute (gpm). However, for some dose and feed rate calculations, the flow rate may need to be converted to milliliters per minute as an intermediate step in the calculation.

In this Handout, the term "feed rate" is normally used to describe the rate at which a chemical is applied to the water being treated. Typically it will be expressed in terms of pounds per day (ppd, or lbs/day), milliliters per minute (ml/min), pounds per day (ppd, or lbs/day), or gallons per minute (gpm).

Milligrams per Liter (mg/L) and parts per million (ppm):

In this Handout, for convenience, the terms "mg/L" and "ppm" are used describe a weight or volume based dose. When describing a weight based dose, the "ppm" is equal to mg/L. When calculating a volume based dose, the term ppm <u>does not</u> mean mg/L.

Use of Exponents:

- Dose and feed rate calculations often use a unitless factor of 10^6, which is also called 10 to the 6th power.

  When used, it means: $10^6 = 10 \times 10 \times 10 \times 10 \times 10 \times 10 = 1{,}000{,}000$

- When using an Excel spreadsheet to do some conversions from one unit of measure to another, the converted number is very small, and Excel resorts to a scientific notation which includes 10 to a negative power. For example, when converting one gallon per minute to millions of gallons per day (gpm to MGD) the answer in the spreadsheet is "6.944E-04". This term means:

$$6.944\text{E}-04 \;=\; 6.944 \times 10^{-4} \;=\; \frac{6.944}{(10 \times 10 \times 10 \times 10)}$$

Order of Execution in Equations:

In this Handout, the normal algebraic rules apply:

- Multiplication and division are performed first.
- Addition and subtraction are performed last.
- Like units in the numerator and the denominator of an algebraic expression cancel each other out.

Attachment 6 to the Student Guide
Calculating Chemical Feed Rates

Directed Assistance Module 2-B
Establishing Appropriate Chemical Feed Rates Using Representative Jar Testing

Calculating Chemical Feed Rates

Now that you understand how to calculate the chemical dose, make a stock solution, and run a conventional jar test, you need to determine what the actual chemical feed rate should be.

As in the case of calculating the dose of a dry or pure gas chemical, all operators use the same calculation when determining the concentration of a stock solution prepared with dry chemicals. They figure out how many pounds of chemical they want to add and they set the feeder to apply that much. Well surprise . . . . operators can use any of three common methods to determine what the feed rate of liquid chemicals should be: volumetric, liquid weight, or dry weight.

By now you probably know what is coming next . . . To determine what method your plant is using to set its liquid chemical feed rates, we need you to answer the following question. We are aware that liquid alum might not come to you exactly this way; we used these numbers to make it easy to calculate and not because the numbers are exactly right.

Question 1: Assume that your jar test results show that you should be applying 60 ppm of liquid alum. Also assume that the raw water flow rate is 2,000 gpm and that liquid alum has a specific gravity of 1.34 (that means it weighs 1.34 times as much as water, or 1.34 grams/liter) and contains 50% dry alum. What should the alum feed rate be (in mL per minute)?

As we just noted, operators use one of three common methods to calculate the desired feed rate: volumetric, liquid weight, or dry weight. Although you can use any of these methods to accurately calculate the feed rate, you **MUST** use the same method as the one you used to calculate the chemical dose. It is extremely important to use the same method because using different methods can result in poor performance if you use the wrong data for one calculation and not the other.

Just a quick reminder in case you have forgotten that if your plant uses more than one liquid chemical, you can use different methods (volumetric, liquid weight, dry weight) for each chemical. **HOWEVER, FOR ANY GIVEN CHEMICAL, THE DOSE AND STOCK SOLUTION CONCENTRATION MUST BE CALCULATED USING THE SAME METHOD.** The following table summarizes the three different methods and the last line shows the answer to Question 0 when each method is used.

Calculating Chemical Feed Rates *(continued)*

Method	Basic Approach to Determine mL of Liquid Coagulant Needed	Pros and Cons	Answer to Question 1
Calculating on a Volumetric Basis	$\text{Feed Rate (gpm)} = \frac{\text{Dose (ppm)} \times \text{Flow Rate (gpm)}}{10^6}$	It doesn't matter because you **MUST** use the same method that you use to calculate actual chemical dosage.	$\frac{60 \text{ ppm} \times 2{,}000 \text{ gpm}}{10^6} = 0.12 \text{ gpm}$
Calculating on a Liquid Weight Basis	$\text{Feed Rate (gpm)} = \frac{\text{Dose (ppm)} \times \text{Flow Rate (gpm)}}{\text{Specific Gravity} \times 10^6}$		$\frac{60 \text{ ppm} \times 2{,}000 \text{ gpm}}{1.34 \times 10^6} = 0.09 \text{ gpm}$
Calculating on a Dry Weight Basis	$\text{Feed Rate (gpm)} = \frac{\text{Dose (ppm)} \times \text{Flow Rate (gpm)}}{\text{Specific Gravity} \times 10^6}$	However, if you want to know the pros and cons, refer to the table in Attachment 3.	$\frac{60 \text{ ppm} \times 2{,}000 \text{ gpm}}{1.34 \times 0.50 \times 10^6} = 0.18 \text{ gpm}$

Attachment 2.
DAM 2B. Evaluation Form

(to be completed by plant staff who participated in the training activities)

Training location: _____ Date: _____

Instructor Name: _____

① Strongly Agree ② Agree ③ No Opinion ④ Disagree ⑤ Strongly Disagree

1. The agenda for this workshop accurately described the information being covered.	① ② ③ ④ ⑤
2. The information presented during the workshop was too technical or was too hard.	① ② ③ ④ ⑤
3. The information presented during the workshop was not technical enough.	① ② ③ ④ ⑤
4. The workshop covered too much information or the trainer went too fast.	① ② ③ ④ ⑤
5. The workshop covered too little information or the trainer went too slow.	① ② ③ ④ ⑤
6. The monitoring strategy developed during the workshop is useful.	① ② ③ ④ ⑤
7. The information on the Process Monitoring Form is understandable.	① ② ③ ④ ⑤
8. The training is <u>exactly</u> what we needed.	① ② ③ ④ ⑤
9. The training is valuable and will help us improve plant performance.	① ② ③ ④ ⑤
10. Our water system would be willing pay for this kind of training.	① ② ③ ④ ⑤

Questionnaire continues on the back

EVALUATION FORM, CONTINUED

Specific Suggestions:

What could we change in the agenda to improve it?

What did we not explain well enough for you to understand?

What areas did we spend too much time on?

What areas did we spend too little time on?

What are some other issues where you feel more training is needed?

What other comments or suggestions do you have?

Revision table

Date	Action	Comment
September 7, 2019	Revised	Revised to meet TCEQ accessibility standards