Recreational Use Attainability Analysis of Caney Creek Above Tidal (Segment 1305)

Appendix 2

Field Data Sheets

Field Data Sheets – Basic RUAA Survey

(should be completed for each site)

Data Collectors & Contact Information: Iokanath, Wrast, Ramirez, Shepherd	
Date & Time: 9:55 04/02/10	County Name: Wharton
Stream Name: Caney Creek above Tidal	
Segment No. or nearest downstream Segment No.: 1305	
Description of Site: Knox & N. Caney Trails @ Caney Creek	

At any point during the Basic RUAA Survey it becomes apparent that primary contact recreation is clearly the use for the water body the investigator should stop conducting the UAA.

A. Stream Characteristics:

1. Check the following channel flow status that applies.

☐ dry ☐ no flow ☐ low ☒ normal ☐ high ☐ flooded

2. Check the following stream type that applies on the day of the survey:

☐ Ephemeral: A stream which flows only during or immediately after a rainfall event, and contains no refuge pools capable of sustaining a viable community of aquatic organisms.

☐ Intermittent: A stream which has a period of zero flow for at least one week during most years. Where flow records are available, a stream with a 7Q2 flow of less than 0.1 cubic feet per second is considered intermittent.

☐ Intermittent w/ perennial pools: An intermittent stream which maintains persistent pools even when flow in the stream is less than 0.1 cubic feet per second.

☒ Perennial: A stream which flows continuously throughout the year. Perennial streams have a 7Q2 equal to or greater than 0.1 cubic feet per second.

☐ Designated or unclassified tidal stream: A stream that is tidally influenced. If you checked this box, you will need to contact the Water Quality Standards Group and evaluate whether or not a bathing beach is located along the tidal stream and whether or not a bathing beach is located along the estuary, bay or Gulf water that the tidal stream flows into.

3. Streamflow

Use USGS gage data (if a gage is located at a site or within a quarter mile of a site) or use the Stream Flow (Discharge) Measurement Form and follow the procedures outlined in the most recent TCEQ Surface Water Quality Monitoring Procedures, Volume 1, RG-415. If USGS gage data is used for a site, include that information as an attachment and list the streamflow on the sampling date below. If the stream flow taken at one site is representative of the flow at another site(s), then that flow can be used as the observed flow and should be documented below. If the stream flow measured at one site is different from another site, then stream flow should be taken at both sites. ~~0.923~~ 4.615 cfs KC took velocity measurements @ culvert under bridge

KC 10/28/10 ~~unable to calc.~~ ~~Stow~~, no depth written

4. Water Quality Data (Field Parameters)

Field parameters should be collected in accordance with the procedures outlined in the most recent TCEQ Surface Water Quality Monitoring Procedures, Volume 1.

Air Temp 26.5 °C Water Temp 24 °C Secchi 1.08 m

5. Riparian Zone (Mark dominant categories with L (Left Bank) and R (Right Bank). Bank orientation is determined by the investigator facing downstream.)

____ Forest	____ Urban	____ Rip rap
____ Shrub dominated corridor	____ Pasture	____ Concrete
____ Herbaceous marsh	____ Row crops	Other (specify): ____
L/R Mowed/maintained corridor	____ Denuded/Eroded bank	

6. Ease of bank access to the water body: ☐ Easy ☒ Moderately easy ☐ Moderately difficult ☐ Difficult

7. Please describe access opportunities or explain why the site is not easily accessible (Attach photos for documentation):

at points slippery and steep water access. except for at bridge, water access is only by personal property.

8. Dominant Primary Substrate

☐ Cobble ☐ Sand ☒ Silt ☐ Mud/Clay ☐ Gravel ☐ Bedrock ☐ Rip rap ☐ Concrete

E Kc

Q^2_{all} Q (m.s)

Field Data Sheets – Basic RUAA Survey

Stream Name Caney Creek above tidal Site: 1
Date: 04/02/10 Time: 09:55

B. Primary Contact Water Recreation Evaluation:

X Primary contact recreation draft definition: Water recreation activities, such as wading by children, swimming, water skiing, diving, tubing, surfing, and whitewater kayaking, canoeing, and rafting, involving a significant risk of ingestion of water.

1. Were water recreation activities that involve a significant risk of ingestion (full body immersion) observed at this site?

X Yes ☐ No primary contact recreation activities were observed

a. Check the following boxes of primary contact recreation activities observed at the time of the sampling event at the site (Attach photos of the activities or lack of activities).

X Wading-Children ☐ Tubing ☐ No primary contact activities that commonly occur were observed
☐ Wading-Adults ☐ Surfing
☐ Swimming ☐ Whitewater-kayaking, canoeing, rafting
☐ Water skiing ☐ Other: _____
☐ Diving ☐ frequent public swimming-created by publicly owned land or commercial operations

b. Check the number of individuals observed at the site: ☐ None X 1-10 ☐ 11-20 ☐ 20-50 ☐ greater than 50

c. Check the following that apply regarding the individuals proximity to the water body.

☐ Water in mouth or nose of the individual X Primary touch: Individual's body (or portion) immersed in water
X Secondary touch: fishing, pets and related contact with water ☐ Individual is in a boat touching water
X Individual is on shore near water within 8 meters (25ft) of water X Individual is well away from water between 8 and 30 meters (100 ft) ☐ Not applicable

2. If primary contact recreation activities are not observed, describe the physical characteristics of the water body that may hinder the frequency of primary contact (depth, etc.) (Attach photos, etc. for documentation).

Children wading... but soft silt bottom
debris in water (trees)

3. Describe if there is public access (e.g. parks, roads, etc.) (Attach photos, maps, etc. for documentation).

bridge crossing

4. Is an area with primary contact recreation activities or a bathing beach (e.g. state/local parks with swimming, etc.) located near (e.g. within 5 miles upstream and downstream) this site? NO

C. Secondary Contact Water Recreation Evaluation:

X Secondary contact recreation 1: Water recreation activities, such as fishing, commercial and recreational boating, and limited body contact incidental to shoreline activity, not involving a significant risk of water ingestion and that commonly occur.

- Secondary contact recreation 2: Water recreation activities, such as fishing, commercial and recreational boating, and limited body contact incidental to shoreline activity, not involving a significant risk of water ingestion but that occur less frequently than for secondary contact recreation 1 due to (1) physical characteristics of the water body and/or (2) limited public access.

1. Were water recreation activities observed at the site, but the nature of the recreation does not involve a significant risk of ingestion (e.g. secondary contact recreation activities)? ☐ Yes ☐ No secondary contact recreation activities were observed

a. Check the following boxes of secondary contact recreation activities that were observed at the time of the sampling event at the site (Attach photos of activities or lack of activities).

X Fishing – Trap fishing observed
X Boating-commercial, recreational
X Non-whitewater-kayaking, rafting, canoeing
☐ No secondary contact recreation activities were observed
☐ Other secondary contact activities: _____

Field Data Sheets – Basic RUAA Survey

Stream Name Caney Creek above Tidal Site: 1
Date: 04102110 Time: 09:55

b. Check the number of individuals observed at the site.
☐ None ☒ 1-10 ☐ 11-20 ☐ 20-50 ☐ greater than 50

c. Check the following that apply regarding the individuals proximity to the water body.
☒ Secondary touch: fishing, pets and related contact with water ☒ In a boat touching water
☒ Body on shore near water within 8 meters (25ft) of water ☒ Body well away from water between 8 and 30 meters (100 ft)

2. If secondary contact recreation activities are not observed, describe the physical characteristics of the water body that may hinder the frequency of secondary contact (Attach photos, etc. for documentation).

N/A

3. If secondary contact recreation activities are observed, how often do water recreational activities occur that do not involve a significant risk of water ingestion? ☒ frequently ☐ infrequently
Please describe how often the activities occur? ☐ Unknown ☐ Never ☒ Daily ☐ Monthly ☐ Yearly } from interviews.

4. If infrequently, what is the reason? ☐ physical characteristics of the water body ☐ limited public access ☐ other
If other, list reasons: _____

5. Describe the physical characteristics of the water body that hinders the frequency of secondary contact recreation (depth, etc.) (Attach photos or depth measurements, etc. for documentation).

Same as before

6. Describe why there is limited public access (e.g. lack of roads, river or stream banks overgrown, etc.) (Attach photos, maps, etc. for documentation).

Same "

D. Noncontact Recreation Evaluation
Noncontact recreation applies to water bodies where recreation activities do not involve a significant risk of water ingestion, and where primary and secondary contact recreation uses do not occur because of unsafe conditions, such as barge traffic.

1. Provide site-specific information and documentation (including photographs) regarding unsafe conditions, recreation activities, and presence or absence of water recreation activities.

Field Data Sheets – Basic RUAA Survey

Stream Name Caney Creek above Tidal Site: 1
Date: 04/02/10 FDS Page 3 of 8 Time: 9:55 - 11:20

E. Stream Channel and Substantial Pools
Please check the following which best describes the river or stream: X Wadeable ☐ Non-wadeable
but at points can not wade across entire width.

1. Wadeable Streams
Determine whether or not the average depth at the thalweg is greater than 0.5 meters and if there are substantial pools with a depth of 1 meter or greater. Walk an approximately 300 meter reach (total) at the site and take the following measurements within the 300 meter reach. Measurements should be taken during base flow conditions (sustained or typical dry, warm-weather flows between rainfall events, excluding unusual antecedent conditions of drought or wet weather

Also, take photos facing upstream, downstream, left bank, and right bank at the 30 meters, 150 meters, and 300 meters.
Photos #s (30 meters) Upstream ✓ Downstream ✓ Left Bank ✓ Right Bank ✓
Photos #s (150 meters) Upstream ✓ Downstream ✓ Left Bank ✓ Right Bank ✓
Photos #s (300 meters) Upstream ✓ Downstream ✓ Left Bank ✓ Right Bank ✓

a) Substantial pools - Measure the length of each pool (if > 10 pools only measure 10 pools), the width (at the widest point), and the deepest depth. A substantial pool is considered a pool greater than 10 meters in length for the purposes of a Basic RUAA Survey. If depth and/or width measurements were not attainable, explain why. Not Applicable

	Length (meters)	Width (meters)	Depth (meters)
Pool 1			
Pool 2			
Pool 3			
Pool 4			
Pool 5			
Pool 6			
Pool 7			
Pool 8			
Pool 9			
Pool 10			

b)Average depth at the thalweg –Take depth measurements approximately every 30 meters to calculate an average depth at the thalweg (at least 10 measurements needed). If depth and/or width measurements were not attainable, explain why.

Distance	Depth (meters)	
30 meters	3.4 ft	1.04m
60 meters	>4.1 ft	>1.25m
90 meters	>4.1 ft	>1.25m
120 meters	3.64 ft	1.11m
150 meters	>4.1 ft	>1.25m
180 meters	>4.1 ft	>1.25m
210 meters	>4.3 ft	>1.31m
240 meters	>4.1 ft	>1.25m
270 meters	>4.1 ft	>1.25m
300 meters	>4.2 ft	>1.28m
Average		1.22m

Secchi ~~1.88~~ 1.08

we were on Rt. bank 112.8 up bridge 136.6d

Field Data Sheets – Basic RUAA Survey

Stream Name Caney Creek above tidal Site: 1
Date: 4/2/10 Time: 09:55

c) Stream width - Measure (1) the width at one point which represents the typical average width of the 300 meter reach; (2) the width at the narrowest point of the stream within the 300 meter reach; and (3) the width at the widest point of the stream within the 300 meter reach.

Measurement Type	Width (meters)	
Typical Average Width of 300 meter reach	112.8ft	34.98m
Width at narrowest point of the stream within 300 meter reach	28 ~~ft~~.	8.53 m
Width at the widest point of the stream within 300 meter reach	136.6ft	41.64m

~~28 ft~~ KL 4-12-10

d) Is there sufficient water within a 300 meter stream reach during base flow conditions to support primary contact recreation? ☒ Yes ☐ No
COMMENTS:

2. Non-wadeable Streams
If accessible, take 10 width measurements which represent typical widths of the 300 meter reach. If the water is too deep and not accessible record the estimated average width of the water body.

Also, take photos facing upstream, downstream, left bank, and right bank at .
Photos #s (30 meters) Upstream____ Downstream____ Left Bank ____ Right Bank____
Photos #s (150 meters) Upstream____ Downstream____ Left Bank ____ Right Bank____
Photos #s (300 meters) Upstream____ Downstream____ Left Bank ____ Right Bank____

# Measurements	Width (meters)
1	
2	
3	
4	
5	
6	
7	
8	
9	
10	

Field Data Sheets – Basic RUAA Survey

Stream Name Caney Creek above tidal Site: 1
Date: 4/2/10 Time: 09:55

F. Additional RUAA Information

1. Check the following activities observed over the site reach.

- ☐ Drinking or water in mouth
- ☐ Bathing
- ☒ Walking
- ☐ Jogging/running
- ☐ Bicycling
- ☐ Standing
- ☐ Sitting
- ☐ Lying down/sleeping
- ☒ Playing on shoreline
- ☐ Picnicking
- ☒ Motorcycle/ATV
- ☒ Hunting/Trapping ← fish trapping
- ☐ Wildlife watching
- ☐ None
- ☐ Other: _____

2. Are there permanent or long-term hydrologic modifications that are constructed and operated in a way that affects the recreational uses? ☒ Yes ☐ No (If yes, please provide supporting documentation and photos.)
Comments: Culvert under bridge.

3. Check any channel obstructions that apply (Attach photos).

- ☒ Culverts
- ☐ Fences
- ☐ Log jams
- ☐ Rip rap
- ☐ Water control structure
- ☐ Barbed wire
- ☐ Dams
- ☐ Thick vegetation
- ☐ Low bridges
- ☐ None
- ☐ Utility pipe
- ☐ Other (specify): _____

4. Check all surrounding conditions that promote recreational activities (Attach photos of evidence or unusual items of interest).

- ☐ Campgrounds
- ☐ Playgrounds
- ☐ Rural area
- ☒ Residential
- ☐ National forests
- ☒ Urban/suburban location
- ☐ Golf Course
- ☐ Sports Field
- ☐ Stairs/walkway
- ☒ Boating access (ramps)
- ☐ Beach
- ☒ Bridge crossing
- ☐ Commercial boating
- ☐ Trails/paths (hiking/biking)
- ☐ Paved parking lot
- ☐ Unimproved parking lot
- ☒ Roads (paved/unpaved)
- ☒ Populated area
- ☒ Docks or rafts
- ☐ Commercial outfitter
- ☐ Nearby school
- ☐ Power Line Corridor
- ☐ Parks (national/city/county/state)
- ☐ Public Property
- ☐ Other: _____
- ☐ None of the Above

Comments: _____

5. Check all surrounding conditions that impede recreational activities (Attach photos of evidence or unusual items of interest).

- ☒ Private Property
- ☐ No trespass sign
- ☐ Wildlife
- ☐ Steep slopes
- ☐ No public access
- ☐ No roads
- ☐ Fence
- ☐ Barge/ship traffic
- ☐ Industrial
- ☐ None of the Above
- ☐ Other: _____

Comments: _____

6. Check any indications of human use (Attach photos).

- ☒ Roads
- ☐ Rope swings
- ☒ Dock/platform
- ☐ Foot paths/prints
- ☐ Other: _____
- ☒ RV/ATV Tracks
- ☐ Camping Sites
- ☐ Fire pit/ring
- ☒ Fishing Tackle
- ☐ NPDES Discharge
- ☐ Gates on corridor
- ☒ Children's toys
- ☐ Remnant's of Kid's play
- ☐ Organized event
- ☐ No Human Presence

Comments: razor scooter, bobber in water

Field Data Sheets – Basic RUAA Survey

Stream Name Caney Creek above tidal Site: 1
Date: 04/02/01 Time: 09:55

7. Check all water characteristics that apply (Attach photos).
Aquatic Vegetation: ☐ absent ☐ rare ☒ common ☐ abundant
Algae Cover: ☐ absent ☐ rare ☒ common ☐ abundant
Odor: ☒ none ☐ rare ☐ common ☐ abundant
Color: ☐ clear ☒ green ☐ red ☐ brown ☐ black
Bottom Deposit: ☐ sludge ☐ solids ☒ fine sediments ☐ none ☐ other
Water Surface: ☒ clear ☐ scum ☐ foam ☐ debris ☐ oil
Other: Water surface, but some floating vegetation in parts.

8. Vertebrates Observed within 300 meter reach

Snakes	☒ None	☐ slight presence	☐ moderate presence	☐ large presence
Water Dependent Birds	☐ None	☒ slight presence	☐ moderate presence	☐ large presence
Alligators	☒ None	☐ slight presence	☐ moderate presence	☐ large presence

Comments: ducks and white egret

9. Mammals Observed within 300 meter reach

Wild	☒ None	☐ slight presence	☐ moderate presence	☐ large presence
Domesticated Pets	☐ None	☐ slight presence	☒ moderate presence	☐ large presence
Livestock	☐ None	☒ slight presence	☐ moderate presence	☐ large presence
Feral Hogs	☒ None	☐ slight presence	☐ moderate presence	☐ large presence

Comments:

10. Evidence of wild animals or evidence of birds, cattle, hogs, etc.
☐ Tracks ☐ Fecal droppings ☐ Bird nests NO

11. Garbage Observed

Large garbage in the channel	☒ None	☐ Rare	☐ Common	☐ Abundant
Small garbage in the channel	☒ None	☐ Rare	☐ Common	☐ Abundant
Bank Garbage	☐ None	☒ Rare	☐ Common	☐ Abundant

Briefly describe the kinds of garbage observed:
plastic bags, bottles, etc.

12. Is the site located in a wildlife preserve with large wildlife (i.e waterfowl) population? ☐ Yes ☒ No

13. Please document any other relevant information regarding recreational activities and the water body in general (for example, area outside of the stream reach evaluated).

Excellent interviews conducted! Indicating 1° Contact.

Field Data Sheet - Basic RUAA Survey

Stream Flow (Discharge) Measurement

Stream: Caney Creek above tidal Date: 04/02/10

Site: 1 Site

Description: Knox and N. Caney Trails @ Caney Creek

Time Begin: 10:30 Time End: _____ Meter Type: Sontek Flowtracker

Observers: P. Lolcanath, J. Wrast, D. Ramirez Stream Width*: _____ Section Width (W): 4.85

Observations: _____

width of culvert (circular)

Section Midpoint (ft) (m)	Section Depth (ft) (m) (cm) (D)	Observational Depth** (ft)(m)	Velocity (V) At Point (ft/s)(m/s)	Velocity (V) Average (ft/s)(m/s)	Flow (Q) (m^3/s) (ft^3/s) Q = (W)(D)(V)
			0.02	0.5	
			0.02		
			0.03		
			0.09		
			0.09		

*Total Q = 4.615 cfs

unable to do flow, too deep.

> 4 ft.

* see following page for (Q) calculations ~~(Avg. velocity) x 0.2 x 2.445~~ ~~approx. flow = 0.923 cfs~~ MES

depth of water in culvert not taken, from pictures - water level is approx. half of culvert

Flow calculations for Caney Creek FS1 Site 1

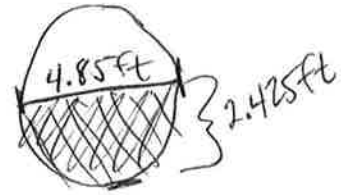

πr^2 = Area of circle

culvert $d = 4.85ft$, water level ~1/2 of culvert

Area of water

$A = \frac{1}{2}\pi(\frac{1}{2}d)^2$

$A = \frac{1}{2}(3.14)[\frac{1}{2}(4.85ft)]^2 = 9.23258\,ft^2 \rightarrow$

$\boxed{A = 9.23\,ft^2}$

Total $Q = A \cdot V$ $\quad V = 0.5\,ft/s$

$Q = (9.23\,ft^2)(0.5\,ft/s)$

$\boxed{Q = 4.615\,cfs}$

2

Field Data Sheets – Basic RUAA Survey

(should be completed for each site)

Data Collectors & Contact Information: P. Lokanath, J. Wrest, D. Ramirez, M. Shepard.	
Date & Time: 04/02/10 11:25-12:40	County Name: Wharton
Stream Name: Caney Creek above tidal	
Segment No. or nearest downstream Segment No.: 1305	
Description of Site: Hubenak Ln @ Caney Creek	

At any point during the Basic RUAA Survey it becomes apparent that primary contact recreation is clearly the use for the water body the investigator should stop conducting the UAA.

A. Stream Characteristics:

1. Check the following channel flow status that applies.
☐ dry ☐ no flow ☐ low ☒ normal ☐ high ☐ flooded

2. Check the following stream type that applies on the day of the survey:
☐ Ephemeral: A stream which flows only during or immediately after a rainfall event, and contains no refuge pools capable of sustaining a viable community of aquatic organisms.
☐ Intermittent: A stream which has a period of zero flow for at least one week during most years. Where flow records are available, a stream with a 7Q2 flow of less than 0.1 cubic feet per second is considered intermittent.
☐ Intermittent w/ perennial pools: An intermittent stream which maintains persistent pools even when flow in the stream is less than 0.1 cubic feet per second.
☒ Perennial: A stream which flows continuously throughout the year. Perennial streams have a 7Q2 equal to or greater than 0.1 cubic feet per second.
☐ Designated or unclassified tidal stream: A stream that is tidally influenced. If you checked this box, you will need to contact the Water Quality Standards Group and evaluate whether or not a bathing beach is located along the tidal stream and whether or not a bathing beach is located along the estuary, bay or Gulf water that the tidal stream flows into.

3. Streamflow
Use USGS gage data (if a gage is located at a site or within a quarter mile of a site) or use the Stream Flow (Discharge) Measurement Form and follow the procedures outlined in the most recent TCEQ Surface Water Quality Monitoring Procedures, Volume 1, RG-415. If USGS gage data is used for a site, include that information as an attachment and list the streamflow on the sampling date below. If the stream flow taken at one site is representative of the flow at another site(s), then that flow can be used as the observed flow and should be documented below. If the stream flow measured at one site is different from another site, then stream flow should be taken at both sites. ~~0.499~~ cfs ~~0.228~~ kc took velocity @ culvert under bridge. 0.571 cf/s

4. Water Quality Data (Field Parameters)
Field parameters should be collected in accordance with the procedures outlined in the most recent TCEQ Surface Water Quality Monitoring Procedures, Volume 1.
Air Temp 26 °C Water Temp 22 °C Secchi 1.004 m

5. Riparian Zone (Mark dominant categories with L (Left Bank) and R (Right Bank). Bank orientation is determined by the investigator facing downstream.)

_____ Forest	_____ Urban	_____ Rip rap
_____ Shrub dominated corridor	_____ Pasture	_____ Concrete
_____ Herbaceous marsh	_____ Row crops	Other (specify): _____
LR Mowed/maintained corridor	_____ Denuded/Eroded bank	

6. Ease of bank access to the water body: ☒ Easy ☐ Moderately easy ☐ Moderately difficult ☐ Difficult

7. Please describe access opportunities or explain why the site is not easily accessible (Attach photos for documentation): accessible by bridge, but lined by private property on either side.

8. Dominant Primary Substrate
☐ Cobble ☐ Sand ☒ Silt ☐ Mud/Clay ☐ Gravel ☐ Bedrock ☐ Rip rap ☐ Concrete

Q² DLR EKC Q (M.S)

Field Data Sheets – Basic RUAA Survey

Stream Name Caney Creek above tidal Site: 2
Date: 04/2/10 Time: 1125-1240

B. Primary Contact Water Recreation Evaluation:
- Primary contact recreation draft definition: Water recreation activities, such as wading by children, swimming, water skiing, diving, tubing, surfing, and whitewater kayaking, canoeing, and rafting, involving a significant risk of ingestion of water.

1. Were water recreation activities that involve a significant risk of ingestion (full body immersion) observed at this site?
☐ Yes ☒ No primary contact recreation activities were observed
a. Check the following boxes of primary contact recreation activities observed at the time of the sampling event at the site (Attach photos of the activities or lack of activities).

☐ Wading-Children	☐ Tubing	☒ No primary contact activities that commonly occur were observed
☐ Wading-Adults	☐ Surfing	
☐ Swimming	☐ Whitewater-kayaking, canoeing, rafting	
☐ Water skiing	☐ Other: _____	
☐ Diving	☐ frequent public swimming-created by publicly owned land or commercial operations	

b. Check the number of individuals observed at the site: ☐ None ☒ 1-10 ☐ 11-20 ☐ 20-50 ☐ greater than 50

c. Check the following that apply regarding the individuals proximity to the water body.
☐ Water in mouth or nose of the individual ☐ Primary touch: Individual's body (or portion) immersed in water
☐ Secondary touch: fishing, pets and related contact with water ☐ Individual is in a boat touching water
☒ Individual is on shore near water within 8 meters (25ft) of water ☒ Individual is well away from water between 8 and 30 meters (100 ft) ☐ Not applicable

2. If primary contact recreation activities are not observed, describe the physical characteristics of the water body that may hinder the frequency of primary contact (depth, etc.) (Attach photos, etc. for documentation).
vegetation on banks (emergent veg.) and debris on waterway (trees)

3. Describe if there is public access (e.g. parks, roads, etc.) (Attach photos, maps, etc. for documentation).
pub. access @ bridge.

4. Is an area with primary contact recreation activities or a bathing beach (e.g. state/local parks with swimming, etc.) located near (e.g. within 5 miles upstream and downstream) this site? NO

C. Secondary Contact Water Recreation Evaluation:
- Secondary contact recreation 1: Water recreation activities, such as fishing, commercial and recreational boating, and limited body contact incidental to shoreline activity, not involving a significant risk of water ingestion and that commonly occur.
- Secondary contact recreation 2: Water recreation activities, such as fishing, commercial and recreational boating, and limited body contact incidental to shoreline activity, not involving a significant risk of water ingestion but that occur less frequently than for secondary contact recreation 1 due to (1) physical characteristics of the water body and/or (2) limited public access.

1. Were water recreation activities observed at the site, but the nature of the recreation does not involve a significant risk of ingestion (e.g. secondary contact recreation activities)? ☐ Yes ☐ No secondary contact recreation activities were observed
a. Check the following boxes of secondary contact recreation activities that were observed at the time of the sampling event at the site (Attach photos of activities or lack of activities).
☐ Fishing
☐ Boating-commercial, recreational
☐ Non-whitewater-kayaking, rafting, canoeing
☒ No secondary contact recreation activities were observed
☐ Other secondary contact activities: _____

Field Data Sheets – Basic RUAA Survey

Stream Name Caney Creek above tidal Site: 2
Date: Time:

b. Check the number of individuals observed at the site.
☐ None ☒ 1-10 ☐ 11-20 ☐ 20-50 ☐ greater than 50

c. Check the following that apply regarding the individuals proximity to the water body.
☐ Secondary touch: fishing, pets and related contact with water ☐ In a boat touching water
☒ Body on shore near water within 8 meters (25ft) of water ☒ Body well away from water between 8 and 30 meters (100 ft)

2. If secondary contact recreation activities are not observed, describe the physical characteristics of the water body that may hinder the frequency of secondary contact (Attach photos, etc. for documentation).

Same as before

3. If secondary contact recreation activities are observed, how often do water recreational activities occur that do not involve a significant risk of water ingestion? ☐ frequently ☐ infrequently
Please describe how often the activities occur? ☒ Unknown ☐ Never ☐ Daily ☐ Monthly ☐ Yearly

4. If infrequently, what is the reason? ☐ physical characteristics of the water body ☐ limited public access ☐ other
If other, list reasons: NA

5. Describe the physical characteristics of the water body that hinders the frequency of secondary contact recreation (depth, etc.) (Attach photos or depth measurements, etc. for documentation).

Same as before

6. Describe why there is limited public access (e.g. lack of roads, river or stream banks overgrown, etc.) (Attach photos, maps, etc. for documentation).

Not limited public access, except for private property all places other than bridge crossing.

D. Noncontact Recreation Evaluation

Noncontact recreation applies to water bodies where recreation activities do not involve a significant risk of water ingestion, and where primary and secondary contact recreation uses do not occur because of unsafe conditions, such as barge traffic.

1. Provide site-specific information and documentation (including photographs) regarding unsafe conditions, recreation activities, and presence or absence of water recreation activities.

Field Data Sheets – Basic RUAA Survey

Stream Name Caney Creek above tidal Site: 2
Date: 4/2/10 FDS Page 3 of 8 Time: 1125 – 1240

E. Stream Channel and Substantial Pools
Please check the following which best describes the river or stream: ☒ Wadeable ☐ Non-wadeable

1. Wadeable Streams
Determine whether or not the average depth at the thalweg is greater than 0.5 meters and if there are substantial pools with a depth of 1 meter or greater. Walk an approximately 300 meter reach (total) at the site and take the following measurements within the 300 meter reach. Measurements should be taken during base flow conditions (sustained or typical dry, warm-weather flows between rainfall events, excluding unusual antecedent conditions of drought or wet weather

Also, take photos facing upstream, downstream, left bank, and right bank at the 30 meters, 150 meters, and 300 meters.
Photos #s (30 meters) Upstream ✓ Downstream ✓ Left Bank ✓ Right Bank ✓
Photos #s (150 meters) Upstream ✓ Downstream ✓ Left Bank ✓ Right Bank ✓
Photos #s (300 meters) Upstream ✓ Downstream ✓ Left Bank ✓ Right Bank ✓

but @ times too deep to wade entire width

a) Substantial pools - Measure the length of each pool (if > 10 pools only measure 10 pools), the width (at the widest point), and the deepest depth. A substantial pool is considered a pool greater than 10 meters in length for the purposes of a Basic RUAA Survey. If depth and/or width measurements were not attainable, explain why. Not Applicable

	Length (meters)	Width (meters)	Depth (meters)
Pool 1			
Pool 2			
Pool 3			
Pool 4			
Pool 5			
Pool 6			
Pool 7			
Pool 8			
Pool 9			
Pool 10			

b)Average depth at the thalweg –Take depth measurements approximately every 30 meters to calculate an average depth at the thalweg (at least 10 measurements needed). If depth and/or width measurements were not attainable, explain why.

Distance	Depth (meters)	
30 meters	>4.2 ft	>1.28 m
60 meters	3.7 ft	1.13 m
90 meters	3.7 ft	1.13 m
120 meters	3.55	1.08 m
150 meters	>4.2	>1.28 m
180 meters	2.6 ft (@ the bridge)	.79 m
210 meters	>4.3	>1.31 m
240 meters	>4.1	>1.25 m
270 meters	>4.3	>1.31 m
300 meters	3.4	1.04 m
Average		1.16 m

Field Data Sheets – Basic RUAA Survey

Stream Name Caney Creek above tidal Site: 2
Date: 4/2/10 Time: 1125-1240

c) Stream width - Measure (1) the width at one point which represents the typical average width of the 300 meter reach; (2) the width at the narrowest point of the stream within the 300 meter reach; and (3) the width at the widest point of the stream within the 300 meter reach.

Measurement Type	Width (meters)
Typical Average Width of 300 meter reach	39 ft 11.89 m
Width at narrowest point of the stream within 300 meter reach	23 7.01 m
Width at the widest point of the stream within 300 meter reach	46 14.02 m

d) Is there sufficient water within a 300 meter stream reach during base flow conditions to support primary contact recreation? ☒ Yes ☐ No
COMMENTS:

2. Non-wadeable Streams
If accessible, take 10 width measurements which represent typical widths of the 300 meter reach. If the water is too deep and not accessible record the estimated average width of the water body.

Also, take photos facing upstream, downstream, left bank, and right bank at .
Photos #s (30 meters) Upstream____ Downstream____ Left Bank ____ Right Bank____
Photos #s (150 meters) Upstream____ Downstream____ Left Bank ____ Right Bank____
Photos #s (300 meters) Upstream____ Downstream____ Left Bank ____ Right Bank____

# Measurements	Width (meters)
1	
2	
3	
4	
5	
6	
7	
8	
9	
10	

39 m

Field Data Sheets – Basic RUAA Survey

Stream Name: Caney Creek above tidal Site: 2
Date: 4/2/10 Time: 1125-1240

F. Additional RUAA Information

1. Check the following activities observed over the site reach.

- ☐ Drinking or water in mouth
- ☐ Bathing
- ☒ Walking
- ☐ Jogging/running
- ☐ Bicycling
- ☐ Standing
- ☐ Sitting
- ☐ Lying down/sleeping
- ☐ Playing on shoreline
- ☐ Picnicking
- ☐ Motorcycle/ATV
- ☐ Hunting/Trapping
- ☐ Wildlife watching
- ☐ None
- ☐ Other: _____

2. Are there permanent or long-term hydrologic modifications that are constructed and operated in a way that affects the recreational uses? ☒ Yes ☐ No (If yes, please provide supporting documentation and photos.)
Comments: Culvert, fence

3. Check any channel obstructions that apply (Attach photos).

- ☒ Culverts
- ☒ Barbed wire
- ☐ Utility pipe
- ☒ Fences
- ☐ Dams
- ☐ Other (specify): _____
- ☒ Log jams
- ☐ Thick vegetation
- ☐ Rip rap
- ☐ Low bridges
- ☐ Water control structure
- ☐ None

4. Check all surrounding conditions that promote recreational activities (Attach photos of evidence or unusual items of interest).

- ☐ Campgrounds
- ☐ Playgrounds
- ☐ Rural area
- ☒ Residential
- ☐ National forests
- ☐ Urban/suburban location
- ☐ Golf Course
- ☐ Sports Field
- ☒ Stairs/walkway
- ☐ Boating access (ramps)
- ☐ Beach
- ☒ Bridge crossing
- ☐ Commercial boating
- ☐ Trails/paths (hiking/biking)
- ☐ Paved parking lot
- ☐ Unimproved parking lot
- ☒ Roads (paved/unpaved)
- ☐ Populated area
- ☐ Docks or rafts
- ☐ Commercial outfitter
- ☐ Nearby school
- ☐ Power Line Corridor
- ☐ Parks (national/city/county/state)
- ☐ Public Property
- ☐ Other: _____
- ☐ None of the Above

Comments: _____

5. Check all surrounding conditions that impede recreational activities (Attach photos of evidence or unusual items of interest).

- ☒ Private Property
- ☐ No trespass sign
- ☒ Wildlife
- ☐ Steep slopes
- ☐ No public access
- ☐ No roads
- ☒ Fence
- ☐ Barge/ship traffic
- ☐ Industrial
- ☐ None of the Above
- ☐ Other: _____

Comments: _____

6. Check any indications of human use (Attach photos).

- ☒ Roads
- ☐ Rope swings
- ☐ Dock/platform
- ☒ Foot paths/prints
- ☐ Other: _____
- ☐ RV/ATV Tracks
- ☐ Camping Sites
- ☒ Fire pit/ring
- ☐ Fishing Tackle
- ☐ NPDES Discharge
- ☐ Gates on corridor
- ☒ Children's toys
- ☐ Remnant's of Kid's play
- ☐ Organized event
- ☐ No Human Presence

Comments: _____

Field Data Sheets – Basic RUAA Survey

Stream Name Caney Creek above tidal Site: 2
Date: 4/29/10 Time: 1125-1240

7. Check all water characteristics that apply (Attach photos).
Aquatic Vegetation: ☐ absent ☐ rare ☒ common ☐ abundant
Algae Cover: ☐ absent ☐ rare ☒ common ☐ abundant
Odor: ☒ none ☐ rare ☐ common ☐ abundant
Color: ☐ clear ☒ green ☐ red ☐ brown ☐ black
Bottom Deposit: ☐ sludge ☐ solids ☒ fine sediments ☐ none ☐ other
Water Surface: ☒ clear ☐ scum ☐ foam ☐ debris ☐ oil
Other: Some "scum" floating algae mats.

8. Vertebrates Observed within 300 meter reach
Snakes ☐ None ☐ slight presence ☒ moderate presence (3) ☐ large presence
Water Dependent Birds ☐ None ☒ slight presence ☐ moderate presence ☐ large presence
Alligators ☒ None ☐ slight presence ☐ moderate presence ☐ large presence
Comments: ducks.

9. Mammals Observed within 300 meter reach
Wild ☒ None ☐ slight presence ☐ moderate presence ☐ large presence
Domesticated Pets ☐ None ☐ slight presence ☒ moderate presence ☐ large presence
Livestock ☐ None ☐ slight presence ☒ moderate presence ☐ large presence
Feral Hogs ☒ None ☐ slight presence ☐ moderate presence ☐ large presence
Comments: dogs, cows, horses

10. Evidence of wild animals or evidence of birds, cattle, hogs, etc.
☐ Tracks ☐ Fecal droppings ☐ Bird nests NA

11. Garbage Observed
Large garbage in the channel ☒ None ☐ Rare ☐ Common ☐ Abundant
Small garbage in the channel ☐ None ☒ Rare ☐ Common ☐ Abundant
Bank Garbage ☐ None ☒ Rare ☐ Common ☐ Abundant
Briefly describe the kinds of garbage observed: Styrofoam plates and bottles on bank. Soccer ball,

12. Is the site located in a wildlife preserve with large wildlife (i.e waterfowl) population? ☐ Yes ☒ No

13. Please document any other relevant information regarding recreational activities and the water body in general (for example, area outside of the stream reach evaluated).

Lots of Poison ivy

* See attached Flow calculations sheet

Field Data Sheet - Basic RUAA Survey

Stream Flow (Discharge) Measurement

Stream: Caney Creek above tidal Date: 4/2/10

Site: 2 Site

Description: Hubenak Ln @ Caney Creek

Time Begin: 12:20 Time End: 12:33 Meter Type: Sontek Flowtracker

Observers: Stream Width*: Section Width (W):

Observations: Culvert width = 3.15 ft

Section Midpoint (ft) (m)	Section Depth (ft) (m) (cm) (D)	Observational Depth** (ft)(m)	Velocity (V) At Point (ft/s)(m/s)	Velocity (V) Average (ft/s)(m/s)	Flow (Q) (m^3/s)(ft^3/s) Q = (W)(D)(V)
	3ft				
	3ft	0.6	0.00		
		2.4	0.04 *		
	3ft	0.6	0.13		
		2.4	-0.02		
	3ft	0.6	0.16		
		2.4	-0.02 *		
	3ft	0.6	0.15		

Took velocity measurements @ culvert

* wind blowing relatively strongly while taking velocity measurement

site ② air temp 26°C

Avg vel = 0.0286

KC 10/27/10

site ① → temp 24°C

flow = 0.228 * Total Q = 0.571 cfs

Flow Calculations for Caney Creek Field Survey Site 2

- 3 replicate velocity measurements were taken at the culvert for each of the two depths and averaged:
  *The first measurement taken at 0.6 ft (0.00 ft/s) was discarded due to the large difference from the other 3 readings (seen on original flow worksheet)

Depth	Velocity 1 (ft/s)	Velocity 2 (ft/s)	Velocity 3 (ft/s)	Average Velocity
0.6ft (20%)	0.13	0.16	0.15	0.15 ft/s
2.4ft (80%)	0.04	-0.02	-0.02	0.00 ft/s

- Average velocity for the "cell" = (0.15 + 0.00)/2 = 0.07 ft/s
- Area (πr^2) of circular culvert based upon diameter of 3.15 ft:
  Radius = 3.15/2 = 1.575
  π = 3.14

$$\pi r^2 = 3.14\ (1.575)^2 = 7.7891625\ ft^2$$

- Flow (Q) calculated using a version of the original equation Q = (W)(D)(V), where (W)(D) = the area of the culvert

$$Q = (7.789\ ft^2)(0.07\ ft/s) = \mathbf{0.571 ft^3/s\ or\ cfs}$$

Field Data Sheets – Basic RUAA Survey

(should be completed for each site)

Data Collectors & Contact Information:	Wrust, Lokanath, Ramirez, Shepard
Date & Time: 12:50 - 1330 04/02/10	County Name: Wharton
Stream Name: Caney Creek above tidal	
Segment No. or nearest downstream Segment No.: 1305	
Description of Site: May Rd and Brod Rd @ Caney Creek	

At any point during the Basic RUAA Survey it becomes apparent that primary contact recreation is clearly the use for the water body the investigator should stop conducting the UAA.

A. Stream Characteristics:

1. Check the following channel flow status that applies.

☐ dry ☐ no flow ☒ low ☐ normal ☐ high ☐ flooded

2. Check the following stream type that applies on the day of the survey:

☐ Ephemeral: A stream which flows only during or immediately after a rainfall event, and contains no refuge pools capable of sustaining a viable community of aquatic organisms.

☐ Intermittent: A stream which has a period of zero flow for at least one week during most years. Where flow records are available, a stream with a 7Q2 flow of less than 0.1 cubic feet per second is considered intermittent.

☒ Intermittent w/ perennial pools: An intermittent stream which maintains persistent pools even when flow in the stream is less than 0.1 cubic feet per second.

☐ Perennial: A stream which flows continuously throughout the year. Perennial streams have a 7Q2 equal to or greater than 0.1 cubic feet per second.

☐ Designated or unclassified tidal stream: A stream that is tidally influenced. If you checked this box, you will need to contact the Water Quality Standards Group and evaluate whether or not a bathing beach is located along the tidal stream and whether or not a bathing beach is located along the estuary, bay or Gulf water that the tidal stream flows into.

3. Streamflow

Use USGS gage data (if a gage is located at a site or within a quarter mile of a site) or use the Stream Flow (Discharge) Measurement Form and follow the procedures outlined in the most recent TCEQ Surface Water Quality Monitoring Procedures, Volume 1, RG-415. If USGS gage data is used for a site, include that information as an attachment and list the streamflow on the sampling date below. If the stream flow taken at one site is representative of the flow at another site(s), then that flow can be used as the observed flow and should be documented below. If the stream flow measured at one site is different from another site, then stream flow should be taken at both sites. 0.063 cfs

4. Water Quality Data (Field Parameters)

Field parameters should be collected in accordance with the procedures outlined in the most recent TCEQ Surface Water Quality Monitoring Procedures, Volume 1.

Air Temp 27 °C Water Temp 22 °C Secchi 0.46 m

5. Riparian Zone (Mark dominant categories with L (Left Bank) and R (Right Bank). Bank orientation is determined by the investigator facing downstream.)

____ Forest	____ Urban	____ Rip rap
____ Shrub dominated corridor	____ Pasture	____ Concrete
____ Herbaceous marsh	____ Row crops	Other (specify): ____
L/R Mowed/maintained corridor	____ Denuded/Eroded bank	

6. Ease of bank access to the water body: ☒ Easy ☐ Moderately easy ☐ Moderately difficult ☐ Difficult

7. Please describe access opportunities or explain why the site is not easily accessible (Attach photos for documentation): access along bridge crossing and CR 156 private property on both sides downstream. Otherwise easy access. Low slope, etc.

8. Dominant Primary Substrate

☐ Cobble ☐ Sand ☒ Silt ☐ Mud/Clay ☐ Gravel ☐ Bedrock ☐ Rip rap ☐ Concrete

EKC

Field Data Sheets – Basic RUAA Survey

Stream Name Caney Creek above tidal Site: 3
Date: 4/2/10 Time: 1300

B. Primary Contact Water Recreation Evaluation:
- Primary contact recreation draft definition: Water recreation activities, such as wading by children, swimming, water skiing, diving, tubing, surfing, and whitewater kayaking, canoeing, and rafting, involving a significant risk of ingestion of water.

1. Were water recreation activities that involve a significant risk of ingestion (full body immersion) observed at this site?
☐ Yes ☒ No primary contact recreation activities were observed
a. Check the following boxes of primary contact recreation activities observed at the time of the sampling event at the site (Attach photos of the activities or lack of activities).

☐ Wading-Children	☐ Tubing	☒ No primary contact activities that commonly occur were observed
☐ Wading-Adults	☐ Surfing	
☐ Swimming	☐ Whitewater-kayaking, canoeing, rafting	
☐ Water skiing	☐ Other: _____	
☐ Diving	☐ frequent public swimming-created by publicly owned land or commercial operations	

b. Check the number of individuals observed at the site: ☒ None ☐ 1-10 ☐ 11-20 ☐ 20-50 ☐ greater than 50

c. Check the following that apply regarding the individuals proximity to the water body.
☐ Water in mouth or nose of the individual ☐ Primary touch: Individual's body (or portion) immersed in water
☐ Secondary touch: fishing, pets and related contact with water ☐ Individual is in a boat touching water
☐ Individual is on shore near water within 8 meters (25ft) of water ☐ Individual is well away from water between 8 and 30 meters (100 ft) ☒ Not applicable

2. If primary contact recreation activities are not observed, describe the physical characteristics of the water body that may hinder the frequency of primary contact (depth, etc.) (Attach photos, etc. for documentation).
relatively shallow water, heavy emergent vegetation in water

3. Describe if there is public access (e.g. parks, roads, etc.) (Attach photos, maps, etc. for documentation).
bridge crossing.

4. Is an area with primary contact recreation activities or a bathing beach (e.g. state/local parks with swimming, etc.) located near (e.g. within 5 miles upstream and downstream) this site? NO

C. Secondary Contact Water Recreation Evaluation:
- Secondary contact recreation 1: Water recreation activities, such as fishing, commercial and recreational boating, and limited body contact incidental to shoreline activity, not involving a significant risk of water ingestion and that commonly occur.
- Secondary contact recreation 2: Water recreation activities, such as fishing, commercial and recreational boating, and limited body contact incidental to shoreline activity, not involving a significant risk of water ingestion but that occur less frequently than for secondary contact recreation 1 due to (1) physical characteristics of the water body and/or (2) limited public access.

1. Were water recreation activities observed at the site, but the nature of the recreation does not involve a significant risk of ingestion (e.g. secondary contact recreation activities)? ☐ Yes ☒ No secondary contact recreation activities were observed
a. Check the following boxes of secondary contact recreation activities that were observed at the time of the sampling event at the site (Attach photos of activities or lack of activities).
☐ Fishing
☐ Boating-commercial, recreational
☐ Non-whitewater-kayaking, rafting, canoeing
☒ No secondary contact recreation activities were observed
☐ Other secondary contact activities: _____

Field Data Sheets – Basic RUAA Survey

Stream Name Caney Creek above tidal Site: 3
Date: 4/2/10 Time: 1300

b. Check the number of individuals observed at the site.
X None ☐ 1-10 ☐ 11-20 ☐ 20-50 ☐ greater than 50

c. Check the following that apply regarding the individuals proximity to the water body.
☐ Secondary touch: fishing, pets and related contact with water ☐ In a boat touching water
☐ Body on shore near water within 8 meters (25ft) of water ☐ Body well away from water between 8 and 30 meters (100 ft)

2. If secondary contact recreation activities are not observed, describe the physical characteristics of the water body that may hinder the frequency of secondary contact (Attach photos, etc. for documentation).

Same as before

3. If secondary contact recreation activities are observed, how often do water recreational activities occur that do not involve a significant risk of water ingestion? ☐ frequently ☐ infrequently N/A
Please describe how often the activities occur? ☐ Unknown ☐ Never ☐ Daily ☐ Monthly ☐ Yearly

4. If infrequently, what is the reason? ☐ physical characteristics of the water body ☐ limited public access ☐ other
If other, list reasons: _____

5. Describe the physical characteristics of the water body that hinders the frequency of secondary contact recreation (depth, etc.) (Attach photos or depth measurements, etc. for documentation).

Same

6. Describe why there is limited public access (e.g. lack of roads, river or stream banks overgrown, etc.) (Attach photos, maps, etc. for documentation).

Same

D. Noncontact Recreation Evaluation

Noncontact recreation applies to water bodies where recreation activities do not involve a significant risk of water ingestion, and where primary and secondary contact recreation uses do not occur because of unsafe conditions, such as barge traffic.

1. Provide site-specific information and documentation (including photographs) regarding unsafe conditions, recreation activities, and presence or absence of water recreation activities.

Field Data Sheets – Basic RUAA Survey

Stream Name Caney Crek above tidal Site: 3
Date: 4/2/10 FDS Page 3 of 8 Time: 1250 - 1330

E. Stream Channel and Substantial Pools
Please check the following which best describes the river or stream: X Wadeable ☐ Non-wadeable

1. Wadeable Streams
Determine whether or not the average depth at the thalweg is greater than 0.5 meters and if there are substantial pools with a depth of 1 meter or greater. Walk an approximately 300 meter reach (total) at the site and take the following measurements within the 300 meter reach. Measurements should be taken during base flow conditions (sustained or typical dry, warm-weather flows between rainfall events, excluding unusual antecedent conditions of drought or wet weather

Also, take photos facing upstream, downstream, left bank, and right bank at the 30 meters, 150 meters, and 300 meters.
Photos #s (30 meters) Upstream ✓ Downstream ✓ Left Bank ✓ Right Bank ✓ + extra
Photos #s (150 meters) Upstream ✓ Downstream ✓ Left Bank ✓ Right Bank ✓ (culverts)
Photos #s (300 meters) Upstream ✓ Downstream ✓ Left Bank ___ Right Bank ✓
← interrupted by irate residents, no pic taken

a) Substantial pools - Measure the length of each pool (if > 10 pools only measure 10 pools), the width (at the widest point), and the deepest depth. A substantial pool is considered a pool greater than 10 meters in length for the purposes of a Basic RUAA Survey. If depth and/or width measurements were not attainable, explain why.

	Length (meters)	Width (meters)	Depth (meters)
Pool 1			
Pool 2			
Pool 3			
Pool 4			
Pool 5			
Pool 6			
Pool 7			
Pool 8			
Pool 9			
Pool 10			

b)Average depth at the thalweg –Take depth measurements approximately every 30 meters to calculate an average depth at the thalweg (at least 10 measurements needed). If depth and/or width measurements were not attainable, explain why.

Distance	ft	Depth (meters)
30 meters	0.16 ft	0.049 m
60 meters	0.26	0.079 m
90 meters	0.26	0.079 m
120 meters	2.4	0.73 m
150 meters	0.8	0.24 m
180 meters	0.8	0.24 m
210 meters	1.1	0.34 m
240 meters	1.2	0.37 m
270 meters	2.2	0.67 m
300 meters	1.7	0.52 m
Average		0.33 m

← (paddle boat on bank pic)

Field Data Sheets – Basic RUAA Survey

Stream Name Caney Creek above tidal Site: 3
Date: 4/2/10 Time: 1250 - 1330

c) Stream width - Measure (1) the width at one point which represents the typical average width of the 300 meter reach; (2) the width at the narrowest point of the stream within the 300 meter reach; and (3) the width at the widest point of the stream within the 300 meter reach.

Measurement Type	ft	Width (meters)
Typical Average Width of 300 meter reach	44.6	13.59 m
Width at narrowest point of the stream within 300 meter reach	3.6	1.097 m
Width at the widest point of the stream within 300 meter reach		33 m

d) Is there sufficient water within a 300 meter stream reach during base flow conditions to support primary contact recreation? ☐ Yes ☒ No
COMMENTS:

2. Non-wadeable Streams
If accessible, take 10 width measurements which represent typical widths of the 300 meter reach. If the water is too deep and not accessible record the estimated average width of the water body.

Also, take photos facing upstream, downstream, left bank, and right bank at .
Photos #s (30 meters) Upstream____ Downstream____ Left Bank ____ Right Bank____
Photos #s (150 meters) Upstream____ Downstream____ Left Bank ____ Right Bank____
Photos #s (300 meters) Upstream____ Downstream____ Left Bank ____ Right Bank____

# Measurements	Width (meters)
1	
2	
3	
4	
5	
6	
7	
8	
9	
10	

Field Data Sheets – Basic RUAA Survey

Stream Name Caney Creek above tidal Site: 3
Date: 4/2/10 Time: ~~1300~~ 1250-1330
LL 4/5/10

F. Additional RUAA Information

1. Check the following activities observed over the site reach.

- ☐ Drinking or water in mouth
- ☐ Bathing
- ☐ Walking
- ☐ Jogging/running
- ☐ Bicycling
- ☐ Standing
- ☐ Sitting
- ☐ Lying down/sleeping
- ☐ Playing on shoreline
- ☐ Picnicking
- ☐ Motorcycle/ATV
- ☐ Hunting/Trapping
- ☐ Wildlife watching
- ☒ None
- ☐ Other: _____

2. Are there permanent or long-term hydrologic modifications that are constructed and operated in a way that affects the recreational uses? ☒ Yes ☐ No (If yes, please provide supporting documentation and photos.)
Comments: Culverts / bridge (3 large culverts)

3. Check any channel obstructions that apply (Attach photos).

- ☒ Culverts
- ☐ Barbed wire
- ☐ Utility pipe
- ☐ Fences
- ☐ Dams
- ☐ Other (specify): _____
- ☐ Log jams
- ☐ Thick vegetation
- ☐ Rip rap
- ☐ Low bridges
- ☐ Water control structure
- ☐ None

4. Check all surrounding conditions that promote recreational activities (Attach photos of evidence or unusual items of interest).

- ☐ Campgrounds
- ☐ Playgrounds
- ☐ Rural area
- ☒ Residential
- ☐ National forests
- ☒ Urban/suburban location
- ☐ Golf Course
- ☐ Sports Field
- ☐ Stairs/walkway
- ☐ Boating access (ramps)
- ☐ Beach
- ☒ Bridge crossing
- ☐ Commercial boating
- ☐ Trails/paths (hiking/biking)
- ☐ Paved parking lot
- ☐ Unimproved parking lot
- ☒ Roads (paved/unpaved)
- ☒ Populated area
- ☐ Docks or rafts
- ☐ Commercial outfitter
- ☐ Nearby school
- ☐ Power Line Corridor
- ☐ Parks (national/city/county/state)
- ☐ Public Property
- ☐ Other: _____
- ☐ None of the Above

Comments: _____

5. Check all surrounding conditions that impede recreational activities (Attach photos of evidence or unusual items of interest).

- ☒ Private Property
- ☐ No trespass sign
- ☐ Wildlife
- ☐ Steep slopes
- ☐ No public access
- ☐ No roads
- ☐ Fence
- ☐ Barge/ship traffic
- ☐ Industrial
- ☐ None of the Above
- ☐ Other: _____

Comments: _____

6. Check any indications of human use (Attach photos).

- ☒ Roads
- ☐ Rope swings
- ☐ Dock/platform
- ☐ Foot paths/prints
- ☐ Other: _____
- ☐ RV/ATV Tracks
- ☐ Camping Sites
- ☐ Fire pit/ring
- ☐ Fishing Tackle
- ☐ NPDES Discharge
- ☐ Gates on corridor
- ☐ Children's toys
- ☐ Remnant's of Kid's play
- ☐ Organized event
- ☐ No Human Presence

Comments: _____

Field Data Sheets – Basic RUAA Survey

Stream Name: Caney Creek above tidal Site: 3
Date: 4/2/10 Time: ~~1300~~ 1250-1330 LK

7. Check all water characteristics that apply (Attach photos).
Aquatic Vegetation: ☐ absent ☐ rare ☒ common ☐ abundant
Algae Cover: ☐ absent ☐ rare ☒ common ☐ abundant
Odor: ☒ none ☐ rare ☐ common ☐ abundant
Color: ☐ clear ☒ green ☐ red ☐ brown ☐ black
Bottom Deposit: ☐ sludge ☐ solids ☒ fine sediments ☐ none ☐ other
Water Surface: ☐ clear ☒ scum ☐ foam ☐ debris ☐ oil
Other: Water surface: floating algae mats.

8. Vertebrates Observed within 300 meter reach (1)

Snakes	☐ None	☒ slight presence	☐ moderate presence	☐ large presence
Water Dependent Birds	☒ None	☐ slight presence	☐ moderate presence	☐ large presence
Alligators	☒ None	☐ slight presence	☐ moderate presence	☐ large presence

Comments:

9. Mammals Observed within 300 meter reach

Wild	☒ None	☐ slight presence	☐ moderate presence	☐ large presence
Domesticated Pets	☒ None	☐ slight presence	☐ moderate presence	☐ large presence
Livestock	☐ None	☐ slight presence	☒ moderate presence	☐ large presence
Feral Hogs	☒ None	☐ slight presence	☐ moderate presence	☐ large presence

Comments: horses, sheep, cow

10. Evidence of wild animals or evidence of birds, cattle, hogs, etc.
☐ Tracks ☐ Fecal droppings ☐ Bird nests

11. Garbage Observed

Large garbage in the channel	☒ None	☐ Rare	☐ Common	☐ Abundant
Small garbage in the channel	☒ None	☒ Rare	☐ Common	☐ Abundant
Bank Garbage	☒ None	☐ Rare	☐ Common	☐ Abundant

Briefly describe the kinds of garbage observed:
plastic bag in water

12. Is the site located in a wildlife preserve with large wildlife (i.e waterfowl) population? ☐ Yes ☒ No

13. Please document any other relevant information regarding recreational activities and the water body in general (for example, area outside of the stream reach evaluated).
large tree down @ 30 m. fell across main channel.
fairly heavy traffic on bridge (farm machinery)

Field Data Sheet - Basic RUAA Survey

Stream Flow (Discharge) Measurement

Stream: Caney Creek above tidal Date: 04/02/10

Site: 3 Site

Description: May Rd and Brod Rd @ Caney Creek

Time Begin: 12:55 Time End: 1310 Meter Type: Sontek Flowtracker

Observers: P. Iokanath, J. Wiest Stream Width*: 18 ft Section Width (W): 1.8 ft

Observations:

Section Midpoint (ft)(m)	Section Depth (ft)(m) (cm) (D)	Observational Depth** (ft)(m)	Velocity (V) At Point (ft/s)(m/s)	Velocity (V) Average (ft/s)(m/s)	Flow (Q) (m^3/s)(ft^3/s) Q = (W)(D)(V)	
					KC 10/27/10	
0.9	NA			N.A	~~NA~~ 0.000	Too shallow
2.7	0.3			-0.00	~~-0.00~~	0.000
4.5	0.6			-0.01	~~-0.01~~	-0.011
6.3	0.6			-0.02	~~-0.02~~	-0.022
8.1	0.45			-0.00	~~-0.00~~	0.000
9.9	0.40			-0.002	~~-0.02~~	-0.014
11.7	0.40			-0.00	~~-0.00~~	0.000
13.5	0.30			-0.03	~~-0.03~~	-0.016
15.3	N.A			N.A	~~N.A~~ 0.000	too shallow
17.1	N.A			N.A	~~N.A~~ 0.000	too shallow

Wind is blowing ~~to~~ really ~~high~~ hard creating ~~cou~~ counter current

water is stagnant

Total cf/s = -0.063 E Wiest 5/10

Field Data Sheets – Basic RUAA Survey

(should be completed for each site)

Data Collectors & Contact Information: P. Lokomath, J. WRAST, D. Ramirez, M. Shepard	
Date & Time: 4/2/10 13:35 -1345	County Name: Wharton
Stream Name: Caney Creek above tidal	
Segment No. or nearest downstream Segment No.: 1305	
Description of Site: May Rd and CR 109 @ Caney Creek	

At any point during the Basic RUAA Survey it becomes apparent that primary contact recreation is clearly the use for the water body the investigator should stop conducting the UAA.

A. Stream Characteristics:

1. Check the following channel flow status that applies.
☐ dry ☐ no flow ☒ low ☐ normal ☐ high ☐ flooded

2. Check the following stream type that applies on the day of the survey:
☐ Ephemeral: A stream which flows only during or immediately after a rainfall event, and contains no refuge pools capable of sustaining a viable community of aquatic organisms.
☐ Intermittent: A stream which has a period of zero flow for at least one week during most years. Where flow records are available, a stream with a 7Q2 flow of less than 0.1 cubic feet per second is considered intermittent.
☐ Intermittent w/ perennial pools: An intermittent stream which maintains persistent pools even when flow in the stream is less than 0.1 cubic feet per second.
☒ Perennial: A stream which flows continuously throughout the year. Perennial streams have a 7Q2 equal to or greater than 0.1 cubic feet per second.
☐ Designated or unclassified tidal stream: A stream that is tidally influenced. If you checked this box, you will need to contact the Water Quality Standards Group and evaluate whether or not a bathing beach is located along the tidal stream and whether or not a bathing beach is located along the estuary, bay or Gulf water that the tidal stream flows into.

3. Streamflow
Use USGS gage data (if a gage is located at a site or within a quarter mile of a site) or use the Stream Flow (Discharge) Measurement Form and follow the procedures outlined in the most recent TCEQ Surface Water Quality Monitoring Procedures, Volume 1, RG-415. If USGS gage data is used for a site, include that information as an attachment and list the streamflow on the sampling date below. If the stream flow taken at one site is representative of the flow at another site(s), then that flow can be used as the observed flow and should be documented below. If the stream flow measured at one site is different from another site, then stream flow should be taken at both sites. 0.00 cfs Velocity taken @ culvert
~~-0.026~~ KC 10/28/10 * Flow essentially 0 cfs

4. Water Quality Data (Field Parameters)
Field parameters should be collected in accordance with the procedures outlined in the most recent TCEQ Surface Water Quality Monitoring Procedures, Volume 1.
Air Temp 26 °C Water Temp 22 °C Secchi 0.832 m

5. Riparian Zone (Mark dominant categories with L (Left Bank) and R (Right Bank). Bank orientation is determined by the investigator facing downstream.)

L/R Forest	____ Urban	____ Rip rap
____ Shrub dominated corridor	____ Pasture	____ Concrete
____ Herbaceous marsh	____ Row crops	Other (specify): ____
____ Mowed/maintained corridor	____ Denuded/Eroded bank	

6. Ease of bank access to the water body: ☐ Easy ☒ Moderately easy ☐ Moderately difficult ☐ Difficult

7. Please describe access opportunities or explain why the site is not easily accessible (Attach photos for documentation): access at bridge, but barbedwire fence across creek upstream and thick vegetation in water and bank downstream

8. Dominant Primary Substrate
☐ Cobble ☐ Sand ☒ Silt ☐ Mud/Clay ☐ Gravel ☐ Bedrock ☐ Rip rap ☐ Concrete

Q 2 OPR E KC
Q (M.S)

Field Data Sheets – Basic RUAA Survey

Stream Name Caney Creek above tidal Site: 4
Date: 4/2/10 Time: ~~0955~~ 1335 - 1345
LK 4/5/10

B. Primary Contact Water Recreation Evaluation:
- Primary contact recreation draft definition: Water recreation activities, such as wading by children, swimming, water skiing, diving, tubing, surfing, and whitewater kayaking, canoeing, and rafting, involving a significant risk of ingestion of water.

1. Were water recreation activities that involve a significant risk of ingestion (full body immersion) observed at this site?
☐ Yes ☒ No primary contact recreation activities were observed

a. Check the following boxes of primary contact recreation activities observed at the time of the sampling event at the site (Attach photos of the activities or lack of activities).

☐ Wading-Children ☐ Tubing ☒ No primary contact activities that commonly occur were observed
☐ Wading-Adults ☐ Surfing
☐ Swimming ☐ Whitewater-kayaking, canoeing, rafting
☐ Water skiing ☐ Other: _____
☐ Diving ☐ frequent public swimming-created by publicly owned land or commercial operations

b. Check the number of individuals observed at the site: ☒ None ☐ 1-10 ☐ 11-20 ☐ 20-50 ☐ greater than 50

c. Check the following that apply regarding the individuals proximity to the water body.
☐ Water in mouth or nose of the individual ☐ Primary touch: Individual's body (or portion) immersed in water
☐ Secondary touch: fishing, pets and related contact with water ☐ Individual is in a boat touching water
☐ Individual is on shore near water within 8 meters (25ft) of water ☐ Individual is well away from water between 8 and 30 meters (100 ft) ☒ Not applicable

2. If primary contact recreation activities are not observed, describe the physical characteristics of the water body that may hinder the frequency of primary contact (depth, etc.) (Attach photos, etc. for documentation).
Shallow, heavy vegetation in water and along banks,

3. Describe if there is public access (e.g. parks, roads, etc.) (Attach photos, maps, etc. for documentation).
bridge crossing.

4. Is an area with primary contact recreation activities or a bathing beach (e.g. state/local parks with swimming, etc.) located near (e.g. within 5 miles upstream and downstream) this site? NO

C. Secondary Contact Water Recreation Evaluation:
- Secondary contact recreation 1: Water recreation activities, such as fishing, commercial and recreational boating, and limited body contact incidental to shoreline activity, not involving a significant risk of water ingestion and that commonly occur.
- Secondary contact recreation 2: Water recreation activities, such as fishing, commercial and recreational boating, and limited body contact incidental to shoreline activity, not involving a significant risk of water ingestion but that occur less frequently than for secondary contact recreation 1 due to (1) physical characteristics of the water body and/or (2) limited public access.

1. Were water recreation activities observed at the site, but the nature of the recreation does not involve a significant risk of ingestion (e.g. secondary contact recreation activities)? ☐ Yes ☒ No secondary contact recreation activities were observed

a. Check the following boxes of secondary contact recreation activities that were observed at the time of the sampling event at the site (Attach photos of activities or lack of activities).
☐ Fishing
☐ Boating-commercial, recreational
☐ Non-whitewater-kayaking, rafting, canoeing
☒ No secondary contact recreation activities were observed
☐ Other secondary contact activities: _____

Field Data Sheets – Basic RUAA Survey

Stream Name: Caney Creek above tidal Site: 4
Date: 4/2/10 Time: 1335 - 1345

b. Check the number of individuals observed at the site.
X None ☐ 1-10 ☐ 11-20 ☐ 20-50 ☐ greater than 50

c. Check the following that apply regarding the individuals proximity to the water body.
☐ Secondary touch: fishing, pets and related contact with water ☐ In a boat touching water
☐ Body on shore near water within 8 meters (25ft) of water ☐ Body well away from water between 8 and 30 meters (100 ft)

2. If secondary contact recreation activities are not observed, describe the physical characteristics of the water body that may hinder the frequency of secondary contact (Attach photos, etc. for documentation).

Same as before

3. If secondary contact recreation activities are observed, how often do water recreational activities occur that do not involve a significant risk of water ingestion? ☐ frequently ☐ infrequently N/A
Please describe how often the activities occur? ☐ Unknown ☐ Never ☐ Daily ☐ Monthly ☐ Yearly

4. If infrequently, what is the reason? ☐ physical characteristics of the water body ☐ limited public access ☐ other
If other, list reasons: _____

5. Describe the physical characteristics of the water body that hinders the frequency of secondary contact recreation (depth, etc.) (Attach photos or depth measurements, etc. for documentation).

Same

6. Describe why there is limited public access (e.g. lack of roads, river or stream banks overgrown, etc.) (Attach photos, maps, etc. for documentation).

Same

D. Noncontact Recreation Evaluation

Noncontact recreation applies to water bodies where recreation activities do not involve a significant risk of water ingestion, and where primary and secondary contact recreation uses do not occur because of unsafe conditions, such as barge traffic.

1. Provide site-specific information and documentation (including photographs) regarding unsafe conditions, recreation activities, and presence or absence of water recreation activities.

Field Data Sheets – Basic RUAA Survey

Stream Name Caney Creek above tidal Site: 4
Date: 4/2/10 FDS Page 3 of 8 Time: 1335 -1345

E. Stream Channel and Substantial Pools
Please check the following which best describes the river or stream: X Wadeable ☐ Non-wadeable

1. Wadeable Streams
Determine whether or not the average depth at the thalweg is greater than 0.5 meters and if there are substantial pools with a depth of 1 meter or greater. Walk an approximately 300 meter reach (total) at the site and take the following measurements within the 300 meter reach. Measurements should be taken during base flow conditions (sustained or typical dry, warm-weather flows between rainfall events, excluding unusual antecedent conditions of drought or wet weather

Also, take photos facing upstream, downstream, left bank, and right bank at the 30 meters, 150 meters, and 300 meters.
Photos #s (30 meters) Upstream ✓ Downstream ✓ Left Bank ✓ Right Bank ✓ on upstream side
Photos #s (150 meters) Upstream____ Downstream ✓ Left Bank ____ Right Bank____ on road
Photos #s (300 meters) Upstream____ Downstream____ Left Bank ____ Right Bank____
↳ not reachable

a) Substantial pools - Measure the length of each pool (if > 10 pools only measure 10 pools), the width (at the widest point), and the deepest depth. A substantial pool is considered a pool greater than 10 meters in length for the purposes of a Basic RUAA Survey. If depth and/or width measurements were not attainable, explain why. N/A

	Length (meters)	Width (meters)	Depth (meters)
Pool 1			
Pool 2			
Pool 3			
Pool 4			
Pool 5			
Pool 6			
Pool 7			
Pool 8			
Pool 9			
Pool 10			

b)Average depth at the thalweg –Take depth measurements approximately every 30 meters to calculate an average depth at the thalweg (at least 10 measurements needed). If depth and/or width measurements were not attainable, explain why.

Distance	Depth (meters)	m	ft
30 meters		.58m	1.9 at pool ds of bridge
60 meters			
90 meters			
120 meters		.41m	1.36 at narrowest
150 meters			
180 meters			
210 meters			
240 meters			
270 meters			
300 meters			
Average		avg. 0.495m	

not reachable

Field Data Sheets – Basic RUAA Survey

Stream Name Caney Creek above tidal Site: 4
Date: 4/2/10 Time: 1335 -1345

c) Stream width - Measure (1) the width at one point which represents the typical average width of the 300 meter reach; (2) the width at the narrowest point of the stream within the 300 meter reach; and (3) the width at the widest point of the stream within the 300 meter reach.

Measurement Type	~~ft~~ Width (meters)	
Typical Average Width of 300 meter reach		
Width at narrowest point of the stream within 300 meter reach	9.5	2.896 m
Width at the widest point of the stream within 300 meter reach	22.1	6.736 m

d) Is there sufficient water within a 300 meter stream reach during base flow conditions to support primary contact recreation? ☐ Yes ☒ No
COMMENTS: too shallow and algae mats, stagnant water

2. Non-wadeable Streams N/A
If accessible, take 10 width measurements which represent typical widths of the 300 meter reach. If the water is too deep and not accessible record the estimated average width of the water body.

Also, take photos facing upstream, downstream, left bank, and right bank at .
Photos #s (30 meters) Upstream____ Downstream____ Left Bank ____ Right Bank____
Photos #s (150 meters) Upstream____ Downstream____ Left Bank ____ Right Bank____
Photos #s (300 meters) Upstream____ Downstream____ Left Bank ____ Right Bank____

# Measurements	Width (meters)
1	
2	
3	
4	
5	
6	
7	
8	
9	
10	

Field Data Sheets – Basic RUAA Survey

Stream Name Caney Creek above tidal Site: 4
Date: 4/2/10 Time: 1335 - 1345

F. Additional RUAA Information

1. Check the following activities observed over the site reach.

- ☐ Drinking or water in mouth
- ☐ Bathing
- ☐ Walking
- ☐ Jogging/running
- ☐ Bicycling
- ☐ Standing
- ☐ Sitting
- ☐ Lying down/sleeping
- ☐ Playing on shoreline
- ☐ Picnicking
- ☐ Motorcycle/ATV
- ☐ Hunting/Trapping
- ☐ Wildlife watching
- ☒ None
- ☐ Other: _____

2. Are there permanent or long-term hydrologic modifications that are constructed and operated in a way that affects the recreational uses? ☒ Yes ☐ No (If yes, please provide supporting documentation and photos.)
Comments: Culvert under bridge crossing

3. Check any channel obstructions that apply (Attach photos).

- ☒ Culverts
- ☐ Fences
- ☐ Log jams
- ☐ Rip rap
- ☐ Water control structure
- ☒ Barbed wire
- ☐ Dams
- ☐ Thick vegetation
- ☐ Low bridges
- ☐ None
- ☐ Utility pipe
- ☐ Other (specify): _____

fence across water upstream

4. Check all surrounding conditions that promote recreational activities (Attach photos of evidence or unusual items of interest).

- ☐ Campgrounds
- ☐ Playgrounds
- ☒ Rural area
- ☒ Residential
- ☐ National forests
- ☐ Urban/suburban location
- ☐ Golf Course
- ☐ Sports Field
- ☐ Stairs/walkway
- ☐ Boating access (ramps)
- ☐ Beach
- ☒ Bridge crossing
- ☐ Commercial boating
- ☐ Trails/paths (hiking/biking)
- ☐ Paved parking lot
- ☐ Unimproved parking lot
- ☒ Roads (paved/unpaved)
- ☐ Populated area
- ☐ Docks or rafts
- ☐ Commercial outfitter
- ☐ Nearby school
- ☐ Power Line Corridor
- ☐ Parks (national/city/county/state)
- ☐ Public Property
- ☐ Other: _____
- ☐ None of the Above

Comments: _____

5. Check all surrounding conditions that impede recreational activities (Attach photos of evidence or unusual items of interest).

- ☒ Private Property
- ☐ No trespass sign
- ☐ Wildlife
- ☐ Steep slopes
- ☐ No public access
- ☐ No roads
- ☒ Fence
- ☐ Barge/ship traffic
- ☐ Industrial
- ☐ None of the Above
- ☒ Other: bank vegetation

Comments: _____

6. Check any indications of human use (Attach photos).

- ☒ Roads
- ☐ Rope swings
- ☐ Dock/platform
- ☐ Foot paths/prints
- ☐ Other: _____
- ☐ RV/ATV Tracks
- ☐ Camping Sites
- ☐ Fire pit/ring
- ☐ Fishing Tackle
- ☐ NPDES Discharge
- ☐ Gates on corridor
- ☐ Children's toys
- ☐ Remnant's of Kid's play
- ☐ Organized event
- ☐ No Human Presence

Comments: _____

Field Data Sheets – Basic RUAA Survey

Stream Name Caney Creek above tidal Site: 4
Date: 4/12/10 Time: 1335 ~1345

7. Check all water characteristics that apply (Attach photos).
Aquatic Vegetation: ☐ absent ☐ rare ☐ common ☒ abundant
Algae Cover: ☐ absent ☐ rare ☐ common ☒ abundant
Odor: ☒ none ☐ rare ☐ common ☐ abundant
Color: ☐ clear ☒ green ☐ red ☐ brown ☐ black
Bottom Deposit: ☐ sludge ☐ solids ☒ fine sediments ☐ none ☐ other
Water Surface: ☐ clear ☒ scum ☐ foam ☐ debris ☐ oil
Other:
algae floats

8. Vertebrates Observed within 300 meter reach

Snakes	☒ None	☐ slight presence	☐ moderate presence	☐ large presence
Water Dependent Birds	☒ None	☐ slight presence	☐ moderate presence	☐ large presence
Alligators	☒ None	☐ slight presence	☐ moderate presence	☐ large presence

Comments:

9. Mammals Observed within 300 meter reach

Wild	☒ None	☐ slight presence	☐ moderate presence	☐ large presence
Domesticated Pets	☒ None	☐ slight presence	☐ moderate presence	☐ large presence
Livestock	☒ None	☐ slight presence	☐ moderate presence	☐ large presence
Feral Hogs	☒ None	☐ slight presence	☐ moderate presence	☐ large presence

Comments:

10. Evidence of wild animals or evidence of birds, cattle, hogs, etc.
☒ Tracks ☐ Fecal droppings ☐ Bird nests
Racoon Prints.

11. Garbage Observed

Large garbage in the channel	☒ None	☐ Rare	☐ Common	☐ Abundant
Small garbage in the channel	☐ None	☒ Rare	☐ Common	☐ Abundant
Bank Garbage	☐ None	☒ Rare	☐ Common	☐ Abundant

Briefly describe the kinds of garbage observed: beer cans, bucket, wrappers.

12. Is the site located in a wildlife preserve with large wildlife (i.e waterfowl) population? ☐ Yes ☒ No

13. Please document any other relevant information regarding recreational activities and the water body in general (for example, area outside of the stream reach evaluated).

Field Data Sheet - Basic RUAA Survey

Stream Flow (Discharge) Measurement

Stream: Caney Creek above tidal — Date: 04/02/10

Site: 4 — Site

Description: May Rd and CR 109 @ Caney Creek

Time Begin: 13:40 — Time End: ____ — Meter Type: Sontek Flowtracker

Observers: P. Lokanath, J. Wrast — Stream Width*: ____ — Section Width (W): 4.85 ft

Observations: Culvert width?

Section Midpoint (ft) (m)	Section Depth (ft) (m) (cm) (D)	Observational Depth** (ft)(m)	Velocity (V) At Point (ft/s)(m/s)	Velocity (V) Average (ft/s)(m/s)	Flow (Q) (m^3/s)(ft^3/s) Q = (W)(D)(V)
	1.80		-0.01 0.00 -0.00		0.00

Water looks stagnant

Avg. vel. = 0.003

beer cans

algae & worms in water

Flow is essentially 0.00 cfs

Field Data Sheets – Basic RUAA Survey

(should be completed for each site)

Data Collectors & Contact Information: P. Lockanath, J. Wrast, M. Shepard, O. Ramirez.	
Date & Time: 04/02/10 14:00-14:15	County Name: Wharton
Stream Name: Caney Creek above tidal	
Segment No. or nearest downstream Segment No.: 1305	
Description of Site: FM 2817 @ Caney Creek	

At any point during the Basic RUAA Survey it becomes apparent that primary contact recreation is clearly the use for the water body the investigator should stop conducting the UAA.

A. Stream Characteristics:

1. Check the following channel flow status that applies.
☐ dry ☐ no flow ☒ low ☐ normal ☐ high ☐ flooded

2. Check the following stream type that applies on the day of the survey:
☐ Ephemeral: A stream which flows only during or immediately after a rainfall event, and contains no refuge pools capable of sustaining a viable community of aquatic organisms.
☐ Intermittent: A stream which has a period of zero flow for at least one week during most years. Where flow records are available, a stream with a 7Q2 flow of less than 0.1 cubic feet per second is considered intermittent.
☐ Intermittent w/ perennial pools: An intermittent stream which maintains persistent pools even when flow in the stream is less than 0.1 cubic feet per second.
☒ Perennial: A stream which flows continuously throughout the year. Perennial streams have a 7Q2 equal to or greater than 0.1 cubic feet per second.
☐ Designated or unclassified tidal stream: A stream that is tidally influenced. If you checked this box, you will need to contact the Water Quality Standards Group and evaluate whether or not a bathing beach is located along the tidal stream and whether or not a bathing beach is located along the estuary, bay or Gulf water that the tidal stream flows into.

3. Streamflow
Use USGS gage data (if a gage is located at a site or within a quarter mile of a site) or use the Stream Flow (Discharge) Measurement Form and follow the procedures outlined in the most recent TCEQ Surface Water Quality Monitoring Procedures, Volume 1, RG-415. If USGS gage data is used for a site, include that information as an attachment and list the streamflow on the sampling date below. If the stream flow taken at one site is representative of the flow at another site(s), then that flow can be used as the observed flow and should be documented below. If the stream flow measured at one site is different from another site, then stream flow should be taken at both sites. ___ cfs

4. Water Quality Data (Field Parameters)
Field parameters should be collected in accordance with the procedures outlined in the most recent TCEQ Surface Water Quality Monitoring Procedures, Volume 1.
Air Temp 24 °C Water Temp 24 °C Secchi 0.54 m

5. Riparian Zone (Mark dominant categories with L (Left Bank) and R (Right Bank). Bank orientation is determined by the investigator facing downstream.)

___ Forest	___ Urban	___ Rip rap
L/R Shrub dominated corridor	___ Pasture	___ Concrete
___ Herbaceous marsh	___ Row crops	Other (specify): ___
L Mowed/maintained corridor	___ Denuded/Eroded bank	

6. Ease of bank access to the water body: ☒ Easy ☐ Moderately easy ☐ Moderately difficult ☐ Difficult

7. Please describe access opportunities or explain why the site is not easily accessible (Attach photos for documentation):
Bridge crossing, low slope along the banks but heavy vegetation, unable to access upstream - barbed wire fenced

8. Dominant Primary Substrate
☐ Cobble ☐ Sand ☐ Silt ☒ Mud/Clay ☐ Gravel ☐ Bedrock ☐ Rip rap ☒ Concrete

Q2 34 E KC
Q MS

Field Data Sheets – Basic RUAA Survey

Stream Name Caney Creek above tidal Site: 5
Date: 04/02/10 Time: 14:00

B. Primary Contact Water Recreation Evaluation:
- Primary contact recreation draft definition: Water recreation activities, such as wading by children, swimming, water skiing, diving, tubing, surfing, and whitewater kayaking, canoeing, and rafting, involving a significant risk of ingestion of water.

1. Were water recreation activities that involve a significant risk of ingestion (full body immersion) observed at this site?
☐ Yes ☒ No primary contact recreation activities were observed
a. Check the following boxes of primary contact recreation activities observed at the time of the sampling event at the site (Attach photos of the activities or lack of activities).

☐ Wading-Children ☐ Tubing ☒ No primary contact activities that commonly occur were observed
☐ Wading-Adults ☐ Surfing
☐ Swimming ☐ Whitewater-kayaking, canoeing, rafting
☐ Water skiing ☐ Other: _____
☐ Diving ☐ frequent public swimming-created by publicly owned land or commercial operations

b. Check the number of individuals observed at the site: ☒ None ☒ 1-10 ☐ 11-20 ☐ 20-50 ☐ greater than 50
KG 4/26/10

c. Check the following that apply regarding the individuals proximity to the water body.
☐ Water in mouth or nose of the individual ☐ Primary touch: Individual's body (or portion) immersed in water
☐ Secondary touch: fishing, pets and related contact with water ☐ Individual is in a boat touching water
☐ Individual is on shore near water within 8 meters (25ft) of water ☒ Individual is well away from water between 8 and 30 meters (100 ft) ☒ Not applicable

2. If primary contact recreation activities are not observed, describe the physical characteristics of the water body that may hinder the frequency of primary contact (depth, etc.) (Attach photos, etc. for documentation). Shallow water, thick bank vegetation, great amount of debris in water (pic)

3. Describe if there is public access (e.g. parks, roads, etc.) (Attach photos, maps, etc. for documentation).
bridge crossing

4. Is an area with primary contact recreation activities or a bathing beach (e.g. state/local parks with swimming, etc.) located near (e.g. within 5 miles upstream and downstream) this site? NO

C. Secondary Contact Water Recreation Evaluation:
- Secondary contact recreation 1: Water recreation activities, such as fishing, commercial and recreational boating, and limited body contact incidental to shoreline activity, not involving a significant risk of water ingestion and that commonly occur.
- Secondary contact recreation 2: Water recreation activities, such as fishing, commercial and recreational boating, and limited body contact incidental to shoreline activity, not involving a significant risk of water ingestion but that occur less frequently than for secondary contact recreation 1 due to (1) physical characteristics of the water body and/or (2) limited public access.

1. Were water recreation activities observed at the site, but the nature of the recreation does not involve a significant risk of ingestion (e.g. secondary contact recreation activities)? ☐ Yes ☐ No secondary contact recreation activities were observed
a. Check the following boxes of secondary contact recreation activities that were observed at the time of the sampling event at the site (Attach photos of activities or lack of activities).
☐ Fishing
☐ Boating-commercial, recreational
☐ Non-whitewater-kayaking, rafting, canoeing
☒ No secondary contact recreation activities were observed
☐ Other secondary contact activities: _____

Field Data Sheets – Basic RUAA Survey

Stream Name Caney Creek above tidal Site: 5
Date: 04/02/10 Time: 14:00

b. Check the number of individuals observed at the site.
_ None X 1-10 _ 11-20 _ 20-50 _ greater than 50

c. Check the following that apply regarding the individuals proximity to the water body.
☐ Secondary touch: fishing, pets and related contact with water ☐ In a boat touching water
☐ Body on shore near water within 8 meters (25ft) of water X Body well away from water between 8 and 30 meters (100 ft) working on car and mowing at house adj. to stream

2. If secondary contact recreation activities are not observed, describe the physical characteristics of the water body that may hinder the frequency of secondary contact (Attach photos, etc. for documentation).

Same

3. If secondary contact recreation activities are observed, how often do water recreational activities occur that do not involve a significant risk of water ingestion? _ frequently ☐ infrequently
Please describe how often the activities occur? X Unknown ☐ Never ☐ Daily ☐ Monthly ☐ Yearly

4. If infrequently, what is the reason? ☐ physical characteristics of the water body _ limited public access ☐ other
If other, list reasons: _____

5. Describe the physical characteristics of the water body that hinders the frequency of secondary contact recreation (depth, etc.) (Attach photos or depth measurements, etc. for documentation).

Same

6. Describe why there is limited public access (e.g. lack of roads, river or stream banks overgrown, etc.) (Attach photos, maps, etc. for documentation).

Same

D. Noncontact Recreation Evaluation

Noncontact recreation applies to water bodies where recreation activities do not involve a significant risk of water ingestion, and where primary and secondary contact recreation uses do not occur because of unsafe conditions, such as barge traffic.

1. Provide site-specific information and documentation (including photographs) regarding unsafe conditions, recreation activities, and presence or absence of water recreation activities.

Field Data Sheets – Basic RUAA Survey

Stream Name Caney Creek above tidal Site: 5
Date: 4/2/10 FDS Page 3 of 8 Time: 14:00

E. Stream Channel and Substantial Pools
Please check the following which best describes the river or stream: X Wadeable ☐ Non-wadeable

However, there was a fence impeding access upstream & heavy debris downstream

1. Wadeable Streams
Determine whether or not the average depth at the thalweg is greater than 0.5 meters and if there are substantial pools with a depth of 1 meter or greater. Walk an approximately 300 meter reach (total) at the site and take the following measurements within the 300 meter reach. Measurements should be taken during base flow conditions (sustained or typical dry, warm-weather flows between rainfall events, excluding unusual antecedent conditions of drought or wet weather

Also, take photos facing upstream, downstream, left bank, and right bank at the 30 meters, 150 meters, and 300 meters.
Photos #s (30 meters) Upstream____ Downstream____ Left Bank ____ Right Bank____
Photos #s (150 meters) Upstream ✓ Downstream ✓ Left Bank ✓ Right Bank ✓ photos taken @ bridge
Photos #s (300 meters) Upstream____ Downstream____ Left Bank ____ Right Bank____

a) Substantial pools - Measure the length of each pool (if > 10 pools only measure 10 pools), the width (at the widest point), and the deepest depth. A substantial pool is considered a pool greater than 10 meters in length for the purposes of a Basic RUAA Survey. If depth and/or width measurements were not attainable, explain why.

	Length (meters)	Width (meters)	Depth (meters)
Pool 1			
Pool 2			
Pool 3			
Pool 4			
Pool 5			
Pool 6			
Pool 7			
Pool 8			
Pool 9			
Pool 10			

b)Average depth at the thalweg –Take depth measurements approximately every 30 meters to calculate an average depth at the thalweg (at least 10 measurements needed). If depth and/or width measurements were not attainable, explain why.

Distance	Depth (meters)
30 meters	
60 meters	
90 meters	
120 meters	
150 meters	
180 meters	
210 meters	
240 meters	
270 meters	
300 meters	
Average	

Depth
0.45 ft → @ the bridge – width 20 ft 9 in
.137 m 27 ft

~~8.23 m~~ KC 4-12-10
~~6.37 m~~

FDS Page 4 of 8

Field Data Sheets – Basic RUAA Survey

Stream Name Caney Creek above tidal Site: 5
Date: 4/2/10 Time: 14:00

c) Stream width - Measure (1) the width at one point which represents the typical average width of the 300 meter reach; (2) the width at the narrowest point of the stream within the 300 meter reach; and (3) the width at the widest point of the stream within the 300 meter reach.

Measurement Type	Width (meters)	
Typical Average Width of 300 meter reach	27'	8.23 m
Width at narrowest point of the stream within 300 meter reach	20.9 ft	6.37 m
Width at the widest point of the stream within 300 meter reach		

d) Is there sufficient water within a 300 meter stream reach during base flow conditions to support primary contact recreation? X Yes ~~X~~ No
COMMENTS: too much debris to swim, and too shallow, but children could wade

2. Non-wadeable Streams
If accessible, take 10 width measurements which represent typical widths of the 300 meter reach. If the water is too deep and not accessible record the estimated average width of the water body.

Also, take photos facing upstream, downstream, left bank, and right bank at .
Photos #s (30 meters) Upstream____ Downstream____ Left Bank ____ Right Bank____
Photos #s (150 meters) Upstream____ Downstream____ Left Bank ____ Right Bank____
Photos #s (300 meters) Upstream____ Downstream____ Left Bank ____ Right Bank____

# Measurements	Width (meters)
1	
2	
3	
4	
5	
6	
7	
8	
9	
10	

Field Data Sheets – Basic RUAA Survey

Stream Name Caney Creek above tidal Site: 5
Date: 04/02/10 Time: 14:00

F. Additional RUAA Information

1. Check the following activities observed over the site reach.

- ☐ Drinking or water in mouth
- ☐ Bathing
- ☐ Walking
- ☐ Jogging/running
- ☐ Bicycling
- ☒ Standing
- ☐ Sitting
- ☐ Lying down/sleeping
- ☐ Playing on shoreline
- ☐ Picnicking
- ☐ Motorcycle/ATV
- ☐ Hunting/Trapping
- ☐ Wildlife watching
- ☐ None
- ☐ Other: _____

2. Are there permanent or long-term hydrologic modifications that are constructed and operated in a way that affects the recreational uses? ☒ Yes ☐ No (If yes, please provide supporting documentation and photos.)
Comments: Spran cement culverts under bridge

3. Check any channel obstructions that apply (Attach photos).

- ☒ Culverts
- ☒ Fences
- ☐ Log jams
- ☐ Rip rap
- ☐ Water control structure
- ☐ Barbed wire
- ☐ Dams
- ☐ Thick vegetation
- ☐ Low bridges
- ☐ None
- ☐ Utility pipe
- ☐ Other (specify): _____

4. Check all surrounding conditions that promote recreational activities (Attach photos of evidence or unusual items of interest).

- ☐ Campgrounds
- ☐ Playgrounds
- ☒ Rural area
- ☒ Residential
- ☐ National forests
- ☐ Urban/suburban location
- ☐ Golf Course
- ☐ Sports Field
- ☐ Stairs/walkway
- ☐ Boating access (ramps)
- ☐ Beach
- ☒ Bridge crossing
- ☐ Commercial boating
- ☐ Trails/paths (hiking/biking)
- ☐ Paved parking lot
- ☐ Unimproved parking lot
- ☒ Roads (paved/unpaved)
- ☐ Populated area
- ☐ Docks or rafts
- ☐ Commercial outfitter
- ☐ Nearby school
- ☐ Power Line Corridor
- ☐ Parks (national/city/county/state)
- ☐ Public Property
- ☐ Other: _____
- ☐ None of the Above

Comments: _____

5. Check all surrounding conditions that impede recreational activities (Attach photos of evidence or unusual items of interest).

- ☒ Private Property
- ☐ No trespass sign
- ☐ Wildlife
- ☐ Steep slopes
- ☐ No public access
- ☐ No roads
- ☒ Fence
- ☐ Barge/ship traffic
- ☐ Industrial
- ☐ None of the Above
- ☒ Other: debris in water way

Comments: _____

6. Check any indications of human use (Attach photos).

- ☒ Roads
- ☐ Rope swings
- ☐ Dock/platform
- ☐ Foot paths/prints
- ☐ Other: _____
- ☐ RV/ATV Tracks
- ☐ Camping Sites
- ☐ Fire pit/ring
- ☐ Fishing Tackle
- ☐ NPDES Discharge
- ☐ Gates on corridor
- ☐ Children's toys
- ☐ Remnant's of Kid's play
- ☐ Organized event
- ☐ No Human Presence

Comments: _____

Field Data Sheets – Basic RUAA Survey

Stream Name Caney Creek above tidal Site: 5
Date: 04/01/10 Time: 14:00

7. Check all water characteristics that apply (Attach photos).
Aquatic Vegetation: ☐ absent ☐ rare ☒ common ☐ abundant
Algae Cover: ☐ absent ☐ rare ☒ common ☐ abundant
Odor: ☒ none ☐ rare ☐ common ☐ abundant
Color: ☐ clear ☒ green ☐ red ☐ brown ☐ black
Bottom Deposit: ☐ sludge ☐ solids ☒ fine sediments ☐ none ☐ other
Water Surface: ☐ clear ☒ scum ☐ foam ☐ debris ☐ oil
Other:
↓ floating algae mats

8. Vertebrates Observed within 300 meter reach (1)

Snakes	☐ None	☒ slight presence	☐ moderate presence	☐ large presence
Water Dependent Birds	☒ None	☐ slight presence	☐ moderate presence	☐ large presence
Alligators	☒ None	☐ slight presence	☐ moderate presence	☐ large presence

Comments:

9. Mammals Observed within 300 meter reach

Wild	☒ None	☐ slight presence	☐ moderate presence	☐ large presence
Domesticated Pets	☒ None	☐ slight presence	☐ moderate presence	☐ large presence
Livestock	☐ None	☐ slight presence	☒ moderate presence	☐ large presence
Feral Hogs	☒ None	☐ slight presence	☐ moderate presence	☐ large presence

Comments: Cattle

10. Evidence of wild animals or evidence of birds, cattle, hogs, etc.
☒ Tracks ☐ Fecal droppings ☐ Bird nests
Raccoon

11. Garbage Observed

Large garbage in the channel	☒ None	☐ Rare	☐ Common	☐ Abundant
Small garbage in the channel	☐ None	☐ Rare	☒ Common	☐ Abundant
Bank Garbage	☐ None	☐ Rare	☒ Common	☐ Abundant

Briefly describe the kinds of garbage observed:
beer bottles, cans, bags.

12. Is the site located in a wildlife preserve with large wildlife (i.e waterfowl) population? ☐ Yes ☒ No

13. Please document any other relevant information regarding recreational activities and the water body in general (for example, area outside of the stream reach evaluated).

Field Data Sheet - Basic RUAA Survey
Stream Flow (Discharge) Measurement

Stream: Caney Creek above tidal Date:
Site: 5 Site
Description: FM 2817 @ Caney Creek
Time Begin: 1400 Time End: 1415 Meter Type: Sontek Flowtracker
Observers: Stream Width*: Section Width (W):
Observations:

Section Midpoint (ft) (m)	Section Depth (ft) (m) (cm) (D)	Observational Depth** (ft)(m)	Velocity (V)		Flow (Q) (m^3/s) (ft^3/s) Q = (W)(D)(V)
			At Point (ft/s)(m/s)	Average (ft/s)(m/s)	

No flow taken

Field Data Sheets – Basic RUAA Survey

(should be completed for each site)

Data Collectors & Contact Information: P. Lokanath, J. Weast, M. Shepard, D. Ramirez	
Date & Time: 4/2/10 14:38-14:55	County Name: Wharton
Stream Name: Caney Creek above tidal	
Segment No. or nearest downstream Segment No.: 1305	
Description of Site: FM 1096 @ Caney Creek	

At any point during the Basic RUAA Survey it becomes apparent that primary contact recreation is clearly the use for the water body the investigator should stop conducting the UAA.

A. Stream Characteristics:

1. Check the following channel flow status that applies.
☐ dry ☐ no flow ☐ low ☒ normal ☐ high ☐ flooded

2. Check the following stream type that applies on the day of the survey:
☐ Ephemeral: A stream which flows only during or immediately after a rainfall event, and contains no refuge pools capable of sustaining a viable community of aquatic organisms.
☐ Intermittent: A stream which has a period of zero flow for at least one week during most years. Where flow records are available, a stream with a 7Q2 flow of less than 0.1 cubic feet per second is considered intermittent.
☐ Intermittent w/ perennial pools: An intermittent stream which maintains persistent pools even when flow in the stream is less than 0.1 cubic feet per second.
☒ Perennial: A stream which flows continuously throughout the year. Perennial streams have a 7Q2 equal to or greater than 0.1 cubic feet per second.
☐ Designated or unclassified tidal stream: A stream that is tidally influenced. If you checked this box, you will need to contact the Water Quality Standards Group and evaluate whether or not a bathing beach is located along the tidal stream and whether or not a bathing beach is located along the estuary, bay or Gulf water that the tidal stream flows into.

3. Streamflow
Use USGS gage data (if a gage is located at a site or within a quarter mile of a site) or use the Stream Flow (Discharge) Measurement Form and follow the procedures outlined in the most recent TCEQ Surface Water Quality Monitoring Procedures, Volume 1, RG-415. If USGS gage data is used for a site, include that information as an attachment and list the streamflow on the sampling date below. If the stream flow taken at one site is representative of the flow at another site(s), then that flow can be used as the observed flow and should be documented below. If the stream flow measured at one site is different from another site, then stream flow should be taken at both sites. ~~-0.570~~ cfs ~~-0.711 cfs~~ OK
OK -0.570

4. Water Quality Data (Field Parameters)
Field parameters should be collected in accordance with the procedures outlined in the most recent TCEQ Surface Water Quality Monitoring Procedures, Volume 1.
Air Temp 24 °C Water Temp 24 °C Secchi 0.64 m

5. Riparian Zone (Mark dominant categories with L (Left Bank) and R (Right Bank). Bank orientation is determined by the investigator facing downstream.)

____ Forest	____ Urban	____ Rip rap
____ Shrub dominated corridor	Upstream R Pasture	____ Concrete
____ Herbaceous marsh	____ Row crops	Other (specify): ____
L/R Mowed/maintained corridor	____ Denuded/Eroded bank	

6. Ease of bank access to the water body: ☒ Easy ☐ Moderately easy ☒ Moderately difficult ☐ Difficult
Downstream upstream

7. Please describe access opportunities or explain why the site is not easily accessible (Attach photos for documentation):
Upstream barbwire fenced, heavy vegetation along the bank

8. Dominant Primary Substrate
☐ Cobble ☐ Sand ☐ Silt ☒ Mud/Clay ☐ Gravel ☐ Bedrock ☐ Rip rap ☐ Concrete

E KL

Field Data Sheets – Basic RUAA Survey

Stream Name Caney Creek above tidal Site: 6
Date: 4/12/10 Time: 1450

B. Primary Contact Water Recreation Evaluation:
- Primary contact recreation draft definition: Water recreation activities, such as wading by children, swimming, water skiing, diving, tubing, surfing, and whitewater kayaking, canoeing, and rafting, involving a significant risk of ingestion of water.

1. Were water recreation activities that involve a significant risk of ingestion (full body immersion) observed at this site?
☐ Yes ☒ No primary contact recreation activities were observed
a. Check the following boxes of primary contact recreation activities observed at the time of the sampling event at the site (Attach photos of the activities or lack of activities).

☐ Wading-Children ☐ Tubing ☒ No primary contact activities that commonly occur were observed
☐ Wading-Adults ☐ Surfing
☐ Swimming ☐ Whitewater-kayaking, canoeing, rafting
☐ Water skiing ☐ Other: _____
☐ Diving ☐ frequent public swimming-created by publicly owned land or commercial operations

b. Check the number of individuals observed at the site: ☒ None ☐ 1-10 ☐ 11-20 ☐ 20-50 ☐ greater than 50

c. Check the following that apply regarding the individuals proximity to the water body.
☐ Water in mouth or nose of the individual ☐ Primary touch: Individual's body (or portion) immersed in water
☐ Secondary touch: fishing, pets and related contact with water ☐ Individual is in a boat touching water
☐ Individual is on shore near water within 8 meters (25ft) of water ☐ Individual is well away from water between 8 and 30 meters (100 ft) ☒ Not applicable

2. If primary contact recreation activities are not observed, describe the physical characteristics of the water body that may hinder the frequency of primary contact (depth, etc.) (Attach photos, etc. for documentation).
Too shallow, lot of vegetation in water, wired fence upstream, upstream - lot of vegetation along the bank.

3. Describe if there is public access (e.g. parks, roads, etc.) (Attach photos, maps, etc. for documentation).
Road and bridge crossing

4. Is an area with primary contact recreation activities or a bathing beach (e.g. state/local parks with swimming, etc.) located near (e.g. within 5 miles upstream and downstream) this site? NO

C. Secondary Contact Water Recreation Evaluation:
- Secondary contact recreation 1: Water recreation activities, such as fishing, commercial and recreational boating, and limited body contact incidental to shoreline activity, not involving a significant risk of water ingestion and that commonly occur.
- Secondary contact recreation 2: Water recreation activities, such as fishing, commercial and recreational boating, and limited body contact incidental to shoreline activity, not involving a significant risk of water ingestion but that occur less frequently than for secondary contact recreation 1 due to (1) physical characteristics of the water body and/or (2) limited public access.

1. Were water recreation activities observed at the site, but the nature of the recreation does not involve a significant risk of ingestion (e.g. secondary contact recreation activities)? ☐ Yes ☒ No secondary contact recreation activities were observed
a. Check the following boxes of secondary contact recreation activities that were observed at the time of the sampling event at the site (Attach photos of activities or lack of activities).
☐ Fishing
☐ Boating-commercial, recreational
☐ Non-whitewater-kayaking, rafting, canoeing
☒ No secondary contact recreation activities were observed
☐ Other secondary contact activities: _____

Field Data Sheets – Basic RUAA Survey

Stream Name Caney Creek above tidal Site: 6
Date: 4/2/10 Time: 1450

b. Check the number of individuals observed at the site.
X None ☐ 1-10 ☐ 11-20 ☐ 20-50 ☐ greater than 50

c. Check the following that apply regarding the individuals proximity to the water body.
☐ Secondary touch: fishing, pets and related contact with water ☐ In a boat touching water
☐ Body on shore near water within 8 meters (25ft) of water ☐ Body well away from water between 8 and 30 meters (100 ft) NA

2. If secondary contact recreation activities are not observed, describe the physical characteristics of the water body that may hinder the frequency of secondary contact (Attach photos, etc. for documentation).

Same as before

3. If secondary contact recreation activities are observed, how often do water recreational activities occur that do not involve a significant risk of water ingestion? ☐ frequently ☐ infrequently NA
Please describe how often the activities occur? ☐ Unknown ☐ Never ☐ Daily ☐ Monthly ☐ Yearly

4. If infrequently, what is the reason? ☐ physical characteristics of the water body ☐ limited public access ☐ other
If other, list reasons: _____

5. Describe the physical characteristics of the water body that hinders the frequency of secondary contact recreation (depth, etc.) (Attach photos or depth measurements, etc. for documentation).

Same as before.

6. Describe why there is limited public access (e.g. lack of roads, river or stream banks overgrown, etc.) (Attach photos, maps, etc. for documentation).

Same as before.

D. Noncontact Recreation Evaluation
Noncontact recreation applies to water bodies where recreation activities do not involve a significant risk of water ingestion, and where primary and secondary contact recreation uses do not occur because of unsafe conditions, such as barge traffic.

1. Provide site-specific information and documentation (including photographs) regarding unsafe conditions, recreation activities, and presence or absence of water recreation activities.

Field Data Sheets – Basic RUAA Survey

Stream Name Caney Creek above tidal Site: 6
Date: 4/2/10 FDS Page 3 of 8 Time: 1438 - 1455

E. Stream Channel and Substantial Pools
Please check the following which best describes the river or stream: X Wadeable ☐ Non-wadeable

1. Wadeable Streams
Determine whether or not the average depth at the thalweg is greater than 0.5 meters and if there are substantial pools with a depth of 1 meter or greater. Walk an approximately 300 meter reach (total) at the site and take the following measurements within the 300 meter reach. Measurements should be taken during base flow conditions (sustained or typical dry, warm-weather flows between rainfall events, excluding unusual antecedent conditions of drought or wet weather

Also, take photos facing upstream, downstream, left bank, and right bank at the 30 meters, 150 meters, and 300 meters.
Photos #s (30 meters) Upstream ✓ Downstream ✓ Left Bank ✓ Right Bank ✓
Photos #s (150 meters) Upstream ✓ Downstream ✓ Left Bank ✓ Right Bank ✓
Photos #s (300 meters) Upstream____ Downstream____ Left Bank ____ Right Bank____

a) Substantial pools - Measure the length of each pool (if > 10 pools only measure 10 pools), the width (at the widest point), and the deepest depth. A substantial pool is considered a pool greater than 10 meters in length for the purposes of a Basic RUAA Survey. If depth and/or width measurements were not attainable, explain why.
N/A

	Length (meters)	Width (meters)	Depth (meters)
Pool 1			
Pool 2			
Pool 3			
Pool 4			
Pool 5			
Pool 6			
Pool 7			
Pool 8			
Pool 9			
Pool 10			

b)Average depth at the thalweg –Take depth measurements approximately every 30 meters to calculate an average depth at the thalweg (at least 10 measurements needed). If depth and/or width measurements were not attainable, explain why.

Distance	~~ft~~ Depth (meters)	
30 meters	1.2	.366 m
60 meters	1.66	.506 m
90 meters	1.1	.335 m
120 meters	1.8	.549 m
150 meters	1.64	.499 m
180 meters	1.8	.549 m
210 meters	1.8	.549 m
240 meters	1.7	.518 m
270 meters	1.78	.543 m
300 meters	2.0	.61 m
Average		.448 m

Field Data Sheets – Basic RUAA Survey

Stream Name Caney Creek above tidal Site: 6
Date: 4/2/10 Time: 1438-1455

c) Stream width - Measure (1) the width at one point which represents the typical average width of the 300 meter reach; (2) the width at the narrowest point of the stream within the 300 meter reach; and (3) the width at the widest point of the stream within the 300 meter reach.

Measurement Type	Width (meters)
Typical Average Width of 300 meter reach	28 ft 8.534m at culvert
Width at narrowest point of the stream within 300 meter reach	5 ft 1.52 m
Width at the widest point of the stream within 300 meter reach	~~25 m~~ 34 m

MES 2/4

d) Is there sufficient water within a 300 meter stream reach during base flow conditions to support primary contact recreation? ☐ Yes ☒ No
COMMENTS:

2. Non-wadeable Streams N/A
If accessible, take 10 width measurements which represent typical widths of the 300 meter reach. If the water is too deep and not accessible record the estimated average width of the water body.

Also, take photos facing upstream, downstream, left bank, and right bank at .
Photos #s (30 meters) Upstream____ Downstream____ Left Bank ____ Right Bank____
Photos #s (150 meters) Upstream____ Downstream____ Left Bank ____ Right Bank____
Photos #s (300 meters) Upstream____ Downstream____ Left Bank ____ Right Bank____

# Measurements	Width (meters)
1	
2	
3	
4	
5	
6	
7	
8	
9	
10	

Field Data Sheets – Basic RUAA Survey

Stream Name Caney Creek above tidal Site: 6
Date: 4/2/10 Time: 1450

F. Additional RUAA Information

1. Check the following activities observed over the site reach.

- ☐ Drinking or water in mouth
- ☐ Bathing
- ☐ Walking
- ☐ Jogging/running
- ☐ Bicycling
- ☐ Standing
- ☐ Sitting
- ☐ Lying down/sleeping
- ☐ Playing on shoreline
- ☐ Picnicking
- ☐ Motorcycle/ATV
- ☐ Hunting/Trapping
- ☐ Wildlife watching
- ☒ None
- ☐ Other: _____

2. Are there permanent or long-term hydrologic modifications that are constructed and operated in a way that affects the recreational uses? ☒ Yes ☐ No (If yes, please provide supporting documentation and photos.)
Comments: _____

3. Check any channel obstructions that apply (Attach photos).

- ☒ Culverts
- ☐ Fences
- ☒ Log jams
- ☐ Rip rap
- ☐ Water control structure
- ☒ Barbed wire
- ☐ Dams
- ☒ Thick vegetation
- ☐ Low bridges
- ☐ None
- ☐ Utility pipe
- ☐ Other (specify): _____

4. Check all surrounding conditions that promote recreational activities (Attach photos of evidence or unusual items of interest).

- ☐ Campgrounds
- ☐ Playgrounds
- ☐ Rural area
- ☒ Residential
- ☐ National forests
- ☐ Urban/suburban location
- ☐ Golf Course
- ☐ Sports Field
- ☐ Stairs/walkway
- ☐ Boating access (ramps)
- ☐ Beach
- ☒ Bridge crossing
- ☐ Commercial boating
- ☐ Trails/paths (hiking/biking)
- ☐ Paved parking lot
- ☐ Unimproved parking lot
- ☒ Roads (paved/unpaved)
- ☐ Populated area
- ☐ Docks or rafts
- ☐ Commercial outfitter
- ☐ Nearby school
- ☐ Power Line Corridor
- ☐ Parks (national/city/county/state)
- ☐ Public Property
- ☐ Other: _____
- ☐ None of the Above

Comments: _____

5. Check all surrounding conditions that impede recreational activities (Attach photos of evidence or unusual items of interest).

- ☒ Private Property
- ☐ No trespass sign
- ☐ Wildlife
- ☐ Steep slopes
- ☐ No public access
- ☐ No roads
- ☒ Fence
- ☐ Barge/ship traffic
- ☐ Industrial
- ☐ None of the Above
- ☐ Other: _____

Comments: _____

6. Check any indications of human use (Attach photos).

- ☒ Roads
- ☐ Rope swings
- ☐ Dock/platform
- ☐ Foot paths/prints
- ☐ Other: _____
- ☐ RV/ATV Tracks
- ☐ Camping Sites
- ☐ Fire pit/ring
- ☐ Fishing Tackle
- ☐ NPDES Discharge
- ☐ Gates on corridor
- ☐ Children's toys
- ☐ Remnant's of Kid's play
- ☐ Organized event
- ☐ No Human Presence

Comments: _____

Field Data Sheets – Basic RUAA Survey

Stream Name Caney Creek above tidal Site: 6
Date: 4/2/10 Time: 1450

7. Check all water characteristics that apply (Attach photos).
Aquatic Vegetation: ☐ absent ☐ rare ☒ common ☐ abundant
Algae Cover: ☐ absent ☒ rare ☐ common ☐ abundant
Odor: ☒ none ☐ rare ☐ common ☐ abundant
Color: ☐ clear ☒ green ☐ red ☐ brown ☐ black
Bottom Deposit: ☐ sludge ☐ solids ☒ fine sediments ☐ none ☐ other
Water Surface: ☒ clear ☐ scum ☐ foam ☐ debris ☐ oil
Other:
There was a lot of emergent vegetation.

8. Vertebrates Observed within 300 meter reach

Snakes	☒ None	☐ slight presence	☐ moderate presence	☐ large presence
Water Dependent Birds	☐ None	☒ slight presence	☐ moderate presence	☐ large presence
Alligators	☒ None	☐ slight presence	☐ moderate presence	☐ large presence

Comments:

9. Mammals Observed within 300 meter reach

Wild	☒ None	☐ slight presence	☐ moderate presence	☐ large presence
Domesticated Pets	☐ None	☒ slight presence	☐ moderate presence	☐ large presence
Livestock	☒ None	☐ slight presence	☒ moderate presence	☐ large presence
Feral Hogs	☒ None	☐ slight presence	☐ moderate presence	☐ large presence

Comments:

10. Evidence of wild animals or evidence of birds, cattle, hogs, etc.
☒ Tracks ☐ Fecal droppings ☐ Bird nests

11. Garbage Observed

Large garbage in the channel	☐ None	☒ Rare	☐ Common	☐ Abundant
Small garbage in the channel	☐ None	☒ Rare	☐ Common	☐ Abundant
Bank Garbage	☐ None	☒ Rare	☐ Common	☐ Abundant

Briefly describe the kinds of garbage observed: Styrofoam cups

12. Is the site located in a wildlife preserve with large wildlife (i.e waterfowl) population? ☐ Yes ☒ No

13. Please document any other relevant information regarding recreational activities and the water body in general (for example, area outside of the stream reach evaluated).

Another fence downstream immediately after 300m mark

Field Data Sheet - Basic RUAA Survey
Stream Flow (Discharge) Measurement

Stream: Caney Creek above tidal Date: 4/12/10
Site: 6 Site
Description: FM 1096 @ Caney Creek
Time Begin: 14:40 Time End: 14:55 Meter Type: Sontek Flowtracker
Observers: P. Lokanath, J. Wrast Stream Width*: 28 Section Width (W): 2.8
Observations:

Section Midpoint (ft) (m)	Section Depth (ft) (m) (cm) (D)	Observational Depth** (ft)(m)	Velocity (V) At Point (ft/s)(m/s)	Velocity (V) Average (ft/s)(m/s)	Flow (Q) (m^3/s)(ft^3/s) Q = (W)(D)(V)	Flow ft^3/s
					KC 10/27/10	
1.4	2.3			~~0~~ -0.1	~~0.1~~	-0.644
4.2	2.3			0.00	~~0.00~~	0.000
7.0	2.3			-0.03	~~-0.03~~	-0.193
9.8	2.25			0.02	~~0.02~~	0.126
12.6	2.25			0.02	~~0.02~~	0.126
15.4	2.25			0.02	~~0.02~~	0.126
18.2	2.00			-0.02	~~-0.02~~	-0.112
21	2.05			0.01	~~0.01~~	0.057
23.8	2.05			0.00	~~0.00~~	0.000
26.6	2.00			-0.10	~~-0.10~~	-0.056

Slight wind blowing countercurrent

KC 10/27/10
Q = ~~-0.711~~ cfs
-0.570

E MES 5/18

Field Data Sheets – Basic RUAA Survey

(should be completed for each site)

Data Collectors & Contact Information:	P. Lo Kenneth, C. Gauthier, M. Beauks, M. Shepard
Date & Time: 04/03/10 9:45-10:40	County Name: Wharton
Stream Name: Caney Creek above tidal	
Segment No. or nearest downstream Segment No.:	1305
Description of Site:	Railroad St @ Caney Creek

At any point during the Basic RUAA Survey it becomes apparent that primary contact recreation is clearly the use for the water body the investigator should stop conducting the UAA.

A. Stream Characteristics:

1. Check the following channel flow status that applies.

☐ dry ☐ no flow ☐ low ☒ normal ☐ high ☐ flooded

2. Check the following stream type that applies on the day of the survey:

☐ Ephemeral: A stream which flows only during or immediately after a rainfall event, and contains no refuge pools capable of sustaining a viable community of aquatic organisms.

☐ Intermittent: A stream which has a period of zero flow for at least one week during most years. Where flow records are available, a stream with a 7Q2 flow of less than 0.1 cubic feet per second is considered intermittent.

☐ Intermittent w/ perennial pools: An intermittent stream which maintains persistent pools even when flow in the stream is less than 0.1 cubic feet per second.

☒ Perennial: A stream which flows continuously throughout the year. Perennial streams have a 7Q2 equal to or greater than 0.1 cubic feet per second.

☐ Designated or unclassified tidal stream: A stream that is tidally influenced. If you checked this box, you will need to contact the Water Quality Standards Group and evaluate whether or not a bathing beach is located along the tidal stream and whether or not a bathing beach is located along the estuary, bay or Gulf water that the tidal stream flows into.

3. Streamflow

Use USGS gage data (if a gage is located at a site or within a quarter mile of a site) or use the Stream Flow (Discharge) Measurement Form and follow the procedures outlined in the most recent TCEQ Surface Water Quality Monitoring Procedures, Volume 1, RG-415. If USGS gage data is used for a site, include that information as an attachment and list the streamflow on the sampling date below. If the stream flow taken at one site is representative of the flow at another site(s), then that flow can be used as the observed flow and should be documented below. If the stream flow measured at one site is different from another site, then stream flow should be taken at both sites. ~~0.343~~ cfs velocity measurements taken @ culverts -0.289 cfs

4. Water Quality Data (Field Parameters) ~~0.375~~

Field parameters should be collected in accordance with the procedures outlined in the most recent TCEQ Surface Water Quality Monitoring Procedures, Volume 1.

Air Temp 24.5 °C Water Temp 21 °C Secchi 1.10 m

5. Riparian Zone (Mark dominant categories with L (Left Bank) and R (Right Bank). Bank orientation is determined by the investigator facing downstream.)

____ Forest	____ Urban	____ Rip rap
R/L Shrub dominated corridor	____ Pasture	____ Concrete
____ Herbaceous marsh	____ Row crops	Other (specify): ____
____ Mowed/maintained corridor	____ Denuded/Eroded bank	

6. Ease of bank access to the water body: ☐ Easy ☒ Moderately easy ☐ Moderately difficult ☐ Difficult

7. Please describe access opportunities or explain why the site is not easily accessible (Attach photos for documentation):

there is a Road and bridge, ~~[illegible]~~ lot of vegetation along the bank

8. Dominant Primary Substrate

☐ Cobble ☐ Sand ☒ Silt ☒ Mud/Clay ☐ Gravel ☐ Bedrock ☐ Rip rap ☐ Concrete

Q2 OAR QKC EPL

Field Data Sheets – Basic RUAA Survey

Stream Name Caney Creek above tidal Site: 7
Date: 04/03/10 Time: 09:45

B. Primary Contact Water Recreation Evaluation:
- Primary contact recreation draft definition: Water recreation activities, such as wading by children, swimming, water skiing, diving, tubing, surfing, and whitewater kayaking, canoeing, and rafting, involving a significant risk of ingestion of water.

1. Were water recreation activities that involve a significant risk of ingestion (full body immersion) observed at this site?
☐ Yes ☒ No primary contact recreation activities were observed
a. Check the following boxes of primary contact recreation activities observed at the time of the sampling event at the site (Attach photos of the activities or lack of activities).

☐ Wading-Children	☐ Tubing	☒ No primary contact activities that commonly occur were observed
☐ Wading-Adults	☐ Surfing	
☐ Swimming	☐ Whitewater-kayaking, canoeing, rafting	
☐ Water skiing	☐ Other: _____	
☐ Diving	☐ frequent public swimming-created by publicly owned land or commercial operations	

b. Check the number of individuals observed at the site: ~~☒ None~~ ☒ 1-10 ☐ 11-20 ☐ 20-50 ☐ greater than 50
KC 4/26/10

c. Check the following that apply regarding the individuals proximity to the water body.
☐ Water in mouth or nose of the individual ☐ Primary touch: Individual's body (or portion) immersed in water
☐ Secondary touch: fishing, pets and related contact with water ☐ Individual is in a boat touching water
☐ Individual is on shore near water within 8 meters (25ft) of water ☒ Individual is well away from water between 8 and 30 meters (100 ft) ~~☒ Not~~ applicable
KC 4/26/10

2. If primary contact recreation activities are not observed, describe the physical characteristics of the water body that may hinder the frequency of primary contact (depth, etc.) (Attach photos, etc. for documentation).
Heavy vegetation, lot of debris, lot of worms in water

3. Describe if there is public access (e.g. parks, roads, etc.) (Attach photos, maps, etc. for documentation).
Road, bridge crossing

4. Is an area with primary contact recreation activities or a bathing beach (e.g. state/local parks with swimming, etc.) located near (e.g. within 5 miles upstream and downstream) this site? NO

C. Secondary Contact Water Recreation Evaluation:
- Secondary contact recreation 1: Water recreation activities, such as fishing, commercial and recreational boating, and limited body contact incidental to shoreline activity, not involving a significant risk of water ingestion and that commonly occur.
- Secondary contact recreation 2: Water recreation activities, such as fishing, commercial and recreational boating, and limited body contact incidental to shoreline activity, not involving a significant risk of water ingestion but that occur less frequently than for secondary contact recreation 1 due to (1) physical characteristics of the water body and/or (2) limited public access.

1. Were water recreation activities observed at the site, but the nature of the recreation does not involve a significant risk of ingestion (e.g. secondary contact recreation activities)? ☐ Yes ☒ No secondary contact recreation activities were observed
a. Check the following boxes of secondary contact recreation activities that were observed at the time of the sampling event at the site (Attach photos of activities or lack of activities).
☐ Fishing
☐ Boating-commercial, recreational
☐ Non-whitewater-kayaking, rafting, canoeing
☒ No secondary contact recreation activities were observed
☐ Other secondary contact activities: _____

Field Data Sheets – Basic RUAA Survey

Stream Name Caney Creek above tidal Site: 7
Date: 04/03/10 Time: 09:45

b. Check the number of individuals observed at the site.
☐ None ☒ 1-10 ☐ 11-20 ☐ 20-50 ☐ greater than 50

c. Check the following that apply regarding the individuals proximity to the water body.
☐ Secondary touch: fishing, pets and related contact with water ☐ In a boat touching water
☐ Body on shore near water within 8 meters (25ft) of water ☒ Body well away from water between 8 and 30 meters (100 ft) house about 200m from the segment, a person parking his car

2. If secondary contact recreation activities are not observed, describe the physical characteristics of the water body that may hinder the frequency of secondary contact (Attach photos, etc. for documentation).

Same as before

3. If secondary contact recreation activities are observed, how often do water recreational activities occur that do not involve a significant risk of water ingestion? ☐ frequently ☐ infrequently NA
Please describe how often the activities occur? ☐ Unknown ☐ Never ☐ Daily ☐ Monthly ☐ Yearly

4. If infrequently, what is the reason? ☐ physical characteristics of the water body ☐ limited public access ☐ other
If other, list reasons: _____

5. Describe the physical characteristics of the water body that hinders the frequency of secondary contact recreation (depth, etc.) (Attach photos or depth measurements, etc. for documentation).

Same as before

6. Describe why there is limited public access (e.g. lack of roads, river or stream banks overgrown, etc.) (Attach photos, maps, etc. for documentation).

Overgrown banks

D. Noncontact Recreation Evaluation

Noncontact recreation applies to water bodies where recreation activities do not involve a significant risk of water ingestion, and where primary and secondary contact recreation uses do not occur because of unsafe conditions, such as barge traffic.

1. Provide site-specific information and documentation (including photographs) regarding unsafe conditions, recreation activities, and presence or absence of water recreation activities.

Field Data Sheets – Basic RUAA Survey

Stream Name Caney Creek above tidal Site: 7
Date: 4-3-2010 FDS Page 3 of 8 Time: 09:45

E. Stream Channel and Substantial Pools
Please check the following which best describes the river or stream: ☑ Wadeable ☐ Non-wadeable

1. Wadeable Streams
Determine whether or not the average depth at the thalweg is greater than 0.5 meters and if there are substantial pools with a depth of 1 meter or greater. Walk an approximately 300 meter reach (total) at the site and take the following measurements within the 300 meter reach. Measurements should be taken during base flow conditions (sustained or typical dry, warm-weather flows between rainfall events, excluding unusual antecedent conditions of drought or wet weather

Also, take photos facing upstream, downstream, left bank, and right bank at the 30 meters, 150 meters, and 300 meters.
Photos #s ~~(30~~ 25 meters) Upstream ✓ Downstream ✓ Left Bank ✓ Right Bank ✓
bridge Photos #s (1~~50 meters)~~ Upstream ✓ Downstream ✓ Left Bank ✓ Right Bank ✓
Photos #s (300 meters) Upstream____ Downstream____ Left Bank ____ Right Bank____

N/A a) Substantial pools - Measure the length of each pool (if > 10 pools only measure 10 pools), the width (at the widest point), and the deepest depth. A substantial pool is considered a pool greater than 10 meters in length for the purposes of a Basic RUAA Survey. If depth and/or width measurements were not attainable, explain why.

	Length (meters)	Width (meters)	Depth (meters)
Pool 1			
Pool 2			
Pool 3			
Pool 4			
Pool 5			
Pool 6			
Pool 7			
Pool 8			
Pool 9			
Pool 10			

b)Average depth at the thalweg –Take depth measurements approximately every 30 meters to calculate an average depth at the thalweg (at least 10 measurements needed). If depth and/or width measurements were not attainable, explain why.

	Distance	Depth (meters)		
25	~~30~~ meters upstream of bridge	2.44 ft	.744 m	upstream of bride
15	~~60~~ meters " "	2.42 ft	.738 m	
2	~~90~~ meters " "	3.04 ft	.927 m	
	~~120~~ meters	2.8 ft	.853 m	bridge
14	~~150~~ meters	3.0 ft	.914 m	downstream of bridge
	180 meters			
	210 meters			
	240 meters			
	270 meters			
	300 meters			
	Average		.835 m	

Field Data Sheets – Basic RUAA Survey

Stream Name Caney Creek above tidal Site: 7
Date: 4/3/10 Time: 09:45

c) Stream width - Measure (1) the width at one point which represents the typical average width of the 300 meter reach; (2) the width at the narrowest point of the stream within the 300 meter reach; and (3) the width at the widest point of the stream within the 300 meter reach.

Measurement Type	Width (meters)
Typical Average Width of 300 meter reach	~~23m~~ 20.2 m
Width at narrowest point of the stream within 300 meter reach	15.2 ft. 4.63 m culvert width
Width at the widest point of the stream within 300 meter reach	23 m

d) Is there sufficient water within a 300 meter stream reach during base flow conditions to support primary contact recreation? ☑ Yes ☐ No

COMMENTS:
the stream is deep enough but there is a lot of debris and trash — hard to walk through.

2. Non-wadeable Streams N/A
If accessible, take 10 width measurements which represent typical widths of the 300 meter reach. If the water is too deep and not accessible record the estimated average width of the water body.

Also, take photos facing upstream, downstream, left bank, and right bank at .
Photos #s (30 meters) Upstream____ Downstream____ Left Bank ____ Right Bank____
Photos #s (150 meters) Upstream____ Downstream____ Left Bank ____ Right Bank____
Photos #s (300 meters) Upstream____ Downstream____ Left Bank ____ Right Bank____

# Measurements	Width (meters)
1	
2	
3	
4	
5	
6	
7	
8	
9	
10	

Field Data Sheets – Basic RUAA Survey

Stream Name Caney Creek above tidal Site: 7
Date: 04/03/10 Time: 09:45

F. Additional RUAA Information

1. Check the following activities observed over the site reach.

- ☐ Drinking or water in mouth
- ☐ Bathing
- ☐ Walking
- ☐ Jogging/running
- ☐ Bicycling
- ☐ Standing
- ☐ Sitting
- ☐ Lying down/sleeping
- ☐ Playing on shoreline
- ☐ Picnicking
- ☐ Motorcycle/ATV
- ☐ Hunting/Trapping
- ☐ Wildlife watching
- ☒ None
- ☐ Other: _____

2. Are there permanent or long-term hydrologic modifications that are constructed and operated in a way that affects the recreational uses? ☒ Yes ☐ No (If yes, please provide supporting documentation and photos.)
Comments: _____

3. Check any channel obstructions that apply (Attach photos).

- ☒ Culverts
- ☐ Barbed wire
- ☐ Utility pipe
- ☐ Fences
- ☐ Dams
- ☒ Other (specify): Debris
- ☒ Log jams
- ☒ Thick vegetation
- ☐ Rip rap
- ☐ Low bridges
- ☐ Water control structure
- ☐ None

4. Check all surrounding conditions that promote recreational activities (Attach photos of evidence or unusual items of interest).

- ☐ Campgrounds
- ☐ Playgrounds
- ☐ Rural area
- ☒ Residential
- ☐ National forests
- ☐ Urban/suburban location
- ☐ Golf Course
- ☐ Sports Field
- ☐ Stairs/walkway
- ☐ Boating access (ramps)
- ☐ Beach
- ☐ Bridge crossing
- ☐ Commercial boating
- ☐ Trails/paths (hiking/biking)
- ☐ Paved parking lot
- ☐ Unimproved parking lot
- ☒ Roads (paved/unpaved)
- ☐ Populated area
- ☐ Docks or rafts
- ☐ Commercial outfitter
- ☐ Nearby school
- ☐ Power Line Corridor
- ☐ Parks (national/city/county/state)
- ☐ Public Property
- ☐ Other: _____
- ☐ None of the Above

Comments: _____

5. Check all surrounding conditions that impede recreational activities (Attach photos of evidence or unusual items of interest).

- ☐ Private Property
- ☐ No trespass sign
- ☐ Wildlife
- ☐ Steep slopes
- ☐ No public access
- ☐ No roads
- ☐ Fence
- ☐ Barge/ship traffic
- ☐ Industrial
- ☒ None of the Above
- ☐ Other: _____

Comments: Heavy vegetation, lot of ~~b~~ PL debris, ~~b~~ PL

6. Check any indications of human use (Attach photos).

- ☒ Roads
- ☐ Rope swings
- ☐ Dock/platform
- ☐ Foot paths/prints
- ☐ Other: _____
- ☐ RV/ATV Tracks
- ☐ Camping Sites
- ☐ Fire pit/ring
- ☐ Fishing Tackle
- ☐ NPDES Discharge
- ☐ Gates on corridor
- ☐ Children's toys
- ☐ Remnant's of Kid's play
- ☐ Organized event
- ☐ No Human Presence

Comments: _____

Field Data Sheets – Basic RUAA Survey

Stream Name: Caney Creek above tidal Site: 7
Date: 04/03/10 Time: 09:45

7. Check all water characteristics that apply (Attach photos).

Aquatic Vegetation: ☐ absent ☐ rare ☐ common ☒ abundant
Algae Cover: ☐ absent ☒ rare ☐ common ☐ abundant
Odor: ☒ none ☐ rare ☐ common ☐ abundant
Color: ☐ clear ☒ green ☐ red ☐ brown ☐ black
Bottom Deposit: ☐ sludge ☐ solids ☒ fine sediments ☐ none ☐ other
Water Surface: ☐ clear ☐ scum ☐ foam ☒ debris ☐ oil
Other: lot of debris at the bottom

8. Vertebrates Observed within 300 meter reach

Snakes	☒ None	☐ slight presence	☐ moderate presence	☐ large presence
Water Dependent Birds	☒ None	☐ slight presence	☐ moderate presence	☐ large presence
Alligators	☒ None	☐ slight presence	☐ moderate presence	☐ large presence

Comments:

9. Mammals Observed within 300 meter reach

Wild	☒ None	☐ slight presence	☐ moderate presence	☐ large presence
Domesticated Pets	☐ None	☒ slight presence	☐ moderate presence	☐ large presence
Livestock	☒ None	☐ slight presence	☐ moderate presence	☐ large presence
Feral Hogs	☒ None	☐ slight presence	☐ moderate presence	☐ large presence

Comments:

10. Evidence of wild animals or evidence of birds, cattle, hogs, etc.
☐ Tracks ☐ Fecal droppings ☐ Bird nests NA

11. Garbage Observed

Large garbage in the channel	☐ None	☒ Rare	☐ Common	☐ Abundant
Small garbage in the channel	☐ None	☐ Rare	☒ Common	☐ Abundant
Bank Garbage	☐ None	☒ Rare	☐ Common	☐ Abundant

Briefly describe the kinds of garbage observed: bucket in water, cans, plastic bags, styro foam plates, cups, beer can,

12. Is the site located in a wildlife preserve with large wildlife (i.e waterfowl) population? ☐ Yes ☒ No

13. Please document any other relevant information regarding recreational activities and the water body in general (for example, area outside of the stream reach evaluated).
Velocity Flow PL was taken at both the culverts

Field Data Sheet - Basic RUAA Survey

Stream Flow (Discharge) Measurement

Stream: Caney Creek above tidal Date: 04/03/10

Site: 7 Site

Description: Railroad St @ Caney Creek

Time Begin: 10:05 Time End: 10:30 Meter Type: Sontek Flowtracker

Observers: P. Lokanath, M. Franks Stream Width*: Section Width (W): 8 ft² PL

Observations:

	Section Midpoint (ft) (m)	Section Depth (ft) (m) (cm) (D)	Observational Depth** (ft)(m)	Velocity (V) At Point (ft/s)(m/s)	Velocity (V) Average (ft/s)(m/s)	Flow (Q) (m^3/s) (ft^3/s) Q = (W)(D)(V) Avg velocity
Culvert 1	8 ft (midpt)	2.4		~~0.00~~ PL ~~2.70~~ PL	0.0	0.002 ft/s
		2.7	1.35 5.4	0.0 -0.01	-0.005 ~~0.0~~	
		2.4			0.01	
Culvert 2	8 ft (midpt)	2.0			-0.04	-0.02 ft/s
		2.2			-0.01	
		1.5			0.00	

Total Q = -0.289 cfs

(see attached page for calculations)

(Used TI-89 graphing calculator)

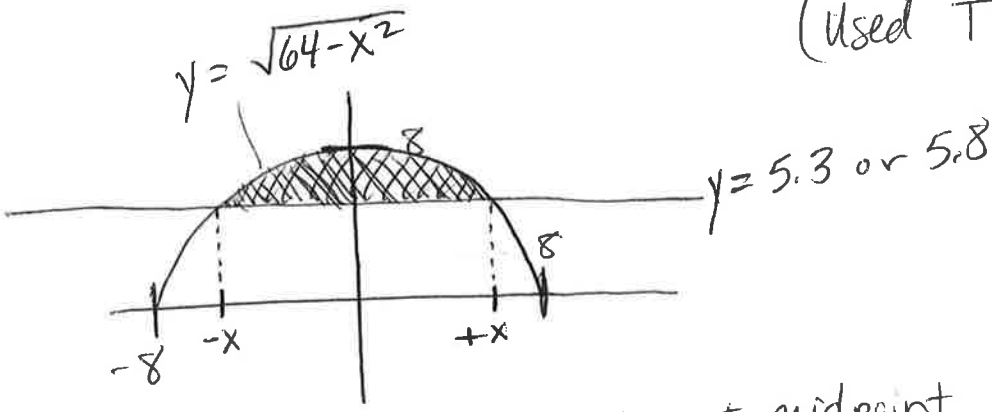

culvert diameter − depth of water at midpoint

$8 - 2.2 = 5.8 \rightarrow 5.8 = \sqrt{64-x^2} \rightarrow x = \pm 5.50999$

$8 - 2.7 = 5.3 \rightarrow 5.3 = \sqrt{64-x^2} \rightarrow x = \pm 5.9925$

(using solve function)

(Area ~~of~~ under circle from $\pm x$) − (area under line from $\pm x$) = shaded area

- used $\int f(x)\,dx$ function on graphing screen to calculate area

for Culvert 1 w/ depth of 2.7ft:

$(85.9456) - (63.5205) = 22.4251\ ft^2 \rightarrow \boxed{22.4\ ft^2}$

for culvert 2 w/ depth of 2.2ft:

$(80.5827) - (63.9159) = 16.6668\ ft^2 \rightarrow \boxed{16.7\ ft^2}$

---

cfs for Culvert 1: $(22.4\ ft^2)(0.002\ ft/s) = \boxed{0.045\ cfs}$

cfs for culvert 2: $(16.7\ ft^2)(-0.02\ ft/s) = \boxed{-0.334\ cfs}$

cfs 1 + cfs 2 = total = $\boxed{-0.289\ cfs}$ *

Field Data Sheets – Basic RUAA Survey

(should be completed for each site)

Data Collectors & Contact Information: P. Volcanoth, C. Gauthier, M. Franks, M. Shepard	
Date & Time: 04/03/10 10:51-11:16	County Name: Wharton
Stream Name: Caney Creek above tidal	
Segment No. or nearest downstream Segment No.: 1305	
Description of Site: FM 442 @ Caney Creek	

At any point during the Basic RUAA Survey it becomes apparent that primary contact recreation is clearly the use for the water body the investigator should stop conducting the UAA.

A. Stream Characteristics:

1. Check the following channel flow status that applies.

X dry ☐ no flow ☐ low ☐ normal ☐ high ☐ flooded

2. Check the following stream type that applies on the day of the survey:

X Ephemeral: A stream which flows only during or immediately after a rainfall event, and contains no refuge pools capable of sustaining a viable community of aquatic organisms.

☐ Intermittent: A stream which has a period of zero flow for at least one week during most years. Where flow records are available, a stream with a 7Q2 flow of less than 0.1 cubic feet per second is considered intermittent.

☐ Intermittent w/ perennial pools: An intermittent stream which maintains persistent pools even when flow in the stream is less than 0.1 cubic feet per second.

☐ Perennial: A stream which flows continuously throughout the year. Perennial streams have a 7Q2 equal to or greater than 0.1 cubic feet per second.

☐ Designated or unclassified tidal stream: A stream that is tidally influenced. If you checked this box, you will need to contact the Water Quality Standards Group and evaluate whether or not a bathing beach is located along the tidal stream and whether or not a bathing beach is located along the estuary, bay or Gulf water that the tidal stream flows into.

3. Streamflow

Use USGS gage data (if a gage is located at a site or within a quarter mile of a site) or use the Stream Flow (Discharge) Measurement Form and follow the procedures outlined in the most recent TCEQ Surface Water Quality Monitoring Procedures, Volume 1, RG-415. If USGS gage data is used for a site, include that information as an attachment and list the streamflow on the sampling date below. If the stream flow taken at one site is representative of the flow at another site(s), then that flow can be used as the observed flow and should be documented below. If the stream flow measured at one site is different from another site, then stream flow should be taken at both sites. ___/___ cfs

4. Water Quality Data (Field Parameters)

Field parameters should be collected in accordance with the procedures outlined in the most recent TCEQ Surface Water Quality Monitoring Procedures, Volume 1.

Air Temp 31 °C Water Temp 27 °C Secchi 0.582 m

5. Riparian Zone (Mark dominant categories with L (Left Bank) and R (Right Bank). Bank orientation is determined by the investigator facing downstream.)

___	Forest	R/L	Urban	___	Rip rap
___	Shrub dominated corridor	___	Pasture	___	Concrete
___	Herbaceous marsh	___	Row crops	Other (specify):	___
R/L	Mowed/maintained corridor	___	Denuded/Eroded bank		

6. Ease of bank access to the water body: X Easy ☐ Moderately easy ☐ Moderately difficult ☐ Difficult

7. Please describe access opportunities or explain why the site is not easily accessible (Attach photos for documentation):

Road & bridge crossing (FM 442)

8. Dominant Primary Substrate

☐ Cobble ☐ Sand ☐ Silt X Mud/Clay ☐ Gravel ☐ Bedrock ☐ Rip rap ☐ Concrete

Q58 QKC EPL

Field Data Sheets – Basic RUAA Survey

Stream Name Caney Creek above tidal Site: 8
Date: 04/03/10 Time: 10:51

B. Primary Contact Water Recreation Evaluation:
- Primary contact recreation draft definition: Water recreation activities, such as wading by children, swimming, water skiing, diving, tubing, surfing, and whitewater kayaking, canoeing, and rafting, involving a significant risk of ingestion of water.

1. Were water recreation activities that involve a significant risk of ingestion (full body immersion) observed at this site?
☐ Yes ☒ No primary contact recreation activities were observed

a. Check the following boxes of primary contact recreation activities observed at the time of the sampling event at the site (Attach photos of the activities or lack of activities).

☐ Wading-Children ☐ Tubing ☒ No primary contact activities that commonly occur were observed
☐ Wading-Adults ☐ Surfing
☐ Swimming ☐ Whitewater-kayaking, canoeing, rafting
☐ Water skiing ☐ Other: _____
☐ Diving ☐ frequent public swimming-created by publicly owned land or commercial operations

b. Check the number of individuals observed at the site: ☒ None ☒ 1-10 ☐ 11-20 ☐ 20-50 ☐ greater than 50
KC 4/26/10

c. Check the following that apply regarding the individuals proximity to the water body.
☐ Water in mouth or nose of the individual ☐ Primary touch: Individual's body (or portion) immersed in water
☐ Secondary touch: fishing, pets and related contact with water ☐ Individual is in a boat touching water
☐ Individual is on shore near water within 8 meters (25ft) of water ☒ Individual is well away from water between 8 and 30 meters (100 ft) ☒ ~~Not a~~pplicable
KC

2. If primary contact recreation activities are not observed, describe the physical characteristics of the water body that may hinder the frequency of primary contact (depth, etc.) (Attach photos, etc. for documentation).
No water flow under or near the bridge swamp, lot of vegetation in water
substantial pool away from the bridge. Too shallow

3. Describe if there is public access (e.g. parks, roads, etc.) (Attach photos, maps, etc. for documentation).
Road (FM 442), bridge

4. Is an area with primary contact recreation activities or a bathing beach (e.g. state/local parks with swimming, etc.) located near (e.g. within 5 miles upstream and downstream) this site? ~~NA~~ no

C. Secondary Contact Water Recreation Evaluation:
- Secondary contact recreation 1: Water recreation activities, such as fishing, commercial and recreational boating, and limited body contact incidental to shoreline activity, not involving a significant risk of water ingestion and that commonly occur.
- Secondary contact recreation 2: Water recreation activities, such as fishing, commercial and recreational boating, and limited body contact incidental to shoreline activity, not involving a significant risk of water ingestion but that occur less frequently than for secondary contact recreation 1 due to (1) physical characteristics of the water body and/or (2) limited public access.

1. Were water recreation activities observed at the site, but the nature of the recreation does not involve a significant risk of ingestion (e.g. secondary contact recreation activities)? ☐ Yes ☒ No secondary contact recreation activities were observed

a. Check the following boxes of secondary contact recreation activities that were observed at the time of the sampling event at the site (Attach photos of activities or lack of activities).

☐ Fishing
☐ Boating-commercial, recreational
☐ Non-whitewater-kayaking, rafting, canoeing
☒ No secondary contact recreation activities were observed
☐ Other secondary contact activities: _____

Field Data Sheets – Basic RUAA Survey

Stream Name Caney Creek above tidal Site: 8
Date: 04/03/10 Time: 10:51

b. Check the number of individuals observed at the site.
☐ None ☒ 1-10 ☐ 11-20 ☐ 20-50 ☐ greater than 50

c. Check the following that apply regarding the individuals proximity to the water body.
☐ Secondary touch: fishing, pets and related contact with water ☐ In a boat touching water
☐ Body on shore near water within 8 meters (25ft) of water ☒ Body well away from water between 8 and 30 meters (100 ft)

2. If secondary contact recreation activities are not observed, describe the physical characteristics of the water body that may hinder the frequency of secondary contact (Attach photos, etc. for documentation).

Same as before

3. If secondary contact recreation activities are observed, how often do water recreational activities occur that do not involve a significant risk of water ingestion? ☐ frequently ☐ infrequently NA
Please describe how often the activities occur? ☐ Unknown ☐ Never ☐ Daily ☐ Monthly ☐ Yearly

4. If infrequently, what is the reason? ☐ physical characteristics of the water body ☐ limited public access ☐ other
If other, list reasons: NA

5. Describe the physical characteristics of the water body that hinders the frequency of secondary contact recreation (depth, etc.) (Attach photos or depth measurements, etc. for documentation).

Same as before

6. Describe why there is limited public access (e.g. lack of roads, river or stream banks overgrown, etc.) (Attach photos, maps, etc. for documentation).

Same as before

D. Noncontact Recreation Evaluation NA

Noncontact recreation applies to water bodies where recreation activities do not involve a significant risk of water ingestion, and where primary and secondary contact recreation uses do not occur because of unsafe conditions, such as barge traffic.

1. Provide site-specific information and documentation (including photographs) regarding unsafe conditions, recreation activities, and presence or absence of water recreation activities.

Field Data Sheets – Basic RUAA Survey

Stream Name Caney Creek above tidal Site: 8
Date: 4-3-2010 FDS Page 3 of 8 Time: 10:51 AM

E. Stream Channel and Substantial Pools
Please check the following which best describes the river or stream: ✓ Wadeable N/A Non-wadeable

1. Wadeable Streams
Determine whether or not the average depth at the thalweg is greater than 0.5 meters and if there are substantial pools with a depth of 1 meter or greater. Walk an approximately 300 meter reach (total) at the site and take the following measurements within the 300 meter reach. Measurements should be taken during base flow conditions (sustained or typical dry, warm-weather flows between rainfall events, excluding unusual antecedent conditions of drought or wet weather

Also, take photos facing upstream, downstream, left bank, and right bank at the 30 meters, 150 meters, and 300 meters.
Photos #s (30 meters) Upstream ✓ Downstream ✓ Left Bank ✓ Right Bank ✓ upstream of bridge
Photos #s (150 meters) Upstream ✓ Downstream ✓ Left Bank ✓ Right Bank ✓ bridge
Photos #s (300 meters) Upstream ✓ Downstream ✓ Left Bank ✓ Right Bank ✓ downstream of bridge
downstream ✓ ✓ ✓ ✓

N/A a) Substantial pools - Measure the length of each pool (if > 10 pools only measure 10 pools), the width (at the widest point), and the deepest depth. A substantial pool is considered a pool greater than 10 meters in length for the purposes of a Basic RUAA Survey. If depth and/or width measurements were not attainable, explain why.

	Length (meters)	Width (meters)	Depth (meters)
Pool 1	69.3m	0.694m	0.66ft./0.201 downstream of bridge
Pool 2			
Pool 3			
Pool 4			
Pool 5			
Pool 6			
Pool 7			
Pool 8			
Pool 9			
Pool 10			

N/A b)Average depth at the thalweg –Take depth measurements approximately every 30 meters to calculate an average depth at the thalweg (at least 10 measurements needed). If depth and/or width measurements were not attainable, explain why.

Distance	Depth (meters)
30 meters	
60 meters	
90 meters	
120 meters	
150 meters	0.2ft, 0.061m puddle beneath bridge
180 meters	
210 meters	
240 meters	
270 meters	
300 meters	
Average	

Field Data Sheets – Basic RUAA Survey

Stream Name: Caney Creek above tidal Site: 8
Date: 4-3-2010 Time: 10:51AM

N/A c) Stream width - Measure (1) the width at one point which represents the typical average width of the 300 meter reach; (2) the width at the narrowest point of the stream within the 300 meter reach; and (3) the width at the widest point of the stream within the 300 meter reach.

Measurement Type	Width (meters)
Typical Average Width of 300 meter reach	
Width at narrowest point of the stream within 300 meter reach	
Width at the widest point of the stream within 300 meter reach	

d) Is there sufficient water within a 300 meter stream reach during base flow conditions to support primary contact recreation? ☐ Yes ☑ No
COMMENTS:
Very little water. too shallow

2. Non-wadeable Streams
If accessible, take 10 width measurements which represent typical widths of the 300 meter reach. If the water is too deep and not accessible record the estimated average width of the water body.

Also, take photos facing upstream, downstream, left bank, and right bank at .
Photos #s (30 meters) Upstream____ Downstream____ Left Bank ____ Right Bank____
Photos #s (150 meters) Upstream____ Downstream____ Left Bank ____ Right Bank____
Photos #s (300 meters) Upstream____ Downstream____ Left Bank ____ Right Bank____

# Measurements	Width (meters)
1	
2	
3	
4	
5	
6	
7	
8	
9	
10	

Field Data Sheets – Basic RUAA Survey

Stream Name Caney Creek above tidal Site: 8
Date: 04/03/10 Time: 10:51

F. Additional RUAA Information

1. Check the following activities observed over the site reach.

- ☐ Drinking or water in mouth
- ☐ Bathing
- ☒ Walking
- ☐ Jogging/running
- ☐ Bicycling
- ☒ Standing
- ☐ Sitting
- ☐ Lying down/sleeping
- ☐ Playing on shoreline
- ☐ Picnicking
- ☐ Motorcycle/ATV
- ☐ Hunting/Trapping
- ☐ Wildlife watching
- ☐ None
- ☐ Other: _____

Residents standing in their yard adjacent to the segment

2. Are there permanent or long-term hydrologic modifications that are constructed and operated in a way that affects the recreational uses? ☒ Yes ☐ No (If yes, please provide supporting documentation and photos.)
Comments: bridge.

3. Check any channel obstructions that apply (Attach photos).

- ☐ Culverts
- ☒ Barbed wire
- ☐ Utility pipe
- ☐ Fences
- ☐ Dams
- ☐ Other (specify): _____
- ☐ Log jams
- ☐ Thick vegetation
- ☐ Rip rap
- ☐ Low bridges
- ☐ Water control structure
- ☐ None

4. Check all surrounding conditions that promote recreational activities (Attach photos of evidence or unusual items of interest).

- ☐ Campgrounds
- ☐ Playgrounds
- ☐ Rural area
- ☒ Residential
- ☐ National forests
- ☒ Urban/suburban location
- ☐ Golf Course
- ☐ Sports Field
- ☐ Stairs/walkway
- ☐ Boating access (ramps)
- ☐ Beach
- ☐ Bridge crossing
- ☐ Commercial boating
- ☐ Trails/paths (hiking/biking)
- ☐ Paved parking lot
- ☐ Unimproved parking lot
- ☒ Roads (paved/unpaved)
- ☒ Populated area
- ☐ Docks or rafts
- ☐ Commercial outfitter
- ☐ Nearby school
- ☐ Power Line Corridor
- ☐ Parks (national/city/county/state)
- ☐ Public Property
- ☐ Other: _____
- ☐ None of the Above

Comments: _____

5. Check all surrounding conditions that impede recreational activities (Attach photos of evidence or unusual items of interest).

- ☐ Private Property
- ☐ No trespass sign
- ☐ Wildlife
- ☐ Steep slopes
- ☐ No public access
- ☐ No roads
- ☐ Fence
- ☐ Barge/ship traffic
- ☐ Industrial
- ☒ None of the Above
- ☐ Other: _____

Comments: No water

6. Check any indications of human use (Attach photos).

- ☒ Roads
- ☐ Rope swings
- ☐ Dock/platform
- ☐ Foot paths/prints
- ☐ Other: _____
- ☐ RV/ATV Tracks
- ☐ Camping Sites
- ☐ Fire pit/ring
- ☐ Fishing Tackle
- ☐ NPDES Discharge
- ☐ Gates on corridor
- ☐ Children's toys
- ☐ Remnant's of Kid's play
- ☐ Organized event
- ☐ No Human Presence

Comments: _____

Field Data Sheets – Basic RUAA Survey

Stream Name: Caney Creek above tidal Site: 8
Date: 04/03/10 Time: 10:51

7. Check all water characteristics that apply (Attach photos).
Aquatic Vegetation: ☐ absent ☐ rare ☐ common ☒ abundant
Algae Cover: ☐ absent ☒ rare ☒ common ☐ abundant
Odor: ☒ none ☐ rare ☐ common ☐ abundant
Color: ☐ clear ☒ green ☐ red ☐ brown ☐ black
Bottom Deposit: ☒ sludge ☐ solids ☐ fine sediments ☐ none ☐ other
Water Surface: ☐ clear ☒ scum ☐ foam ☐ debris ☐ oil
Other: water covered with algae.

8. Vertebrates Observed within 300 meter reach

Snakes	☒ None	☐ slight presence	☐ moderate presence	☐ large presence
Water Dependent Birds	☒ None	☐ slight presence	☐ moderate presence	☐ large presence
Alligators	☒ None	☐ slight presence	☐ moderate presence	☐ large presence

Comments:

9. Mammals Observed within 300 meter reach

Wild	☒ None	☐ slight presence	☐ moderate presence	☐ large presence
Domesticated Pets	☐ None	☒ slight presence	☐ moderate presence	☐ large presence
Livestock	☒ None	☐ slight presence	☐ moderate presence	☐ large presence
Feral Hogs	☒ None	☐ slight presence	☐ moderate presence	☐ large presence

Comments:

10. Evidence of wild animals or evidence of birds, cattle, hogs, etc.
☐ Tracks ☐ Fecal droppings ☒ Bird nests

11. Garbage Observed

Large garbage in the channel	☒ None	☐ Rare	☐ Common	☐ Abundant
Small garbage in the channel	☐ None	☒ Rare	☐ Common	☐ Abundant
Bank Garbage	☐ None	☒ Rare	☐ Common	☐ Abundant

Briefly describe the kinds of garbage observed: Plastic bag, cigarette butts, cans.

12. Is the site located in a wildlife preserve with large wildlife (i.e waterfowl) population? ☐ Yes ☒ No

13. Please document any other relevant information regarding recreational activities and the water body in general (for example, area outside of the stream reach evaluated).
People doing lawn work, also took interviews.

	width		length
Pool 1	6.94m	0.66ft	69.3m

Field Data Sheet - Basic RUAA Survey
Stream Flow (Discharge) Measurement

Stream: Caney Creek above tidal Date: 4/3/10
Site: 8 Site
Description: FM 442 @ Caney Creek
Time Begin: Time End: Meter Type: Sontek Flowtracker
Observers: Stream Width*: Section Width (W):
Observations:

Section Midpoint (ft) (m)	Section Depth (ft) (m) (cm) (D)	Observational Depth** (ft)(m)	Velocity (V)		Flow (Q) (m^3/s) (ft^3/s) Q = (W)(D)(V)
			At Point (ft/s)(m/s)	Average (ft/s)(m/s)	

No Flow taken due to lack of water.

Field Data Sheets – Basic RUAA Survey

(should be completed for each site)

Data Collectors & Contact Information: P. Olkanath, C Gauthier, M. Franks, M. Shepard	
Date & Time: 04/03/10 11:30-12:20	County Name: Wharton
Stream Name: Caney Creek above tidal	
Segment No. or nearest downstream Segment No.: 1305	
Description of Site: N Sinclair St @ Caney Creek	

At any point during the Basic RUAA Survey it becomes apparent that primary contact recreation is clearly the use for the water body the investigator should stop conducting the UAA.

A. Stream Characteristics:

1. Check the following channel flow status that applies.
☐ dry ☐ no flow ☐ low ☒ normal ☐ high ☐ flooded

2. Check the following stream type that applies on the day of the survey:
Ephemeral: A stream which flows only during or immediately after a rainfall event, and contains no refuge pools capable of sustaining a viable community of aquatic organisms.
☐ Intermittent: A stream which has a period of zero flow for at least one week during most years. Where flow records are available, a stream with a 7Q2 flow of less than 0.1 cubic feet per second is considered intermittent.
☐ Intermittent w/ perennial pools: An intermittent stream which maintains persistent pools even when flow in the stream is less than 0.1 cubic feet per second.
☒ Perennial: A stream which flows continuously throughout the year. Perennial streams have a 7Q2 equal to or greater than 0.1 cubic feet per second.
☐ Designated or unclassified tidal stream: A stream that is tidally influenced. If you checked this box, you will need to contact the Water Quality Standards Group and evaluate whether or not a bathing beach is located along the tidal stream and whether or not a bathing beach is located along the estuary, bay or Gulf water that the tidal stream flows into.

3. Streamflow
Use USGS gage data (if a gage is located at a site or within a quarter mile of a site) or use the Stream Flow (Discharge) Measurement Form and follow the procedures outlined in the most recent TCEQ Surface Water Quality Monitoring Procedures, Volume 1, RG-415. If USGS gage data is used for a site, include that information as an attachment and list the streamflow on the sampling date below. If the stream flow taken at one site is representative of the flow at another site(s), then that flow can be used as the observed flow and should be documented below. If the stream flow measured at one site is different from another site, then stream flow should be taken at both sites. - 0.499 cfs

4. Water Quality Data (Field Parameters)
Field parameters should be collected in accordance with the procedures outlined in the most recent TCEQ Surface Water Quality Monitoring Procedures, Volume 1.
Air Temp 33.5 °C Water Temp 26 °C Secchi 0.38 m

5. Riparian Zone (Mark dominant categories with L (Left Bank) and R (Right Bank). Bank orientation is determined by the investigator facing downstream.)

____ Forest	R Urban	____ Rip rap
____ Shrub dominated corridor	R/L Pasture	____ Concrete
____ Herbaceous marsh	____ Row crops	Other (specify): ____
R Mowed/maintained corridor	____ Denuded/Eroded bank	

6. Ease of bank access to the water body: ☒ Easy ☐ Moderately easy ☐ Moderately difficult ☐ Difficult

7. Please describe access opportunities or explain why the site is not easily accessible (Attach photos for documentation):
up unpaved road (N. Sinclair St)

8. Dominant Primary Substrate
☐ Cobble ☐ Sand ☐ Silt ☒ Mud/Clay ☐ Gravel ☐ Bedrock ☐ Rip rap ☐ Concrete

QKC E PL

Field Data Sheets – Basic RUAA Survey

Stream Name Caney Creek above tidal Site: 9
Date: 04/03/10 Time: 11:30

B. Primary Contact Water Recreation Evaluation:
- Primary contact recreation draft definition: Water recreation activities, such as wading by children, swimming, water skiing, diving, tubing, surfing, and whitewater kayaking, canoeing, and rafting, involving a significant risk of ingestion of water.

1. Were water recreation activities that involve a significant risk of ingestion (full body immersion) observed at this site?
☐ Yes ☒ No primary contact recreation activities were observed
a. Check the following boxes of primary contact recreation activities observed at the time of the sampling event at the site (Attach photos of the activities or lack of activities).

☐ Wading-Children	☐ Tubing	☒ No primary contact activities that commonly occur were observed
☐ Wading-Adults	☐ Surfing	
☐ Swimming	☐ Whitewater-kayaking, canoeing, rafting	
☐ Water skiing	☐ Other: _____	
☐ Diving	☐ frequent public swimming-created by publicly owned land or commercial operations	

b. Check the number of individuals observed at the site: ~~☒ None~~ ☒ 1-10 ☐ 11-20 ☐ 20-50 ☐ greater than 50
KC 4/26/10

c. Check the following that apply regarding the individuals proximity to the water body.
☐ Water in mouth or nose of the individual ☐ Primary touch: Individual's body (or portion) immersed in water
☐ Secondary touch: fishing, pets and related contact with water ☐ Individual is in a boat touching water
☐ Individual is on shore near water within 8 meters (25ft) of water ☒ Individual is well away from water between 8 and 30 meters (100 ft) ~~☒ Not~~ applicable
KC

2. If primary contact recreation activities are not observed, describe the physical characteristics of the water body that may hinder the frequency of primary contact (depth, etc.) (Attach photos, etc. for documentation).
lot of trash & debris in water, soft bottom, lot of aquatic vegetation upstream

3. Describe if there is public access (e.g. parks, roads, etc.) (Attach photos, maps, etc. for documentation).
unpaved road, segment behind school

4. Is an area with primary contact recreation activities or a bathing beach (e.g. state/local parks with swimming, etc.) located near (e.g. within 5 miles upstream and downstream) this site? NO

C. Secondary Contact Water Recreation Evaluation:
- Secondary contact recreation 1: Water recreation activities, such as fishing, commercial and recreational boating, and limited body contact incidental to shoreline activity, not involving a significant risk of water ingestion and that commonly occur.
- Secondary contact recreation 2: Water recreation activities, such as fishing, commercial and recreational boating, and limited body contact incidental to shoreline activity, not involving a significant risk of water ingestion but that occur less frequently than for secondary contact recreation 1 due to (1) physical characteristics of the water body and/or (2) limited public access.

1. Were water recreation activities observed at the site, but the nature of the recreation does not involve a significant risk of ingestion (e.g. secondary contact recreation activities)? ☐ Yes ☒ No secondary contact recreation activities were observed
a. Check the following boxes of secondary contact recreation activities that were observed at the time of the sampling event at the site (Attach photos of activities or lack of activities).
☐ Fishing
☐ Boating-commercial, recreational
☐ Non-whitewater-kayaking, rafting, canoeing
☒ No secondary contact recreation activities were observed
☐ Other secondary contact activities: _____

Field Data Sheets – Basic RUAA Survey

Stream Name Caney Creek above tidal Site: 9
Date: 04/03/10 Time: 11:30

b. Check the number of individuals observed at the site.
☒ None ☒ 1-10 ☐ 11-20 ☐ 20-50 ☐ greater than 50
PL

c. Check the following that apply regarding the individuals proximity to the water body.
☐ Secondary touch: fishing, pets and related contact with water ☐ In a boat touching water
☐ Body on shore near water within 8 meters (25ft) of water ☒ Body well away from water between 8 and 30 meters (100 ft) woman throwing trash in the bin & a child standing.

2. If secondary contact recreation activities are not observed, describe the physical characteristics of the water body that may hinder the frequency of secondary contact (Attach photos, etc. for documentation).
same as before

3. If secondary contact recreation activities are observed, how often do water recreational activities occur that do not involve a significant risk of water ingestion? ☐ frequently ☐ infrequently NA
Please describe how often the activities occur? ☐ Unknown ☐ Never ☐ Daily ☐ Monthly ☐ Yearly

4. If infrequently, what is the reason? ☐ physical characteristics of the water body ☐ limited public access ☐ other
If other, list reasons: NA

5. Describe the physical characteristics of the water body that hinders the frequency of secondary contact recreation (depth, etc.) (Attach photos or depth measurements, etc. for documentation).
Same as before

6. Describe why there is limited public access (e.g. lack of roads, river or stream banks overgrown, etc.) (Attach photos, maps, etc. for documentation).
NA

D. Noncontact Recreation Evaluation NA

Noncontact recreation applies to water bodies where recreation activities do not involve a significant risk of water ingestion, and where primary and secondary contact recreation uses do not occur because of unsafe conditions, such as barge traffic.

1. Provide site-specific information and documentation (including photographs) regarding unsafe conditions, recreation activities, and presence or absence of water recreation activities.

Field Data Sheets – Basic RUAA Survey

Stream Name Caney Creek above tidal Site: 9
Date: 4-3-2010 FDS Page 3 of 8 Time: 11:30

E. Stream Channel and Substantial Pools
Please check the following which best describes the river or stream: ✓ Wadeable ☐ Non-wadeable

1. Wadeable Streams
Determine whether or not the average depth at the thalweg is greater than 0.5 meters and if there are substantial pools with a depth of 1 meter or greater. Walk an approximately 300 meter reach (total) at the site and take the following measurements within the 300 meter reach. Measurements should be taken during base flow conditions (sustained or typical dry, warm-weather flows between rainfall events, excluding unusual antecedent conditions of drought or wet weather

Also, take photos facing upstream, downstream, left bank, and right bank at the 30 meters, 150 meters, and 300 meters.
Photos #s (30 meters) Upstream ✓ Downstream ✓ Left Bank ✓ Right Bank ✓
Photos #s (150 meters) Upstream ✓ Downstream ✓ Left Bank ✓ Right Bank ✓
Photos #s (300 meters) Upstream ✓ Downstream ✓ Left Bank ✓ Right Bank ✓

a) Substantial pools - Measure the length of each pool (if > 10 pools only measure 10 pools), the width (at the widest point), and the deepest depth. A substantial pool is considered a pool greater than 10 meters in length for the purposes of a Basic RUAA Survey. If depth and/or width measurements were not attainable, explain why.

	Length (meters)	Width (meters)	Depth (meters)
Pool 1			
Pool 2			
Pool 3			
Pool 4			
Pool 5			
Pool 6			
Pool 7			
Pool 8			
Pool 9			
Pool 10			

b)Average depth at the thalweg –Take depth measurements approximately every 30 meters to calculate an average depth at the thalweg (at least 10 measurements needed). If depth and/or width measurements were not attainable, explain why.

	Distance	Depth (meters)	
PIC	30 meters	2.3 ft	0.701 m
	60 meters	1.10'	0.335 m
	90 meters	1.10'	0.335
	120 meters	1.74'	0.530
PIC	150 meters	1.98'	0.603
	180 meters	1.24'	0.378
	210 meters	1.7'	0.518
	240 meters	1.8 ft	0.549
	270 meters	2.24 ft.	0.683
PIC	300 meters	2.32 ft.	0.707
1	**Average**		0.534 m

Field Data Sheets – Basic RUAA Survey

Stream Name Caney Creek above tidal Site: 9
Date: 4-13-2010 Time: 11:30

c) Stream width - Measure (1) the width at one point which represents the typical average width of the 300 meter reach; (2) the width at the narrowest point of the stream within the 300 meter reach; and (3) the width at the widest point of the stream within the 300 meter reach.

Measurement Type	Width (meters)
Typical Average Width of 300 meter reach	28.1' 8.56 m
Width at narrowest point of the stream within 300 meter reach	11.0 m
Width at the widest point of the stream within 300 meter reach	12.6 m

d) Is there sufficient water within a 300 meter stream reach during base flow conditions to support primary contact recreation? ☐ Yes ☑ No PL

COMMENTS:
Water is too shallow; heavy aquatic vegetation. Area in vicinity of 240-300m sites you sink in substrate to your knees. Same at 30m site.

2. Non-wadeable Streams
If accessible, take 10 width measurements which represent typical widths of the 300 meter reach. If the water is too deep and not accessible record the estimated average width of the water body.

Also, take photos facing upstream, downstream, left bank, and right bank at .
Photos #s (30 meters) Upstream____ Downstream____ Left Bank ____ Right Bank____
Photos #s (150 meters) Upstream____ Downstream____ Left Bank ____ Right Bank____
Photos #s (300 meters) Upstream____ Downstream____ Left Bank ____ Right Bank____

# Measurements	Width (meters)
1	
2	
3	
4	
5	
6	
7	
8	
9	
10	

Field Data Sheets – Basic RUAA Survey

Stream Name Caney Creek above tidal Site: 9
Date: 04/03/10 Time: 11:30

F. Additional RUAA Information

1. Check the following activities observed over the site reach.

- ☐ Drinking or water in mouth
- ☐ Bathing
- ☒ Walking
- ☐ Jogging/running
- ☐ Bicycling
- ☒ Standing
- ☐ Sitting
- ☐ Lying down/sleeping
- ☐ Playing on shoreline
- ☐ Picnicking
- ☐ Motorcycle/ATV
- ☐ Hunting/Trapping
- ☐ Wildlife watching
- ☐ None
- ☐ Other: _____

2. Are there permanent or long-term hydrologic modifications that are constructed and operated in a way that affects the recreational uses? ☐ Yes ☒ No (If yes, please provide supporting documentation and photos.)
Comments: _____

3. Check any channel obstructions that apply (Attach photos).

- ☐ Culverts
- ☒ Barbed wire
- ☐ Utility pipe
- ☐ Fences
- ☐ Dams
- ☐ Other (specify): _____
- ☒ Log jams
- ☒ Thick vegetation
- ☐ Rip rap
- ☐ Low bridges
- ☐ Water control structure
- ☐ None

4. Check all surrounding conditions that promote recreational activities (Attach photos of evidence or unusual items of interest).

- ☐ Campgrounds
- ☒ Playgrounds
- ☐ Rural area
- ☒ Residential
- ☐ National forests
- ☐ Urban/suburban location
- ☐ Golf Course
- ☐ Sports Field
- ☐ Stairs/walkway
- ☐ Boating access (ramps)
- ☐ Beach
- ☐ Bridge crossing
- ☐ Commercial boating
- ☐ Trails/paths (hiking/biking)
- ☐ Paved parking lot
- ☐ Unimproved parking lot
- ☒ Roads (paved/unpaved)
- ☐ Populated area
- ☐ Docks or rafts
- ☐ Commercial outfitter
- ☒ Nearby school
- ☐ Power Line Corridor
- ☐ Parks (national/city/county/state)
- ☐ Public Property
- ☐ Other: _____
- ☐ None of the Above

Comments: _____

5. Check all surrounding conditions that impede recreational activities (Attach photos of evidence or unusual items of interest).

- ☐ Private Property
- ☐ No trespass sign
- ☐ Wildlife
- ☐ Steep slopes
- ☐ No public access
- ☐ No roads
- ☐ Fence
- ☐ Barge/ship traffic
- ☐ Industrial
- ☒ None of the Above
- ☒ Other: _____

Comments: lot of trash & debris in water

6. Check any indications of human use (Attach photos).

- ☒ Roads
- ☐ Rope swings
- ☐ Dock/platform
- ☐ Foot paths/prints
- ☐ Other: _____
- ☐ RV/ATV Tracks
- ☐ Camping Sites
- ☐ Fire pit/ring
- ☐ Fishing Tackle
- ☐ NPDES Discharge
- ☐ Gates on corridor
- ☒ Children's toys
- ☐ Remnant's of Kid's play
- ☐ Organized event
- ☐ No Human Presence

Comments: Foot ball in water

Field Data Sheets – Basic RUAA Survey

Stream Name Caney Creek above tidal Site: 9
Date: 04/03/10 Time: 11:30

7. Check all water characteristics that apply (Attach photos).

Aquatic Vegetation: ☐ absent ☐ rare ☒ common ☐ abundant
Algae Cover: ☐ absent ☒ rare ☐ common ☐ abundant
Odor: ☐ none ☒ rare ☐ common ☐ abundant
Color: ☐ clear ☐ green ☐ red ☒ brown ☐ black
Bottom Deposit: ☒ sludge ☐ solids ☐ fine sediments ☐ none ☐ other
Water Surface: ☐ clear ☒ scum ☐ foam ☐ debris ☐ oil
Other:

8. Vertebrates Observed within 300 meter reach

Snakes	☒ None	☐ slight presence	☐ moderate presence	☐ large presence
Water Dependent Birds	☐ None	☒ slight presence	☐ moderate presence	☐ large presence
Alligators	☒ None	☐ slight presence	☐ moderate presence	☐ large presence

Comments:

9. Mammals Observed within 300 meter reach

Wild	☒ None	☐ slight presence	☐ moderate presence	☐ large presence
Domesticated Pets	☐ None	☒ slight presence	☐ moderate presence	☐ large presence
Livestock	☐ None	☒ slight presence	☐ moderate presence	☐ large presence
Feral Hogs	☒ None	☐ slight presence	☐ moderate presence	☐ large presence

Comments:

10. Evidence of wild animals or evidence of birds, cattle, hogs, etc.
☒ Tracks ☒ Fecal droppings ☐ Bird nests

11. Garbage Observed

Large garbage in the channel	☐ None	☒ Rare	☐ Common	☐ Abundant
Small garbage in the channel	☐ None	☒ Rare	☐ Common	☐ Abundant
Bank Garbage	☐ None	☒ Rare	☐ Common	☐ Abundant

Briefly describe the kinds of garbage observed: football, plastic cups, bottles plastic cylinder, tires, plastic bucket

12. Is the site located in a wildlife preserve with large wildlife (i.e waterfowl) population? ☐ Yes ☒ No

13. Please document any other relevant information regarding recreational activities and the water body in general (for example, area outside of the stream reach evaluated).

Lots of turtles.

Field Data Sheet - Basic RUAA Survey

Stream Flow (Discharge) Measurement

Stream: Caney Creek above tidal Date: 04/03/10

Site: 9 Site

Description: N Sinclair St @ Caney Creek

Time Begin: 11:40 Time End: 12:10 Meter Type: Sontek Flowtracker

Observers: P. Volcanath, M. Franks Stream Width*: 28.1 Section Width (W): ~~2.8~~ PL 1.405

Observations:

Section Midpoint (ft)(m)	Section Depth (ft)(m)(cm) (D)	Observational Depth** (ft)(m)	Velocity (V) At Point (ft/s)(m/s)	Velocity (V) Average (ft/s)(m/s)	Flow (Q) (m^3/s)(ft^3/s) Q = (W)(D)(V)	Flow ft³/s
~~1.405~~ PL					KC 10/27/10	
0.702	0.5			0.03	~~0.03~~	0.021
2.107	0.7			-0.01	~~-0.01~~	-0.010
3.512	1.0			0.02	~~0.02~~	0.028
4.917	1.3			-0.05	~~-0.05~~	-0.091
6.322	1.3			-0.06	~~-0.06~~	-0.110
7.7 ~~2.81~~	1.5			+0.01	~~0.01~~	0.021
9.1 ~~4.215~~	1.5			0.03	~~0.03~~	0.063
10.5 ~~5.620~~	1.5			0.05	~~0.05~~	0.105
11.9 ~~7.025~~	1.6			-0.02	~~-0.02~~	-0.045
13.3 ~~8.43~~	1.6			-0.01	~~-0.01~~	-0.022
14.7 ~~9.835~~	1.6			-0.03	~~-0.03~~	-0.067
16.1	1.6			-0.01	~~-0.01~~	-0.022
17.5	1.4			-0.02	~~-0.02~~	-0.039
18.9	1.4			-0.01	~~-0.01~~	-0.020
20.3	1.4			-0.05	~~-0.05~~	-0.098
21.7	1.4			-0.01	~~-0.01~~	-0.020
23.1	1.3			-0.02	~~-0.02~~	-0.037
24.5	1.3			-0.07	~~-0.07~~	-0.128
25.9	1.0			-0.03	~~-0.03~~	-0.042
27.3	1.0			0.01	~~0.01~~	0.014

KC 10/27/10

Q = ~~-0.588~~ cfs

-0.499

E MEC

Field Data Sheets – Basic RUAA Survey

(should be completed for each site)

Data Collectors & Contact Information:	P. Lokanath, C. Gauthier, M. Franks, M. Sheperd
Date & Time: 04/03/10 12:34-13:05	County Name: Wharton
Stream Name: Caney Creek above tidal	
Segment No. or nearest downstream Segment No.: 1305	
Description of Site: FM 1301 @ Caney Creek	

At any point during the Basic RUAA Survey it becomes apparent that primary contact recreation is clearly the use for the water body the investigator should stop conducting the UAA.

A. Stream Characteristics:

1. Check the following channel flow status that applies.

☐ dry ☐ no flow ☒ low ☐ normal ☐ high ☐ flooded

2. Check the following stream type that applies on the day of the survey:

☐ Ephemeral: A stream which flows only during or immediately after a rainfall event, and contains no refuge pools capable of sustaining a viable community of aquatic organisms.

☐ Intermittent: A stream which has a period of zero flow for at least one week during most years. Where flow records are available, a stream with a 7Q2 flow of less than 0.1 cubic feet per second is considered intermittent.

☐ Intermittent w/ perennial pools: An intermittent stream which maintains persistent pools even when flow in the stream is less than 0.1 cubic feet per second.

☒ Perennial: A stream which flows continuously throughout the year. Perennial streams have a 7Q2 equal to or greater than 0.1 cubic feet per second.

☐ Designated or unclassified tidal stream: A stream that is tidally influenced. If you checked this box, you will need to contact the Water Quality Standards Group and evaluate whether or not a bathing beach is located along the tidal stream and whether or not a bathing beach is located along the estuary, bay or Gulf water that the tidal stream flows into.

3. Streamflow

Use USGS gage data (if a gage is located at a site or within a quarter mile of a site) or use the Stream Flow (Discharge) Measurement Form and follow the procedures outlined in the most recent TCEQ Surface Water Quality Monitoring Procedures, Volume 1, RG-415. If USGS gage data is used for a site, include that information as an attachment and list the streamflow on the sampling date below. If the stream flow taken at one site is representative of the flow at another site(s), then that flow can be used as the observed flow and should be documented below. If the stream flow measured at one site is different from another site, then stream flow should be taken at both sites. 0.205 cfs

4. Water Quality Data (Field Parameters)

Field parameters should be collected in accordance with the procedures outlined in the most recent TCEQ Surface Water Quality Monitoring Procedures, Volume 1.

Air Temp 32 °C Water Temp 26 °C Secchi 0.838 m

5. Riparian Zone (Mark dominant categories with L (Left Bank) and R (Right Bank). Bank orientation is determined by the investigator facing downstream.)

____ Forest	____ Urban	____ Rip rap
R/L Shrub dominated corridor	____ Pasture	____ Concrete
____ Herbaceous marsh	____ Row crops	Other (specify): ____
____ Mowed/maintained corridor	____ Denuded/Eroded bank	

6. Ease of bank access to the water body: ☐ Easy ☒ Moderately easy ☐ Moderately difficult ☐ Difficult

7. Please describe access opportunities or explain why the site is not easily accessible (Attach photos for documentation):

Road & bridge. the segment is fenced off (barbed wires) able to survey only 200 ft

8. Dominant Primary Substrate

☐ Cobble ☐ Sand ☐ Silt ☒ Mud/Clay ☐ Gravel ☐ Bedrock ☐ Rip rap ☐ Concrete

Q² DHR

74

Q KC FPV

Field Data Sheets – Basic RUAA Survey

Stream Name Caney Creek above tidal Site: 10
Date: 04/03/10 Time: 12:34

B. Primary Contact Water Recreation Evaluation:
- Primary contact recreation draft definition: Water recreation activities, such as wading by children, swimming, water skiing, diving, tubing, surfing, and whitewater kayaking, canoeing, and rafting, involving a significant risk of ingestion of water.

1. Were water recreation activities that involve a significant risk of ingestion (full body immersion) observed at this site?
☐ Yes ☒ No primary contact recreation activities were observed
a. Check the following boxes of primary contact recreation activities observed at the time of the sampling event at the site (Attach photos of the activities or lack of activities).

☐ Wading-Children ☐ Tubing ☒ No primary contact activities that commonly occur were observed
☐ Wading-Adults ☐ Surfing
☐ Swimming ☐ Whitewater-kayaking, canoeing, rafting
☐ Water skiing ☐ Other: _____
☐ Diving ☐ frequent public swimming-created by publicly owned land or commercial operations

b. Check the number of individuals observed at the site: ☒ None ☐ 1-10 ☐ 11-20 ☐ 20-50 ☐ greater than 50

c. Check the following that apply regarding the individuals proximity to the water body.
☐ Water in mouth or nose of the individual ☐ Primary touch: Individual's body (or portion) immersed in water
☐ Secondary touch: fishing, pets and related contact with water ☐ Individual is in a boat touching water
☐ Individual is on shore near water within 8 meters (25ft) of water ☐ Individual is well away from water between 8 and 30 meters (100 ft) ☒ Not applicable

2. If primary contact recreation activities are not observed, describe the physical characteristics of the water body that may hinder the frequency of primary contact (depth, etc.) (Attach photos, etc. for documentation).
Too shallow, tall grass in water, the segment is fenced off, both upstream & down stream of the bridge

3. Describe if there is public access (e.g. parks, roads, etc.) (Attach photos, maps, etc. for documentation).
Road (FM 1301), bridge.

4. Is an area with primary contact recreation activities or a bathing beach (e.g. state/local parks with swimming, etc.) located near (e.g. within 5 miles upstream and downstream) this site? No

C. Secondary Contact Water Recreation Evaluation:
- Secondary contact recreation 1: Water recreation activities, such as fishing, commercial and recreational boating, and limited body contact incidental to shoreline activity, not involving a significant risk of water ingestion and that commonly occur.
- Secondary contact recreation 2: Water recreation activities, such as fishing, commercial and recreational boating, and limited body contact incidental to shoreline activity, not involving a significant risk of water ingestion but that occur less frequently than for secondary contact recreation 1 due to (1) physical characteristics of the water body and/or (2) limited public access.

1. Were water recreation activities observed at the site, but the nature of the recreation does not involve a significant risk of ingestion (e.g. secondary contact recreation activities)? ☐ Yes ☒ No secondary contact recreation activities were observed
a. Check the following boxes of secondary contact recreation activities that were observed at the time of the sampling event at the site (Attach photos of activities or lack of activities).
☐ Fishing
☐ Boating-commercial, recreational
☐ Non-whitewater-kayaking, rafting, canoeing
☒ No secondary contact recreation activities were observed
☐ Other secondary contact activities: _____

Field Data Sheets – Basic RUAA Survey

Stream Name Caney Creek above tidal Site: 10
Date: 04/03/10 Time: 12:34

b. Check the number of individuals observed at the site.
☑ None ☐ 1-10 ☐ 11-20 ☐ 20-50 ☐ greater than 50

c. Check the following that apply regarding the individuals proximity to the water body.
☐ Secondary touch: fishing, pets and related contact with water ☐ In a boat touching water
☐ Body on shore near water within 8 meters (25ft) of water ☐ Body well away from water between 8 and 30 meters (100 ft) NA

2. If secondary contact recreation activities are not observed, describe the physical characteristics of the water body that may hinder the frequency of secondary contact (Attach photos, etc. for documentation).
Same as before

3. If secondary contact recreation activities are observed, how often do water recreational activities occur that do not involve a significant risk of water ingestion? ☐ frequently ☐ infrequently NA
Please describe how often the activities occur? ☐ Unknown ☐ Never ☐ Daily ☐ Monthly ☐ Yearly

4. If infrequently, what is the reason? ☐ physical characteristics of the water body ☐ limited public access ☐ other
If other, list reasons: NA

5. Describe the physical characteristics of the water body that hinders the frequency of secondary contact recreation (depth, etc.) (Attach photos or depth measurements, etc. for documentation).
Same as before

6. Describe why there is limited public access (e.g. lack of roads, river or stream banks overgrown, etc.) (Attach photos, maps, etc. for documentation).
~~the~~ stream fenced off both upsteam & downsteam of the bridge.

D. Noncontact Recreation Evaluation

Noncontact recreation applies to water bodies where recreation activities do not involve a significant risk of water ingestion, and where primary and secondary contact recreation uses do not occur because of unsafe conditions, such as barge traffic.

1. Provide site-specific information and documentation (including photographs) regarding unsafe conditions, recreation activities, and presence or absence of water recreation activities.

Field Data Sheets – Basic RUAA Survey

Stream Name Caney Creek above tidal Site: 10
Date: 4-3-2010 FDS Page 3 of 8 Time: 12:34

E. Stream Channel and Substantial Pools
Please check the following which best describes the river or stream: ☑ Wadeable ☐ Non-wadeable

1. Wadeable Streams
Determine whether or not the average depth at the thalweg is greater than 0.5 meters and if there are substantial pools with a depth of 1 meter or greater. Walk an approximately 300 meter reach (total) at the site and take the following measurements within the 300 meter reach. Measurements should be taken during base flow conditions (sustained or typical dry, warm-weather flows between rainfall events, excluding unusual antecedent conditions of drought or wet weather

Also, take photos facing upstream, downstream, left bank, and right bank at the 30 meters, 150 meters, and 300 meters. 10
Photos #s (~~30~~ meters) Upstream ✓ Downstream ✓ Left Bank ✓ Right Bank ✓
23m Photos #s (~~150~~ meters) Upstream ✓ Downstream ✓ Left Bank ✓ Right Bank ✓
Photos #s (300 meters) Upstream____ Downstream____ Left Bank ____ Right Bank____
additional photo taken downstream

Pictures also taken upstream of fence – walking path on right back.

a) Substantial pools - Measure the length of each pool (if > 10 pools only measure 10 pools), the width (at the widest point), and the deepest depth. A substantial pool is considered a pool greater than 10 meters in length for the purposes of a Basic RUAA Survey. If depth and/or width measurements were not attainable, explain why.

	Length (meters)	Width (meters)	Depth (meters)
Pool 1			
Pool 2			
Pool 3			
Pool 4			
Pool 5			
Pool 6			
Pool 7			
Pool 8			
Pool 9			
Pool 10			

b)Average depth at the thalweg –Take depth measurements approximately every 30 meters to calculate an average depth at the thalweg (at least 10 measurements needed). If depth and/or width measurements were not attainable, explain why.

Total length 28.2m

Distance	Depth (meters)	
~~30~~ meters 23m 5m.	0.48'	0.146
60 meters 10m	0.55'	0.168
90 meters 16m	0.66'	0.201
120 meters 23m	0.7'	0.213
150 meters		
180 meters		
210 meters		
240 meters		
270 meters		
300 meters		
Average	0.182	

upstream of bridge

Field Data Sheets – Basic RUAA Survey

Stream Name Caney Creek above tidal Site: 8 10
Date: 4-3-2010 Time: 12:34

c) Stream width - Measure (1) the width at one point which represents the typical average width of the 300 meter reach; (2) the width at the narrowest point of the stream within the 300 meter reach; and (3) the width at the widest point of the stream within the 300 meter reach.

Measurement Type	Width (meters)
Typical Average Width of 300 meter reach	5.3 m
Width at narrowest point of the stream within 300 meter reach	3.41m
Width at the widest point of the stream within 300 meter reach	6.33m

creek is wider beyond the fence.

d) Is there sufficient water within a 300 meter stream reach during base flow conditions to support primary contact recreation? ☐ Yes ☑ No
COMMENTS:

2. Non-wadeable Streams
If accessible, take 10 width measurements which represent typical widths of the 300 meter reach. If the water is too deep and not accessible record the estimated average width of the water body.

Also, take photos facing upstream, downstream, left bank, and right bank at .
Photos #s (30 meters) Upstream____ Downstream____ Left Bank ____ Right Bank____
Photos #s (150 meters) Upstream____ Downstream____ Left Bank ____ Right Bank____
Photos #s (300 meters) Upstream____ Downstream____ Left Bank ____ Right Bank____

# Measurements	Width (meters)
1	
2	
3	
4	
5	
6	
7	
8	
9	
10	

Field Data Sheets – Basic RUAA Survey

Stream Name: Caney Creek above tidal Site: 10
Date: 04/03/10 Time: 12:34

F. Additional RUAA Information

1. Check the following activities observed over the site reach.

- ☐ Drinking or water in mouth
- ☐ Bathing
- ☐ Walking
- ☐ Jogging/running
- ☐ Bicycling
- ☐ Standing
- ☐ Sitting
- ☐ Lying down/sleeping
- ☐ Playing on shoreline
- ☐ Picnicking
- ☐ Motorcycle/ATV
- ☐ Hunting/Trapping
- ☐ Wildlife watching
- ☒ None
- ☐ Other: _____

2. Are there permanent or long-term hydrologic modifications that are constructed and operated in a way that affects the recreational uses? ☒ Yes ☐ No (If yes, please provide supporting documentation and photos.)

Comments: bridge.

3. Check any channel obstructions that apply (Attach photos).

- ☐ Culverts
- ☒ Barbed wire
- ☐ Utility pipe
- ☐ Fences
- ☐ Dams
- ☐ Other (specify): _____
- ☐ Log jams
- ☐ Thick vegetation
- ☐ Rip rap
- ☐ Low bridges
- ☐ Water control structure
- ☐ None

4. Check all surrounding conditions that promote recreational activities (Attach photos of evidence or unusual items of interest).

- ☐ Campgrounds
- ☐ Playgrounds
- ☐ Rural area
- ☒ Residential
- ☐ National forests
- ☐ Urban/suburban location
- ☐ Golf Course
- ☐ Sports Field
- ☐ Stairs/walkway
- ☐ Boating access (ramps)
- ☐ Beach
- ☒ Bridge crossing
- ☐ Commercial boating
- ☒ Trails/paths (hiking/biking)
- ☐ Paved parking lot
- ☐ Unimproved parking lot
- ☒ Roads (paved/unpaved)
- ☐ Populated area
- ☐ Docks or rafts
- ☐ Commercial outfitter
- ☐ Nearby school
- ☐ Power Line Corridor
- ☐ Parks (national/city/county/state)
- ☐ Public Property
- ☐ Other: _____
- ☐ None of the Above

Comments: _____

5. Check all surrounding conditions that impede recreational activities (Attach photos of evidence or unusual items of interest).

- ☐ Private Property
- ☐ No trespass sign
- ☐ Wildlife
- ☐ Steep slopes
- ☐ No public access
- ☐ No roads
- ☒ Fence
- ☐ Barge/ship traffic
- ☐ Industrial
- ☐ None of the Above
- ☐ Other: _____

Comments: _____

6. Check any indications of human use (Attach photos).

- ☒ Roads
- ☐ Rope swings
- ☐ Dock/platform
- ☐ Foot paths/prints
- ☐ Other: _____
- ☐ RV/ATV Tracks
- ☐ Camping Sites
- ☐ Fire pit/ring
- ☐ Fishing Tackle
- ☐ NPDES Discharge
- ☐ Gates on corridor
- ☐ Children's toys
- ☐ Remnant's of Kid's play
- ☐ Organized event
- ☐ No Human Presence

Comments: _____

Field Data Sheets – Basic RUAA Survey

Stream Name: Caney Creek above tidal Site: 10
Date: 04/03/10 Time: 12:34

7. Check all water characteristics that apply (Attach photos).
Aquatic Vegetation: ☐ absent ☐ rare ☒ common ☐ abundant
Algae Cover: ☐ absent ☒ rare ☐ common ☐ abundant
Odor: ☒ none ☐ rare ☐ common ☐ abundant
Color: ☒ clear ☐ green ☐ red ☐ brown ☐ black
Bottom Deposit: ☐ sludge ☐ solids ☒ fine sediments ☐ none ☐ other
Water Surface: ☒ clear ☐ scum ☐ foam ☐ debris ☐ oil
Other:

8. Vertebrates Observed within 300 meter reach

Snakes	☒ None	☐ slight presence	☐ moderate presence	☐ large presence
Water Dependent Birds	☒ None	☐ slight presence	☐ moderate presence	☐ large presence
Alligators	☒ None	☐ slight presence	☐ moderate presence	☐ large presence

Comments:

9. Mammals Observed within 300 meter reach

Wild	☒ None	☐ slight presence	☐ moderate presence	☐ large presence
Domesticated Pets	☐ None	☒ slight presence	☐ moderate presence	☐ large presence
Livestock	☒ None	☐ slight presence	☐ moderate presence	☐ large presence
Feral Hogs	☒ None	☐ slight presence	☐ moderate presence	☐ large presence

Comments:

10. Evidence of wild animals or evidence of birds, cattle, hogs, etc.
☒ Tracks ☐ Fecal droppings ☐ Bird nests

11. Garbage Observed

Large garbage in the channel	☒ None	☒ Rare	☐ Common	☐ Abundant
Small garbage in the channel	☐ None	☒ Rare	☐ Common	☐ Abundant
Bank Garbage	☐ None	☐ Rare	☒ Common	☐ Abundant

PC

Briefly describe the kinds of garbage observed: Paper, beer can, plastic bottles, cups, plastic bag., tire

12. Is the site located in a wildlife preserve with large wildlife (i.e waterfowl) population? ☐ Yes ☒ No

13. Please document any other relevant information regarding recreational activities and the water body in general (for example, area outside of the stream reach evaluated).

Can survey only upto 200 ft ~~up~~ under the bridge - both upstream & downstream (barbed wire fenced.

Field Data Sheet - Basic RUAA Survey

Stream Flow (Discharge) Measurement

Stream: Caney Creek above tidal Date: 04/03/10

Site: 10 Site

Description: FM 1301 @ Caney Creek

Time Begin: 12:43 Time End: 12:55 Meter Type: Sontek Flowtracker

Observers: P. Lokanath, M. Franks Stream Width*: 9.3 Section Width (W): 0.93

Observations:

	Section Midpoint (ft)(m)	Section Depth (ft)(m) (cm) (D)	Observational Depth** (ft)(m)	Velocity (V) At Point (ft/s)(m/s)	Velocity (V) Average (ft/s)(m/s)	Flow (Q) (m^3/s)(ft^3/s) Q = (W)(D)(V)	Flow cfs
						KC 10/27/10	
	0.465	0.2			0.00	~~0.00~~	0.000
	1.395	0.4			0.00	~~0.00~~	0.000
	2.325	0.6			-0.4	~~-0.6~~ -0.4	-0.022
3.255	~~1.86~~	0.6			0.57	~~0.57~~	0.318
4.185	~~2.79~~	0.6			0.00	~~0.00~~	0.000
5.115	~~1.86~~	0.6			0.00	~~0.00~~	0.000
6.045	~~2.7~~	0.7			-0.14	~~-0.14~~	-0.091
6.975		0.7			0.00	~~0.00~~	0.000
	7.905	0.7			0.00	~~0.00~~	0.000
	8.835	0.4			0.00	~~0.00~~	0.000

KC 10/27/10

Q = ~~0.004~~ cfs

0.205

E MFS

Field Data Sheets – Basic RUAA Survey

(should be completed for each site)

Data Collectors & Contact Information:	P. Lokanath, M. Fruenks, C. Gauthier, M. Shepard
Date & Time: 04/03/10 13:18-16:18	County Name: Matagorda
Stream Name: Caney Creek above tidal	
Segment No. or nearest downstream Segment No.: 1305	
Description of Site: Stubblefield Rd @ Caney Creek	

At any point during the Basic RUAA Survey it becomes apparent that primary contact recreation is clearly the use for the water body the investigator should stop conducting the UAA.

A. Stream Characteristics:

1. Check the following channel flow status that applies.

☐ dry ☐ no flow ☐ low ☒ normal ☐ high ☐ flooded

2. Check the following stream type that applies on the day of the survey:

Ephemeral: A stream which flows only during or immediately after a rainfall event, and contains no refuge pools capable of sustaining a viable community of aquatic organisms.

☐ Intermittent: A stream which has a period of zero flow for at least one week during most years. Where flow records are available, a stream with a 7Q2 flow of less than 0.1 cubic feet per second is considered intermittent.

☐ Intermittent w/ perennial pools: An intermittent stream which maintains persistent pools even when flow in the stream is less than 0.1 cubic feet per second.

☒ Perennial: A stream which flows continuously throughout the year. Perennial streams have a 7Q2 equal to or greater than 0.1 cubic feet per second.

☐ Designated or unclassified tidal stream: A stream that is tidally influenced. If you checked this box, you will need to contact the Water Quality Standards Group and evaluate whether or not a bathing beach is located along the tidal stream and whether or not a bathing beach is located along the estuary, bay or Gulf water that the tidal stream flows into.

3. Streamflow

Use USGS gage data (if a gage is located at a site or within a quarter mile of a site) or use the Stream Flow (Discharge) Measurement Form and follow the procedures outlined in the most recent TCEQ Surface Water Quality Monitoring Procedures, Volume 1, RG-415. If USGS gage data is used for a site, include that information as an attachment and list the streamflow on the sampling date below. If the stream flow taken at one site is representative of the flow at another site(s), then that flow can be used as the observed flow and should be documented below. If the stream flow measured at one site is different from another site, then stream flow should be taken at both sites. -0.567 cfs

4. Water Quality Data (Field Parameters)

Field parameters should be collected in accordance with the procedures outlined in the most recent TCEQ Surface Water Quality Monitoring Procedures, Volume 1.

Air Temp 32 °C Water Temp 21.5 °C Secchi 0.48 m

5. Riparian Zone (Mark dominant categories with L (Left Bank) and R (Right Bank). Bank orientation is determined by the investigator facing downstream.)

____ Forest	____ Urban	____ Rip rap
____ Shrub dominated corridor	L/R Pasture	____ Concrete
____ Herbaceous marsh	____ Row crops	Other (specify): ____
____ Mowed/maintained corridor	____ Denuded/Eroded bank	

6. Ease of bank access to the water body: ☐ Easy ☒ Moderately easy ☐ Moderately difficult ☐ Difficult

7. Please describe access opportunities or explain why the site is not easily accessible (Attach photos for documentation):

unpaved road, ~~p~~ Segment within fenced (wooden) area but no signs on the fence (might be private property)

8. Dominant Primary Substrate

☐ Cobble ☐ Sand ☒ Silt ☐ Mud/Clay ☐ Gravel ☐ Bedrock ☐ Rip rap ☐ Concrete

QKC EPC

Field Data Sheets – Basic RUAA Survey

Stream Name Caney Creek above tidal Site: 11
Date: 04/03/10 Time: 13:18

B. Primary Contact Water Recreation Evaluation:
- Primary contact recreation draft definition: Water recreation activities, such as wading by children, swimming, water skiing, diving, tubing, surfing, and whitewater kayaking, canoeing, and rafting, involving a significant risk of ingestion of water.

1. Were water recreation activities that involve a significant risk of ingestion (full body immersion) observed at this site?
☐ Yes ☒ No primary contact recreation activities were observed
a. Check the following boxes of primary contact recreation activities observed at the time of the sampling event at the site (Attach photos of the activities or lack of activities).

☐ Wading-Children	☐ Tubing	☒ No primary contact activities that commonly occur were observed
☐ Wading-Adults	☐ Surfing	
☐ Swimming	☐ Whitewater-kayaking, canoeing, rafting	
☐ Water skiing	☐ Other: _____	
☐ Diving	☐ frequent public swimming-created by publicly owned land or commercial operations	

b. Check the number of individuals observed at the site: ~~☒ None~~ ☒ 1-10 ☐ 11-20 ☐ 20-50 ☐ greater than 50
KC 4/26/10

c. Check the following that apply regarding the individuals proximity to the water body.
☐ Water in mouth or nose of the individual ☐ Primary touch: Individual's body (or portion) immersed in water
☐ Secondary touch: fishing, pets and related contact with water ☐ Individual is in a boat touching water
☐ Individual is on shore near water within 8 meters (25ft) of water ☒ Individual is well away from water between 8 and 30 meters (100 ft) ~~☒ Not applicable~~ KC

2. If primary contact recreation activities are not observed, describe the physical characteristics of the water body that may hinder the frequency of primary contact (depth, etc.) (Attach photos, etc. for documentation).
Too shallow, ~~too~~ lot of sticks in the water

3. Describe if there is public access (e.g. parks, roads, etc.) (Attach photos, maps, etc. for documentation).
unpaved road, ~~up~~ unpaved bridge segment within Fenced area (may be private)

4. Is an area with primary contact recreation activities or a bathing beach (e.g. state/local parks with swimming, etc.) located near (e.g. within 5 miles upstream and downstream) this site? NO

C. Secondary Contact Water Recreation Evaluation:
- Secondary contact recreation 1: Water recreation activities, such as fishing, commercial and recreational boating, and limited body contact incidental to shoreline activity, not involving a significant risk of water ingestion and that commonly occur.
- Secondary contact recreation 2: Water recreation activities, such as fishing, commercial and recreational boating, and limited body contact incidental to shoreline activity, not involving a significant risk of water ingestion but that occur less frequently than for secondary contact recreation 1 due to (1) physical characteristics of the water body and/or (2) limited public access.

1. Were water recreation activities observed at the site, but the nature of the recreation does not involve a significant risk of ingestion (e.g. secondary contact recreation activities)? ☐ Yes ☒ No secondary contact recreation activities were observed
a. Check the following boxes of secondary contact recreation activities that were observed at the time of the sampling event at the site (Attach photos of activities or lack of activities).
☐ Fishing
☐ Boating-commercial, recreational
☐ Non-whitewater-kayaking, rafting, canoeing
☒ No secondary contact recreation activities were observed
☐ Other secondary contact activities: _____

Field Data Sheets – Basic RUAA Survey

Stream Name Caney Creek above tidal Site: 11
Date: 04/03/10 Time: 13:18

b. Check the number of individuals observed at the site.
☐ None ☒ 1-10 ☐ 11-20 ☐ 20-50 ☐ greater than 50

c. Check the following that apply regarding the individuals proximity to the water body.
☐ Secondary touch: fishing, pets and related contact with water ☐ In a boat touching water
☐ Body on shore near water within 8 meters (25ft) of water ☒ Body well away from water between 8 and 30 meters (100 ft)

2. If secondary contact recreation activities are not observed, describe the physical characteristics of the water body that may hinder the frequency of secondary contact (Attach photos, etc. for documentation).

Same as before

3. If secondary contact recreation activities are observed, how often do water recreational activities occur that do not involve a significant risk of water ingestion? ☐ frequently ☐ infrequently NA
Please describe how often the activities occur? ☐ Unknown ☐ Never ☐ Daily ☐ Monthly ☐ Yearly

4. If infrequently, what is the reason? ☐ physical characteristics of the water body ☐ limited public access ☐ other
If other, list reasons: NA

5. Describe the physical characteristics of the water body that hinders the frequency of secondary contact recreation (depth, etc.) (Attach photos or depth measurements, etc. for documentation).

Same as before

6. Describe why there is limited public access (e.g. lack of roads, river or stream banks overgrown, etc.) (Attach photos, maps, etc. for documentation).

Stream within fenced area

D. Noncontact Recreation Evaluation

Noncontact recreation applies to water bodies where recreation activities do not involve a significant risk of water ingestion, and where primary and secondary contact recreation uses do not occur because of unsafe conditions, such as barge traffic.

1. Provide site-specific information and documentation (including photographs) regarding unsafe conditions, recreation activities, and presence or absence of water recreation activities.

Field Data Sheets – Basic RUAA Survey

Stream Name Caney Creek above tidal Site: 11
Date: 4-3-2010 FDS Page 3 of 8 Time: 13:18

E. Stream Channel and Substantial Pools
Please check the following which best describes the river or stream: ✓ Wadeable ☐ Non-wadeable

1. Wadeable Streams
Determine whether or not the average depth at the thalweg is greater than 0.5 meters and if there are substantial pools with a depth of 1 meter or greater. Walk an approximately 300 meter reach (total) at the site and take the following measurements within the 300 meter reach. Measurements should be taken during base flow conditions (sustained or typical dry, warm-weather flows between rainfall events, excluding unusual antecedent conditions of drought or wet weather

Also, take photos facing upstream, downstream, left bank, and right bank at the 30 meters, 150 meters, and 300 meters.
Photos #s (30 meters) Upstream ✓ Downstream ✓ Left Bank ✓ Right Bank ✓ took 2 of R bank
Photos #s (150 meters) Upstream ✓ Downstream ✓ Left Bank ✓ Right Bank ✓ took 2 of L bank
Photos #s (300 meters) Upstream ✓ Downstream ✓ Left Bank ✓ Right Bank ✓

a) Substantial pools - Measure the length of each pool (if > 10 pools only measure 10 pools), the width (at the widest point), and the deepest depth. A substantial pool is considered a pool greater than 10 meters in length for the purposes of a Basic RUAA Survey. If depth and/or width measurements were not attainable, explain why.

N/A

	Length (meters)	Width (meters)	Depth (meters)
Pool 1			
Pool 2			
Pool 3			
Pool 4			
Pool 5			
Pool 6			
Pool 7			
Pool 8			
Pool 9			
Pool 10			

b)Average depth at the thalweg –Take depth measurements approximately every 30 meters to calculate an average depth at the thalweg (at least 10 measurements needed). If depth and/or width measurements were not attainable, explain why.

Distance	Depth (meters)	
30 meters	1.5'	0.457 m
60 meters	2.08'	0.634 m
90 meters	1.9'	0.579 m
120 meters	2.22'	0.677 m
150 meters	2.52'	0.768 m
180 meters	1.9'	0.579 m
210 meters	1.66'	0.506 m
240 meters	1.74'	0.530 m
270 meters	1.58'	0.481 m
300 meters	1.36'	0.414 m
Average		0.563 m

bridge

Field Data Sheets – Basic RUAA Survey

Stream Name Caney Creek above tidal Site: 11
Date: 4-3-2010 Time: 13:18

c) Stream width - Measure (1) the width at one point which represents the typical average width of the 300 meter reach; (2) the width at the narrowest point of the stream within the 300 meter reach; and (3) the width at the widest point of the stream within the 300 meter reach.

Measurement Type	Width (meters)
Typical Average Width of 300 meter reach	45.8' 13.96 m
Width at narrowest point of the stream within 300 meter reach	16.9' 5.15 m
Width at the widest point of the stream within 300 meter reach	20.9m

d) Is there sufficient water within a 300 meter stream reach during base flow conditions to support primary contact recreation? ☑ Yes ☑ No → PL

COMMENTS: lots of sticks, water sufficient for children to wade but too shallow to swim

2. Non-wadeable Streams N/A

If accessible, take 10 width measurements which represent typical widths of the 300 meter reach. If the water is too deep and not accessible record the estimated average width of the water body.

Also, take photos facing upstream, downstream, left bank, and right bank at .
Photos #s (30 meters) Upstream____ Downstream____ Left Bank ____ Right Bank____
Photos #s (150 meters) Upstream____ Downstream____ Left Bank ____ Right Bank____
Photos #s (300 meters) Upstream____ Downstream____ Left Bank ____ Right Bank____

# Measurements	Width (meters)
1	
2	
3	
4	
5	
6	
7	
8	
9	
10	

Field Data Sheets – Basic RUAA Survey

Stream Name Caney Creek above tidal Site: 11
Date: 04/03/10 Time: 13:18

F. Additional RUAA Information

1. Check the following activities observed over the site reach.

- ☐ Drinking or water in mouth
- ☐ Bathing
- ☒ Walking
- ☐ Jogging/running
- ☐ Bicycling
- ☐ Standing
- ☐ Sitting
- ☐ Lying down/sleeping
- ☐ Playing on shoreline
- ☐ Picnicking
- ☐ Motorcycle/ATV
- ☐ Hunting/Trapping
- ☐ Wildlife watching
- ☐ None
- ☐ Other: _____

2. Are there permanent or long-term hydrologic modifications that are constructed and operated in a way that affects the recreational uses? ☒ Yes ☐ No. (If yes, please provide supporting documentation and photos.)
Comments: _____

3. Check any channel obstructions that apply (Attach photos).

- ☒ Culverts
- ☒ Barbed wire
- ☐ Utility pipe
- ☐ Fences
- ☐ Dams
- ☐ Other (specify): _____
- ☐ Log jams
- ☐ Thick vegetation
- ☐ Rip rap
- ☐ Low bridges
- ☐ Water control structure
- ☐ None

4. Check all surrounding conditions that promote recreational activities (Attach photos of evidence or unusual items of interest).

- ☐ Campgrounds
- ☐ Playgrounds
- ☒ Rural area
- ☒ Residential
- ☐ National forests
- ☐ Urban/suburban location
- ☐ Golf Course
- ☐ Sports Field
- ☐ Stairs/walkway
- ☐ Boating access (ramps)
- ☐ Beach
- ☒ Bridge crossing
- ☐ Commercial boating
- ☐ Trails/paths (hiking/biking)
- ☐ Paved parking lot
- ☐ Unimproved parking lot
- ☒ Roads (paved/unpaved)
- ☐ Populated area
- ☐ Docks or rafts
- ☐ Commercial outfitter
- ☐ Nearby school
- ☐ Power Line Corridor
- ☐ Parks (national/city/county/state)
- ☐ Public Property
- ☐ Other: _____
- ☐ None of the Above

Comments: _____

5. Check all surrounding conditions that impede recreational activities (Attach photos of evidence or unusual items of interest).

- ☐ Private Property
- ☐ No trespass sign
- ☐ Wildlife
- ☐ Steep slopes
- ☐ No public access
- ☐ No roads
- ☒ Fence
- ☐ Barge/ship traffic
- ☐ Industrial
- ☐ None of the Above
- ☐ Other: _____

Comments: _____

6. Check any indications of human use (Attach photos).

- ☒ Roads
- ☐ Rope swings
- ☐ Dock/platform
- ☐ Foot paths/prints
- ☐ Other: _____
- ☐ RV/ATV Tracks
- ☐ Camping Sites
- ☐ Fire pit/ring
- ☐ Fishing Tackle
- ☐ NPDES Discharge
- ☐ Gates on corridor
- ☐ Children's toys
- ☐ Remnant's of Kid's play
- ☐ Organized event
- ☐ No Human Presence

Comments: _____

Field Data Sheets – Basic RUAA Survey

Stream Name Caney Creek above tidal Site: 11
Date: 04/03/10 Time: 13:18

7. Check all water characteristics that apply (Attach photos).
Aquatic Vegetation: ☐ absent ☐ rare ☒ common ☐ abundant
Algae Cover: ☒ absent ☐ rare ☐ common ☐ abundant
Odor: ☒ none ☐ rare ☐ common ☐ abundant
Color: ☐ clear ☐ green ☐ red ☒ brown ☐ black
Bottom Deposit: ☐ sludge ☐ solids ☒ fine sediments ☐ none ☐ other
Water Surface: ☒ clear ☐ scum ☐ foam ☐ debris ☐ oil
Other:

8. Vertebrates Observed within 300 meter reach

Snakes	☒ None	☐ slight presence	☐ moderate presence	☐ large presence
Water Dependent Birds	☒ None	☐ slight presence	☐ moderate presence	☐ large presence
Alligators	☒ None	☐ slight presence	☐ moderate presence	☐ large presence

Comments:

9. Mammals Observed within 300 meter reach

Wild	☒ None	☐ slight presence	☐ moderate presence	☐ large presence
Domesticated Pets	☐ None	☒ slight presence	☐ moderate presence	☐ large presence
Livestock	☐ None	☒ slight presence	☐ moderate presence	☐ large presence
Feral Hogs	☒ None	☐ slight presence	☐ moderate presence	☐ large presence

Comments:

10. Evidence of wild animals or evidence of birds, cattle, hogs, etc.
☒ Tracks ☐ Fecal droppings ☐ Bird nests

11. Garbage Observed

Large garbage in the channel	☐ None	☒ Rare	☐ Common	☐ Abundant
Small garbage in the channel	☐ None	☒ Rare	☐ Common	☐ Abundant
Bank Garbage	☐ None	☒ Rare	☐ Common	☐ Abundant

Briefly describe the kinds of garbage observed: plastic bags, beer cans

12. Is the site located in a wildlife preserve with large wildlife (i.e waterfowl) population? ☐ Yes ☒ No

13. Please document any other relevant information regarding recreational activities and the water body in general (for example, area outside of the stream reach evaluated).

Field Data Sheets – Basic RUAA Survey

(should be completed for each site)

Data Collectors & Contact Information:	P. Lollemeth, C. Gauthier, M. Franks, M. Shepard
Date & Time: 04/03/10 14:37-15:10	County Name: Matagorda
Stream Name: Caney Creek above tidal	
Segment No. or nearest downstream Segment No.: 1305	
Description of Site: CR 105 @ Caney Creek	

At any point during the Basic RUAA Survey it becomes apparent that primary contact recreation is clearly the use for the water body the investigator should stop conducting the UAA.

A. Stream Characteristics:

1. Check the following channel flow status that applies.
dry ☐ no flow ☒ low ☐ normal ☐ high ☐ flooded

2. Check the following stream type that applies on the day of the survey:
Ephemeral: A stream which flows only during or immediately after a rainfall event, and contains no refuge pools capable of sustaining a viable community of aquatic organisms.
☐ Intermittent: A stream which has a period of zero flow for at least one week during most years. Where flow records are available, a stream with a 7Q2 flow of less than 0.1 cubic feet per second is considered intermittent.
☐ Intermittent w/ perennial pools: An intermittent stream which maintains persistent pools even when flow in the stream is less than 0.1 cubic feet per second.
☒ Perennial: A stream which flows continuously throughout the year. Perennial streams have a 7Q2 equal to or greater than 0.1 cubic feet per second.
☐ Designated or unclassified tidal stream: A stream that is tidally influenced. If you checked this box, you will need to contact the Water Quality Standards Group and evaluate whether or not a bathing beach is located along the tidal stream and whether or not a bathing beach is located along the estuary, bay or Gulf water that the tidal stream flows into.

3. Streamflow
Use USGS gage data (if a gage is located at a site or within a quarter mile of a site) or use the Stream Flow (Discharge) Measurement Form and follow the procedures outlined in the most recent TCEQ Surface Water Quality Monitoring Procedures, Volume 1, RG-415. If USGS gage data is used for a site, include that information as an attachment and list the streamflow on the sampling date below. If the stream flow taken at one site is representative of the flow at another site(s), then that flow can be used as the observed flow and should be documented below. If the stream flow measured at one site is different from another site, then stream flow should be taken at both sites. 0.179 cfs

4. Water Quality Data (Field Parameters)
Field parameters should be collected in accordance with the procedures outlined in the most recent TCEQ Surface Water Quality Monitoring Procedures, Volume 1.
Air Temp 35 °C Water Temp 30 °C Secchi 0.516 m

5. Riparian Zone (Mark dominant categories with L (Left Bank) and R (Right Bank). Bank orientation is determined by the investigator facing downstream.)

____ Forest	____ Urban	____ Rip rap
L/R Shrub dominated corridor	R Pasture	____ Concrete
____ Herbaceous marsh	____ Row crops	Other (specify): ____
____ Mowed/maintained corridor	____ Denuded/Eroded bank	

6. Ease of bank access to the water body: ☐ Easy ☒ Moderately easy ☐ Moderately difficult ☐ Difficult

7. Please describe access opportunities or explain why the site is not easily accessible (Attach photos for documentation):
unpaved road & bridge. moderately steep banks with vegetation

8. Dominant Primary Substrate
☐Cobble ☐Sand ☐Silt ☒Mud/Clay ☐Gravel ☐Bedrock ☐Rip rap ☐ Concrete

QKC EPC

Field Data Sheets – Basic RUAA Survey

Stream Name Caney Creek above tidal Site: 12
Date: 4/3/10 Time: 1437 - 1510

B. Primary Contact Water Recreation Evaluation:
- Primary contact recreation draft definition: Water recreation activities, such as wading by children, swimming, water skiing, diving, tubing, surfing, and whitewater kayaking, canoeing, and rafting, involving a significant risk of ingestion of water.

1. Were water recreation activities that involve a significant risk of ingestion (full body immersion) observed at this site?
☐ Yes ☒ No primary contact recreation activities were observed
a. Check the following boxes of primary contact recreation activities observed at the time of the sampling event at the site (Attach photos of the activities or lack of activities).

☐ Wading-Children ☐ Tubing ☒ No primary contact activities that commonly occur were observed
☐ Wading-Adults ☐ Surfing
☐ Swimming ☐ Whitewater-kayaking, canoeing, rafting
☐ Water skiing ☐ Other: _____
☐ Diving ☐ frequent public swimming-created by publicly owned land or commercial operations

b. Check the number of individuals observed at the site: ☒ None ☐ 1-10 ☐ 11-20 ☐ 20-50 ☐ greater than 50

c. Check the following that apply regarding the individuals proximity to the water body.
☐ Water in mouth or nose of the individual ☐ Primary touch: Individual's body (or portion) immersed in water
☐ Secondary touch: fishing, pets and related contact with water ☐ Individual is in a boat touching water
☐ Individual is on shore near water within 8 meters (25ft) of water ☐ Individual is well away from water between 8 and 30 meters (100 ft) ☒ Not applicable

2. If primary contact recreation activities are not observed, describe the physical characteristics of the water body that may hinder the frequency of primary contact (depth, etc.) (Attach photos, etc. for documentation).
lots of trash, lots of Duckweed on water, too shallow

3. Describe if there is public access (e.g. parks, roads, etc.) (Attach photos, maps, etc. for documentation).
unpaved road & bridge

4. Is an area with primary contact recreation activities or a bathing beach (e.g. state/local parks with swimming, etc.) located near (e.g. within 5 miles upstream and downstream) this site? No

C. Secondary Contact Water Recreation Evaluation:
- Secondary contact recreation 1: Water recreation activities, such as fishing, commercial and recreational boating, and limited body contact incidental to shoreline activity, not involving a significant risk of water ingestion and that commonly occur.
- Secondary contact recreation 2: Water recreation activities, such as fishing, commercial and recreational boating, and limited body contact incidental to shoreline activity, not involving a significant risk of water ingestion but that occur less frequently than for secondary contact recreation 1 due to (1) physical characteristics of the water body and/or (2) limited public access.

1. Were water recreation activities observed at the site, but the nature of the recreation does not involve a significant risk of ingestion (e.g. secondary contact recreation activities)? ☐ Yes ☒ No secondary contact recreation activities were observed
a. Check the following boxes of secondary contact recreation activities that were observed at the time of the sampling event at the site (Attach photos of activities or lack of activities).
☐ Fishing
☐ Boating-commercial, recreational
☐ Non-whitewater-kayaking, rafting, canoeing
☒ No secondary contact recreation activities were observed
☐ Other secondary contact activities: _____

Field Data Sheets – Basic RUAA Survey

Stream Name Caney Creek above tidal Site: 12
Date: 4/3/10 Time: 1437 - 1510

b. Check the number of individuals observed at the site.
X None ☐ 1-10 ☐ 11-20 ☐ 20-50 ☐ greater than 50

c. Check the following that apply regarding the individuals proximity to the water body.
☐ Secondary touch: fishing, pets and related contact with water ☐ In a boat touching water
☐ Body on shore near water within 8 meters (25ft) of water ☐ Body well away from water between 8 and 30 meters (100 ft) NA

2. If secondary contact recreation activities are not observed, describe the physical characteristics of the water body that may hinder the frequency of secondary contact (Attach photos, etc. for documentation).

Same as previous

3. If secondary contact recreation activities are observed, how often do water recreational activities occur that do not involve a significant risk of water ingestion? ☐ frequently ☐ infrequently NA
Please describe how often the activities occur? ☐ Unknown ☐ Never ☐ Daily ☐ Monthly ☐ Yearly

4. If infrequently, what is the reason? ☐ physical characteristics of the water body ☐ limited public access ☐ other
If other, list reasons: NA

5. Describe the physical characteristics of the water body that hinders the frequency of secondary contact recreation (depth, etc.) (Attach photos or depth measurements, etc. for documentation).

Same as before

6. Describe why there is limited public access (e.g. lack of roads, river or stream banks overgrown, etc.) (Attach photos, maps, etc. for documentation).

NA

D. Noncontact Recreation Evaluation

Noncontact recreation applies to water bodies where recreation activities do not involve a significant risk of water ingestion, and where primary and secondary contact recreation uses do not occur because of unsafe conditions, such as barge traffic.

1. Provide site-specific information and documentation (including photographs) regarding unsafe conditions, recreation activities, and presence or absence of water recreation activities.

Field Data Sheets – Basic RUAA Survey

Stream Name Caney Creek above tidal Site: 12
Date: 4-3-2010 FDS Page 3 of 8 Time: 14:37

E. Stream Channel and Substantial Pools
Please check the following which best describes the river or stream: ✓ Wadeable ☐ Non-wadeable

1. Wadeable Streams
Determine whether or not the average depth at the thalweg is greater than 0.5 meters and if there are substantial pools with a depth of 1 meter or greater. Walk an approximately 300 meter reach (total) at the site and take the following measurements within the 300 meter reach. Measurements should be taken during base flow conditions (sustained or typical dry, warm-weather flows between rainfall events, excluding unusual antecedent conditions of drought or wet weather

Also, take photos facing upstream, downstream, left bank, and right bank at the 30 meters, 150 meters, and 300 meters.
Photos #s (30 meters) Upstream ✓ Downstream ✓ Left Bank ✓ Right Bank ✓ upstream.
Photos #s (150 meters) Upstream ___ Downstream ___ Left Bank ___ Right Bank ___ bridge
Photos #s ~~(300~~ meters) Upstream ✓ Downstream ✓ Left Bank ✓ Right Bank ✓ downstream
additional pic taken of downstream fence.

a) Substantial pools - Measure the length of each pool (if > 10 pools only measure 10 pools), the width (at the widest point), and the deepest depth. A substantial pool is considered a pool greater than 10 meters in length for the purposes of a Basic RUAA Survey. If depth and/or width measurements were not attainable, explain why.

N/A

	Length (meters)	Width (meters)	Depth (meters)
Pool 1			
Pool 2			
Pool 3			
Pool 4			
Pool 5			
Pool 6			
Pool 7			
Pool 8			
Pool 9			
Pool 10			

b)Average depth at the thalweg –Take depth measurements approximately every 30 meters to calculate an average depth at the thalweg (at least 10 measurements needed). If depth and/or width measurements were not attainable, explain why.

~~N/A~~ MEB 4/3

upstream bridge downstream

Distance	Depth (meters)
30 meters	1.7' 0.518 m
60 meters	1.2' 0.366 m
~~90~~ meters	1.1' 0.335 m
120 meters	
150 meters	
180 meters	
210 meters	
240 meters	
270 meters	
300 meters	
Average	1.219 m

fence across upstream & fence with heavy trash downstream could not do full 300m.

Field Data Sheets – Basic RUAA Survey

Stream Name: Caney Creek above tidal Site: 12
Date: 4-3-2010 Time: 14:37

c) Stream width - Measure (1) the width at one point which represents the typical average width of the 300 meter reach; (2) the width at the narrowest point of the stream within the 300 meter reach; and (3) the width at the widest point of the stream within the 300 meter reach.

Measurement Type	Width (meters)
Typical Average Width of 300 meter reach	5.6 m
Width at narrowest point of the stream within 300 meter reach	4.3 m
Width at the widest point of the stream within 300 meter reach	20.9 m

d) Is there sufficient water within a 300 meter stream reach during base flow conditions to support primary contact recreation? ☑ Yes ☐ No → PL

COMMENTS:
too shallow.

2. Non-wadeable Streams N/A
If accessible, take 10 width measurements which represent typical widths of the 300 meter reach. If the water is too deep and not accessible record the estimated average width of the water body.

Also, take photos facing upstream, downstream, left bank, and right bank at .
Photos #s (30 meters) Upstream____ Downstream____ Left Bank ____ Right Bank____
Photos #s (150 meters) Upstream____ Downstream____ Left Bank ____ Right Bank____
Photos #s (300 meters) Upstream____ Downstream____ Left Bank ____ Right Bank____

# Measurements	Width (meters)
1	
2	
3	
4	
5	
6	
7	
8	
9	
10	

Field Data Sheets – Basic RUAA Survey

Stream Name Caney Creek above tidal Site: 12
Date: 4/3/10 Time: 1437-1510

F. Additional RUAA Information

1. Check the following activities observed over the site reach.

- ☐ Drinking or water in mouth
- ☐ Bathing
- ☐ Walking
- ☐ Jogging/running
- ☐ Bicycling
- ☐ Standing
- ☐ Sitting
- ☐ Lying down/sleeping
- ☐ Playing on shoreline
- ☐ Picnicking
- ☐ Motorcycle/ATV
- ☐ Hunting/Trapping
- ☐ Wildlife watching
- ☒ None
- ☐ Other: _____

2. Are there permanent or long-term hydrologic modifications that are constructed and operated in a way that affects the recreational uses? ☒ Yes ☐ No (If yes, please provide supporting documentation and photos.)

Comments: bridge

3. Check any channel obstructions that apply (Attach photos).

- ☐ Culverts
- ☒ Barbed wire
- ☐ Utility pipe
- ☐ Fences
- ☐ Dams
- ☐ Other (specify): _____
- ☐ Log jams
- ☐ Thick vegetation
- ☐ Rip rap
- ☐ Low bridges
- ☐ Water control structure
- ☐ None

4. Check all surrounding conditions that promote recreational activities (Attach photos of evidence or unusual items of interest).

- ☐ Campgrounds
- ☐ Playgrounds
- ☐ Rural area
- ☐ Residential
- ☐ National forests
- ☐ Urban/suburban location
- ☐ Golf Course
- ☐ Sports Field
- ☐ Stairs/walkway
- ☐ Boating access (ramps)
- ☐ Beach
- ☒ Bridge crossing
- ☐ Commercial boating
- ☐ Trails/paths (hiking/biking)
- ☐ Paved parking lot
- ☐ Unimproved parking lot
- ☒ Roads (paved/unpaved)
- ☐ Populated area
- ☐ Docks or rafts
- ☐ Commercial outfitter
- ☐ Nearby school
- ☐ Power Line Corridor
- ☐ Parks (national/city/county/state)
- ☐ Public Property
- ☐ Other: _____
- ☐ None of the Above

Comments: _____

5. Check all surrounding conditions that impede recreational activities (Attach photos of evidence or unusual items of interest).

- ☐ Private Property
- ☐ No trespass sign
- ☐ Wildlife
- ☐ Steep slopes
- ☐ No public access
- ☐ No roads
- ☒ Fence
- ☐ Barge/ship traffic
- ☐ Industrial
- ☐ None of the Above
- ☐ Other: _____

Comments: _____

6. Check any indications of human use (Attach photos).

- ☒ Roads
- ☐ Rope swings
- ☐ Dock/platform
- ☐ Foot paths/prints
- ☐ Other: _____
- ☐ RV/ATV Tracks
- ☐ Camping Sites
- ☐ Fire pit/ring
- ☐ Fishing Tackle
- ☐ NPDES Discharge
- ☐ Gates on corridor
- ☐ Children's toys
- ☐ Remnant's of Kid's play
- ☐ Organized event
- ☐ No Human Presence

Comments: _____

Field Data Sheets – Basic RUAA Survey

Stream Name: Caney Creek above tidal Site: 12
Date: 4/3/10 Time: 1437-1510

7. Check all water characteristics that apply (Attach photos).

Aquatic Vegetation: ☐ absent ☐ rare ☒ common ☐ abundant
Algae Cover: ☐ absent ☒ rare ☐ common ☐ abundant
Odor: ☒ none ☐ rare ☐ common ☐ abundant
Color: ☐ clear ☒ green ☐ red ☐ brown ☐ black
Bottom Deposit: ☒ sludge ☐ solids ☐ fine sediments ☐ none ☐ other
Water Surface: ☐ clear ☒ scum ☐ foam ☐ debris ☐ oil
Other: lots of duck weed on water surface.

8. Vertebrates Observed within 300 meter reach

Snakes	☒ None	☐ slight presence	☐ moderate presence	☐ large presence
Water Dependent Birds	☒ None	☐ slight presence	☐ moderate presence	☐ large presence
Alligators	☒ None	☐ slight presence	☐ moderate presence	☐ large presence

Comments: _____

9. Mammals Observed within 300 meter reach

Wild	☒ None	☐ slight presence	☐ moderate presence	☐ large presence
Domesticated Pets	☒ None	☐ slight presence	☐ moderate presence	☐ large presence
Livestock	☒ None	☐ slight presence	☐ moderate presence	☐ large presence
Feral Hogs	☒ None	☐ slight presence	☐ moderate presence	☐ large presence

Comments: _____

10. Evidence of wild animals or evidence of birds, cattle, hogs, etc.
☒ Tracks ☐ Fecal droppings ☐ Bird nests

11. Garbage Observed

Large garbage in the channel	☐ None	☐ Rare	☒ Common	☐ Abundant
Small garbage in the channel	☐ None	☐ Rare	☒ Common	☐ Abundant
Bank Garbage	☐ None	☐ Rare	☒ Common	☐ Abundant

Briefly describe the kinds of garbage observed: bones, plastic cans, plastic bags, bottles, plastic drum, bags of leaves.

12. Is the site located in a wildlife preserve with large wildlife (i.e waterfowl) population? ☐ Yes ☒ No

13. Please document any other relevant information regarding recreational activities and the water body in general (for example, area outside of the stream reach evaluated).

_____

Field Data Sheets – Basic RUAA Survey

(should be completed for each site)

Data Collectors & Contact Information:	P. Lokemath, C. Gauthier, M. Shepard, M. Franks.
Date & Time: 04/03/10 15:28 – 16:05	County Name: Matagorda
Stream Name: Caney Creek above tidal	
Segment No. or nearest downstream Segment No.: 1305	
Description of Site: FM 3156 @ Caney Creek	

At any point during the Basic RUAA Survey it becomes apparent that primary contact recreation is clearly the use for the water body the investigator should stop conducting the UAA.

A. Stream Characteristics:

1. Check the following channel flow status that applies.
☐ dry ☐ no flow ☐ low ☒ normal ☐ high ☐ flooded

2. Check the following stream type that applies on the day of the survey:
Ephemeral: A stream which flows only during or immediately after a rainfall event, and contains no refuge pools capable of sustaining a viable community of aquatic organisms.
☐ Intermittent: A stream which has a period of zero flow for at least one week during most years. Where flow records are available, a stream with a 7Q2 flow of less than 0.1 cubic feet per second is considered intermittent.
☐ Intermittent w/ perennial pools: An intermittent stream which maintains persistent pools even when flow in the stream is less than 0.1 cubic feet per second.
☒ Perennial: A stream which flows continuously throughout the year. Perennial streams have a 7Q2 equal to or greater than 0.1 cubic feet per second.
☐ Designated or unclassified tidal stream: A stream that is tidally influenced. If you checked this box, you will need to contact the Water Quality Standards Group and evaluate whether or not a bathing beach is located along the tidal stream and whether or not a bathing beach is located along the estuary, bay or Gulf water that the tidal stream flows into.

3. Streamflow
Use USGS gage data (if a gage is located at a site or within a quarter mile of a site) or use the Stream Flow (Discharge) Measurement Form and follow the procedures outlined in the most recent TCEQ Surface Water Quality Monitoring Procedures, Volume 1, RG-415. If USGS gage data is used for a site, include that information as an attachment and list the streamflow on the sampling date below. If the stream flow taken at one site is representative of the flow at another site(s), then that flow can be used as the observed flow and should be documented below. If the stream flow measured at one site is different from another site, then stream flow should be taken at both sites. 0.559 cfs

4. Water Quality Data (Field Parameters)
Field parameters should be collected in accordance with the procedures outlined in the most recent TCEQ Surface Water Quality Monitoring Procedures, Volume 1.
Air Temp 24 °C Water Temp 24.5 °C Secchi 0.762 m

5. Riparian Zone (Mark dominant categories with L (Left Bank) and R (Right Bank). Bank orientation is determined by the investigator facing downstream.)

____ Forest	____ Urban	____ Rip rap
LR Shrub dominated corridor	____ Pasture	____ Concrete
____ Herbaceous marsh	____ Row crops	Other (specify): ____
____ Mowed/maintained corridor	____ Denuded/Eroded bank	

6. Ease of bank access to the water body: ☒ Easy ☐ Moderately easy ☐ Moderately difficult ☐ Difficult

7. Please describe access opportunities or explain why the site is not easily accessible (Attach photos for documentation):
Road & bridge,

8. Dominant Primary Substrate
☐ Cobble ☐ Sand ☐ Silt ☒ Mud/Clay ☒ Gravel under the bridge ☐ Bedrock ☐ Rip rap ☐ Concrete

Q 2 ATR E KC 98 Q (M.S)

Field Data Sheets – Basic RUAA Survey

Stream Name Caney Creek above tidal Site: 13
Date: 04/03/10 Time: 15:28

B. Primary Contact Water Recreation Evaluation:
- Primary contact recreation draft definition: Water recreation activities, such as wading by children, swimming, water skiing, diving, tubing, surfing, and whitewater kayaking, canoeing, and rafting, involving a significant risk of ingestion of water.

1. Were water recreation activities that involve a significant risk of ingestion (full body immersion) observed at this site?
☐ Yes ☒ No primary contact recreation activities were observed
a. Check the following boxes of primary contact recreation activities observed at the time of the sampling event at the site (Attach photos of the activities or lack of activities).

☐ Wading-Children ☐ Tubing ☒ No primary contact activities that commonly occur were observed
☐ Wading-Adults ☐ Surfing
☐ Swimming ☐ Whitewater-kayaking, canoeing, rafting
☐ Water skiing ☐ Other: _____
☐ Diving ☐ frequent public swimming-created by publicly owned land or commercial operations

b. Check the number of individuals observed at the site: ☒ None ☐ 1-10 ☐ 11-20 ☐ 20-50 ☐ greater than 50

c. Check the following that apply regarding the individuals proximity to the water body.
☐ Water in mouth or nose of the individual ☐ Primary touch: Individual's body (or portion) immersed in water
☐ Secondary touch: fishing, pets and related contact with water ☐ Individual is in a boat touching water
☐ Individual is on shore near water within 8 meters (25ft) of water ☐ Individual is well away from water between 8 and 30 meters (100 ft) ☒ Not applicable

2. If primary contact recreation activities are not observed, describe the physical characteristics of the water body that may hinder the frequency of primary contact (depth, etc.) (Attach photos, etc. for documentation).
too shallow, upstream debris & trash in water, bottom is too soft & mucky (sinking upto knee)

3. Describe if there is public access (e.g. parks, roads, etc.) (Attach photos, maps, etc. for documentation).
road (FM 3156)

4. Is an area with primary contact recreation activities or a bathing beach (e.g. state/local parks with swimming, etc.) located near (e.g. within 5 miles upstream and downstream) this site? NO

C. Secondary Contact Water Recreation Evaluation:
- Secondary contact recreation 1: Water recreation activities, such as fishing, commercial and recreational boating, and limited body contact incidental to shoreline activity, not involving a significant risk of water ingestion and that commonly occur.
- Secondary contact recreation 2: Water recreation activities, such as fishing, commercial and recreational boating, and limited body contact incidental to shoreline activity, not involving a significant risk of water ingestion but that occur less frequently than for secondary contact recreation 1 due to (1) physical characteristics of the water body and/or (2) limited public access.

1. Were water recreation activities observed at the site, but the nature of the recreation does not involve a significant risk of ingestion (e.g. secondary contact recreation activities)? ☐ Yes ☒ No secondary contact recreation activities were observed
a. Check the following boxes of secondary contact recreation activities that were observed at the time of the sampling event at the site (Attach photos of activities or lack of activities).
☐ Fishing
☐ Boating-commercial, recreational
☐ Non-whitewater-kayaking, rafting, canoeing
☒ No secondary contact recreation activities were observed
☐ Other secondary contact activities: _____

Field Data Sheets – Basic RUAA Survey

Stream Name Caney Creek above tidal Site: 13
Date: 04/03/10 Time: 15:28

b. Check the number of individuals observed at the site.
X None ☐ 1-10 ☐ 11-20 ☐ 20-50 ☐ greater than 50

c. Check the following that apply regarding the individuals proximity to the water body.
☐ Secondary touch: fishing, pets and related contact with water ☐ In a boat touching water
☐ Body on shore near water within 8 meters (25ft) of water ☐ Body well away from water between 8 and 30 meters (100 ft)

NA

2. If secondary contact recreation activities are not observed, describe the physical characteristics of the water body that may hinder the frequency of secondary contact (Attach photos, etc. for documentation).

same as before

3. If secondary contact recreation activities are observed, how often do water recreational activities occur that do not involve a significant risk of water ingestion? ☐ frequently ☐ infrequently NA
Please describe how often the activities occur? ☐ Unknown ☐ Never ☐ Daily ☐ Monthly ☐ Yearly

4. If infrequently, what is the reason? ☐ physical characteristics of the water body ☐ limited public access ☐ other
If other, list reasons: NA

5. Describe the physical characteristics of the water body that hinders the frequency of secondary contact recreation (depth, etc.) (Attach photos or depth measurements, etc. for documentation).

same as before

6. Describe why there is limited public access (e.g. lack of roads, river or stream banks overgrown, etc.) (Attach photos, maps, etc. for documentation).

NA

D. Noncontact Recreation Evaluation

Noncontact recreation applies to water bodies where recreation activities do not involve a significant risk of water ingestion, and where primary and secondary contact recreation uses do not occur because of unsafe conditions, such as barge traffic.

1. Provide site-specific information and documentation (including photographs) regarding unsafe conditions, recreation activities, and presence or absence of water recreation activities.

Field Data Sheets – Basic RUAA Survey

Stream Name Caney Creek above tidal Site: 13
Date: 4-3-2010 FDS Page 3 of 8 Time: 15:28

E. Stream Channel and Substantial Pools
Please check the following which best describes the river or stream: ☑ Wadeable ☐ Non-wadeable

1. Wadeable Streams
Determine whether or not the average depth at the thalweg is greater than 0.5 meters and if there are substantial pools with a depth of 1 meter or greater. Walk an approximately 300 meter reach (total) at the site and take the following measurements within the 300 meter reach. Measurements should be taken during base flow conditions (sustained or typical dry, warm-weather flows between rainfall events, excluding unusual antecedent conditions of drought or wet weather

Also, take photos facing upstream, downstream, left bank, and right bank at the 30 meters, 150 meters, and 300 meters.
Photos #s (30 meters) Upstream ✓ Downstream ✓ Left Bank ✓ Right Bank ✓
Photos #s (150 meters) Upstream ✓ Downstream ✓ Left Bank ✓ Right Bank ✓
Photos #s (300 meters) Upstream ✓ Downstream ✓ Left Bank ✓ Right Bank ✓ took additional of animal tracks along the bank -

a) Substantial pools - Measure the length of each pool (if > 10 pools only measure 10 pools), the width (at the widest point), and the deepest depth. A substantial pool is considered a pool greater than 10 meters in length for the purposes of a Basic RUAA Survey. If depth and/or width measurements were not attainable, explain why.

	Length (meters)	Width (meters)	Depth (meters)
Pool 1			
Pool 2			
Pool 3			
Pool 4			
Pool 5			
Pool 6			
Pool 7			
Pool 8			
Pool 9			
Pool 10			

b)Average depth at the thalweg –Take depth measurements approximately every 30 meters to calculate an average depth at the thalweg (at least 10 measurements needed). If depth and/or width measurements were not attainable, explain why.

log jam 106.7 m

Distance	Depth (meters)	
~~30~~ meters		
~~60~~ meters		
~~90~~ meters	1.8'	0.354 m
120 meters	0.8'	0.549 m
150 meters	0.4'	0.140 m
180 meters	1.2'	0.366 m
210 meters	0.68'	0.207 m
240 meters	1.6'	0.488 m
270 meters	2.2'	0.671 m
300 meters	1.4'	0.427 m
Average		0.4 m

bridge → taken at downstream edge of bridge

Field Data Sheets – Basic RUAA Survey

Stream Name: Caney Creek above tidal Site: 13
Date: 4-3-10 Time: 15:28

c) Stream width - Measure (1) the width at one point which represents the typical average width of the 300 meter reach; (2) the width at the narrowest point of the stream within the 300 meter reach; and (3) the width at the widest point of the stream within the 300 meter reach.

Measurement Type	Width (meters)
Typical Average Width of 300 meter reach	19.8' 6.04 m
Width at narrowest point of the stream within 300 meter reach	3.3m
Width at the widest point of the stream within 300 meter reach	10.5m

d) Is there sufficient water within a 300 meter stream reach during base flow conditions to support primary contact recreation? ☐ Yes ☑ No
COMMENTS:

2. Non-wadeable Streams
If accessible, take 10 width measurements which represent typical widths of the 300 meter reach. If the water is too deep and not accessible record the estimated average width of the water body.

Also, take photos facing upstream, downstream, left bank, and right bank at .
Photos #s (30 meters) Upstream____ Downstream____ Left Bank ____ Right Bank____
Photos #s (150 meters) Upstream____ Downstream____ Left Bank ____ Right Bank____
Photos #s (300 meters) Upstream____ Downstream____ Left Bank ____ Right Bank____

# Measurements	Width (meters)
1	
2	
3	
4	
5	
6	
7	
8	
9	
10	

Field Data Sheets – Basic RUAA Survey

Stream Name Caney Creek above tidal Site: 13
Date: 04/03/10 Time: 15:28

F. Additional RUAA Information

1. Check the following activities observed over the site reach.

- ☐ Drinking or water in mouth
- ☐ Bathing
- ☐ Walking
- ☐ Jogging/running
- ☐ Bicycling
- ☐ Standing
- ☐ Sitting
- ☐ Lying down/sleeping
- ☐ Playing on shoreline
- ☐ Picnicking
- ☐ Motorcycle/ATV
- ☐ Hunting/Trapping
- ☐ Wildlife watching
- ☒ None
- ☐ Other: _____

2. Are there permanent or long-term hydrologic modifications that are constructed and operated in a way that affects the recreational uses? ☒ Yes ☐ No (If yes, please provide supporting documentation and photos.)

Comments: bridge

3. Check any channel obstructions that apply (Attach photos).

- ☐ Culverts
- ☐ Barbed wire
- ☐ Utility pipe
- ☐ Fences
- ☐ Dams
- ☐ Other (specify): _____
- ☒ Log jams
- ☐ Thick vegetation
- ☐ Rip rap
- ☐ Low bridges
- ☐ Water control structure
- ☐ None

4. Check all surrounding conditions that promote recreational activities (Attach photos of evidence or unusual items of interest).

- ☐ Campgrounds
- ☐ Playgrounds
- ☐ Rural area
- ☐ Residential
- ☐ National forests
- ☐ Urban/suburban location
- ☐ Golf Course
- ☐ Sports Field
- ☐ Stairs/walkway
- ☐ Boating access (ramps)
- ☐ Beach
- ☐ Bridge crossing
- ☐ Commercial boating
- ☐ Trails/paths (hiking/biking)
- ☐ Paved parking lot
- ☐ Unimproved parking lot
- ☒ Roads (paved/unpaved)
- ☐ Populated area
- ☐ Docks or rafts
- ☐ Commercial outfitter
- ☐ Nearby school
- ☐ Power Line Corridor
- ☐ Parks (national/city/county/state)
- ☐ Public Property
- ☐ Other: _____
- ☐ None of the Above

Comments: _____

5. Check all surrounding conditions that impede recreational activities (Attach photos of evidence or unusual items of interest).

- ☐ Private Property
- ☐ No trespass sign
- ☐ Wildlife
- ☒ Steep slopes
- ☐ No public access
- ☐ No roads
- ☐ Fence
- ☐ Barge/ship traffic
- ☐ Industrial
- ☐ None of the Above
- ☐ Other: _____

Comments: _____

6. Check any indications of human use (Attach photos).

- ☒ Roads
- ☐ Rope swings
- ☐ Dock/platform
- ☐ Foot paths/prints
- ☐ Other: _____
- ☐ RV/ATV Tracks
- ☐ Camping Sites
- ☐ Fire pit/ring
- ☐ Fishing Tackle
- ☐ NPDES Discharge
- ☐ Gates on corridor
- ☐ Children's toys
- ☐ Remnant's of Kid's play
- ☐ Organized event
- ☐ No Human Presence

Comments: _____

Field Data Sheets – Basic RUAA Survey

Stream Name Caney Creek above tidal Site: 13
Date: 04/03/10 Time: 15:28

7. Check all water characteristics that apply (Attach photos).

Aquatic Vegetation: ☐ absent ☒ rare ☐ common ☐ abundant
Algae Cover: ☒ absent ☐ rare ☐ common ☐ abundant
Odor: ☒ none ☐ rare ☐ common ☐ abundant
Color: ☐ clear ☐ green ☐ red ☒ brown ☐ black
Bottom Deposit: ☒ sludge ☐ solids ☒ fine sediments ☐ none ☐ other
Water Surface: ☒ clear ☐ scum ☐ foam ☐ debris ☐ oil
Other:

8. Vertebrates Observed within 300 meter reach

Snakes	☒ None	☐ slight presence	☐ moderate presence	☐ large presence
Water Dependent Birds	☒ None	☐ slight presence	☐ moderate presence	☐ large presence
Alligators	☒ None	☐ slight presence	☐ moderate presence	☐ large presence

Comments:

9. Mammals Observed within 300 meter reach

Wild	☒ None	☐ slight presence	☐ moderate presence	☐ large presence
Domesticated Pets	☐ None	☒ slight presence	☐ moderate presence	☐ large presence
Livestock	☒ None	☐ slight presence	☐ moderate presence	☐ large presence
Feral Hogs	☒ None	☐ slight presence	☐ moderate presence	☐ large presence

Comments:

10. Evidence of wild animals or evidence of birds, cattle, hogs, etc.
☒ Tracks ☒ Fecal droppings ☐ Bird nests

11. Garbage Observed

Large garbage in the channel	☐ None	☐ Rare	☒ Common	☐ Abundant
Small garbage in the channel	☐ None	☐ Rare	☒ Common	☐ Abundant
Bank Garbage	☐ None	☐ Rare	☒ Common	☐ Abundant

Briefly describe the kinds of garbage observed: Tire, plastic bottles glass bottles, beer can, styrofoam plates, cups, plastic bags.

12. Is the site located in a wildlife preserve with large wildlife (i.e waterfowl) population? ☐ Yes ☒ No

13. Please document any other relevant information regarding recreational activities and the water body in general (for example, area outside of the stream reach evaluated).
There was a dead cat in the stream.

Field Data Sheet - Basic RUAA Survey
Stream Flow (Discharge) Measurement

Stream: Caney Creek above tidal Date: 04/03/10
Site: 13 Site
Description: FM 3156 @ Caney Creek
Time Begin: 15:32 Time End: 15:49 Meter Type: Sontek Flowtracker
Observers: P. Lolcamath, M. Frank Stream Width*: 10 Section Width (W): 1.0
Observations:

Section Midpoint (ft)(m)	Section Depth (ft)(m) (cm) (D)	Observational Depth** (ft)(m)	Velocity (V) At Point (ft/s)(m/s)	Velocity (V) Average (ft/s)(m/s)	Flow (Q) (m^3/s)(ft^3/s) Q = (W)(D)(V)	Flow ft^3/s
					KC 10/27/10	
0.5	0.3			0.00	~~0.00~~	0.000
1.5	0.2			0.00	~~0.00~~	0.000
2.5	0.2			0.32	~~0.32~~	0.064
3.5	0.2			0.35	~~0.35~~	0.070
4.5	0.3			0.49	~~0.49~~	0.147
5.5	0.2			0.55	~~0.55~~	0.110
6.5	0.2			0.68	~~0.68~~	0.136
7.5	0.2			0.02	~~0.02~~	0.004
8.5	0.1			0.28	~~0.28~~	0.028
9.5	0.1			0.00	~~0.00~~	0.000

KC 10/27/10
Q = ~~0.585~~ cfs
0.559

R. MCS

Field Data Sheets – Basic RUAA Survey

(should be completed for each site)

Data Collectors & Contact Information: P. Lokanath, C. Gauthier, M. Franks, M. Shepard	
Date & Time: 04/03/10 1623 - 16:40	County Name: Matagorda
Stream Name: Caney Creek above tidal	
Segment No. or nearest downstream Segment No.: 1305	
Description of Site: Old Van Vleck Rd @ Caney Creek Site 14	

At any point during the Basic RUAA Survey it becomes apparent that primary contact recreation is clearly the use for the water body the investigator should stop conducting the UAA.

A. Stream Characteristics:

1. Check the following channel flow status that applies.
☐ dry ☐ no flow ☐ low ☒ normal ☐ high ☐ flooded

2. Check the following stream type that applies on the day of the survey:
☐ Ephemeral: A stream which flows only during or immediately after a rainfall event, and contains no refuge pools capable of sustaining a viable community of aquatic organisms.
☐ Intermittent: A stream which has a period of zero flow for at least one week during most years. Where flow records are available, a stream with a 7Q2 flow of less than 0.1 cubic feet per second is considered intermittent.
☐ Intermittent w/ perennial pools: An intermittent stream which maintains persistent pools even when flow in the stream is less than 0.1 cubic feet per second.
☒ Perennial: A stream which flows continuously throughout the year. Perennial streams have a 7Q2 equal to or greater than 0.1 cubic feet per second.
☐ Designated or unclassified tidal stream: A stream that is tidally influenced. If you checked this box, you will need to contact the Water Quality Standards Group and evaluate whether or not a bathing beach is located along the tidal stream and whether or not a bathing beach is located along the estuary, bay or Gulf water that the tidal stream flows into.

3. Streamflow
Use USGS gage data (if a gage is located at a site or within a quarter mile of a site) or use the Stream Flow (Discharge) Measurement Form and follow the procedures outlined in the most recent TCEQ Surface Water Quality Monitoring Procedures, Volume 1, RG-415. If USGS gage data is used for a site, include that information as an attachment and list the streamflow on the sampling date below. If the stream flow taken at one site is representative of the flow at another site(s), then that flow can be used as the observed flow and should be documented below. If the stream flow measured at one site is different from another site, then stream flow should be taken at both sites. 1.001 cfs

4. Water Quality Data (Field Parameters)
Field parameters should be collected in accordance with the procedures outlined in the most recent TCEQ Surface Water Quality Monitoring Procedures, Volume 1.
Air Temp 26 °C Water Temp 27 °C Secchi 0.21 m

5. Riparian Zone (Mark dominant categories with L (Left Bank) and R (Right Bank). Bank orientation is determined by the investigator facing downstream.)

R/L Forest	____ Urban	____ Rip rap
____ Shrub dominated corridor	____ Pasture	____ Concrete
____ Herbaceous marsh	____ Row crops	Other (specify): ____
____ Mowed/maintained corridor	____ Denuded/Eroded bank	

6. Ease of bank access to the water body: ☐ Easy ☒ Moderately easy ☐ Moderately difficult ☐ Difficult

7. Please describe access opportunities or explain why the site is not easily accessible (Attach photos for documentation):
old van vleck Road & bridge crossing, moderately steep bank slopes

8. Dominant Primary Substrate
☐ Cobble ☐ Sand ☐ Silt ☒ Mud/Clay ☐ Gravel ☐ Bedrock ☐ Rip rap ☐ Concrete

Q²DAR
QKC EPL

Field Data Sheets – Basic RUAA Survey

Stream Name Caney Creek above tidal Site: 14
Date: 04/03/10 Time: 16:23 - 16:40

B. Primary Contact Water Recreation Evaluation:
- Primary contact recreation draft definition: Water recreation activities, such as wading by children, swimming, water skiing, diving, tubing, surfing, and whitewater kayaking, canoeing, and rafting, involving a significant risk of ingestion of water.

1. Were water recreation activities that involve a significant risk of ingestion (full body immersion) observed at this site?
☐ Yes ☒ No primary contact recreation activities were observed
a. Check the following boxes of primary contact recreation activities observed at the time of the sampling event at the site (Attach photos of the activities or lack of activities).

☐ Wading-Children	☐ Tubing	☒ No primary contact activities that commonly occur were observed
☐ Wading-Adults	☐ Surfing	
☐ Swimming	☐ Whitewater-kayaking, canoeing, rafting	
☐ Water skiing	☐ Other: _____	
☐ Diving	☐ frequent public swimming-created by publicly owned land or commercial operations	

b. Check the number of individuals observed at the site: ☒ None ☐ 1-10 ☐ 11-20 ☐ 20-50 ☐ greater than 50

c. Check the following that apply regarding the individuals proximity to the water body.
☐ Water in mouth or nose of the individual ☐ Primary touch: Individual's body (or portion) immersed in water
☐ Secondary touch: fishing, pets and related contact with water ☐ Individual is in a boat touching water
☐ Individual is on shore near water within 8 meters (25ft) of water ☐ Individual is well away from water between 8 and 30 meters (100 ft) ☒ Not applicable

2. If primary contact recreation activities are not observed, describe the physical characteristics of the water body that may hinder the frequency of primary contact (depth, etc.) (Attach photos, etc. for documentation).
Too shallow under the bridge, lot of trash & dead animals in water, air smells really bad, moderately high concrete slope on the bank, too soft sinking up to knee.

3. Describe if there is public access (e.g. parks, roads, etc.) (Attach photos, maps, etc. for documentation).
Paved road & bridge.

4. Is an area with primary contact recreation activities or a bathing beach (e.g. state/local parks with swimming, etc.) located near (e.g. within 5 miles upstream and downstream) this site? NO

C. Secondary Contact Water Recreation Evaluation:
- Secondary contact recreation 1: Water recreation activities, such as fishing, commercial and recreational boating, and limited body contact incidental to shoreline activity, not involving a significant risk of water ingestion and that commonly occur.
- Secondary contact recreation 2: Water recreation activities, such as fishing, commercial and recreational boating, and limited body contact incidental to shoreline activity, not involving a significant risk of water ingestion but that occur less frequently than for secondary contact recreation 1 due to (1) physical characteristics of the water body and/or (2) limited public access.

1. Were water recreation activities observed at the site, but the nature of the recreation does not involve a significant risk of ingestion (e.g. secondary contact recreation activities)? ☐ Yes ☒ No secondary contact recreation activities were observed
a. Check the following boxes of secondary contact recreation activities that were observed at the time of the sampling event at the site (Attach photos of activities or lack of activities).
☐ Fishing
☐ Boating-commercial, recreational
☐ Non-whitewater-kayaking, rafting, canoeing
☒ No secondary contact recreation activities were observed
☐ Other secondary contact activities: _____

Field Data Sheets – Basic RUAA Survey

Stream Name Caney Creek above tidal Site: 14
Date: 04/03/10 Time: 16:23 - 16:40

b. Check the number of individuals observed at the site.
X None ☐ 1-10 ☐ 11-20 ☐ 20-50 ☐ greater than 50

c. Check the following that apply regarding the individuals proximity to the water body.
☐ Secondary touch: fishing, pets and related contact with water ☐ In a boat touching water
☐ Body on shore near water within 8 meters (25ft) of water ☐ Body well away from water between 8 and 30 meters (100 ft) NA

2. If secondary contact recreation activities are not observed, describe the physical characteristics of the water body that may hinder the frequency of secondary contact (Attach photos, etc. for documentation).
Same as before

3. If secondary contact recreation activities are observed, how often do water recreational activities occur that do not involve a significant risk of water ingestion? ☐ frequently ☐ infrequently NA
Please describe how often the activities occur? ☐ Unknown ☐ Never ☐ Daily ☐ Monthly ☐ Yearly

4. If infrequently, what is the reason? ☐ physical characteristics of the water body ☐ limited public access ☐ other
If other, list reasons: NA

5. Describe the physical characteristics of the water body that hinders the frequency of secondary contact recreation (depth, etc.) (Attach photos or depth measurements, etc. for documentation).
Same as before

6. Describe why there is limited public access (e.g. lack of roads, river or stream banks overgrown, etc.) (Attach photos, maps, etc. for documentation).
Same as before.

D. Noncontact Recreation Evaluation NA

Noncontact recreation applies to water bodies where recreation activities do not involve a significant risk of water ingestion, and where primary and secondary contact recreation uses do not occur because of unsafe conditions, such as barge traffic.

1. Provide site-specific information and documentation (including photographs) regarding unsafe conditions, recreation activities, and presence or absence of water recreation activities.

Field Data Sheets – Basic RUAA Survey

Stream Name Caney Creek above tidal Site: 14
Date: 4-3-2010 FDS Page 3 of 8 Time: 16:23 -16:40

E. Stream Channel and Substantial Pools
Please check the following which best describes the river or stream: ☒ Wadeable ☐ Non-wadeable

1. Wadeable Streams
Determine whether or not the average depth at the thalweg is greater than 0.5 meters and if there are substantial pools with a depth of 1 meter or greater. Walk an approximately 300 meter reach (total) at the site and take the following measurements within the 300 meter reach. Measurements should be taken during base flow conditions (sustained or typical dry, warm-weather flows between rainfall events, excluding unusual antecedent conditions of drought or wet weather

Also, take photos facing upstream, downstream, left bank, and right bank at the 30 meters, 150 meters, and 300 meters.
Photos #s (30 meters) Upstream ✓ Downstream ✓ Left Bank ✓ Right Bank ✓
Photos #s (150 meters) Upstream ✓ Downstream ✓ Left Bank ✓ Right Bank ✓
Photos #s (300 meters) Upstream ✓ Downstream ✓ Left Bank ✓ Right Bank ✓

a) Substantial pools - Measure the length of each pool (if > 10 pools only measure 10 pools), the width (at the widest point), and the deepest depth. A substantial pool is considered a pool greater than 10 meters in length for the purposes of a Basic RUAA Survey. If depth and/or width measurements were not attainable, explain why.

	Length (meters)	Width (meters)	Depth (meters)
Pool 1			
Pool 2			
Pool 3			
Pool 4			
Pool 5			
Pool 6			
Pool 7			
Pool 8			
Pool 9			
Pool 10			

b)Average depth at the thalweg –Take depth measurements approximately every 30 meters to calculate an average depth at the thalweg (at least 10 measurements needed). If depth and/or width measurements were not attainable, explain why.

Distance	Depth (meters)
30 meters	0.213m
60 meters	0.244m
90 meters	0.244m
120 meters	0.274m
150 meters	0.427m
180 meters	0.457m
210 meters	0.427m
240 meters	0.226m
270 meters	0.396m
300 meters	0.122m
Average	0.279m

← 30m upstream of bridge
← just downstream of bridge.

Field Data Sheets – Basic RUAA Survey

Stream Name Caney Creek above tidal Site: 14
Date: 04/03/2010 Time: 16:23 - 16:40

c) Stream width - Measure (1) the width at one point which represents the typical average width of the 300 meter reach; (2) the width at the narrowest point of the stream within the 300 meter reach; and (3) the width at the widest point of the stream within the 300 meter reach.

Measurement Type	Width (meters)
Typical Average Width of 300 meter reach	9.4m
Width at narrowest point of the stream within 300 meter reach	3.8m
Width at the widest point of the stream within 300 meter reach	12.3 m

d) Is there sufficient water within a 300 meter stream reach during base flow conditions to support primary contact recreation? X Yes ~~No~~
COMMENTS: KC 4/26/10

2. Non-wadeable Streams
If accessible, take 10 width measurements which represent typical widths of the 300 meter reach. If the water is too deep and not accessible record the estimated average width of the water body.

Also, take photos facing upstream, downstream, left bank, and right bank at .
Photos #s (30 meters) Upstream____ Downstream____ Left Bank ____ Right Bank____
Photos #s (150 meters) Upstream____ Downstream____ Left Bank ____ Right Bank____
Photos #s (300 meters) Upstream____ Downstream____ Left Bank ____ Right Bank____

# Measurements	Width (meters)
1	
2	
3	
4	
5	
6	
7	
8	
9	
10	

Field Data Sheets – Basic RUAA Survey

Stream Name Caney Creek above tidal Site: 14
Date: 04/03/10 Time: 16:23 - 16:40

F. Additional RUAA Information

1. Check the following activities observed over the site reach.

- ☐ Drinking or water in mouth
- ☐ Bathing
- ☐ Walking
- ☐ Jogging/running
- ☐ Bicycling
- ☐ Standing
- ☐ Sitting
- ☐ Lying down/sleeping
- ☐ Playing on shoreline
- ☐ Picnicking
- ☐ Motorcycle/ATV
- ☐ Hunting/Trapping
- ☐ Wildlife watching
- ☒ None
- ☐ Other: _____

2. Are there permanent or long-term hydrologic modifications that are constructed and operated in a way that affects the recreational uses? ☒ Yes ☐ No (If yes, please provide supporting documentation and photos.)
Comments: bridge.

3. Check any channel obstructions that apply (Attach photos).

- ☐ Culverts
- ☒ Barbed wire
- ☐ Utility pipe
- ☐ Fences
- ☐ Dams
- ☐ Other (specify): _____
- ☒ Log jams
- ☐ Thick vegetation
- ☐ Rip rap
- ☐ Low bridges
- ☐ Water control structure
- ☐ None

4. Check all surrounding conditions that promote recreational activities (Attach photos of evidence or unusual items of interest).

- ☐ Campgrounds
- ☐ Playgrounds
- ☐ Rural area
- ☐ Residential
- ☐ National forests
- ☐ Urban/suburban location
- ☐ Golf Course
- ☐ Sports Field
- ☐ Stairs/walkway
- ☐ Boating access (ramps)
- ☐ Beach
- ☒ Bridge crossing
- ☐ Commercial boating
- ☐ Trails/paths (hiking/biking)
- ☐ Paved parking lot
- ☐ Unimproved parking lot
- ☐ Roads (paved/unpaved)
- ☐ Populated area
- ☐ Docks or rafts
- ☐ Commercial outfitter
- ☐ Nearby school
- ☐ Power Line Corridor
- ☐ Parks (national/city/county/state)
- ☐ Public Property
- ☐ Other: _____
- ☐ None of the Above

Comments: _____

5. Check all surrounding conditions that impede recreational activities (Attach photos of evidence or unusual items of interest).

- ☐ Private Property
- ☐ No trespass sign
- ☐ Wildlife
- ☒ Steep slopes
- ☐ No public access
- ☐ No roads
- ☐ Fence
- ☐ Barge/ship traffic
- ☐ Industrial
- ☐ None of the Above
- ☐ Other: _____

Comments: Moderately steep slopes, substrate - too shallow soft sinking up to knee

6. Check any indications of human use (Attach photos).

- ☒ Roads
- ☐ Rope swings
- ☐ Dock/platform
- ☐ Foot paths/prints
- ☐ Other: _____
- ☐ RV/ATV Tracks
- ☐ Camping Sites
- ☐ Fire pit/ring
- ☐ Fishing Tackle
- ☐ NPDES Discharge
- ☐ Gates on corridor
- ☐ Children's toys
- ☐ Remnant's of Kid's play
- ☐ Organized event
- ☐ No Human Presence

Comments: _____

Field Data Sheets – Basic RUAA Survey

Stream Name Caney Creek above tidal Site: 14
Date: 04/03/10 Time: 16:23 - 16:40

7. Check all water characteristics that apply (Attach photos).
Aquatic Vegetation: ☐ absent ☒ rare ☐ common ☐ abundant
Algae Cover: ☒ absent ☐ rare ☐ common ☐ abundant
Odor: ☐ none ☒ rare ☐ common ☐ abundant
Color: ☐ clear ☐ green ☐ red ☒ brown ☐ black
Bottom Deposit: ☒ sludge ☐ solids ☐ fine sediments ☐ none ☐ other
Water Surface: ☒ clear ☐ scum ☐ foam ☐ debris ☐ oil
Other:

8. Vertebrates Observed within 300 meter reach

Snakes	☒ None	☐ slight presence	☐ moderate presence	☐ large presence
Water Dependent Birds	☒ None	☐ slight presence	☐ moderate presence	☐ large presence
Alligators	☒ None	☐ slight presence	☐ moderate presence	☐ large presence

Comments:

9. Mammals Observed within 300 meter reach

Wild	☒ None	☐ slight presence	☐ moderate presence	☐ large presence
Domesticated Pets	☒ None	☐ slight presence	☐ moderate presence	☐ large presence
Livestock	☒ None	☐ slight presence	☐ moderate presence	☐ large presence
Feral Hogs	☒ None	☐ slight presence	☐ moderate presence	☐ large presence

Comments:

10. Evidence of wild animals or evidence of birds, cattle, hogs, etc.
☒ Tracks ☐ Fecal droppings ☐ Bird nests

11. Garbage Observed

Large garbage in the channel	☐ None	☐ Rare	☒ Common	☐ Abundant
Small garbage in the channel	☐ None	☐ Rare	☒ Common	☐ Abundant
Bank Garbage	☐ None	☐ Rare	☒ Common	☐ Abundant

Briefly describe the kinds of garbage observed: Dead animals, skulls, bones, computers plastic bags, buckets, beer bottle, beer can, tires, wire mesh, bags of dead chicken on bank

12. Is the site located in a wildlife preserve with large wildlife (i.e waterfowl) population? ☐ Yes ☒ No

13. Please document any other relevant information regarding recreational activities and the water body in general (for example, area outside of the stream reach evaluated).
The substrate was too soft, sinking upto knee can be considered as non-wadiable but we surveyed it as wadiable.

Field Data Sheet - Basic RUAA Survey
Stream Flow (Discharge) Measurement

Stream: Caney Creek above tidal Date: 04/03/10
Site: 14 Site
Description: Old Van Vleck Rd @ Caney Creek
Time Begin: 16:28 Time End: 16:40 Meter Type: Sontek Flowtracker
Observers: P. Lokandth, M. Franks Stream Width*: 13 Section Width (W): 1.3
Observations:

Section Midpoint (ft)(m)	Section Depth (ft)(m) (cm) (D)	Observational Depth** (ft)(m)	Velocity (V) At Point (ft/s)(m/s)	Velocity (V) Average (ft/s)(m/s)	Flow (Q) (m^3/s)(ft^3/s) Q = (W)(D)(V)	Flow ft^3/s
0.65	0.2			0.19	~~0.19~~	0.049
1.95	0.3			0.63	~~0.63~~ KC 10/28/10	0.246
3.25	0.4			0.33	~~0.33~~	0.172
4.55	0.3			0.00	0.00	
5.85	0.2			0.00	0.00	
7.15	0.2			0.12	~~0.12~~ KC	0.031
8.45	0.3			0.00	0.00	
9.75	0.3			1.25	~~1.25~~ KC	0.488
11.05	0.3			0.00	0.00	
~~12.03~~ KC						
12.35	0.4			0.3	~~0.03~~ KC	0.016

Total Q = 1.001 cf/s

E MGS

Field Data Sheets – Basic RUAA Survey

(should be completed for each site)

Time: 1614 - 1633

Data Collectors & Contact Information: L. Ray, J. Wrast, A. Hughes, R. Thompson	
Date & Time: 4/3/10 1614 - 1633	County Name: Matagorda
Stream Name: Caney Creek above tidal	
Segment No. or nearest downstream Segment No.: 1305	
Description of Site: SH 35 @ Caney Creek Site 15	

At any point during the Basic RUAA Survey it becomes apparent that primary contact recreation is clearly the use for the water body the investigator should stop conducting the UAA.

A. Stream Characteristics:

1. Check the following channel flow status that applies.
☐ dry ☐ no flow ☑ flow ☐ normal ☐ high ☐ flooded

2. Check the following stream type that applies on the day of the survey:
Ephemeral: A stream which flows only during or immediately after a rainfall event, and contains no refuge pools capable of sustaining a viable community of aquatic organisms.
☐ Intermittent: A stream which has a period of zero flow for at least one week during most years. Where flow records are available, a stream with a 7Q2 flow of less than 0.1 cubic feet per second is considered intermittent.
☐ Intermittent w/ perennial pools: An intermittent stream which maintains persistent pools even when flow in the stream is less than 0.1 cubic feet per second.
☑ Perennial: A stream which flows continuously throughout the year. Perennial streams have a 7Q2 equal to or greater than 0.1 cubic feet per second.
☐ Designated or unclassified tidal stream: A stream that is tidally influenced, If you checked this box, you will need to contact the Water Quality Standards Group and evaluate whether or not a bathing beach is located along the tidal stream and whether or not a bathing beach is located along the estuary, bay or Gulf water that the tidal stream flows into.

3. Streamflow
Use USGS gage data (if a gage is located at a site or within a quarter mile of a site) or use the Stream Flow (Discharge) Measurement Form and follow the procedures outlined in the most recent TCEQ Surface Water Quality Monitoring Procedures, Volume 1, RG-415. If USGS gage data is used for a site, include that information as an attachment and list the streamflow on the sampling date below. If the stream flow taken at one site is representative of the flow at another site(s), then that flow can be used as the observed flow and should be documented below. If the stream flow measured at one site is different from another site, then stream flow should be taken at both sites. 1.649 cfs

4. Water Quality Data (Field Parameters)
Field parameters should be collected in accordance with the procedures outlined in the most recent TCEQ Surface Water Quality Monitoring Procedures, Volume 1.
Air Temp 25.5 °C Water Temp 24.5 °C Secchi .972 m

5. Riparian Zone (Mark dominant categories with L (Left Bank) and R (Right Bank). Bank orientation is determined by the investigator facing downstream.)

L R	Forest	____ Urban	____ Rip rap
____	Shrub dominated corridor	____ Pasture	____ Concrete
____	Herbaceous marsh	____ Row crops	Other (specify): ____
____	Mowed/maintained corridor	____ Denuded/Eroded bank	

6. Ease of bank access to the water body: ☐ Easy ☑ Moderately easy ☐ Moderately difficult ☐ Difficult

7. Please describe access opportunities or explain why the site is not easily accessible (Attach photos for documentation):
Steep slope but concrete from ROAD to creek under Bridge

8. Dominant Primary Substrate
☐ Cobble ☐ Sand ☐ Silt ☑ Mud/Clay ☑ Gravel ☐ Bedrock ☐ Rip rap ☐ Concrete
and Rocky (under Bridge)

every when else

QKC EPL QAR

Field Data Sheets – Basic RUAA Survey

Stream Name Caney Creek above tidal Site: 15
Date: 4/3/10 Time: 1614 - 1633

B. Primary Contact Water Recreation Evaluation:
- Primary contact recreation draft definition: Water recreation activities, such as wading by children, swimming, water skiing, diving, tubing, surfing, and whitewater kayaking, canoeing, and rafting, involving a significant risk of ingestion of water.

1. Were water recreation activities that involve a significant risk of ingestion (full body immersion) observed at this site?
☐ Yes ☑ No primary contact recreation activities were observed
a. Check the following boxes of primary contact recreation activities observed at the time of the sampling event at the site (Attach photos of the activities or lack of activities).
☐ Wading-Children ☐ Tubing ☑ No primary contact activities that commonly occur were observed
☐ Wading-Adults ☐ Surfing
☐ Swimming ☐ Whitewater-kayaking, canoeing, rafting
☐ Water skiing ☐ Other: _____
☐ Diving ☐ frequent public swimming-created by publicly owned land or commercial operations

b. Check the number of individuals observed at the site: ☑ None ☐ 1-10 ☐ 11-20 ☐ 20-50 ☐ greater than 50

c. Check the following that apply regarding the individuals proximity to the water body.
☐ Water in mouth or nose of the individual ☐ Primary touch: Individual's body (or portion) immersed in water
☐ Secondary touch: fishing, pets and related contact with water ☐ Individual is in a boat touching water
☐ Individual is on shore near water within 8 meters (25ft) of water ☐ Individual is well away from water between 8 and 30 meters (100 ft) ☑ Not applicable

2. If primary contact recreation activities are not observed, describe the physical characteristics of the water body that may hinder the frequency of primary contact (depth, etc.) (Attach photos, etc. for documentation).
NARROW, shallow, Banks heavily vegetated except under bridge, steep slope

3. Describe if there is public access (e.g. parks, roads, etc.) (Attach photos, maps, etc. for documentation).
Bridge crossing

4. Is an area with primary contact recreation activities or a bathing beach (e.g. state/local parks with swimming, etc.) located near (e.g. within 5 miles upstream and downstream) this site? NO

C. Secondary Contact Water Recreation Evaluation:
- Secondary contact recreation 1: Water recreation activities, such as fishing, commercial and recreational boating, and limited body contact incidental to shoreline activity, not involving a significant risk of water ingestion and that commonly occur.
- Secondary contact recreation 2: Water recreation activities, such as fishing, commercial and recreational boating, and limited body contact incidental to shoreline activity, not involving a significant risk of water ingestion but that occur less frequently than for secondary contact recreation 1 due to (1) physical characteristics of the water body and/or (2) limited public access.

1. Were water recreation activities observed at the site, but the nature of the recreation does not involve a significant risk of ingestion (e.g. secondary contact recreation activities)? ☐ Yes ☐ No secondary contact recreation activities were observed
a. Check the following boxes of secondary contact recreation activities that were observed at the time of the sampling event at the site (Attach photos of activities or lack of activities).
☐ Fishing
☐ Boating-commercial, recreational
☐ Non-whitewater-kayaking, rafting, canoeing
☑ No secondary contact recreation activities were observed
☐ Other secondary contact activities: _____

Field Data Sheets – Basic RUAA Survey

Stream Name Caney Creek above tidal Site: 15
Date: 4/3/10 Time: 1614 – 1633

b. Check the number of individuals observed at the site.
☑ None ☐ 1-10 ☐ 11-20 ☐ 20-50 ☐ greater than 50

c. Check the following that apply regarding the individuals proximity to the water body.
☐ Secondary touch: fishing, pets and related contact with water ☐ In a boat touching water
☐ Body on shore near water within 8 meters (25ft) of water ☐ Body well away from water between 8 and 30 meters (100 ft) N/A

2. If secondary contact recreation activities are not observed, describe the physical characteristics of the water body that may hinder the frequency of secondary contact (Attach photos, etc. for documentation).
Same

3. If secondary contact recreation activities are observed, how often do water recreational activities occur that do not involve a significant risk of water ingestion? ☐ frequently ☐ infrequently
Please describe how often the activities occur? ☐ Unknown ☐ Never ☐ Daily ☐ Monthly ☐ Yearly N/A

4. If infrequently, what is the reason? ☐ physical characteristics of the water body ☐ limited public access NA
☐ other
If other, list reasons: _____

5. Describe the physical characteristics of the water body that hinders the frequency of secondary contact recreation (depth, etc.) (Attach photos or depth measurements, etc. for documentation).
Same

6. Describe why there is limited public access (e.g. lack of roads, river or stream banks overgrown, etc.) (Attach photos, maps, etc. for documentation).
Same

D. Noncontact Recreation Evaluation

Noncontact recreation applies to water bodies where recreation activities do not involve a significant risk of water ingestion, and where primary and secondary contact recreation uses do not occur because of unsafe conditions, such as barge traffic.

1. Provide site-specific information and documentation (including photographs) regarding unsafe conditions, recreation activities, and presence or absence of water recreation activities.

Field Data Sheets – Basic RUAA Survey

Stream Name Caney Creek above tidal Site: 15
Date: 4/3/10 FDS Page 3 of 8 Time: 1614-1633

E. Stream Channel and Substantial Pools
Please check the following which best describes the river or stream: ☑ Wadeable ☐ Non-wadeable

1. Wadeable Streams
Determine whether or not the average depth at the thalweg is greater than 0.5 meters and if there are substantial pools with a depth of 1 meter or greater. Walk an approximately 300 meter reach (total) at the site and take the following measurements within the 300 meter reach. Measurements should be taken during base flow conditions (sustained or typical dry, warm-weather flows between rainfall events, excluding unusual antecedent conditions of drought or wet weather

Also, take photos facing upstream, downstream, left bank, and right bank at the 30 meters, 150 meters, and 300 meters.
Photos #s (30 meters) Upstream____ Downstream____ Left Bank ____ Right Bank____
Photos #s (150 meters) Upstream____ Downstream____ Left Bank ____ Right Bank____
Photos #s (300 meters) Upstream ✓ Downstream ✓ Left Bank ✓ Right Bank ✓

took pictures at 210 meters, couldn't go further due to log jam

a) Substantial pools - Measure the length of each pool (if > 10 pools only measure 10 pools), the width (at the widest point), and the deepest depth. A substantial pool is considered a pool greater than 10 meters in length for the purposes of a Basic RUAA Survey. If depth and/or width measurements were not attainable, explain why.

	Length (meters)	Width (meters)	Depth (meters)
Pool 1			
Pool 2			
Pool 3			
Pool 4			
Pool 5			
Pool 6			
Pool 7			
Pool 8			
Pool 9			
Pool 10			

b)Average depth at the thalweg –Take depth measurements approximately every 30 meters to calculate an average depth at the thalweg (at least 10 measurements needed). If depth and/or width measurements were not attainable, explain why.

Distance	Depth (meters)
30 meters	~~1.0~~ AH
60 meters	
90 meters	
120 meters	
150 meters	
180 meters	
210 meters	1.85 ft 0.564m * impassable log jam
240 meters	1.1 ft 0.335 m
270 meters	.6 ft 0.182 m
300 meters	1.0 ft 0.305 m * impassable log jam
Average	0.346m

Field Data Sheets – Basic RUAA Survey

Stream Name Caney Creek above tidal Site: 15
Date: 4/3/10 Time: 1614-1633

c) Stream width - Measure (1) the width at one point which represents the typical average width of the 300 meter reach; (2) the width at the narrowest point of the stream within the 300 meter reach; and (3) the width at the widest point of the stream within the 300 meter reach.

Measurement Type	Width (meters)	
Typical Average Width of 300 meter reach	21.0 ft	6.4 m
Width at narrowest point of the stream within 300 meter reach	10.0 ft	3.0 m
Width at the widest point of the stream within 300 meter reach	24.0 ft	7.3 m

d) Is there sufficient water within a 300 meter stream reach during base flow conditions to support primary contact recreation? ☑ Yes ☐ No
COMMENTS:

2. Non-wadeable Streams
If accessible, take 10 width measurements which represent typical widths of the 300 meter reach. If the water is too deep and not accessible record the estimated average width of the water body.

Also, take photos facing upstream, downstream, left bank, and right bank at .
Photos #s (30 meters) Upstream____ Downstream____ Left Bank ____ Right Bank____
Photos #s (150 meters) Upstream____ Downstream____ Left Bank ____ Right Bank____
Photos #s (300 meters) Upstream____ Downstream____ Left Bank ____ Right Bank____

# Measurements	Width (meters)
1	
2	
3	
4	
5	
6	
7	
8	
9	
10	

Field Data Sheets – Basic RUAA Survey

Stream Name Caney Creek above tidal Site: 15
Date: 4/3/10 Time: 1614 – 1633

F. Additional RUAA Information

1. Check the following activities observed over the site reach.

- ☐ Drinking or water in mouth
- ☐ Bathing
- ☐ Walking
- ☐ Jogging/running
- ☐ Bicycling
- ☐ Standing
- ☐ Sitting
- ☐ Lying down/sleeping
- ☐ Playing on shoreline
- ☐ Picnicking
- ☐ Motorcycle/ATV
- ☐ Hunting/Trapping
- ☐ Wildlife watching
- ☑ None
- ☐ Other: _____

2. Are there permanent or long-term hydrologic modifications that are constructed and operated in a way that affects the recreational uses? ☑ Yes ☐ No (If yes, please provide supporting documentation and photos.)
Comments: log-jams

3. Check any channel obstructions that apply (Attach photos).

- ☐ Culverts
- ☐ Barbed wire
- ☐ Utility pipe
- ☐ Fences
- ☐ Dams
- ☐ Other (specify): _____
- ☑ Log jams
- ☐ Thick vegetation
- ☐ Rip rap
- ☐ Low bridges
- ☐ Water control structure
- ☐ None

4. Check all surrounding conditions that promote recreational activities (Attach photos of evidence or unusual items of interest).

- ☐ Campgrounds
- ☐ Playgrounds
- ☐ Rural area
- ☐ Residential
- ☐ National forests
- ☐ Urban/suburban location
- ☐ Golf Course
- ☐ Sports Field
- ☐ Stairs/walkway
- ☐ Boating access (ramps)
- ☐ Beach
- ☑ Bridge crossing
- ☐ Commercial boating
- ☐ Trails/paths (hiking/biking)
- ☐ Paved parking lot
- ☐ Unimproved parking lot
- ☑ Roads (paved/unpaved)
- ☐ Populated area
- ☐ Docks or rafts
- ☐ Commercial outfitter
- ☐ Nearby school
- ☐ Power Line Corridor
- ☐ Parks (national/city/county/state)
- ☐ Public Property
- ☐ Other: _____
- ☐ None of the Above

Comments: _____

5. Check all surrounding conditions that impede recreational activities (Attach photos of evidence or unusual items of interest).

- ☐ Private Property
- ☐ No trespass sign
- ☐ Wildlife
- ☑ Steep slopes
- ☐ No public access
- ☐ No roads
- ☐ Fence
- ☐ Barge/ship traffic
- ☐ Industrial
- ☐ None of the Above
- ☐ Other: _____

Comments: _____

6. Check any indications of human use (Attach photos).

- ☐ Roads
- ☐ Rope swings
- ☐ Dock/platform
- ☐ Foot paths/prints
- ☑ Other: ~~graffiti under bridge~~ graffiti under bridge
- ☐ RV/ATV Tracks
- ☐ Camping Sites
- ☐ Fire pit/ring
- ☐ Fishing Tackle
- ☐ NPDES Discharge
- ☐ Gates on corridor
- ☐ Children's toys
- ☐ Remnant's of Kid's play
- ☐ Organized event
- ☐ No Human Presence

Comments: ~~graffiti~~ LR 4/3/10

Field Data Sheets – Basic RUAA Survey

Stream Name: Caney Creek above tidal Site: 15
Date: 4/3/10 Time: 1614 - 1633

7. Check all water characteristics that apply (Attach photos).

Aquatic Vegetation: ☐ absent ☑ rare ☐ common ☐ abundant
Algae Cover: ☐ absent ☑ rare ☐ common ☐ abundant
Odor: ☑ none ☐ rare ☐ common ☐ abundant
Color: ☐ clear ☐ green ☐ red ☑ brown ☐ black
Bottom Deposit: ☐ sludge ☐ solids ☑ fine sediments ☐ none ☐ other
Water Surface: ☑ clear ☐ scum ☐ foam ☐ debris ☐ oil
Other:

8. Vertebrates Observed within 300 meter reach

Snakes ☑ None ☐ slight presence ☐ moderate presence ☐ large presence
Water Dependent Birds ☑ None ☐ slight presence ☐ moderate presence ☐ large presence
Alligators ☑ None ☐ slight presence ☐ moderate presence ☐ large presence
Comments:

9. Mammals Observed within 300 meter reach

Wild ☑ None ☐ slight presence ☐ moderate presence ☐ large presence
Domesticated Pets ☑ None ☐ slight presence ☐ moderate presence ☐ large presence
Livestock ☑ None ☐ slight presence ☐ moderate presence ☐ large presence
Feral Hogs ☑ None ☐ slight presence ☐ moderate presence ☐ large presence
Comments:

10. Evidence of wild animals or evidence of birds, cattle, hogs, etc.
☑ Tracks ☑ Fecal droppings ☑ Bird nests Racoon & dog tracks, swallows under bridge

11. Garbage Observed

Large garbage in the channel ☑ None ☐ Rare ☐ Common ☐ Abundant
Small garbage in the channel ☑ None ☐ Rare ☐ Common ☐ Abundant
Bank Garbage ☐ None ☑ Rare ☐ Common ☐ Abundant
Briefly describe the kinds of garbage observed: Cans, bottles

12. Is the site located in a wildlife preserve with large wildlife (i.e waterfowl) population? ☐ Yes ☑ No

13. Please document any other relevant information regarding recreational activities and the water body in general (for example, area outside of the stream reach evaluated).

Field Data Sheet - Basic RUAA Survey
Stream Flow (Discharge) Measurement

Stream: Caney Creek above tidal Date: 4/3/10
Site: 15 Site
Description: SH 35 @ Caney Creek
Time Begin: 1624 Time End: 1635 Meter Type: Sontek Flowtracker
Observers: J. Wrast, L. Ray Stream Width*: 10 ft. Section Width (W): 1 ft
Observations:

Section Midpoint (ft)(m)	Section Depth (ft)(m) (cm) (D)	Observational Depth** (ft)(m)	Velocity (V) At Point (ft/s)(m/s)	Velocity (V) Average (ft/s)(m/s)	Flow (Q) (m^3/s)(ft^3/s) Q = (W)(D)(V)
0.50	0.20			-0.02	~~-0.04~~ -0.004 (KC 10/28/10)
1.50	0.30			0.08	0.024
2.50	0.50			0.19	0.095
3.50	0.50			0.46	0.230
4.50	0.50			0.48	0.240
5.50	0.55			0.65	0.358
6.50	0.50			0.50	0.250
7.50	0.45			0.54	0.243
8.50	0.30			0.45	0.135
9.50	0.30			0.26	0.078

Total Q = ~~1.586~~ (KC 10/28/10) cfs
1.649

E MBS

Field Data Sheets – Basic RUAA Survey

(should be completed for each site)

Data Collectors & Contact Information:	L. Ray, J. Wrast, A. Hughes, R. Thompson
Date & Time: 4/3/10 1504-1606	County Name: Matagorda
Stream Name: Caney Creek above tidal	
Segment No. or nearest downstream Segment No.: 1305	
Description of Site: Allenhurst Rd @ Caney Creek Site: 16	

At any point during the Basic RUAA Survey it becomes apparent that primary contact recreation is clearly the use for the water body the investigator should stop conducting the UAA.

A. Stream Characteristics:

1. Check the following channel flow status that applies.

☐ dry ☐ no flow ☑ low ☐ normal ☐ high ☐ flooded

2. Check the following stream type that applies on the day of the survey:

☐ Ephemeral: A stream which flows only during or immediately after a rainfall event, and contains no refuge pools capable of sustaining a viable community of aquatic organisms.

☐ Intermittent: A stream which has a period of zero flow for at least one week during most years. Where flow records are available, a stream with a 7Q2 flow of less than 0.1 cubic feet per second is considered intermittent.

☐ Intermittent w/ perennial pools: An intermittent stream which maintains persistent pools even when flow in the stream is less than 0.1 cubic feet per second.

☑ Perennial: A stream which flows continuously throughout the year. Perennial streams have a 7Q2 equal to or greater than 0.1 cubic feet per second.

☐ Designated or unclassified tidal stream: A stream that is tidally influenced. If you checked this box, you will need to contact the Water Quality Standards Group and evaluate whether or not a bathing beach is located along the tidal stream and whether or not a bathing beach is located along the estuary, bay or Gulf water that the tidal stream flows into.

3. Streamflow

Use USGS gage data (if a gage is located at a site or within a quarter mile of a site) or use the Stream Flow (Discharge) Measurement Form and follow the procedures outlined in the most recent TCEQ Surface Water Quality Monitoring Procedures, Volume 1, RG-415. If USGS gage data is used for a site, include that information as an attachment and list the streamflow on the sampling date below. If the stream flow taken at one site is representative of the flow at another site(s), then that flow can be used as the observed flow and should be documented below. If the stream flow measured at one site is different from another site, then stream flow should be taken at both sites. 3.141 cfs

4. Water Quality Data (Field Parameters)

Field parameters should be collected in accordance with the procedures outlined in the most recent TCEQ Surface Water Quality Monitoring Procedures, Volume 1.

Air Temp 27 °C Water Temp 24.5 °C Secchi .87 m

5. Riparian Zone (Mark dominant categories with L (Left Bank) and R (Right Bank). Bank orientation is determined by the investigator facing downstream.)

L	Forest		Urban		Rip rap
R	Shrub dominated corridor		Pasture		Concrete
	Herbaceous marsh		Row crops	Other (specify):	
	Mowed/maintained corridor		Denuded/Eroded bank		

6. Ease of bank access to the water body: ☐ Easy ☑ Moderately easy ☐ Moderately difficult ☐ Difficult

7. Please describe access opportunities or explain why the site is not easily accessible (Attach photos for documentation):

Steep slope but concreted; vegetation is high before the concrete; much of the banks are overgrown upstream of the bridge

8. Dominant Primary Substrate

☐ Cobble ☐ Sand ☐ Silt ☑ Mud/Clay ☐ Gravel ☐ Bedrock ☐ Rip rap ☐ Concrete

and mussels cover the bottom in the middle

Field Data Sheets – Basic RUAA Survey

Stream Name Caney Creek above tidal Site: 16
Date: 4/3/10 Time: 1504 – 1606

B. Primary Contact Water Recreation Evaluation:
- Primary contact recreation draft definition: Water recreation activities, such as wading by children, swimming, water skiing, diving, tubing, surfing, and whitewater kayaking, canoeing, and rafting, involving a significant risk of ingestion of water.

1. Were water recreation activities that involve a significant risk of ingestion (full body immersion) observed at this site?
☐ Yes ☑ No primary contact recreation activities were observed
a. Check the following boxes of primary contact recreation activities observed at the time of the sampling event at the site (Attach photos of the activities or lack of activities).

☐ Wading-Children	☐ Tubing	☑ No primary contact activities that commonly occur were observed
☐ Wading-Adults	☐ Surfing	
☐ Swimming	☐ Whitewater-kayaking, canoeing, rafting	
☐ Water skiing	☐ Other: _____	
☐ Diving	☐ frequent public swimming-created by publicly owned land or commercial operations	

b. Check the number of individuals observed at the site: ☐ None ☑ 1-10 ☐ 11-20 ☐ 20-50 ☐ greater than 50
NO 4/3/10
c. Check the following that apply regarding the individuals proximity to the water body.
☐ Water in mouth or nose of the individual ☐ Primary touch: Individual's body (or portion) immersed in water
☐ Secondary touch: fishing, pets and related contact with water ☐ Individual is in a boat touching water
☐ Individual is on shore near water within 8 meters (25ft) of water ☑ Individual is well away from water between 8 and 30 meters (100 ft) ☐ Not applicable

2. If primary contact recreation activities are not observed, describe the physical characteristics of the water body that may hinder the frequency of primary contact (depth, etc.) (Attach photos, etc. for documentation).
Trees across the creek; very shallow; ~~Numerous~~ Numerous large appliances dumped in creek, dead animals; difficult to navigate

3. Describe if there is public access (e.g. parks, roads, etc.) (Attach photos, maps, etc. for documentation).
Bridge across creek

4. Is an area with primary contact recreation activities or a bathing beach (e.g. state/local parks with swimming, etc.) located near (e.g. within 5 miles upstream and downstream) this site? no

C. Secondary Contact Water Recreation Evaluation:
- Secondary contact recreation 1: Water recreation activities, such as fishing, commercial and recreational boating, and limited body contact incidental to shoreline activity, not involving a significant risk of water ingestion and that commonly occur.
- Secondary contact recreation 2: Water recreation activities, such as fishing, commercial and recreational boating, and limited body contact incidental to shoreline activity, not involving a significant risk of water ingestion but that occur less frequently than for secondary contact recreation 1 due to (1) physical characteristics of the water body and/or (2) limited public access.

1. Were water recreation activities observed at the site, but the nature of the recreation does not involve a significant risk of ingestion (e.g. secondary contact recreation activities)? ☐ Yes ☑ No secondary contact recreation activities were observed
a. Check the following boxes of secondary contact recreation activities that were observed at the time of the sampling event at the site (Attach photos of activities or lack of activities).
☐ Fishing
☐ Boating-commercial, recreational
☐ Non-whitewater-kayaking, rafting, canoeing
☒ No secondary contact recreation activities were observed
☐ Other secondary contact activities: _____

Field Data Sheets – Basic RUAA Survey

Stream Name Caney Creek above tidal Site: 16
Date: 4/3/10 Time: 1504 – 1606

b. Check the number of individuals observed at the site.
☐ None ☑ 1-10 ☐ 11-20 ☐ 20-50 ☐ greater than 50

c. Check the following that apply regarding the individuals proximity to the water body.
☐ Secondary touch: fishing, pets and related contact with water ☑ In a boat touching water
☐ Body on shore near water within 8 meters (25ft) of water ☑ Body well away from water between 8 and 30 meters (100 ft)

2. If secondary contact recreation activities are not observed, describe the physical characteristics of the water body that may hinder the frequency of secondary contact (Attach photos, etc. for documentation).
Same

3. If secondary contact recreation activities are observed, how often do water recreational activities occur that do not involve a significant risk of water ingestion? ☐ frequently ☐ infrequently
Please describe how often the activities occur? ☐ Unknown ☐ Never ☐ Daily ☐ Monthly ☐ Yearly

4. If infrequently, what is the reason? ☐ physical characteristics of the water body ☐ limited public access ☐ other
If other, list reasons: _____

5. Describe the physical characteristics of the water body that hinders the frequency of secondary contact recreation (depth, etc.) (Attach photos or depth measurements, etc. for documentation).
Same

6. Describe why there is limited public access (e.g. lack of roads, river or stream banks overgrown, etc.) (Attach photos, maps, etc. for documentation).
Same

D. Noncontact Recreation Evaluation

Noncontact recreation applies to water bodies where recreation activities do not involve a significant risk of water ingestion, and where primary and secondary contact recreation uses do not occur because of unsafe conditions, such as barge traffic.

1. Provide site-specific information and documentation (including photographs) regarding unsafe conditions, recreation activities, and presence or absence of water recreation activities.

Field Data Sheets – Basic RUAA Survey

Stream Name Caney Creek above tidal Site: 16
Date: 4/3/10 FDS Page 3 of 8 Time: 1504 - 1606

E. Stream Channel and Substantial Pools
Please check the following which best describes the river or stream: ☑ Wadeable ☐ Non-wadeable

1. Wadeable Streams
Determine whether or not the average depth at the thalweg is greater than 0.5 meters and if there are substantial pools with a depth of 1 meter or greater. Walk an approximately 300 meter reach (total) at the site and take the following measurements within the 300 meter reach. Measurements should be taken during base flow conditions (sustained or typical dry, warm-weather flows between rainfall events, excluding unusual antecedent conditions of drought or wet weather

Also, take photos facing upstream, downstream, left bank, and right bank at the 30 meters, 150 meters, and 300 meters.
Photos #s (30 meters) Upstream ✓ Downstream ✓ Left Bank ✓ Right Bank ✓
Photos #s (150 meters) Upstream ✓ Downstream ✓ Left Bank ✓ Right Bank ✓
Photos #s (300 meters) Upstream ✓ Downstream ✓ Left Bank ✓ Right Bank ✓ took pic @ 300 meters of dumping site

a) Substantial pools - Measure the length of each pool (if > 10 pools only measure 10 pools), the width (at the widest point), and the deepest depth. A substantial pool is considered a pool greater than 10 meters in length for the purposes of a Basic RUAA Survey. If depth and/or width measurements were not attainable, explain why.

	Length (meters)	Width (meters)	Depth (meters)
Pool 1			
Pool 2			
Pool 3			
Pool 4			
Pool 5			
Pool 6			
Pool 7			
Pool 8			
Pool 9			
Pool 10			

b)Average depth at the thalweg –Take depth measurements approximately every 30 meters to calculate an average depth at the thalweg (at least 10 measurements needed). If depth and/or width measurements were not attainable, explain why.

Distance	Depth (meters)	
30 meters	2.1 ft	0.64 m
60 meters	0.6	0.182 m
90 meters	1.0	0.305 m
120 meters	1.45	0.441 m
150 meters	1.0	0.305 m
180 meters	2.0	0.61 m
210 meters	1.5	0.457 m
240 meters	1.5	0.457 m
270 meters	1.0	0.305 m
300 meters	1.0	0.305 m
Average		0.4 m

} similar depth downstream very soft sed. unable to continue walking downstream)

Field Data Sheets – Basic RUAA Survey

Stream Name Caney Creek above tidal Site: 16
Date: 4/3/10 Time: 1504 - 1606

c) Stream width - Measure (1) the width at one point which represents the typical average width of the 300 meter reach; (2) the width at the narrowest point of the stream within the 300 meter reach; and (3) the width at the widest point of the stream within the 300 meter reach.

Measurement Type	Width (meters)
Typical Average Width of 300 meter reach	7.74 m 25.4 ft
Width at narrowest point of the stream within 300 meter reach	3.05 m ~~19.0 ft~~ 10.0 ft
Width at the widest point of the stream within 300 meter reach	10.85 m 35.6 ft

d) Is there sufficient water within a 300 meter stream reach during base flow conditions to support primary contact recreation? ☑ Yes ☐ No

COMMENTS:
wading; but, numerous dead Animals in creek

2. Non-wadeable Streams
If accessible, take 10 width measurements which represent typical widths of the 300 meter reach. If the water is too deep and not accessible record the estimated average width of the water body.

Also, take photos facing upstream, downstream, left bank, and right bank at .
Photos #s (30 meters) Upstream____ Downstream____ Left Bank ____ Right Bank____
Photos #s (150 meters) Upstream____ Downstream____ Left Bank ____ Right Bank____
Photos #s (300 meters) Upstream____ Downstream____ Left Bank ____ Right Bank____

# Measurements	Width (meters)
1	~~25.4~~
2	~~19.0~~
3	
4	
5	
6	
7	
8	
9	
10	

@ 30m

Field Data Sheets – Basic RUAA Survey

Stream Name Caney Creek above tidal Site: 16
Date: 4/3/10 Time: 1504 - 1606

F. Additional RUAA Information

1. Check the following activities observed over the site reach.

- ☐ Drinking or water in mouth
- ☐ Bathing
- ☐ Walking
- ☐ Jogging/running
- ☐ Bicycling
- ☐ Standing
- ☐ Sitting
- ☐ Lying down/sleeping
- ☐ Playing on shoreline
- ☐ Picnicking
- ☐ Motorcycle/ATV
- ☐ Hunting/Trapping
- ☐ Wildlife watching
- ☑ None
- ☐ Other: _____

2. Are there permanent or long-term hydrologic modifications that are constructed and operated in a way that affects the recreational uses? ☐ Yes ☑ No (If yes, please provide supporting documentation and photos.)
Comments: _____

3. Check any channel obstructions that apply (Attach photos).

- ☐ Culverts
- ☐ Barbed wire
- ☐ Utility pipe
- ☐ Fences
- ☐ Dams
- ☐ Other (specify): _____
- ☑ Log jams
- ☐ Thick vegetation
- ☐ Rip rap
- ☐ Low bridges
- ☐ Water control structure
- ☑ None

NO LL 4/3/10

4. Check all surrounding conditions that promote recreational activities (Attach photos of evidence or unusual items of interest).

- ☐ Campgrounds
- ☐ Playgrounds
- ☑ Rural area
- ☐ Residential
- ☐ National forests
- ☐ Urban/suburban location
- ☐ Golf Course
- ☐ Sports Field
- ☐ Stairs/walkway
- ☐ Boating access (ramps)
- ☐ Beach
- ☑ Bridge crossing
- ☐ Commercial boating
- ☐ Trails/paths (hiking/biking)
- ☐ Paved parking lot
- ☐ Unimproved parking lot
- ☑ Roads (paved/unpaved)
- ☑ Populated area *
- ☐ Docks or rafts
- ☐ Commercial outfitter
- ☐ Nearby school
- ☐ Power Line Corridor
- ☐ Parks (national/city/county/state)
- ☐ Public Property
- ☐ Other: _____
- ☐ None of the Above

Comments: * Trailers on left side near creek

5. Check all surrounding conditions that impede recreational activities (Attach photos of evidence or unusual items of interest).

- ☐ Private Property
- ☐ No trespass sign
- ☐ Wildlife
- ☑ Steep slopes
- ☐ No public access
- ☐ No roads
- ☐ Fence
- ☐ Barge/ship traffic
- ☐ Industrial
- ☐ None of the Above
- ☐ Other: _____

Comments: _____

6. Check any indications of human use (Attach photos).

- ☐ Roads
- ☐ Rope swings
- ☐ Dock/platform
- ☐ Foot paths/prints
- ☐ Other: _____
- ☐ RV/ATV Tracks
- ☐ Camping Sites
- ☐ Fire pit/ring
- ☐ Fishing Tackle
- ☐ NPDES Discharge
- ☐ Gates on corridor
- ☐ Children's toys
- ☐ Remnant's of Kid's play
- ☐ Organized event
- ☑ No Human Presence

Comments: _____

Field Data Sheets – Basic RUAA Survey

Stream Name Caney Creek above tidal Site: 16
Date: 4/3/18 Time: 1504 - 1606

7. Check all water characteristics that apply (Attach photos).

Aquatic Vegetation: ☐ absent ☑ rare ☐ common ☐ abundant
Algae Cover: ☑ absent ☑ rare ☐ common ☐ abundant
Odor: ☐ none ☐ rare ☐ common ☑ abundant dead Animals
Color: ☑ clear ☐ green ☐ red ☑ brown ☐ black
Bottom Deposit: ☐ sludge ☐ solids ☑ fine sediments ☐ none ☑ other mussels
Water Surface: ☑ clear ☐ scum ☐ foam ☑ debris ☐ oil
Other: No oil 4/3/10

8. Vertebrates Observed within 300 meter reach

Snakes	☑ None	☐ slight presence	☐ moderate presence	☐ large presence
Water Dependent Birds	☑ None	☐ slight presence	☐ moderate presence	☐ large presence
Alligators	☑ None	☐ slight presence	☐ moderate presence	☐ large presence

Comments:

9. Mammals Observed within 300 meter reach

Wild	☑ None	☐ slight presence	☐ moderate presence	☐ large presence
Domesticated Pets	☐ None	☑ slight presence	☐ moderate presence	☐ large presence Dead dog in creek
Livestock	☑ None	☐ slight presence	☐ moderate presence	☐ large presence
Feral Hogs	☑ None	☐ slight presence	☐ moderate presence	☐ large presence

Comments: Heard dogs barking; dogs @ the trailers

10. Evidence of wild animals or evidence of birds, cattle, hogs, etc.
☐ Tracks ☐ Fecal droppings ☐ Bird nests Animal skulls & bones

11. Garbage Observed

Large garbage in the channel	☐ None	☐ Rare	☐ Common	☑ Abundant
Small garbage in the channel	☐ None	☐ Rare	☑ Common	☐ Abundant
Bank Garbage	☐ None	☐ Rare	☑ Common	☐ Abundant

Briefly describe the kinds of garbage observed: Appliances dumped in creek; tires, cans, glass bottles, paper, plastic bags, shopping cart life vest, shovel, teddy bear

12. Is the site located in a wildlife preserve with large wildlife (i.e waterfowl) population? ☐ Yes ☑ No

13. Please document any other relevant information regarding recreational activities and the water body in general (for example, area outside of the stream reach evaluated).

Field Data Sheet - Basic RUAA Survey
Stream Flow (Discharge) Measurement

Stream: Caney Creek above tidal Date: 4/3/10
Site: 16 Site
Description: Allenhurst Rd @ Caney Creek
Time Begin: 1522 Time End: 1535 Meter Type: Sontek Flowtracker
Observers: L. Ray, J. Wrast Stream Width*: 19 ft. Section Width (W): 1.9
Observations: Bottom had numerous mussels

Section Midpoint (ft)(m)	Section Depth (ft)(m) (cm) (D)	Observational Depth** (ft)(m)	Velocity (V) At Point (ft/s)(m/s)	Velocity (V) Average (ft/s)(m/s)	Flow (Q) (m^3/s)(ft^3/s) Q = (W)(D)(V)
0.95	0.20			0.36	0.137
2.85	0.25			0.55	0.261
4.75	0.30			0.28	0.160
6.65	0.30			0.77	0.439
8.55	0.40			0.74	0.562
10.45	0.35			0.85	0.565
12.35	0.30			0.80	0.456
14.25	0.30			0.75	0.428
16.15	0.30			0.04	0.023
18.05	0.20			0.29	0.110

Total Q ~~3.066~~ 3.141 cfs KC 10/28/10

E MES

Field Data Sheets – Basic RUAA Survey

(should be completed for each site)

Data Collectors & Contact Information: L. Ray, J. Wrast, A. Hughes, R. Thompson	
Date & Time: 4/3/2010 1417-1455	County Name: Matagorda
Stream Name: Caney Creek above tidal	
Segment No. or nearest downstream Segment No.: 1305	
Description of Site: FM 157 @ Caney Creek Site 17	

At any point during the Basic RUAA Survey it becomes apparent that primary contact recreation is clearly the use for the water body the investigator should stop conducting the UAA.

FM 457?

A. Stream Characteristics:

1. Check the following channel flow status that applies.

☐ dry ☐ no flow ☑ low ☐ normal ☐ high ☐ flooded

2. Check the following stream type that applies on the day of the survey:

☐ Ephemeral: A stream which flows only during or immediately after a rainfall event, and contains no refuge pools capable of sustaining a viable community of aquatic organisms.

☐ Intermittent: A stream which has a period of zero flow for at least one week during most years. Where flow records are available, a stream with a 7Q2 flow of less than 0.1 cubic feet per second is considered intermittent.

☐ Intermittent w/ perennial pools: An intermittent stream which maintains persistent pools even when flow in the stream is less than 0.1 cubic feet per second.

☑ Perennial: A stream which flows continuously throughout the year. Perennial streams have a 7Q2 equal to or greater than 0.1 cubic feet per second.

☐ Designated or unclassified tidal stream: A stream that is tidally influenced. If you checked this box, you will need to contact the Water Quality Standards Group and evaluate whether or not a bathing beach is located along the tidal stream and whether or not a bathing beach is located along the estuary, bay or Gulf water that the tidal stream flows into.

3. Streamflow

Use USGS gage data (if a gage is located at a site or within a quarter mile of a site) or use the Stream Flow (Discharge) Measurement Form and follow the procedures outlined in the most recent TCEQ Surface Water Quality Monitoring Procedures, Volume 1, RG-415. If USGS gage data is used for a site, include that information as an attachment and list the streamflow on the sampling date below. If the stream flow taken at one site is representative of the flow at another site(s), then that flow can be used as the observed flow and should be documented below. If the stream flow measured at one site is different from another site, then stream flow should be taken at both sites. 4.4 cfs

4. Water Quality Data (Field Parameters)

Field parameters should be collected in accordance with the procedures outlined in the most recent TCEQ Surface Water Quality Monitoring Procedures, Volume 1.

Air Temp 26 °C Water Temp 25 °C Secchi .504 m

5. Riparian Zone (Mark dominant categories with L (Left Bank) and R (Right Bank). Bank orientation is determined by the investigator facing downstream.)

	Forest		Urban		Rip rap
R	Shrub dominated corridor		Pasture		Concrete
	Herbaceous marsh		Row crops	Other (specify):	House & barn on L Bank
L	Mowed/maintained corridor		Denuded/Eroded bank		Houses on R Bank

6. Ease of bank access to the water body: ☐ Easy ☑ Moderately easy ☐ Moderately difficult ☐ Difficult

NO LR 4/3/10

7. Please describe access opportunities or explain why the site is not easily accessible (Attach photos for documentation): Steep slope but concrete - so walkable down to creek

8. Dominant Primary Substrate

☐Cobble ☐Sand ☐Silt ☑Mud/Clay ☐Gravel ☐Bedrock ☐Rip rap ☐ Concrete

Q E KC

Field Data Sheets – Basic RUAA Survey

Stream Name Caney Creek above tidal Site: 17
Date: 4/3/10 Time: 1417-1455

B. Primary Contact Water Recreation Evaluation:
- Primary contact recreation draft definition: Water recreation activities, such as wading by children, swimming, water skiing, diving, tubing, surfing, and whitewater kayaking, canoeing, and rafting, involving a significant risk of ingestion of water.

1. Were water recreation activities that involve a significant risk of ingestion (full body immersion) observed at this site?
☐ Yes ☑ No primary contact recreation activities were observed
a. Check the following boxes of primary contact recreation activities observed at the time of the sampling event at the site (Attach photos of the activities or lack of activities).

☐ Wading-Children	☐ Tubing	☑ No primary contact activities that commonly occur were observed
☐ Wading-Adults	☐ Surfing	
☐ Swimming	☐ Whitewater-kayaking, canoeing, rafting	
☐ Water skiing	☐ Other: _____	
☐ Diving	☐ frequent public swimming-created by publicly owned land or commercial operations	

b. Check the number of individuals observed at the site: ☐ None ☑ 1-10 ☐ 11-20 ☐ 20-50 ☐ greater than 50

c. Check the following that apply regarding the individuals proximity to the water body.
☐ Water in mouth or nose of the individual ☐ Primary touch: Individual's body (or portion) immersed in water
☐ Secondary touch: fishing, pets and related contact with water ☐ Individual is in a boat touching water
☑ Individual is on shore near water within 8 meters (25ft) of water ☐ Individual is well away from water between 8 and 30 meters (100 ft) ☐ Not applicable Boy with his dog; dog was in the water

2. If primary contact recreation activities are not observed, describe the physical characteristics of the water body that may hinder the frequency of primary contact (depth, etc.) (Attach photos, etc. for documentation).
Deep mud; overgrown banks

3. Describe if there is public access (e.g. parks, roads, etc.) (Attach photos, maps, etc. for documentation).
Bridge crossing; houses on both sides

4. Is an area with primary contact recreation activities or a bathing beach (e.g. state/local parks with swimming, etc.) located near (e.g. within 5 miles upstream and downstream) this site? NO

C. Secondary Contact Water Recreation Evaluation:
- Secondary contact recreation 1: Water recreation activities, such as fishing, commercial and recreational boating, and limited body contact incidental to shoreline activity, not involving a significant risk of water ingestion and that commonly occur.
- Secondary contact recreation 2: Water recreation activities, such as fishing, commercial and recreational boating, and limited body contact incidental to shoreline activity, not involving a significant risk of water ingestion but that occur less frequently than for secondary contact recreation 1 due to (1) physical characteristics of the water body and/or (2) limited public access.

1. Were water recreation activities observed at the site, but the nature of the recreation does not involve a significant risk of ingestion (e.g. secondary contact recreation activities)? ☐ Yes ☑ No secondary contact recreation activities were observed
a. Check the following boxes of secondary contact recreation activities that were observed at the time of the sampling event at the site (Attach photos of activities or lack of activities).
☐ Fishing
☐ Boating-commercial, recreational
☐ Non-whitewater-kayaking, rafting, canoeing
☐ No secondary contact recreation activities were observed
☐ Other secondary contact activities: _____

Field Data Sheets – Basic RUAA Survey

Stream Name Caney Creek above tidal Site: 17
Date: 4/8/10 Time: 1417 - 1455

b. Check the number of individuals observed at the site.
☐ None ☑ 1-10 ☐ 11-20 ☐ 20-50 ☐ greater than 50

c. Check the following that apply regarding the individuals proximity to the water body.
☐ Secondary touch: fishing, pets and related contact with water ☐ In a boat touching water
☑ Body on shore near water within 8 meters (25ft) of water ☐ Body well away from water between 8 and 30 meters (100 ft)

2. If secondary contact recreation activities are not observed, describe the physical characteristics of the water body that may hinder the frequency of secondary contact (Attach photos, etc. for documentation).
Same

3. If secondary contact recreation activities are observed, how often do water recreational activities occur that do not involve a significant risk of water ingestion? ☐ frequently ☐ infrequently
Please describe how often the activities occur? ☐ Unknown ☐ Never ☐ Daily ☐ Monthly ☐ Yearly

4. If infrequently, what is the reason? ☐ physical characteristics of the water body ☐ limited public access ☐ other
If other, list reasons: _____

5. Describe the physical characteristics of the water body that hinders the frequency of secondary contact recreation (depth, etc.) (Attach photos or depth measurements, etc. for documentation).
Same

6. Describe why there is limited public access (e.g. lack of roads, river or stream banks overgrown, etc.) (Attach photos, maps, etc. for documentation).
Same

D. Noncontact Recreation Evaluation

Noncontact recreation applies to water bodies where recreation activities do not involve a significant risk of water ingestion, and where primary and secondary contact recreation uses do not occur because of unsafe conditions, such as barge traffic.

1. Provide site-specific information and documentation (including photographs) regarding unsafe conditions, recreation activities, and presence or absence of water recreation activities.

Field Data Sheets – Basic RUAA Survey

Stream Name Caney Creek above tidal Site: 17
Date: 4-3-10 FDS Page 3 of 8 Time: 1417 - 1455

E. Stream Channel and Substantial Pools
Please check the following which best describes the river or stream: ☑ Wadeable ☐ Non-wadeable

1. Wadeable Streams
Determine whether or not the average depth at the thalweg is greater than 0.5 meters and if there are substantial pools with a depth of 1 meter or greater. Walk an approximately 300 meter reach (total) at the site and take the following measurements within the 300 meter reach. Measurements should be taken during base flow conditions (sustained or typical dry, warm-weather flows between rainfall events, excluding unusual antecedent conditions of drought or wet weather

Also, take photos facing upstream, downstream, left bank, and right bank at the 30 meters, 150 meters, and 300 meters.
Photos #s (30 meters) Upstream___ Downstream___ Left Bank ___ Right Bank___
Photos #s (150 meters) Upstream___ Downstream___ Left Bank ___ Right Bank___
Photos #s (300 meters) Upstream___ Downstream___ Left Bank ___ Right Bank___

a) Substantial pools - Measure the length of each pool (if > 10 pools only measure 10 pools), the width (at the widest point), and the deepest depth. A substantial pool is considered a pool greater than 10 meters in length for the purposes of a Basic RUAA Survey. If depth and/or width measurements were not attainable, explain why.

NO

	Length (meters)	Width (meters)	Depth (meters)
Pool 1			
Pool 2			
Pool 3			
Pool 4			
Pool 5			
Pool 6			
Pool 7			
Pool 8			
Pool 9			
Pool 10			

b)Average depth at the thalweg –Take depth measurements approximately every 30 meters to calculate an average depth at the thalweg (at least 10 measurements needed). If depth and/or width measurements were not attainable, explain why.

Distance	Depth (~~meters~~) ft
30 meters	2.35 ft 0.716 m
60 meters	
90 meters	
120 meters	~~2.4~~ AH
150 meters	~~1.4~~ AH
180 meters	~~2.4~~ AH
210 meters	
240 meters	
270 meters	
300 meters	
Average	

unable to take depth due to deep water and soft sediment (sink to thigh)

Field Data Sheets – Basic RUAA Survey

Stream Name Caney Creek above tidal Site: 17
Date: 4-3-10 Time: 1417-1455

c) Stream width - Measure (1) the width at one point which represents the typical average width of the 300 meter reach; (2) the width at the narrowest point of the stream within the 300 meter reach; and (3) the width at the widest point of the stream within the 300 meter reach.

Measurement Type	Width (meters)
Typical Average Width of 300 meter reach	18ft 5.49 m
Width at narrowest point of the stream within 300 meter reach	
Width at the widest point of the stream within 300 meter reach	

d) Is there sufficient water within a 300 meter stream reach during base flow conditions to support primary contact recreation? X Yes ☐ No
COMMENTS:

2. Non-wadeable Streams
If accessible, take 10 width measurements which represent typical widths of the 300 meter reach. If the water is too deep and not accessible record the estimated average width of the water body.

Also, take photos facing upstream, downstream, left bank, and right bank at .
Photos #s (30 meters) Upstream____ Downstream____ Left Bank ____ Right Bank____
Photos #s (150 meters) Upstream____ Downstream____ Left Bank ____ Right Bank____
Photos #s (300 meters) Upstream____ Downstream____ Left Bank ____ Right Bank____

# Measurements	Width (meters)
1	
2	
3	
4	
5	
6	
7	
8	
9	
10	

Field Data Sheets – Basic RUAA Survey

Stream Name Caney Creek above tidal Site: 17
Date: 4/13/10 Time: 1417-1455

F. Additional RUAA Information

1. Check the following activities observed over the site reach.

- ☐ Drinking or water in mouth
- ☐ Bathing
- ☑ Walking
- ☐ Jogging/running
- ☐ Bicycling
- ☑ Standing
- ☐ Sitting
- ☐ Lying down/sleeping
- ☐ Playing on shoreline
- ☐ Picnicking
- ☐ Motorcycle/ATV
- ☐ Hunting/Trapping
- ☐ Wildlife watching
- ☐ None
- ☐ Other: _____

2. Are there permanent or long-term hydrologic modifications that are constructed and operated in a way that affects the recreational uses? ☐ Yes ☑ No (If yes, please provide supporting documentation and photos.)
Comments: _____

3. Check any channel obstructions that apply (Attach photos).

- ☐ Culverts
- ☑ Fences NO LR 4/13/10
- ☐ Log jams
- ☐ Rip rap
- ☐ Water control structure
- ☐ Barbed wire
- ☐ Dams
- ☐ Thick vegetation
- ☐ Low bridges
- ☐ None
- ☐ Utility pipe
- ☐ Other (specify): _____

4. Check all surrounding conditions that promote recreational activities (Attach photos of evidence or unusual items of interest).

- ☐ Campgrounds
- ☐ Playgrounds
- ☐ Rural area
- ☑ Residential
- ☐ National forests
- ☐ Urban/suburban location
- ☐ Golf Course
- ☐ Sports Field
- ☐ Stairs/walkway
- ☐ Boating access (ramps)
- ☐ Beach
- ☑ Bridge crossing
- ☐ Commercial boating
- ☐ Trails/paths (hiking/biking)
- ☐ Paved parking lot
- ☐ Unimproved parking lot
- ☑ Roads (paved/unpaved)
- ☑ Populated area
- ☐ Docks or rafts
- ☐ Commercial outfitter
- ☐ Nearby school
- ☐ Power Line Corridor
- ☐ Parks (national/city/county/state)
- ☐ Public Property
- ☐ Other: _____
- ☐ None of the Above

Comments: _____

5. Check all surrounding conditions that impede recreational activities (Attach photos of evidence or unusual items of interest).

- ☐ Private Property
- ☐ No trespass sign
- ☐ Wildlife
- ☑ Steep slopes
- ☐ No public access
- ☐ No roads
- ☐ Fence
- ☐ Barge/ship traffic
- ☐ Industrial
- ☐ None of the Above
- ☐ Other: _____

Comments: _____

6. Check any indications of human use (Attach photos).

- ☐ Roads
- ☐ Rope swings
- ☐ Dock/platform
- ☐ Foot paths/prints
- ☑ Other: CANOE in yard
- ☐ RV/ATV Tracks
- ☐ Camping Sites
- ☐ Fire pit/ring
- ☐ Fishing Tackle
- ☐ NPDES Discharge
- ☐ Gates on corridor
- ☑ Children's toys
- ☑ Remnant's of Kid's play
- ☐ Organized event
- ☐ No Human Presence

Comments: _____

Field Data Sheets – Basic RUAA Survey

Stream Name Caney Creek above tidal Site: 17
Date: 4/3/10 Time: 1417 – 1455

7. Check all water characteristics that apply (Attach photos).
Aquatic Vegetation: ☐ absent ☐ rare ☑ common ☐ abundant
Algae Cover: ☐ absent ☑ rare ☐ common ☐ abundant
Odor: ☑ none ☐ rare ☐ common ☐ abundant
Color: ☐ clear ☐ green ☐ red ☑ brown ☐ black
Bottom Deposit: ☐ sludge ☐ solids ☑ fine sediments ☐ none ☐ other
Water Surface: ☑ clear ☐ scum ☐ foam ☐ debris ☐ oil
Other:

8. Vertebrates Observed within 300 meter reach
Snakes ☑ None ☐ slight presence ☐ moderate presence ☐ large presence
Water Dependent Birds ☑ None ☐ slight presence ☐ moderate presence ☐ large presence
Alligators ☑ None ☐ slight presence ☐ moderate presence ☐ large presence
Comments: 2 turtles

9. Mammals Observed within 300 meter reach
Wild ☑ None ☐ slight presence ☐ moderate presence ☐ large presence
Domesticated Pets ☐ None ☐ slight presence ☑ moderate presence ☐ large presence 1 dog
Livestock ☑ None ☐ slight presence ☐ moderate presence ☐ large presence
Feral Hogs ☑ None ☐ slight presence ☐ moderate presence ☐ large presence
Comments:

10. Evidence of wild animals or evidence of birds, cattle, hogs, etc.
☐ Tracks ☐ Fecal droppings ☑ Bird nests swallows under bridge

11. Garbage Observed
Large garbage in the channel ☑ None ☐ Rare ☐ Common ☐ Abundant
Small garbage in the channel ☑ None ☐ Rare ☐ Common ☐ Abundant
Bank Garbage ☐ None ☐ Rare ☑ Common ☐ Abundant
Briefly describe the kinds of garbage observed: Styrofoam Container; old bait container

12. Is the site located in a wildlife preserve with large wildlife (i.e waterfowl) population? ☐ Yes ☑ No

13. Please document any other relevant information regarding recreational activities and the water body in general (for example, area outside of the stream reach evaluated).

Field Data Sheet - Basic RUAA Survey

Stream Flow (Discharge) Measurement

Stream: Caney Creek above tidal Date: 4/3/2010

Site: 17 Site

Description: FM 157 @ Caney Creek

Time Begin: 1417 Time End: 1439 Meter Type: Sontek Flowtracker

Observers: L. Ray, J. Wrast Stream Width*: 18 ft. Section Width (W): .90 ft.

Observations:

Section Midpoint (ft)(m)	Section Depth (ft)(m)(cm) (D)	Observational Depth** (ft)(m)	Velocity (V) At Point (ft/s)(m/s)	Velocity (V) Average (ft/s)(m/s)	Flow (Q) (m^3/s)(ft^3/s) Q = (W)(D)(V)
0.45	0.30			-0.01	-0.003
1.35	0.65			0.02	0.012
2.25	0.75			0.07	0.047
3.15	0.80			0.14	0.101
4.05	1.00			0.33	0.297
4.95	~~0.33~~ 1.1 LR 4/3/10			0.32	0.317
5.85	~~0.60~~ 1.1 LR 4/3/10			0.31	0.307
6.75	1.15			0.42	0.435
7.65	1.2			0.28	0.302
8.55	1.2			0.16	0.173
9.45	1.2			0.33	0.356
10.35	1.2			0.34	0.367
11.25	1.15			0.42	0.435
12.15	1.10			0.39	0.386
13.05	1.05			0.40	0.378
13.95	0.90			0.31	0.251
14.85	0.80			0.29	0.209
15.75	0.70			0.16	0.101
16.65	0.60			-0.03	-0.016
17.55	0.40			0.02	0.007

KC 10/20/10

Total Q = ~~4.470~~ cfs

4.462

E MES

Field Data Sheets – Basic RUAA Survey

(should be completed for each site)

Data Collectors & Contact Information:	L. Ray, J. Wrast, R. Thompson, A. Hughes
Date & Time: 4/13/2010 1339-1354	County Name: Matagorda
Stream Name: Caney Creek above tidal	
Segment No. or nearest downstream Segment No.: 1305	
Description of Site: Grisham Rd @ Caney Creek Site: 18	

At any point during the Basic RUAA Survey it becomes apparent that primary contact recreation is clearly the use for the water body the investigator should stop conducting the UAA.

A. Stream Characteristics:

1. Check the following channel flow status that applies.

☐ dry ☐ no flow ☑ low ☐ normal ☐ high ☐ flooded

2. Check the following stream type that applies on the day of the survey:

☐ Ephemeral: A stream which flows only during or immediately after a rainfall event, and contains no refuge pools capable of sustaining a viable community of aquatic organisms.

☐ Intermittent: A stream which has a period of zero flow for at least one week during most years. Where flow records are available, a stream with a 7Q2 flow of less than 0.1 cubic feet per second is considered intermittent.

☐ Intermittent w/ perennial pools: An intermittent stream which maintains persistent pools even when flow in the stream is less than 0.1 cubic feet per second.

☑ Perennial: A stream which flows continuously throughout the year. Perennial streams have a 7Q2 equal to or greater than 0.1 cubic feet per second.

☐ Designated or unclassified tidal stream: A stream that is tidally influenced. If you checked this box, you will need to contact the Water Quality Standards Group and evaluate whether or not a bathing beach is located along the tidal stream and whether or not a bathing beach is located along the estuary, bay or Gulf water that the tidal stream flows into.

3. Streamflow

Use USGS gage data (if a gage is located at a site or within a quarter mile of a site) or use the Stream Flow (Discharge) Measurement Form and follow the procedures outlined in the most recent TCEQ Surface Water Quality Monitoring Procedures, Volume 1, RG-415. If USGS gage data is used for a site, include that information as an attachment and list the streamflow on the sampling date below. If the stream flow taken at one site is representative of the flow at another site(s), then that flow can be used as the observed flow and should be documented below. If the stream flow measured at one site is different from another site, then stream flow should be taken at both sites. ___/___ cfs 36.66 cfs

KL 10/28/10 * Flow value from Site 19, similar flow

4. Water Quality Data (Field Parameters)

Field parameters should be collected in accordance with the procedures outlined in the most recent TCEQ Surface Water Quality Monitoring Procedures, Volume 1.

Air Temp 30 °C Water Temp 26 °C Secchi 0.504 m

5. Riparian Zone (Mark dominant categories with L (Left Bank) and R (Right Bank). Bank orientation is determined by the investigator facing downstream.)

___	Forest		Urban	___	Rip rap
___	Shrub dominated corridor	L R	Pasture	___	Concrete
___	Herbaceous marsh	___	Row crops	Other (specify):	___
___	Mowed/maintained corridor	___	Denuded/Eroded bank		

6. Ease of bank access to the water body: ☐ Easy ☐ Moderately easy ☑ Moderately difficult ☐ Difficult

7. Please describe access opportunities or explain why the site is not easily accessible (Attach photos for documentation):

Fence Along L Bank; R Bank moderately steep
Fence under bridge on L Bank

8. Dominant Primary Substrate

☐ Cobble ☐ Sand ☐ Silt ☑ Mud/Clay ☐ Gravel ☐ Bedrock ☐ Rip rap ☐ Concrete

E Kc

Field Data Sheets – Basic RUAA Survey

Stream Name: Caney Creek above tidal Site: 18
Date: 7/3/10 1339-1354 Time:

B. Primary Contact Water Recreation Evaluation:
- Primary contact recreation draft definition: Water recreation activities, such as wading by children, swimming, water skiing, diving, tubing, surfing, and whitewater kayaking, canoeing, and rafting, involving a significant risk of ingestion of water.

1. Were water recreation activities that involve a significant risk of ingestion (full body immersion) observed at this site?
☐ Yes ☑ No primary contact recreation activities were observed
a. Check the following boxes of primary contact recreation activities observed at the time of the sampling event at the site (Attach photos of the activities or lack of activities):

☐ Wading-Children	☐ Tubing	☑ No primary contact activities that commonly occur were observed
☐ Wading-Adults	☐ Surfing	
☐ Swimming	☐ Whitewater-kayaking, canoeing, rafting	
☐ Water skiing	☐ Other: _____	
☐ Diving	☐ frequent public swimming-created by publicly owned land or commercial operations	

b. Check the number of individuals observed at the site: ☑ None ☐ 1-10 ☐ 11-20 ☐ 20-50 ☐ greater than 50

c. Check the following that apply regarding the individuals proximity to the water body.
☐ Water in mouth or nose of the individual ☐ Primary touch: Individual's body (or portion) immersed in water
☐ Secondary touch: fishing, pets and related contact with water ☐ Individual is in a boat touching water
☐ Individual is on shore near water within 8 meters (25ft) of water ☐ Individual is well away from water between 8 and 30 meters (100 ft) ☑ Not applicable

2. If primary contact recreation activities are not observed, describe the physical characteristics of the water body that may hinder the frequency of primary contact (depth, etc.) (Attach photos, etc. for documentation).
Fence & Steep Bank

3. Describe if there is public access (e.g. parks, roads, etc.) (Attach photos, maps, etc. for documentation).
Bridge ACROSS Creek

4. Is an area with primary contact recreation activities or a bathing beach (e.g. state/local parks with swimming, etc.) located near (e.g. within 5 miles upstream and downstream) this site? no

C. Secondary Contact Water Recreation Evaluation:
- Secondary contact recreation 1: Water recreation activities, such as fishing, commercial and recreational boating, and limited body contact incidental to shoreline activity, not involving a significant risk of water ingestion and that commonly occur.
- Secondary contact recreation 2: Water recreation activities, such as fishing, commercial and recreational boating, and limited body contact incidental to shoreline activity, not involving a significant risk of water ingestion but that occur less frequently than for secondary contact recreation 1 due to (1) physical characteristics of the water body and/or (2) limited public access.

1. Were water recreation activities observed at the site, but the nature of the recreation does not involve a significant risk of ingestion (e.g. secondary contact recreation activities)? ☐ Yes ☐ No secondary contact recreation activities were observed
a. Check the following boxes of secondary contact recreation activities that were observed at the time of the sampling event at the site (Attach photos of activities or lack of activities).
☐ Fishing
☐ Boating-commercial, recreational
☐ Non-whitewater-kayaking, rafting, canoeing
☑ No secondary contact recreation activities were observed
☐ Other secondary contact activities: _____

Field Data Sheets – Basic RUAA Survey

Stream Name Caney Creek above tidal Site: 18
Date: 4/3/18 Time: 1339 - 1354

b. Check the number of individuals observed at the site.
✓ None ☐ 1-10 ☐ 11-20 ☐ 20-50 ☐ greater than 50

c. Check the following that apply regarding the individuals proximity to the water body.
☐ Secondary touch: fishing, pets and related contact with water ☐ In a boat touching water
☐ Body on shore near water within 8 meters (25ft) of water ☐ Body well away from water between 8 and 30 meters (100 ft) N/A

2. If secondary contact recreation activities are not observed, describe the physical characteristics of the water body that may hinder the frequency of secondary contact (Attach photos, etc. for documentation).
Same

3. If secondary contact recreation activities are observed, how often do water recreational activities occur that do not involve a significant risk of water ingestion? ☐ frequently ☐ infrequently
Please describe how often the activities occur? ☐ Unknown ☐ Never ☐ Daily ☐ Monthly ☐ Yearly N/A

4. If infrequently, what is the reason? ☐ physical characteristics of the water body ☐ limited public access ☐ other
If other, list reasons: _____

5. Describe the physical characteristics of the water body that hinders the frequency of secondary contact recreation (depth, etc.) (Attach photos or depth measurements, etc. for documentation).
Same

6. Describe why there is limited public access (e.g. lack of roads, river or stream banks overgrown, etc.) (Attach photos, maps, etc. for documentation).
Same

D. Noncontact Recreation Evaluation

Noncontact recreation applies to water bodies where recreation activities do not involve a significant risk of water ingestion, and where primary and secondary contact recreation uses do not occur because of unsafe conditions, such as barge traffic.

1. Provide site-specific information and documentation (including photographs) regarding unsafe conditions, recreation activities, and presence or absence of water recreation activities.

Field Data Sheets – Basic RUAA Survey

Stream Name Caney Creek above tidal Site: 18
Date: 4/3/10 FDS Page 3 of 8 Time: 1339-1354

E. Stream Channel and Substantial Pools
Please check the following which best describes the river or stream: ☐ Wadeable ☑ Non-wadeable

1. Wadeable Streams
Determine whether or not the average depth at the thalweg is greater than 0.5 meters and if there are substantial pools with a depth of 1 meter or greater. Walk an approximately 300 meter reach (total) at the site and take the following measurements within the 300 meter reach. Measurements should be taken during base flow conditions (sustained or typical dry, warm-weather flows between rainfall events, excluding unusual antecedent conditions of drought or wet weather

Also, take photos facing upstream, downstream, left bank, and right bank at the 30 meters, 150 meters, and 300 meters.
Photos #s (30 meters) Upstream____ Downstream____ Left Bank ____ Right Bank____
Photos #s (150 meters) Upstream____ Downstream____ Left Bank ____ Right Bank____
Photos #s (300 meters) Upstream____ Downstream____ Left Bank ____ Right Bank____

a) Substantial pools - Measure the length of each pool (if > 10 pools only measure 10 pools), the width (at the widest point), and the deepest depth. A substantial pool is considered a pool greater than 10 meters in length for the purposes of a Basic RUAA Survey. If depth and/or width measurements were not attainable, explain why.

	Length (meters)	Width (meters)	Depth (meters)
Pool 1			
Pool 2			
Pool 3			
Pool 4			
Pool 5			
Pool 6			
Pool 7			
Pool 8			
Pool 9			
Pool 10			

b)Average depth at the thalweg –Take depth measurements approximately every 30 meters to calculate an average depth at the thalweg (at least 10 measurements needed). If depth and/or width measurements were not attainable, explain why.

Distance	Depth (meters)
30 meters	
60 meters	
90 meters	
120 meters	
150 meters	
180 meters	
210 meters	
240 meters	
270 meters	
300 meters	
Average	

Field Data Sheets – Basic RUAA Survey

Stream Name Caney Creek above tidal Site: 18
Date: 4/3/10 Time: 1339-1354

c) Stream width - Measure (1) the width at one point which represents the typical average width of the 300 meter reach; (2) the width at the narrowest point of the stream within the 300 meter reach; and (3) the width at the widest point of the stream within the 300 meter reach.

Measurement Type	Width (meters)
Typical Average Width of 300 meter reach	
Width at narrowest point of the stream within 300 meter reach	
Width at the widest point of the stream within 300 meter reach	

d) Is there sufficient water within a 300 meter stream reach during base flow conditions to support primary contact recreation? ☐ Yes ☐ No
COMMENTS:

2. Non-wadeable Streams
If accessible, take 10 width measurements which represent typical widths of the 300 meter reach. If the water is too deep and not accessible record the estimated average width of the water body.

Also, take photos facing upstream, downstream, left bank, and right bank at .
Photos #s (30 meters) Upstream____ Downstream____ Left Bank ____ Right Bank____
Photos #s (150 meters) Upstream____ Downstream____ Left Bank ____ Right Bank____
Photos #s (300 meters) Upstream____ Downstream____ Left Bank ____ Right Bank____

# Measurements	Width (meters)
1	70.3 ft
2	
3	
4	
5	
6	
7	
8	
9	
10	

At the Bridge 21.43 m

Depth at the Bridge 4 ft ~~but~~ but greater than 4 ft. away from Bridge.

Field Data Sheets – Basic RUAA Survey

Stream Name Caney Creek above tidal Site: 18
Date: 4/13/10 Time: 1339 - 1354

F. Additional RUAA Information

1. Check the following activities observed over the site reach.

- ☐ Drinking or water in mouth
- ☐ Bathing
- ☐ Walking
- ☐ Jogging/running
- ☐ Bicycling
- ☐ Standing
- ☐ Sitting
- ☐ Lying down/sleeping
- ☐ Playing on shoreline
- ☐ Picnicking
- ☐ Motorcycle/ATV
- ☐ Hunting/Trapping
- ☐ Wildlife watching
- ☑ None
- ☐ Other: _____

2. Are there permanent or long-term hydrologic modifications that are constructed and operated in a way that affects the recreational uses? ☐ Yes ☑ No (If yes, please provide supporting documentation and photos.)

Comments: _____

3. Check any channel obstructions that apply (Attach photos).

- ☐ Culverts
- ☐ Barbed wire
- ☐ Utility pipe
- ☐ Fences
- ☐ Dams
- ☐ Other (specify): _____
- ☐ Log jams
- ☐ Thick vegetation
- ☐ Rip rap
- ☐ Low bridges
- ☐ Water control structure
- ☑ None

4. Check all surrounding conditions that promote recreational activities (Attach photos of evidence or unusual items of interest).

- ☐ Campgrounds
- ☐ Playgrounds
- ☐ Rural area
- ☐ Residential
- ☐ National forests
- ☐ Urban/suburban location
- ☐ Golf Course
- ☐ Sports Field
- ☐ Stairs/walkway
- ☐ Boating access (ramps)
- ☐ Beach
- ☑ Bridge crossing
- ☐ Commercial boating
- ☐ Trails/paths (hiking/biking)
- ☐ Paved parking lot
- ☐ Unimproved parking lot
- ☑ Roads (paved/unpaved)
- ☐ Populated area
- ☐ Docks or rafts
- ☐ Commercial outfitter
- ☐ Nearby school
- ☐ Power Line Corridor
- ☐ Parks (national/city/county/state)
- ☐ Public Property
- ☐ Other: _____
- ☐ None of the Above

Comments: _____

5. Check all surrounding conditions that impede recreational activities (Attach photos of evidence or unusual items of interest).

- ☐ Private Property
- ☐ No trespass sign
- ☐ Wildlife
- ☑ Steep slopes
- ☐ No public access
- ☐ No roads
- ☑ Fence
- ☐ Barge/ship traffic
- ☐ Industrial
- ☐ None of the Above
- ☐ Other: _____

Comments: _____

6. Check any indications of human use (Attach photos).

- ☐ Roads
- ☐ Rope swings
- ☐ Dock/platform
- ☐ Foot paths/prints
- ☑ Other: _____
- ☐ RV/ATV Tracks
- ☐ Camping Sites
- ☐ Fire pit/ring
- ☐ Fishing Tackle
- ☐ NPDES Discharge
- ☐ Gates on corridor
- ☐ Children's toys
- ☐ Remnant's of Kid's play
- ☐ Organized event
- ☐ No Human Presence

Comments: Church which appears to be boarded up - Cemetery behind Church

Field Data Sheets – Basic RUAA Survey

Stream Name Caney Creek above tidal Site: 18
Date: 4/3/10 Time: 1339 - 1354

7. Check all water characteristics that apply (Attach photos).

Aquatic Vegetation: ☐ absent ☑ rare ☐ common ☐ abundant
Algae Cover: ☐ absent ☑ rare ☐ common ☐ abundant
Odor: ☑ none ☐ rare ☐ common ☐ abundant
Color: ☐ clear ☐ green ☐ red ☑ brown ☐ black
Bottom Deposit: ☐ sludge ☐ solids ☑ fine sediments ☐ none ☐ other
Water Surface: ☑ clear ☐ scum ☐ foam ☐ debris ☐ oil
Other:

8. Vertebrates Observed within 300 meter reach

Snakes ☑ None ☐ slight presence ☐ moderate presence ☐ large presence
Water Dependent Birds ☑ None ☐ slight presence ☐ moderate presence ☐ large presence
Alligators ☑ None ☐ slight presence ☐ moderate presence ☐ large presence
Comments:

9. Mammals Observed within 300 meter reach

Wild ☑ None ☐ slight presence ☐ moderate presence ☐ large presence
Domesticated Pets ☑ None ☐ slight presence ☐ moderate presence ☐ large presence
Livestock ☑ None ☐ slight presence ☐ moderate presence ☐ large presence
Feral Hogs ☑ None ☐ slight presence ☐ moderate presence ☐ large presence
Comments: evidence of cattle - droppings and tracks

10. Evidence of wild animals or evidence of birds, cattle, hogs, etc.
☑ Tracks ☐ Fecal droppings ☐ Bird nests RACOON tracks

11. Garbage Observed

Large garbage in the channel ☑ None ☐ Rare ☐ Common ☐ Abundant
Small garbage in the channel ☑ None ☐ Rare ☐ Common ☐ Abundant
Bank Garbage ☐ None ☑ Rare ☐ Common ☐ Abundant
Briefly describe the kinds of garbage observed: Beer cans, glass bottles Big plastic tub

12. Is the site located in a wildlife preserve with large wildlife (i.e waterfowl) population? ☐ Yes ☑ No

13. Please document any other relevant information regarding recreational activities and the water body in general (for example, area outside of the stream reach evaluated).

Field Data Sheet - Basic RUAA Survey
Stream Flow (Discharge) Measurement

Stream: Caney Creek above tidal Date: 4/3/2010
Site: 18 Site
Description: Grisham Rd. @ Caney Creek
Time Begin: 1339 Time End: 1354 Meter Type: Sontek Flowtracker
Observers: J. Wrast, L. Ray, R. Thompson Stream Width*: Section Width (W):
Observations: A. Hughes

Section Midpoint (ft) (m)	Section Depth (ft) (m) (cm) (D)	Observational Depth** (ft)(m)	Velocity (V)		Flow (Q) (m^3/s) (ft^3/s) Q = (W)(D)(V)
			At Point (ft/s)(m/s)	Average (ft/s)(m/s)	

Physically and hydrologically similar to Site 19.
No flow taken here.

Total Q = 36.66 cf/s

* Flow value from Site 19 using a Flow Boat

Field Data Sheets – Basic RUAA Survey

(should be completed for each site)

Data Collectors & Contact Information:	L. Ray, J. Wrast, R. Thompson, A. Hughes
Date & Time: 4/3/10 1223–1326	County Name: Matagorda
Stream Name: Caney Creek above tidal	
Segment No. or nearest downstream Segment No.: 1305	
Description of Site: Fay Ranch Rd @ Caney Creek	Site: 19

At any point during the Basic RUAA Survey it becomes apparent that primary contact recreation is clearly the use for the water body the investigator should stop conducting the UAA.

A. Stream Characteristics:

1. Check the following channel flow status that applies.

☐ dry ☐ no flow ☑ low ☐ normal ☐ high ☐ flooded

2. Check the following stream type that applies on the day of the survey:

☐ Ephemeral: A stream which flows only during or immediately after a rainfall event, and contains no refuge pools capable of sustaining a viable community of aquatic organisms.

☐ Intermittent: A stream which has a period of zero flow for at least one week during most years. Where flow records are available, a stream with a 7Q2 flow of less than 0.1 cubic feet per second is considered intermittent.

☐ Intermittent w/ perennial pools: An intermittent stream which maintains persistent pools even when flow in the stream is less than 0.1 cubic feet per second.

☑ Perennial: A stream which flows continuously throughout the year. Perennial streams have a 7Q2 equal to or greater than 0.1 cubic feet per second.

☐ Designated or unclassified tidal stream: A stream that is tidally influenced. If you checked this box, you will need to contact the Water Quality Standards Group and evaluate whether or not a bathing beach is located along the tidal stream and whether or not a bathing beach is located along the estuary, bay or Gulf water that the tidal stream flows into.

3. Streamflow

Use USGS gage data (if a gage is located at a site or within a quarter mile of a site) or use the Stream Flow (Discharge) Measurement Form and follow the procedures outlined in the most recent TCEQ Surface Water Quality Monitoring Procedures, Volume 1, RG-415. If USGS gage data is used for a site, include that information as an attachment and list the streamflow on the sampling date below. If the stream flow taken at one site is representative of the flow at another site(s), then that flow can be used as the observed flow and should be documented below. If the stream flow measured at one site is different from another site, then stream flow should be taken at both sites. ~~1.04~~ cfs KC 10/28/10

36.66

4. Water Quality Data (Field Parameters)

Field parameters should be collected in accordance with the procedures outlined in the most recent TCEQ Surface Water Quality Monitoring Procedures, Volume 1.

Air Temp 28 ~~26~~ °C LR 4/3/10 Water Temp 25 °C Secchi .57 m

5. Riparian Zone (Mark dominant categories with L (Left Bank) and R (Right Bank). Bank orientation is determined by the investigator facing downstream.)

____	Forest	____	Urban	____	Rip rap
____	Shrub dominated corridor	RL	Pasture	____	Concrete
____	Herbaceous marsh	____	Row crops	Other (specify):	____
____	Mowed/maintained corridor	____	Denuded/Eroded bank		

6. Ease of bank access to the water body: ☐ Easy ☑ Moderately easy ☐ Moderately difficult ☐ Difficult

7. Please describe access opportunities or explain why the site is not easily accessible (Attach photos for documentation):

Looks like private property but not posted and the road is numbered; Bank is moderately steep.

8. Dominant Primary Substrate

☐ Cobble ☐ Sand ☐ Silt ☑ Mud/Clay ☐ Gravel ☐ Bedrock ☐ Rip rap ☐ Concrete

E KC

Field Data Sheets – Basic RUAA Survey

Stream Name Caney Creek above tidal Site: 19
Date: 4/3/10 ~~1823~~ Time: 1223 - 1326

B. Primary Contact Water Recreation Evaluation:
- Primary contact recreation draft definition: Water recreation activities, such as wading by children, swimming, water skiing, diving, tubing, surfing, and whitewater kayaking, canoeing, and rafting, involving a significant risk of ingestion of water.

1. Were water recreation activities that involve a significant risk of ingestion (full body immersion) observed at this site?
☐ Yes ☑ No primary contact recreation activities were observed

a. Check the following boxes of primary contact recreation activities observed at the time of the sampling event at the site (Attach photos of the activities or lack of activities).

☐ Wading-Children ☐ Tubing ☑ No primary contact activities that commonly occur were observed
☐ Wading-Adults ☐ Surfing
☐ Swimming ☐ Whitewater-kayaking, canoeing, rafting
☐ Water skiing ☐ Other: _____
☐ Diving ☐ frequent public swimming-created by publicly owned land or commercial operations

b. Check the number of individuals observed at the site: ☑ None ☐ 1-10 ☐ 11-20 ☐ 20-50 ☐ greater than 50

c. Check the following that apply regarding the individuals proximity to the water body.
☐ Water in mouth or nose of the individual ☐ Primary touch: Individual's body (or portion) immersed in water
☐ Secondary touch: fishing, pets and related contact with water ☐ Individual is in a boat touching water
☐ Individual is on shore near water within 8 meters (25ft) of water ☐ Individual is well away from water between 8 and 30 meters (100 ft) ☑ Not applicable

2. If primary contact recreation activities are not observed, describe the physical characteristics of the water body that may hinder the frequency of primary contact (depth, etc.) (Attach photos, etc. for documentation).
In the middle of pasture with semi-steep banks; bottom is soft; presence of many cattle

3. Describe if there is public access (e.g. parks, roads, etc.) (Attach photos, maps, etc. for documentation).
Public Road but appears to be private; gravel Road

4. Is an area with primary contact recreation activities or a bathing beach (e.g. state/local parks with swimming, etc.) located near (e.g. within 5 miles upstream and downstream) this site? NO

C. Secondary Contact Water Recreation Evaluation:
- Secondary contact recreation 1: Water recreation activities, such as fishing, commercial and recreational boating, and limited body contact incidental to shoreline activity, not involving a significant risk of water ingestion and that commonly occur.
- Secondary contact recreation 2: Water recreation activities, such as fishing, commercial and recreational boating, and limited body contact incidental to shoreline activity, not involving a significant risk of water ingestion but that occur less frequently than for secondary contact recreation 1 due to (1) physical characteristics of the water body and/or (2) limited public access.

1. Were water recreation activities observed at the site, but the nature of the recreation does not involve a significant risk of ingestion (e.g. secondary contact recreation activities)? ☐ Yes ☑ No secondary contact recreation activities were observed

a. Check the following boxes of secondary contact recreation activities that were observed at the time of the sampling event at the site (Attach photos of activities or lack of activities).
☐ Fishing
☐ Boating-commercial, recreational
☐ Non-whitewater-kayaking, rafting, canoeing
☑ No secondary contact recreation activities were observed
☐ Other secondary contact activities: _____

Field Data Sheets – Basic RUAA Survey

Stream Name: Caney Creek above tidal Site: 19
Date: 4/3/10 Time: 1223 - 1326

b. Check the number of individuals observed at the site.
✓None ☐ 1-10 ☐ 11-20 ☐ 20-50 ☐ greater than 50

c. Check the following that apply regarding the individuals proximity to the water body. N/A
☐ Secondary touch: fishing, pets and related contact with water ☐ In a boat touching water
☐ Body on shore near water within 8 meters (25ft) of water ☐ Body well away from water between 8 and 30 meters (100 ft)

2. If secondary contact recreation activities are not observed, describe the physical characteristics of the water body that may hinder the frequency of secondary contact (Attach photos, etc. for documentation).
Same

3. If secondary contact recreation activities are observed, how often do water recreational activities occur that do not involve a significant risk of water ingestion? ☐ frequently ☐ infrequently
Please describe how often the activities occur? ☐ Unknown ☐ Never ☐ Daily ☐ Monthly ☐ Yearly

4. If infrequently, what is the reason? ☐ physical characteristics of the water body ☐ limited public access ☐ other
If other, list reasons: _____

5. Describe the physical characteristics of the water body that hinders the frequency of secondary contact recreation (depth, etc.) (Attach photos or depth measurements, etc. for documentation).
Same

6. Describe why there is limited public access (e.g. lack of roads, river or stream banks overgrown, etc.) (Attach photos, maps, etc. for documentation).
Same

D. Noncontact Recreation Evaluation
Noncontact recreation applies to water bodies where recreation activities do not involve a significant risk of water ingestion, and where primary and secondary contact recreation uses do not occur because of unsafe conditions, such as barge traffic.

1. Provide site-specific information and documentation (including photographs) regarding unsafe conditions, recreation activities, and presence or absence of water recreation activities.

Field Data Sheets – Basic RUAA Survey

Stream Name Caney Creek above tidal Site: 19
Date: 4/3/10 FDS Page 3 of 8 Time: 1223-1326

E. Stream Channel and Substantial Pools
Please check the following which best describes the river or stream: ☐ Wadeable ☑ Non-wadeable

1. Wadeable Streams
Determine whether or not the average depth at the thalweg is greater than 0.5 meters and if there are substantial pools with a depth of 1 meter or greater. Walk an approximately 300 meter reach (total) at the site and take the following measurements within the 300 meter reach. Measurements should be taken during base flow conditions (sustained or typical dry, warm-weather flows between rainfall events, excluding unusual antecedent conditions of drought or wet weather

Also, take photos facing upstream, downstream, left bank, and right bank at the 30 meters, 150 meters, and 300 meters.
Photos #s (30 meters) Upstream____ Downstream____ Left Bank ____ Right Bank____
Photos #s (150 meters) Upstream____ Downstream____ Left Bank ____ Right Bank____
Photos #s (300 meters) Upstream____ Downstream____ Left Bank ____ Right Bank____

a) Substantial pools - Measure the length of each pool (if > 10 pools only measure 10 pools), the width (at the widest point), and the deepest depth. A substantial pool is considered a pool greater than 10 meters in length for the purposes of a Basic RUAA Survey. If depth and/or width measurements were not attainable, explain why.

	Length (meters)	Width (meters)	Depth (meters)
Pool 1			
Pool 2			
Pool 3			
Pool 4			
Pool 5			
Pool 6			
Pool 7			
Pool 8			
Pool 9			
Pool 10			

b)Average depth at the thalweg –Take depth measurements approximately every 30 meters to calculate an average depth at the thalweg (at least 10 measurements needed). If depth and/or width measurements were not attainable, explain why.

Distance	Depth (meters)
30 meters	
60 meters	
90 meters	
120 meters	
150 meters	
180 meters	
210 meters	
240 meters	
270 meters	
300 meters	
Average	

Field Data Sheets – Basic RUAA Survey

Stream Name Caney Creek above tidal Site: 19
Date: 4/3/10 Time: 1223 – 1326

c) Stream width - Measure (1) the width at one point which represents the typical average width of the 300 meter reach; (2) the width at the narrowest point of the stream within the 300 meter reach; and (3) the width at the widest point of the stream within the 300 meter reach.

Measurement Type	Width (meters)
Typical Average Width of 300 meter reach	
Width at narrowest point of the stream within 300 meter reach	
Width at the widest point of the stream within 300 meter reach	

d) Is there sufficient water within a 300 meter stream reach during base flow conditions to support primary contact recreation? ☐ Yes ☐ No
COMMENTS:

2. Non-wadeable Streams
If accessible, take 10 width measurements which represent typical widths of the 300 meter reach. If the water is too deep and not accessible record the estimated average width of the water body.

Also, take photos facing upstream, downstream, left bank, and right bank at .
Photos #s (30 meters) Upstream ✓ Downstream ✓ Left Bank ✓ Right Bank ✓
Photos #s (150 meters) Upstream ✓ Downstream ✓ Left Bank ✓ Right Bank ✓
Photos #s (300 meters) Upstream ✓ Downstream ✓ Left Bank ✓ Right Bank ✓

# Measurements	Width (meters)
1	24
2	24
3	24
4	23
5	26
6	24
7	22
8	23
9	23
10	23

Field Data Sheets – Basic RUAA Survey

Stream Name Caney Creek above tidal Site: 19
Date: 4/3/10 Time: 1223 - 1326

F. Additional RUAA Information

1. Check the following activities observed over the site reach.

- ☐ Drinking or water in mouth
- ☐ Bathing
- ☐ Walking
- ☐ Jogging/running
- ☐ Bicycling
- ☐ Standing
- ☐ Sitting
- ☐ Lying down/sleeping
- ☐ Playing on shoreline
- ☐ Picnicking
- ☐ Motorcycle/ATV
- ☐ Hunting/Trapping
- ☐ Wildlife watching
- ☑ None
- ☐ Other: _____

2. Are there permanent or long-term hydrologic modifications that are constructed and operated in a way that affects the recreational uses? ☐ Yes ☑ No (If yes, please provide supporting documentation and photos.)
Comments: _____

3. Check any channel obstructions that apply (Attach photos).

- ☐ Culverts
- ☐ Barbed wire
- ☐ Utility pipe
- ☐ Fences
- ☐ Dams
- ☐ Other (specify): _____
- ☐ Log jams
- ☐ Thick vegetation
- ☐ Rip rap
- ☐ Low bridges
- ☐ Water control structure
- ☑ None

4. Check all surrounding conditions that promote recreational activities (Attach photos of evidence or unusual items of interest).

- ☐ Campgrounds
- ☐ Playgrounds
- ☑ Rural area
- ☐ Residential
- ☐ National forests
- ☐ Urban/suburban location
- ☐ Golf Course
- ☐ Sports Field
- ☐ Stairs/walkway
- ☐ Boating access (ramps)
- ☐ Beach
- ☑ Bridge crossing
- ☐ Commercial boating
- ☐ Trails/paths (hiking/biking)
- ☐ Paved parking lot
- ☐ Unimproved parking lot
- ☐ Roads (paved/unpaved)
- ☐ Populated area
- ☐ Docks or rafts
- ☐ Commercial outfitter
- ☐ Nearby school
- ☐ Power Line Corridor
- ☐ Parks (national/city/county/state)
- ☐ Public Property
- ☐ Other: _____
- ☐ None of the Above

Comments: _____

5. Check all surrounding conditions that impede recreational activities (Attach photos of evidence or unusual items of interest).

- ☐ Private Property
- ☐ No trespass sign
- ☐ Wildlife
- ☑ Steep slopes Moderate
- ☐ No public access
- ☐ No roads
- ☐ Fence
- ☐ Barge/ship traffic
- ☐ Industrial
- ☐ None of the Above
- ☐ Other: _____

Comments: _____

6. Check any indications of human use (Attach photos).

- ☐ Roads
- ☐ Rope swings
- ☐ Dock/platform
- ☐ Foot paths/prints
- ☑ Other: BARNS ? FARM equipment but did NOT See ANYONE
- ☐ RV/ATV Tracks
- ☐ Camping Sites
- ☐ Fire pit/ring
- ☐ Fishing Tackle
- ☐ NPDES Discharge
- ☐ Gates on corridor
- ☐ Children's toys
- ☐ Remnant's of Kid's play
- ☐ Organized event
- ☑ No Human Presence

NO LR 4/3/10

Comments: _____

Field Data Sheets – Basic RUAA Survey

Stream Name: Caney Creek above tidal Site: 19
Date: 4/3/10 Time: 1223 – 1326

7. Check all water characteristics that apply (Attach photos).

Aquatic Vegetation: ☐ absent ☐ rare ☑ common ☐ abundant
Algae Cover: ☐ absent ☑ rare ☐ common ☐ abundant
Odor: ☑ none ☐ rare ☐ common ☐ abundant
Color: ☐ clear ☐ green ☐ red ☑ brown ☐ black
Bottom Deposit: ☐ sludge ☐ solids ☑ fine sediments ☐ none ☐ other
Water Surface: ☑ clear ☐ scum ☐ foam ☐ debris ☐ oil
Other:

8. Vertebrates Observed within 300 meter reach

Snakes	☑ None	☐ slight presence	☐ moderate presence	☐ large presence
Water Dependent Birds	☑ None	☐ slight presence	☐ moderate presence	☐ large presence
Alligators	☑ None	☐ slight presence	☐ moderate presence	☐ large presence

Comments: 1 soft-shell turtle observed

9. Mammals Observed within 300 meter reach

Wild	☑ None	☐ slight presence	☐ moderate presence	☐ large presence
Domesticated Pets	☑ None	☐ slight presence	☐ moderate presence	☐ large presence
Livestock	☐ None	☐ slight presence	☐ moderate presence	☑ large presence
Feral Hogs	☑ None	☐ slight presence	☐ moderate presence	☐ large presence

Comments:

10. Evidence of wild animals or evidence of birds, cattle, hogs, etc.
☑ Tracks ☑ Fecal droppings ☑ Bird nests Canine droppings – NO birds nests
Racoon tracks

11. Garbage Observed

Large garbage in the channel	☑ None	☐ Rare	☐ Common	☐ Abundant
Small garbage in the channel	☑ None	☐ Rare	☐ Common	☐ Abundant
Bank Garbage	☐ None	☑ Rare	☐ Common	☐ Abundant

Briefly describe the kinds of garbage observed: PVC pipe

12. Is the site located in a wildlife preserve with large wildlife (i.e waterfowl) population? ☐ Yes ☑ No

13. Please document any other relevant information regarding recreational activities and the water body in general (for example, area outside of the stream reach evaluated).

Field Data Sheet - Basic RUAA Survey

Stream Flow (Discharge) Measurement

KC 10/28/10

Stream: Caney Creek above tidal Date: ~~4/3/2010~~

Site: 19 Site

Description: Fay Ranch Rd @ Caney Creek

Time Begin: _____ Time End: _____ Meter Type: Sontek Flowtracker

Observers: _____ Stream Width*: _____ Section Width (W): _____

Observations: _____

Section Midpoint (ft) (m)	Section Depth (ft) (m) (cm) (D)	Observational Depth** (ft)(m)	Velocity (V)		Flow (Q) (m^3/s) (ft^3/s) Q = (W)(D)(V)
			At Point (ft/s)(m/s)	Average (ft/s)(m/s)	

flow taken using FlowBoat M.9

Total Q = 36.66

From FlowBoat

* See attached FlowBoat Discharge Summary

Discharge Measurement Summary

Date Generated: Thu, October 28, 2010

Site Information	
Site Name	cc ruaa
Station Number	19
Location	

Measurement Information	
Party	ryan and jenny
Boat/Motor	

System Information	
System Type	RS-M9
Serial Number	468
Firmware Version	0.80
Software Version	1.00

System Setup	
Transducer Depth (ft)	1.15
Salinity (ppt)	0.0
Magnetic Declination (deg)	0.0

Units	
Distance	ft
Velocity	ft/s
Area	ft2
Discharge	cfs

Discharge Calculation Settings			
Track Reference	Bottom-Track	Left Method	Sloped Bank
Depth Reference	Vertical Beam	Right Method	Sloped Bank
Coordinate System	ENU	Top Fit Type	Power Fit
		Bottom Fit Type	Power Fit

Discharge Results	
Width (ft)	72.63
Area (ft2)	380.4
Mean Speed (ft/s)	0.096
Total Q (cfs)	36.66

Measurement Results

Tr		Time		Distance				Mean Vel		Discharge						%
#		Time	Duration	Track	DMG	Width	Area	Boat	Water	Left	Right	Top	Middle	Bottom	Total	Measured
1	R	9:58:11	0:05:25	66.98	61.30	74.42	386.1	0.206	0.087	-1.21	-0.72	9.72	23.10	2.84	33.72	68.5
2	L	10:04:04	0:05:51	79.51	61.38	74.50	395.5	0.227	0.125	-1.34	0.27	14.08	32.60	3.81	49.42	66.0
3	R	10:10:20	0:04:45	66.99	55.83	68.95	359.7	0.235	0.075	-0.51	-0.74	7.24	18.61	2.24	26.84	69.3
		Mean	0:05:21	71.16	59.50	72.63	380.4	0.223	0.096	-1.02	-0.40	10.35	24.77	2.96	36.66	67.9
		Std Dev	0:00:27	5.90	2.60	2.60	15.1	0.012	0.021	0.37	0.47	2.83	5.83	0.65	9.45	1.4
		COV	0.000	0.083	0.044	0.036	0.040	0.055	0.223	-0.358	-1.185	0.274	0.235	0.218	0.258	0.021

Exposure Time: 0:16:01

Tr1=20100403185947.riv; Tr2=20100403190541.riv; Tr3=20100403191156.riv;

Comments

Parameters and settings marked with a "*" are not constant for all files.

Report generated using SonTek RiverSurveyor Live v1.00

Field Data Sheets – Basic RUAA Survey

(should be completed for each site)

Data Collectors & Contact Information: L. Ray, J. Wrast, R. Thompson, A. Hughes	
Date & Time: 4/3/2010 1121-1215	County Name: Matagorda
Stream Name: Caney Creek above tidal	
Segment No. or nearest downstream Segment No.: 1305	
Description of Site: FM 457 @ Caney Creek Site: 20	

At any point during the Basic RUAA Survey it becomes apparent that primary contact recreation is clearly the use for the water body the investigator should stop conducting the UAA.

A. Stream Characteristics:

1. Check the following channel flow status that applies.
☐ dry ☐ no flow ☑ low ☐ normal ☐ high ☐ flooded

2. Check the following stream type that applies on the day of the survey:
☐ Ephemeral: A stream which flows only during or immediately after a rainfall event, and contains no refuge pools capable of sustaining a viable community of aquatic organisms.
☐ Intermittent: A stream which has a period of zero flow for at least one week during most years. Where flow records are available, a stream with a 7Q2 flow of less than 0.1 cubic feet per second is considered intermittent.
☐ Intermittent w/ perennial pools: An intermittent stream which maintains persistent pools even when flow in the stream is less than 0.1 cubic feet per second.
☑ Perennial: A stream which flows continuously throughout the year. Perennial streams have a 7Q2 equal to or greater than 0.1 cubic feet per second.
☐ Designated or unclassified tidal stream: A stream that is tidally influenced. If you checked this box, you will need to contact the Water Quality Standards Group and evaluate whether or not a bathing beach is located along the tidal stream and whether or not a bathing beach is located along the estuary, bay or Gulf water that the tidal stream flows into.

3. Streamflow
Use USGS gage data (if a gage is located at a site or within a quarter mile of a site) or use the Stream Flow (Discharge) Measurement Form and follow the procedures outlined in the most recent TCEQ Surface Water Quality Monitoring Procedures, Volume 1, RG-415. If USGS gage data is used for a site, include that information as an attachment and list the streamflow on the sampling date below. If the stream flow taken at one site is representative of the flow at another site(s), then that flow can be used as the observed flow and should be documented below. If the stream flow measured at one site is different from another site, then stream flow should be taken at both sites. 6.379 cfs

4. Water Quality Data (Field Parameters)
Field parameters should be collected in accordance with the procedures outlined in the most recent TCEQ Surface Water Quality Monitoring Procedures, Volume 1.
Air Temp 30 °C Water Temp 23 °C Secchi 0.86 m

5. Riparian Zone (Mark dominant categories with L (Left Bank) and R (Right Bank). Bank orientation is determined by the investigator facing downstream.)

____ Forest	____ Urban	____ Rip rap
____ Shrub dominated corridor	____ Pasture	____ Concrete
____ Herbaceous marsh	____ Row crops	Other (specify): ____
____ Mowed/maintained corridor	L, R Denuded/Eroded bank	

6. Ease of bank access to the water body: ☐ Easy ☑ Moderately easy ☐ Moderately difficult ☐ Difficult

7. Please describe access opportunities or explain why the site is not easily accessible (Attach photos for documentation):
Barb-wire fence on ~~Left~~ Right Bank LR 4/3/10

8. Dominant Primary Substrate
☐ Cobble ☐ Sand ☐ Silt ☑ Mud/Clay ☐ Gravel ☐ Bedrock ☐ Rip rap ☐ Concrete

E KC Q2 Q (M.S)

Field Data Sheets – Basic RUAA Survey

Stream Name: Caney Creek above tidal Site: 20
Date: 4/3/10 Time: 1121-1215

B. Primary Contact Water Recreation Evaluation:
- Primary contact recreation draft definition: Water recreation activities, such as wading by children, swimming, water skiing, diving, tubing, surfing, and whitewater kayaking, canoeing, and rafting, involving a significant risk of ingestion of water.

1. Were water recreation activities that involve a significant risk of ingestion (full body immersion) observed at this site?
☐ Yes ☑ No primary contact recreation activities were observed
a. Check the following boxes of primary contact recreation activities observed at the time of the sampling event at the site (Attach photos of the activities or lack of activities).

☐ Wading-Children	☐ Tubing	☑ No primary contact activities that commonly occur were observed
☐ Wading-Adults	☐ Surfing	
☐ Swimming	☐ Whitewater-kayaking, canoeing, rafting	
☐ Water skiing	☐ Other: _____	
☐ Diving	☐ frequent public swimming-created by publicly owned land or commercial operations	

b. Check the number of individuals observed at the site: ☑ None ☐ 1-10 ☐ 11-20 ☐ 20-50 ☐ greater than 50

c. Check the following that apply regarding the individuals proximity to the water body.
☐ Water in mouth or nose of the individual ☐ Primary touch: Individual's body (or portion) immersed in water
☐ Secondary touch: fishing, pets and related contact with water ☐ Individual is in a boat touching water
☐ Individual is on shore near water within 8 meters (25ft) of water ☐ Individual is well away from water between 8 and 30 meters (100 ft) ☑ Not applicable

2. If primary contact recreation activities are not observed, describe the physical characteristics of the water body that may hinder the frequency of primary contact (depth, etc.) (Attach photos, etc. for documentation).
Barb-wire fence on Right Bank - heavy vegetation on left bank, steep drop-off into water in some places debris in waterway

3. Describe if there is public access (e.g. parks, roads, etc.) (Attach photos, maps, etc. for documentation).
bridge Crossing

4. Is an area with primary contact recreation activities or a bathing beach (e.g. state/local parks with swimming, etc.) located near (e.g. within 5 miles upstream and downstream) this site? NO

C. Secondary Contact Water Recreation Evaluation:
- Secondary contact recreation 1: Water recreation activities, such as fishing, commercial and recreational boating, and limited body contact incidental to shoreline activity, not involving a significant risk of water ingestion and that commonly occur.
- Secondary contact recreation 2: Water recreation activities, such as fishing, commercial and recreational boating, and limited body contact incidental to shoreline activity, not involving a significant risk of water ingestion but that occur less frequently than for secondary contact recreation 1 due to (1) physical characteristics of the water body and/or (2) limited public access.

1. Were water recreation activities observed at the site, but the nature of the recreation does not involve a significant risk of ingestion (e.g. secondary contact recreation activities)? ☐ Yes ☑ No secondary contact recreation activities were observed
a. Check the following boxes of secondary contact recreation activities that were observed at the time of the sampling event at the site (Attach photos of activities or lack of activities).
☐ Fishing
☐ Boating-commercial, recreational
☐ Non-whitewater-kayaking, rafting, canoeing
☑ No secondary contact recreation activities were observed
☐ Other secondary contact activities: _____

Field Data Sheets – Basic RUAA Survey

Stream Name Caney Creek above tidal Site: 20
Date: 4/3/10 Time: 1121 – 1218

b. Check the number of individuals observed at the site.
✓ None ☐ 1-10 ☐ 11-20 ☐ 20-50 ☐ greater than 50

c. Check the following that apply regarding the individuals proximity to the water body.
☐ Secondary touch: fishing, pets and related contact with water ☐ In a boat touching water
☐ Body on shore near water within 8 meters (25ft) of water ☐ Body well away from water between 8 and 30 meters (100 ft)

N/A

2. If secondary contact recreation activities are not observed, describe the physical characteristics of the water body that may hinder the frequency of secondary contact (Attach photos, etc. for documentation).
Same

3. If secondary contact recreation activities are observed, how often do water recreational activities occur that do not involve a significant risk of water ingestion? ☐ frequently ☐ infrequently
Please describe how often the activities occur? ☐ Unknown ☐ Never ☐ Daily ☐ Monthly ☐ Yearly

4. If infrequently, what is the reason? ☐ physical characteristics of the water body ☐ limited public access ☐ other
If other, list reasons:

N/A

5. Describe the physical characteristics of the water body that hinders the frequency of secondary contact recreation (depth, etc.) (Attach photos or depth measurements, etc. for documentation).
Same

6. Describe why there is limited public access (e.g. lack of roads, river or stream banks overgrown, etc.) (Attach photos, maps, etc. for documentation).
Same

D. Noncontact Recreation Evaluation
Noncontact recreation applies to water bodies where recreation activities do not involve a significant risk of water ingestion, and where primary and secondary contact recreation uses do not occur because of unsafe conditions, such as barge traffic.

1. Provide site-specific information and documentation (including photographs) regarding unsafe conditions, recreation activities, and presence or absence of water recreation activities.

Field Data Sheets – Basic RUAA Survey

Stream Name Caney Creek above tidal Site: 20
Date: 4-3-10 AH FDS Page 3 of 8 Time: 11:21 - 12:15

E. Stream Channel and Substantial Pools
Please check the following which best describes the river or stream: ☑ Wadeable ☐ Non-wadeable

1. Wadeable Streams
Determine whether or not the average depth at the thalweg is greater than 0.5 meters and if there are substantial pools with a depth of 1 meter or greater. Walk an approximately 300 meter reach (total) at the site and take the following measurements within the 300 meter reach. Measurements should be taken during base flow conditions (sustained or typical dry, warm-weather flows between rainfall events, excluding unusual antecedent conditions of drought or wet weather

Also, take photos facing upstream, downstream, left bank, and right bank at the 30 meters, 150 meters, and 300 meters.
Photos #s (30 meters) Upstream ✓ Downstream ✓ Left Bank ✓ Right Bank ✓
Photos #s (150 meters) Upstream ✓ Downstream ✓ Left Bank ✓ Right Bank ✓
Photos #s (300 meters) Upstream ✓ Downstream ✓ Left Bank ✓ Right Bank ✓

a) Substantial pools - Measure the length of each pool (if > 10 pools only measure 10 pools), the width (at the widest point), and the deepest depth. A substantial pool is considered a pool greater than 10 meters in length for the purposes of a Basic RUAA Survey. If depth and/or width measurements were not attainable, explain why.

	Length (meters)	Width (meters)	Depth (meters)
Pool 1			
Pool 2			
Pool 3			
Pool 4			
Pool 5			
Pool 6			
Pool 7			
Pool 8			
Pool 9			
Pool 10			

b)Average depth at the thalweg –Take depth measurements approximately every 30 meters to calculate an average depth at the thalweg (at least 10 measurements needed). If depth and/or width measurements were not attainable, explain why.

Distance	Depth (meters)	
30 meters	3.6 ft	1.10 m
60 meters	2.8	0.853 m
90 meters	2.95	0.899
120 meters	2.1	0.64
150 meters	1.2	0.366
180 meters	2.35	0.716
210 meters	0.9	0.274
240 meters	2.1	0.64
270 meters	2.3	.701
300 meters	3.2	0.975
Average		0.629 m

Field Data Sheets – Basic RUAA Survey

Stream Name Caney Creek above tidal Site: 20
Date: 4-3-10 Time: 11:21-12:15

c) Stream width - Measure (1) the width at one point which represents the typical average width of the 300 meter reach; (2) the width at the narrowest point of the stream within the 300 meter reach; and (3) the width at the widest point of the stream within the 300 meter reach.

Measurement Type	Width (meters)	
Typical Average Width of 300 meter reach	26'0"	7.92 m
Width at narrowest point of the stream within 300 meter reach	22'7"	6.88 m
Width at the widest point of the stream within 300 meter reach	33'4"	10.15 m

d) Is there sufficient water within a 300 meter stream reach during base flow conditions to support primary contact recreation? ☑ Yes ☐ No
COMMENTS:

2. Non-wadeable Streams
If accessible, take 10 width measurements which represent typical widths of the 300 meter reach. If the water is too deep and not accessible record the estimated average width of the water body.

Also, take photos facing upstream, downstream, left bank, and right bank at .
Photos #s (30 meters) Upstream____ Downstream____ Left Bank ____ Right Bank____
Photos #s (150 meters) Upstream____ Downstream____ Left Bank ____ Right Bank____
Photos #s (300 meters) Upstream____ Downstream____ Left Bank ____ Right Bank____

# Measurements	Width (meters)
1	
2	
3	
4	
5	
6	
7	
8	
9	
10	

Field Data Sheets – Basic RUAA Survey

Stream Name Caney Creek above tidal Site: 20
Date: 4/3/10 Time: 1121-1215

F. Additional RUAA Information

1. Check the following activities observed over the site reach.

- ☐ Drinking or water in mouth
- ☐ Bathing
- ☐ Walking
- ☐ Jogging/running
- ☐ Bicycling
- ☐ Standing
- ☐ Sitting
- ☐ Lying down/sleeping
- ☐ Playing on shoreline
- ☐ Picnicking
- ☐ Motorcycle/ATV
- ☐ Hunting/Trapping
- ☐ Wildlife watching
- ☑ None
- ☐ Other: _____

2. Are there permanent or long-term hydrologic modifications that are constructed and operated in a way that affects the recreational uses? ☐ Yes ☑ No (If yes, please provide supporting documentation and photos.)
Comments: _____

3. Check any channel obstructions that apply (Attach photos).

- ☐ Culverts
- ☐ Barbed wire
- ☐ Utility pipe
- ☐ Fences
- ☐ Dams
- ☐ Other (specify): _____
- ☐ Log jams
- ☐ Thick vegetation
- ☐ Rip rap
- ☐ Low bridges
- ☑ Water control structure
- ☑ None

4. Check all surrounding conditions that promote recreational activities (Attach photos of evidence or unusual items of interest).

- ☐ Campgrounds
- ☐ Playgrounds
- ☑ Rural area
- ☐ Residential
- ☐ National forests
- ☐ Urban/suburban location
- ☐ Golf Course
- ☐ Sports Field
- ☐ Stairs/walkway
- ☐ Boating access (ramps)
- ☐ Beach
- ☑ Bridge crossing
- ☐ Commercial boating
- ☐ Trails/paths (hiking/biking)
- ☐ Paved parking lot
- ☐ Unimproved parking lot
- ☐ Roads (paved/unpaved)
- ☐ Populated area
- ☐ Docks or rafts
- ☐ Commercial outfitter
- ☐ Nearby school
- ☐ Power Line Corridor
- ☐ Parks (national/city/county/state)
- ☐ Public Property
- ☐ Other: _____
- ☐ None of the Above

Comments: _____

5. Check all surrounding conditions that impede recreational activities (Attach photos of evidence or unusual items of interest).

- ☐ Private Property
- ☐ No trespass sign
- ☐ Wildlife
- ☑ Steep slopes
- ☐ No public access
- ☐ No roads
- ☑ Fence
- ☐ Barge/ship traffic
- ☐ Industrial
- ☐ None of the Above
- ☐ Other: _____

Comments: _____

6. Check any indications of human use (Attach photos).

- ☐ Roads
- ☐ Rope swings
- ☐ Dock/platform
- ☑ Foot paths/prints
- ☐ Other: _____
- ☐ RV/ATV Tracks
- ☐ Camping Sites
- ☐ Fire pit/ring
- ☑ Fishing Tackle
- ☐ NPDES Discharge
- ☐ Gates on corridor
- ☐ Children's toys
- ☐ Remnant's of Kid's play
- ☐ Organized event
- ☐ No Human Presence

Comments: _____

Field Data Sheets – Basic RUAA Survey

Stream Name: Caney Creek above tidal Site: 20
Date: 4/3/10 Time: 1121-1215

7. Check all water characteristics that apply (Attach photos).

Aquatic Vegetation: ☐ absent ☐ rare ☑ common ☐ abundant
Algae Cover: ☐ absent ☑ rare ☐ common ☐ abundant
Odor: ☑ none ☐ rare ☐ common ☐ abundant
Color: ☐ clear ☐ green ☐ red ☑ brown ☐ black
Bottom Deposit: ☐ sludge ☐ solids ☑ fine sediments ☐ none ☐ other
Water Surface: ☑ clear ☐ scum ☐ foam ☐ debris ☐ oil
Other:

8. Vertebrates Observed within 300 meter reach

Snakes	☐ None	☑ slight presence 1	☐ moderate presence	☐ large presence
Water Dependent Birds	☑ None	☐ slight presence	☐ moderate presence	☐ large presence
Alligators	☑ None	☐ slight presence	☐ moderate presence	☐ large presence

Comments:

9. Mammals Observed within 300 meter reach

Wild	☑ None	☐ slight presence	☐ moderate presence	☐ large presence
Domesticated Pets	☑ None	☐ slight presence	☐ moderate presence	☐ large presence
Livestock	☑ None	☑ slight presence	☐ moderate presence	☐ large presence
Feral Hogs	☑ None	☐ slight presence	☐ moderate presence	☐ large presence

Comments:

10. Evidence of wild animals or evidence of birds, cattle, hogs, etc.
☑ Tracks ☑ Fecal droppings ☑ Bird nests livestock tracks, ~~coyote~~ canine tracks, skunk odor

11. Garbage Observed

Large garbage in the channel	☑ None	☐ Rare	☐ Common	☐ Abundant
Small garbage in the channel	☐ None	☑ Rare	☐ Common	☐ Abundant
Bank Garbage	☐ None	☑ Rare	☐ Common	☐ Abundant

Briefly describe the kinds of garbage observed: cans, bottles

12. Is the site located in a wildlife preserve with large wildlife (i.e waterfowl) population? ☐ Yes ☑ No

13. Please document any other relevant information regarding recreational activities and the water body in general (for example, area outside of the stream reach evaluated).

Field Data Sheet - Basic RUAA Survey
Stream Flow (Discharge) Measurement

Stream: Caney Creek above tidal Date: 4/3/10
Site: 20 Site
Description: FM 457 @ Caney Creek
Time Begin: 1137 Time End: 1204 Meter Type: Sontek Flowtracker
Observers: J. WRAST, L. Ray Stream Width*: 22.7 Section Width (W): 1.135
Observations:

Section Midpoint (ft)(m)	Section Depth (ft)(m) (cm) (D)	Observational Depth** (ft)(m)	Velocity (V) At Point (ft/s)(m/s)	Velocity (V) Average (ft/s)(m/s)	Flow (Q) (m^3/s)(ft^3/s) Q = (W)(D)(V)
.5675	0.30			0.12	0.041
1.7025	0.35			0.18	0.072
2.8375	0.40			0.21	0.095
3.9725	0.40			0.22	0.100
5.1075	0.40			0.15	0.068
6.2425	0.60			0.14	0.095
7.3775	0.65			0.18	0.133
8.5125	0.85			0.26	0.251
9.6475	0.95			0.26	0.280
10.7825	1.05			0.21	0.250
11.9175	1.00			0.31	0.352
13.0525	1.20			0.40	0.545
14.1875	1.30			0.33	0.449
15.3225	1.40			0.37	0.588
16.4575	1.40			0.25	0.397
17.5925	1.70			0.36	0.695
18.7275	1.85			0.46	0.966
19.8625	1.70			0.38	0.733
20.9975	1.60			0.31	0.563
22.1325	0.70			-0.37	-0.294

KC 10/28/10

Total Q = ~~6.436~~ cfs
6.379

E MES

Field Data Sheets – Basic RUAA Survey

(should be completed for each site)

Data Collectors & Contact Information: L. Ray, J. Wrast, A. Hughes, R. Thompson	
Date & Time: 4/3/2010 0951-1116	County Name: Matagorda
Stream Name: Caney Creek above tidal	
Segment No. or nearest downstream Segment No.: 1305	
Description of Site: FM 521 @ Caney Creek Site: 21	

At any point during the Basic RUAA Survey it becomes apparent that primary contact recreation is clearly the use for the water body the investigator should stop conducting the UAA.

A. Stream Characteristics:

1. Check the following channel flow status that applies.
☐ dry ☐ no flow ☑ low ☐ normal ☐ high ☐ flooded

2. Check the following stream type that applies on the day of the survey:
☐ Ephemeral: A stream which flows only during or immediately after a rainfall event, and contains no refuge pools capable of sustaining a viable community of aquatic organisms.
☐ Intermittent: A stream which has a period of zero flow for at least one week during most years. Where flow records are available, a stream with a 7Q2 flow of less than 0.1 cubic feet per second is considered intermittent.
☐ Intermittent w/ perennial pools: An intermittent stream which maintains persistent pools even when flow in the stream is less than 0.1 cubic feet per second.
☑ Perennial: A stream which flows continuously throughout the year. Perennial streams have a 7Q2 equal to or greater than 0.1 cubic feet per second.
☐ Designated or unclassified tidal stream: A stream that is tidally influenced. If you checked this box, you will need to contact the Water Quality Standards Group and evaluate whether or not a bathing beach is located along the tidal stream and whether or not a bathing beach is located along the estuary, bay or Gulf water that the tidal stream flows into.

3. Streamflow
Use USGS gage data (if a gage is located at a site or within a quarter mile of a site) or use the Stream Flow (Discharge) Measurement Form and follow the procedures outlined in the most recent TCEQ Surface Water Quality Monitoring Procedures, Volume 1, RG-415. If USGS gage data is used for a site, include that information as an attachment and list the streamflow on the sampling date below. If the stream flow taken at one site is representative of the flow at another site(s), then that flow can be used as the observed flow and should be documented below. If the stream flow measured at one site is different from another site, then stream flow should be taken at both sites. ~~5.750~~ cfs KC 10/28/10
5.746

4. Water Quality Data (Field Parameters)
Field parameters should be collected in accordance with the procedures outlined in the most recent TCEQ Surface Water Quality Monitoring Procedures, Volume 1.
Air Temp 26.5 °C Water Temp 22.5 °C Secchi 0.37 m

5. Riparian Zone (Mark dominant categories with L (Left Bank) and R (Right Bank). Bank orientation is determined by the investigator facing downstream.)

_____ Forest	_____ Urban	_____ Rip rap
_____ Shrub dominated corridor	_____ Pasture	_____ Concrete
_____ Herbaceous marsh	_____ Row crops	Other (specify): _____
RL ✓ Mowed/maintained corridor	_____ Denuded/Eroded bank	

6. Ease of bank access to the water body: ☐ Easy ☑ Moderately easy ☐ Moderately difficult ☐ Difficult

7. Please describe access opportunities or explain why the site is not easily accessible (Attach photos for documentation):
Heavy A/most waist-deep vegetation on Banks.
Moderately Steep

8. Dominant Primary Substrate
☐ Cobble ☐ Sand ☐ Silt ☑ Mud/Clay ☐ Gravel ☐ Bedrock ☐ Rip rap ☐ Concrete

E KC
Q M.S.

Field Data Sheets – Basic RUAA Survey

Stream Name Caney Creek above tidal Site: 21
Date: 4/3/10 Time: 0951 - 1116

B. Primary Contact Water Recreation Evaluation:
- Primary contact recreation draft definition: Water recreation activities, such as wading by children, swimming, water skiing, diving, tubing, surfing, and whitewater kayaking, canoeing, and rafting, involving a significant risk of ingestion of water.

1. Were water recreation activities that involve a significant risk of ingestion (full body immersion) observed at this site?
☐ Yes ☑ No primary contact recreation activities were observed
a. Check the following boxes of primary contact recreation activities observed at the time of the sampling event at the site (Attach photos of the activities or lack of activities).

☐ Wading-Children	☐ Tubing	☑ No primary contact activities that commonly occur were observed
☐ Wading-Adults	☐ Surfing	
☐ Swimming	☐ Whitewater-kayaking, canoeing, rafting	
☐ Water skiing	☐ Other: _____	
☐ Diving	☐ frequent public swimming-created by publicly owned land or commercial operations	

b. Check the number of individuals observed at the site: ☑ None ☐ 1-10 ☐ 11-20 ☐ 20-50 ☐ greater than 50

c. Check the following that apply regarding the individuals proximity to the water body.
☐ Water in mouth or nose of the individual ☐ Primary touch: Individual's body (or portion) immersed in water
☐ Secondary touch: fishing, pets and related contact with water ☐ Individual is in a boat touching water
☐ Individual is on shore near water within 8 meters (25ft) of water ☐ Individual is well away from water between 8 and 30 meters (100 ft) ☑ Not applicable

2. If primary contact recreation activities are not observed, describe the physical characteristics of the water body that may hinder the frequency of primary contact (depth, etc.) (Attach photos, etc. for documentation).
Thick bank vegetation; Relatively steep slope; rocks, debris made walking difficult

3. Describe if there is public access (e.g. parks, roads, etc.) (Attach photos, maps, etc. for documentation).
Bridge crossing; CR 160 runs along creek; upstream of creek barb-wire fence runs to creek

4. Is an area with primary contact recreation activities or a bathing beach (e.g. state/local parks with swimming, etc.) located near (e.g. within 5 miles upstream and downstream) this site? no

C. Secondary Contact Water Recreation Evaluation:
- Secondary contact recreation 1: Water recreation activities, such as fishing, commercial and recreational boating, and limited body contact incidental to shoreline activity, not involving a significant risk of water ingestion and that commonly occur.
- Secondary contact recreation 2: Water recreation activities, such as fishing, commercial and recreational boating, and limited body contact incidental to shoreline activity, not involving a significant risk of water ingestion but that occur less frequently than for secondary contact recreation 1 due to (1) physical characteristics of the water body and/or (2) limited public access.

1. Were water recreation activities observed at the site, but the nature of the recreation does not involve a significant risk of ingestion (e.g. secondary contact recreation activities)? ☐ Yes ☑ No secondary contact recreation activities were observed
a. Check the following boxes of secondary contact recreation activities that were observed at the time of the sampling event at the site (Attach photos of activities or lack of activities).
☐ Fishing
☐ Boating-commercial, recreational
☐ Non-whitewater-kayaking, rafting, canoeing
☑ No secondary contact recreation activities were observed
☐ Other secondary contact activities: _____

Field Data Sheets – Basic RUAA Survey

Stream Name Caney Creek above tidal Site: 21
Date: 4/3/10 Time: 0951-1116

b. Check the number of individuals observed at the site.
☑ None ☐ 1-10 ☐ 11-20 ☐ 20-50 ☐ greater than 50

c. Check the following that apply regarding the individuals proximity to the water body.
☐ Secondary touch: fishing, pets and related contact with water ☐ In a boat touching water
☐ Body on shore near water within 8 meters (25ft) of water ☐ Body well away from water between 8 and 30 meters (100 ft) N/A

2. If secondary contact recreation activities are not observed, describe the physical characteristics of the water body that may hinder the frequency of secondary contact (Attach photos, etc. for documentation).
Same

3. If secondary contact recreation activities are observed, how often do water recreational activities occur that do not involve a significant risk of water ingestion? ☐ frequently ☐ infrequently
Please describe how often the activities occur? ☑ Unknown ☐ Never ☐ Daily ☐ Monthly ☐ Yearly

4. If infrequently, what is the reason? ☐ physical characteristics of the water body ☐ limited public access ☐ other
If other, list reasons: _____

5. Describe the physical characteristics of the water body that hinders the frequency of secondary contact recreation (depth, etc.) (Attach photos or depth measurements, etc. for documentation).
Same

6. Describe why there is limited public access (e.g. lack of roads, river or stream banks overgrown, etc.) (Attach photos, maps, etc. for documentation).
Same

D. Noncontact Recreation Evaluation

Noncontact recreation applies to water bodies where recreation activities do not involve a significant risk of water ingestion, and where primary and secondary contact recreation uses do not occur because of unsafe conditions, such as barge traffic.

1. Provide site-specific information and documentation (including photographs) regarding unsafe conditions, recreation activities, and presence or absence of water recreation activities.

Field Data Sheets – Basic RUAA Survey

Stream Name Caney Creek above tidal Site: 21
Date: 4/3/10 FDS Page 3 of 8 Time: 9:51 – 11:16

E. Stream Channel and Substantial Pools
Please check the following which best describes the river or stream: ☑ Wadeable ☐ Non-wadeable

1. Wadeable Streams
Determine whether or not the average depth at the thalweg is greater than 0.5 meters and if there are substantial pools with a depth of 1 meter or greater. Walk an approximately 300 meter reach (total) at the site and take the following measurements within the 300 meter reach. Measurements should be taken during base flow conditions (sustained or typical dry, warm-weather flows between rainfall events, excluding unusual antecedent conditions of drought or wet weather

Also, take photos facing upstream, downstream, left bank, and right bank at the 30 meters, 150 meters, and 300 meters.
1 Photos #s (30 meters) Upstream ✓ Downstream ✓ Left Bank ✓ Right Bank ✓
3 Photos #s (150 meters) Upstream ✓ Downstream ✓ Left Bank ✓ Right Bank ✓
2 Photos #s (300 meters) Upstream ✓ Downstream ✓ Left Bank ✓ Right Bank ✓ took 300 meters pictures first

a) Substantial pools - Measure the length of each pool (if > 10 pools only measure 10 pools), the width (at the widest point), and the deepest depth. A substantial pool is considered a pool greater than 10 meters in length for the purposes of a Basic RUAA Survey. If depth and/or width measurements were not attainable, explain why. N/A

	Length (meters)	Width (meters)	Depth (meters)
Pool 1			
Pool 2			
Pool 3			
Pool 4			
Pool 5			
Pool 6			
Pool 7			
Pool 8			
Pool 9			
Pool 10			

b)Average depth at the thalweg –Take depth measurements approximately every 30 meters to calculate an average depth at the thalweg (at least 10 measurements needed). If depth and/or width measurements were not attainable, explain why.

Distance	Depth (meters)	
30 meters	2.8 ft	0.853 m
60 meters	1.95	0.594 m
90 meters	2.9	0.884 m
120 meters	2.1	0.64 m
150 meters	2.0	0.61 m
180 meters	2.4	0.732 m
210 meters	2.45	0.747 m
240 meters	2.85	0.869 m
270 meters	2.75	0.838 m
300 meters	1.9	0.579 m
Average		0.735 m

Field Data Sheets – Basic RUAA Survey

Stream Name Caney Creek above tidal Site: 21
Date: 4/3/10 Time: 0951-1116

c) Stream width - Measure (1) the width at one point which represents the typical average width of the 300 meter reach; (2) the width at the narrowest point of the stream within the 300 meter reach; and (3) the width at the widest point of the stream within the 300 meter reach.

Measurement Type	Width (meters)	
Typical Average Width of 300 meter reach	29'	8.84 m
Width at narrowest point of the stream within 300 meter reach	18'10"	5.74 m
Width at the widest point of the stream within 300 meter reach	32'3"	9.83 m

d) Is there sufficient water within a 300 meter stream reach during base flow conditions to support primary contact recreation? ☑ Yes ☐ No
COMMENTS:

2. Non-wadeable Streams
If accessible, take 10 width measurements which represent typical widths of the 300 meter reach. If the water is too deep and not accessible record the estimated average width of the water body.

Also, take photos facing upstream, downstream, left bank, and right bank at .
Photos #s (30 meters) Upstream____ Downstream____ Left Bank ____ Right Bank____
Photos #s (150 meters) Upstream____ Downstream____ Left Bank ____ Right Bank____
Photos #s (300 meters) Upstream____ Downstream____ Left Bank ____ Right Bank____

# Measurements	Width (meters)
1	
2	
3	
4	
5	
6	
7	
8	
9	
10	

Field Data Sheets – Basic RUAA Survey

Stream Name Caney Creek above tidal Site: 21
Date: 4/3/10 Time: 0951 – 1116

F. Additional RUAA Information

1. Check the following activities observed over the site reach.

- ☐ Drinking or water in mouth
- ☐ Bathing
- ☐ Walking
- ☐ Jogging/running
- ☐ Bicycling
- ☐ Standing
- ☐ Sitting
- ☐ Lying down/sleeping
- ☐ Playing on shoreline
- ☐ Picnicking
- ☐ Motorcycle/ATV
- ☐ Hunting/Trapping
- ☐ Wildlife watching
- ☑ None
- ☐ Other: _____

2. Are there permanent or long-term hydrologic modifications that are constructed and operated in a way that affects the recreational uses? ☐ Yes ☑ No (If yes, please provide supporting documentation and photos.)
Comments: _____

3. Check any channel obstructions that apply (Attach photos).

- ☐ Culverts
- ☐ Barbed wire
- ☐ Utility pipe
- ☐ Fences
- ☐ Dams
- ☐ Other (specify): _____
- ☐ Log jams
- ☐ Thick vegetation
- ☐ Rip rap
- ☐ Low bridges
- ☐ Water control structure
- ☑ None

4. Check all surrounding conditions that promote recreational activities (Attach photos of evidence or unusual items of interest).

- ☐ Campgrounds
- ☐ Playgrounds
- ☐ Rural area
- ☑ Residential
- ☐ National forests
- ☐ Urban/suburban location
- ☐ Golf Course
- ☐ Sports Field
- ☐ Stairs/walkway
- ☐ Boating access (ramps)
- ☐ Beach
- ☑ Bridge crossing
- ☐ Commercial boating
- ☐ Trails/paths (hiking/biking)
- ☐ Paved parking lot
- ☐ Unimproved parking lot
- ☑ Roads (paved/unpaved)
- ☐ Populated area
- ☐ Docks or rafts
- ☐ Commercial outfitter
- ☐ Nearby school
- ☐ Power Line Corridor
- ☐ Parks (national/city/county/state)
- ☐ Public Property
- ☐ Other: _____
- ☑ None of the Above

NO [illegible] LR 4/3/10

Comments: _____

5. Check all surrounding conditions that impede recreational activities (Attach photos of evidence or unusual items of interest).

- ☐ Private Property
- ☐ No trespass sign
- ☐ Wildlife
- ☐ Steep slopes
- ☐ No public access
- ☐ No roads
- ☑ Fence
- ☐ Barge/ship traffic
- ☐ Industrial
- ☐ None of the Above
- ☐ Other: _____

Comments: Fence upstream down to water's edge.

6. Check any indications of human use (Attach photos).

- ☐ Roads
- ☐ Rope swings
- ☐ Dock/platform
- ☐ Foot paths/prints
- ☐ Other: _____
- ☐ RV/ATV Tracks
- ☐ Camping Sites
- ☐ Fire pit/ring
- ☑ Fishing Tackle
- ☐ NPDES Discharge
- ☐ Gates on corridor
- ☐ Children's toys
- ☐ Remnant's of Kid's play
- ☐ Organized event
- ☐ No Human Presence

Comments: leader with hook, trout line

Field Data Sheets – Basic RUAA Survey

Stream Name: Caney Creek above tidal Site: 21
Date: 4/3/18 Time: 0951 - 1116

7. Check all water characteristics that apply (Attach photos).

Aquatic Vegetation: ☐ absent ☐ rare ☑ common ☐ abundant
Algae Cover: ☐ absent ☑ rare ☐ common ☐ abundant
Odor: ☑ none ☐ rare ☐ common ☐ abundant
Color: ☐ clear ☐ green ☐ red ☑ brown ☐ black
Bottom Deposit: ☐ sludge ☐ solids ☑ fine sediments ☐ none ☐ other
Water Surface: ☑ clear ☐ scum ☐ foam ☐ debris ☐ oil
Other:

8. Vertebrates Observed within 300 meter reach

Snakes	☑ None	☐ slight presence	☐ moderate presence	☐ large presence
Water Dependent Birds	☑ None	☐ slight presence	☐ moderate presence	☐ large presence
Alligators	☑ None	☐ slight presence	☐ moderate presence	☐ large presence

Comments:

9. Mammals Observed within 300 meter reach

Wild	☑ None	☐ slight presence	☐ moderate presence	☐ large presence
Domesticated Pets	☐ None	☑ slight presence	☐ moderate presence	☐ large presence
Livestock	☐ None	☑ slight presence	☐ moderate presence	☐ large presence
Feral Hogs	☑ None	☐ slight presence	☐ moderate presence	☐ large presence

Comments:

10. Evidence of wild animals or evidence of birds, cattle, hogs, etc.
☑ Tracks ☑ Fecal droppings ☑ Bird nests Canine tracks, swallows nesting under bridge

11. Garbage Observed

Large garbage in the channel	☐ None	☑ Rare	☐ Common	☐ Abundant
Small garbage in the channel	☐ None	☑ Rare	☐ Common	☐ Abundant
Bank Garbage	☐ None	☑ Rare	☐ Common	☐ Abundant

Briefly describe the kinds of garbage observed: Tire in water, PVC pole, cans, wrappers

12. Is the site located in a wildlife preserve with large wildlife (i.e waterfowl) population? ☐ Yes ☑ No

13. Please document any other relevant information regarding recreational activities and the water body in general (for example, area outside of the stream reach evaluated).

Field Data Sheet - Basic RUAA Survey

Stream Flow (Discharge) Measurement

Stream: Caney Creek above tidal Date: 4/3/2010

Site: 21 Site

Description: FM 521 @ Caney Creek

Time Begin: 1032 Time End: 1054 Meter Type: Sontek Flowtracker

Observers: J. WRAST, L. Ray Stream Width*: 17 ft. Section Width (W): 0.85

Observations:

Section Midpoint (ft)(m)	Section Depth (ft)(m) (cm) (D)	Observational Depth** (ft)(m)	Velocity (V) At Point (ft/s)(m/s)	Velocity (V) Average (ft/s)(m/s)	Flow (Q) (m^3/s)(ft^3/s) Q = (W)(D)(V)	
0.425	0.25	LR 4/3/10 ~~0.25~~	LR 4/3/10 ~~-0.00~~	-0.00	0.000	Note: Eddy along Bank
1.275	0.40			-0.24	-0.082	
2.125	0.50			-0.06	-0.026	
2.975	0.65			0.62	0.343	
3.825	1.05			0.59	0.527	
4.675	1.00			0.32	0.272	
5.525	0.80			1.36	0.925	
6.375	1.00			0.62	0.527	
7.225	~~0.62~~ 1.10	LR 4/3/10		1.33	1.244	
8.075	1.00			1.48	1.258	
8.925	1.00			0.37	0.315	
9.775	1.10			0.40	0.374	
10.625	1.00			0.27	0.230	
11.475	1.00			0.20	0.170	
12.325	0.85			-0.10	-0.072	Eddy on Other Bank
13.175	0.75			0.02	0.013	
14.025	0.70			-0.05	-0.030	
14.875	0.65			-0.22	-0.122	
15.725	~~0.40~~	~~0.50~~ LR 4/3/10		-0.28	-0.119	
16.575	N/A					Too Shallow to sample

Total Q = ~~5.726~~ KC 10/28/10 cfs

~~5.750~~ KC

5.746

E MES

1

Field Data Sheets – Basic RUAA Survey

(should be completed for each site)

Data Collectors & Contact Information:	L. Ray, D. Ramirez, P. Lokomath, C. Gauthier
Date & Time: 5/22/2010 1243 – 13:33	County Name: Wharton
Stream Name: Caney Creek above tidal	
Segment No. or nearest downstream Segment No.: 1305	
Description of Site: Knox and N. Caney trails @ Caney Creek	

At any point during the Basic RUAA Survey it becomes apparent that primary contact recreation is clearly the use for the water body the investigator should stop conducting the UAA.

A. Stream Characteristics:

1. Check the following channel flow status that applies.
☐ dry ☐ no flow ☐ low ☒ normal ☐ high ☐ flooded

2. Check the following stream type that applies on the day of the survey:
Ephemeral: A stream which flows only during or immediately after a rainfall event, and contains no refuge pools capable of sustaining a viable community of aquatic organisms.
☐ Intermittent: A stream which has a period of zero flow for at least one week during most years. Where flow records are available, a stream with a 7Q2 flow of less than 0.1 cubic feet per second is considered intermittent.
☐ Intermittent w/ perennial pools: An intermittent stream which maintains persistent pools even when flow in the stream is less than 0.1 cubic feet per second.
☒ Perennial: A stream which flows continuously throughout the year. Perennial streams have a 7Q2 equal to or greater than 0.1 cubic feet per second.
☐ Designated or unclassified tidal stream: A stream that is tidally influenced. If you checked this box, you will need to contact the Water Quality Standards Group and evaluate whether or not a bathing beach is located along the tidal stream and whether or not a bathing beach is located along the estuary, bay or Gulf water that the tidal stream flows into.

3. Streamflow
Use USGS gage data (if a gage is located at a site or within a quarter mile of a site) or use the Stream Flow (Discharge) Measurement Form and follow the procedures outlined in the most recent TCEQ Surface Water Quality Monitoring Procedures, Volume 1, RG-415. If USGS gage data is used for a site, include that information as an attachment and list the streamflow on the sampling date below. If the stream flow taken at one site is representative of the flow at another site(s), then that flow can be used as the observed flow and should be documented below. If the stream flow measured at one site is different from another site, then stream flow should be taken at both sites. 0.00 cfs ~~no flow taken, only avelocity = 0.00~~ KC 10/28/10

4. Water Quality Data (Field Parameters)
Field parameters should be collected in accordance with the procedures outlined in the most recent TCEQ Surface Water Quality Monitoring Procedures, Volume 1.
Air Temp 30 °C Water Temp 29 °C Secchi .728 m

5. Riparian Zone (Mark dominant categories with L (Left Bank) and R (Right Bank). Bank orientation is determined by the investigator facing downstream.)

___ Forest	___ Urban	___ Rip rap
R Shrub dominated corridor	___ Pasture	___ Concrete
___ Herbaceous marsh	___ Row crops	Other (specify): ___
L, R Mowed/maintained corridor	___ Denuded/Eroded bank	

6. Ease of bank access to the water body: ☒ Easy ☐ Moderately easy ☐ Moderately difficult ☐ Difficult

7. Please describe access opportunities or explain why the site is not easily accessible (Attach photos for documentation): Easy access, mowed down to water

8. Dominant Primary Substrate
☐ Cobble ☐ Sand ☐ Silt ☒ Mud/Clay ☐ Gravel ☐ Bedrock ☐ Rip rap ☐ Concrete

QSD Q2 PL

Field Data Sheets – Basic RUAA Survey

Stream Name Caney Creek above tidal Site: 1
Date: 5/22/10 Time: 1243

B. Primary Contact Water Recreation Evaluation:
- Primary contact recreation draft definition: Water recreation activities, such as wading by children, swimming, water skiing, diving, tubing, surfing, and whitewater kayaking, canoeing, and rafting, involving a significant risk of ingestion of water.

1. Were water recreation activities that involve a significant risk of ingestion (full body immersion) observed at this site?
☐ Yes ☒ No primary contact recreation activities were observed
a. Check the following boxes of primary contact recreation activities observed at the time of the sampling event at the site (Attach photos of the activities or lack of activities).

☐ Wading-Children	☐ Tubing	☒ No primary contact activities that commonly occur were observed
☐ Wading-Adults	☐ Surfing	
☐ Swimming	☐ Whitewater-kayaking, canoeing, rafting	
☐ Water skiing	☐ Other: _____	
☐ Diving	☐ frequent public swimming-created by publicly owned land or commercial operations	

b. Check the number of individuals observed at the site: ☐ None ☒ 1-10 ☐ 11-20 ☐ 20-50 ☐ greater than 50

c. Check the following that apply regarding the individuals proximity to the water body.
☐ Water in mouth or nose of the individual ☐ Primary touch: Individual's body (or portion) immersed in water
☐ Secondary touch: fishing, pets and related contact with water ☐ Individual is in a boat touching water
☒ Individual is on shore near water within 8 meters (25ft) of water ☐ Individual is well away from water between 8 and 30 meters (100 ft) ☐ Not applicable

Children in yard 3 people stopped on bridge to ask what we were doing

2. If primary contact recreation activities are not observed, describe the physical characteristics of the water body that may hinder the frequency of primary contact (depth, etc.) (Attach photos, etc. for documentation).
deeper than 4 ft.

3. Describe if there is public access (e.g. parks, roads, etc.) (Attach photos, maps, etc. for documentation).
Road across bridge, stream runs through private yard.

4. Is an area with primary contact recreation activities or a bathing beach (e.g. state/local parks with swimming, etc.) located near (e.g. within 5 miles upstream and downstream) this site? ~~N/A~~ no

C. Secondary Contact Water Recreation Evaluation:
- Secondary contact recreation 1: Water recreation activities, such as fishing, commercial and recreational boating, and limited body contact incidental to shoreline activity, not involving a significant risk of water ingestion and that commonly occur.
- Secondary contact recreation 2: Water recreation activities, such as fishing, commercial and recreational boating, and limited body contact incidental to shoreline activity, not involving a significant risk of water ingestion but that occur less frequently than for secondary contact recreation 1 due to (1) physical characteristics of the water body and/or (2) limited public access.

1. Were water recreation activities observed at the site, but the nature of the recreation does not involve a significant risk of ingestion (e.g. secondary contact recreation activities)? ☐ Yes ☒ No secondary contact recreation activities were observed
a. Check the following boxes of secondary contact recreation activities that were observed at the time of the sampling event at the site (Attach photos of activities or lack of activities).
☐ Fishing
☐ Boating-commercial, recreational
☐ Non-whitewater-kayaking, rafting, canoeing
☒ No secondary contact recreation activities were observed
☐ Other secondary contact activities: _____

Field Data Sheets – Basic RUAA Survey

Stream Name Caney Creek above tidal Site: 1
Date: 5/22/10 Time: 1243

b. Check the number of individuals observed at the site.
☐ None ☒ 1-10 ☐ 11-20 ☐ 20-50 ☐ greater than 50

c. Check the following that apply regarding the individuals proximity to the water body.
☐ Secondary touch: fishing, pets and related contact with water ☐ In a boat touching water
☒ Body on shore near water within 8 meters (25ft) of water ☒ Body well away from water between 8 and 30 meters (100 ft) Kids on shore, 3 people stopped in cars to ask us what we were doing.

2. If secondary contact recreation activities are not observed, describe the physical characteristics of the water body that may hinder the frequency of secondary contact (Attach photos, etc. for documentation).
Same

3. If secondary contact recreation activities are observed, how often do water recreational activities occur that do not involve a significant risk of water ingestion? ☐ frequently ☐ infrequently
Please describe how often the activities occur? ☒ Unknown ☐ Never ☐ Daily ☐ Monthly ☐ Yearly

4. If infrequently, what is the reason? ☐ physical characteristics of the water body ☐ limited public access ☐ other
If other, list reasons: N/A

5. Describe the physical characteristics of the water body that hinders the frequency of secondary contact recreation (depth, etc.) (Attach photos or depth measurements, etc. for documentation).
Same

6. Describe why there is limited public access (e.g. lack of roads, river or stream banks overgrown, etc.) (Attach photos, maps, etc. for documentation).
private property on each side of creek

D. Noncontact Recreation Evaluation

Noncontact recreation applies to water bodies where recreation activities do not involve a significant risk of water ingestion, and where primary and secondary contact recreation uses do not occur because of unsafe conditions, such as barge traffic.

1. Provide site-specific information and documentation (including photographs) regarding unsafe conditions, recreation activities, and presence or absence of water recreation activities.

N/A

Field Data Sheets – Basic RUAA Survey

Stream Name Caney Creek above tidal Site: 1
Date: 5-22-10 FDS Page 3 of 8 Time: 1248-1333

E. Stream Channel and Substantial Pools
Please check the following which best describes the river or stream: ☒ Wadeable ☐ Non-wadeable

1. Wadeable Streams
Determine whether or not the average depth at the thalweg is greater than 0.5 meters and if there are substantial pools with a depth of 1 meter or greater. Walk an approximately 300 meter reach (total) at the site and take the following measurements within the 300 meter reach. Measurements should be taken during base flow conditions (sustained or typical dry, warm-weather flows between rainfall events, excluding unusual antecedent conditions of drought or wet weather

Also, take photos facing upstream, downstream, left bank, and right bank at the 30 meters, 150 meters, and 300 meters.

2 sets → Photos #s (30 meters) Upstream ✓ Downstream ✓ Left Bank ✓ Right Bank ✓
Photos #s (150 meters) Upstream ✓ Downstream ✓ Left Bank ✓ Right Bank ✓
Photos #s (300 meters) Upstream ✓ Downstream ✓ Left Bank ✓ Right Bank ✓

a) Substantial pools - Measure the length of each pool (if > 10 pools only measure 10 pools), the width (at the widest point), and the deepest depth. A substantial pool is considered a pool greater than 10 meters in length for the purposes of a Basic RUAA Survey. If depth and/or width measurements were not attainable, explain why.

	Length (meters)	Width (meters)	Depth (meters)
Pool 1			
Pool 2			
Pool 3			
Pool 4			
Pool 5			
Pool 6			
Pool 7			
Pool 8			
Pool 9			
Pool 10			

b)Average depth at the thalweg –Take depth measurements approximately every 30 meters to calculate an average depth at the thalweg (at least 10 measurements needed). If depth and/or width measurements were not attainable, explain why.

Distance	Depth (meters)	
30 meters	2.5 ft	0.762m
60 meters	2.79	0.850 m
90 meters	1.7	0.518m
120 meters	>4.0ft	>1.219m
150 meters	>4.0	>1.219m
180 meters	>4.0	>1.219m
210 meters	>4	>1.219m
240 meters	>4	>1.219m
270 meters	>4	>1.219m
300 meters	>4	>1.219m
Average		1.0663m

steep, slippery slope!

Kid said they were wading on Thur. in water

Field Data Sheets – Basic RUAA Survey

Stream Name Caney Creek above tidal Site: 1
Date: 5-22-10 Time: 12:48-13:33

c) Stream width - Measure (1) the width at one point which represents the typical average width of the 300 meter reach; (2) the width at the narrowest point of the stream within the 300 meter reach; and (3) the width at the widest point of the stream within the 300 meter reach.

Measurement Type	Width (meters)	
Typical Average Width of 300 meter reach	33m	10.058
Width at narrowest point of the stream within 300 meter reach	24m	7.315
Width at the widest point of the stream within 300 meter reach	39m	11.887

d) Is there sufficient water within a 300 meter stream reach during base flow conditions to support primary contact recreation? ☒ Yes ☐ No
COMMENTS:

2. Non-wadeable Streams n/a
If accessible, take 10 width measurements which represent typical widths of the 300 meter reach. If the water is too deep and not accessible record the estimated average width of the water body.

Also, take photos facing upstream, downstream, left bank, and right bank at .
Photos #s (30 meters) Upstream____ Downstream____ Left Bank ____ Right Bank____
Photos #s (150 meters) Upstream____ Downstream____ Left Bank ____ Right Bank____
Photos #s (300 meters) Upstream____ Downstream____ Left Bank ____ Right Bank____

# Measurements	Width (meters)
1	
2	
3	
4	
5	
6	
7	
8	
9	
10	

Field Data Sheets – Basic RUAA Survey

Stream Name: Caney Creek above tidal Site: 1
Date: 5/22/10 Time: 1243

F. Additional RUAA Information

1. Check the following activities observed over the site reach.

- ☐ Drinking or water in mouth
- ☐ Bathing
- ☒ Walking
- ☐ Jogging/running
- ☐ Bicycling
- ☒ Standing
- ☐ Sitting
- ☐ Lying down/sleeping
- ☐ Playing on shoreline
- ☐ Picnicking
- ☒ Motorcycle/ATV → dune buggy
- ☐ Hunting/Trapping
- ☐ Wildlife watching
- ☐ None
- ☒ Other: Driving across bridge

2. Are there permanent or long-term hydrologic modifications that are constructed and operated in a way that affects the recreational uses? ☒ Yes ☐ No (If yes, please provide supporting documentation and photos.)
Comments:

3. Check any channel obstructions that apply (Attach photos).

- ☒ Culverts
- ☐ Barbed wire
- ☐ Utility pipe
- ☐ Fences
- ☐ Dams
- ☐ Other (specify):
- ☐ Log jams
- ☐ Thick vegetation
- ☐ Rip rap
- ☐ Low bridges
- ☐ Water control structure
- ☐ None

4. Check all surrounding conditions that promote recreational activities (Attach photos of evidence or unusual items of interest).

- ☐ Campgrounds
- ☐ Playgrounds
- ☐ Rural area
- ☒ Residential
- ☐ National forests
- ☐ Urban/suburban location
- ☐ Golf Course
- ☐ Sports Field
- ☐ Stairs/walkway
- ☒ Boating access (ramps) private
- ☐ Beach
- ☒ Bridge crossing
- ☐ Commercial boating
- ☐ Trails/paths (hiking/biking)
- ☐ Paved parking lot
- ☐ Unimproved parking lot
- ☒ Roads (paved/unpaved)
- ☒ Populated area
- ☐ Docks or rafts
- ☐ Commercial outfitter
- ☐ Nearby school
- ☐ Power Line Corridor
- ☐ Parks (national/city/county/state)
- ☐ Public Property
- ☐ Other:
- ☐ None of the Above

Comments:

5. Check all surrounding conditions that impede recreational activities (Attach photos of evidence or unusual items of interest).

- ☒ Private Property
- ☐ No trespass sign
- ☐ Wildlife
- ☐ Steep slopes
- ☐ No public access
- ☐ No roads
- ☐ Fence
- ☐ Barge/ship traffic
- ☐ Industrial
- ☐ None of the Above
- ☐ Other:

Comments:

6. Check any indications of human use (Attach photos).

- ☒ Roads
- ☐ Rope swings
- ☐ Dock/platform
- ☐ Foot paths/prints
- ☐ RV/ATV Tracks
- ☐ Camping Sites
- ☐ Fire pit/ring
- ☐ Fishing Tackle
- ☐ NPDES Discharge
- ☐ Gates on corridor
- ☒ Children's toys
- ☐ Remnant's of Kid's play
- ☐ Organized event
- ☐ No Human Presence
- ☒ Other:

Comments: paddle boats on bank

Field Data Sheets – Basic RUAA Survey

Stream Name Caney Creek above tidal Site: 1
Date: 5/22/10 Time: 1243

7. Check all water characteristics that apply (Attach photos).
Aquatic Vegetation: ☐ absent ☐ rare ☐ common ☒ abundant
Algae Cover: ☒ absent ☐ rare ☐ common ☐ abundant
Odor: ☒ none ☐ rare ☐ common ☐ abundant
Color: ☐ clear ☐ green ☐ red ☒ brown ☐ black
Bottom Deposit: ☐ sludge ☐ solids ☒ fine sediments ☐ none ☐ other
Water Surface: ☐ clear ☒ scum ☐ foam ☐ debris ☐ oil
Other: The surface had abundant Azolla

8. Vertebrates Observed within 300 meter reach

Snakes	☒ None	☐ slight presence	☐ moderate presence	☐ large presence
Water Dependent Birds	☐ None	☒ slight presence	☐ moderate presence	☐ large presence
Alligators	☒ None	☐ slight presence	☐ moderate presence	☐ large presence

Comments:

9. Mammals Observed within 300 meter reach

Wild	☒ None	☐ slight presence	☐ moderate presence	☐ large presence
Domesticated Pets	☐ None	☐ slight presence	☒ moderate presence	☐ large presence
Livestock	☒ None	☐ slight presence	☐ moderate presence	☐ large presence
Feral Hogs	☒ None	☐ slight presence	☐ moderate presence	☐ large presence

Comments:

10. Evidence of wild animals or evidence of birds, cattle, hogs, etc.
☒ Tracks ☐ Fecal droppings ☐ Bird nests

11. Garbage Observed

Large garbage in the channel	☒ None	☐ Rare	☐ Common	☐ Abundant
Small garbage in the channel	☐ None	☒ Rare	☐ Common	☐ Abundant
Bank Garbage	☐ None	☒ Rare	☐ Common	☐ Abundant

Briefly describe the kinds of garbage observed: Trash, cans, etc.

12. Is the site located in a wildlife preserve with large wildlife (i.e waterfowl) population? ☐ Yes ☒ No

13. Please document any other relevant information regarding recreational activities and the water body in general (for example, area outside of the stream reach evaluated).

Field Data Sheet - Basic RUAA Survey

Stream Flow (Discharge) Measurement

Stream: Caney Creek above tidal Date: 5/22/10

Site: 1 Site

Description: Knox and N. Caney trails @ Caney Creek

Time Begin: 12:57 Time End: 1306 Meter Type: Sontek Flowtracker

Observers: L. Ray, C. Gauthier ~~Stream~~ culvert Width*: 4.4 Section Width (W):

Observations: thick water hyaciuth

Section Midpoint (ft) (m)	Section Depth (ft)(m) (cm) (D)	Observational Depth** (ft)(m)	Velocity (V) At Point (ft/s)(m/s)	Velocity (V) Average (ft/s)(m/s)	Flow (Q) (m^3/s)(ft^3/s) Q = (W)(D)(V)
	1.7		0.00	0.00	0.00
	1.7		-0.00	0.00	0.00
	1.7		-0.00	0.00	0.00
	1.7		0.00	0.00	0.00

~~Three~~ Four reading taken just upstream of the culvert at the same location

Total Q = 0.00 cfs

2

Field Data Sheets – Basic RUAA Survey

(should be completed for each site)

Data Collectors & Contact Information:	D. Ramirez, P. Lokanath, C. Gauthier, L. Ray
Date & Time: 5-22-10 1141-1235	County Name: Wharton
Stream Name: Caney Creek above tidal	
Segment No. or nearest downstream Segment No.: 1305	
Description of Site: Hubenak Ln @ Caney Creek	

At any point during the Basic RUAA Survey it becomes apparent that primary contact recreation is clearly the use for the water body the investigator should stop conducting the UAA.

A. Stream Characteristics:

1. Check the following channel flow status that applies.

☐ dry ☐ no flow ☐ low ☒ normal ☐ high ☐ flooded

2. Check the following stream type that applies on the day of the survey:

☐ Ephemeral: A stream which flows only during or immediately after a rainfall event, and contains no refuge pools capable of sustaining a viable community of aquatic organisms.

☐ Intermittent: A stream which has a period of zero flow for at least one week during most years. Where flow records are available, a stream with a 7Q2 flow of less than 0.1 cubic feet per second is considered intermittent.

☐ Intermittent w/ perennial pools: An intermittent stream which maintains persistent pools even when flow in the stream is less than 0.1 cubic feet per second.

☒ Perennial: A stream which flows continuously throughout the year. Perennial streams have a 7Q2 equal to or greater than 0.1 cubic feet per second.

☐ Designated or unclassified tidal stream: A stream that is tidally influenced. If you checked this box, you will need to contact the Water Quality Standards Group and evaluate whether or not a bathing beach is located along the tidal stream and whether or not a bathing beach is located along the estuary, bay or Gulf water that the tidal stream flows into.

3. Streamflow

Use USGS gage data (if a gage is located at a site or within a quarter mile of a site) or use the Stream Flow (Discharge) Measurement Form and follow the procedures outlined in the most recent TCEQ Surface Water Quality Monitoring Procedures, Volume 1, RG-415. If USGS gage data is used for a site, include that information as an attachment and list the streamflow on the sampling date below. If the stream flow taken at one site is representative of the flow at another site(s), then that flow can be used as the observed flow and should be documented below. If the stream flow measured at one site is different from another site, then stream flow should be taken at both sites. ~~0.446~~ cfs ~~0.364~~ MES 0.07 velocity 2.85ft culvert width

0.429cfs

4. Water Quality Data (Field Parameters)

Field parameters should be collected in accordance with the procedures outlined in the most recent TCEQ Surface Water Quality Monitoring Procedures, Volume 1.

Air Temp 30 °C Water Temp 29 °C Secchi 0.64 m

5. Riparian Zone (Mark dominant categories with L (Left Bank) and R (Right Bank). Bank orientation is determined by the investigator facing downstream.)

____ Forest	____ Urban	____ Rip rap
____ Shrub dominated corridor	____ Pasture	____ Concrete
____ Herbaceous marsh	____ Row crops	Other (specify): Trees - R/L
R/L Mowed/maintained corridor	____ Denuded/Eroded bank	

6. Ease of bank access to the water body: ☒ Easy ☐ Moderately easy ☐ Moderately difficult ☐ Difficult

7. Please describe access opportunities or explain why the site is not easily accessible (Attach photos for documentation):

low bank, but runs through private property, logs in water no parking

8. Dominant Primary Substrate

☐ Cobble ☐ Sand ☐ Silt ☒ Mud/Clay ☐ Gravel ☐ Bedrock ☐ Rip rap ☐ Concrete

Q 50

Q 0.429 cfs

Field Data Sheets – Basic RUAA Survey

Stream Name Caney Creek above tidal Site: 2
Date: 5-22-10 Time: 1148 - 1233

B. Primary Contact Water Recreation Evaluation:
- Primary contact recreation draft definition: Water recreation activities, such as wading by children, swimming, water skiing, diving, tubing, surfing, and whitewater kayaking, canoeing, and rafting, involving a significant risk of ingestion of water.

1. Were water recreation activities that involve a significant risk of ingestion (full body immersion) observed at this site?
☐ Yes ☒ No primary contact recreation activities were observed
a. Check the following boxes of primary contact recreation activities observed at the time of the sampling event at the site (Attach photos of the activities or lack of activities).

☐ Wading-Children	☐ Tubing	☒ No primary contact activities that commonly occur were observed
☐ Wading-Adults	☐ Surfing	
☐ Swimming	☐ Whitewater-kayaking, canoeing, rafting	
☐ Water skiing	☐ Other: _____	
☐ Diving	☐ frequent public swimming-created by publicly owned land or commercial operations	

b. Check the number of individuals observed at the site: ~~☒~~ None ☑ 1-10 ☐ 11-20 ☐ 20-50 ☐ greater than 50 LK

c. Check the following that apply regarding the individuals proximity to the water body.
☐ Water in mouth or nose of the individual ☐ Primary touch: Individual's body (or portion) immersed in water
☐ Secondary touch: fishing, pets and related contact with water ☐ Individual is in a boat touching water
☒ Individual is on shore near water within 8 meters (25ft) of water ☐ Individual is well away from water between 8 and 30 meters (100 ft) ~~☐ Not applicable~~ LK

2. If primary contact recreation activities are not observed, describe the physical characteristics of the water body that may hinder the frequency of primary contact (depth, etc.) (Attach photos, etc. for documentation).
private property

3. Describe if there is public access (e.g. parks, roads, etc.) (Attach photos, maps, etc. for documentation).
road crosses stream

4. Is an area with primary contact recreation activities or a bathing beach (e.g. state/local parks with swimming, etc.) located near (e.g. within 5 miles upstream and downstream) this site? no

C. Secondary Contact Water Recreation Evaluation:
- Secondary contact recreation 1: Water recreation activities, such as fishing, commercial and recreational boating, and limited body contact incidental to shoreline activity, not involving a significant risk of water ingestion and that commonly occur.
- Secondary contact recreation 2: Water recreation activities, such as fishing, commercial and recreational boating, and limited body contact incidental to shoreline activity, not involving a significant risk of water ingestion but that occur less frequently than for secondary contact recreation 1 due to (1) physical characteristics of the water body and/or (2) limited public access.

1. Were water recreation activities observed at the site, but the nature of the recreation does not involve a significant risk of ingestion (e.g. secondary contact recreation activities)? ☐ Yes ☐ No secondary contact recreation activities were observed
a. Check the following boxes of secondary contact recreation activities that were observed at the time of the sampling event at the site (Attach photos of activities or lack of activities).
☐ Fishing
☐ Boating-commercial, recreational
☐ Non-whitewater-kayaking, rafting, canoeing
☒ No secondary contact recreation activities were observed
☐ Other secondary contact activities: _____

Field Data Sheets – Basic RUAA Survey

Stream Name Caney Creek above tidal Site: 2
Date: 5-22-10 Time: 1141-1233

b. Check the number of individuals observed at the site.
~~☐ None~~ ☒ 1-10 ☐ 11-20 ☐ 20-50 ☐ greater than 50
LR

c. Check the following that apply regarding the individuals proximity to the water body.
☐ Secondary touch: fishing, pets and related contact with water ☐ In a boat touching water
☒ Body on shore near water within 8 meters (25ft) of water ☐ Body well away from water between 8 and 30 meters (100 ft) N/A

2. If secondary contact recreation activities are not observed, describe the physical characteristics of the water body that may hinder the frequency of secondary contact (Attach photos, etc. for documentation).
see above

3. If secondary contact recreation activities are observed, how often do water recreational activities occur that do not involve a significant risk of water ingestion? ☐ frequently ☐ infrequently N/A
Please describe how often the activities occur? ☐ Unknown ☐ Never ☐ Daily ☐ Monthly ☐ Yearly

4. If infrequently, what is the reason? ☐ physical characteristics of the water body ☐ limited public access ☐ other
If other, list reasons: N/A

5. Describe the physical characteristics of the water body that hinders the frequency of secondary contact recreation (depth, etc.) (Attach photos or depth measurements, etc. for documentation).
see above

6. Describe why there is limited public access (e.g. lack of roads, river or stream banks overgrown, etc.) (Attach photos, maps, etc. for documentation).
private property

D. Noncontact Recreation Evaluation

Noncontact recreation applies to water bodies where recreation activities do not involve a significant risk of water ingestion, and where primary and secondary contact recreation uses do not occur because of unsafe conditions, such as barge traffic.

1. Provide site-specific information and documentation (including photographs) regarding unsafe conditions, recreation activities, and presence or absence of water recreation activities.
private property, log jams

Field Data Sheets – Basic RUAA Survey

Stream Name Caney Creek above tidal Site: 2
Date: 5-22-2010 FDS Page 3 of 8 Time: 1124 - 1233

E. Stream Channel and Substantial Pools
Please check the following which best describes the river or stream: X Wadeable ☐ Non-wadeable

1. Wadeable Streams
Determine whether or not the average depth at the thalweg is greater than 0.5 meters and if there are substantial pools with a depth of 1 meter or greater. Walk an approximately 300 meter reach (total) at the site and take the following measurements within the 300 meter reach. Measurements should be taken during base flow conditions (sustained or typical dry, warm-weather flows between rainfall events, excluding unusual antecedent conditions of drought or wet weather

Also, take photos facing upstream, downstream, left bank, and right bank at the 30 meters, 150 meters, and 300 meters.
Photos #s (30 meters) Upstream ✓ Downstream ✓ Left Bank ✓ Right Bank ✓
Photos #s (150 meters) Upstream ✓ Downstream ✓ Left Bank ✓ Right Bank —
taken @ 262m Photos #s (300 meters) Upstream ✓ Downstream ✓ Left Bank ✓ Right Bank —
2 upstreams taken + 2 left bank

a) Substantial pools - Measure the length of each pool (if > 10 pools only measure 10 pools), the width (at the widest point), and the deepest depth. A substantial pool is considered a pool greater than 10 meters in length for the purposes of a Basic RUAA Survey. If depth and/or width measurements were not attainable, explain why. N/a

	Length (meters)	Width (meters)	Depth (meters)
Pool 1			
Pool 2			
Pool 3			
Pool 4			
Pool 5			
Pool 6			
Pool 7			
Pool 8			
Pool 9			
Pool 10			

b)Average depth at the thalweg –Take depth measurements approximately every 30 meters to calculate an average depth at the thalweg (at least 10 measurements needed). If depth and/or width measurements were not attainable, explain why.

Distance	Depth (meters)	
30 meters	2.15ft	0.640
60 meters	1.85ft	0.548
90 meters	2.07ft	0.699
120 meters	2.95ft	0.899
150 meters	2.50	0.762
180 meters	2.75	0.838
210 meters	3.05	0.929
240 meters	3.0	0.914
270 meters at 262	> 4.1	1.250
300 meters		
Average		0.821

Field Data Sheets – Basic RUAA Survey

Stream Name Caney Creek above tidal Site: 2
Date: 5-22-10 Time: 1141 – 1233

c) Stream width - Measure (1) the width at one point which represents the typical average width of the 300 meter reach; (2) the width at the narrowest point of the stream within the 300 meter reach; and (3) the width at the widest point of the stream within the 300 meter reach.

Measurement Type	Width (meters)
Typical Average Width of 300 meter reach	32m 9.75m
Width at narrowest point of the stream within 300 meter reach	20m 6.09m
Width at the widest point of the stream within 300 meter reach	34m 10.36m

d) Is there sufficient water within a 300 meter stream reach during base flow conditions to support primary contact recreation? ☒ Yes ☐ No
COMMENTS:

2. Non-wadeable Streams N/a
If accessible, take 10 width measurements which represent typical widths of the 300 meter reach. If the water is too deep and not accessible record the estimated average width of the water body.

Also, take photos facing upstream, downstream, left bank, and right bank at .
Photos #s (30 meters) Upstream____ Downstream____ Left Bank ____ Right Bank____
Photos #s (150 meters) Upstream____ Downstream____ Left Bank ____ Right Bank____
Photos #s (300 meters) Upstream____ Downstream____ Left Bank ____ Right Bank____

# Measurements	Width (meters)
1	
2	
3	
4	
5	
6	
7	
8	
9	
10	

Field Data Sheets – Basic RUAA Survey

Stream Name Caney Creek above tidal Site: 2
Date: 5-22-10 Time: 1141 - 1233

F. Additional RUAA Information

1. Check the following activities observed over the site reach.

- ☐ Drinking or water in mouth
- ☐ Bathing
- ☐ Walking
- ☐ Jogging/running
- ☐ Bicycling
- ☒ Standing
- ☐ Sitting
- ☐ Lying down/sleeping
- ☐ Playing on shoreline
- ☐ Picnicking
- ☐ Motorcycle/ATV
- ☐ Hunting/Trapping
- ☐ Wildlife watching
- ☒ None
- ☐ Other: _____

2. Are there permanent or long-term hydrologic modifications that are constructed and operated in a way that affects the recreational uses? ☒ Yes ☐ No (If yes, please provide supporting documentation and photos.)
Comments: road crosses w/ culverts

3. Check any channel obstructions that apply (Attach photos).

- ☒ Culverts
- ☒ Barbed wire
- ☐ Utility pipe
- ☒ Fences
- ☐ Dams
- ☐ Other (specify): _____
- ☒ Log jams
- ☐ Thick vegetation
- ☐ Rip rap
- ☐ Low bridges
- ☐ Water control structure
- ☐ None

4. Check all surrounding conditions that promote recreational activities (Attach photos of evidence or unusual items of interest).

- ☐ Campgrounds
- ☐ Playgrounds
- ☐ Rural area
- ☒ Residential
- ☐ National forests
- ☐ Urban/suburban location
- ☐ Golf Course
- ☐ Sports Field
- ☐ Stairs/walkway
- ☐ Boating access (ramps)
- ☐ Beach
- ☒ Bridge crossing
- ☐ Commercial boating
- ☐ Trails/paths (hiking/biking)
- ☐ Paved parking lot
- ☐ Unimproved parking lot
- ☒ Roads (paved/unpaved)
- ☒ Populated area
- ☐ Docks or rafts
- ☐ Commercial outfitter
- ☐ Nearby school
- ☐ Power Line Corridor
- ☐ Parks (national/city/county/state)
- ☐ Public Property
- ☐ Other: _____
- ☐ None of the Above

Comments: _____

5. Check all surrounding conditions that impede recreational activities (Attach photos of evidence or unusual items of interest).

- ☒ Private Property
- ☐ No trespass sign
- ☐ Wildlife
- ☐ Steep slopes
- ☐ No public access
- ☐ No roads
- ☒ Fence
- ☐ Barge/ship traffic
- ☐ Industrial
- ☐ None of the Above
- ☐ Other: _____

Comments: _____

6. Check any indications of human use (Attach photos).

- ☒ Roads
- ☐ Rope swings
- ☐ Dock/platform
- ☐ Foot paths/prints
- ☐ Other: _____
- ☐ RV/ATV Tracks
- ☐ Camping Sites
- ☒ Fire pit/ring
- ☐ Fishing Tackle
- ☐ NPDES Discharge
- ☐ Gates on corridor
- ☒ Children's toys
- ☒ Remnant's of Kid's play
- ☐ Organized event
- ☐ No Human Presence

Comments: _____

Field Data Sheets – Basic RUAA Survey

Stream Name Caney Creek above tidal Site: 2
Date: 5-22-10 Time: 1141 - 1233

7. Check all water characteristics that apply (Attach photos).
Aquatic Vegetation: ☐ absent ☐ rare ☒ common ☒ abundant
Algae Cover: ☐ absent ☒ rare ☐ common ☐ abundant
Odor: ☒ none ☐ rare ☐ common ☐ abundant
Color: ☐ clear ☐ green ☐ red ☒ brown ☐ black
Bottom Deposit: ☐ sludge ☐ solids ☒ fine sediments ☐ none ☐ other
Water Surface: ☐ clear ☒ scum ☐ foam ☐ debris ☐ oil
Other:
water hyacinth, esp upstream

8. Vertebrates Observed within 300 meter reach

Snakes	☒ None	☐ slight presence	☐ moderate presence	☐ large presence
Water Dependent Birds	☐ None	☒ slight presence	☒ moderate presence	☐ large presence
Alligators	☒ None	☐ slight presence	☐ moderate presence	☐ large presence

(4 adults + 4 babies (ducks))

Comments: Frog

9. Mammals Observed within 300 meter reach

Wild	☒ None	☐ slight presence	☐ moderate presence	☐ large presence
Domesticated Pets	☐ None	☒ slight presence	☐ moderate presence	☐ large presence
Livestock	☒ None	☐ slight presence	☐ moderate presence	☐ large presence
Feral Hogs	☒ None	☐ slight presence	☐ moderate presence	☐ large presence

(2 dogs)

Comments:

10. Evidence of wild animals or evidence of birds, cattle, hogs, etc.
☒ Tracks ☐ Fecal droppings ☐ Bird nests N/A
possibly dog

11. Garbage Observed

Large garbage in the channel	☒ None	☐ Rare	☐ Common	☐ Abundant
Small garbage in the channel	☒ None	☐ Rare	☐ Common	☐ Abundant
Bank Garbage	☒ None	☐ Rare	☐ Common	☐ Abundant

Briefly describe the kinds of garbage observed:

12. Is the site located in a wildlife preserve with large wildlife (i.e waterfowl) population? ☐ Yes ☒ No

13. Please document any other relevant information regarding recreational activities and the water body in general (for example, area outside of the stream reach evaluated).
n/a

Field Data Sheet - Basic RUAA Survey
Stream Flow (Discharge) Measurement

Stream: Caney Creek above tidal Date: 5-22-10
Site: 2 Site
Description: Hubenak Ln @ Caney Creek
Time Begin: 1141 Time End: 1143 Meter Type: Sontek Flowtracker
Observers: D. Ramirez & P. Lokanath Stream Width*: 2.85 ft Section Width (W):
Observations: 1 velocity taken at culvert (2.85 ft is culvert width)

Section Midpoint (ft) (m)	Section Depth (ft) (m) (cm) (D)	Observational Depth** (ft) (m)	Velocity (V) At Point (ft/s) (m/s)	Velocity (V) Average (ft/s) (m/s)	Flow (Q) (m^3/s) (ft^3/s) Q = (W)(D)(V)
mid culvert	1.65	1.65 ft	0.07	0.07	* 0.429

*Total Q = 0.429 cfs

*see following page for calculations.

Flow calculations for Caney Creek FS1-2

*Used TI-89 graphing calculator

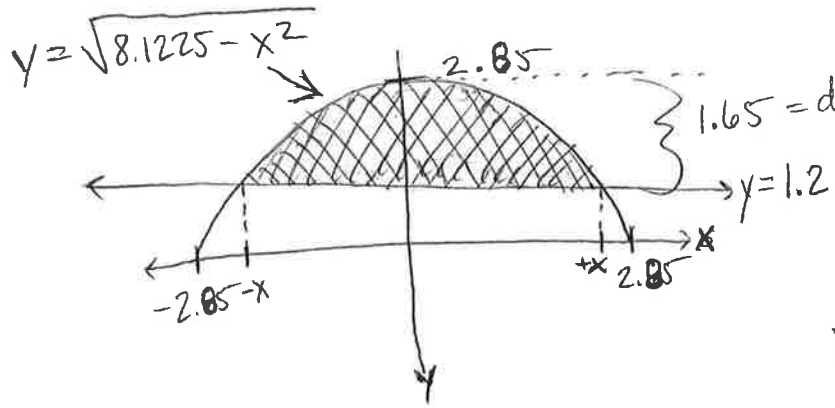

$x \rightarrow 1.2 = \sqrt{8.1225 - x^2} \rightarrow$

$x = \pm 2.58505$

Area of water = shaded area →
(area underneath circle from -x to x) −
(area underneath line from -x to x)

Area of water = (12.3308) − (6.20412) = $\boxed{6.12668 \text{ ft}^2}$

(Areas calculated using the $\int f(x)\,dx$ function on the graphing screen)

Total Q = Area · V $V = 0.07 \text{ ft/s}$ $A = 6.13 \text{ ft}^2$

Total Q = $(0.07 \text{ ft/s})(6.13 \text{ ft}^2)$ = $\boxed{0.429 \text{ cfs}}$

3

Field Data Sheets – Basic RUAA Survey

(should be completed for each site)

Data Collectors & Contact Information: L. Ray, C. Gauthier, P. Lockwith, P. Ramirez	
Date & Time: 05/22/10 13:39-15:09	County Name: Wharton
Stream Name: Caney Creek above tidal	
Segment No. or nearest downstream Segment No.: 1305	
Description of Site: May Rd and Brod Rd @ Caney Creek	

At any point during the Basic RUAA Survey it becomes apparent that primary contact recreation is clearly the use for the water body the investigator should stop conducting the UAA.

A. Stream Characteristics:

1. Check the following channel flow status that applies.

☐ dry ☐ no flow ☐ low ☒ normal ☐ high ☐ flooded

2. Check the following stream type that applies on the day of the survey:

☐ Ephemeral: A stream which flows only during or immediately after a rainfall event, and contains no refuge pools capable of sustaining a viable community of aquatic organisms.

☐ Intermittent: A stream which has a period of zero flow for at least one week during most years. Where flow records are available, a stream with a 7Q2 flow of less than 0.1 cubic feet per second is considered intermittent.

☐ Intermittent w/ perennial pools: An intermittent stream which maintains persistent pools even when flow in the stream is less than 0.1 cubic feet per second.

☒ Perennial: A stream which flows continuously throughout the year. Perennial streams have a 7Q2 equal to or greater than 0.1 cubic feet per second.

☐ Designated or unclassified tidal stream: A stream that is tidally influenced. If you checked this box, you will need to contact the Water Quality Standards Group and evaluate whether or not a bathing beach is located along the tidal stream and whether or not a bathing beach is located along the estuary, bay or Gulf water that the tidal stream flows into.

3. Streamflow

Use USGS gage data (if a gage is located at a site or within a quarter mile of a site) or use the Stream Flow (Discharge) Measurement Form and follow the procedures outlined in the most recent TCEQ Surface Water Quality Monitoring Procedures, Volume 1, RG-415. If USGS gage data is used for a site, include that information as an attachment and list the streamflow on the sampling date below. If the stream flow taken at one site is representative of the flow at another site(s), then that flow can be used as the observed flow and should be documented below. If the stream flow measured at one site is different from another site, then stream flow should be taken at both sites. 0.014 cfs

4. Water Quality Data (Field Parameters)

Field parameters should be collected in accordance with the procedures outlined in the most recent TCEQ Surface Water Quality Monitoring Procedures, Volume 1.

Air Temp 31 °C Water Temp 31 °C Secchi 0.48 m

5. Riparian Zone (Mark dominant categories with L (Left Bank) and R (Right Bank). Bank orientation is determined by the investigator facing downstream.)

____ Forest	____ Urban	____ Rip rap
____ Shrub dominated corridor	____ Pasture	____ Concrete
____ Herbaceous marsh	____ Row crops	Other (specify): ____
L,R Mowed/maintained corridor	____ Denuded/Eroded bank	

6. Ease of bank access to the water body: ☒ Easy ☐ Moderately easy ☐ Moderately difficult ☐ Difficult

7. Please describe access opportunities or explain why the site is not easily accessible (Attach photos for documentation):

park on side of road, walk in - gentle slope
Private

8. Dominant Primary Substrate

☐ Cobble ☐ Sand ☒ Silt ☐ Mud/Clay ☐ Gravel ☐ Bedrock ☐ Rip rap ☐ Concrete

(1) SD

Q EPL

Field Data Sheets – Basic RUAA Survey

Stream Name Caney Creek above tidal Site: 3
Date: 5-22-10 Time: 1339-1507

B. Primary Contact Water Recreation Evaluation:
- Primary contact recreation draft definition: Water recreation activities, such as wading by children, swimming, water skiing, diving, tubing, surfing, and whitewater kayaking, canoeing, and rafting, involving a significant risk of ingestion of water.

1. Were water recreation activities that involve a significant risk of ingestion (full body immersion) observed at this site?
☐ Yes ☒ No primary contact recreation activities were observed
a. Check the following boxes of primary contact recreation activities observed at the time of the sampling event at the site (Attach photos of the activities or lack of activities).

☐ Wading-Children	☐ Tubing	☒ No primary contact activities that commonly occur were observed
☐ Wading-Adults	☐ Surfing	
☐ Swimming	☐ Whitewater-kayaking, canoeing, rafting	
☐ Water skiing	☐ Other: _____	
☐ Diving	☐ frequent public swimming-created by publicly owned land or commercial operations	

b. Check the number of individuals observed at the site: ☐ None ☒ 1-10 ☐ 11-20 ☐ 20-50 ☐ greater than 50

c. Check the following that apply regarding the individuals proximity to the water body.
☐ Water in mouth or nose of the individual ☐ Primary touch: Individual's body (or portion) immersed in water
☐ Secondary touch: fishing, pets and related contact with water ☐ Individual is in a boat touching water
☒ Individual is on shore near water within 8 meters (25ft) of water ☒ Individual is well away from water between 8 and 30 meters (100 ft) ☐ Not applicable

2. If primary contact recreation activities are not observed, describe the physical characteristics of the water body that may hinder the frequency of primary contact (depth, etc.) (Attach photos, etc. for documentation).
Water is shallow, water flows through private yard.

3. Describe if there is public access (e.g. parks, roads, etc.) (Attach photos, maps, etc. for documentation).
Bridge crossing.

4. Is an area with primary contact recreation activities or a bathing beach (e.g. state/local parks with swimming, etc.) located near (e.g. within 5 miles upstream and downstream) this site? ~~N/A~~ no

C. Secondary Contact Water Recreation Evaluation:
- Secondary contact recreation 1: Water recreation activities, such as fishing, commercial and recreational boating, and limited body contact incidental to shoreline activity, not involving a significant risk of water ingestion and that commonly occur.
- Secondary contact recreation 2: Water recreation activities, such as fishing, commercial and recreational boating, and limited body contact incidental to shoreline activity, not involving a significant risk of water ingestion but that occur less frequently than for secondary contact recreation 1 due to (1) physical characteristics of the water body and/or (2) limited public access.

1. Were water recreation activities observed at the site, but the nature of the recreation does not involve a significant risk of ingestion (e.g. secondary contact recreation activities)? ☐ Yes ☒ No secondary contact recreation activities were observed
a. Check the following boxes of secondary contact recreation activities that were observed at the time of the sampling event at the site (Attach photos of activities or lack of activities).
☐ Fishing
☐ Boating-commercial, recreational
☐ Non-whitewater-kayaking, rafting, canoeing
☒ No secondary contact recreation activities were observed
☐ Other secondary contact activities: _____

Field Data Sheets – Basic RUAA Survey

Stream Name Caney Creek above tidal Site: 3
Date: 5-22-10 Time: 1339-1507

b. Check the number of individuals observed at the site.
☐ None ☒ 1-10 ☐ 11-20 ☐ 20-50 ☐ greater than 50

c. Check the following that apply regarding the individuals proximity to the water body.
☐ Secondary touch: fishing, pets and related contact with water ☐ In a boat touching water
☒ Body on shore near water within 8 meters (25ft) of water ☒ Body well away from water between 8 and 30 meters (100 ft)

2. If secondary contact recreation activities are not observed, describe the physical characteristics of the water body that may hinder the frequency of secondary contact (Attach photos, etc. for documentation).
Same as before

3. If secondary contact recreation activities are observed, how often do water recreational activities occur that do not involve a significant risk of water ingestion? ☐ frequently ☐ infrequently N/A
Please describe how often the activities occur? ☒ Unknown ☐ Never ☐ Daily ☐ Monthly ☐ Yearly

4. If infrequently, what is the reason? ☐ physical characteristics of the water body ☐ limited public access ☐ other
If other, list reasons: N/A

5. Describe the physical characteristics of the water body that hinders the frequency of secondary contact recreation (depth, etc.) (Attach photos or depth measurements, etc. for documentation).
Same as before water

6. Describe why there is limited public access (e.g. lack of roads, river or stream banks overgrown, etc.) (Attach photos, maps, etc. for documentation).
the water mostly runs through private yard.

D. Noncontact Recreation Evaluation N/A

Noncontact recreation applies to water bodies where recreation activities do not involve a significant risk of water ingestion, and where primary and secondary contact recreation uses do not occur because of unsafe conditions, such as barge traffic.

1. Provide site-specific information and documentation (including photographs) regarding unsafe conditions, recreation activities, and presence or absence of water recreation activities.

Field Data Sheets – Basic RUAA Survey

Stream Name Caney Creek above tidal Site: 3
Date: 5-22-2010 FDS Page 3 of 8 Time: 1339-1507

E. Stream Channel and Substantial Pools
Please check the following which best describes the river or stream: ☒ Wadeable ☐ Non-wadeable

1. Wadeable Streams
Determine whether or not the average depth at the thalweg is greater than 0.5 meters and if there are substantial pools with a depth of 1 meter or greater. Walk an approximately 300 meter reach (total) at the site and take the following measurements within the 300 meter reach. Measurements should be taken during base flow conditions (sustained or typical dry, warm-weather flows between rainfall events, excluding unusual antecedent conditions of drought or wet weather

Also, take photos facing upstream, downstream, left bank, and right bank at the 30 meters, 150 meters, and 300 meters.
Photos #s (30 meters) Upstream ✓ Downstream ✓ Left Bank ✓ Right Bank ✓
Photos #s (150 meters) Upstream ✓ Downstream ✓ Left Bank ✓ Right Bank ✓
Photos #s (300 meters) Upstream ✓ Downstream ✓ Left Bank ✓ Right Bank ✓

a) Substantial pools - Measure the length of each pool (if > 10 pools only measure 10 pools), the width (at the widest point), and the deepest depth. A substantial pool is considered a pool greater than 10 meters in length for the purposes of a Basic RUAA Survey. If depth and/or width measurements were not attainable, explain why.

	Length (meters)	Width (meters)	Depth (meters)
Pool 1			
Pool 2			
Pool 3			
Pool 4			
Pool 5			
Pool 6			
Pool 7			
Pool 8			
Pool 9			
Pool 10			

b)Average depth at the thalweg –Take depth measurements approximately every 30 meters to calculate an average depth at the thalweg (at least 10 measurements needed). If depth and/or width measurements were not attainable, explain why.

Distance	Depth (meters)
30 meters	0.085m 0.28
60 meters	0.09m 0.30
90 meters	0.146m ~~0.44~~ PL 0.48
120 meters	0.158m 0.52
150 meters	0.829m 2.7 — at the culvert
180 meters	0.268m 0.88
210 meters	0.274m 0.90
240 meters	0.402m 1.32
270 meters	0.438m 1.44
300 meters	0.392m 1.30
Average	0.308m

Field Data Sheets – Basic RUAA Survey

Stream Name Caney Creek above tidal Site: 3
Date: 5-22-2010 Time: 1339-1507

c) Stream width - Measure (1) the width at one point which represents the typical average width of the 300 meter reach; (2) the width at the narrowest point of the stream within the 300 meter reach; and (3) the width at the widest point of the stream within the 300 meter reach.

Measurement Type	Width (meters)
Typical Average Width of 300 meter reach	30.1 ft 9.17m
Width at narrowest point of the stream within 300 meter reach	28.4 ft 8.65m
Width at the widest point of the stream within 300 meter reach	65.7 ft 20.02m

d) Is there sufficient water within a 300 meter stream reach during base flow conditions to support primary contact recreation? ☑ Yes ☐ No
COMMENTS:

2. Non-wadeable Streams
If accessible, take 10 width measurements which represent typical widths of the 300 meter reach. If the water is too deep and not accessible record the estimated average width of the water body.

Also, take photos facing upstream, downstream, left bank, and right bank at .
Photos #s (30 meters) Upstream____ Downstream____ Left Bank ____ Right Bank____
Photos #s (150 meters) Upstream____ Downstream____ Left Bank ____ Right Bank____
Photos #s (300 meters) Upstream____ Downstream____ Left Bank ____ Right Bank____

# Measurements	Width (meters)
1	
2	
3	
4	
5	
6	
7	
8	
9	
10	

Field Data Sheets – Basic RUAA Survey

Stream Name Caney Creek above tidal Site: 3
Date: 5-22-2010 Time: 1339-1507

F. Additional RUAA Information

1. Check the following activities observed over the site reach.

- ☐ Drinking or water in mouth
- ☐ Bathing
- ☒ Walking
- ☐ Jogging/running
- ☐ Bicycling
- ☒ Standing
- ☐ Sitting
- ☐ Lying down/sleeping
- ☐ Playing on shoreline
- ☐ Picnicking
- ☐ Motorcycle/ATV
- ☐ Hunting/Trapping
- ☐ Wildlife watching
- ☐ None
- ☐ Other: _____

2. Are there permanent or long-term hydrologic modifications that are constructed and operated in a way that affects the recreational uses? ☒ Yes ☐ No (If yes, please provide supporting documentation and photos.)
Comments: culvert

3. Check any channel obstructions that apply (Attach photos).

- ☒ Culverts
- ☐ Barbed wire
- ☐ Utility pipe
- ☐ Fences
- ☐ Dams
- ☐ Other (specify): _____
- ☐ Log jams
- ☐ Thick vegetation
- ☐ Rip rap
- ☐ Low bridges
- ☐ Water control structure
- ☐ None

4. Check all surrounding conditions that promote recreational activities (Attach photos of evidence or unusual items of interest).

- ☐ Campgrounds
- ☐ Playgrounds
- ☐ Rural area
- ☒ Residential
- ☐ National forests
- ☐ Urban/suburban location
- ☐ Golf Course
- ☐ Sports Field
- ☐ Stairs/walkway
- ☐ Boating access (ramps)
- ☐ Beach
- ☒ Bridge crossing
- ☐ Commercial boating
- ☐ Trails/paths (hiking/biking)
- ☐ Paved parking lot
- ☐ Unimproved parking lot
- ☒ Roads (paved/unpaved)
- ☐ Populated area
- ☐ Docks or rafts
- ☐ Commercial outfitter
- ☐ Nearby school
- ☐ Power Line Corridor
- ☐ Parks (national/city/county/state)
- ☐ Public Property
- ☐ Other: _____
- ☐ None of the Above

Comments: _____

5. Check all surrounding conditions that impede recreational activities (Attach photos of evidence or unusual items of interest).

- ☒ Private Property
- ☐ No trespass sign
- ☐ Wildlife
- ☐ Steep slopes
- ☐ No public access
- ☐ No roads
- ☐ Fence
- ☐ Barge/ship traffic
- ☐ Industrial
- ☐ None of the Above
- ☐ Other: _____

Comments: _____

6. Check any indications of human use (Attach photos).

- ☒ Roads
- ☐ Rope swings
- ☐ Dock/platform
- ☐ Foot paths/prints
- ☐ Other: _____
- ☐ RV/ATV Tracks
- ☐ Camping Sites
- ☐ Fire pit/ring
- ☐ Fishing Tackle
- ☐ NPDES Discharge
- ☐ Gates on corridor
- ☐ Children's toys
- ☐ Remnant's of Kid's play
- ☐ Organized event
- ☐ No Human Presence

Comments: Tire swing on the bank.

Field Data Sheets – Basic RUAA Survey

Stream Name Caney Creek above tidal Site: 3
Date: 5-22-2010 Time: 1339-1507

7. Check all water characteristics that apply (Attach photos).
Aquatic Vegetation: ☐ absent ☐ rare ☒ common ☐ abundant
Algae Cover: ☒ absent ☐ rare ☐ common ☐ abundant
Odor: ☒ none ☐ rare ☐ common ☐ abundant
Color: ☐ clear ☐ green ☐ red ☒ brown ☐ black
Bottom Deposit: ☐ sludge ☐ solids ☒ fine sediments ☐ none ☐ other
Water Surface: ☒ clear ☐ scum ☐ foam ☐ debris ☐ oil
Other:

8. Vertebrates Observed within 300 meter reach

Snakes	☐ None	☒ slight presence	☐ moderate presence	☐ large presence
Water Dependent Birds	☐ None	☒ slight presence	☐ moderate presence	☐ large presence
Alligators	☒ None	☐ slight presence	☐ moderate presence	☐ large presence

Comments: 1 snake on the bank

9. Mammals Observed within 300 meter reach

Wild	☒ None	☐ slight presence	☐ moderate presence	☐ large presence
Domesticated Pets	☐ None	☒ slight presence	☐ moderate presence	☐ large presence
Livestock	☒ None	☒ slight presence	☐ moderate presence	☐ large presence
Feral Hogs	☒ None	☐ slight presence	☐ moderate presence	☐ large presence

Comments: 1 horse.

10. Evidence of wild animals or evidence of birds, cattle, hogs, etc.
☐ Tracks ☐ Fecal droppings ☒ Bird nests in the tree

11. Garbage Observed

Large garbage in the channel	☒ None	☐ Rare	☐ Common	☐ Abundant
Small garbage in the channel	☒ None	☐ Rare	☐ Common	☐ Abundant
Bank Garbage	☐ None	☒ Rare	☐ Common	☐ Abundant

Briefly describe the kinds of garbage observed: plastic bottles.

12. Is the site located in a wildlife preserve with large wildlife (i.e waterfowl) population? ☐ Yes ☒ No

13. Please document any other relevant information regarding recreational activities and the water body in general (for example, area outside of the stream reach evaluated).
Observed dog in water, water is really shallow on the upstream of the bridge the downstream is fenced off about 30m after 300m mark.

Field Data Sheet - Basic RUAA Survey
Stream Flow (Discharge) Measurement

Stream: Caney Creek above tidal Date: 5-22-10
Site: 3 Site
Description: May Rd and Brod Rd @ Caney Creek
Time Begin: 14:40 Time End: 15:00 Meter Type: Sontek Flowtracker
Observers: D. Ramirez & C. Gauthier Stream Width*: 30.1' Section Width (W): 1.505
Observations:

Section Midpoint (ft)(m)	Section Depth (ft)(m)(cm) (D)	Observational Depth** (ft)(m)	Velocity (V) At Point (ft/s)(m/s)	Velocity (V) Average (ft/s)(m/s)	Flow (Q) (m^3/s)(ft^3/s) Q = (W)(D)(V)
0.75	0.86 LR 5/22/10			0.00	0.000
2.25	1.3			-0.02	-0.039
3.75	1.5			-0.01	-0.023
5.25	1.8			-0.01	-0.027
6.75	2.0			-0.00	0.000
8.25	2.0			0.01	0.030
9.75	2.0			0.01	0.030
11.25	1.9			0.01	0.029
12.75	1.8			-0.01	-0.027
14.25	1.9			-0.01	-0.029
15.75	2.05			0.01	0.031
17.25	2.0			-0.01	-0.030
18.75	1.9			0.01	0.029
20.25	1.8			0.00	0.000
21.75	1.6			0.01	0.024
23.25	1.4			0.00	0.000
24.75	1.2			-0.00	0.000
26.25	1.0			0.02	0.030
27.75	0.9			-0.01	-0.014
29.25	0.5		* -0.00	-0.00	0.000

* wind blowing up stream
* vegetation thick

Total Q ~~0.002~~ KC 10/28/10 Verify Q

Total Q = 0.014 cfs

4

Field Data Sheets – Basic RUAA Survey

(should be completed for each site)

Data Collectors & Contact Information: O. Ramirez, L. Ray, P. Lokanath, C. Gauthier	
Date & Time: 5-22-10 10:24AM-1058	County Name: Wharton
Stream Name: Caney Creek above tidal	
Segment No. or nearest downstream Segment No.: 1305	
Description of Site: May Rd and CR 109 @ Caney Creek	

At any point during the Basic RUAA Survey it becomes apparent that primary contact recreation is clearly the use for the water body the investigator should stop conducting the UAA.

A. Stream Characteristics:

1. Check the following channel flow status that applies.
☐ dry ☐ no flow ☐ low ☒ normal ☐ high ☐ flooded

2. Check the following stream type that applies on the day of the survey:
Ephemeral: A stream which flows only during or immediately after a rainfall event, and contains no refuge pools capable of sustaining a viable community of aquatic organisms.
☐ Intermittent: A stream which has a period of zero flow for at least one week during most years. Where flow records are available, a stream with a 7Q2 flow of less than 0.1 cubic feet per second is considered intermittent.
☒ Intermittent w/ perennial pools: An intermittent stream which maintains persistent pools even when flow in the stream is less than 0.1 cubic feet per second.
☐ Perennial: A stream which flows continuously throughout the year. Perennial streams have a 7Q2 equal to or greater than 0.1 cubic feet per second.
☐ Designated or unclassified tidal stream: A stream that is tidally influenced. If you checked this box, you will need to contact the Water Quality Standards Group and evaluate whether or not a bathing beach is located along the tidal stream and whether or not a bathing beach is located along the estuary, bay or Gulf water that the tidal stream flows into.

3. Streamflow
velocity only taken
Use USGS gage data (if a gage is located at a site or within a quarter mile of a site) or use the Stream Flow (Discharge) Measurement Form and follow the procedures outlined in the most recent TCEQ Surface Water Quality Monitoring Procedures, Volume 1, RG-415. If USGS gage data is used for a site, include that information as an attachment and list the streamflow on the sampling date below. If the stream flow taken at one site is representative of the flow at another site(s), then that flow can be used as the observed flow and should be documented below. If the stream flow measured at one site is different from another site, then stream flow should be taken at both sites. 6.00 cfs

4. Water Quality Data (Field Parameters)
Field parameters should be collected in accordance with the procedures outlined in the most recent TCEQ Surface Water Quality Monitoring Procedures, Volume 1.
Air Temp 29 °C Water Temp 27 °C Secchi .492 m
very brown color

5. Riparian Zone (Mark dominant categories with L (Left Bank) and R (Right Bank). Bank orientation is determined by the investigator facing downstream.)

___	Forest	___	Urban	___	Rip rap
L,R	Shrub dominated corridor	___	Pasture	___	Concrete
___	Herbaceous marsh	L,R	Row crops	Other (specify):	___
___	Mowed/maintained corridor	___	Denuded/Eroded bank		

6. Ease of bank access to the water body: ☒ Easy ☐ Moderately easy ☐ Moderately difficult ☐ Difficult

7. Please describe access opportunities or explain why the site is not easily accessible (Attach photos for documentation):
Park on side of road & walk into stream, thick veg.

8. Dominant Primary Substrate
☐Cobble ☐Sand ☐Silt ☒Mud/Clay ☐Gravel ☐Bedrock ☐Rip rap ☐ Concrete

Q SP

SEE Q SP

Field Data Sheets – Basic RUAA Survey

Stream Name Caney Creek above tidal Site: 4
Date: 5/22/10 Time: 1024-1058

B. Primary Contact Water Recreation Evaluation:
- Primary contact recreation draft definition: Water recreation activities, such as wading by children, swimming, water skiing, diving, tubing, surfing, and whitewater kayaking, canoeing, and rafting, involving a significant risk of ingestion of water.

1. Were water recreation activities that involve a significant risk of ingestion (full body immersion) observed at this site?
☐ Yes ☒ No primary contact recreation activities were observed
a. Check the following boxes of primary contact recreation activities observed at the time of the sampling event at the site (Attach photos of the activities or lack of activities).

☐ Wading-Children ☐ Tubing ☒ No primary contact activities that commonly occur were observed
☐ Wading-Adults ☐ Surfing
☐ Swimming ☐ Whitewater-kayaking, canoeing, rafting
☐ Water skiing ☐ Other: _____
☐ Diving ☐ frequent public swimming-created by publicly owned land or commercial operations

b. Check the number of individuals observed at the site: ☒ None ☐ 1-10 ☐ 11-20 ☐ 20-50 ☐ greater than 50

c. Check the following that apply regarding the individuals proximity to the water body.
☐ Water in mouth or nose of the individual ☐ Primary touch: Individual's body (or portion) immersed in water
☐ Secondary touch: fishing, pets and related contact with water ☐ Individual is in a boat touching water
☐ Individual is on shore near water within 8 meters (25ft) of water ☐ Individual is well away from water between 8 and 30 meters (100 ft) ☒ Not applicable

2. If primary contact recreation activities are not observed, describe the physical characteristics of the water body that may hinder the frequency of primary contact (depth, etc.) (Attach photos, etc. for documentation).
Thick vegetation, fence across on downstream, narrow channel, no flow

3. Describe if there is public access (e.g. parks, roads, etc.) (Attach photos, maps, etc. for documentation).
Road

4. Is an area with primary contact recreation activities or a bathing beach (e.g. state/local parks with swimming, etc.) located near (e.g. within 5 miles upstream and downstream) this site? N/A no

C. Secondary Contact Water Recreation Evaluation:
- Secondary contact recreation 1: Water recreation activities, such as fishing, commercial and recreational boating, and limited body contact incidental to shoreline activity, not involving a significant risk of water ingestion and that commonly occur.
- Secondary contact recreation 2: Water recreation activities, such as fishing, commercial and recreational boating, and limited body contact incidental to shoreline activity, not involving a significant risk of water ingestion but that occur less frequently than for secondary contact recreation 1 due to (1) physical characteristics of the water body and/or (2) limited public access.

1. Were water recreation activities observed at the site, but the nature of the recreation does not involve a significant risk of ingestion (e.g. secondary contact recreation activities)? ☐ Yes ☒ No secondary contact recreation activities were observed
a. Check the following boxes of secondary contact recreation activities that were observed at the time of the sampling event at the site (Attach photos of activities or lack of activities).
☐ Fishing
☐ Boating-commercial, recreational
☐ Non-whitewater-kayaking, rafting, canoeing
☒ No secondary contact recreation activities were observed
☐ Other secondary contact activities: _____

Field Data Sheets – Basic RUAA Survey

Stream Name Caney Creek above tidal Site: 4
Date: 5-22-10 Time: 10:24-1058

b. Check the number of individuals observed at the site.
X None ☐ 1-10 ☐ 11-20 ☐ 20-50 ☐ greater than 50

c. Check the following that apply regarding the individuals proximity to the water body.
☐ Secondary touch: fishing, pets and related contact with water ☐ In a boat touching water
☐ Body on shore near water within 8 meters (25ft) of water ☐ Body well away from water between 8 and 30 meters (100 ft) N/A

2. If secondary contact recreation activities are not observed, describe the physical characteristics of the water body that may hinder the frequency of secondary contact (Attach photos, etc. for documentation).
Same

3. If secondary contact recreation activities are observed, how often do water recreational activities occur that do not involve a significant risk of water ingestion? ☐ frequently ☐ infrequently N/A
Please describe how often the activities occur? X Unknown ☐ Never ☐ Daily ☐ Monthly ☐ Yearly

4. If infrequently, what is the reason? ☐ physical characteristics of the water body ☐ limited public access ☐ other
If other, list reasons: N/A

5. Describe the physical characteristics of the water body that hinders the frequency of secondary contact recreation (depth, etc.) (Attach photos or depth measurements, etc. for documentation).
Same

6. Describe why there is limited public access (e.g. lack of roads, river or stream banks overgrown, etc.) (Attach photos, maps, etc. for documentation).
Same

D. Noncontact Recreation Evaluation
Noncontact recreation applies to water bodies where recreation activities do not involve a significant risk of water ingestion, and where primary and secondary contact recreation uses do not occur because of unsafe conditions, such as barge traffic.

1. Provide site-specific information and documentation (including photographs) regarding unsafe conditions, recreation activities, and presence or absence of water recreation activities.

N/A

Field Data Sheets – Basic RUAA Survey

Stream Name Caney Creek above tidal Site: 4
Date: 5-22-10 FDS Page 3 of 8 Time: 1024-1058

E. Stream Channel and Substantial Pools
Please check the following which best describes the river or stream: X Wadeable X Non-wadeable

1. Wadeable Streams
Determine whether or not the average depth at the thalweg is greater than 0.5 meters and if there are substantial pools with a depth of 1 meter or greater. Walk an approximately 300 meter reach (total) at the site and take the following measurements within the 300 meter reach. Measurements should be taken during base flow conditions (sustained or typical dry, warm-weather flows between rainfall events, excluding unusual antecedent conditions of drought or wet weather

Also, take photos facing upstream, downstream, left bank, and right bank at the 30 meters, 150 meters, and 300 meters.
Photos #s (30 meters) Upstream____ Downstream____ Left Bank ____ Right Bank____
Photos #s (150 meters) Upstream____ Downstream____ Left Bank ____ Right Bank____
Photos #s (300 meters) Upstream____ Downstream____ Left Bank ____ Right Bank____

a) Substantial pools - Measure the length of each pool (if > 10 pools only measure 10 pools), the width (at the widest point), and the deepest depth. A substantial pool is considered a pool greater than 10 meters in length for the purposes of a Basic RUAA Survey. If depth and/or width measurements were not attainable, explain why.

	Length (meters)	Width (meters)	Depth (meters)
Pool 1			
Pool 2			
Pool 3			
Pool 4			
Pool 5			
Pool 6			
Pool 7			
Pool 8			
Pool 9			
Pool 10			

b)Average depth at the thalweg –Take depth measurements approximately every 30 meters to calculate an average depth at the thalweg (at least 10 measurements needed). If depth and/or width measurements were not attainable, explain why.

Distance	Depth (meters)
30 meters	
60 meters	
90 meters	
120 meters	
150 meters	
180 meters	
210 meters	
240 meters	
270 meters	
300 meters	
Average	

Field Data Sheets – Basic RUAA Survey

Stream Name Caney Creek above tidal Site: 4
Date: 5-22-10 Time: 1024-1058

c) Stream width - Measure (1) the width at one point which represents the typical average width of the 300 meter reach; (2) the width at the narrowest point of the stream within the 300 meter reach; and (3) the width at the widest point of the stream within the 300 meter reach.

Measurement Type	Width (meters)
Typical Average Width of 300 meter reach	
Width at narrowest point of the stream within 300 meter reach	
Width at the widest point of the stream within 300 meter reach	

d) Is there sufficient water within a 300 meter stream reach during base flow conditions to support primary contact recreation? ☐ Yes ☒ No
COMMENTS:

2. Non-wadeable Streams
If accessible, take 10 width measurements which represent typical widths of the 300 meter reach. If the water is too deep and not accessible record the estimated average width of the water body.

Also, take photos facing upstream, downstream, left bank, and right bank at .
Photos #s (30 meters) Upstream____ Downstream____ Left Bank ____ Right Bank____
Photos #s (150 meters) Upstream____ Downstream____ Left Bank ____ Right Bank____
Photos #s (300 meters) Upstream____ Downstream____ Left Bank ____ Right Bank____

# Measurements	Width (meters)	
1	017 ft	/5.18
2	090 ft	/27.43
3	22 ft	/6.7
4	24 ft	/7.31
5		
6		
7		
8		
9		
10		

Visibility
distance upstream
distance downstream
width downstream
width upstream

* Thick vegetation and fence across channel.

Field Data Sheets – Basic RUAA Survey

Stream Name: Caney Creek above tidal Site: 4
Date: 5-22-10 Time: 1024-1058

F. Additional RUAA Information

1. Check the following activities observed over the site reach.

- ☐ Drinking or water in mouth
- ☐ Bathing
- ☐ Walking
- ☐ Jogging/running
- ☐ Bicycling
- ☐ Standing
- ☐ Sitting
- ☐ Lying down/sleeping
- ☐ Playing on shoreline
- ☐ Picnicking
- ☐ Motorcycle/ATV
- ☐ Hunting/Trapping
- ☐ Wildlife watching
- ☒ None
- ☐ Other: _____

2. Are there permanent or long-term hydrologic modifications that are constructed and operated in a way that affects the recreational uses? ☒ Yes ☐ No (If yes, please provide supporting documentation and photos.)
Comments: _____

3. Check any channel obstructions that apply (Attach photos).

- ☒ Culverts
- ☐ Barbed wire
- ☐ Utility pipe
- ☒ Fences
- ☐ Dams
- ☐ Other (specify): _____
- ☐ Log jams
- ☒ Thick vegetation
- ☐ Rip rap
- ☐ Low bridges
- ☐ Water control structure
- ☐ None

4. Check all surrounding conditions that promote recreational activities (Attach photos of evidence or unusual items of interest).

- ☐ Campgrounds
- ☐ Playgrounds
- ☒ Rural area
- ☐ Residential
- ☐ National forests
- ☐ Urban/suburban location
- ☐ Golf Course
- ☐ Sports Field
- ☐ Stairs/walkway
- ☐ Boating access (ramps)
- ☐ Beach
- ☒ Bridge crossing
- ☐ Commercial boating
- ☐ Trails/paths (hiking/biking)
- ☐ Paved parking lot
- ☐ Unimproved parking lot
- ☒ Roads (paved/unpaved)
- ☐ Populated area
- ☐ Docks or rafts
- ☐ Commercial outfitter
- ☐ Nearby school
- ☐ Power Line Corridor
- ☐ Parks (national/city/county/state)
- ☐ Public Property
- ☐ Other: _____
- ☐ None of the Above

Comments: House Next to Site

5. Check all surrounding conditions that impede recreational activities (Attach photos of evidence or unusual items of interest).

- ☐ Private Property
- ☐ No trespass sign
- ☐ Wildlife
- ☐ Steep slopes
- ☐ No public access
- ☐ No roads
- ☒ Fence
- ☐ Barge/ship traffic
- ☐ Industrial
- ☐ None of the Above
- ☒ Other: thick vegetation

Comments: _____

6. Check any indications of human use (Attach photos).

- ☒ Roads
- ☐ Rope swings
- ☐ Dock/platform
- ☐ Foot paths/prints
- ☐ Other: _____
- ☐ RV/ATV Tracks
- ☐ Camping Sites
- ☐ Fire pit/ring
- ☐ Fishing Tackle
- ☐ NPDES Discharge
- ☐ Gates on corridor
- ☐ Children's toys
- ☐ Remnant's of Kid's play
- ☐ Organized event
- ☐ No Human Presence

Comments: _____

Field Data Sheets – Basic RUAA Survey

Stream Name Caney Creek above tidal Site: 4
Date: 5-22-10 Time: 1024-1053

7. Check all water characteristics that apply (Attach photos).
Aquatic Vegetation: ☐ absent ☐ rare ☐ common ☒ abundant
Algae Cover: ☒ absent ☐ rare ☐ common ☐ abundant
Odor: ☒ none ☐ rare ☐ common ☐ abundant
Color: ☐ clear ☐ green ☐ red ☒ brown ☐ black
Bottom Deposit: ☐ sludge ☐ solids ☒ fine sediments ☐ none ☐ other
Water Surface: ☒ clear ☐ scum ☐ foam ☐ debris ☐ oil
Other:

8. Vertebrates Observed within 300 meter reach

Snakes	☒ None	☐ slight presence	☐ moderate presence	☐ large presence
Water Dependent Birds	☒ None	☐ slight presence	☐ moderate presence	☐ large presence
Alligators	☒ None	☐ slight presence	☐ moderate presence	☐ large presence

Comments:

9. Mammals Observed within 300 meter reach

Wild	☒ None	☐ slight presence	☐ moderate presence	☐ large presence
Domesticated Pets	☒ None	☐ slight presence	☐ moderate presence	☐ large presence
Livestock	☒ None	☐ slight presence	☐ moderate presence	☐ large presence
Feral Hogs	☒ None	☐ slight presence	☐ moderate presence	☐ large presence

Comments:

10. Evidence of wild animals or evidence of birds, cattle, hogs, etc.
☐ Tracks ☐ Fecal droppings ☐ Bird nests

11. Garbage Observed

Large garbage in the channel	☒ None	☐ Rare	☐ Common	☐ Abundant
Small garbage in the channel	☐ None	☒ Rare	☐ Common	☐ Abundant
Bank Garbage	☐ None	☒ Rare	☐ Common	☐ Abundant

Briefly describe the kinds of garbage observed: TRASH

12. Is the site located in a wildlife preserve with large wildlife (i.e waterfowl) population? ☐ Yes ☒ No

13. Please document any other relevant information regarding recreational activities and the water body in general (for example, area outside of the stream reach evaluated).
House Next to Site, CORN CROPS Along edge

Field Data Sheet - Basic RUAA Survey
Stream Flow (Discharge) Measurement

Stream: Caney Creek above tidal Date: 05/22/10
Site: 4 Site
Description: May Rd and CR 109 @ Caney Creek
Time Begin: 10:42 Time End: 10:49 Meter Type: Sontek Flowtracker
Observers: P. Lokanath Stream Width*: Section Width (W): 4 ft → culvert
Observations:

Section Midpoint (ft) (m)	Section Depth (ft) (m) (cm) (D)	Observational Depth** (ft)(m)	Velocity (V) At Point (ft/s)(m/s)	Velocity (V) Average (ft/s)(m/s)	Flow (Q) (m^3/s) (ft^3/s) Q = (W)(D)(V)
	1.5			0.00	0.00

Just took flow at the culvert

Total Q = 0.00 cfs

Site 5

Field Data Sheets – Basic RUAA Survey

(should be completed for each site)

Data Collectors & Contact Information:	M. Shepard, D. Ramirez, S. Curtis, C. Green
Date & Time: 5/14/10 0912-0944	County Name: Wharton
Stream Name: Caney Creek above tidal	
Segment No. or nearest downstream Segment No.: 1305	
Description of Site: FM 2817 @ Caney Creek	

At any point during the Basic RUAA Survey it becomes apparent that primary contact recreation is clearly the use for the water body the investigator should stop conducting the UAA.

A. Stream Characteristics:

1. Check the following channel flow status that applies.
☐ dry ☒ no flow ☐ low ☐ normal ☐ high ☐ flooded

2. Check the following stream type that applies on the day of the survey:
☐ Ephemeral: A stream which flows only during or immediately after a rainfall event, and contains no refuge pools capable of sustaining a viable community of aquatic organisms.
☐ Intermittent: A stream which has a period of zero flow for at least one week during most years. Where flow records are available, a stream with a 7Q2 flow of less than 0.1 cubic feet per second is considered intermittent.
☒ Intermittent w/ perennial pools: An intermittent stream which maintains persistent pools even when flow in the stream is less than 0.1 cubic feet per second.
☐ Perennial: A stream which flows continuously throughout the year. Perennial streams have a 7Q2 equal to or greater than 0.1 cubic feet per second.
☐ Designated or unclassified tidal stream: A stream that is tidally influenced. If you checked this box, you will need to contact the Water Quality Standards Group and evaluate whether or not a bathing beach is located along the tidal stream and whether or not a bathing beach is located along the estuary, bay or Gulf water that the tidal stream flows into.

3. Streamflow N/A
Use USGS gage data (if a gage is located at a site or within a quarter mile of a site) or use the Stream Flow (Discharge) Measurement Form and follow the procedures outlined in the most recent TCEQ Surface Water Quality Monitoring Procedures, Volume 1, RG-415. If USGS gage data is used for a site, include that information as an attachment and list the streamflow on the sampling date below. If the stream flow taken at one site is representative of the flow at another site(s), then that flow can be used as the observed flow and should be documented below. If the stream flow measured at one site is different from another site, then stream flow should be taken at both sites. _____ cfs Too little of water, no flow

4. Water Quality Data (Field Parameters)
Field parameters should be collected in accordance with the procedures outlined in the most recent TCEQ Surface Water Quality Monitoring Procedures, Volume 1.
Air Temp 29 °C Water Temp not taken °C Secchi ___ m

5. Riparian Zone (Mark dominant categories with L (Left Bank) and R (Right Bank). Bank orientation is determined by the investigator facing downstream.)

_____ Forest	_____ Urban	_____ Rip rap
_____ Shrub dominated corridor	R, L Pasture	_____ Concrete
_____ Herbaceous marsh	_____ Row crops	Other (specify): _____
R, L Mowed/maintained corridor	_____ Denuded/Eroded bank	

6. Ease of bank access to the water body: ☒ Easy ☐ Moderately easy ☐ Moderately difficult ☐ Difficult

7. Please describe access opportunities or explain why the site is not easily accessible (Attach photos for documentation): fence across water down but banks easy

8. Dominant Primary Substrate
☐ Cobble ☐ Sand ☐ Silt ☒ Mud/Clay ☐ Gravel ☐ Bedrock ☐ Rip rap ☐ Concrete

EMES
OCPL

Field Data Sheets – Basic RUAA Survey

Stream Name Caney Creek above tidal Site: 5
Date: 5/14/10 Time: 0912

B. Primary Contact Water Recreation Evaluation:
- Primary contact recreation draft definition: Water recreation activities, such as wading by children, swimming, water skiing, diving, tubing, surfing, and whitewater kayaking, canoeing, and rafting, involving a significant risk of ingestion of water.

1. Were water recreation activities that involve a significant risk of ingestion (full body immersion) observed at this site?
☐ Yes ☒ No primary contact recreation activities were observed
a. Check the following boxes of primary contact recreation activities observed at the time of the sampling event at the site (Attach photos of the activities or lack of activities).

☐ Wading-Children	☐ Tubing	☒ No primary contact activities that commonly occur were observed
☐ Wading-Adults	☐ Surfing	
☐ Swimming	☐ Whitewater-kayaking, canoeing, rafting	
☐ Water skiing	☐ Other: _____	
☐ Diving	☐ frequent public swimming-created by publicly owned land or commercial operations	

b. Check the number of individuals observed at the site: ☒ None ☐ 1-10 ☐ 11-20 ☐ 20-50 ☐ greater than 50

c. Check the following that apply regarding the individuals proximity to the water body.
☐ Water in mouth or nose of the individual ☐ Primary touch: Individual's body (or portion) immersed in water
☐ Secondary touch: fishing, pets and related contact with water ☐ Individual is in a boat touching water
☐ Individual is on shore near water within 8 meters (25ft) of water ☐ Individual is well away from water between 8 and 30 meters (100 ft) ☒ Not applicable

2. If primary contact recreation activities are not observed, describe the physical characteristics of the water body that may hinder the frequency of primary contact (depth, etc.) (Attach photos, etc. for documentation).
Very little, stagnant water, heavy vegetation & debris

3. Describe if there is public access (e.g. parks, roads, etc.) (Attach photos, maps, etc. for documentation).
can park on side of road

4. Is an area with primary contact recreation activities or a bathing beach (e.g. state/local parks with swimming, etc.) located near (e.g. within 5 miles upstream and downstream) this site? No

C. Secondary Contact Water Recreation Evaluation:
- Secondary contact recreation 1: Water recreation activities, such as fishing, commercial and recreational boating, and limited body contact incidental to shoreline activity, not involving a significant risk of water ingestion and that commonly occur.
- Secondary contact recreation 2: Water recreation activities, such as fishing, commercial and recreational boating, and limited body contact incidental to shoreline activity, not involving a significant risk of water ingestion but that occur less frequently than for secondary contact recreation 1 due to (1) physical characteristics of the water body and/or (2) limited public access.

1. Were water recreation activities observed at the site, but the nature of the recreation does not involve a significant risk of ingestion (e.g. secondary contact recreation activities)? ☐ Yes ☒ No secondary contact recreation activities were observed
a. Check the following boxes of secondary contact recreation activities that were observed at the time of the sampling event at the site (Attach photos of activities or lack of activities).
☐ Fishing
☐ Boating-commercial, recreational
☐ Non-whitewater-kayaking, rafting, canoeing
☒ No secondary contact recreation activities were observed
☐ Other secondary contact activities: _____

Field Data Sheets – Basic RUAA Survey

Stream Name Caney Creek above tidal Site: 5
Date: 5/14/10 Time: 0912

b. Check the number of individuals observed at the site.
X None ☐ 1-10 ☐ 11-20 ☐ 20-50 ☐ greater than 50

c. Check the following that apply regarding the individuals proximity to the water body.
☐ Secondary touch: fishing, pets and related contact with water ☐ In a boat touching water
☐ Body on shore near water within 8 meters (25ft) of water ☐ Body well away from water between 8 and 30 meters (100 ft) ☒ N/A

2. If secondary contact recreation activities are not observed, describe the physical characteristics of the water body that may hinder the frequency of secondary contact (Attach photos, etc. for documentation).
Same as ~~bf~~ before

3. If secondary contact recreation activities are observed, how often do water recreational activities occur that do not involve a significant risk of water ingestion? ☐ frequently ☐ infrequently ☒ N/A
Please describe how often the activities occur? ~~X Unknown~~ ☐ Never ☐ Daily ☐ Monthly ☐ Yearly

4. If infrequently, what is the reason? ☐ physical characteristics of the water body ☐ limited public access ☐ other
If other, list reasons: _____

5. Describe the physical characteristics of the water body that hinders the frequency of secondary contact recreation (depth, etc.) (Attach photos or depth measurements, etc. for documentation).
same as before

6. Describe why there is limited public access (e.g. lack of roads, river or stream banks overgrown, etc.) (Attach photos, maps, etc. for documentation).
lacking in real parking area, fence across water downstream

D. Noncontact Recreation Evaluation
Noncontact recreation applies to water bodies where recreation activities do not involve a significant risk of water ingestion, and where primary and secondary contact recreation uses do not occur because of unsafe conditions, such as barge traffic.

1. Provide site-specific information and documentation (including photographs) regarding unsafe conditions, recreation activities, and presence or absence of water recreation activities.
No water recreation activities

Field Data Sheets – Basic RUAA Survey

Stream Name Caney Creek above tidal Site: 5
Date: 5/14/10 FDS Page 3 of 8 Time: 0905

E. Stream Channel and Substantial Pools
Please check the following which best describes the river or stream: ☒ Wadeable ☐ Non-wadeable

1. Wadeable Streams
Determine whether or not the average depth at the thalweg is greater than 0.5 meters and if there are substantial pools with a depth of 1 meter or greater. Walk an approximately 300 meter reach (total) at the site and take the following measurements within the 300 meter reach. Measurements should be taken during base flow conditions (sustained or typical dry, warm-weather flows between rainfall events, excluding unusual antecedent conditions of drought or wet weather

Also, take photos facing upstream, downstream, left bank, and right bank at the 30 meters, 150 meters, and 300 meters.
Photos #s (30 meters) Upstream____ Downstream____ Left Bank ____ Right Bank____
Photos #s (150 meters) Upstream____ Downstream____ Left Bank ____ Right Bank____
Photos #s (300 meters) Upstream____ Downstream____ Left Bank ____ Right Bank____

upstream & downstream of bridge
-up -dn -lt -rt

a) Substantial pools - Measure the length of each pool (if > 10 pools only measure 10 pools), the width (at the widest point), and the deepest depth. A substantial pool is considered a pool greater than 10 meters in length for the purposes of a Basic RUAA Survey. If depth and/or width measurements were not attainable, explain why. unable to access entire pool due to fence

	Length (meters)	Width (meters)	Depth (meters)
Pool 1	unable to access	16.5 ft. (5.029m)	0.1 ft (0.0304m)
Pool 2			
Pool 3			
Pool 4			
Pool 5			
Pool 6			
Pool 7			
Pool 8			
Pool 9			
Pool 10			

b)Average depth at the thalweg –Take depth measurements approximately every 30 meters to calculate an average depth at the thalweg (at least 10 measurements needed). If depth and/or width measurements were not attainable, explain why. no water upstream of bridge

Distance	Depth (meters)
30 meters	0.1 ft (0.0304m)
60 meters	
90 meters	
120 meters	
150 meters	
180 meters	
210 meters	
240 meters	
270 meters	
300 meters	
Average	

Field Data Sheets – Basic RUAA Survey

Stream Name Caney Creek above tidal Site: 5
Date: 5/19/10 Time: 0905

c) Stream width - Measure (1) the width at one point which represents the typical average width of the 300 meter reach; (2) the width at the narrowest point of the stream within the 300 meter reach; and (3) the width at the widest point of the stream within the 300 meter reach.

no water upstream of bridge

width 16.5 ft

Measurement Type	Width (meters)
Typical Average Width of 300 meter reach	
Width at narrowest point of the stream within 300 meter reach	
Width at the widest point of the stream within 300 meter reach	

d) Is there sufficient water within a 300 meter stream reach during base flow conditions to support primary contact recreation? ☐ Yes ☒ No
COMMENTS:

2. Non-wadeable Streams N/A
If accessible, take 10 width measurements which represent typical widths of the 300 meter reach. If the water is too deep and not accessible record the estimated average width of the water body.

Also, take photos facing upstream, downstream, left bank, and right bank at .
Photos #s (30 meters) Upstream____ Downstream____ Left Bank ____ Right Bank____
Photos #s (150 meters) Upstream____ Downstream____ Left Bank ____ Right Bank____
Photos #s (300 meters) Upstream____ Downstream____ Left Bank ____ Right Bank____

# Measurements	Width (meters)
1	
2	
3	
4	
5	
6	
7	
8	
9	
10	

Area with water fenced

Field Data Sheets – Basic RUAA Survey

Stream Name Caney Creek above tidal Site: 5
Date: 5/14/10 Time: 0912

F. Additional RUAA Information

1. Check the following activities observed over the site reach.

- ☐ Drinking or water in mouth
- ☐ Bathing
- ☐ Walking
- ☐ Jogging/running
- ☐ Bicycling
- ☐ Standing
- ☐ Sitting
- ☐ Lying down/sleeping
- ☐ Playing on shoreline
- ☐ Picnicking
- ☐ Motorcycle/ATV
- ☐ Hunting/Trapping
- ☐ Wildlife watching
- ☒ None
- ☐ Other: _____

2. Are there permanent or long-term hydrologic modifications that are constructed and operated in a way that affects the recreational uses? ☒ Yes ☐ No (If yes, please provide supporting documentation and photos.)
Comments: bridge, though not necessarily hindering recreation

3. Check any channel obstructions that apply (Attach photos).

- ☐ Culverts
- ☐ Barbed wire
- ☐ Utility pipe
- ☒ Fences
- ☐ Dams
- ☐ Other (specify): _____
- ☒ Log jams
- ☒ Thick vegetation
- ☐ Rip rap
- ☐ Low bridges
- ☐ Water control structure
- ☐ None

4. Check all surrounding conditions that promote recreational activities (Attach photos of evidence or unusual items of interest).

- ☐ Campgrounds
- ☐ Playgrounds
- ☒ Rural area
- ☐ Residential
- ☐ National forests
- ☐ Urban/suburban location
- ☐ Golf Course
- ☐ Sports Field
- ☐ Stairs/walkway
- ☐ Boating access (ramps)
- ☐ Beach
- ☒ Bridge crossing
- ☐ Commercial boating
- ☐ Trails/paths (hiking/biking)
- ☐ Paved parking lot
- ☐ Unimproved parking lot
- ☒ Roads (paved/unpaved)
- ☒ Populated area
- ☐ Docks or rafts
- ☐ Commercial outfitter
- ☐ Nearby school
- ☐ Power Line Corridor
- ☐ Parks (national/city/county/state)
- ☐ Public Property
- ☐ Other: _____
- ☐ None of the Above

Comments: _____

5. Check all surrounding conditions that impede recreational activities (Attach photos of evidence or unusual items of interest).

- ☒ Private Property
- ☐ No trespass sign
- ☐ Wildlife
- ☐ Steep slopes
- ☐ No public access
- ☐ No roads
- ☒ Fence
- ☐ Barge/ship traffic
- ☐ Industrial
- ☐ None of the Above
- ☐ Other: _____

Comments: _____

6. Check any indications of human use (Attach photos).

- ☒ Roads
- ☐ Rope swings
- ☐ Dock/platform
- ☐ Foot paths/prints
- ☐ Other: _____
- ☐ RV/ATV Tracks
- ☐ Camping Sites
- ☐ Fire pit/ring
- ☐ Fishing Tackle
- ☐ NPDES Discharge
- ☐ Gates on corridor
- ☐ Children's toys
- ☐ Remnant's of Kid's play
- ☐ Organized event
- ☒ No Human Presence

Comments: _____

Field Data Sheets – Basic RUAA Survey

Stream Name Caney Creek above tidal Site: 5
Date: 5/14/10 Time: 0912

7. Check all water characteristics that apply (Attach photos).
Aquatic Vegetation: ☐ absent ☐ rare ☐ common ☒ abundant
Algae Cover: ☐ absent ☒ rare ☐ common ☐ abundant
Odor: ☒ none ☐ rare ☐ common ☐ abundant
Color: ☒ clear ☐ green ☐ red ☐ brown ☐ black
Bottom Deposit: ☐ sludge ☐ solids ☒ fine sediments ☐ none ☐ other
Water Surface: ☒ clear ☐ scum ☐ foam ☐ debris ☐ oil
Other:

8. Vertebrates Observed within 300 meter reach

Snakes	☐ None	☒ slight presence	☐ moderate presence	☐ large presence (1)
Water Dependent Birds	☒ None	☐ slight presence	☐ moderate presence	☐ large presence
Alligators	☒ None	☐ slight presence	☐ moderate presence	☐ large presence

Comments:

9. Mammals Observed within 300 meter reach

Wild	☒ None	☐ slight presence	☐ moderate presence	☐ large presence
Domesticated Pets	☒ None	☐ slight presence	☐ moderate presence	☐ large presence
Livestock	☒ None	☐ slight presence	☐ moderate presence	☐ large presence
Feral Hogs	☒ None	☐ slight presence	☐ moderate presence	☐ large presence

Comments:

10. Evidence of wild animals or evidence of birds, cattle, hogs, etc.
☒ Tracks ☐ Fecal droppings ☒ Bird nests raccoon & possibly feral hog
↳ lots of swallows

11. Garbage Observed

Large garbage in the channel	☒ None	☐ Rare	☐ Common	☐ Abundant
Small garbage in the channel	☐ None	☒ Rare	☐ Common	☐ Abundant
Bank Garbage	☒ None	☐ Rare	☐ Common	☐ Abundant

Briefly describe the kinds of garbage observed: 1 beer bottle

12. Is the site located in a wildlife preserve with large wildlife (i.e waterfowl) population? ☐ Yes ☒ No

13. Please document any other relevant information regarding recreational activities and the water body in general (for example, area outside of the stream reach evaluated).
~~next to~~ sod farms adjacent to creek

Field Data Sheet - Basic RUAA Survey

Stream Flow (Discharge) Measurement

Stream: Caney Creek above tidal Date: 5/14/10

Site: 5 Site

Description: FM 2817 @ Caney Creek

Time Begin: 0912 Time End: _____ Meter Type: Sontek Flowtracker

Observers: _____ Stream Width*: _____ Section Width (W): _____

Observations: _____

Section Midpoint (ft) (m)	Section Depth (ft) (m) (cm) (D)	Observational Depth** (ft)(m)	Velocity (V) At Point (ft/s)(m/s)	Velocity (V) Average (ft/s)(m/s)	Flow (Q) (m^3/s) (ft^3/s) Q = (W)(D)(V)

No water flow

Site 6

Field Data Sheets – Basic RUAA Survey

(should be completed for each site)

Data Collectors & Contact Information:	M. Shepard, D. Ramirez, S. Curtis, C. Green
Date & Time: 5/14/10 0950-1039	County Name: Wharton
Stream Name: Caney Creek above tidal	
Segment No. or nearest downstream Segment No.: 1305	
Description of Site: FM 1096 @ Caney Creek	

At any point during the Basic RUAA Survey it becomes apparent that primary contact recreation is clearly the use for the water body the investigator should stop conducting the UAA.

A. Stream Characteristics:

1. Check the following channel flow status that applies.
☐ dry ☐ no flow ☒ low ☐ normal ☐ high ☐ flooded

2. Check the following stream type that applies on the day of the survey:
☐ Ephemeral: A stream which flows only during or immediately after a rainfall event, and contains no refuge pools capable of sustaining a viable community of aquatic organisms.
☐ Intermittent: A stream which has a period of zero flow for at least one week during most years. Where flow records are available, a stream with a 7Q2 flow of less than 0.1 cubic feet per second is considered intermittent.
☒ Intermittent w/ perennial pools: An intermittent stream which maintains persistent pools even when flow in the stream is less than 0.1 cubic feet per second.
☐ Perennial: A stream which flows continuously throughout the year. Perennial streams have a 7Q2 equal to or greater than 0.1 cubic feet per second.
☐ Designated or unclassified tidal stream: A stream that is tidally influenced. If you checked this box, you will need to contact the Water Quality Standards Group and evaluate whether or not a bathing beach is located along the tidal stream and whether or not a bathing beach is located along the estuary, bay or Gulf water that the tidal stream flows into.

3. Streamflow
Use USGS gage data (if a gage is located at a site or within a quarter mile of a site) or use the Stream Flow (Discharge) Measurement Form and follow the procedures outlined in the most recent TCEQ Surface Water Quality Monitoring Procedures, Volume 1, RG-415. If USGS gage data is used for a site, include that information as an attachment and list the streamflow on the sampling date below. If the stream flow taken at one site is representative of the flow at another site(s), then that flow can be used as the observed flow and should be documented below. If the stream flow measured at one site is different from another site, then stream flow should be taken at both sites. ~0.074 cfs

4. Water Quality Data (Field Parameters)
Field parameters should be collected in accordance with the procedures outlined in the most recent TCEQ Surface Water Quality Monitoring Procedures, Volume 1.
Air Temp 30 °C Water Temp 25 °C Secchi 0.306 m

5. Riparian Zone (Mark dominant categories with L (Left Bank) and R (Right Bank). Bank orientation is determined by the investigator facing downstream.)

____ Forest	____ Urban	____ Rip rap
____ Shrub dominated corridor	LR Pasture	____ Concrete
____ Herbaceous marsh	____ Row crops	Other (specify): ____
LR Mowed/maintained corridor	____ Denuded/Eroded bank	

6. Ease of bank access to the water body: ☒ Easy ☐ Moderately easy ☐ Moderately difficult ☐ Difficult

7. Please describe access opportunities or explain why the site is not easily accessible (Attach photos for documentation):
Banks sloped easily where people can access, fence across up

8. Dominant Primary Substrate
☐ Cobble ☐ Sand ☐ Silt ☒ Mud/Clay ☐ Gravel ☐ Bedrock ☐ Rip rap ☐ Concrete

Q SD

E MES

Field Data Sheets – Basic RUAA Survey

Stream Name Caney Creek above tidal Site: 6
Date: 5/14/10 Time: 0950

B. Primary Contact Water Recreation Evaluation:
- Primary contact recreation draft definition: Water recreation activities, such as wading by children, swimming, water skiing, diving, tubing, surfing, and whitewater kayaking, canoeing, and rafting, involving a significant risk of ingestion of water.

1. Were water recreation activities that involve a significant risk of ingestion (full body immersion) observed at this site?
☐ Yes ☒ No primary contact recreation activities were observed
a. Check the following boxes of primary contact recreation activities observed at the time of the sampling event at the site (Attach photos of the activities or lack of activities).

☐ Wading-Children	☐ Tubing	☒ No primary contact activities that commonly occur were observed
☐ Wading-Adults	☐ Surfing	
☐ Swimming	☐ Whitewater-kayaking, canoeing, rafting	
☐ Water skiing	☐ Other: _____	
☐ Diving	☐ frequent public swimming-created by publicly owned land or commercial operations	

b. Check the number of individuals observed at the site: ☒ None ☐ 1-10 ☐ 11-20 ☐ 20-50 ☐ greater than 50

c. Check the following that apply regarding the individuals proximity to the water body.
☐ Water in mouth or nose of the individual ☐ Primary touch: Individual's body (or portion) immersed in water
☐ Secondary touch: fishing, pets and related contact with water ☐ Individual is in a boat touching water
☐ Individual is on shore near water within 8 meters (25ft) of water ☐ Individual is well away from water between 8 and 30 meters (100 ft) ☒ Not applicable

2. If primary contact recreation activities are not observed, describe the physical characteristics of the water body that may hinder the frequency of primary contact (depth, etc.) (Attach photos, etc. for documentation).
Shallow depth with heavy vegetation

3. Describe if there is public access (e.g. parks, roads, etc.) (Attach photos, maps, etc. for documentation).
no public parking, parked along road at bridge crossing; private property surrounding single access point

4. Is an area with primary contact recreation activities or a bathing beach (e.g. state/local parks with swimming, etc.) located near (e.g. within 5 miles upstream and downstream) this site? No

C. Secondary Contact Water Recreation Evaluation:
- Secondary contact recreation 1: Water recreation activities, such as fishing, commercial and recreational boating, and limited body contact incidental to shoreline activity, not involving a significant risk of water ingestion and that commonly occur.
- Secondary contact recreation 2: Water recreation activities, such as fishing, commercial and recreational boating, and limited body contact incidental to shoreline activity, not involving a significant risk of water ingestion but that occur less frequently than for secondary contact recreation 1 due to (1) physical characteristics of the water body and/or (2) limited public access.

1. Were water recreation activities observed at the site, but the nature of the recreation does not involve a significant risk of ingestion (e.g. secondary contact recreation activities)? ☐ Yes ☒ No secondary contact recreation activities were observed
a. Check the following boxes of secondary contact recreation activities that were observed at the time of the sampling event at the site (Attach photos of activities or lack of activities).
☐ Fishing
☐ Boating-commercial, recreational
☐ Non-whitewater-kayaking, rafting, canoeing
☒ No secondary contact recreation activities were observed
☐ Other secondary contact activities: _____

Field Data Sheets – Basic RUAA Survey

Stream Name Caney Creek above tidal Site: 6
Date: 5/14/10 Time: 0950

b. Check the number of individuals observed at the site.
X None ☐ 1-10 ☐ 11-20 ☐ 20-50 ☐ greater than 50

c. Check the following that apply regarding the individuals proximity to the water body.
☐ Secondary touch: fishing, pets and related contact with water ☐ In a boat touching water
☐ Body on shore near water within 8 meters (25ft) of water ☐ Body well away from water between 8 and 30 meters (100 ft) ☒ N/A

2. If secondary contact recreation activities are not observed, describe the physical characteristics of the water body that may hinder the frequency of secondary contact (Attach photos, etc. for documentation).

same as before

3. If secondary contact recreation activities are observed, how often do water recreational activities occur that do not involve a significant risk of water ingestion? ☐ frequently ☐ infrequently ☒ N/A
Please describe how often the activities occur? X Unknown ☐ Never ☐ Daily ☐ Monthly ☐ Yearly

4. If infrequently, what is the reason? X physical characteristics of the water body ☐ limited public access ☐ other
If other, list reasons: N/A

5. Describe the physical characteristics of the water body that hinders the frequency of secondary contact recreation (depth, etc.) (Attach photos or depth measurements, etc. for documentation).

same as before

6. Describe why there is limited public access (e.g. lack of roads, river or stream banks overgrown, etc.) (Attach photos, maps, etc. for documentation).

same as before

D. Noncontact Recreation Evaluation

Noncontact recreation applies to water bodies where recreation activities do not involve a significant risk of water ingestion, and where primary and secondary contact recreation uses do not occur because of unsafe conditions, such as barge traffic.

1. Provide site-specific information and documentation (including photographs) regarding unsafe conditions, recreation activities, and presence or absence of water recreation activities.

Field Data Sheets – Basic RUAA Survey

Stream Name Caney Creek above Tidal Site: 6
Date: 5/14/10 ~~FDS Page 3 of 8~~ Time: 0944

E. Stream Channel and Substantial Pools
Please check the following which best describes the river or stream: X Wadeable _ Non-wadeable

1. Wadeable Streams
Determine whether or not the average depth at the thalweg is greater than 0.5 meters and if there are substantial pools with a depth of 1 meter or greater. Walk an approximately 300 meter reach (total) at the site and take the following measurements within the 300 meter reach. Measurements should be taken during base flow conditions (sustained or typical dry, warm-weather flows between rainfall events, excluding unusual antecedent conditions of drought or wet weather

Also, take photos facing upstream, downstream, left bank, and right bank at the 30 meters, 150 meters, and 300 meters.
Photos #s (30 meters) Upstream ✓ Downstream ✓ Left Bank ✓ Right Bank ✓
Photos #s (150 meters) Upstream ✓ Downstream ✓ Left Bank ✓ Right Bank ✓
Photos #s (300 meters) Upstream ✓ Downstream ✓ Left Bank ✓ Right Bank ✓

a) Substantial pools - Measure the length of each pool (if > 10 pools only measure 10 pools), the width (at the widest point), and the deepest depth. A substantial pool is considered a pool greater than 10 meters in length for the purposes of a Basic RUAA Survey. If depth and/or width measurements were not attainable, explain why.

	(ft) Length	(meters) (m)	(ft) Width	(meters)	(ft) Depth	(meters)	
Pool 1	60	18.28	47	14.32	0.8	~~0.203~~	0.244
Pool 2	120	36.57	90	27.43	0.5	~~0.127~~	0.152
Pool 3							MFS
Pool 4							
Pool 5							
Pool 6							
Pool 7							
Pool 8							
Pool 9							
Pool 10							

b)Average depth at the thalweg –Take depth measurements approximately every 30 meters to calculate an average depth at the thalweg (at least 10 measurements needed). If depth and/or width measurements were not attainable, explain why.

Distance	(ft) Depth	(meters)
30 meters	0.2	0.061
60 meters	0.2	0.061
90 meters	0	0
120 meters	0.5	0.152
150 meters	0.65	0.198
180 meters	0.5	0.152
210 meters	0.7	0.213
240 meters	0.4	0.122
270 meters	0.5	0.152
300 meters	0.7	0.213
Average		0.131

Field Data Sheets – Basic RUAA Survey

Stream Name Caney Creek Above Tidal Site: 6
Date: 5/14/10 Time: 0944

c) Stream width - Measure (1) the width at one point which represents the typical average width of the 300 meter reach; (2) the width at the narrowest point of the stream within the 300 meter reach; and (3) the width at the widest point of the stream within the 300 meter reach.

Measurement Type	(ft) Width	(meters)
Typical Average Width of 300 meter reach	30	9.144
Width at narrowest point of the stream within 300 meter reach	0.50	0.152
Width at the widest point of the stream within 300 meter reach	90	27.432

d) Is there sufficient water within a 300 meter stream reach during base flow conditions to support primary contact recreation? ☒ Yes ☐ No
COMMENTS:
children wading

2. Non-wadeable Streams N/A
If accessible, take 10 width measurements which represent typical widths of the 300 meter reach. If the water is too deep and not accessible record the estimated average width of the water body.

Also, take photos facing upstream, downstream, left bank, and right bank at .
Photos #s (30 meters) Upstream____ Downstream____ Left Bank ____ Right Bank____
Photos #s (150 meters) Upstream____ Downstream____ Left Bank ____ Right Bank____
Photos #s (300 meters) Upstream____ Downstream____ Left Bank ____ Right Bank____

# Measurements	Width (meters)
1	
2	
3	
4	
5	
6	
7	
8	
9	
10	

Field Data Sheets – Basic RUAA Survey

Stream Name Caney Creek above tidal Site: 6
Date: 5/14/10 Time: 0950

F. Additional RUAA Information

1. Check the following activities observed over the site reach.

- ☐ Drinking or water in mouth
- ☐ Bathing
- ☐ Walking
- ☐ Jogging/running
- ☐ Bicycling
- ☐ Standing
- ☐ Sitting
- ☐ Lying down/sleeping
- ☐ Playing on shoreline
- ☐ Picnicking
- ☐ Motorcycle/ATV
- ☐ Hunting/Trapping
- ☐ Wildlife watching
- ☒ None
- ☐ Other: _____

2. Are there permanent or long-term hydrologic modifications that are constructed and operated in a way that affects the recreational uses? ☒ Yes ☐ No (If yes, please provide supporting documentation and photos.)
Comments: low bridge w/ culverts

3. Check any channel obstructions that apply (Attach photos).

- ☒ Culverts
- ☒ Fences
- ☐ Log jams
- ☐ Rip rap
- ☐ Water control structure
- ☐ Barbed wire
- ☐ Dams
- ☒ Thick vegetation
- ☒ Low bridges
- ☐ None
- ☐ Utility pipe
- ☐ Other (specify): _____

4. Check all surrounding conditions that promote recreational activities (Attach photos of evidence or unusual items of interest).

- ☐ Campgrounds
- ☐ Playgrounds
- ☒ Rural area
- ☒ Residential
- ☐ National forests
- ☐ Urban/suburban location
- ☐ Golf Course
- ☐ Sports Field
- ☐ Stairs/walkway
- ☐ Boating access (ramps)
- ☐ Beach
- ☒ Bridge crossing
- ☐ Commercial boating
- ☐ Trails/paths (hiking/biking)
- ☐ Paved parking lot
- ☐ Unimproved parking lot
- ☒ Roads (paved/unpaved)
- ☐ Populated area
- ☐ Docks or rafts
- ☐ Commercial outfitter
- ☐ Nearby school
- ☐ Power Line Corridor
- ☐ Parks (national/city/county/state)
- ☐ Public Property
- ☐ Other: _____
- ☐ None of the Above

Comments: _____

5. Check all surrounding conditions that impede recreational activities (Attach photos of evidence or unusual items of interest).

- ☒ Private Property
- ☐ No trespass sign
- ☐ Wildlife
- ☐ Steep slopes
- ☐ No public access
- ☐ No roads
- ☒ Fence
- ☐ Barge/ship traffic
- ☐ Industrial
- ☐ None of the Above
- ☐ Other: _____

Comments: _____

6. Check any indications of human use (Attach photos).

- ☒ Roads
- ☐ Rope swings
- ☐ Dock/platform
- ☐ Foot paths/prints
- ☐ Other: _____
- ☐ RV/ATV Tracks
- ☐ Camping Sites
- ☐ Fire pit/ring
- ☐ Fishing Tackle
- ☐ NPDES Discharge
- ☐ Gates on corridor
- ☐ Children's toys
- ☐ Remnant's of Kid's play
- ☐ Organized event
- ☒ No Human Presence

Comments: _____

Field Data Sheets – Basic RUAA Survey

Stream Name Caney Creek above tidal Site: 6
Date: 5/14/10 Time: 0950

7. Check all water characteristics that apply (Attach photos).
Aquatic Vegetation: ☐ absent ☐ rare ☐ common ☒ abundant
Algae Cover: ☐ absent ☒ rare ☐ common ☐ abundant
Odor: ☒ none ☐ rare ☐ common ☐ abundant
Color: ☐ clear ☐ green ☐ red ☒ brown ☐ black
Bottom Deposit: ☐ sludge ☐ solids ☒ fine sediments ☐ none ☐ other
Water Surface: ☒ clear ☐ scum ☐ foam ☐ debris ☐ oil
Other:

8. Vertebrates Observed within 300 meter reach
Snakes ☐ None ☒ slight presence ☐ moderate presence ☐ large presence 1 dead & 1 live
Water Dependent Birds (1) ☐ None ☒ slight presence ☐ moderate presence ☐ large presence
Alligators ☒ None ☐ slight presence ☐ moderate presence ☐ large presence
Comments:

9. Mammals Observed within 300 meter reach
Wild ☐ None ☒ slight presence ☐ moderate presence ☐ large presence 1/2 of dead armadillo
Domesticated Pets ☒ None ☐ slight presence ☐ moderate presence ☐ large presence
Livestock ☐ None ☒ slight presence ☐ moderate presence ☒ large presence - large herd
Feral Hogs ☒ None ☐ slight presence ☐ moderate presence ☐ large presence
Comments:

10. Evidence of wild animals or evidence of birds, cattle, hogs, etc.
☐ Tracks ☐ Fecal droppings ☐ Bird nests ☒ None

11. Garbage Observed
Large garbage in the channel ☒ None ☐ Rare ☐ Common ☐ Abundant
Small garbage in the channel ☒ None ☐ Rare ☐ Common ☐ Abundant
Bank Garbage ☒ None ☐ Rare ☐ Common ☐ Abundant
Briefly describe the kinds of garbage observed:

12. Is the site located in a wildlife preserve with large wildlife (i.e waterfowl) population? ☐ Yes ☒ No

13. Please document any other relevant information regarding recreational activities and the water body in general (for example, area outside of the stream reach evaluated).

Field Data Sheet - Basic RUAA Survey
Stream Flow (Discharge) Measurement

Stream: Caney Creek above tidal Date: 5/14/10
Site: 6 Site
Description: FM 1096 @ Caney Creek
Time Begin: 1015 Time End: 1036 Meter Type: Sontek Flowtracker
Observers: M. Shepard, D. Ramirez Stream Width*: 29.6 Section Width (W): 2.96
Observations: flow taken downstream of bridge (very little water farther up or down)

	Section Midpoint (ft) (m)	Section Depth (ft) (m) (cm) (D)	Observational Depth** (ft) (m)	Velocity (V) At Point (ft/s)(m/s)	Velocity (V) Average (ft/s)(m/s)	Flow (Q) (m^3/s) (ft^3/s) Q = (W)(D)(V)
1	1.48	~~0.6~~ 1.1			0.00	0.000
2	4.44	1.2			0.05	0.178
3	~~9.~~ 7.40	1.1			0.06	0.195
4	10.36	1.1			-0.10*	-0.326
5	13.32	1.1			-0.03*	-0.098
6	16.28	1.0			-0.03*	-0.089
7	19.24	1.0			0.04	0.118
8	22.20	0.9			0.01	0.027
9	25.16	0.9			-0.03	-0.080
10	28.12	0.8			0.00	0.000

* countercurrent wind
- bottom very soft

KC 10/28/10

Total Q = ~~-0.05~~ cfs
~~0.00~~ -0.074

E NES

Field Data Sheets – Basic RUAA Survey

Stream Name Caney Creek above tidal Site: 6
Date: 5/14/10 FDS Page 3 of 8 Time: 0944

E. Stream Channel and Substantial Pools
Please check the following which best describes the river or stream: X Wadeable ☐ Non-wadeable

1. Wadeable Streams
Determine whether or not the average depth at the thalweg is greater than 0.5 meters and if there are substantial pools with a depth of 1 meter or greater. Walk an approximately 300 meter reach (total) at the site and take the following measurements within the 300 meter reach. Measurements should be taken during base flow conditions (sustained or typical dry, warm-weather flows between rainfall events, excluding unusual antecedent conditions of drought or wet weather

Also, take photos facing upstream, downstream, left bank, and right bank at the 30 meters, 150 meters, and 300 meters.
Photos #s (30 meters) Upstream ✓ Downstream ✓ Left Bank ✓ Right Bank ✓
Photos #s (150 meters) Upstream ✓ Downstream ✓ Left Bank ✓ Right Bank ✓
Photos #s (300 meters) Upstream ✓ Downstream ✓ Left Bank ✓ Right Bank ✓

a) Substantial pools - Measure the length of each pool (if > 10 pools only measure 10 pools), the width (at the widest point), and the deepest depth. A substantial pool is considered a pool greater than 10 meters in length for the purposes of a Basic RUAA Survey. If depth and/or width measurements were not attainable, explain why.

	Length (meters)	Width (meters)	Depth (meters)
Pool 1	60 ft (18.28m)	47 ft (14.32m)	8 inches (0.20m)
Pool 2	120 m (36.57m)	90 ft (27.43m)	5 inches (0.126m)
Pool 3			
Pool 4			
Pool 5			
Pool 6			
Pool 7			
Pool 8			
Pool 9			
Pool 10			

b)Average depth at the thalweg –Take depth measurements approximately every 30 meters to calculate an average depth at the thalweg (at least 10 measurements needed). If depth and/or width measurements were not attainable, explain why.

Distance	Depth (meters)
30 meters	2 inches (0.0506m)
60 meters	2 inches (0.0506m)
90 meters	0 inches
120 meters	5 inches (0.126m)
150 meters	6.5 inches (0.164m)
180 meters	5 inches (0.126m)
210 meters	7 inches (0.177m)
240 meters	4 inches (0.100m)
270 meters	5 inches (0.126m)
300 meters	7 inches (0.177m)
Average	0.1097m

Field Data Sheets – Basic RUAA Survey

Stream Name Caney Creek above tidal Site: 6
Date: 5/14/10 Time: 0944

c) Stream width - Measure (1) the width at one point which represents the typical average width of the 300 meter reach; (2) the width at the narrowest point of the stream within the 300 meter reach; and (3) the width at the widest point of the stream within the 300 meter reach.

Measurement Type	Width (meters)
Typical Average Width of 300 meter reach	30 ft (9.144m)
Width at narrowest point of the stream within 300 meter reach	6 inches (0.15m)
Width at the widest point of the stream within 300 meter reach	90 ft (27.43m)

d) Is there sufficient water within a 300 meter stream reach during base flow conditions to support primary contact recreation? ☐ Yes ☐ No
COMMENTS:

2. Non-wadeable Streams
If accessible, take 10 width measurements which represent typical widths of the 300 meter reach. If the water is too deep and not accessible record the estimated average width of the water body.

Also, take photos facing upstream, downstream, left bank, and right bank at .
Photos #s (30 meters) Upstream ✓ Downstream ✓ Left Bank ✓ Right Bank ✓
Photos #s (150 meters) Upstream ✓ Downstream ✓ Left Bank ✓ Right Bank ✓
Photos #s (300 meters) Upstream ____ Downstream ____ Left Bank ____ Right Bank ____

# Measurements	Width (meters)
1	6 inches (0.15m)
2	
3	
4	
5	
6	
7	
8	
9	
10	

Site 7

Field Data Sheets – Basic RUAA Survey

(should be completed for each site)

Data Collectors & Contact Information:	M. Shepard, D. Ramirez, J. Curtis, C. Green
Date & Time: 5/14/10 1048 – 1107	County Name: Wharton
Stream Name: Caney Creek @ above tidal	
Segment No. or nearest downstream Segment No.: 1305	
Description of Site: Railroad St @ Caney Creek	

At any point during the Basic RUAA Survey it becomes apparent that primary contact recreation is clearly the use for the water body the investigator should stop conducting the UAA.

A. Stream Characteristics:

1. Check the following channel flow status that applies.
☐ dry ☒ no flow ☐ low ☐ normal ☐ high ☐ flooded

2. Check the following stream type that applies on the day of the survey:
☐ Ephemeral: A stream which flows only during or immediately after a rainfall event, and contains no refuge pools capable of sustaining a viable community of aquatic organisms.
☐ Intermittent: A stream which has a period of zero flow for at least one week during most years. Where flow records are available, a stream with a 7Q2 flow of less than 0.1 cubic feet per second is considered intermittent.
☒ Intermittent w/ perennial pools: An intermittent stream which maintains persistent pools even when flow in the stream is less than 0.1 cubic feet per second.
☐ Perennial: A stream which flows continuously throughout the year. Perennial streams have a 7Q2 equal to or greater than 0.1 cubic feet per second.
☐ Designated or unclassified tidal stream: A stream that is tidally influenced. If you checked this box, you will need to contact the Water Quality Standards Group and evaluate whether or not a bathing beach is located along the tidal stream and whether or not a bathing beach is located along the estuary, bay or Gulf water that the tidal stream flows into.

3. Streamflow N/A
Use USGS gage data (if a gage is located at a site or within a quarter mile of a site) or use the Stream Flow (Discharge) Measurement Form and follow the procedures outlined in the most recent TCEQ Surface Water Quality Monitoring Procedures, Volume 1, RG-415. If USGS gage data is used for a site, include that information as an attachment and list the streamflow on the sampling date below. If the stream flow taken at one site is representative of the flow at another site(s), then that flow can be used as the observed flow and should be documented below. If the stream flow measured at one site is different from another site, then stream flow should be taken at both sites. _____ cfs no flow taken little water

4. Water Quality Data (Field Parameters)
Field parameters should be collected in accordance with the procedures outlined in the most recent TCEQ Surface Water Quality Monitoring Procedures, Volume 1.
Air Temp 31 °C Water Temp / °C Secchi / m

5. Riparian Zone (Mark dominant categories with L (Left Bank) and R (Right Bank). Bank orientation is determined by the investigator facing downstream.)

R/L Forest	_____ Urban	_____ Rip rap
_____ Shrub dominated corridor	R Pasture	_____ Concrete
_____ Herbaceous marsh	_____ Row crops	Other (specify): _____
_____ Mowed/maintained corridor	_____ Denuded/Eroded bank	

6. Ease of bank access to the water body: ☐ Easy ☒ Moderately easy ☐ Moderately difficult ☐ Difficult

7. Please describe access opportunities or explain why the site is not easily accessible (Attach photos for documentation): thick vegetation on banks

8. Dominant Primary Substrate
☐ Cobble ☐ Sand ☐ Silt ☒ Mud/Clay ☐ Gravel ☐ Bedrock ☐ Rip rap ☐ Concrete

Field Data Sheets – Basic RUAA Survey

Stream Name Caney Creek above tidal Site: 7
Date: 5/14/10 Time: 1048

B. Primary Contact Water Recreation Evaluation:
- Primary contact recreation draft definition: Water recreation activities, such as wading by children, swimming, water skiing, diving, tubing, surfing, and whitewater kayaking, canoeing, and rafting, involving a significant risk of ingestion of water.

1. Were water recreation activities that involve a significant risk of ingestion (full body immersion) observed at this site?
☐ Yes ☒ No primary contact recreation activities were observed

a. Check the following boxes of primary contact recreation activities observed at the time of the sampling event at the site (Attach photos of the activities or lack of activities).

☐ Wading-Children ☐ Tubing ☒ No primary contact activities that commonly occur were observed
☐ Wading-Adults ☐ Surfing
☐ Swimming ☐ Whitewater-kayaking, canoeing, rafting
☐ Water skiing ☐ Other: _____
☐ Diving ☐ frequent public swimming-created by publicly owned land or commercial operations

b. Check the number of individuals observed at the site: ☒ None ☐ 1-10 ☐ 11-20 ☐ 20-50 ☐ greater than 50

c. Check the following that apply regarding the individuals proximity to the water body.
☐ Water in mouth or nose of the individual ☐ Primary touch: Individual's body (or portion) immersed in water
☐ Secondary touch: fishing, pets and related contact with water ☐ Individual is in a boat touching water
☐ Individual is on shore near water within 8 meters (25ft) of water ☐ Individual is well away from water between 8 and 30 meters (100 ft) ☒ Not applicable

2. If primary contact recreation activities are not observed, describe the physical characteristics of the water body that may hinder the frequency of primary contact (depth, etc.) (Attach photos, etc. for documentation).
thick vegetation (~~aquatic & ripar~~ NES) & (riparian) → no channel
very little water present

3. Describe if there is public access (e.g. parks, roads, etc.) (Attach photos, maps, etc. for documentation).
can park along road, no public parking
private property surrounds single access pt @ bridge/road crossing

4. Is an area with primary contact recreation activities or a bathing beach (e.g. state/local parks with swimming, etc.) located near (e.g. within 5 miles upstream and downstream) this site? No

C. Secondary Contact Water Recreation Evaluation:
- Secondary contact recreation 1: Water recreation activities, such as fishing, commercial and recreational boating, and limited body contact incidental to shoreline activity, not involving a significant risk of water ingestion and that commonly occur.
- Secondary contact recreation 2: Water recreation activities, such as fishing, commercial and recreational boating, and limited body contact incidental to shoreline activity, not involving a significant risk of water ingestion but that occur less frequently than for secondary contact recreation 1 due to (1) physical characteristics of the water body and/or (2) limited public access.

1. Were water recreation activities observed at the site, but the nature of the recreation does not involve a significant risk of ingestion (e.g. secondary contact recreation activities)? ☐ Yes ☒ No secondary contact recreation activities were observed

a. Check the following boxes of secondary contact recreation activities that were observed at the time of the sampling event at the site (Attach photos of activities or lack of activities).
☐ Fishing
☐ Boating-commercial, recreational
☐ Non-whitewater-kayaking, rafting, canoeing
☒ No secondary contact recreation activities were observed
☐ Other secondary contact activities: _____

Field Data Sheets – Basic RUAA Survey

Stream Name Caney Creek above tidal Site: 7
Date: 5/14/10 Time: 1048

b. Check the number of individuals observed at the site.
☒ None ☐ 1-10 ☐ 11-20 ☐ 20-50 ☐ greater than 50

c. Check the following that apply regarding the individuals proximity to the water body.
☐ Secondary touch: fishing, pets and related contact with water ☐ In a boat touching water
☐ Body on shore near water within 8 meters (25ft) of water ☐ Body well away from water between 8 and 30 meters (100 ft) ☒ N/A

2. If secondary contact recreation activities are not observed, describe the physical characteristics of the water body that may hinder the frequency of secondary contact (Attach photos, etc. for documentation).
Same as before

3. If secondary contact recreation activities are observed, how often do water recreational activities occur that do not involve a significant risk of water ingestion? ☐ frequently ☐ infrequently ☒ N/A
Please describe how often the activities occur? ☒ Unknown ☐ Never ☐ Daily ☐ Monthly ☐ Yearly

4. If infrequently, what is the reason? ☐ physical characteristics of the water body ☐ limited public access ☐ other
If other, list reasons: N/A

5. Describe the physical characteristics of the water body that hinders the frequency of secondary contact recreation (depth, etc.) (Attach photos or depth measurements, etc. for documentation).
Same as before

6. Describe why there is limited public access (e.g. lack of roads, river or stream banks overgrown, etc.) (Attach photos, maps, etc. for documentation).
Same as before

D. Noncontact Recreation Evaluation
Noncontact recreation applies to water bodies where recreation activities do not involve a significant risk of water ingestion, and where primary and secondary contact recreation uses do not occur because of unsafe conditions, such as barge traffic.

1. Provide site-specific information and documentation (including photographs) regarding unsafe conditions, recreation activities, and presence or absence of water recreation activities.

Field Data Sheets – Basic RUAA Survey

Stream Name Caney Creek above tidal Site: 7
Date: 5-14-10 ~~FDS Page 3 of 8~~ Time: 1048

E. Stream Channel and Substantial Pools
Please check the following which best describes the river or stream: ☑ Wadeable ☐ Non-wadeable

1. Wadeable Streams
Determine whether or not the average depth at the thalweg is greater than 0.5 meters and if there are substantial pools with a depth of 1 meter or greater. Walk an approximately 300 meter reach (total) at the site and take the following measurements within the 300 meter reach. Measurements should be taken during base flow conditions (sustained or typical dry, warm-weather flows between rainfall events, excluding unusual antecedent conditions of drought or wet weather

Also, take photos facing upstream, downstream, left bank, and right bank at the 30 meters, 150 meters, and 300 meters.
Photos #s (30 meters) Upstream____ Downstream____ Left Bank ____ Right Bank____
Photos #s (150 meters) Upstream____ Downstream____ Left Bank ____ Right Bank____
Photos #s (300 meters) Upstream____ Downstream____ Left Bank ____ Right Bank____

upstream & downstream of bridge
-up -dn -lt -rt

a) Substantial pools - Measure the length of each pool (if > 10 pools only measure 10 pools), the width (at the widest point), and the deepest depth. A substantial pool is considered a pool greater than 10 meters in length for the purposes of a Basic RUAA Survey. If depth and/or width measurements were not attainable, explain why.

pools on each side of road length is of total

	Length (meters)	Width (meters)	Depth (meters)
Pool 1	(43.89m) 144 ft > combined ft	16 ft (4.87m)	0.2 ft (0.06m)
Pool 2		28 (8.53m)	0.2 (0.06m)
Pool 3			
Pool 4			
Pool 5			
Pool 6			
Pool 7			
Pool 8			
Pool 9			
Pool 10			

b)Average depth at the thalweg –Take depth measurements approximately every 30 meters to calculate an average depth at the thalweg (at least 10 measurements needed). If depth and/or width measurements were not attainable, explain why.

Distance	Depth (meters)
30 meters	0.2 ft (0.06m)
60 meters	
90 meters	
120 meters	
150 meters	
180 meters	
210 meters	
240 meters	
270 meters	
300 meters	
Average	

Field Data Sheets – Basic RUAA Survey

Stream Name Caney Creek above tidal Site: 7
Date: 5-14-10 Time: 1048

c) Stream width - Measure (1) the width at one point which represents the typical average width of the 300 meter reach; (2) the width at the narrowest point of the stream within the 300 meter reach; and (3) the width at the widest point of the stream within the 300 meter reach.

no water upstream

Measurement Type	Width (meters)
Typical Average Width of 300 meter reach	~~16 ft~~ DKR 5-19-10
Width at narrowest point of the stream within 300 meter reach	
Width at the widest point of the stream within 300 meter reach	~~28 ft~~ DKR 5-19-10

d) Is there sufficient water within a 300 meter stream reach during base flow conditions to support primary contact recreation? ☐ Yes ☑ No

COMMENTS:
0.2 ft of water
(0.06 m)

2. Non-wadeable Streams n/a
If accessible, take 10 width measurements which represent typical widths of the 300 meter reach. If the water is too deep and not accessible record the estimated average width of the water body.

Also, take photos facing upstream, downstream, left bank, and right bank at .
Photos #s (30 meters) Upstream____ Downstream____ Left Bank ____ Right Bank____
Photos #s (150 meters) Upstream____ Downstream____ Left Bank ____ Right Bank____
Photos #s (300 meters) Upstream____ Downstream____ Left Bank ____ Right Bank____

# Measurements	Width (meters)
1	
2	
3	
4	
5	
6	
7	
8	
9	
10	

Field Data Sheets – Basic RUAA Survey

Stream Name: Caney Creek above tidal Site: 7
Date: 5/14/10 Time: 1048

F. Additional RUAA Information

1. Check the following activities observed over the site reach.

- ☐ Drinking or water in mouth
- ☐ Bathing
- ☐ Walking
- ☐ Jogging/running
- ☐ Bicycling
- ☐ Standing
- ☐ Sitting
- ☐ Lying down/sleeping
- ☐ Playing on shoreline
- ☐ Picnicking
- ☐ Motorcycle/ATV
- ☐ Hunting/Trapping
- ☐ Wildlife watching
- ☒ None
- ☐ Other: _____

2. Are there permanent or long-term hydrologic modifications that are constructed and operated in a way that affects the recreational uses? ☒ Yes ☐ No (If yes, please provide supporting documentation and photos.)
Comments: bridge w/ large culvert

3. Check any channel obstructions that apply (Attach photos).

- ☒ Culverts
- ☐ Barbed wire
- ☐ Utility pipe
- ☐ Fences
- ☐ Dams
- ☐ Other (specify): _____
- ☒ Log jams
- ☒ Thick vegetation
- ☐ Rip rap
- ☒ Low bridges
- ☐ Water control structure
- ☐ None

4. Check all surrounding conditions that promote recreational activities (Attach photos of evidence or unusual items of interest).

- ☐ Campgrounds
- ☐ Playgrounds
- ☒ Rural area
- ☒ Residential
- ☐ National forests
- ☐ Urban/suburban location
- ☐ Golf Course
- ☐ Sports Field
- ☐ Stairs/walkway
- ☐ Boating access (ramps)
- ☐ Beach
- ☒ Bridge crossing
- ☐ Commercial boating
- ☐ Trails/paths (hiking/biking)
- ☐ Paved parking lot
- ☐ Unimproved parking lot
- ☒ Roads (paved/unpaved)
- ☐ Populated area
- ☐ Docks or rafts
- ☐ Commercial outfitter
- ☐ Nearby school
- ☐ Power Line Corridor
- ☐ Parks (national/city/county/state)
- ☐ Public Property
- ☐ Other: _____
- ☐ None of the Above

Comments: _____

5. Check all surrounding conditions that impede recreational activities (Attach photos of evidence or unusual items of interest).

- ☒ Private Property
- ☐ No trespass sign
- ☐ Wildlife
- ☐ Steep slopes
- ☐ No public access
- ☐ No roads
- ☐ Fence
- ☐ Barge/ship traffic
- ☐ Industrial
- ☐ None of the Above
- ☐ Other: _____

Comments: _____

6. Check any indications of human use (Attach photos).

- ☒ Roads
- ☐ Rope swings
- ☐ Dock/platform
- ☐ Foot paths/prints
- ☐ Other: _____
- ☐ RV/ATV Tracks
- ☐ Camping Sites
- ☐ Fire pit/ring
- ☐ Fishing Tackle
- ☐ NPDES Discharge
- ☐ Gates on corridor
- ☐ Children's toys
- ☐ Remnant's of Kid's play
- ☐ Organized event
- ☒ No Human Presence

Comments: _____

Field Data Sheets – Basic RUAA Survey

Stream Name Caney Creek above tidal Site: 7
Date: 5/14/10 Time: 1048

7. Check all water characteristics that apply (Attach photos).
Aquatic Vegetation: ☐ absent ☒ rare ☐ common ☐ abundant
Algae Cover: ☒ absent ☐ rare ☐ common ☐ abundant
Odor: ☐ none ☒ rare ☐ common ☐ abundant
Color: ☐ clear ☐ green ☐ red ☒ brown ☐ black
Bottom Deposit: ☐ sludge ☐ solids ☒ fine sediments ☐ none ☐ other
Water Surface: ☒ clear ☐ scum ☐ foam ☐ debris ☐ oil
Other:

8. Vertebrates Observed within 300 meter reach
Snakes ☒ None ☐ slight presence ☐ moderate presence ☐ large presence
Water Dependent Birds ☐ None ☒ slight presence ☐ moderate presence ☐ large presence
Alligators ☒ None ☐ slight presence ☐ moderate presence ☐ large presence
Comments:

9. Mammals Observed within 300 meter reach
Wild ☒ None ☐ slight presence ☐ moderate presence ☐ large presence
Domesticated Pets ☒ None ☐ slight presence ☐ moderate presence ☐ large presence
Livestock ☒ None ☐ slight presence ☐ moderate presence ☐ large presence
Feral Hogs ☒ None ☐ slight presence ☐ moderate presence ☐ large presence
Comments:

10. Evidence of wild animals or evidence of birds, cattle, hogs, etc.
☒ Tracks ☐ Fecal droppings ☐ Bird nests

11. Garbage Observed
Large garbage in the channel ☒ None ☐ Rare ☐ Common ☐ Abundant
Small garbage in the channel ☐ None ☐ Rare ☒ Common ☐ Abundant
Bank Garbage ☐ None ☐ Rare ☒ Common ☐ Abundant
Briefly describe the kinds of garbage observed: beer cans & bottles, bucket

12. Is the site located in a wildlife preserve with large wildlife (i.e waterfowl) population? ☐ Yes ☒ No

13. Please document any other relevant information regarding recreational activities and the water body in general (for example, area outside of the stream reach evaluated).

Field Data Sheet - Basic RUAA Survey

Stream Flow (Discharge) Measurement

Stream: Caney Creek above tidal Date: 5/14/10

Site: Site

Description: Railroad St @ Caney Creek

Time Begin: 1048 Time End: Meter Type: Sontek Flowtracker

Observers: Stream Width*: Section Width (W):

Observations:

Section Midpoint (ft) (m)	Section Depth (ft) (m) (cm) (D)	Observational Depth** (ft)(m)	Velocity (V)		Flow (Q) (m^3/s) (ft^3/s) Q = (W)(D)(V)
			At Point (ft/s)(m/s)	Average (ft/s)(m/s)	

No flow
Little water

Site 8

Field Data Sheets – Basic RUAA Survey

(should be completed for each site)

Data Collectors & Contact Information: D. Ramirez, M. Shepard, S. Curtis, C. Green	
Date & Time: 5/14/10 1107 - 1129	County Name: Wharton
Stream Name: Caney Creek above tidal	
Segment No. or nearest downstream Segment No.: 1305	
Description of Site: FM 442 @ Caney Creek	

At any point during the Basic RUAA Survey it becomes apparent that primary contact recreation is clearly the use for the water body the investigator should stop conducting the UAA.

A. Stream Characteristics:

1. Check the following channel flow status that applies.

X dry ☐ no flow ☐ low ☐ normal ☐ high ☐ flooded

2. Check the following stream type that applies on the day of the survey:

X Ephemeral: A stream which flows only during or immediately after a rainfall event, and contains no refuge pools capable of sustaining a viable community of aquatic organisms.

☐ Intermittent: A stream which has a period of zero flow for at least one week during most years. Where flow records are available, a stream with a 7Q2 flow of less than 0.1 cubic feet per second is considered intermittent.

☐ Intermittent w/ perennial pools: An intermittent stream which maintains persistent pools even when flow in the stream is less than 0.1 cubic feet per second.

☐ Perennial: A stream which flows continuously throughout the year. Perennial streams have a 7Q2 equal to or greater than 0.1 cubic feet per second.

☐ Designated or unclassified tidal stream: A stream that is tidally influenced. If you checked this box, you will need to contact the Water Quality Standards Group and evaluate whether or not a bathing beach is located along the tidal stream and whether or not a bathing beach is located along the estuary, bay or Gulf water that the tidal stream flows into.

3. Streamflow

Use USGS gage data (if a gage is located at a site or within a quarter mile of a site) or use the Stream Flow (Discharge) Measurement Form and follow the procedures outlined in the most recent TCEQ Surface Water Quality Monitoring Procedures, Volume 1, RG-415. If USGS gage data is used for a site, include that information as an attachment and list the streamflow on the sampling date below. If the stream flow taken at one site is representative of the flow at another site(s), then that flow can be used as the observed flow and should be documented below. If the stream flow measured at one site is different from another site, then stream flow should be taken at both sites. ___/___ cfs No water

4. Water Quality Data (Field Parameters)

Field parameters should be collected in accordance with the procedures outlined in the most recent TCEQ Surface Water Quality Monitoring Procedures, Volume 1. No water

Air Temp 31 °C Water Temp ___/___ °C Secchi ___ ms

5. Riparian Zone (Mark dominant categories with L (Left Bank) and R (Right Bank). Bank orientation is determined by the investigator facing downstream.)

R Forest	___ Urban	___ Rip rap
___ Shrub dominated corridor	___ Pasture	___ Concrete
___ Herbaceous marsh	___ Row crops	Other (specify): ___
L/R Mowed/maintained corridor	___ Denuded/Eroded bank	

6. Ease of bank access to the water body: X Easy ☐ Moderately easy ☐ Moderately difficult ☐ Difficult

7. Please describe access opportunities or explain why the site is not easily accessible (Attach photos for documentation):

Private property surrounding bridge crossing except on downstream right corner

8. Dominant Primary Substrate

☐ Cobble ☐ Sand ☐ Silt X Mud/Clay ☐ Gravel ☐ Bedrock ☐ Rip rap ☐ Concrete

228 Q2 DR E MES QC PL

Field Data Sheets – Basic RUAA Survey

Stream Name Caney Creek above tidal Site: 8
Date: 5/14/10 Time: 1107

B. Primary Contact Water Recreation Evaluation:
- Primary contact recreation draft definition: Water recreation activities, such as wading by children, swimming, water skiing, diving, tubing, surfing, and whitewater kayaking, canoeing, and rafting, involving a significant risk of ingestion of water.

1. Were water recreation activities that involve a significant risk of ingestion (full body immersion) observed at this site?
☐ Yes ☒ No primary contact recreation activities were observed
a. Check the following boxes of primary contact recreation activities observed at the time of the sampling event at the site (Attach photos of the activities or lack of activities).

☐ Wading-Children	☐ Tubing	☒ No primary contact activities that commonly occur were observed
☐ Wading-Adults	☐ Surfing	
☐ Swimming	☐ Whitewater-kayaking, canoeing, rafting	
☐ Water skiing	☐ Other: _____	
☐ Diving	☐ frequent public swimming-created by publicly owned land or commercial operations	

b. Check the number of individuals observed at the site: ☒ None ☐ 1-10 ☐ 11-20 ☐ 20-50 ☐ greater than 50

c. Check the following that apply regarding the individuals proximity to the water body.
☐ Water in mouth or nose of the individual ☐ Primary touch: Individual's body (or portion) immersed in water
☐ Secondary touch: fishing, pets and related contact with water ☐ Individual is in a boat touching water
☐ Individual is on shore near water within 8 meters (25ft) of water ☐ Individual is well away from water between 8 and 30 meters (100 ft) ☒ Not applicable

2. If primary contact recreation activities are not observed, describe the physical characteristics of the water body that may hinder the frequency of primary contact (depth, etc.) (Attach photos, etc. for documentation).
No water, thick aquatic vegetation downstream

3. Describe if there is public access (e.g. parks, roads, etc.) (Attach photos, maps, etc. for documentation).
road crossing, can pull-off side of road - wide shoulder, grassy area at Boling Water district office NO parking lot

4. Is an area with primary contact recreation activities or a bathing beach (e.g. state/local parks with swimming, etc.) located near (e.g. within 5 miles upstream and downstream) this site? NO

C. Secondary Contact Water Recreation Evaluation:
- Secondary contact recreation 1: Water recreation activities, such as fishing, commercial and recreational boating, and limited body contact incidental to shoreline activity, not involving a significant risk of water ingestion and that commonly occur.
- Secondary contact recreation 2: Water recreation activities, such as fishing, commercial and recreational boating, and limited body contact incidental to shoreline activity, not involving a significant risk of water ingestion but that occur less frequently than for secondary contact recreation 1 due to (1) physical characteristics of the water body and/or (2) limited public access.

1. Were water recreation activities observed at the site, but the nature of the recreation does not involve a significant risk of ingestion (e.g. secondary contact recreation activities)? ☐ Yes ☒ No secondary contact recreation activities were observed
a. Check the following boxes of secondary contact recreation activities that were observed at the time of the sampling event at the site (Attach photos of activities or lack of activities).
☐ Fishing
☐ Boating-commercial, recreational
☐ Non-whitewater-kayaking, rafting, canoeing
☒ No secondary contact recreation activities were observed
☐ Other secondary contact activities: _____

Field Data Sheets – Basic RUAA Survey

Stream Name Caney Creek above tidal Site: 8
Date: 5/14/10 Time: 1107

b. Check the number of individuals observed at the site.
X None ☐ 1-10 ☐ 11-20 ☐ 20-50 ☐ greater than 50

c. Check the following that apply regarding the individuals proximity to the water body.
☐ Secondary touch: fishing, pets and related contact with water ☐ In a boat touching water
☐ Body on shore near water within 8 meters (25ft) of water ☐ Body well away from water between 8 and 30 meters (100 ft) N/A

2. If secondary contact recreation activities are not observed, describe the physical characteristics of the water body that may hinder the frequency of secondary contact (Attach photos, etc. for documentation).
No water

3. If secondary contact recreation activities are observed, how often do water recreational activities occur that do not involve a significant risk of water ingestion? ☐ frequently ☐ infrequently N/A
Please describe how often the activities occur? X Unknown ☐ Never ☐ Daily ☐ Monthly ☐ Yearly

4. If infrequently, what is the reason? ☐ physical characteristics of the water body ☐ limited public access ☐ other
If other, list reasons:

5. Describe the physical characteristics of the water body that hinders the frequency of secondary contact recreation (depth, etc.) (Attach photos or depth measurements, etc. for documentation).
No water, same as before

6. Describe why there is limited public access (e.g. lack of roads, river or stream banks overgrown, etc.) (Attach photos, maps, etc. for documentation).
same as before

D. Noncontact Recreation Evaluation

Noncontact recreation applies to water bodies where recreation activities do not involve a significant risk of water ingestion, and where primary and secondary contact recreation uses do not occur because of unsafe conditions, such as barge traffic.

1. Provide site-specific information and documentation (including photographs) regarding unsafe conditions, recreation activities, and presence or absence of water recreation activities.
No water

Field Data Sheets – Basic RUAA Survey

Stream Name Caney Creek above tidal Site: 8
Date: 5/14/10 FDS Page 3 of 8 Time: 11:09

E. Stream Channel and Substantial Pools
Please check the following which best describes the river or stream: X Wadeable Non-wadeable

1. Wadeable Streams No coater
Determine whether or not the average depth at the thalweg is greater than 0.5 meters and if there are substantial pools with a depth of 1 meter or greater. Walk an approximately 300 meter reach (total) at the site and take the following measurements within the 300 meter reach. Measurements should be taken during base flow conditions (sustained or typical dry, warm-weather flows between rainfall events, excluding unusual antecedent conditions of drought or wet weather

Also, take photos facing upstream, downstream, left bank, and right bank at the 30 meters, 150 meters, and 300 meters.
Photos #s (30 meters) Upstream ✓ Downstream ✓ Left Bank ✓ Right Bank ✓
Photos #s (150 meters) Upstream ✓ Downstream ✓ Left Bank ✓ Right Bank ✓
Photos #s (300 meters) Upstream ✓ Downstream ✓ Left Bank ✓ Right Bank ✓

a) Substantial pools - Measure the length of each pool (if > 10 pools only measure 10 pools), the width (at the widest point), and the deepest depth. A substantial pool is considered a pool greater than 10 meters in length for the purposes of a Basic RUAA Survey. If depth and/or width measurements were not attainable, explain why.

	Length (meters)	Width (meters)	Depth (meters)
Pool 1			
Pool 2			
Pool 3			
Pool 4			
Pool 5			
Pool 6			
Pool 7			
Pool 8			
Pool 9			
Pool 10			

b)Average depth at the thalweg –Take depth measurements approximately every 30 meters to calculate an average depth at the thalweg (at least 10 measurements needed). If depth and/or width measurements were not attainable, explain why.

Distance	Depth (meters)
30 meters	
60 meters	
90 meters	
120 meters	
150 meters	
180 meters	
210 meters	
240 meters	
270 meters	
300 meters	
Average	

Field Data Sheets – Basic RUAA Survey

Stream Name Caney Creek above tidal Site: 8
Date: 05/14/10 Time: 1107

c) Stream width - Measure (1) the width at one point which represents the typical average width of the 300 meter reach; (2) the width at the narrowest point of the stream within the 300 meter reach; and (3) the width at the widest point of the stream within the 300 meter reach.

Measurement Type	Width (meters)
Typical Average Width of 300 meter reach	
Width at narrowest point of the stream within 300 meter reach	
Width at the widest point of the stream within 300 meter reach	

d) Is there sufficient water within a 300 meter stream reach during base flow conditions to support primary contact recreation? ☐ Yes ☒ No
COMMENTS:
No water

2. Non-wadeable Streams N/A
If accessible, take 10 width measurements which represent typical widths of the 300 meter reach. If the water is too deep and not accessible record the estimated average width of the water body.

Also, take photos facing upstream, downstream, left bank, and right bank at .
Photos #s (30 meters) Upstream____ Downstream____ Left Bank ____ Right Bank____
Photos #s (150 meters) Upstream____ Downstream____ Left Bank ____ Right Bank____
Photos #s (300 meters) Upstream____ Downstream____ Left Bank ____ Right Bank____

# Measurements	Width (meters)
1	
2	
3	
4	
5	
6	
7	
8	
9	
10	

Field Data Sheets – Basic RUAA Survey

Stream Name Caney Creek above tidal Site: 8
Date: 05/14/10 Time: 1107

F. Additional RUAA Information

1. Check the following activities observed over the site reach.

- ☐ Drinking or water in mouth
- ☐ Bathing
- ☐ Walking
- ☐ Jogging/running
- ☐ Bicycling
- ☐ Standing
- ☐ Sitting
- ☐ Lying down/sleeping
- ☐ Playing on shoreline
- ☐ Picnicking
- ☐ Motorcycle/ATV
- ☐ Hunting/Trapping
- ☐ Wildlife watching
- ☒ None
- ☐ Other: _____

2. Are there permanent or long-term hydrologic modifications that are constructed and operated in a way that affects the recreational uses? ☒ Yes ☐ No (If yes, please provide supporting documentation and photos.)
Comments: bridge

3. Check any channel obstructions that apply (Attach photos).

- ☒ Culverts
- ☒ Fences
- ☐ Log jams
- ☐ Rip rap
- ☐ Water control structure
- ☐ Barbed wire
- ☐ Dams
- ☐ Thick vegetation
- ☐ Low bridges
- ☐ None
- ☐ Utility pipe
- ☐ Other (specify): _____

4. Check all surrounding conditions that promote recreational activities (Attach photos of evidence or unusual items of interest).

- ☐ Campgrounds
- ☐ Playgrounds
- ☒ Rural area
- ☒ Residential
- ☐ National forests
- ☐ Urban/suburban location
- ☐ Golf Course
- ☐ Sports Field
- ☐ Stairs/walkway
- ☐ Boating access (ramps)
- ☐ Beach
- ☒ Bridge crossing
- ☐ Commercial boating
- ☐ Trails/paths (hiking/biking)
- ☐ Paved parking lot
- ☐ Unimproved parking lot
- ☒ Roads (paved/unpaved)
- ☒ Populated area
- ☐ Docks or rafts
- ☐ Commercial outfitter
- ☐ Nearby school
- ☐ Power Line Corridor
- ☐ Parks (national/city/county/state)
- ☐ Public Property
- ☐ Other: _____
- ☐ None of the Above

Comments: _____

5. Check all surrounding conditions that impede recreational activities (Attach photos of evidence or unusual items of interest).

- ☒ Private Property
- ☐ No trespass sign
- ☐ Wildlife
- ☐ Steep slopes
- ☐ No public access
- ☐ No roads
- ☒ Fence
- ☐ Barge/ship traffic
- ☐ Industrial
- ☐ None of the Above
- ☐ Other: _____

Comments: _____

6. Check any indications of human use (Attach photos).

- ☒ Roads
- ☐ Rope swings
- ☐ Dock/platform
- ☐ Foot paths/prints
- ☐ Other: _____
- ☐ RV/ATV Tracks
- ☐ Camping Sites
- ☐ Fire pit/ring
- ☐ Fishing Tackle
- ☐ NPDES Discharge
- ☐ Gates on corridor
- ☐ Children's toys
- ☐ Remnant's of Kid's play
- ☐ Organized event
- ☒ No Human Presence

Comments: _____

Field Data Sheets – Basic RUAA Survey

Stream Name Caney Creek above tidal Site: 8
Date: 5/14/10 Time: 1107

7. Check all water characteristics that apply (Attach photos).
Aquatic Vegetation: _ absent _ rare _ common X abundant
Algae Cover: X absent _ rare _ common _ abundant
Odor: X none _ rare _ common _ abundant
Color: _ clear _ green _ red _ brown _ black N/A
Bottom Deposit: _ sludge _ solids _ fine sediments _ none X other dry & packed bottom
Water Surface: _ clear _ scum _ foam _ debris _ oil N/A
Other: Dry

8. Vertebrates Observed within 300 meter reach

Snakes	X None	_ slight presence	_ moderate presence	_ large presence
Water Dependent Birds	X None	_ slight presence	_ moderate presence	_ large presence
Alligators	X None	_ slight presence	_ moderate presence	_ large presence

Comments: _____

9. Mammals Observed within 300 meter reach

Wild	X None	_ slight presence	_ moderate presence	_ large presence
Domesticated Pets	X None	_ slight presence	_ moderate presence	_ large presence
Livestock	X None	_ slight presence	_ moderate presence	_ large presence
Feral Hogs	X None	_ slight presence	_ moderate presence	_ large presence

Comments: _____

10. Evidence of wild animals or evidence of birds, cattle, hogs, etc.
_ Tracks _ Fecal droppings _ Bird nests N/A

11. Garbage Observed
Large garbage in the channel X None _ Rare _ Common _ Abundant
Small garbage in the channel X None _ Rare _ Common _ Abundant
Bank Garbage _ None X Rare _ Common _ Abundant
Briefly describe the kinds of garbage observed: beer cans near side of road on bank

12. Is the site located in a wildlife preserve with large wildlife (i.e waterfowl) population? _ Yes X No

13. Please document any other relevant information regarding recreational activities and the water body in general (for example, area outside of the stream reach evaluated).
N/A

Field Data Sheet - Basic RUAA Survey
Stream Flow (Discharge) Measurement

Stream: Caney Creek above tidal Date: 5/14/10
Site: 8 Site
Description: FM 442 @ Caney Creek
Time Begin: 1107 Time End: _____ Meter Type: Sontek Flowtracker
Observers: _____ Stream Width*: _____ Section Width (W): _____
Observations: _____

Section Midpoint (ft) (m)	Section Depth (ft) (m) (cm) (D)	Observational Depth** (ft)(m)	Velocity (V)		Flow (Q) (m^3/s) (ft^3/s) Q = (W)(D)(V)
			At Point (ft/s)(m/s)	Average (ft/s)(m/s)	

No measurement taken

9

Site 9

Field Data Sheets – Basic RUAA Survey

(should be completed for each site)

Data Collectors & Contact Information:	D. Ramirez, M. Shepard, C. Green, S. Curtis
Date & Time: 5-14-10 1133 – 1219	County Name: Wharton
Stream Name:	Caney Creek above tidal
Segment No. or nearest downstream Segment No.:	1305
Description of Site:	N Sinclair St @ Caney Creek

At any point during the Basic RUAA Survey it becomes apparent that primary contact recreation is clearly the use for the water body the investigator should stop conducting the UAA.

A. Stream Characteristics:

1. Check the following channel flow status that applies.
☐ dry ☐ no flow ☐ low ☒ normal ☐ high ☐ flooded

2. Check the following stream type that applies on the day of the survey:
☐ Ephemeral: A stream which flows only during or immediately after a rainfall event, and contains no refuge pools capable of sustaining a viable community of aquatic organisms.
☐ Intermittent: A stream which has a period of zero flow for at least one week during most years. Where flow records are available, a stream with a 7Q2 flow of less than 0.1 cubic feet per second is considered intermittent.
☐ Intermittent w/ perennial pools: An intermittent stream which maintains persistent pools even when flow in the stream is less than 0.1 cubic feet per second.
☒ Perennial: A stream which flows continuously throughout the year. Perennial streams have a 7Q2 equal to or greater than 0.1 cubic feet per second.
☐ Designated or unclassified tidal stream: A stream that is tidally influenced. If you checked this box, you will need to contact the Water Quality Standards Group and evaluate whether or not a bathing beach is located along the tidal stream and whether or not a bathing beach is located along the estuary, bay or Gulf water that the tidal stream flows into.

3. Streamflow
Use USGS gage data (if a gage is located at a site or within a quarter mile of a site) or use the Stream Flow (Discharge) Measurement Form and follow the procedures outlined in the most recent TCEQ Surface Water Quality Monitoring Procedures, Volume 1, RG-415. If USGS gage data is used for a site, include that information as an attachment and list the streamflow on the sampling date below. If the stream flow taken at one site is representative of the flow at another site(s), then that flow can be used as the observed flow and should be documented below. If the stream flow measured at one site is different from another site, then stream flow should be taken at both sites. -0.622 cfs

4. Water Quality Data (Field Parameters)
Field parameters should be collected in accordance with the procedures outlined in the most recent TCEQ Surface Water Quality Monitoring Procedures, Volume 1.
Air Temp 32 °C Water Temp 24.5 °C Secchi 0.062 m

5. Riparian Zone (Mark dominant categories with L (Left Bank) and R (Right Bank). Bank orientation is determined by the investigator facing downstream.)

____ Forest	R Urban (residential)	____ Rip rap
____ Shrub dominated corridor	L Pasture	____ Concrete
____ Herbaceous marsh	____ Row crops	Other (specify): ____
R/L Mowed/maintained corridor	____ Denuded/Eroded bank	

6. Ease of bank access to the water body: ☒ Easy ☐ Moderately easy ☐ Moderately difficult ☐ Difficult

7. Please describe access opportunities or explain why the site is not easily accessible (Attach photos for documentation): thick vegetation on slope to water, top of bank clean, fence across down

8. Dominant Primary Substrate
☐ Cobble ☐ Sand ☒ Silt ☐ Mud/Clay ☐ Gravel ☐ Bedrock ☐ Rip rap ☐ Concrete

QC PL E MES Q2 DAP

Field Data Sheets – Basic RUAA Survey

Stream Name: Caney Creek above tidal Site: 9
Date: 5/14/10 Time: 1133

B. Primary Contact Water Recreation Evaluation:
- Primary contact recreation draft definition: Water recreation activities, such as wading by children, swimming, water skiing, diving, tubing, surfing, and whitewater kayaking, canoeing, and rafting, involving a significant risk of ingestion of water.

1. Were water recreation activities that involve a significant risk of ingestion (full body immersion) observed at this site?
☐ Yes ☒ No primary contact recreation activities were observed
a. Check the following boxes of primary contact recreation activities observed at the time of the sampling event at the site (Attach photos of the activities or lack of activities).

☐ Wading-Children	☐ Tubing	☒ No primary contact activities that commonly occur were observed
☐ Wading-Adults	☐ Surfing	
☐ Swimming	☐ Whitewater-kayaking, canoeing, rafting	
☐ Water skiing	☐ Other: _____	
☐ Diving	☐ frequent public swimming-created by publicly owned land or commercial operations	

b. Check the number of individuals observed at the site: ☒ None ☐ 1-10 ☐ 11-20 ☐ 20-50 ☐ greater than 50

c. Check the following that apply regarding the individuals proximity to the water body.
☐ Water in mouth or nose of the individual ☐ Primary touch: Individual's body (or portion) immersed in water
☐ Secondary touch: fishing, pets and related contact with water ☐ Individual is in a boat touching water
☐ Individual is on shore near water within 8 meters (25ft) of water ☐ Individual is well away from water between 8 and 30 meters (100 ft) ☒ Not applicable

2. If primary contact recreation activities are not observed, describe the physical characteristics of the water body that may hinder the frequency of primary contact (depth, etc.) (Attach photos, etc. for documentation). thick aquatic/emergent vegetation, boggy bottom (sink to calf's), lots of debris (sticks, etc) and channel/ - heavy duck weed cover

3. Describe if there is public access (e.g. parks, roads, etc.) (Attach photos, maps, etc. for documentation).
located at school, can park in lot

4. Is an area with primary contact recreation activities or a bathing beach (e.g. state/local parks with swimming, etc.) located near (e.g. within 5 miles upstream and downstream) this site? No

C. Secondary Contact Water Recreation Evaluation:
- Secondary contact recreation 1: Water recreation activities, such as fishing, commercial and recreational boating, and limited body contact incidental to shoreline activity, not involving a significant risk of water ingestion and that commonly occur.
- Secondary contact recreation 2: Water recreation activities, such as fishing, commercial and recreational boating, and limited body contact incidental to shoreline activity, not involving a significant risk of water ingestion but that occur less frequently than for secondary contact recreation 1 due to (1) physical characteristics of the water body and/or (2) limited public access.

1. Were water recreation activities observed at the site, but the nature of the recreation does not involve a significant risk of ingestion (e.g. secondary contact recreation activities)? ☐ Yes ☒ No secondary contact recreation activities were observed
a. Check the following boxes of secondary contact recreation activities that were observed at the time of the sampling event at the site (Attach photos of activities or lack of activities).
☐ Fishing
☐ Boating-commercial, recreational
☐ Non-whitewater-kayaking, rafting, canoeing
☒ No secondary contact recreation activities were observed
☐ Other secondary contact activities: _____

Field Data Sheets – Basic RUAA Survey

Stream Name Caney Creek above tidal Site: 9
Date: 5/14/10 Time: 1133

b. Check the number of individuals observed at the site.
☒ None ☐ 1-10 ☐ 11-20 ☐ 20-50 ☐ greater than 50

c. Check the following that apply regarding the individuals proximity to the water body.
☐ Secondary touch: fishing, pets and related contact with water ☐ In a boat touching water
☐ Body on shore near water within 8 meters (25ft) of water ☐ Body well away from water between 8 and 30 meters (100 ft) ☒ N/A

2. If secondary contact recreation activities are not observed, describe the physical characteristics of the water body that may hinder the frequency of secondary contact (Attach photos, etc. for documentation).

same as before & somewhat shallow

3. If secondary contact recreation activities are observed, how often do water recreational activities occur that do not involve a significant risk of water ingestion? ☐ frequently ☐ infrequently N/A
Please describe how often the activities occur? ☐ Unknown ☐ Never ☐ Daily ☐ Monthly ☐ Yearly

4. If infrequently, what is the reason? ☐ physical characteristics of the water body ☐ limited public access ☐ other
If other, list reasons: N/A

5. Describe the physical characteristics of the water body that hinders the frequency of secondary contact recreation (depth, etc.) (Attach photos or depth measurements, etc. for documentation).

same as above

6. Describe why there is limited public access (e.g. lack of roads, river or stream banks overgrown, etc.) (Attach photos, maps, etc. for documentation).

same as before

D. Noncontact Recreation Evaluation

Noncontact recreation applies to water bodies where recreation activities do not involve a significant risk of water ingestion, and where primary and secondary contact recreation uses do not occur because of unsafe conditions, such as barge traffic.

1. Provide site-specific information and documentation (including photographs) regarding unsafe conditions, recreation activities, and presence or absence of water recreation activities.

Field Data Sheets – Basic RUAA Survey

Stream Name Caney Creek above Tidal Site: 9
Date: 5/14/10 ~~FDS Page 3 of 8~~ Time: 1133

E. Stream Channel and Substantial Pools
Please check the following which best describes the river or stream: ☒ Wadeable ☐ Non-wadeable

1. Wadeable Streams
Determine whether or not the average depth at the thalweg is greater than 0.5 meters and if there are substantial pools with a depth of 1 meter or greater. Walk an approximately 300 meter reach (total) at the site and take the following measurements within the 300 meter reach. Measurements should be taken during base flow conditions (sustained or typical dry, warm-weather flows between rainfall events, excluding unusual antecedent conditions of drought or wet weather

Also, take photos facing upstream, downstream, left bank, and right bank at the 30 meters, 150 meters, and 300 meters.
Photos #s (30 meters) Upstream ✓ Downstream ✓ Left Bank ✓ Right Bank ✓
Photos #s (150 meters) Upstream ✓ Downstream ✓ Left Bank ✓ Right Bank ✓
Photos #s (300 meters) Upstream ✓ Downstream ✓ Left Bank ✓ Right Bank ✓

a) Substantial pools - Measure the length of each pool (if > 10 pools only measure 10 pools), the width (at the widest point), and the deepest depth. A substantial pool is considered a pool greater than 10 meters in length for the purposes of a Basic RUAA Survey. If depth and/or width measurements were not attainable, explain why.

	Length (meters)	Width (meters)	Depth (meters)
Pool 1			
Pool 2			
Pool 3			
Pool 4			
Pool 5			
Pool 6			
Pool 7			
Pool 8			
Pool 9			
Pool 10			

b)Average depth at the thalweg –Take depth measurements approximately every 30 meters to calculate an average depth at the thalweg (at least 10 measurements needed). If depth and/or width measurements were not attainable, explain why.

Distance	(ft) Depth	(meters)
30 meters	1.3	0.396
60 meters	1.3	0.396
90 meters	1.5	0.457
120 meters	1.2	0.366
150 meters	1.4	0.427
180 meters	1.2	0.366
210 meters	1.3	0.396
240 meters	1.0	0.305
270 meters	1.1	0.335
300 meters	1.3	0.396
Average		0.384

Field Data Sheets – Basic RUAA Survey

Stream Name Caney Creek (1305) Site: 9
Date: 5/14/10 Time: 1133

c) Stream width - Measure (1) the width at one point which represents the typical average width of the 300 meter reach; (2) the width at the narrowest point of the stream within the 300 meter reach; and (3) the width at the widest point of the stream within the 300 meter reach.

Measurement Type	(ft) Width	(meters)
Typical Average Width of 300 meter reach	25	7.62
Width at narrowest point of the stream within 300 meter reach	22	6.70
Width at the widest point of the stream within 300 meter reach	29	8.83

d) Is there sufficient water within a 300 meter stream reach during base flow conditions to support primary contact recreation? ☒ Yes ☐ No
COMMENTS: children ~~wading~~ wadeable, though bottom not conducive for recreating

2. Non-wadeable Streams NA
If accessible, take 10 width measurements which represent typical widths of the 300 meter reach. If the water is too deep and not accessible record the estimated average width of the water body.

Also, take photos facing upstream, downstream, left bank, and right bank at .
Photos #s (30 meters) Upstream____ Downstream____ Left Bank ____ Right Bank____
Photos #s (150 meters) Upstream____ Downstream____ Left Bank ____ Right Bank____
Photos #s (300 meters) Upstream____ Downstream____ Left Bank ____ Right Bank____

# Measurements	Width (meters)
1	
2	
3	
4	
5	
6	
7	
8	
9	
10	

Field Data Sheets – Basic RUAA Survey

Stream Name Caney Creek above tidal Site: 9
Date: 5/14/10 Time: 1133

F. Additional RUAA Information

1. Check the following activities observed over the site reach.

- ☐ Drinking or water in mouth
- ☐ Bathing
- ☐ Walking
- ☐ Jogging/running
- ☐ Bicycling
- ☐ Standing
- ☐ Sitting
- ☐ Lying down/sleeping
- ☐ Playing on shoreline
- ☐ Picnicking
- ☐ Motorcycle/ATV
- ☐ Hunting/Trapping
- ☐ Wildlife watching
- ☒ None
- ☐ Other: _____

2. Are there permanent or long-term hydrologic modifications that are constructed and operated in a way that affects the recreational uses? ☐ Yes ☒ No (If yes, please provide supporting documentation and photos.)
Comments: _____

3. Check any channel obstructions that apply (Attach photos).

- ☐ Culverts
- ☒ Fences
- ☐ Log jams
- ☐ Rip rap
- ☐ Water control structure
- ☐ Barbed wire
- ☐ Dams
- ☒ Thick vegetation
- ☐ Low bridges
- ☐ None
- ☐ Utility pipe
- ☐ Other (specify): _____

4. Check all surrounding conditions that promote recreational activities (Attach photos of evidence or unusual items of interest).

- ☐ Campgrounds
- ☐ Playgrounds
- ☐ Rural area
- ☒ Residential
- ☐ National forests
- ☐ Urban/suburban location
- ☐ Golf Course
- ☐ Sports Field
- ☐ Stairs/walkway
- ☐ Boating access (ramps)
- ☐ Beach
- ☐ Bridge crossing
- ☐ Commercial boating
- ☐ Trails/paths (hiking/biking)
- ☐ Paved parking lot
- ☒ Unimproved parking lot
- ☒ Roads (paved/unpaved)
- ☐ Populated area
- ☐ Docks or rafts
- ☐ Commercial outfitter
- ☒ Nearby school
- ☐ Power Line Corridor
- ☐ Parks (national/city/county/state)
- ☐ Public Property
- ☐ Other: _____
- ☐ None of the Above

Comments: _____

5. Check all surrounding conditions that impede recreational activities (Attach photos of evidence or unusual items of interest).

- ☒ Private Property
- ☐ No trespass sign
- ☐ Wildlife
- ☐ Steep slopes
- ☐ No public access
- ☐ No roads
- ☒ Fence
- ☐ Barge/ship traffic
- ☐ Industrial
- ☐ None of the Above
- ☐ Other: _____

Comments: _____

6. Check any indications of human use (Attach photos).

- ☐ Roads
- ☐ Rope swings
- ☐ Dock/platform
- ☐ Foot paths/prints
- ☐ RV/ATV Tracks
- ☐ Camping Sites
- ☐ Fire pit/ring
- ☐ Fishing Tackle
- ☐ NPDES Discharge
- ☐ Gates on corridor
- ☐ Children's toys
- ☐ Remnant's of Kid's play
- ☐ Organized event
- ☒ No Human Presence
- ☒ Other: _____

Comments: school nearby has athletic field(s)

Field Data Sheets – Basic RUAA Survey

Stream Name Caney Creek above tidal Site: 9
Date: 5/14/10 Time: 1133

7. Check all water characteristics that apply (Attach photos).

Aquatic Vegetation: ☐ absent ☐ rare ☐ common ☒ abundant - ~~hydrocotyle~~ hyacinth & duck weed
Algae Cover: ☒ absent ☐ rare ☐ common ☐ abundant
Odor: ☐ none ☐ rare ☒ common ☐ abundant
Color: ☒ clear ☐ green ☐ red ☐ brown ☐ black
Bottom Deposit: ☒ sludge ☐ solids ☒ fine sediments ☐ none ☐ other
Water Surface: ☐ clear ☐ scum ☐ foam ☒ debris ☐ oil
Other: ↳ & vegetation

8. Vertebrates Observed within 300 meter reach

Snakes	☒ None	☐ slight presence	☐ moderate presence	☐ large presence
Water Dependent Birds	☐ None	☒ slight presence	☐ moderate presence	☐ large presence (3)
Alligators	☒ None	☐ slight presence	☐ moderate presence	☐ large presence

Comments:

9. Mammals Observed within 300 meter reach

Wild	☒ None	☐ slight presence	☐ moderate presence	☐ large presence
Domesticated Pets	☒ None	☐ slight presence	☐ moderate presence	☐ large presence
Livestock	☒ None	☐ slight presence	☒ moderate presence	☐ large presence
Feral Hogs	☒ None	☐ slight presence	☐ moderate presence	☐ large presence

some chickens & goats

Comments:

10. Evidence of wild animals or evidence of birds, cattle, hogs, etc.
☐ Tracks ☐ Fecal droppings ☐ Bird nests ☒ None

11. Garbage Observed

Large garbage in the channel	☐ None	☐ Rare	☒ Common	☐ Abundant
Small garbage in the channel	☐ None	☒ Rare	☐ Common	☐ Abundant
Bank Garbage	☐ None	☒ Rare	☐ Common	☐ Abundant

Briefly describe the kinds of garbage observed: chair, telephone pole, tires, tennis balls, food wrappers

12. Is the site located in a wildlife preserve with large wildlife (i.e waterfowl) population? ☐ Yes ☒ No

13. Please document any other relevant information regarding recreational activities and the water body in general (for example, area outside of the stream reach evaluated).

Field Data Sheet - Basic RUAA Survey
Stream Flow (Discharge) Measurement

Stream: Carney creek above tidal Date: 5/14/10
Site: 9 Site
Description: N Sinclair St @ Carney Creek
Time Begin: 1150 Time End: 1217 Meter Type: Sontek Flowtracker
Observers: M. Shepard, D. Ramirez Stream Width*: 28 Section Width (W): 2.8
Observations: lots of debris & duck weed, boggy bottom

	Section Midpoint (ft)(m)	Section Depth (ft)(m) (cm) (D)	Observational Depth** (ft)(m)	Velocity (V) At Point (ft/s)(m/s)	Velocity (V) Average (ft/s)(m/s)	Flow (Q) (m^3/s)(ft^3/s) Q = (W)(D)(V)
1	1.4	0.5			0.02	0.028
2	4.2	1.1			0.00	0.000
3	7.0	1.3			-0.04	-0.146
4	9.8	1.2			-0.07	-0.235
5	12.6	1.3			-0.03	-0.109
6	15.4	1.3			-0.00	0.000
7	18.2	1.3			-0.04	-0.146
8	21.0	1.3			-0.01	-0.036
9	23.8	0.9			-0.00	0.000
10	26.6	0.8			0.01	0.022

- sinking to knee/thigh mid-channel

KC 10/28/10

Total Q = ~~-0.655~~ cfs
-0.622

E MES

Field Data Sheets – Basic RUAA Survey

Stream Name Caney Creek above tidal Site: 9
Date: 6/14/10 ~~FDS Page 3 of 8~~ Time: 1133

E. Stream Channel and Substantial Pools
Please check the following which best describes the river or stream: ✓ Wadeable ☐ Non-wadeable

1. Wadeable Streams
Determine whether or not the average depth at the thalweg is greater than 0.5 meters and if there are substantial pools with a depth of 1 meter or greater. Walk an approximately 300 meter reach (total) at the site and take the following measurements within the 300 meter reach. Measurements should be taken during base flow conditions (sustained or typical dry, warm-weather flows between rainfall events, excluding unusual antecedent conditions of drought or wet weather

Also, take photos facing upstream, downstream, left bank, and right bank at the 30 meters, 150 meters, and 300 meters.
Photos #s (30 meters) Upstream ✓ Downstream ✓ Left Bank ✓ Right Bank ✓
Photos #s (150 meters) Upstream ✓ Downstream ✓ Left Bank ✓ Right Bank ✓
Photos #s (300 meters) Upstream ✓ Downstream ✓ Left Bank ✓ Right Bank ✓

a) Substantial pools - Measure the length of each pool (if > 10 pools only measure 10 pools), the width (at the widest point), and the deepest depth. A substantial pool is considered a pool greater than 10 meters in length for the purposes of a Basic RUAA Survey. If depth and/or width measurements were not attainable, explain why.

	Length (meters)	Width (meters)	Depth (meters)
Pool 1			
Pool 2			
Pool 3			
Pool 4			
Pool 5			
Pool 6			
Pool 7			
Pool 8			
Pool 9			
Pool 10			

b)Average depth at the thalweg –Take depth measurements approximately every 30 meters to calculate an average depth at the thalweg (at least 10 measurements needed). If depth and/or width measurements were not attainable, explain why.

Distance	Depth (meters)
30 meters	13 inches (0.33m)
60 meters	13 inches (0.33m)
90 meters	15 inches (0.381m)
120 meters	12 inches (0.30 m)
150 meters	14 inches (0.353m)
180 meters	12 inches (0.30m)
210 meters	13 inches (0.33m)
240 meters	10 inches (0.253m)
270 meters	11 inches (0.916m) SPL (0.279m)
300 meters	13 inches (0.33m)
Average	(0.3186m)

Field Data Sheets – Basic RUAA Survey

Stream Name Caney Creek above tidal Site: 9
Date: 5/14/10 Time: 1133

c) Stream width - Measure (1) the width at one point which represents the typical average width of the 300 meter reach; (2) the width at the narrowest point of the stream within the 300 meter reach; and (3) the width at the widest point of the stream within the 300 meter reach.

Measurement Type	Width (meters)
Typical Average Width of 300 meter reach	[redacted] 25ft (7.62m)
Width at narrowest point of the stream within 300 meter reach	22ft (6.70m)
Width at the widest point of the stream within 300 meter reach	29ft (8.83m)

d) Is there sufficient water within a 300 meter stream reach during base flow conditions to support primary contact recreation? [redacted] Yes [redacted] No
COMMENTS:

2. Non-wadeable Streams N/A
If accessible, take 10 width measurements which represent typical widths of the 300 meter reach. If the water is too deep and not accessible record the estimated average width of the water body.

Also, take photos facing upstream, downstream, left bank, and right bank at .
Photos #s (30 meters) Upstream____ Downstream____ Left Bank ____ Right Bank____
Photos #s (150 meters) Upstream____ Downstream____ Left Bank ____ Right Bank____
Photos #s (300 meters) Upstream____ Downstream____ Left Bank ____ Right Bank____

# Measurements	Width (meters)
1	
2	
3	
4	
5	
6	
7	
8	
9	
10	

Site 10

Field Data Sheets – Basic RUAA Survey

(should be completed for each site)

Data Collectors & Contact Information:	M. Shepard, D. Ramirez, S. Curtis, C. Green
Date & Time: 5/14/10 1234-1238	County Name: Wharton
Stream Name: Caney Creek above tidal	
Segment No. or nearest downstream Segment No.: 1305	
Description of Site: FM 1301 @ Caney Creek	

At any point during the Basic RUAA Survey it becomes apparent that primary contact recreation is clearly the use for the water body the investigator should stop conducting the UAA.

A. Stream Characteristics:

1. Check the following channel flow status that applies.

X dry ☐ no flow ☐ low ☐ normal ☐ high ☐ flooded

2. Check the following stream type that applies on the day of the survey:

X Ephemeral: A stream which flows only during or immediately after a rainfall event, and contains no refuge pools capable of sustaining a viable community of aquatic organisms.

MES ☐ Intermittent: A stream which has a period of zero flow for at least one week during most years. Where flow records are available, a stream with a 7Q2 flow of less than 0.1 cubic feet per second is considered intermittent.

☐ Intermittent w/ perennial pools: An intermittent stream which maintains persistent pools even when flow in the stream is less than 0.1 cubic feet per second.

☐ Perennial: A stream which flows continuously throughout the year. Perennial streams have a 7Q2 equal to or greater than 0.1 cubic feet per second.

☐ Designated or unclassified tidal stream: A stream that is tidally influenced. If you checked this box, you will need to contact the Water Quality Standards Group and evaluate whether or not a bathing beach is located along the tidal stream and whether or not a bathing beach is located along the estuary, bay or Gulf water that the tidal stream flows into.

3. Streamflow N/A

Use USGS gage data (if a gage is located at a site or within a quarter mile of a site) or use the Stream Flow (Discharge) Measurement Form and follow the procedures outlined in the most recent TCEQ Surface Water Quality Monitoring Procedures, Volume 1, RG-415. If USGS gage data is used for a site, include that information as an attachment and list the streamflow on the sampling date below. If the stream flow taken at one site is representative of the flow at another site(s), then that flow can be used as the observed flow and should be documented below. If the stream flow measured at one site is different from another site, then stream flow should be taken at both sites. ~~0.050~~ cfs MES

4. Water Quality Data (Field Parameters) No water

Field parameters should be collected in accordance with the procedures outlined in the most recent TCEQ Surface Water Quality Monitoring Procedures, Volume 1.

Air Temp 33 °C Water Temp ___ °C Secchi ___ m

5. Riparian Zone (Mark dominant categories with L (Left Bank) and R (Right Bank). Bank orientation is determined by the investigator facing downstream.)

___	Forest		Urban	___	Rip rap
___	Shrub dominated corridor	R, L	Pasture	___	Concrete
___	Herbaceous marsh	___	Row crops	Other (specify):	
___	Mowed/maintained corridor	___	Denuded/Eroded bank		

6. Ease of bank access to the water body: ☐ Easy X Moderately easy ☐ Moderately difficult ☐ Difficult

7. Please describe access opportunities or explain why the site is not easily accessible (Attach photos for documentation): relatively steep slopes, moderate vegetation on banks, fences across up & down

8. Dominant Primary Substrate

☐Cobble ☐Sand ☐Silt X Mud/Clay ☐Gravel ☐Bedrock ☐Rip rap ☐ Concrete

QPL E MES

Field Data Sheets – Basic RUAA Survey

Stream Name Caney Creek above tidal Site: 10
Date: 5/14/10 Time: 1234

B. Primary Contact Water Recreation Evaluation:
- Primary contact recreation draft definition: Water recreation activities, such as wading by children, swimming, water skiing, diving, tubing, surfing, and whitewater kayaking, canoeing, and rafting, involving a significant risk of ingestion of water.

1. Were water recreation activities that involve a significant risk of ingestion (full body immersion) observed at this site?
☐ Yes ☒ No primary contact recreation activities were observed
a. Check the following boxes of primary contact recreation activities observed at the time of the sampling event at the site (Attach photos of the activities or lack of activities).

☐ Wading-Children	☐ Tubing	☒ No primary contact activities that commonly occur were observed
☐ Wading-Adults	☐ Surfing	
☐ Swimming	☐ Whitewater-kayaking, canoeing, rafting	
☐ Water skiing	☐ Other: _____	
☐ Diving	☐ frequent public swimming-created by publicly owned land or commercial operations	

b. Check the number of individuals observed at the site: ☒ None ☐ 1-10 ☐ 11-20 ☐ 20-50 ☐ greater than 50

c. Check the following that apply regarding the individuals proximity to the water body.
☐ Water in mouth or nose of the individual ☐ Primary touch: Individual's body (or portion) immersed in water
☐ Secondary touch: fishing, pets and related contact with water ☐ Individual is in a boat touching water
☐ Individual is on shore near water within 8 meters (25ft) of water ☐ Individual is well away from water between 8 and 30 meters (100 ft) ☒ Not applicable

2. If primary contact recreation activities are not observed, describe the physical characteristics of the water body that may hinder the frequency of primary contact (depth, etc.) (Attach photos, etc. for documentation).
No water; heavy debris, vegetation, & trash in channel

3. Describe if there is public access (e.g. parks, roads, etc.) (Attach photos, maps, etc. for documentation).
no public parking, pull off road - little shoulder, private property surrounding bridge crossing

4. Is an area with primary contact recreation activities or a bathing beach (e.g. state/local parks with swimming, etc.) located near (e.g. within 5 miles upstream and downstream) this site? No

C. Secondary Contact Water Recreation Evaluation:
- Secondary contact recreation 1: Water recreation activities, such as fishing, commercial and recreational boating, and limited body contact incidental to shoreline activity, not involving a significant risk of water ingestion and that commonly occur.
- Secondary contact recreation 2: Water recreation activities, such as fishing, commercial and recreational boating, and limited body contact incidental to shoreline activity, not involving a significant risk of water ingestion but that occur less frequently than for secondary contact recreation 1 due to (1) physical characteristics of the water body and/or (2) limited public access.

1. Were water recreation activities observed at the site, but the nature of the recreation does not involve a significant risk of ingestion (e.g. secondary contact recreation activities)? ☐ Yes ☒ No secondary contact recreation activities were observed
a. Check the following boxes of secondary contact recreation activities that were observed at the time of the sampling event at the site (Attach photos of activities or lack of activities).
☐ Fishing
☐ Boating-commercial, recreational
☐ Non-whitewater-kayaking, rafting, canoeing
☒ No secondary contact recreation activities were observed
☐ Other secondary contact activities: _____

Field Data Sheets – Basic RUAA Survey

Stream Name Caney Creek above tidal Site: 10
Date: 5/14/10 Time: 1234

b. Check the number of individuals observed at the site.
X None ☐ 1-10 ☐ 11-20 ☐ 20-50 ☐ greater than 50

c. Check the following that apply regarding the individuals proximity to the water body.
☐ Secondary touch: fishing, pets and related contact with water ☐ In a boat touching water
☐ Body on shore near water within 8 meters (25ft) of water ☐ Body well away from water between 8 and 30 meters (100 ft) ☒ N/A

2. If secondary contact recreation activities are not observed, describe the physical characteristics of the water body that may hinder the frequency of secondary contact (Attach photos, etc. for documentation).

same as before

3. If secondary contact recreation activities are observed, how often do water recreational activities occur that do not involve a significant risk of water ingestion? ☐ frequently ☐ infrequently N/A
Please describe how often the activities occur? ☐ Unknown ☐ Never ☐ Daily ☐ Monthly ☐ Yearly

4. If infrequently, what is the reason? ☐ physical characteristics of the water body ☐ limited public access ☐ other
If other, list reasons: N/A

5. Describe the physical characteristics of the water body that hinders the frequency of secondary contact recreation (depth, etc.) (Attach photos or depth measurements, etc. for documentation).

same as before

6. Describe why there is limited public access (e.g. lack of roads, river or stream banks overgrown, etc.) (Attach photos, maps, etc. for documentation).

same as before

D. Noncontact Recreation Evaluation

Noncontact recreation applies to water bodies where recreation activities do not involve a significant risk of water ingestion, and where primary and secondary contact recreation uses do not occur because of unsafe conditions, such as barge traffic.

1. Provide site-specific information and documentation (including photographs) regarding unsafe conditions, recreation activities, and presence or absence of water recreation activities.

Field Data Sheets – Basic RUAA Survey

Stream Name Caney Creek above tidal Site: 10
Date: 5/14/10 ~~FDS Page 3 of 8~~ Time: 1234

E. Stream Channel and Substantial Pools
Please check the following which best describes the river or stream: ☐ Wadeable ☐ Non-wadeable N/A

1. Wadeable Streams
Determine whether or not the average depth at the thalweg is greater than 0.5 meters and if there are substantial pools with a depth of 1 meter or greater. Walk an approximately 300 meter reach (total) at the site and take the following measurements within the 300 meter reach. Measurements should be taken during base flow conditions (sustained or typical dry, warm-weather flows between rainfall events, excluding unusual antecedent conditions of drought or wet weather

Also, take photos facing upstream, downstream, left bank, and right bank at the 30 meters, 150 meters, and 300 meters.
Photos #s (30 meters) Upstream ✓ Downstream ✓ Left Bank ✓ Right Bank ✓ - only at bridge
Photos #s (150 meters) Upstream____ Downstream____ Left Bank ____ Right Bank____ NO WATER
Photos #s (300 meters) Upstream____ Downstream____ Left Bank ____ Right Bank____

a) Substantial pools - Measure the length of each pool (if > 10 pools only measure 10 pools), the width (at the widest point), and the deepest depth. A substantial pool is considered a pool greater than 10 meters in length for the purposes of a Basic RUAA Survey. If depth and/or width measurements were not attainable, explain why.

	Length (meters)	Width (meters)	Depth (meters)
Pool 1			
Pool 2			
Pool 3			
Pool 4			
Pool 5			
Pool 6			
Pool 7			
Pool 8			
Pool 9			
Pool 10			

b)Average depth at the thalweg –Take depth measurements approximately every 30 meters to calculate an average depth at the thalweg (at least 10 measurements needed). If depth and/or width measurements were not attainable, explain why.

Distance	Depth (meters)
30 meters	
60 meters	
90 meters	
120 meters	
150 meters	
180 meters	
210 meters	
240 meters	
270 meters	
300 meters	
Average	

Field Data Sheets – Basic RUAA Survey

Stream Name Caney Creek above tidal Site: 10
Date: 5/14/10 Time: 1234

c) Stream width - Measure (1) the width at one point which represents the typical average width of the 300 meter reach; (2) the width at the narrowest point of the stream within the 300 meter reach; and (3) the width at the widest point of the stream within the 300 meter reach.

Measurement Type	Width (meters)
Typical Average Width of 300 meter reach	
Width at narrowest point of the stream within 300 meter reach	
Width at the widest point of the stream within 300 meter reach	

d) Is there sufficient water within a 300 meter stream reach during base flow conditions to support primary contact recreation? ☐ Yes ☑ No
COMMENTS:

2. Non-wadeable Streams
If accessible, take 10 width measurements which represent typical widths of the 300 meter reach. If the water is too deep and not accessible record the estimated average width of the water body.

Also, take photos facing upstream, downstream, left bank, and right bank at .
Photos #s (30 meters) Upstream____ Downstream____ Left Bank ____ Right Bank____
Photos #s (150 meters) Upstream____ Downstream____ Left Bank ____ Right Bank____
Photos #s (300 meters) Upstream____ Downstream____ Left Bank ____ Right Bank____

# Measurements	Width (meters)
1	
2	
3	
4	
5	
6	
7	
8	
9	
10	

Field Data Sheets – Basic RUAA Survey

Stream Name Caney Creek above tidal Site: 10
Date: 5/14/10 Time: 1234

F. Additional RUAA Information

1. Check the following activities observed over the site reach.

- ☐ Drinking or water in mouth
- ☐ Bathing
- ☐ Walking
- ☐ Jogging/running
- ☐ Bicycling
- ☐ Standing
- ☐ Sitting
- ☐ Lying down/sleeping
- ☐ Playing on shoreline
- ☐ Picnicking
- ☐ Motorcycle/ATV
- ☐ Hunting/Trapping
- ☐ Wildlife watching
- ☒ None
- ☐ Other: _____

2. Are there permanent or long-term hydrologic modifications that are constructed and operated in a way that affects the recreational uses? ☐ Yes ☒ No (If yes, please provide supporting documentation and photos.)
Comments: _____

3. Check any channel obstructions that apply (Attach photos).

- ☐ Culverts
- ☒ Barbed wire
- ☐ Utility pipe
- ☒ Fences
- ☐ Dams
- ☐ Other (specify): _____
- ☐ Log jams
- ☒ Thick vegetation
- ☐ Rip rap
- ☐ Low bridges
- ☐ Water control structure
- ☐ None

4. Check all surrounding conditions that promote recreational activities (Attach photos of evidence or unusual items of interest).

- ☐ Campgrounds
- ☐ Playgrounds
- ☒ Rural area
- ☐ Residential
- ☐ National forests
- ☐ Urban/suburban location
- ☐ Golf Course
- ☐ Sports Field
- ☐ Stairs/walkway
- ☐ Boating access (ramps)
- ☐ Beach
- ☒ Bridge crossing
- ☐ Commercial boating
- ☐ Trails/paths (hiking/biking)
- ☐ Paved parking lot
- ☐ Unimproved parking lot
- ☒ Roads (paved/unpaved)
- ☒ Populated area
- ☐ Docks or rafts
- ☐ Commercial outfitter
- ☐ Nearby school
- ☐ Power Line Corridor
- ☐ Parks (national/city/county/state)
- ☐ Public Property
- ☐ Other: _____
- ☐ None of the Above

Comments: _____

5. Check all surrounding conditions that impede recreational activities (Attach photos of evidence or unusual items of interest).

- ☒ Private Property
- ☐ No trespass sign
- ☐ Wildlife
- ☐ Steep slopes
- ☐ No public access
- ☐ No roads
- ☒ Fence
- ☐ Barge/ship traffic
- ☐ Industrial
- ☐ None of the Above
- ☐ Other: _____

Comments: _____

6. Check any indications of human use (Attach photos).

- ☒ Roads
- ☐ Rope swings
- ☐ Dock/platform
- ☐ Foot paths/prints
- ☐ Other: _____
- ☐ RV/ATV Tracks
- ☐ Camping Sites
- ☐ Fire pit/ring
- ☐ Fishing Tackle
- ☐ NPDES Discharge
- ☐ Gates on corridor
- ☐ Children's toys
- ☐ Remnant's of Kid's play
- ☐ Organized event
- ☒ No Human Presence

Comments: _____

Field Data Sheets – Basic RUAA Survey

Stream Name Caney Creek above tidal Site: 10
Date: 5/14/10 Time: 1234

7. Check all water characteristics that apply (Attach photos).

Aquatic Vegetation: ☐ absent ☐ rare ☐ common ☒ abundant reed-like
Algae Cover: ☒ absent ☐ rare ☐ common ☐ abundant
Odor: ☒ none ☐ rare ☐ common ☐ abundant
Color: ☐ clear ☐ green ☐ red ☐ brown ☐ black ☒ N/A
Bottom Deposit: ☐ sludge ☒ solids ☐ fine sediments ☐ none ☐ other – dry
Water Surface: ☐ clear ☐ scum ☐ foam ☐ debris ☐ oil ☒ N/A
Other:

8. Vertebrates Observed within 300 meter reach

Snakes	☒ None	☐ slight presence	☐ moderate presence	☐ large presence
Water Dependent Birds	☒ None	☐ slight presence	☐ moderate presence	☐ large presence
Alligators	☒ None	☐ slight presence	☐ moderate presence	☐ large presence

Comments:

9. Mammals Observed within 300 meter reach

Wild	☒ None	☐ slight presence	☐ moderate presence	☐ large presence
Domesticated Pets	☒ None	☐ slight presence	☐ moderate presence	☐ large presence
Livestock	☒ None	☐ slight presence	☐ moderate presence	☐ large presence
Feral Hogs	☒ None	☐ slight presence	☐ moderate presence	☐ large presence

Comments:

10. Evidence of wild animals or evidence of birds, cattle, hogs, etc.
☐ Tracks ☐ Fecal droppings ☐ Bird nests ☒ none

11. Garbage Observed

Large garbage in the channel	☐ None	☐ Rare	☒ Common	☐ Abundant
Small garbage in the channel	☐ None	☒ Rare	☐ Common	☐ Abundant
Bank Garbage	☐ None	☒ Rare	☐ Common	☐ Abundant

Briefly describe the kinds of garbage observed: tires, fuel garbage bags tossed over bridge, food containers

12. Is the site located in a wildlife preserve with large wildlife (i.e waterfowl) population? ☐ Yes ☒ No

13. Please document any other relevant information regarding recreational activities and the water body in general (for example, area outside of the stream reach evaluated).

Field Data Sheet - Basic RUAA Survey

Stream Flow (Discharge) Measurement

Stream: Caney Creek above tidal Date: 5/14/10

Site: 10 Site

Description: FM 1301 @ Caney Creek

Time Begin: 1234 Time End: _____ Meter Type: Sontek Flowtracker

Observers: _____ Stream Width*: _____ Section Width (W): _____

Observations: _____

Section Midpoint (ft) (m)	Section Depth (ft) (m) (cm) (D)	Observational Depth** (ft)(m)	Velocity (V)		Flow (Q) (m^3/s) (ft^3/s) Q = (W)(D)(V)
			At Point (ft/s)(m/s)	Average (ft/s)(m/s)	

No water

SITE #11

Field Data Sheets – Basic RUAA Survey

(should be completed for each site)

Data Collectors & Contact Information:	D. Ramirez, M. Shepard, S. Curtis, C. Green
Date & Time: 5/14/10 1246-1301	County Name: Matagorda
Stream Name: Caney Creek above tidal	
Segment No. or nearest downstream Segment No.: 1305	
Description of Site: Stubble field Rd @ Caney Creek	

At any point during the Basic RUAA Survey it becomes apparent that primary contact recreation is clearly the use for the water body the investigator should stop conducting the UAA.

A. Stream Characteristics:

1. Check the following channel flow status that applies.
   dry X no flow ☐ low normal ☐ high flooded

2. Check the following stream type that applies on the day of the survey:
   Ephemeral: A stream which flows only during or immediately after a rainfall event, and contains no refuge pools capable of sustaining a viable community of aquatic organisms.
   NES X Intermittent: A stream which has a period of zero flow for at least one week during most years. Where flow records are available, a stream with a 7Q2 flow of less than 0.1 cubic feet per second is considered intermittent.
   X Intermittent w/ perennial pools: An intermittent stream which maintains persistent pools even when flow in the stream is less than 0.1 cubic feet per second.
   ☐ Perennial: A stream which flows continuously throughout the year. Perennial streams have a 7Q2 equal to or greater than 0.1 cubic feet per second.
   ☐ Designated or unclassified tidal stream: A stream that is tidally influenced. If you checked this box, you will need to contact the Water Quality Standards Group and evaluate whether or not a bathing beach is located along the tidal stream and whether or not a bathing beach is located along the estuary, bay or Gulf water that the tidal stream flows into.

3. Streamflow n/a
   Use USGS gage data (if a gage is located at a site or within a quarter mile of a site) or use the Stream Flow (Discharge) Measurement Form and follow the procedures outlined in the most recent TCEQ Surface Water Quality Monitoring Procedures, Volume 1, RG-415. If USGS gage data is used for a site, include that information as an attachment and list the streamflow on the sampling date below. If the stream flow taken at one site is representative of the flow at another site(s), then that flow can be used as the observed flow and should be documented below. If the stream flow measured at one site is different from another site, then stream flow should be taken at both sites. _____ cfs little water no flow taken

4. Water Quality Data (Field Parameters)
   Field parameters should be collected in accordance with the procedures outlined in the most recent TCEQ Surface Water Quality Monitoring Procedures, Volume 1.
   Air Temp 31 °C Water Temp 33 °C Secchi 0.05 m

5. Riparian Zone (Mark dominant categories with L (Left Bank) and R (Right Bank). Bank orientation is determined by the investigator facing downstream.)

_____ Forest	SC Urban	_____ Rip rap	L/R CROP
_____ Shrub dominated corridor	5/14/10 R/L Pasture	_____ Concrete	
_____ Herbaceous marsh	SC L Row crops	Other (specify): _____	
_____ Mowed/maintained corridor	5/14/10 Denuded/Eroded bank		

6. Ease of bank access to the water body: ☐ Easy ☐ Moderately easy X Moderately difficult ☐ Difficult

7. Please describe access opportunities or explain why the site is not easily accessible (Attach photos for documentation):
   Relatively steep banks w/ heavy vegetation; fences across upstream & to sides of high bridge; can access @ low ~~bridge~~ bridge downstream

8. Dominant Primary Substrate
   ☐ Cobble ☐ Sand ☐ Silt X Mud/Clay ☐ Gravel ☐ Bedrock ☐ Rip rap ☐ Concrete

Q2 DR
QS PL
E MES

Field Data Sheets – Basic RUAA Survey

Stream Name Caney Creek above tidal Site: 11
Date: 5/14/10 Time: 1246

B. Primary Contact Water Recreation Evaluation:
- Primary contact recreation draft definition: Water recreation activities, such as wading by children, swimming, water skiing, diving, tubing, surfing, and whitewater kayaking, canoeing, and rafting, involving a significant risk of ingestion of water.

1. Were water recreation activities that involve a significant risk of ingestion (full body immersion) observed at this site?
☐ Yes ☒ No primary contact recreation activities were observed

a. Check the following boxes of primary contact recreation activities observed at the time of the sampling event at the site (Attach photos of the activities or lack of activities).

☐ Wading-Children ☐ Tubing ☒ No primary contact activities that commonly occur were observed
☐ Wading-Adults ☐ Surfing
☐ Swimming ☐ Whitewater-kayaking, canoeing, rafting
☐ Water skiing ☐ Other: _____
☐ Diving ☐ frequent public swimming-created by publicly owned land or commercial operations

b. Check the number of individuals observed at the site: ☒ None ☐ 1-10 ☐ 11-20 ☐ 20-50 ☐ greater than 50

c. Check the following that apply regarding the individuals proximity to the water body.
☐ Water in mouth or nose of the individual ☐ Primary touch: Individual's body (or portion) immersed in water
☐ Secondary touch: fishing, pets and related contact with water ☐ Individual is in a boat touching water
☐ Individual is on shore near water within 8 meters (25ft) of water ☐ Individual is well away from water between 8 and 30 meters (100 ft) ☒ Not applicable

2. If primary contact recreation activities are not observed, describe the physical characteristics of the water body that may hinder the frequency of primary contact (depth, etc.) (Attach photos, etc. for documentation).
1 shallow pool

3. Describe if there is public access (e.g. parks, roads, etc.) (Attach photos, maps, etc. for documentation).
road, no parking; private property surrounds

4. Is an area with primary contact recreation activities or a bathing beach (e.g. state/local parks with swimming, etc.) located near (e.g. within 5 miles upstream and downstream) this site? no

C. Secondary Contact Water Recreation Evaluation:
- Secondary contact recreation 1: Water recreation activities, such as fishing, commercial and recreational boating, and limited body contact incidental to shoreline activity, not involving a significant risk of water ingestion and that commonly occur.
- Secondary contact recreation 2: Water recreation activities, such as fishing, commercial and recreational boating, and limited body contact incidental to shoreline activity, not involving a significant risk of water ingestion but that occur less frequently than for secondary contact recreation 1 due to (1) physical characteristics of the water body and/or (2) limited public access.

1. Were water recreation activities observed at the site, but the nature of the recreation does not involve a significant risk of ingestion (e.g. secondary contact recreation activities)? ☐ Yes ☒ No secondary contact recreation activities were observed

a. Check the following boxes of secondary contact recreation activities that were observed at the time of the sampling event at the site (Attach photos of activities or lack of activities).

☐ Fishing
☐ Boating-commercial, recreational
☐ Non-whitewater-kayaking, rafting, canoeing
☒ No secondary contact recreation activities were observed
☐ Other secondary contact activities: _____

Field Data Sheets – Basic RUAA Survey

Stream Name Caney Creek above tidal Site: 11
Date: 5/14/10 Time: 1246

b. Check the number of individuals observed at the site.
X None _ 1-10 _ 11-20 _ 20-50 _ greater than 50

c. Check the following that apply regarding the individuals proximity to the water body. n/a
☐ Secondary touch: fishing, pets and related contact with water ☐ In a boat touching water
☐ Body on shore near water within 8 meters (25ft) of water ☐ Body well away from water between 8 and 30 meters (100 ft)

2. If secondary contact recreation activities are not observed, describe the physical characteristics of the water body that may hinder the frequency of secondary contact (Attach photos, etc. for documentation).
same as before

3. If secondary contact recreation activities are observed, how often do water recreational activities occur that do not involve a significant risk of water ingestion? frequently infrequently n/a
Please describe how often the activities occur? X Unknown Never Daily Monthly Yearly

4. If infrequently, what is the reason? physical characteristics of the water body limited public access
☐ other
If other, list reasons:

5. Describe the physical characteristics of the water body that hinders the frequency of secondary contact recreation (depth, etc.) (Attach photos or depth measurements, etc. for documentation).
same as before

6. Describe why there is limited public access (e.g. lack of roads, river or stream banks overgrown, etc.) (Attach photos, maps, etc. for documentation).
same as before

D. Noncontact Recreation Evaluation

Noncontact recreation applies to water bodies where recreation activities do not involve a significant risk of water ingestion, and where primary and secondary contact recreation uses do not occur because of unsafe conditions, such as barge traffic.

1. Provide site-specific information and documentation (including photographs) regarding unsafe conditions, recreation activities, and presence or absence of water recreation activities.
n/a

Field Data Sheets – Basic RUAA Survey

Stream Name Caney Creek above tidal Site: 11
Date: 5/14/10 ~~FDS Page 3 of 8~~ Time: 1246

E. Stream Channel and Substantial Pools
Please check the following which best describes the river or stream: X Wadeable ☐ Non-wadeable

1. Wadeable Streams
Determine whether or not the average depth at the thalweg is greater than 0.5 meters and if there are substantial pools with a depth of 1 meter or greater. Walk an approximately 300 meter reach (total) at the site and take the following measurements within the 300 meter reach. Measurements should be taken during base flow conditions (sustained or typical dry, warm-weather flows between rainfall events, excluding unusual antecedent conditions of drought or wet weather

Also, take photos facing upstream, downstream, left bank, and right bank at the 30 meters, 150 meters, and 300 meters.
Photos #s (30 meters) Upstream ✓ Downstream ✓ Left Bank ✓ Right Bank ✓ → at low bridge only
Photos #s (150 meters) Upstream____ Downstream____ Left Bank ____ Right Bank____
Photos #s (300 meters) Upstream____ Downstream____ Left Bank ____ Right Bank____

a) Substantial pools - Measure the length of each pool (if > 10 pools only measure 10 pools), the width (at the widest point), and the deepest depth. A substantial pool is considered a pool greater than 10 meters in length for the purposes of a Basic RUAA Survey. If depth and/or width measurements were not attainable, explain why.

	Length (meters)	Width (meters)	Depth (meters)
Pool 1	86m	20.5ft (6.24m)	0.1 m
Pool 2			
Pool 3			
Pool 4			
Pool 5			
Pool 6			
Pool 7			
Pool 8			
Pool 9			
Pool 10			

b)Average depth at the thalweg –Take depth measurements approximately every 30 meters to calculate an average depth at the thalweg (at least 10 measurements needed). If depth and/or width measurements were not attainable, explain why.

Distance	Depth (meters)
30 meters	
60 meters	
90 meters	
120 meters	
150 meters	
180 meters	
210 meters	
240 meters	
270 meters	
300 meters	
Average	

Field Data Sheets – Basic RUAA Survey

Stream Name Caney Creek above tidal Site: 11
Date: 5/14/10 Time: 1246

c) Stream width - Measure (1) the width at one point which represents the typical average width of the 300 meter reach; (2) the width at the narrowest point of the stream within the 300 meter reach; and (3) the width at the widest point of the stream within the 300 meter reach.

Measurement Type	Width (meters)
Typical Average Width of 300 meter reach	
Width at narrowest point of the stream within 300 meter reach	
Width at the widest point of the stream within 300 meter reach	

d) Is there sufficient water within a 300 meter stream reach during base flow conditions to support primary contact recreation? ☐ Yes ☒ No
COMMENTS:

2. Non-wadeable Streams N/A
If accessible, take 10 width measurements which represent typical widths of the 300 meter reach. If the water is too deep and not accessible record the estimated average width of the water body.

Also, take photos facing upstream, downstream, left bank, and right bank at .
Photos #s (30 meters) Upstream____ Downstream____ Left Bank ____ Right Bank____
Photos #s (150 meters) Upstream____ Downstream____ Left Bank ____ Right Bank____
Photos #s (300 meters) Upstream____ Downstream____ Left Bank ____ Right Bank____

# Measurements	Width (meters)
1	
2	
3	
4	
5	
6	
7	
8	
9	
10	

Field Data Sheets – Basic RUAA Survey

Stream Name Caney Creek above tidal Site: 11
Date: 5/14/10 Time: 1246

F. Additional RUAA Information

1. Check the following activities observed over the site reach.

- ☐ Drinking or water in mouth
- ☐ Bathing
- ☐ Walking
- ☐ Jogging/running
- ☐ Bicycling
- ☐ Standing
- ☐ Sitting
- ☐ Lying down/sleeping
- ☐ Playing on shoreline
- ☐ Picnicking
- ☐ Motorcycle/ATV
- ☐ Hunting/Trapping
- ☐ Wildlife watching
- ☒ None
- ☐ Other: _____

2. Are there permanent or long-term hydrologic modifications that are constructed and operated in a way that affects the recreational uses? ☒ Yes ☐ No (If yes, please provide supporting documentation and photos.)
Comments: culvert

3. Check any channel obstructions that apply (Attach photos).

- ☒ Culverts
- ☒ Fences (up)
- ☐ Log jams
- ☐ Rip rap
- ☐ Water control structure
- ☐ Barbed wire
- ☐ Dams
- ☐ Thick vegetation
- ☐ Low bridges
- ☒ None 5-14-10
- ☐ Utility pipe
- ☐ Other (specify): _____

4. Check all surrounding conditions that promote recreational activities (Attach photos of evidence or unusual items of interest).

- ☐ Campgrounds
- ☐ Playgrounds
- ☒ Rural area
- ☒ Residential
- ☐ National forests
- ☐ Urban/suburban location
- ☐ Golf Course
- ☐ Sports Field
- ☐ Stairs/walkway
- ☐ Boating access (ramps)
- ☐ Beach
- ☒ Bridge crossing
- ☐ Commercial boating
- ☐ Trails/paths (hiking/biking)
- ☐ Paved parking lot
- ☐ Unimproved parking lot
- ☒ Roads (paved/unpaved)
- ☒ Populated area
- ☐ Docks or rafts
- ☐ Commercial outfitter
- ☐ Nearby school
- ☐ Power Line Corridor
- ☐ Parks (national/city/county/state)
- ☐ Public Property
- ☐ Other: _____
- ☒ None of the Above

Comments: _____

5. Check all surrounding conditions that impede recreational activities (Attach photos of evidence or unusual items of interest).

- ☒ Private Property
- ☐ No trespass sign
- ☐ Wildlife
- ☐ Steep slopes
- ☐ No public access
- ☐ No roads
- ☒ Fence under bridge
- ☐ Barge/ship traffic
- ☐ Industrial
- ☐ None of the Above
- ☐ Other: _____

Comments: _____

6. Check any indications of human use (Attach photos).

- ☒ Roads
- ☐ Rope swings
- ☐ Dock/platform
- ☐ Foot paths/prints
- ☐ Other: _____
- ☐ RV/ATV Tracks
- ☐ Camping Sites
- ☐ Fire pit/ring
- ☐ Fishing Tackle
- ☐ NPDES Discharge
- ☐ Gates on corridor
- ☐ Children's toys
- ☐ Remnant's of Kid's play
- ☐ Organized event
- ☒ No Human Presence

Comments: _____

Field Data Sheets – Basic RUAA Survey

Stream Name Caney Creek above tidal Site: 11
Date: 5/14/10 Time: 1246

7. Check all water characteristics that apply (Attach photos).

Aquatic Vegetation: absent X rare common abundant
Algae Cover: X absent rare common abundant
Odor: none rare X common abundant
Color: clear green red X brown black
Bottom Deposit: sludge X solids fine sediments none other
Water Surface: X clear scum foam debris oil
Other:

8. Vertebrates Observed within 300 meter reach

Snakes	X None	slight presence	moderate presence	large presence
Water Dependent Birds	None	slight presence	X moderate presence	large presence (5)
Alligators	X None	slight presence	moderate presence	large presence

Comments:

9. Mammals Observed within 300 meter reach

Wild	X None	slight presence	moderate presence	large presence
Domesticated Pets	X None	slight presence	moderate presence	large presence
Livestock	X None	slight presence	moderate presence	large presence
Feral Hogs	X None	slight presence	moderate presence	large presence

Comments:

10. Evidence of wild animals or evidence of birds, cattle, hogs, etc.
X Tracks Fecal droppings Bird nests

11. Garbage Observed

Large garbage in the channel	X None	Rare	Common	Abundant
Small garbage in the channel	None	X Rare	Common	Abundant
Bank Garbage	X None	Rare	Common	Abundant

Briefly describe the kinds of garbage observed: Drink cup

12. Is the site located in a wildlife preserve with large wildlife (i.e waterfowl) population? Yes X No

13. Please document any other relevant information regarding recreational activities and the water body in general (for example, area outside of the stream reach evaluated).

Field Data Sheet - Basic RUAA Survey
Stream Flow (Discharge) Measurement

Stream: Caney Creek above tidal Date: 5/14/10
Site: 10th 11 Site
Description: Stubblefield Rd @ Caney Creek
Time Begin: 1246 Time End: _____ Meter Type: Sontek Flowtracker
Observers: _____ Stream Width*: _____ Section Width (W): _____
Observations: _____

Section Midpoint (ft) (m)	Section Depth (ft) (m) (cm) (D)	Observational Depth** (ft)(m)	Velocity (V) At Point (ft/s)(m/s)	Velocity (V) Average (ft/s)(m/s)	Flow (Q) (m^3/s) (ft^3/s) Q = (W)(D)(V)
		5/14/10 No water flow			

12

12

Field Data Sheets – Basic RUAA Survey

(should be completed for each site)

Data Collectors & Contact Information:	M. Shepard, D. Ramirez, C. Green, S. Curtis
Date & Time: 5/14/10 1316 - 1331	County Name: Matagorda
Stream Name: Caney Creek above tidal	
Segment No. or nearest downstream Segment No.: 1305	
Description of Site: CR 105 @ Caney Creek	

At any point during the Basic RUAA Survey it becomes apparent that primary contact recreation is clearly the use for the water body the investigator should stop conducting the UAA.

A. Stream Characteristics:

1. Check the following channel flow status that applies.
dry X no flow X low normal high flooded

2. Check the following stream type that applies on the day of the survey:
Ephemeral: A stream which flows only during or immediately after a rainfall event, and contains no refuge pools capable of sustaining a viable community of aquatic organisms.
☐ Intermittent: A stream which has a period of zero flow for at least one week during most years. Where flow records are available, a stream with a 7Q2 flow of less than 0.1 cubic feet per second is considered intermittent.
X Intermittent w/ perennial pools: An intermittent stream which maintains persistent pools even when flow in the stream is less than 0.1 cubic feet per second.
☐ Perennial: A stream which flows continuously throughout the year. Perennial streams have a 7Q2 equal to or greater than 0.1 cubic feet per second.
☐ Designated or unclassified tidal stream: A stream that is tidally influenced. If you checked this box, you will need to contact the Water Quality Standards Group and evaluate whether or not a bathing beach is located along the tidal stream and whether or not a bathing beach is located along the estuary, bay or Gulf water that the tidal stream flows into.

3. Streamflow
Use USGS gage data (if a gage is located at a site or within a quarter mile of a site) or use the Stream Flow (Discharge) Measurement Form and follow the procedures outlined in the most recent TCEQ Surface Water Quality Monitoring Procedures, Volume 1, RG-415. If USGS gage data is used for a site, include that information as an attachment and list the streamflow on the sampling date below. If the stream flow taken at one site is representative of the flow at another site(s), then that flow can be used as the observed flow and should be documented below. If the stream flow measured at one site is different from another site, then stream flow should be taken at both sites. ✓ cfs

no flow taken, as water was a large pool - dry upstream

4. Water Quality Data (Field Parameters)
Field parameters should be collected in accordance with the procedures outlined in the most recent TCEQ Surface Water Quality Monitoring Procedures, Volume 1.
Air Temp 30 °C Water Temp ✓ °C Secchi ✓ m

5. Riparian Zone (Mark dominant categories with L (Left Bank) and R (Right Bank). Bank orientation is determined by the investigator facing downstream.)

R, L Forest down	___ Urban	___ Rip rap
___ Shrub dominated corridor	L Pasture up	___ Concrete
___ Herbaceous marsh	___ Row crops	Other (specify): ___
___ Mowed/maintained corridor	___ Denuded/Eroded bank	

6. Ease of bank access to the water body: ☐ Easy ☐ Moderately easy X Moderately difficult ☐ Difficult

7. Please describe access opportunities or explain why the site is not easily accessible (Attach photos for documentation): thick vegetation, steep banks @ bridge, fenced up & down across water

8. Dominant Primary Substrate
☐ Cobble ☐ Sand ☐ Silt X Mud/Clay ☐ Gravel ☐ Bedrock ☐ Rip rap ☐ Concrete

QC PL 262 E MES

Field Data Sheets – Basic RUAA Survey

Stream Name Caney Creek above tidal Site: 12
Date: 5/14/10 Time: 1316

B. Primary Contact Water Recreation Evaluation:
- Primary contact recreation draft definition: Water recreation activities, such as wading by children, swimming, water skiing, diving, tubing, surfing, and whitewater kayaking, canoeing, and rafting, involving a significant risk of ingestion of water.

1. Were water recreation activities that involve a significant risk of ingestion (full body immersion) observed at this site?
☐ Yes ☒ No primary contact recreation activities were observed

a. Check the following boxes of primary contact recreation activities observed at the time of the sampling event at the site (Attach photos of the activities or lack of activities).

☐ Wading-Children ☐ Tubing ☒ No primary contact activities that commonly occur were observed
☐ Wading-Adults ☐ Surfing
☐ Swimming ☐ Whitewater-kayaking, canoeing, rafting
☐ Water skiing ☐ Other: _____
☐ Diving ☐ frequent public swimming-created by publicly owned land or commercial operations

b. Check the number of individuals observed at the site: ☒ None ☐ 1-10 ☐ 11-20 ☐ 20-50 ☐ greater than 50

c. Check the following that apply regarding the individuals proximity to the water body.
☐ Water in mouth or nose of the individual ☐ Primary touch: Individual's body (or portion) immersed in water
☐ Secondary touch: fishing, pets and related contact with water ☐ Individual is in a boat touching water
☐ Individual is on shore near water within 8 meters (25ft) of water ☐ Individual is well away from water between 8 and 30 meters (100 ft) ☒ Not applicable

2. If primary contact recreation activities are not observed, describe the physical characteristics of the water body that may hinder the frequency of primary contact (depth, etc.) (Attach photos, etc. for documentation). shallow, stagnant water covered in duck weed, lots of trash & animal parts/bones in channel

3. Describe if there is public access (e.g. parks, roads, etc.) (Attach photos, maps, etc. for documentation). can park at cemetary; road crosses

4. Is an area with primary contact recreation activities or a bathing beach (e.g. state/local parks with swimming, etc.) located near (e.g. within 5 miles upstream and downstream) this site? No

C. Secondary Contact Water Recreation Evaluation:
- Secondary contact recreation 1: Water recreation activities, such as fishing, commercial and recreational boating, and limited body contact incidental to shoreline activity, not involving a significant risk of water ingestion and that commonly occur.
- Secondary contact recreation 2: Water recreation activities, such as fishing, commercial and recreational boating, and limited body contact incidental to shoreline activity, not involving a significant risk of water ingestion but that occur less frequently than for secondary contact recreation 1 due to (1) physical characteristics of the water body and/or (2) limited public access.

1. Were water recreation activities observed at the site, but the nature of the recreation does not involve a significant risk of ingestion (e.g. secondary contact recreation activities)? ☐ Yes ☒ No secondary contact recreation activities were observed

a. Check the following boxes of secondary contact recreation activities that were observed at the time of the sampling event at the site (Attach photos of activities or lack of activities).

☐ Fishing
☐ Boating-commercial, recreational
☐ Non-whitewater-kayaking, rafting, canoeing
☒ No secondary contact recreation activities were observed
☐ Other secondary contact activities: _____

Field Data Sheets – Basic RUAA Survey

Stream Name Caney Creek above tidal Site: 12
Date: 5/14/10 Time: 1316

b. Check the number of individuals observed at the site.
X None _ 1-10 _ 11-20 _ 20-50 _ greater than 50

c. Check the following that apply regarding the individuals proximity to the water body.
☐ Secondary touch: fishing, pets and related contact with water ☐ In a boat touching water
☐ Body on shore near water within 8 meters (25ft) of water ☐ Body well away from water between 8 and 30 meters (100 ft) ☒ N/A

2. If secondary contact recreation activities are not observed, describe the physical characteristics of the water body that may hinder the frequency of secondary contact (Attach photos, etc. for documentation).
same as before

3. If secondary contact recreation activities are observed, how often do water recreational activities occur that do not involve a significant risk of water ingestion? frequently infrequently N/A
Please describe how often the activities occur? Unknown Never Daily Monthly Yearly

4. If infrequently, what is the reason? physical characteristics of the water body limited public access
☐ other
If other, list reasons: N/A

5. Describe the physical characteristics of the water body that hinders the frequency of secondary contact recreation (depth, etc.) (Attach photos or depth measurements, etc. for documentation).
same as before

6. Describe why there is limited public access (e.g. lack of roads, river or stream banks overgrown, etc.) (Attach photos, maps, etc. for documentation).
same as before

D. Noncontact Recreation Evaluation

Noncontact recreation applies to water bodies where recreation activities do not involve a significant risk of water ingestion, and where primary and secondary contact recreation uses do not occur because of unsafe conditions, such as barge traffic.

1. Provide site-specific information and documentation (including photographs) regarding unsafe conditions, recreation activities, and presence or absence of water recreation activities.

large amounts of trash and debris in channel, most of pool covered with duckweed, other large tree/stick debris in water

Field Data Sheets – Basic RUAA Survey

Stream Name Caney Creek above tidal Site: 12
Date: 5/14/10 FDS Page 3 of 8 Time: 1316

E. Stream Channel and Substantial Pools
Please check the following which best describes the river or stream: ☐ Wadeable ☒ Non-wadeable
too much trash & debris

1. Wadeable Streams
Determine whether or not the average depth at the thalweg is greater than 0.5 meters and if there are substantial pools with a depth of 1 meter or greater. Walk an approximately 300 meter reach (total) at the site and take the following measurements within the 300 meter reach. Measurements should be taken during base flow conditions (sustained or typical dry, warm-weather flows between rainfall events, excluding unusual antecedent conditions of drought or wet weather

Also, take photos facing upstream, downstream, left bank, and right bank at the 30 meters, 150 meters, and 300 meters.
Photos #s (30 meters) Upstream ✓ Downstream ✓ Left Bank ✓ Right Bank ✓
Photos #s (150 meters) Upstream ✓ Downstream ✓ Left Bank ✓ Right Bank ✓
Photos #s (300 meters) Upstream____ Downstream____ Left Bank____ Right Bank____
only @ bridge up & down

a) Substantial pools - Measure the length of each pool (if > 10 pools only measure 10 pools), the width (at the widest point), and the deepest depth. A substantial pool is considered a pool greater than 10 meters in length for the purposes of a Basic RUAA Survey. If depth and/or width measurements were not attainable, explain why.

	Length (meters)	Width (meters)	Depth (meters)
Pool 1	102	20	
Pool 2			
Pool 3			
Pool 4			
Pool 5			
Pool 6			
Pool 7			
Pool 8			
Pool 9			
Pool 10			

· used a rangefinder to find distance in lieu of walking in channel or along banks due to poor appearance of water quality

b)Average depth at the thalweg –Take depth measurements approximately every 30 meters to calculate an average depth at the thalweg (at least 10 measurements needed). If depth and/or width measurements were not attainable, explain why.

Distance	Depth (meters)
30 meters	
60 meters	
90 meters	
120 meters	
150 meters	
180 meters	
210 meters	
240 meters	
270 meters	
300 meters	
Average	

- could see 70m up, 32m down; 20m across water/pool

Field Data Sheets – Basic RUAA Survey

Stream Name Caney Creek above tidal Site: 12
Date: 5/14/10 Time: 1316

c) Stream width - Measure (1) the width at one point which represents the typical average width of the 300 meter reach; (2) the width at the narrowest point of the stream within the 300 meter reach; and (3) the width at the widest point of the stream within the 300 meter reach.

Measurement Type	Width (meters)
Typical Average Width of 300 meter reach	
Width at narrowest point of the stream within 300 meter reach	
Width at the widest point of the stream within 300 meter reach	

N/A

d) Is there sufficient water within a 300 meter stream reach during base flow conditions to support primary contact recreation? ☐ Yes ~~☒ No~~
COMMENTS: children wading, though probably very unsafe

2. Non-wadeable Streams N/A
If accessible, take 10 width measurements which represent typical widths of the 300 meter reach. If the water is too deep and not accessible record the estimated average width of the water body.

Also, take photos facing upstream, downstream, left bank, and right bank at .
Photos #s (30 meters) Upstream____ Downstream____ Left Bank ____ Right Bank____
Photos #s (150 meters) Upstream____ Downstream____ Left Bank ____ Right Bank____
Photos #s (300 meters) Upstream____ Downstream____ Left Bank ____ Right Bank____

# Measurements	Width (meters)
1	
2	
3	
4	
5	
6	
7	
8	
9	
10	

Field Data Sheets – Basic RUAA Survey

Stream Name Caney Creek above tidal Site: 12
Date: 5/14/10 Time: 1316

F. Additional RUAA Information

1. Check the following activities observed over the site reach.

- ☐ Drinking or water in mouth
- ☐ Bathing
- ☐ Walking
- ☐ Jogging/running
- ☐ Bicycling
- ☐ Standing
- ☐ Sitting
- ☐ Lying down/sleeping
- ☐ Playing on shoreline
- ☐ Picnicking
- ☐ Motorcycle/ATV
- ☐ Hunting/Trapping
- ☑ Wildlife watching
- ☒ None
- ☐ Other: _____

2. Are there permanent or long-term hydrologic modifications that are constructed and operated in a way that affects the recreational uses? ☐ Yes ☒ No (If yes, please provide supporting documentation and photos.)
Comments: _____

3. Check any channel obstructions that apply (Attach photos).

- ☐ Culverts
- ☒ Fences
- ☐ Log jams
- ☐ Rip rap
- ☐ Water control structure
- ☐ Barbed wire
- ☐ Dams
- ☐ Thick vegetation
- ☐ Low bridges
- ☐ None
- ☐ Utility pipe
- ☐ Other (specify): _____

4. Check all surrounding conditions that promote recreational activities (Attach photos of evidence or unusual items of interest).

- ☐ Campgrounds
- ☐ Playgrounds
- ☒ Rural area
- ☐ Residential
- ☐ National forests
- ☐ Urban/suburban location
- ☐ Golf Course
- ☐ Sports Field
- ☐ Stairs/walkway
- ☐ Boating access (ramps)
- ☐ Beach
- ☒ Bridge crossing
- ☐ Commercial boating
- ☐ Trails/paths (hiking/biking)
- ☐ Paved parking lot
- ☐ Unimproved parking lot
- ☒ Roads (paved/unpaved)
- ☐ Populated area
- ☐ Docks or rafts
- ☐ Commercial outfitter
- ☐ Nearby school
- ☐ Power Line Corridor
- ☐ Parks (national/city/county/state)
- ☐ Public Property
- ☒ Other: cemetery
- ☐ None of the Above

Comments: _____

5. Check all surrounding conditions that impede recreational activities (Attach photos of evidence or unusual items of interest).

- ☒ Private Property
- ☐ No trespass sign
- ☐ Wildlife
- ☒ Steep slopes
- ☐ No public access
- ☐ No roads
- ☒ Fence
- ☐ Barge/ship traffic
- ☐ Industrial
- ☐ None of the Above
- ☐ Other: _____

Comments: _____

6. Check any indications of human use (Attach photos).

- ☒ Roads
- ☐ Rope swings
- ☐ Dock/platform
- ☐ Foot paths/prints
- ☐ Other: _____
- ☐ RV/ATV Tracks
- ☐ Camping Sites
- ☐ Fire pit/ring
- ☐ Fishing Tackle
- ☐ NPDES Discharge
- ☐ Gates on corridor
- ☐ Children's toys
- ☐ Remnant's of Kid's play
- ☐ Organized event
- ☐ No Human Presence

Comments: lots of trash dumped

Field Data Sheets – Basic RUAA Survey

Stream Name Caney Creek above tidal Site: 12
Date: 5/14/10 Time: 1316

7. Check all water characteristics that apply (Attach photos).

Aquatic Vegetation: absent rare X common abundant duckweed
Algae Cover: X absent rare common abundant
Odor: X none rare common abundant
Color: clear green red X brown black
Bottom Deposit: sludge solids X fine sediments none other
Water Surface: clear scum foam debris oil ☒ duckweed
Other:

8. Vertebrates Observed within 300 meter reach

Snakes	X None	slight presence	moderate presence	large presence
Water Dependent Birds	X None	slight presence	moderate presence	large presence
Alligators	X None	slight presence	moderate presence	large presence

Comments:

9. Mammals Observed within 300 meter reach

Wild	X None	slight presence	moderate presence	large presence
Domesticated Pets	X None	slight presence	moderate presence	large presence
Livestock	X None	slight presence	moderate presence	large presence
Feral Hogs	X None	slight presence	moderate presence	large presence

Comments:

10. Evidence of wild animals or evidence of birds, cattle, hogs, etc.
Tracks Fecal droppings Bird nests ☒ Bones – lots, but probably dumped ~~not~~

11. Garbage Observed

Large garbage in the channel	None	Rare	Common	X Abundant
Small garbage in the channel	None	Rare	Common	X Abundant
Bank Garbage	None	X Rare	Common	Abundant

Briefly describe the kinds of garbage observed: ~~bridge~~ window a/c unit, HVAC fan unit, washing machine, drill, trash bags full of trash & leaf litter, bones, other misc., fishing gear, bicycle, buckets, various containers

12. Is the site located in a wildlife preserve with large wildlife (i.e waterfowl) population? Yes X No

13. Please document any other relevant information regarding recreational activities and the water body in general (for example, area outside of the stream reach evaluated).

could see creek upstream while driving to site, mostly dry w/ some pools

Field Data Sheet - Basic RUAA Survey

Stream Flow (Discharge) Measurement

Stream: Caney creek above tidal Date: 5/14/10

Site: 12 Site

Description: CR 105 @ Caney Creek

Time Begin: 1316 Time End: _____ Meter Type: Sontek Flowtracker

Observers: _____ Stream Width*: _____ Section Width (W): _____

Observations: _____

Section Midpoint (ft) (m)	Section Depth (ft) (m) (cm) (D)	Observational Depth** (ft)(m)	Velocity (V) At Point (ft/s)(m/s)	Velocity (V) Average (ft/s)(m/s)	Flow (Q) (m^3/s) (ft^3/s) Q = (W)(D)(V)

No Flow / moving water

13

Field Data Sheets – Basic RUAA Survey

(should be completed for each site)

Data Collectors & Contact Information:	M. Shepard, D. Ramirez, S. Curtis, C. Green
Date & Time: 5/14/10 1345 - 1448	County Name: Matagorda
Stream Name:	Caney Creek above tidal
Segment No. or nearest downstream Segment No.:	1305
Description of Site:	FM 3156 @ Caney Creek

At any point during the Basic RUAA Survey it becomes apparent that primary contact recreation is clearly the use for the water body the investigator should stop conducting the UAA.

A. Stream Characteristics:

1. Check the following channel flow status that applies.

dry | no flow X low normal | high flooded

2. Check the following stream type that applies on the day of the survey:

Ephemeral: A stream which flows only during or immediately after a rainfall event, and contains no refuge pools capable of sustaining a viable community of aquatic organisms.

☐ Intermittent: A stream which has a period of zero flow for at least one week during most years. Where flow records are available, a stream with a 7Q2 flow of less than 0.1 cubic feet per second is considered intermittent.

☐ Intermittent w/ perennial pools: An intermittent stream which maintains persistent pools even when flow in the stream is less than 0.1 cubic feet per second.

X Perennial: A stream which flows continuously throughout the year. Perennial streams have a 7Q2 equal to or greater than 0.1 cubic feet per second.

☐ Designated or unclassified tidal stream: A stream that is tidally influenced. If you checked this box, you will need to contact the Water Quality Standards Group and evaluate whether or not a bathing beach is located along the tidal stream and whether or not a bathing beach is located along the estuary, bay or Gulf water that the tidal stream flows into.

3. Streamflow

Use USGS gage data (if a gage is located at a site or within a quarter mile of a site) or use the Stream Flow (Discharge) Measurement Form and follow the procedures outlined in the most recent TCEQ Surface Water Quality Monitoring Procedures, Volume 1, RG-415. If USGS gage data is used for a site, include that information as an attachment and list the streamflow on the sampling date below. If the stream flow taken at one site is representative of the flow at another site(s), then that flow can be used as the observed flow and should be documented below. If the stream flow measured at one site is different from another site, then stream flow should be taken at both sites. ~0.050 cfs

4. Water Quality Data (Field Parameters)

Field parameters should be collected in accordance with the procedures outlined in the most recent TCEQ Surface Water Quality Monitoring Procedures, Volume 1.

Air Temp 27 °C Water Temp 26.5 °C Secchi 0.364 m

5. Riparian Zone (Mark dominant categories with L (Left Bank) and R (Right Bank). Bank orientation is determined by the investigator facing downstream.)

R, L Forest	____ Urban	____ Rip rap
____ Shrub dominated corridor	____ Pasture	____ Concrete
____ Herbaceous marsh	____ Row crops	Other (specify): ____
____ Mowed/maintained corridor	____ Denuded/Eroded bank	

6. Ease of bank access to the water body: ☐ Easy ☐ Moderately easy X Moderately difficult ☐ Difficult

7. Please describe access opportunities or explain why the site is not easily accessible (Attach photos for documentation): thick vegetation & relatively steep banks

8. Dominant Primary Substrate

☐ Cobble ☐ Sand X Silt ☐ Mud/Clay ☐ Gravel ☐ Bedrock ☐ Rip rap ☐ Concrete

Q2 DRR

270 MES

QC PL

Field Data Sheets – Basic RUAA Survey

Stream Name Caney Creek above tidal Site: 13
Date: 5/14/10 Time: 1345

B. Primary Contact Water Recreation Evaluation:
- Primary contact recreation draft definition: Water recreation activities, such as wading by children, swimming, water skiing, diving, tubing, surfing, and whitewater kayaking, canoeing, and rafting, involving a significant risk of ingestion of water.

1. Were water recreation activities that involve a significant risk of ingestion (full body immersion) observed at this site?
☐ Yes ☒ No primary contact recreation activities were observed

a. Check the following boxes of primary contact recreation activities observed at the time of the sampling event at the site (Attach photos of the activities or lack of activities).

☐ Wading-Children ☐ Tubing ☒ No primary contact activities that commonly occur were observed
☐ Wading-Adults ☐ Surfing
☐ Swimming ☐ Whitewater-kayaking, canoeing, rafting
☐ Water skiing ☐ Other: _____
☐ Diving ☐ frequent public swimming-created by publicly owned land or commercial operations

b. Check the number of individuals observed at the site: ☒ None ☐ 1-10 ☐ 11-20 ☐ 20-50 ☐ greater than 50

c. Check the following that apply regarding the individuals proximity to the water body.
☐ Water in mouth or nose of the individual ☐ Primary touch: Individual's body (or portion) immersed in water
☐ Secondary touch: fishing, pets and related contact with water ☐ Individual is in a boat touching water
☐ Individual is on shore near water within 8 meters (25ft) of water ☐ Individual is well away from water between 8 and 30 meters (100 ft) ☒ Not applicable

2. If primary contact recreation activities are not observed, describe the physical characteristics of the water body that may hinder the frequency of primary contact (depth, etc.) (Attach photos, etc. for documentation).
Muddy & soft silty sides, shallow water, some debris in water, log jam up.

3. Describe if there is public access (e.g. parks, roads, etc.) (Attach photos, maps, etc. for documentation).
can pull of side of road, no parking or parks

4. Is an area with primary contact recreation activities or a bathing beach (e.g. state/local parks with swimming, etc.) located near (e.g. within 5 miles upstream and downstream) this site? No

C. Secondary Contact Water Recreation Evaluation:
- Secondary contact recreation 1: Water recreation activities, such as fishing, commercial and recreational boating, and limited body contact incidental to shoreline activity, not involving a significant risk of water ingestion and that commonly occur.
- Secondary contact recreation 2: Water recreation activities, such as fishing, commercial and recreational boating, and limited body contact incidental to shoreline activity, not involving a significant risk of water ingestion but that occur less frequently than for secondary contact recreation 1 due to (1) physical characteristics of the water body and/or (2) limited public access.

1. Were water recreation activities observed at the site, but the nature of the recreation does not involve a significant risk of ingestion (e.g. secondary contact recreation activities)? ☐ Yes ☒ No secondary contact recreation activities were observed

a. Check the following boxes of secondary contact recreation activities that were observed at the time of the sampling event at the site (Attach photos of activities or lack of activities).

☐ Fishing
☐ Boating-commercial, recreational
☐ Non-whitewater-kayaking, rafting, canoeing
☒ No secondary contact recreation activities were observed
☐ Other secondary contact activities: _____

Field Data Sheets – Basic RUAA Survey

Stream Name Caney Creek above tidal Site: 13
Date: 5/14/10 Time: 1345

b. Check the number of individuals observed at the site.
X None _ 1-10 _ 11-20 _ 20-50 _ greater than 50

c. Check the following that apply regarding the individuals proximity to the water body.
☐ Secondary touch: fishing, pets and related contact with water ☐ In a boat touching water
☐ Body on shore near water within 8 meters (25ft) of water ☐ Body well away from water between 8 and 30 meters (100 ft) ☒ N/A

2. If secondary contact recreation activities are not observed, describe the physical characteristics of the water body that may hinder the frequency of secondary contact (Attach photos, etc. for documentation).

same as before

3. If secondary contact recreation activities are observed, how often do water recreational activities occur that do not involve a significant risk of water ingestion? frequently infrequently N/A
Please describe how often the activities occur? Unknown Never Daily Monthly Yearly

4. If infrequently, what is the reason? physical characteristics of the water body limited public access
☐ other
If other, list reasons: N/A

5. Describe the physical characteristics of the water body that hinders the frequency of secondary contact recreation (depth, etc.) (Attach photos or depth measurements, etc. for documentation).

same as before

6. Describe why there is limited public access (e.g. lack of roads, river or stream banks overgrown, etc.) (Attach photos, maps, etc. for documentation).

same as before

D. Noncontact Recreation Evaluation

Noncontact recreation applies to water bodies where recreation activities do not involve a significant risk of water ingestion, and where primary and secondary contact recreation uses do not occur because of unsafe conditions, such as barge traffic.

1. Provide site-specific information and documentation (including photographs) regarding unsafe conditions, recreation activities, and presence or absence of water recreation activities.

Field Data Sheets – Basic RUAA Survey

Stream Name Caney Creek (1305) Site: 13
Date: 5/14/10 ~~FDS Page 3 of 8~~ Time: 1345

E. Stream Channel and Substantial Pools
Please check the following which best describes the river or stream: ☒ Wadeable ☐ Non-wadeable
though bottom quite soft

1. Wadeable Streams
Determine whether or not the average depth at the thalweg is greater than 0.5 meters and if there are substantial pools with a depth of 1 meter or greater. Walk an approximately 300 meter reach (total) at the site and take the following measurements within the 300 meter reach. Measurements should be taken during base flow conditions (sustained or typical dry, warm-weather flows between rainfall events, excluding unusual antecedent conditions of drought or wet weather

Also, take photos facing upstream, downstream, left bank, and right bank at the 30 meters, 150 meters, and 300 meters.
Photos #s (30 meters) Upstream ✓ Downstream ✓ Left Bank ✓ Right Bank ✓
Photos #s (150 meters) Upstream ✓ Downstream ✓ Left Bank ✓ Right Bank ✓
Photos #s (300 meters) Upstream ✓ Downstream ✓ Left Bank ✓ Right Bank ✓

a) Substantial pools - Measure the length of each pool (if > 10 pools only measure 10 pools), the width (at the widest point), and the deepest depth. A substantial pool is considered a pool greater than 10 meters in length for the purposes of a Basic RUAA Survey. If depth and/or width measurements were not attainable, explain why. N/A

	Length (meters)	Width (meters)	Depth (meters)
Pool 1			
Pool 2			
Pool 3			
Pool 4			
Pool 5			
Pool 6			
Pool 7			
Pool 8			
Pool 9			
Pool 10			

b)Average depth at the thalweg –Take depth measurements approximately every 30 meters to calculate an average depth at the thalweg (at least 10 measurements needed). If depth and/or width measurements were not attainable, explain why.

Distance	(ft) Depth	(meters)
30 meters	1.2	0.366
60 meters	0.5	0.152
90 meters	1.2	0.366
120 meters	0.9	0.274
150 meters	1.3	0.396
180 meters	0.6	0.183
210 meters	0.5	0.152
240 meters	0.9	0.274
270 meters	1.1	0.335
300 meters	1.6	0.488
Average		0.299

Field Data Sheets – Basic RUAA Survey

Stream Name Caney Creek above tidal Site: 13
Date: _____ Time: _____

7. Check all water characteristics that apply (Attach photos).
Aquatic Vegetation: ☐ absent ☐ rare ☒ common ☐ abundant
Algae Cover: ☒ absent ☐ rare ☐ common ☐ abundant
Odor: ☐ none ☒ rare ☐ common ☐ abundant
Color: ☒ clear ☐ green ☐ red ☐ brown ☐ black
Bottom Deposit: ☐ sludge ☐ solids ☒ fine sediments ☐ none ☐ other
Water Surface: ☒ clear ☐ scum ☐ foam ☐ debris ☐ oil
Other:
some duck weed

8. Vertebrates Observed within 300 meter reach
Snakes ☐ None ☒ slight presence ☐ moderate presence ☐ large presence (2)
Water Dependent Birds ☒ None ☐ slight presence ☐ moderate presence ☐ large presence
Alligators ☒ None ☐ slight presence ☐ moderate presence ☐ large presence
Comments: _____

9. Mammals Observed within 300 meter reach
Wild ☒ None ☒ slight presence ☐ moderate presence ☐ large presence
Domesticated Pets ☒ None ☒ slight presence ☐ moderate presence ☐ large presence
Livestock ☐ None ☐ slight presence ☒ moderate presence ☐ large presence
Feral Hogs ☒ None ☐ slight presence ☐ moderate presence ☐ large presence
Comments: _____

could hear but not see them

10. Evidence of wild animals or evidence of birds, cattle, hogs, etc.
☒ Tracks ☐ Fecal droppings ☐ Bird nests

11. Garbage Observed
Large garbage in the channel ☒ None ☒ Rare ☐ Common ☐ Abundant
Small garbage in the channel ☒ None ☐ Rare ☐ Common ☐ Abundant
Bank Garbage ☐ None ☒ Rare ☐ Common ☐ Abundant
Briefly describe the kinds of garbage observed: food wrappers/containers, small rubber duckie, tires, barrel/50-gal drum.

12. Is the site located in a wildlife preserve with large wildlife (i.e waterfowl) population? ☐ Yes ☒ No

13. Please document any other relevant information regarding recreational activities and the water body in general (for example, area outside of the stream reach evaluated).

Field Data Sheet - Basic RUAA Survey

Stream Flow (Discharge) Measurement

Stream: Caney Creek above tidal Date: 5/14/10

Site: 3 Site

Description: FM 3156 @ Caney Creek

Time Begin: 1400 Time End: 1425 Meter Type: Sontek Flowtracker

Observers: M. Shepard, D. Ramirez Stream Width*: 19.5 Section Width (W): 1.95

Observations: too shallow at narrower section to take flow

	Section Midpoint (ft) (m)	Section Depth (ft) (m) (cm) (D)	Observational Depth** (ft)(m)	Velocity (V) At Point (ft/s)(m/s)	Velocity (V) Average (ft/s)(m/s)	Flow (Q) (m^3/s) (ft^3/s) Q = (W)(D)(V)
1	0.975	0.50			0.02	0.020
2	2.925	0.90			0.03	0.053
3	4.875	1.30			-0.02*	-0.051
4	6.825	1.30			-0.06*	-0.152
5	8.775	1.40			0.01	0.027
6	10.725	1.10			0.00	0.000
7	12.675	~~0.75~~ 0.95 MES 5/14/10			0.03	0.056
8	14.625	0.75			+0.01	0.015
9	16.575	0.65			-0.02	-0.025
10	18.525	0.45			0.01	0.009

* little eddy in channel from around a tire

Total Q = ~~-0.067~~ KC 10/28/10 -0.050 cfs

E MES

Site 13

Field Data Sheets – Basic RUAA Survey

Stream Name Caney Creek above tidal Site: 13
Date: 6/19/10 FDS Page 3 of 8 Time: 3:00 PM

E. Stream Channel and Substantial Pools

Please check the following which best describes the river or stream: ☐ Wadeable ☐ Non-wadeable

1. Wadeable Streams

Determine whether or not the average depth at the thalweg is greater than 0.5 meters and if there are substantial pools with a depth of 1 meter or greater. Walk an approximately 300 meter reach (total) at the site and take the following measurements within the 300 meter reach. Measurements should be taken during base flow conditions (sustained or typical dry, warm-weather flows between rainfall events, excluding unusual antecedent conditions of drought or wet weather

Also, take photos facing upstream, downstream, left bank, and right bank at the 30 meters, 150 meters, and 300 meters.

Photos #s (30 meters) Upstream ✓ Downstream ✓ Left Bank ✓ Right Bank ✓
Photos #s (150 meters) Upstream ✓ Downstream ✓ Left Bank ✓ Right Bank ✓
Photos #s (300 meters) Upstream ✓ Downstream ✓ Left Bank ✓ Right Bank ✓

a) Substantial pools - Measure the length of each pool (if > 10 pools only measure 10 pools), the width (at the widest point), and the deepest depth. A substantial pool is considered a pool greater than 10 meters in length for the purposes of a Basic RUAA Survey. If depth and/or width measurements were not attainable, explain why.

	Length (meters)	Width (meters)	Depth (meters)
Pool 1			
Pool 2			
Pool 3			
Pool 4			
Pool 5			
Pool 6			
Pool 7			
Pool 8			
Pool 9			
Pool 10			

b)Average depth at the thalweg –Take depth measurements approximately every 30 meters to calculate an average depth at the thalweg (at least 10 measurements needed). If depth and/or width measurements were not attainable, explain why.

Distance	Depth (meters)
30 meters	12 inches (0.304 m)
60 meters	5 inches (0.126 m)
90 meters	12 inches (0.304 m)
120 meters	9 inches (0.228 m)
150 meters	13 inches (0.330 m)
180 meters	6 inches (0.152 m)
210 meters	5 inches (0.126 m)
240 meters	9 inches (0.228 m)
270 meters	11 inches (0.279 m)
300 meters	16 inches (0.405 m)
Average	(0.2482 m)

Field Data Sheets – Basic RUAA Survey

Stream Name Caney Creek above tidal Site: 13
Date: _____ Time: _____

c) Stream width - Measure (1) the width at one point which represents the typical average width of the 300 meter reach; (2) the width at the narrowest point of the stream within the 300 meter reach; and (3) the width at the widest point of the stream within the 300 meter reach.

Measurement Type	Width (meters)
Typical Average Width of 300 meter reach	25 ft 7.6 m
Width at narrowest point of the stream within 300 meter reach	20 ft 6.09 m
Width at the widest point of the stream within 300 meter reach	31 ft 9.44 m

d) Is there sufficient water within a 300 meter stream reach during base flow conditions to support primary contact recreation? ☐ Yes ☐ No
COMMENTS:

_____

_____

2. Non-wadeable Streams
If accessible, take 10 width measurements which represent typical widths of the 300 meter reach. If the water is too deep and not accessible record the estimated average width of the water body.

Also, take photos facing upstream, downstream, left bank, and right bank at .
Photos #s (30 meters) Upstream____ Downstream____ Left Bank ____ Right Bank____
Photos #s (150 meters) Upstream____ Downstream____ Left Bank ____ Right Bank____
Photos #s (300 meters) Upstream____ Downstream____ Left Bank ____ Right Bank____

# Measurements	Width (meters)
1	
2	
3	
4	
5	
6	
7	
8	
9	
10	

14

14

Field Data Sheets – Basic RUAA Survey

(should be completed for each site)

Data Collectors & Contact Information: P. Lokanath, M. Shepard, K. Condra	
Date & Time: 05/21/10 10:14 – 12:19	County Name: Matagorda
Stream Name: Caney Creek above tidal	
Segment No. or nearest downstream Segment No.: 1305	
Description of Site: Old Van Vleck Rd @ Caney Creek	

At any point during the Basic RUAA Survey it becomes apparent that primary contact recreation is clearly the use for the water body the investigator should stop conducting the UAA.

A. Stream Characteristics:

1. Check the following channel flow status that applies.
dry ☐ no flow ☐ low normal ☒ high flooded

2. Check the following stream type that applies on the day of the survey:
Ephemeral: A stream which flows only during or immediately after a rainfall event, and contains no refuge pools capable of sustaining a viable community of aquatic organisms.
☐ Intermittent: A stream which has a period of zero flow for at least one week during most years. Where flow records are available, a stream with a 7Q2 flow of less than 0.1 cubic feet per second is considered intermittent.
☐ Intermittent w/ perennial pools: An intermittent stream which maintains persistent pools even when flow in the stream is less than 0.1 cubic feet per second.
☒ Perennial: A stream which flows continuously throughout the year. Perennial streams have a 7Q2 equal to or greater than 0.1 cubic feet per second.
☐ Designated or unclassified tidal stream: A stream that is tidally influenced. If you checked this box, you will need to contact the Water Quality Standards Group and evaluate whether or not a bathing beach is located along the tidal stream and whether or not a bathing beach is located along the estuary, bay or Gulf water that the tidal stream flows into.

3. Streamflow
Use USGS gage data (if a gage is located at a site or within a quarter mile of a site) or use the Stream Flow (Discharge) Measurement Form and follow the procedures outlined in the most recent TCEQ Surface Water Quality Monitoring Procedures, Volume 1, RG-415. If USGS gage data is used for a site, include that information as an attachment and list the streamflow on the sampling date below. If the stream flow taken at one site is representative of the flow at another site(s), then that flow can be used as the observed flow and should be documented below. If the stream flow measured at one site is different from another site, then stream flow should be taken at both sites. 59.703 cfs

4. Water Quality Data (Field Parameters)
Field parameters should be collected in accordance with the procedures outlined in the most recent TCEQ Surface Water Quality Monitoring Procedures, Volume 1.
Air Temp 33 °C Water Temp 25 °C Secchi 0-11 m

5. Riparian Zone (Mark dominant categories with L (Left Bank) and R (Right Bank). Bank orientation is determined by the investigator facing downstream.)

____ Forest	____ Urban	____ Rip rap
R/L Shrub dominated corridor with cus	____ Pasture	____ Concrete
____ Herbaceous marsh	____ Row crops	Other (specify): ____
____ Mowed/maintained corridor	____ Denuded/Eroded bank	

6. Ease of bank access to the water body: ☐ Easy ☒ Moderately easy ☐ Moderately difficult ☐ Difficult

7. Please describe access opportunities or explain why the site is not easily accessible (Attach photos for documentation):
Bridge crossing, pull off the road & park in ditch moderately steep concrete under the bank

8. Dominant Primary Substrate
☐ Cobble ☐ Sand ☒ Silt ☐ Mud/Clay ☐ Gravel ☐ Bedrock ☐ Rip rap ☐ Concrete

Q2 DDR

Q2 PL

Field Data Sheets – Basic RUAA Survey

Stream Name Caney Creek above tidal Site: 14
Date: 05/24/10 Time: 1014

B. Primary Contact Water Recreation Evaluation:
- Primary contact recreation draft definition: Water recreation activities, such as wading by children, swimming, water skiing, diving, tubing, surfing, and whitewater kayaking, canoeing, and rafting, involving a significant risk of ingestion of water.

1. Were water recreation activities that involve a significant risk of ingestion (full body immersion) observed at this site?
☐ Yes ☒ No primary contact recreation activities were observed

a. Check the following boxes of primary contact recreation activities observed at the time of the sampling event at the site (Attach photos of the activities or lack of activities).

☐ Wading-Children ☐ Tubing ☒ No primary contact activities that commonly occur were observed
☐ Wading-Adults ☐ Surfing
☐ Swimming ☐ Whitewater-kayaking, canoeing, rafting
☐ Water skiing ☐ Other: _____
☐ Diving ☐ frequent public swimming-created by publicly owned land or commercial operations

b. Check the number of individuals observed at the site: ☐ None ☒ 1-10 ☐ 11-20 ☐ 20-50 ☐ greater than 50

c. Check the following that apply regarding the individuals proximity to the water body.
☐ Water in mouth or nose of the individual ☐ Primary touch: Individual's body (or portion) immersed in water
☐ Secondary touch: fishing, pets and related contact with water ☐ Individual is in a boat touching water
☒ Individual is on shore near water within 8 meters (25ft) of water ☐ Individual is well away from water between 8 and 30 meters (100 ft) ☒ Not applicable

2. If primary contact recreation activities are not observed, describe the physical characteristics of the water body that may hinder the frequency of primary contact (depth, etc.) (Attach photos, etc. for documentation).
lot of debri & trash in water & bank high water.

3. Describe if there is public access (e.g. parks, roads, etc.) (Attach photos, maps, etc. for documentation).
Bridge Crossing

4. Is an area with primary contact recreation activities or a bathing beach (e.g. state/local parks with swimming, etc.) located near (e.g. within 5 miles upstream and downstream) this site? ~~N/A~~ no

C. Secondary Contact Water Recreation Evaluation:
- Secondary contact recreation 1: Water recreation activities, such as fishing, commercial and recreational boating, and limited body contact incidental to shoreline activity, not involving a significant risk of water ingestion and that commonly occur.
- Secondary contact recreation 2: Water recreation activities, such as fishing, commercial and recreational boating, and limited body contact incidental to shoreline activity, not involving a significant risk of water ingestion but that occur less frequently than for secondary contact recreation 1 due to (1) physical characteristics of the water body and/or (2) limited public access.

1. Were water recreation activities observed at the site, but the nature of the recreation does not involve a significant risk of ingestion (e.g. secondary contact recreation activities)? ☐ Yes ☒ No secondary contact recreation activities were observed

a. Check the following boxes of secondary contact recreation activities that were observed at the time of the sampling event at the site (Attach photos of activities or lack of activities).
☐ Fishing
☐ Boating-commercial, recreational
☐ Non-whitewater-kayaking, rafting, canoeing
☒ No secondary contact recreation activities were observed
☐ Other secondary contact activities: _____

Field Data Sheets – Basic RUAA Survey

Stream Name Caney Creek above tidal Site: 14
Date: 5/21/10 Time: 1014

b. Check the number of individuals observed at the site.
_ None X 1-10 _ 11-20 _ 20-50 _ greater than 50

c. Check the following that apply regarding the individuals proximity to the water body.
☐ Secondary touch: fishing, pets and related contact with water ☐ In a boat touching water
X Body on shore near water within 8 meters (25ft) of water ☐ Body well away from water between 8 and 30 meters (100 ft) N/A

2. If secondary contact recreation activities are not observed, describe the physical characteristics of the water body that may hinder the frequency of secondary contact (Attach photos, etc. for documentation).
Same as before

3. If secondary contact recreation activities are observed, how often do water recreational activities occur that do not involve a significant risk of water ingestion? frequently infrequently N/A
Please describe how often the activities occur? X Unknown Never Daily Monthly Yearly

4. If infrequently, what is the reason? physical characteristics of the water body limited public access
☐ other
If other, list reasons: N/A

5. Describe the physical characteristics of the water body that hinders the frequency of secondary contact recreation (depth, etc.) (Attach photos or depth measurements, etc. for documentation).
Same as before.

6. Describe why there is limited public access (e.g. lack of roads, river or stream banks overgrown, etc.) (Attach photos, maps, etc. for documentation).
stream banks overgrown except under the bridge

D. Noncontact Recreation Evaluation N/A

Noncontact recreation applies to water bodies where recreation activities do not involve a significant risk of water ingestion, and where primary and secondary contact recreation uses do not occur because of unsafe conditions, such as barge traffic.

1. Provide site-specific information and documentation (including photographs) regarding unsafe conditions, recreation activities, and presence or absence of water recreation activities.

Field Data Sheets – Basic RUAA Survey

Stream Name Caney Creek above tidal Site: 14
Date: 5/21/10 FDS Page 3 of 8 Time: 10:14 –

E. Stream Channel and Substantial Pools
Please check the following which best describes the river or stream: ☐ Wadeable ☒ Non-wadeable

1. Wadeable Streams
Determine whether or not the average depth at the thalweg is greater than 0.5 meters and if there are substantial pools with a depth of 1 meter or greater. Walk an approximately 300 meter reach (total) at the site and take the following measurements within the 300 meter reach. Measurements should be taken during base flow conditions (sustained or typical dry, warm-weather flows between rainfall events, excluding unusual antecedent conditions of drought or wet weather

Also, take photos facing upstream, downstream, left bank, and right bank at the ~~30 meters, 150 meters~~, and 300 meters. NES
Photos #s (30 meters) Upstream____ Downstream____ Left Bank ____ Right Bank____
Photos #s (150 meters) Upstream ✓ Downstream ✓ Left Bank ✓ Right Bank ✓ @ ~82 m
Photos #s (300 meters) Upstream ✓ Downstream ✓ Left Bank ✓ Right Bank ✓

~~a) Substantial~~ pools - Measure the length of each pool (if > 10 pools only measure 10 pools), the width (at the widest point), and the deepest depth. A substantial pool is considered a pool greater than 10 meters in length for the purposes of a Basic RUAA Survey. If depth and/or width measurements were not attainable, explain why.

	Length (meters)	Width (meters)	Depth (meters)
Pool 1			
Pool 2			
Pool 3			
Pool 4			
Pool 5			
Pool 6			
Pool 7			
Pool 8			
Pool 9			
Pool 10			

b)Average depth at the thalweg –Take depth measurements approximately every 30 meters to calculate an average depth at the thalweg (at least 10 measurements needed). If depth and/or width measurements were not attainable, explain why.

Distance	Depth (meters)
30 meters	
60 meters	
90 meters	
120 meters	
150 meters	
180 meters	
210 meters	
240 meters	
270 meters	
300 meters	
Average	

Field Data Sheets – Basic RUAA Survey

Stream Name Caney Creek above tidal Site: 14
Date: 5/21/10 Time: 1014

c) Stream width - Measure (1) the width at one point which represents the typical average width of the 300 meter reach; (2) the width at the narrowest point of the stream within the 300 meter reach; and (3) the width at the widest point of the stream within the 300 meter reach.

Measurement Type	Width (meters)
Typical Average Width of 300 meter reach	
Width at narrowest point of the stream within 300 meter reach	
Width at the widest point of the stream within 300 meter reach	

d) Is there sufficient water within a 300 meter stream reach during base flow conditions to support primary contact recreation? ☐ Yes ☐ No
COMMENTS:

2. Non-wadeable Streams
If accessible, take 10 width measurements which represent typical widths of the 300 meter reach. If the water is too deep and not accessible record the estimated average width of the water body.

Also, take photos facing upstream, downstream, left bank, and right bank at .
Photos #s (30 meters) Upstream____ Downstream____ Left Bank ____ Right Bank____
Photos #s (150 meters) Upstream____ Downstream____ Left Bank ____ Right Bank____ @ ~ 82m
Photos #s (300 meters) Upstream____ Downstream____ Left Bank ____ Right Bank____

# Measurements	Width (meters)
1	
2	
3	
4	
5	18 5.4864
6	22 6.7056
7	10 3.0488
8	15 4.572
9	14 4.2672
10	44.2 ft 13.4722

could not reach due to vegetation on banks

1
31
27
14
10
82m.

Field Data Sheets – Basic RUAA Survey

Stream Name Caney Creek above tidal Site: 14
Date: 5/21/10 Time: 1014

F. Additional RUAA Information

1. Check the following activities observed over the site reach.

- ☐ Drinking or water in mouth
- ☐ Bathing
- ☐ Walking
- ☐ Jogging/running
- ☐ Bicycling
- ☒ Standing
- ☐ Sitting
- ☐ Lying down/sleeping
- ☐ Playing on shoreline
- ☐ Picnicking
- ☐ Motorcycle/ATV
- ☐ Hunting/Trapping
- ☐ Wildlife watching
- ☐ None
- ☐ Other: _____

2. Are there permanent or long-term hydrologic modifications that are constructed and operated in a way that affects the recreational uses? ☐ Yes ☒ No (If yes, please provide supporting documentation and photos.)
Comments: _____

3. Check any channel obstructions that apply (Attach photos).

- ☐ Culverts
- ☐ Barbed wire
- ☐ Utility pipe
- ☐ Fences
- ☐ Dams
- ☒ Other (specify): Debris
- ☒ Log jams
- ☐ Thick vegetation
- ☐ Rip rap
- ☐ Low bridges
- ☐ Water control structure
- ☐ None

4. Check all surrounding conditions that promote recreational activities (Attach photos of evidence or unusual items of interest).

- ☐ Campgrounds
- ☐ Playgrounds
- ☐ Rural area
- ☐ Residential
- ☐ National forests
- ☐ Urban/suburban location
- ☐ Golf Course
- ☐ Sports Field
- ☐ Stairs/walkway
- ☐ Boating access (ramps)
- ☐ Beach
- ☒ Bridge crossing
- ☐ Commercial boating
- ☐ Trails/paths (hiking/biking)
- ☐ Paved parking lot
- ☐ Unimproved parking lot
- ☒ Roads (paved/unpaved)
- ☐ Populated area
- ☐ Docks or rafts
- ☐ Commercial outfitter
- ☐ Nearby school
- ☐ Power Line Corridor
- ☐ Parks (national/city/county/state)
- ☐ Public Property
- ☐ Other: _____
- ☐ None of the Above

Comments: _____

5. Check all surrounding conditions that impede recreational activities (Attach photos of evidence or unusual items of interest).

- ☐ Private Property
- ☐ No trespass sign
- ☐ Wildlife
- ☒ Steep slopes
- ☐ No public access
- ☐ No roads
- ☐ Fence
- ☐ Barge/ship traffic
- ☐ Industrial
- ☐ None of the Above
- ☐ Other: _____

Comments: _____

6. Check any indications of human use (Attach photos).

- ☒ Roads
- ☐ Rope swings
- ☐ Dock/platform
- ☐ Foot paths/prints
- ☐ Other: _____
- ☐ RV/ATV Tracks
- ☐ Camping Sites
- ☐ Fire pit/ring
- ☐ Fishing Tackle
- ☐ NPDES Discharge
- ☐ Gates on corridor
- ☐ Children's toys
- ☐ Remnant's of Kid's play
- ☐ Organized event
- ☐ No Human Presence

Comments: _____

Field Data Sheets – Basic RUAA Survey

Stream Name Caney Creek above tidal Site: 14
Date: 5/21/10 Time: 1014

7. Check all water characteristics that apply (Attach photos).
Aquatic Vegetation: absent rare X common abundant
Algae Cover: X absent rare common abundant
Odor: none X rare common abundant
Color: clear green red X brown black
Bottom Deposit: sludge solids X fine sediments none other
Water Surface: clear scum foam X debris oil
Other: debri under the water

8. Vertebrates Observed within 300 meter reach
Snakes None X slight presence moderate presence large presence
Water Dependent Birds X None slight presence moderate presence large presence
Alligators X None slight presence moderate presence large presence
Comments:

9. Mammals Observed within 300 meter reach
Wild X None slight presence moderate presence large presence
Domesticated Pets X None slight presence moderate presence large presence
Livestock X None slight presence moderate presence large presence
Feral Hogs X None slight presence moderate presence large presence
Comments:

10. Evidence of wild animals or evidence of birds, cattle, hogs, etc.
Tracks Fecal droppings X Bird nests under the bridge

11. Garbage Observed
Large garbage in the channel None Rare X Common Abundant
Small garbage in the channel None Rare X Common Abundant
Bank Garbage None Rare X Common Abundant
Briefly describe the kinds of garbage observed: bones appliances in water, plastic bottles, glass bottles,

12. Is the site located in a wildlife preserve with large wildlife (i.e waterfowl) population? Yes X No

13. Please document any other relevant information regarding recreational activities and the water body in general (for example, area outside of the stream reach evaluated).
NA
lot of debri in water, creating eddy for during low, unable to access 300m thick vegetation.

Field Data Sheet - Basic RUAA Survey

Stream Flow (Discharge) Measurement

Stream: Caney Creek above tidal — Date: 05/21/10

Site: 14 — Site

Description: Old Van Vleck Rd @ Caney Creek

Time Begin: 10:42 — Time End: 12:19 — Meter Type: Sontek Flowtracker

Observers: P. Lokanath, K. Condia — Stream Width*: 45.2 — Section Width (W): 2.21

Observations:

	Section Midpoint (ft)(m)	Section Depth (ft)(m) (cm) (D)	Observational Depth** (ft)(m)	Velocity (V) At Point (ft/s)(m/s)	Velocity (V) Average (ft/s)(m/s)	Flow (Q) (m^3/s) (ft^3/s) Q = (W)(D)(V)
1	1.105	0.3			0.00	0.000
2	3.31	0.5			-0.00	0.000
3	5.52	1.05			0.06	0.139
4	7.73	1.50			0.02	0.066
5	9.94	2.15			0.82	3.896
6	12.15	2.6	1.3 5.2	0.34 1.02	0.85	4.884
7	14.36	2.9	1.45 5.8	~~0.26~~ 0.14 ~~0.70~~ 1.0	0.64	4.243
8	16.57	3.0	1.5 6.0	0.25 0.85	0.68	4.475
9	18.78	3.0	1.5 6.0	0.43 0.85	?? 0.86	5.669
10	20.99	3.0	1.5 6.0	0.74 1.02	1.25	7.735
11	23.2	2.8	1.4 5.6	0.68 1.11	1.24	7.369
12	25.41	2.7	1.35 5.4	0.79 1.19	1.39	7.346
13	27.62	2.4			0.77	4.084
14	29.83	2.4			0.85	4.508
15	32.04	2.35			0.81	4.207
16	34.25	1.5			0.23	0.762
17	36.46	1.0			0.07	0.155
18	38.67	0.85			0.04	0.075
19	40.88	0.70			-0.00	0.000
20	43.09	0.50			0.08	0.088

} lot of Debri large Debri

KC 10/28/10

total Q = ~~53.038~~ cfs

59.703

Field Data Sheets – Basic RUAA Survey

Stream Name Caney Creek above tidal Site: 15
Date: 5/24/10 Time: 1245

B. Primary Contact Water Recreation Evaluation:
- Primary contact recreation draft definition: Water recreation activities, such as wading by children, swimming, water skiing, diving, tubing, surfing, and whitewater kayaking, canoeing, and rafting, involving a significant risk of ingestion of water.

1. Were water recreation activities that involve a significant risk of ingestion (full body immersion) observed at this site?
☐ Yes ☑ No primary contact recreation activities were observed

a. Check the following boxes of primary contact recreation activities observed at the time of the sampling event at the site (Attach photos of the activities or lack of activities).

☐ Wading-Children ☐ Tubing ☑ No primary contact activities that commonly occur were observed
☐ Wading-Adults ☐ Surfing
☐ Swimming ☐ Whitewater-kayaking, canoeing, rafting
☐ Water skiing ☐ Other: _____
☐ Diving ☐ frequent public swimming-created by publicly owned land or commercial operations

b. Check the number of individuals observed at the site: ☑ None ☐ 1-10 ☐ 11-20 ☐ 20-50 ☐ greater than 50

c. Check the following that apply regarding the individuals proximity to the water body.
☐ Water in mouth or nose of the individual ☐ Primary touch: Individual's body (or portion) immersed in water
☐ Secondary touch: fishing, pets and related contact with water ☐ Individual is in a boat touching water
☐ Individual is on shore near water within 8 meters (25ft) of water ☐ Individual is well away from water between 8 and 30 meters (100 ft) ☑ Not applicable

2. If primary contact recreation activities are not observed, describe the physical characteristics of the water body that may hinder the frequency of primary contact (depth, etc.) (Attach photos, etc. for documentation).
Steep bank slopes, water depth, heavy vegetation on banks

3. Describe if there is public access (e.g. parks, roads, etc.) (Attach photos, maps, etc. for documentation).
Drive off of the ~~to~~ road, park in the ditch, concrete slopes under the bridge

4. Is an area with primary contact recreation activities or a bathing beach (e.g. state/local parks with swimming, etc.) located near (e.g. within 5 miles upstream and downstream) this site? ~~N/A~~ NO

C. Secondary Contact Water Recreation Evaluation:
- Secondary contact recreation 1: Water recreation activities, such as fishing, commercial and recreational boating, and limited body contact incidental to shoreline activity, not involving a significant risk of water ingestion and that commonly occur.
- Secondary contact recreation 2: Water recreation activities, such as fishing, commercial and recreational boating, and limited body contact incidental to shoreline activity, not involving a significant risk of water ingestion but that occur less frequently than for secondary contact recreation 1 due to (1) physical characteristics of the water body and/or (2) limited public access.

1. Were water recreation activities observed at the site, but the nature of the recreation does not involve a significant risk of ingestion (e.g. secondary contact recreation activities)? ☐ Yes ☒ No secondary contact recreation activities were observed

a. Check the following boxes of secondary contact recreation activities that were observed at the time of the sampling event at the site (Attach photos of activities or lack of activities).
☐ Fishing
☐ Boating-commercial, recreational
☐ Non-whitewater-kayaking, rafting, canoeing
☑ No secondary contact recreation activities were observed
☐ Other secondary contact activities: _____

Field Data Sheets – Basic RUAA Survey

Stream Name Caney Creek above tidal Site: 15
Date: 5/22/10 Time: 1245

b. Check the number of individuals observed at the site.
X None _ 1-10 _ 11-20 _ 20-50 _ greater than 50

c. Check the following that apply regarding the individuals proximity to the water body.
☐ Secondary touch: fishing, pets and related contact with water ☐ In a boat touching water
☐ Body on shore near water within 8 meters (25ft) of water ☐ Body well away from water between 8 and 30 meters (100 ft) N/A

2. If secondary contact recreation activities are not observed, describe the physical characteristics of the water body that may hinder the frequency of secondary contact (Attach photos, etc. for documentation).
Same as before

3. If secondary contact recreation activities are observed, how often do water recreational activities occur that do not involve a significant risk of water ingestion? frequently infrequently NA
Please describe how often the activities occur? X Unknown Never Daily Monthly Yearly

4. If infrequently, what is the reason? physical characteristics of the water body limited public access
☐ other
If other, list reasons: N/A

5. Describe the physical characteristics of the water body that hinders the frequency of secondary contact recreation (depth, etc.) (Attach photos or depth measurements, etc. for documentation).
Same as before

6. Describe why there is limited public access (e.g. lack of roads, river or stream banks overgrown, etc.) (Attach photos, maps, etc. for documentation).
Same as before.

D. Noncontact Recreation Evaluation

Noncontact recreation applies to water bodies where recreation activities do not involve a significant risk of water ingestion, and where primary and secondary contact recreation uses do not occur because of unsafe conditions, such as barge traffic.

1. Provide site-specific information and documentation (including photographs) regarding unsafe conditions, recreation activities, and presence or absence of water recreation activities.
Water depth > 1.2 m ( ), alligator in water, moderately steep banks, thick vegetation upstream & downstream of bridge.

Field Data Sheets – Basic RUAA Survey

Stream Name Caney Creek above tidal Site: 15
Date: 5/21/10 ~~FDS Page 3 of 8~~ Time: 1245

E. Stream Channel and Substantial Pools
Please check the following which best describes the river or stream: ☐ Wadeable ☒ Non-wadeable

1. Wadeable Streams N/A
Determine whether or not the average depth at the thalweg is greater than 0.5 meters and if there are substantial pools with a depth of 1 meter or greater. Walk an approximately 300 meter reach (total) at the site and take the following measurements within the 300 meter reach. Measurements should be taken during base flow conditions (sustained or typical dry, warm-weather flows between rainfall events, excluding unusual antecedent conditions of drought or wet weather

Also, take photos facing upstream, downstream, left bank, and right bank at the 30 meters, 150 meters, and 300 meters.
Photos #s (30 meters) Upstream____ Downstream____ Left Bank ____ Right Bank____
Photos #s (150 meters) Upstream____ Downstream____ Left Bank ____ Right Bank____
Photos #s (300 meters) Upstream____ Downstream____ Left Bank ____ Right Bank____

a) Substantial pools - Measure the length of each pool (if > 10 pools only measure 10 pools), the width (at the widest point), and the deepest depth. A substantial pool is considered a pool greater than 10 meters in length for the purposes of a Basic RUAA Survey. If depth and/or width measurements were not attainable, explain why.

	Length (meters)	Width (meters)	Depth (meters)
Pool 1			
Pool 2			
Pool 3			
Pool 4			
Pool 5			
Pool 6			
Pool 7			
Pool 8			
Pool 9			
Pool 10			

b)Average depth at the thalweg –Take depth measurements approximately every 30 meters to calculate an average depth at the thalweg (at least 10 measurements needed). If depth and/or width measurements were not attainable, explain why.

Distance	Depth (meters)
30 meters	
60 meters	
90 meters	
120 meters	
150 meters	
180 meters	
210 meters	
240 meters	
270 meters	
300 meters	
Average	

Field Data Sheets – Basic RUAA Survey

Stream Name Caney Creek above tidal Site: 15
Date: 5/21/10 Time: 1245

c) Stream width - Measure (1) the width at one point which represents the typical average width of the 300 meter reach; (2) the width at the narrowest point of the stream within the 300 meter reach; and (3) the width at the widest point of the stream within the 300 meter reach.

Measurement Type	Width (meters)
Typical Average Width of 300 meter reach	
Width at narrowest point of the stream within 300 meter reach	
Width at the widest point of the stream within 300 meter reach	

d) Is there sufficient water within a 300 meter stream reach during base flow conditions to support primary contact recreation? ☒ Yes ☐ No
COMMENTS:

2. Non-wadeable Streams
If accessible, take 10 width measurements which represent typical widths of the 300 meter reach. If the water is too deep and not accessible record the estimated average width of the water body.

Also, take photos facing upstream, downstream, left bank, and right bank at . @ bridge
Photos #s (30 meters) Upstream____ Downstream____ Left Bank ____ Right Bank____
Photos #s (150 meters) Upstream____ Downstream____ Left Bank ____ Right Bank____
Photos #s (300 meters) Upstream____ Downstream____ Left Bank ____ Right Bank____

# Measurements	Width (meters)
1	
2	
3	
4	
5	
6	
7	
8	
9	
10	

Comments

Depth :- Downstream side of bridge 1.25m.

able to see upstream = 41m

~~up~~ downstream = 38m (thick vegetation) ~~and~~

bridge width 25m.

Field Data Sheets – Basic RUAA Survey

Stream Name Caney Creek above tidal Site: 15
Date: 5/21/10 Time: 1245

F. Additional RUAA Information

1. Check the following activities observed over the site reach.

- ☐ Drinking or water in mouth
- ☐ Bathing
- ☐ Walking
- ☐ Jogging/running
- ☐ Bicycling
- ☐ Standing
- ☐ Sitting
- ☐ Lying down/sleeping
- ☐ Playing on shoreline
- ☐ Picnicking
- ☐ Motorcycle/ATV
- ☐ Hunting/Trapping
- ☐ Wildlife watching
- ☒ None
- ☐ Other: _____

2. Are there permanent or long-term hydrologic modifications that are constructed and operated in a way that affects the recreational uses? ☐ Yes ☒ No (If yes, please provide supporting documentation and photos.)
Comments: _____

3. Check any channel obstructions that apply (Attach photos).

- ☐ Culverts
- ☐ Barbed wire
- ☐ Utility pipe
- ☐ Fences
- ☐ Dams
- ☐ Other (specify): _____
- ☒ Log jams
- ☐ Thick vegetation
- ☐ Rip rap
- ☐ Low bridges
- ☐ Water control structure
- ☐ None

4. Check all surrounding conditions that promote recreational activities (Attach photos of evidence or unusual items of interest).

- ☐ Campgrounds
- ☐ Playgrounds
- ☐ Rural area
- ☐ Residential
- ☐ National forests
- ☐ Urban/suburban location
- ☐ Golf Course
- ☐ Sports Field
- ☐ Stairs/walkway
- ☐ Boating access (ramps)
- ☐ Beach
- ☒ Bridge crossing
- ☐ Commercial boating
- ☐ Trails/paths (hiking/biking)
- ☐ Paved parking lot
- ☐ Unimproved parking lot
- ☒ Roads (paved/unpaved)
- ☐ Populated area
- ☐ Docks or rafts
- ☐ Commercial outfitter
- ☐ Nearby school
- ☐ Power Line Corridor
- ☐ Parks (national/city/county/state)
- ☐ Public Property
- ☐ Other: _____
- ☐ None of the Above

Comments: _____

5. Check all surrounding conditions that impede recreational activities (Attach photos of evidence or unusual items of interest).

- ☐ Private Property
- ☐ No trespass sign
- ☐ Wildlife
- ☒ Steep slopes
- ☐ No public access
- ☐ No roads
- ☒ Fence bank both upstream / downstream
- ☐ Barge/ship traffic
- ☐ Industrial
- ☐ None of the Above
- ☐ Other: _____

Comments: _____

6. Check any indications of human use (Attach photos).

- ☒ Roads
- ☐ Rope swings
- ☐ Dock/platform
- ☐ Foot paths/prints
- ☐ Other: _____
- ☐ RV/ATV Tracks
- ☐ Camping Sites
- ☐ Fire pit/ring
- ☐ Fishing Tackle
- ☐ NPDES Discharge
- ☐ Gates on corridor
- ☐ Children's toys
- ☐ Remnant's of Kid's play
- ☐ Organized event
- ☐ No Human Presence

Comments: graffiti on the wall - under bridge R bank

Field Data Sheets – Basic RUAA Survey

Stream Name Caney Creek above tidal Site: 15
Date: 5/21/10 Time: 1245

7. Check all water characteristics that apply (Attach photos).

Aquatic Vegetation: ☐ absent ☒ rare ☐ common ☐ abundant
Algae Cover: ☒ absent ☐ rare ☐ common ☐ abundant
Odor: ☒ none ☐ rare ☐ common ☐ abundant
Color: ☐ clear ☐ green ☐ red ☒ brown ☐ black
Bottom Deposit: ☐ sludge ☐ solids ☒ fine sediments ☐ none ☐ other
Water Surface: ☒ clear ☐ scum ☐ foam ☐ debris ☐ oil
Other:

8. Vertebrates Observed within 300 meter reach

Snakes	☒ None	☐ slight presence	☐ moderate presence	☐ large presence
Water Dependent Birds	☒ None	☐ slight presence	☐ moderate presence	☐ large presence
Alligators	☐ None	☒ slight presence	☐ moderate presence	☐ large presence

Comments: 1 alligator

9. Mammals Observed within 300 meter reach

Wild	☒ None	☐ slight presence	☐ moderate presence	☐ large presence
Domesticated Pets	☒ None	☐ slight presence	☐ moderate presence	☐ large presence
Livestock	☒ None	☐ slight presence	☐ moderate presence	☐ large presence
Feral Hogs	☒ None	☐ slight presence	☐ moderate presence	☐ large presence

Comments:

10. Evidence of wild animals or evidence of birds, cattle, hogs, etc.
☐ Tracks ☐ Fecal droppings ☒ Bird nests under bridge.

11. Garbage Observed

Large garbage in the channel	☐ None	☒ Rare	☐ Common	☐ Abundant
Small garbage in the channel	☐ None	☒ Rare	☐ Common	☐ Abundant
Bank Garbage	☐ None	☐ Rare	☒ Common	☐ Abundant

Briefly describe the kinds of garbage observed: beer bottles, plastic bottles & cups on the bank, tire, plastic bottles in the water

12. Is the site located in a wildlife preserve with large wildlife (i.e waterfowl) population? ☐ Yes ☒ No

13. Please document any other relevant information regarding recreational activities and the water body in general (for example, area outside of the stream reach evaluated).
The water was deeper than 1.2m ( ) alligator in on water the bank. moderately steep bank slopes (concreted). banks fenced off both up & downstream.

Field Data Sheet - Basic RUAA Survey

Stream Flow (Discharge) Measurement

Stream: Caney Creek above tidal Date: 5/21/10

Site: 15 Site

Description: SH 35 @ Caney Creek

Time Begin: 1245 Time End: _____ Meter Type: Sontek Flowtracker

Observers: _____ Stream Width*: _____ Section Width (W): _____

Observations: _____

flows similar to site 16 14

Section Midpoint (ft) (m)	Section Depth (ft) (m) (cm) (D)	Observational Depth** (ft)(m)	Velocity (V)		Flow (Q) (m^3/s) (ft^3/s) Q = (W)(D)(V)
			At Point (ft/s)(m/s)	Average (ft/s)(m/s)	

Site 14 Total Q = 59.703 cf/s

Field Data Sheets – Basic RUAA Survey

(should be completed for each site)

Data Collectors & Contact Information:	P. Lokanath, K. Condra, M. Shepard
Date & Time: 05/21/10 13:30 – 14:10	County Name: Matagorda
Stream Name:	Caney Creek above Tidal
Segment No. or nearest downstream Segment No.:	1305
Description of Site:	#16 – Allenhurst Rd

At any point during the Basic RUAA Survey it becomes apparent that primary contact recreation is clearly the use for the water body the investigator should stop conducting the UAA.

A. Stream Characteristics:

1. Check the following channel flow status that applies.

☐ dry ☐ no flow ☐ low ☐ normal ☒ high ☐ flooded

2. Check the following stream type that applies on the day of the survey:

Ephemeral: A stream which flows only during or immediately after a rainfall event, and contains no refuge pools capable of sustaining a viable community of aquatic organisms.

☐ Intermittent: A stream which has a period of zero flow for at least one week during most years. Where flow records are available, a stream with a 7Q2 flow of less than 0.1 cubic feet per second is considered intermittent.

☐ Intermittent w/ perennial pools: An intermittent stream which maintains persistent pools even when flow in the stream is less than 0.1 cubic feet per second.

☒ Perennial: A stream which flows continuously throughout the year. Perennial streams have a 7Q2 equal to or greater than 0.1 cubic feet per second.

☐ Designated or unclassified tidal stream: A stream that is tidally influenced. If you checked this box, you will need to contact the Water Quality Standards Group and evaluate whether or not a bathing beach is located along the tidal stream and whether or not a bathing beach is located along the estuary, bay or Gulf water that the tidal stream flows into.

3. Streamflow

Use USGS gage data (if a gage is located at a site or within a quarter mile of a site) or use the Stream Flow (Discharge) Measurement Form and follow the procedures outlined in the most recent TCEQ Surface Water Quality Monitoring Procedures, Volume 1, RG-415. If USGS gage data is used for a site, include that information as an attachment and list the streamflow on the sampling date below. If the stream flow taken at one site is representative of the flow at another site(s), then that flow can be used as the observed flow and should be documented below. If the stream flow measured at one site is different from another site, then stream flow should be taken at both sites. ≥59.703 cfs

4. Water Quality Data (Field Parameters) * Flow similar to Site 14 but possibly greater

Field parameters should be collected in accordance with the procedures outlined in the most recent TCEQ Surface Water Quality Monitoring Procedures, Volume 1.

Air Temp 32 °C Water Temp 26 °C Secchi 0.180 m

5. Riparian Zone (Mark dominant categories with L (Left Bank) and R (Right Bank). Bank orientation is determined by the investigator facing downstream.)

	Forest		Urban		Rip rap
RL	Shrub dominated corridor	R	Pasture		Concrete
	Herbaceous marsh		Row crops	Other (specify):	Left bank → Trailers residential
	Mowed/maintained corridor		Denuded/Eroded bank		

6. Ease of bank access to the water body: ☐ Easy ☐ Moderately easy ☒ Moderately difficult ☐ Difficult

7. Please describe access opportunities or explain why the site is not easily accessible (Attach photos for documentation):

Steep slopes, thick bridge crossing, pull off of road & park on the ditch

8. Dominant Primary Substrate

☐ Cobble ☐ Sand ☒ Silt ☐ Mud/Clay ☐ Gravel ☐ Bedrock ☐ Rip rap ☐ Concrete

QAPP E PL

Field Data Sheets – Basic RUAA Survey

Stream Name Caney Creek (1305) Site: #16
Date: 5/21/10 Time: 1330

B. Primary Contact Water Recreation Evaluation:
- Primary contact recreation draft definition: Water recreation activities, such as wading by children, swimming, water skiing, diving, tubing, surfing, and whitewater kayaking, canoeing, and rafting, involving a significant risk of ingestion of water.

1. Were water recreation activities that involve a significant risk of ingestion (full body immersion) observed at this site?
☐ Yes ☒ No primary contact recreation activities were observed
a. Check the following boxes of primary contact recreation activities observed at the time of the sampling event at the site (Attach photos of the activities or lack of activities).

☐ Wading-Children	☐ Tubing	☒ No primary contact activities that commonly occur were observed
☐ Wading-Adults	☐ Surfing	
☐ Swimming	☐ Whitewater-kayaking, canoeing, rafting	
☐ Water skiing	☐ Other: _____	
☐ Diving	☐ frequent public swimming-created by publicly owned land or commercial operations	

b. Check the number of individuals observed at the site: ☒ None ☐ 1-10 ☐ 11-20 ☐ 20-50 ☐ greater than 50

c. Check the following that apply regarding the individuals proximity to the water body.
☐ Water in mouth or nose of the individual ☐ Primary touch: Individual's body (or portion) immersed in water
☐ Secondary touch: fishing, pets and related contact with water ☐ Individual is in a boat touching water
☐ Individual is on shore near water within 8 meters (25ft) of water ☐ Individual is well away from water between 8 and 30 meters (100 ft) ☒ Not applicable

2. If primary contact recreation activities are not observed, describe the physical characteristics of the water body that may hinder the frequency of primary contact (depth, etc.) (Attach photos, etc. for documentation).
Steep slopes, high water level, lot of debri in water, thick vegetation all along bank, &

3. Describe if there is public access (e.g. parks, roads, etc.) (Attach photos, maps, etc. for documentation).
bridge crossing.

4. Is an area with primary contact recreation activities or a bathing beach (e.g. state/local parks with swimming, etc.) located near (e.g. within 5 miles upstream and downstream) this site?
NO ~~N/A~~

C. Secondary Contact Water Recreation Evaluation:
- Secondary contact recreation 1: Water recreation activities, such as fishing, commercial and recreational boating, and limited body contact incidental to shoreline activity, not involving a significant risk of water ingestion and that commonly occur.
- Secondary contact recreation 2: Water recreation activities, such as fishing, commercial and recreational boating, and limited body contact incidental to shoreline activity, not involving a significant risk of water ingestion but that occur less frequently than for secondary contact recreation 1 due to (1) physical characteristics of the water body and/or (2) limited public access.

1. Were water recreation activities observed at the site, but the nature of the recreation does not involve a significant risk of ingestion (e.g. secondary contact recreation activities)? ☐ Yes ☒ No secondary contact recreation activities were observed
a. Check the following boxes of secondary contact recreation activities that were observed at the time of the sampling event at the site (Attach photos of activities or lack of activities).
☐ Fishing
☐ Boating-commercial, recreational
☐ Non-whitewater-kayaking, rafting, canoeing
☒ No secondary contact recreation activities were observed
☐ Other secondary contact activities: _____

Field Data Sheets – Basic RUAA Survey

Stream Name Caney Creek (1305) Site: #14
Date: 5/21/10 Time: 1330

b. Check the number of individuals observed at the site.
X None ☐ 1-10 ☐ 11-20 ☐ 20-50 ☐ greater than 50

c. Check the following that apply regarding the individuals proximity to the water body.
☐ Secondary touch: fishing, pets and related contact with water ☐ In a boat touching water
☐ Body on shore near water within 8 meters (25ft) of water ☐ Body well away from water between 8 and 30 meters (100 ft) N/A

2. If secondary contact recreation activities are not observed, describe the physical characteristics of the water body that may hinder the frequency of secondary contact (Attach photos, etc. for documentation).
Same as before

3. If secondary contact recreation activities are observed, how often do water recreational activities occur that do not involve a significant risk of water ingestion? ☐ frequently ☐ infrequently N/A
Please describe how often the activities occur? X Unknown ☐ Never ☐ Daily ☐ Monthly ☐ Yearly

4. If infrequently, what is the reason? ☐ physical characteristics of the water body ☐ limited public access ☐ other
If other, list reasons: N/A

5. Describe the physical characteristics of the water body that hinders the frequency of secondary contact recreation (depth, etc.) (Attach photos or depth measurements, etc. for documentation).
Same as before.

6. Describe why there is limited public access (e.g. lack of roads, river or stream banks overgrown, etc.) (Attach photos, maps, etc. for documentation).
steep banks, thick bank vegetation

D. Noncontact Recreation Evaluation

Noncontact recreation applies to water bodies where recreation activities do not involve a significant risk of water ingestion, and where primary and secondary contact recreation uses do not occur because of unsafe conditions, such as barge traffic.

1. Provide site-specific information and documentation (including photographs) regarding unsafe conditions, recreation activities, and presence or absence of water recreation activities.
High water, thick vegetation along the bank, moderately steep slopes,

Field Data Sheets – Basic RUAA Survey

Stream Name Caney Creek (1305) Site: #16
Date: 5/21/10 FDS Page 3 of 8 1330

E. Stream Channel and Substantial Pools
Please check the following which best describes the river or stream: ☐ Wadeable ☒ Non-wadeable

1. Wadeable Streams N/A
Determine whether or not the average depth at the thalweg is greater than 0.5 meters and if there are substantial pools with a depth of 1 meter or greater. Walk an approximately 300 meter reach (total) at the site and take the following measurements within the 300 meter reach. Measurements should be taken during base flow conditions (sustained or typical dry, warm-weather flows between rainfall events, excluding unusual antecedent conditions of drought or wet weather

Also, take photos facing upstream, downstream, left bank, and right bank at the 30 meters, 150 meters, and 300 meters.
Photos #s (30 meters) Upstream____ Downstream____ Left Bank ____ Right Bank____
Photos #s (150 meters) Upstream____ Downstream____ Left Bank ____ Right Bank____
Photos #s (300 meters) Upstream____ Downstream____ Left Bank ____ Right Bank____

a) Substantial pools - Measure the length of each pool (if > 10 pools only measure 10 pools), the width (at the widest point), and the deepest depth. A substantial pool is considered a pool greater than 10 meters in length for the purposes of a Basic RUAA Survey. If depth and/or width measurements were not attainable, explain why.

	Length (meters)	Width (meters)	Depth (meters)
Pool 1			
Pool 2			
Pool 3			
Pool 4			
Pool 5			
Pool 6			
Pool 7			
Pool 8			
Pool 9			
Pool 10			

b)Average depth at the thalweg –Take depth measurements approximately every 30 meters to calculate an average depth at the thalweg (at least 10 measurements needed). If depth and/or width measurements were not attainable, explain why.

Distance	Depth (meters)
30 meters	
60 meters	
90 meters	
120 meters	
150 meters	
180 meters	
210 meters	
240 meters	
270 meters	
300 meters	
Average	

Field Data Sheets – Basic RUAA Survey

Stream Name Caney Creek (1305) Site: #16
Date: Time:

c) Stream width - Measure (1) the width at one point which represents the typical average width of the 300 meter reach; (2) the width at the narrowest point of the stream within the 300 meter reach; and (3) the width at the widest point of the stream within the 300 meter reach.

Measurement Type	Width (meters)
Typical Average Width of 300 meter reach	
Width at narrowest point of the stream within 300 meter reach	
Width at the widest point of the stream within 300 meter reach	

d) Is there sufficient water within a 300 meter stream reach during base flow conditions to support primary contact recreation? ☒ Yes ☐ No
COMMENTS:

2. Non-wadeable Streams
If accessible, take 10 width measurements which represent typical widths of the 300 meter reach. If the water is too deep and not accessible record the estimated average width of the water body.

Also, take photos facing upstream, downstream, left bank, and right bank at .
Photos #s (30 meters) Upstream ✓✓ Downstream ✓✓ Left Bank ✓✓ Right Bank ✓✓✓
Photos #s (150 meters) Upstream____ Downstream____ Left Bank ____ Right Bank____
Photos #s (300 meters) Upstream____ Downstream____ Left Bank ____ Right Bank____

# Measurements	Width (meters)
1	23
2	33
3	
4	
5	
6	
7	
8	
9	
10	

depth ~1.5m

- could not wade or walk up/down too high water & thick vegetation on banks

could see 71 m upstream
35m downstream
bridge 11m across

Total 117m

Field Data Sheets – Basic RUAA Survey

Stream Name Caney Creek (1305) Site: #16
Date: 5/21/10 Time: 1330

F. Additional RUAA Information

1. Check the following activities observed over the site reach.

- ☐ Drinking or water in mouth
- ☐ Bathing
- ☐ Walking
- ☐ Jogging/running
- ☐ Bicycling
- ☐ Standing
- ☐ Sitting
- ☐ Lying down/sleeping
- ☐ Playing on shoreline
- ☐ Picnicking
- ☐ Motorcycle/ATV
- ☐ Hunting/Trapping
- ☐ Wildlife watching
- ☒ None
- ☐ Other: _____

2. Are there permanent or long-term hydrologic modifications that are constructed and operated in a way that affects the recreational uses? ☐ Yes ☒ No (If yes, please provide supporting documentation and photos.)
Comments: _____

3. Check any channel obstructions that apply (Attach photos).

- ☐ Culverts
- ☐ Barbed wire
- ☐ Utility pipe
- ☐ Fences
- ☐ Dams
- ☐ Other (specify): _____
- ☒ Log jams
- ☐ Thick vegetation
- ☐ Rip rap
- ☐ Low bridges
- ☐ Water control structure
- ☐ None

4. Check all surrounding conditions that promote recreational activities (Attach photos of evidence or unusual items of interest).

- ☐ Campgrounds
- ☐ Playgrounds
- ☒ Rural area
- ☒ Residential
- ☐ National forests
- ☐ Urban/suburban location
- ☐ Golf Course
- ☐ Sports Field
- ☐ Stairs/walkway
- ☐ Boating access (ramps)
- ☐ Beach
- ☒ Bridge crossing
- ☐ Commercial boating
- ☐ Trails/paths (hiking/biking)
- ☐ Paved parking lot
- ☐ Unimproved parking lot
- ☒ Roads (paved/unpaved)
- ☐ Populated area
- ☐ Docks or rafts
- ☐ Commercial outfitter
- ☐ Nearby school
- ☐ Power Line Corridor
- ☐ Parks (national/city/county/state)
- ☐ Public Property
- ☐ Other: _____
- ☐ None of the Above

Comments: _____

5. Check all surrounding conditions that impede recreational activities (Attach photos of evidence or unusual items of interest).

- ☒ Private Property
- ☐ No trespass sign
- ☐ Wildlife
- ☒ Steep slopes
- ☐ No public access
- ☐ No roads
- ☒ Fence on bank
- ☐ Barge/ship traffic
- ☐ Industrial
- ☐ None of the Above
- ☐ Other: _____

Comments: _____

6. Check any indications of human use (Attach photos).

- ☒ Roads
- ☐ Rope swings
- ☐ Dock/platform
- ☐ Foot paths/prints
- ☐ Other: _____
- ☐ RV/ATV Tracks
- ☐ Camping Sites
- ☐ Fire pit/ring
- ☐ Fishing Tackle
- ☐ NPDES Discharge
- ☐ Gates on corridor
- ☐ Children's toys
- ☐ Remnant's of Kid's play
- ☐ Organized event
- ☐ No Human Presence

Comments: _____

Field Data Sheets – Basic RUAA Survey

Stream Name Caney Creek (1305) Site: #16
Date: 5/21/10 Time: 1330

7. Check all water characteristics that apply (Attach photos).
Aquatic Vegetation: ☐ absent ☒ rare ☐ common ☐ abundant
Algae Cover: ☒ absent ☐ rare ☐ common ☐ abundant
Odor: ☐ none ☒ rare ☐ common ☐ abundant
Color: ☐ clear ☐ green ☐ red ☒ brown ☐ black
Bottom Deposit: ☐ sludge ☐ solids ☒ fine sediments ☐ none ☐ other
Water Surface: ☒ clear ☐ scum ☐ foam ☐ debris ☐ oil
Other:

8. Vertebrates Observed within 300 meter reach
Snakes ☒ None ☐ slight presence ☐ moderate presence ☐ large presence
Water Dependent Birds ☒ None ☐ slight presence ☐ moderate presence ☐ large presence
Alligators ☒ None ☐ slight presence ☐ moderate presence ☐ large presence
Comments:

9. Mammals Observed within 300 meter reach
Wild ☒ None ☐ slight presence ☐ moderate presence ☐ large presence
Domesticated Pets ☐ None ☒ slight presence ☐ moderate presence ☐ large presence (1)
Livestock ☒ None ☐ slight presence ☐ moderate presence ☐ large presence
Feral Hogs ☒ None ☐ slight presence ☐ moderate presence ☐ large presence
Comments:

10. Evidence of wild animals or evidence of birds, cattle, hogs, etc.
☐ Tracks ☐ Fecal droppings ☐ Bird nests NA

11. Garbage Observed
Large garbage in the channel ☒ None ☐ Rare ☐ Common ☐ Abundant Cannot see any*
Small garbage in the channel ☒ None ☐ Rare ☐ Common ☐ Abundant "
Bank Garbage ☐ None ☒ Rare ☐ Common ☐ Abundant
Briefly describe the kinds of garbage observed: food wrappers

12. Is the site located in a wildlife preserve with large wildlife (i.e waterfowl) population? ☐ Yes ☒ No

13. Please document any other relevant information regarding recreational activities and the water body in general (for example, area outside of the stream reach evaluated).

Field Data Sheet - Basic RUAA Survey

Stream Flow (Discharge) Measurement

Stream: Caney Creek above Tidal (1305) Date: 5/21/10

Site: #16 Site

Description: Allenhurst Rd

Time Begin: 1330 Time End: _____ Meter Type: SonTek Flowtracker

Observers: _____ Stream Width*: _____ Section Width (W): _____

Observations: _____

Section Midpoint (ft) (m)	Section Depth (ft) (m) (cm) (D)	Observational Depth** (ft)(m)	Velocity (V)		Flow (Q) (m^3/s) (ft^3/s) Q = (W)(D)(V)
			At Point (ft/s)(m/s)	Average (ft/s)(m/s)	

Water too high (1.5m) very fast moving

Velocity ≥ 59.703 cf/s. Flow similar to site 14 (59.703 cf/s) but Site 16 is deeper.

Not Finished
- redo on next visit

16

Field Data Sheets – Basic RUAA Survey

(should be completed for each site)

Data Collectors & Contact Information: P. Lokanath, K. Condra, L. Kerry, L. Bonviadas	
Date & Time: 05/14/10 14:41-1521	County Name: Matagorda
Stream Name: Caney Creek above tidal	
Segment No. or nearest downstream Segment No.: 1305	
Description of Site: Allenhurst Rd @ Caney Creek	

At any point during the Basic RUAA Survey it becomes apparent that primary contact recreation is clearly the use for the water body the investigator should stop conducting the UAA.

A. Stream Characteristics:

1. Check the following channel flow status that applies.
dry ☐ no flow ☐ low ☒ normal ☐ high flooded

2. Check the following stream type that applies on the day of the survey:
Ephemeral: A stream which flows only during or immediately after a rainfall event, and contains no refuge pools capable of sustaining a viable community of aquatic organisms.
☐ Intermittent: A stream which has a period of zero flow for at least one week during most years. Where flow records are available, a stream with a 7Q2 flow of less than 0.1 cubic feet per second is considered intermittent.
☐ Intermittent w/ perennial pools: An intermittent stream which maintains persistent pools even when flow in the stream is less than 0.1 cubic feet per second.
☒ Perennial: A stream which flows continuously throughout the year. Perennial streams have a 7Q2 equal to or greater than 0.1 cubic feet per second.
☐ Designated or unclassified tidal stream: A stream that is tidally influenced. If you checked this box, you will need to contact the Water Quality Standards Group and evaluate whether or not a bathing beach is located along the tidal stream and whether or not a bathing beach is located along the estuary, bay or Gulf water that the tidal stream flows into.

3. Streamflow
Use USGS gage data (if a gage is located at a site or within a quarter mile of a site) or use the Stream Flow (Discharge) Measurement Form and follow the procedures outlined in the most recent TCEQ Surface Water Quality Monitoring Procedures, Volume 1, RG-415. If USGS gage data is used for a site, include that information as an attachment and list the streamflow on the sampling date below. If the stream flow taken at one site is representative of the flow at another site(s), then that flow can be used as the observed flow and should be documented below. If the stream flow measured at one site is different from another site, then stream flow should be taken at both sites. _____ cfs

4. Water Quality Data (Field Parameters)
Field parameters should be collected in accordance with the procedures outlined in the most recent TCEQ Surface Water Quality Monitoring Procedures, Volume 1.
Air Temp _____ ° C Water Temp _____ ° C Secchi _____ m

5. Riparian Zone (Mark dominant categories with L (Left Bank) and R (Right Bank). Bank orientation is determined by the investigator facing downstream.)

_____ Forest	_____ Urban	_____ Rip rap
R/L Shrub dominated corridor	_____ Pasture	_____ Concrete
_____ Herbaceous marsh	_____ Row crops	Other (specify): _____
_____ Mowed/maintained corridor	_____ Denuded/Eroded bank	

6. Ease of bank access to the water body: ☐ Easy ☒ Moderately easy ☐ Moderately difficult ☐ Difficult

7. Please describe access opportunities or explain why the site is not easily accessible (Attach photos for documentation):
bridge closing, concrete under the bridge on the bank (moderately steep).

8. Dominant Primary Substrate
☐ Cobble ☒ Sand ☐ Silt ☒ Mud/Clay ☒ Gravel ☐ Bedrock ☐ Rip rap ☐ Concrete
↓ banks.

Field Data Sheets – Basic RUAA Survey

Stream Name Caney Creek above tidal Site: 16
Date: 5/14/10 Time: 1441

B. Primary Contact Water Recreation Evaluation:
- Primary contact recreation draft definition: Water recreation activities, such as wading by children, swimming, water skiing, diving, tubing, surfing, and whitewater kayaking, canoeing, and rafting, involving a significant risk of ingestion of water.

1. Were water recreation activities that involve a significant risk of ingestion (full body immersion) observed at this site?
☐ Yes ☒ No primary contact recreation activities were observed

a. Check the following boxes of primary contact recreation activities observed at the time of the sampling event at the site (Attach photos of the activities or lack of activities).

☐ Wading-Children ☐ Tubing ☒ No primary contact activities that commonly occur were observed
☐ Wading-Adults ☐ Surfing
☐ Swimming ☐ Whitewater-kayaking, canoeing, rafting
☐ Water skiing ☐ Other: _____
☐ Diving ☐ frequent public swimming-created by publicly owned land or commercial operations

b. Check the number of individuals observed at the site: ☒ None ☐ 1-10 ☐ 11-20 ☐ 20-50 ☐ greater than 50

c. Check the following that apply regarding the individuals proximity to the water body.
☐ Water in mouth or nose of the individual ☐ Primary touch: Individual's body (or portion) immersed in water
☐ Secondary touch: fishing, pets and related contact with water ☐ Individual is in a boat touching water
☐ Individual is on shore near water within 8 meters (25ft) of water ☐ Individual is well away from water between 8 and 30 meters (100 ft) ☒ Not applicable

2. If primary contact recreation activities are not observed, describe the physical characteristics of the water body that may hinder the frequency of primary contact (depth, etc.) (Attach photos, etc. for documentation).
lot of debris in water, lot of trash & log jams
water was shallow under the bridge.

3. Describe if there is public access (e.g. parks, roads, etc.) (Attach photos, maps, etc. for documentation).
bridge crossing.

4. Is an area with primary contact recreation activities or a bathing beach (e.g. state/local parks with swimming, etc.) located near (e.g. within 5 miles upstream and downstream) this site? ~~N/A~~ NES No

C. Secondary Contact Water Recreation Evaluation:
- Secondary contact recreation 1: Water recreation activities, such as fishing, commercial and recreational boating, and limited body contact incidental to shoreline activity, not involving a significant risk of water ingestion and that commonly occur.
- Secondary contact recreation 2: Water recreation activities, such as fishing, commercial and recreational boating, and limited body contact incidental to shoreline activity, not involving a significant risk of water ingestion but that occur less frequently than for secondary contact recreation 1 due to (1) physical characteristics of the water body and/or (2) limited public access.

1. Were water recreation activities observed at the site, but the nature of the recreation does not involve a significant risk of ingestion (e.g. secondary contact recreation activities)? ☐ Yes ☒ No secondary contact recreation activities were observed

a. Check the following boxes of secondary contact recreation activities that were observed at the time of the sampling event at the site (Attach photos of activities or lack of activities).
☐ Fishing
☐ Boating-commercial, recreational
☐ Non-whitewater-kayaking, rafting, canoeing
☒ No secondary contact recreation activities were observed
☐ Other secondary contact activities: _____

Field Data Sheets – Basic RUAA Survey

Stream Name Caney Creek above tidal Site: 16
Date: 5/14/10 Time: 1441

b. Check the number of individuals observed at the site.
X None _ 1-10 _ 11-20 _ 20-50 _ greater than 50

c. Check the following that apply regarding the individuals proximity to the water body.
☐ Secondary touch: fishing, pets and related contact with water ☐ In a boat touching water
☐ Body on shore near water within 8 meters (25ft) of water ☐ Body well away from water between 8 and 30 meters (100 ft) NA

2. If secondary contact recreation activities are not observed, describe the physical characteristics of the water body that may hinder the frequency of secondary contact (Attach photos, etc. for documentation).
Same as before

3. If secondary contact recreation activities are observed, how often do water recreational activities occur that do not involve a significant risk of water ingestion? frequently infrequently N/A
Please describe how often the activities occur? X Unknown Never Daily Monthly Yearly

4. If infrequently, what is the reason? physical characteristics of the water body limited public access
☐ other
If other, list reasons: N/A

5. Describe the physical characteristics of the water body that hinders the frequency of secondary contact recreation (depth, etc.) (Attach photos or depth measurements, etc. for documentation).
Same as before

6. Describe why there is limited public access (e.g. lack of roads, river or stream banks overgrown, etc.) (Attach photos, maps, etc. for documentation).
Steep banks, banks fenced off (private property)

D. Noncontact Recreation Evaluation N/A

Noncontact recreation applies to water bodies where recreation activities do not involve a significant risk of water ingestion, and where primary and secondary contact recreation uses do not occur because of unsafe conditions, such as barge traffic.

1. Provide site-specific information and documentation (including photographs) regarding unsafe conditions, recreation activities, and presence or absence of water recreation activities.

Field Data Sheets – Basic RUAA Survey

Stream Name Caney Creek above tidal Site: 16
Date: 5/14/10 FDS Page 3 of 8 Time: 1441 – 1521

E. Stream Channel and Substantial Pools
Please check the following which best describes the river or stream: ☒ Wadeable ☐ Non-wadeable

1. Wadeable Streams
Determine whether or not the average depth at the thalweg is greater than 0.5 meters and if there are substantial pools with a depth of 1 meter or greater. Walk an approximately 300 meter reach (total) at the site and take the following measurements within the 300 meter reach. Measurements should be taken during base flow conditions (sustained or typical dry, warm-weather flows between rainfall events, excluding unusual antecedent conditions of drought or wet weather

Also, take photos facing upstream, downstream, left bank, and right bank at the 30 meters, 150 meters, and 300 meters.
Photos #s (30 meters) Upstream____ Downstream____ Left Bank ____ Right Bank____
Photos #s (150 meters) Upstream____ Downstream____ Left Bank ____ Right Bank____
Photos #s (300 meters) Upstream____ Downstream____ Left Bank ____ Right Bank____

a) Substantial pools - Measure the length of each pool (if > 10 pools only measure 10 pools), the width (at the widest point), and the deepest depth. A substantial pool is considered a pool greater than 10 meters in length for the purposes of a Basic RUAA Survey. If depth and/or width measurements were not attainable, explain why.

	Length (meters)	Width (meters)	Depth (meters)
Pool 1			
Pool 2			
Pool 3			
Pool 4			
Pool 5			
Pool 6			
Pool 7			
Pool 8			
Pool 9			
Pool 10			

b)Average depth at the thalweg –Take depth measurements approximately every 30 meters to calculate an average depth at the thalweg (at least 10 measurements needed). If depth and/or width measurements were not attainable, explain why.

Distance	Depth (meters)
30 meters	
60 meters	
90 meters	
120 meters	2.19
150 meters	.35 ft
180 meters	
210 meters	
240 meters	
270 meters	
300 meters	
Average	

64ft – 2.6 from 120

64ft → PL

2.6 ft depth was taken @ ~~99 m~~ 100.5m KC 7/7/10

100.5 m – down tree across the creek

unable to complete due to rain

Field Data Sheets – Basic RUAA Survey

Stream Name Caney Creek above tidal Site: 16
Date: 5/14/10 Time: 1441

c) Stream width - Measure (1) the width at one point which represents the typical average width of the 300 meter reach; (2) the width at the narrowest point of the stream within the 300 meter reach; and (3) the width at the widest point of the stream within the 300 meter reach.

Measurement Type	Width (meters)
Typical Average Width of 300 meter reach	
Width at narrowest point of the stream within 300 meter reach	
Width at the widest point of the stream within 300 meter reach	

d) Is there sufficient water within a 300 meter stream reach during base flow conditions to support primary contact recreation? ☒ Yes ☐ No
COMMENTS:

2. Non-wadeable Streams N/A
If accessible, take 10 width measurements which represent typical widths of the 300 meter reach. If the water is too deep and not accessible record the estimated average width of the water body.

Also, take photos facing upstream, downstream, left bank, and right bank at .
Photos #s (30 meters) Upstream____ Downstream____ Left Bank ____ Right Bank____
Photos #s (150 meters) Upstream____ Downstream____ Left Bank ____ Right Bank____
Photos #s (300 meters) Upstream____ Downstream____ Left Bank ____ Right Bank____

# Measurements	Width (meters)
1	
2	
3	
4	
5	
6	
7	
8	
9	
10	

Field Data Sheets – Basic RUAA Survey

Stream Name Caney Creek above tidal Site: 16
Date: 5/14/10 Time: 1441

F. Additional RUAA Information

1. Check the following activities observed over the site reach.

- ☐ Drinking or water in mouth
- ☐ Bathing
- ☐ Walking
- ☐ Jogging/running
- ☐ Bicycling
- ☐ Standing
- ☐ Sitting
- ☐ Lying down/sleeping
- ☐ Playing on shoreline
- ☐ Picnicking
- ☐ Motorcycle/ATV
- ☐ Hunting/Trapping
- ☐ Wildlife watching
- ☒ None
- ☐ Other: _____

2. Are there permanent or long-term hydrologic modifications that are constructed and operated in a way that affects the recreational uses? ☐ Yes ☒ No (If yes, please provide supporting documentation and photos.)
Comments: _____

3. Check any channel obstructions that apply (Attach photos).

- ☐ Culverts
- ☐ Barbed wire
- ☐ Utility pipe
- ☐ Fences
- ☐ Dams
- ☐ Other (specify): Debri
- ☒ Log jams
- ☐ Thick vegetation
- ☐ Rip rap
- ☐ Low bridges
- ☐ Water control structure
- ☐ None

4. Check all surrounding conditions that promote recreational activities (Attach photos of evidence or unusual items of interest).

- ☐ Campgrounds
- ☐ Playgrounds
- ☒ Rural area
- ☐ Residential
- ☐ National forests
- ☐ Urban/suburban location
- ☐ Golf Course
- ☐ Sports Field
- ☐ Stairs/walkway
- ☐ Boating access (ramps)
- ☐ Beach
- ☒ Bridge crossing
- ☐ Commercial boating
- ☐ Trails/paths (hiking/biking)
- ☐ Paved parking lot
- ☐ Unimproved parking lot
- ☒ Roads (paved/unpaved)
- ☐ Populated area
- ☐ Docks or rafts
- ☐ Commercial outfitter
- ☐ Nearby school
- ☐ Power Line Corridor
- ☐ Parks (national/city/county/state)
- ☐ Public Property
- ☐ Other: _____
- ☐ None of the Above

Comments: Rural residential on the left bank

5. Check all surrounding conditions that impede recreational activities (Attach photos of evidence or unusual items of interest).

- ☒ Private Property
- ☐ No trespass sign
- ☐ Wildlife
- ☒ Steep slopes
- ☐ No public access
- ☐ No roads
- ☒ Fence
- ☐ Barge/ship traffic
- ☐ Industrial
- ☐ None of the Above
- ☐ Other: _____

Comments: _____

6. Check any indications of human use (Attach photos).

- ☒ Roads
- ☐ Rope swings
- ☐ Dock/platform
- ☐ Foot paths/prints
- ☐ Other: _____
- ☐ RV/ATV Tracks
- ☐ Camping Sites
- ☐ Fire pit/ring
- ☐ Fishing Tackle
- ☐ NPDES Discharge
- ☐ Gates on corridor
- ☐ Children's toys
- ☐ Remnant's of Kid's play
- ☐ Organized event
- ☐ No Human Presence

Comments: _____

Field Data Sheets – Basic RUAA Survey

Stream Name Caney Creek above tidal Site: 16
Date: 5/14/10 Time: 1441

7. Check all water characteristics that apply (Attach photos).
Aquatic Vegetation: absent rare common abundant
Algae Cover: absent rare common abundant
Odor: none rare common abundant
Color: clear green red brown black
Bottom Deposit: sludge solids fine sediments none other
Water Surface: clear scum foam debris oil
Other:

8. Vertebrates Observed within 300 meter reach
Snakes None slight presence moderate presence large presence
Water Dependent Birds None slight presence moderate presence large presence
Alligators None slight presence moderate presence large presence
Comments:

9. Mammals Observed within 300 meter reach
Wild None slight presence moderate presence large presence
Domesticated Pets None slight presence moderate presence large presence
Livestock None slight presence moderate presence large presence
Feral Hogs None slight presence moderate presence large presence
Comments:

10. Evidence of wild animals or evidence of birds, cattle, hogs, etc.
Tracks Fecal droppings Bird nests

11. Garbage Observed
Large garbage in the channel None Rare Common Abundant
Small garbage in the channel None Rare Common Abundant
Bank Garbage None Rare Common Abundant
Briefly describe the kinds of garbage observed:

12. Is the site located in a wildlife preserve with large wildlife (i.e waterfowl) population? Yes No

13. Please document any other relevant information regarding recreational activities and the water body in general (for example, area outside of the stream reach evaluated).

Unable to complete survey due to rain.

Field Data Sheet - Basic RUAA Survey

Stream Flow (Discharge) Measurement

Stream: Caney Creek above tidal Date: 05/14/10

Site: 16 Site

Description: Allenhurst Rd @ Caney Creek

Time Begin: 14:55 Time End: Meter Type: Sontek Flowtracker

Observers: P. Lokanath, L. Ray Stream Width*: ~~20.2~~ 19.8 Section Width (W): ~~1.01~~ PL ~~0.99~~ PL 1.98

Observations:

Section Midpoint (ft) (m)	Section Depth (ft) (m) (cm) (D)	Observational Depth** (ft)(m)	Velocity (V) At Point (ft/s)(m/s)	Velocity (V) Average (ft/s)(m/s)	Flow (Q) (m^3/s) (ft^3/s) Q = (W)(D)(V)
0.99 ~~0.49~~ PL ~~0.50~~	0.1			0.00	
2.97	0.1			-0.01	
4.95	0.2				
6.93					
8.91					
10.89					
12.87					
14.85					
16.83					
18.81					

17

Field Data Sheets – Basic RUAA Survey

(should be completed for each site) 13:13 – 1425

Data Collectors & Contact Information: K. Condra, P. Lokanath, L. Ray, L. Benavides	
Date & Time: 5/14/10 12:07 PM	County Name: Matagorda
Stream Name: Caney Creek above tidal	
Segment No. or nearest downstream Segment No.: 1305	
Description of Site: FM 157 @ Caney Creek	

At any point during the Basic RUAA Survey it becomes apparent that primary contact recreation is clearly the use for the water body the investigator should stop conducting the UAA.

A. Stream Characteristics:

1. Check the following channel flow status that applies.
dry ☐ no flow ☐ low ☒ normal ☐ high ☐ flooded

2. Check the following stream type that applies on the day of the survey:
Ephemeral: A stream which flows only during or immediately after a rainfall event, and contains no refuge pools capable of sustaining a viable community of aquatic organisms.
☐ Intermittent: A stream which has a period of zero flow for at least one week during most years. Where flow records are available, a stream with a 7Q2 flow of less than 0.1 cubic feet per second is considered intermittent.
☐ Intermittent w/ perennial pools: An intermittent stream which maintains persistent pools even when flow in the stream is less than 0.1 cubic feet per second.
☒ Perennial: A stream which flows continuously throughout the year. Perennial streams have a 7Q2 equal to or greater than 0.1 cubic feet per second.
☐ Designated or unclassified tidal stream: A stream that is tidally influenced. If you checked this box, you will need to contact the Water Quality Standards Group and evaluate whether or not a bathing beach is located along the tidal stream and whether or not a bathing beach is located along the estuary, bay or Gulf water that the tidal stream flows into.

3. Streamflow
Use USGS gage data (if a gage is located at a site or within a quarter mile of a site) or use the Stream Flow (Discharge) Measurement Form and follow the procedures outlined in the most recent TCEQ Surface Water Quality Monitoring Procedures, Volume 1, RG-415. If USGS gage data is used for a site, include that information as an attachment and list the streamflow on the sampling date below. If the stream flow taken at one site is representative of the flow at another site(s), then that flow can be used as the observed flow and should be documented below. If the stream flow measured at one site is different from another site, then stream flow should be taken at both sites. 8.563 cfs

4. Water Quality Data (Field Parameters)
Field parameters should be collected in accordance with the procedures outlined in the most recent TCEQ Surface Water Quality Monitoring Procedures, Volume 1.
Air Temp 28 °C Water Temp 28 °C Secchi 0.224 m

5. Riparian Zone (Mark dominant categories with L (Left Bank) and R (Right Bank). Bank orientation is determined by the investigator facing downstream.)

____ Forest	____ Urban	____ Rip rap
L/R Shrub dominated corridor	____ Pasture	____ Concrete
L/R Herbaceous marsh	____ Row crops	Other (specify): ____
____ Mowed/maintained corridor	____ Denuded/Eroded bank	

6. Ease of bank access to the water body: ☐ Easy ☐ Moderately easy ☒ Moderately difficult ☐ Difficult

7. Please describe access opportunities or explain why the site is not easily accessible (Attach photos for documentation):
Park in ditch at bridge, access from residents home

8. Dominant Primary Substrate
☐ Cobble ☐ Sand ☐ Silt ☒ Mud/Clay ☐ Gravel ☐ Bedrock ☐ Rip rap ☐ Concrete

Q2 BRR

QC PL

B10 MES

Field Data Sheets – Basic RUAA Survey

Stream Name Caney Creek above tidal Site: 17
Date: 5/14/10 Time: 13:13-1425

B. Primary Contact Water Recreation Evaluation:
- Primary contact recreation draft definition: Water recreation activities, such as wading by children, swimming, water skiing, diving, tubing, surfing, and whitewater kayaking, canoeing, and rafting, involving a significant risk of ingestion of water.

1. Were water recreation activities that involve a significant risk of ingestion (full body immersion) observed at this site?
☐ Yes ☒ No primary contact recreation activities were observed

a. Check the following boxes of primary contact recreation activities observed at the time of the sampling event at the site (Attach photos of the activities or lack of activities).

☐ Wading-Children ☐ Tubing ☒ No primary contact activities that commonly occur were observed
☐ Wading-Adults ☐ Surfing
☐ Swimming ☐ Whitewater-kayaking, canoeing, rafting
☐ Water skiing ☐ Other: _____
☐ Diving ☐ frequent public swimming-created by publicly owned land or commercial operations

b. Check the number of individuals observed at the site: ☒ None ☐ 1-10 ☐ 11-20 ☐ 20-50 ☐ greater than 50

c. Check the following that apply regarding the individuals proximity to the water body.
☐ Water in mouth or nose of the individual ☐ Primary touch: Individual's body (or portion) immersed in water
☐ Secondary touch: fishing, pets and related contact with water ☐ Individual is in a boat touching water
☐ Individual is on shore near water within 8 meters (25ft) of water ☐ Individual is well away from water between 8 and 30 meters (100 ft) ☒ Not applicable

2. If primary contact recreation activities are not observed, describe the physical characteristics of the water body that may hinder the frequency of primary contact (depth, etc.) (Attach photos, etc. for documentation).
Bank mostly overgrown, steep concrete under bridge

3. Describe if there is public access (e.g. parks, roads, etc.) (Attach photos, maps, etc. for documentation).
Park in ditch by bridge, residents walk to bank from house

4. Is an area with primary contact recreation activities or a bathing beach (e.g. state/local parks with swimming, etc.) located near (e.g. within 5 miles upstream and downstream) this site? ~~N/A~~ No

C. Secondary Contact Water Recreation Evaluation:
- Secondary contact recreation 1: Water recreation activities, such as fishing, commercial and recreational boating, and limited body contact incidental to shoreline activity, not involving a significant risk of water ingestion and that commonly occur.
- Secondary contact recreation 2: Water recreation activities, such as fishing, commercial and recreational boating, and limited body contact incidental to shoreline activity, not involving a significant risk of water ingestion but that occur less frequently than for secondary contact recreation 1 due to (1) physical characteristics of the water body and/or (2) limited public access.

1. Were water recreation activities observed at the site, but the nature of the recreation does not involve a significant risk of ingestion (e.g. secondary contact recreation activities)? ☐ Yes ☒ No secondary contact recreation activities were observed

a. Check the following boxes of secondary contact recreation activities that were observed at the time of the sampling event at the site (Attach photos of activities or lack of activities).

☐ Fishing
☐ Boating-commercial, recreational
☐ Non-whitewater-kayaking, rafting, canoeing
☒ No secondary contact recreation activities were observed
☐ Other secondary contact activities: _____

Field Data Sheets – Basic RUAA Survey

Stream Name Caney Creek above tidal Site: 17
Date: 5/04/10 Time: 1313-1425

b. Check the number of individuals observed at the site.
x None _ 1-10 _ 11-20 _ 20-50 _ greater than 50

c. Check the following that apply regarding the individuals proximity to the water body.
☐ Secondary touch: fishing, pets and related contact with water ☐ In a boat touching water
☐ Body on shore near water within 8 meters (25ft) of water ☐ Body well away from water between 8 and 30 meters (100 ft) N/A

2. If secondary contact recreation activities are not observed, describe the physical characteristics of the water body that may hinder the frequency of secondary contact (Attach photos, etc. for documentation).
same

3. If secondary contact recreation activities are observed, how often do water recreational activities occur that do not involve a significant risk of water ingestion? frequently infrequently N/A
Please describe how often the activities occur? X Unknown Never Daily Monthly Yearly

4. If infrequently, what is the reason? physical characteristics of the water body limited public access
☐ other N/A
If other, list reasons:

5. Describe the physical characteristics of the water body that hinders the frequency of secondary contact recreation (depth, etc.) (Attach photos or depth measurements, etc. for documentation).
Same

6. Describe why there is limited public access (e.g. lack of roads, river or stream banks overgrown, etc.) (Attach photos, maps, etc. for documentation).
~~Same~~ Residential homes along the banks, only parking by bridge in ditch, overgrown banks

D. Noncontact Recreation Evaluation
Noncontact recreation applies to water bodies where recreation activities do not involve a significant risk of water ingestion, and where primary and secondary contact recreation uses do not occur because of unsafe conditions, such as barge traffic.

1. Provide site-specific information and documentation (including photographs) regarding unsafe conditions, recreation activities, and presence or absence of water recreation activities.
N/A

Field Data Sheets – Basic RUAA Survey

Stream Name Caney Creek above tidal Site: 17
Date: 5/19/10 Time: 1313-1425
FDS Page 3 of 8

E. Stream Channel and Substantial Pools
Please check the following which best describes the river or stream: ~~X~~ Wadeable X Non-wadeable

1. Wadeable Streams
Determine whether or not the average depth at the thalweg is greater than 0.5 meters and if there are substantial pools with a depth of 1 meter or greater. Walk an approximately 300 meter reach (total) at the site and take the following measurements within the 300 meter reach. Measurements should be taken during base flow conditions (sustained or typical dry, warm-weather flows between rainfall events, excluding unusual antecedent conditions of drought or wet weather

Also, take photos facing upstream, downstream, left bank, and right bank at the 30 meters, 150 meters, and 300 meters.
Photos #s (30 meters) Upstream____ Downstream____ Left Bank ____ Right Bank____
Photos #s (150 meters) Upstream ✓ Downstream ✓ Left Bank ✓ Right Bank ✓
at 180m → Photos #s (300 meters) Upstream ✓ Downstream ✓ Left Bank ✓ Right Bank ✓

Pics start at 150m, 180m, ~130m

a) Substantial pools - Measure the length of each pool (if > 10 pools only measure 10 pools), the width (at the widest point), and the deepest depth. A substantial pool is considered a pool greater than 10 meters in length for the purposes of a Basic RUAA Survey. If depth and/or width measurements were not attainable, explain why.

	Length (meters)	Width (meters)	Depth (meters)
Pool 1			
Pool 2			
Pool 3			
Pool 4			
Pool 5			
Pool 6			
Pool 7			
Pool 8			
Pool 9			
Pool 10			

b)Average depth at the thalweg –Take depth measurements approximately every 30 meters to calculate an average depth at the thalweg (at least 10 measurements needed). If depth and/or width measurements were not attainable, explain why.

Distance	Depth (meters)
30 meters	
60 meters	
90 meters	
120 meters	
150 meters	1.62ft (0.49m)
180 meters	3.5ft (1.066m)
210 meters	
240 meters	
270 meters	
300 meters	
Average	

too deep

too deep

Field Data Sheets – Basic RUAA Survey

Stream Name Caney Creek above tidal Site: 17
Date: 5/14/10 Time: 1313-1425

c) Stream width - Measure (1) the width at one point which represents the typical average width of the 300 meter reach; (2) the width at the narrowest point of the stream within the 300 meter reach; and (3) the width at the widest point of the stream within the 300 meter reach.

Measurement Type	Width (meters)
Typical Average Width of 300 meter reach	~~25.3ft~~ (7.7m)
Width at narrowest point of the stream within 300 meter reach	
Width at the widest point of the stream within 300 meter reach	

d) Is there sufficient water within a 300 meter stream reach during base flow conditions to support primary contact recreation? ☒ Yes ☐ No
COMMENTS:

2. Non-wadeable Streams
If accessible, take 10 width measurements which represent typical widths of the 300 meter reach. If the water is too deep and not accessible record the estimated average width of the water body.

Also, take photos facing upstream, downstream, left bank, and right bank at .
Photos #s (30 meters) Upstream____ Downstream____ Left Bank ____ Right Bank____
Photos #s (150 meters) Upstream____ Downstream____ Left Bank ____ Right Bank____
Photos #s (300 meters) Upstream____ Downstream____ Left Bank ____ Right Bank____

# Measurements	Width (meters)
1	7.7m
2	
3	
4	
5	
6	
7	
8	
9	
10	

Field Data Sheets – Basic RUAA Survey

Stream Name Caney Creek above tidal Site: 17
Date: 5/14/10 Time: 1313 – 1425

F. Additional RUAA Information

1. Check the following activities observed over the site reach.

- ☐ Drinking or water in mouth
- ☐ Bathing
- ☐ Walking
- ☐ Jogging/running
- ☐ Bicycling
- ☐ Standing
- ☐ Sitting
- ☐ Lying down/sleeping
- ☐ Playing on shoreline
- ☐ Picnicking
- ☐ Motorcycle/ATV
- ☐ Hunting/Trapping
- ☐ Wildlife watching
- ☒ None
- ☐ Other: _____

2. Are there permanent or long-term hydrologic modifications that are constructed and operated in a way that affects the recreational uses? ☐ Yes ☒ No (If yes, please provide supporting documentation and photos.)
Comments: _____

3. Check any channel obstructions that apply (Attach photos).

- ☐ Culverts
- ☐ Barbed wire
- ☐ Utility pipe
- ☐ Fences
- ☐ Dams
- ☐ Other (specify): _____
- ☐ Log jams
- ☐ Thick vegetation
- ☐ Rip rap
- ☐ Low bridges
- ☐ Water control structure
- ☒ None

4. Check all surrounding conditions that promote recreational activities (Attach photos of evidence or unusual items of interest).

- ☐ Campgrounds
- ☐ Playgrounds
- ☒ Rural area
- ☒ Residential
- ☐ National forests
- ☐ Urban/suburban location
- ☐ Golf Course
- ☐ Sports Field
- ☐ Stairs/walkway
- ☐ Boating access (ramps)
- ☐ Beach
- ☒ Bridge crossing
- ☐ Commercial boating
- ☐ Trails/paths (hiking/biking)
- ☐ Paved parking lot
- ☐ Unimproved parking lot
- ☒ Roads (paved/unpaved)
- ☐ Populated area
- ☐ Docks or rafts
- ☐ Commercial outfitter
- ☐ Nearby school
- ☐ Power Line Corridor
- ☐ Parks (national/city/county/state)
- ☐ Public Property
- ☐ Other: _____
- ☐ None of the Above

Comments: _____

5. Check all surrounding conditions that impede recreational activities (Attach photos of evidence or unusual items of interest).

- ☒ Private Property
- ☐ No trespass sign
- ☐ Wildlife
- ☒ Steep slopes
- ☐ No public access
- ☐ No roads
- ☒ Fence
- ☐ Barge/ship traffic
- ☐ Industrial
- ☐ None of the Above
- ☐ Other: _____

Comments: _____

6. Check any indications of human use (Attach photos).

- ☒ Roads
- ☐ Rope swings
- ☐ Dock/platform
- ☐ Foot paths/prints
- ☐ Other: _____
- ☐ RV/ATV Tracks
- ☐ Camping Sites
- ☐ Fire pit/ring
- ☐ Fishing Tackle
- ☐ NPDES Discharge
- ☐ Gates on corridor
- ☐ Children's toys
- ☐ Remnant's of Kid's play
- ☐ Organized event
- ☐ No Human Presence

Comments: _____

Field Data Sheets – Basic RUAA Survey

Stream Name Caney Creek above tidal Site: 17
Date: 5/14/10 Time: 1313-1425

7. Check all water characteristics that apply (Attach photos).

Aquatic Vegetation: absent rare common X abundant
Algae Cover: absent rare X common abundant
Odor: X none rare common abundant
Color: clear X green red brown black
Bottom Deposit: sludge solids X fine sediments none other
Water Surface: X clear scum foam debris oil
Other:

8. Vertebrates Observed within 300 meter reach

Snakes X None slight presence moderate presence large presence
Water Dependent Birds X None slight presence moderate presence large presence
Alligators None X slight presence moderate presence large presence
Comments: 2 alligators in water

9. Mammals Observed within 300 meter reach

Wild X None slight presence moderate presence large presence
Domesticated Pets X None slight presence moderate presence large presence
Livestock X None slight presence moderate presence large presence
Feral Hogs X None slight presence moderate presence large presence
Comments:

10. Evidence of wild animals or evidence of birds, cattle, hogs, etc.

Tracks Fecal droppings X Bird nests swallow nests under bridge

11. Garbage Observed

Large garbage in the channel None X Rare Common Abundant
Small garbage in the channel X None X Rare Common Abundant
Bank Garbage None X Rare X Common Abundant
Briefly describe the kinds of garbage observed: large electrical device in water, plastic bag, beer cans, cups, plastic holder

12. Is the site located in a wildlife preserve with large wildlife (i.e waterfowl) population? Yes X No

13. Please document any other relevant information regarding recreational activities and the water body in general (for example, area outside of the stream reach evaluated).
Large spotted gar in water

Field Data Sheet - Basic RUAA Survey
Stream Flow (Discharge) Measurement

Stream: Caney Creek above Tidal Date: 5/14/10
Site: 17 Site
Description: FM 157
Time Begin: 1335 Time End: 1420 Meter Type: SonTek Flowtracker
Observers: L. Benavides, P. Lokanath Stream Width*: 25.3 Section Width (W): 1.265
Observations:

Section Midpoint (ft)(m)	Section Depth (ft)(m) (cm) (D)	Observational Depth** (ft)(m)	Velocity (V) At Point (ft/s)(m/s)	Velocity (V) Average (ft/s)(m/s)	Flow (Q) (m^3/s)(ft^3/s) Q = (W)(D)(V)
0.632	0.30			-0.00	0.000
1.897	0.75			0.00	0.000
3.162	1.25			0.09	0.142
4.427	1.50			0.43	0.816
5.692	1.60			0.54	1.093
6.957	1.65			0.42	0.877
8.222	1.50			0.44	0.835
9.487	1.65			0.16	0.334
10.752	1.65			0.25	0.522
12.017	1.60			0.30	0.607
13.282	1.55			0.39	0.765
14.547	1.40			0.51	0.903
15.812	1.50			0.21	0.398
17.077	1.10			0.52	0.724
18.342	0.90			0.22	0.223
19.607	0.80			0.27	0.205
20.872	0.60			0.31	0.118
22.137	0.30			0.01	0.002
23.402	0.15			0.10	0.000
24.667	too shallow			too shallow	0.000

Total Q = ~~8.731~~
8.563 cfs

E MES

18

Field Data Sheets – Basic RUAA Survey

(should be completed for each site)

Data Collectors & Contact Information: P. Lokanath, K. Condra, L. Pay, L. Benavides	
Date & Time: 05/14/10 12:47-13:03	County Name: Matagorda
Stream Name: Caney Creek above tidal	
Segment No. or nearest downstream Segment No.: 1305	
Description of Site: Grisham Rd @ Caney Creek	

At any point during the Basic RUAA Survey it becomes apparent that primary contact recreation is clearly the use for the water body the investigator should stop conducting the UAA.

A. Stream Characteristics:

1. Check the following channel flow status that applies.

☐ dry ☐ no flow ☐ low ☒ normal ☐ high ☐ flooded

2. Check the following stream type that applies on the day of the survey:

☐ Ephemeral: A stream which flows only during or immediately after a rainfall event, and contains no refuge pools capable of sustaining a viable community of aquatic organisms.

☐ Intermittent: A stream which has a period of zero flow for at least one week during most years. Where flow records are available, a stream with a 7Q2 flow of less than 0.1 cubic feet per second is considered intermittent.

☐ Intermittent w/ perennial pools: An intermittent stream which maintains persistent pools even when flow in the stream is less than 0.1 cubic feet per second.

☒ Perennial: A stream which flows continuously throughout the year. Perennial streams have a 7Q2 equal to or greater than 0.1 cubic feet per second.

☐ Designated or unclassified tidal stream: A stream that is tidally influenced. If you checked this box, you will need to contact the Water Quality Standards Group and evaluate whether or not a bathing beach is located along the tidal stream and whether or not a bathing beach is located along the estuary, bay or Gulf water that the tidal stream flows into.

3. Streamflow

Use USGS gage data (if a gage is located at a site or within a quarter mile of a site) or use the Stream Flow (Discharge) Measurement Form and follow the procedures outlined in the most recent TCEQ Surface Water Quality Monitoring Procedures, Volume 1, RG-415. If USGS gage data is used for a site, include that information as an attachment and list the streamflow on the sampling date below. If the stream flow taken at one site is representative of the flow at another site(s), then that flow can be used as the observed flow and should be documented below. If the stream flow measured at one site is different from another site, then stream flow should be taken at both sites. _____ cfs no flow taken, too deep

4. Water Quality Data (Field Parameters)

Field parameters should be collected in accordance with the procedures outlined in the most recent TCEQ Surface Water Quality Monitoring Procedures, Volume 1.

Air Temp 27 °C Water Temp 28 °C Secchi 0.65m

5. Riparian Zone (Mark dominant categories with L (Left Bank) and R (Right Bank). Bank orientation is determined by the investigator facing downstream.)

_____ Forest	_____ Urban	_____ Rip rap
R Shrub dominated corridor with trees	R/L Pasture	_____ Concrete
_____ Herbaceous marsh	_____ Row crops	Other (specify): _____
L Mowed/maintained corridor	_____ Denuded/Eroded bank	

6. Ease of bank access to the water body: ☐ Easy ☒ Moderately easy ☐ Moderately difficult ☐ Difficult

7. Please describe access opportunities or explain why the site is not easily accessible (Attach photos for documentation):

Able to access only left bank, right bank - steep slopes, left bank is fenced off on the downstream & upstream, wooden bridge crossing, unpaved road

8. Dominant Primary Substrate

☐ Cobble ☐ Sand ☐ Silt ☒ Mud/Clay ☐ Gravel ☐ Bedrock ☐ Rip rap ☐ Concrete

Q2 DRR Epc

Field Data Sheets – Basic RUAA Survey

Stream Name Caney Creek above tidal Site: 18
Date: 05/14/10 Time: 12:47 – 13:03

B. Primary Contact Water Recreation Evaluation:
- Primary contact recreation draft definition: Water recreation activities, such as wading by children, swimming, water skiing, diving, tubing, surfing, and whitewater kayaking, canoeing, and rafting, involving a significant risk of ingestion of water.

1. Were water recreation activities that involve a significant risk of ingestion (full body immersion) observed at this site?
☐ Yes ☒ No primary contact recreation activities were observed

a. Check the following boxes of primary contact recreation activities observed at the time of the sampling event at the site (Attach photos of the activities or lack of activities).

☐ Wading-Children ☐ Tubing ☒ No primary contact activities that commonly occur were observed
☐ Wading-Adults ☐ Surfing
☐ Swimming ☐ Whitewater-kayaking, canoeing, rafting
☐ Water skiing ☐ Other: _____
☐ Diving ☐ frequent public swimming-created by publicly owned land or commercial operations

b. Check the number of individuals observed at the site: ☒ None ☐ 1-10 ☐ 11-20 ☐ 20-50 ☐ greater than 50

c. Check the following that apply regarding the individuals proximity to the water body.
☐ Water in mouth or nose of the individual ☐ Primary touch: Individual's body (or portion) immersed in water
☐ Secondary touch: fishing, pets and related contact with water ☐ Individual is in a boat touching water
☐ Individual is on shore near water within 8 meters (25ft) of water ☐ Individual is well away from water between 8 and 30 meters (100 ft) ☒ Not applicable

2. If primary contact recreation activities are not observed, describe the physical characteristics of the water body that may hinder the frequency of primary contact (depth, etc.) (Attach photos, etc. for documentation).
Water depth > 4ft, vegetated banks, moderately steep slopes on the right bank left bank fenced off both up & downstream (barbed wire fenced)

3. Describe if there is public access (e.g. parks, roads, etc.) (Attach photos, maps, etc. for documentation).
Unpaved road & wooden bridge crossing.

4. Is an area with primary contact recreation activities or a bathing beach (e.g. state/local parks with swimming, etc.) located near (e.g. within 5 miles upstream and downstream) this site? ~~N/A~~ no

C. Secondary Contact Water Recreation Evaluation:
- Secondary contact recreation 1: Water recreation activities, such as fishing, commercial and recreational boating, and limited body contact incidental to shoreline activity, not involving a significant risk of water ingestion and that commonly occur.
- Secondary contact recreation 2: Water recreation activities, such as fishing, commercial and recreational boating, and limited body contact incidental to shoreline activity, not involving a significant risk of water ingestion but that occur less frequently than for secondary contact recreation 1 due to (1) physical characteristics of the water body and/or (2) limited public access.

1. Were water recreation activities observed at the site, but the nature of the recreation does not involve a significant risk of ingestion (e.g. secondary contact recreation activities)? ☐ Yes ☒ No secondary contact recreation activities were observed

a. Check the following boxes of secondary contact recreation activities that were observed at the time of the sampling event at the site (Attach photos of activities or lack of activities).
☐ Fishing
☐ Boating-commercial, recreational
☐ Non-whitewater-kayaking, rafting, canoeing
☒ No secondary contact recreation activities were observed
☐ Other secondary contact activities: _____

Field Data Sheets – Basic RUAA Survey

Stream Name Caney Creek above tidal Site: 18
Date: 05/14/10 Time: 1247 – 1303

b. Check the number of individuals observed at the site.
X None ☐ 1-10 ☐ 11-20 ☐ 20-50 ☐ greater than 50

c. Check the following that apply regarding the individuals proximity to the water body.
☐ Secondary touch: fishing, pets and related contact with water ☐ In a boat touching water
☐ Body on shore near water within 8 meters (25ft) of water ☐ Body well away from water between 8 and 30 meters (100 ft) N/A

2. If secondary contact recreation activities are not observed, describe the physical characteristics of the water body that may hinder the frequency of secondary contact (Attach photos, etc. for documentation).
Same as before

3. If secondary contact recreation activities are observed, how often do water recreational activities occur that do not involve a significant risk of water ingestion? ☐ frequently ☐ infrequently N/A
Please describe how often the activities occur? X Unknown ☐ Never ☐ Daily ☐ Monthly ☐ Yearly

4. If infrequently, what is the reason? ☐ physical characteristics of the water body ☐ limited public access ☐ other
If other, list reasons: N/A

5. Describe the physical characteristics of the water body that hinders the frequency of secondary contact recreation (depth, etc.) (Attach photos or depth measurements, etc. for documentation).
Same as before

6. Describe why there is limited public access (e.g. lack of roads, river or stream banks overgrown, etc.) (Attach photos, maps, etc. for documentation).
left bank fenced off both up & downstream, Right bank moderately steep slopes.

D. Noncontact Recreation Evaluation

Noncontact recreation applies to water bodies where recreation activities do not involve a significant risk of water ingestion, and where primary and secondary contact recreation uses do not occur because of unsafe conditions, such as barge traffic.

1. Provide site-specific information and documentation (including photographs) regarding unsafe conditions, recreation activities, and presence or absence of water recreation activities.
water >4 ft deep.

Field Data Sheets – Basic RUAA Survey

Stream Name Caney Creek above tidal Site: 18
Date: 5/14/10 FDS Page 3 of 8 Time: 1247-1303

E. Stream Channel and Substantial Pools
Please check the following which best describes the river or stream: _ Wadeable X Non-wadeable

1. Wadeable Streams
Determine whether or not the average depth at the thalweg is greater than 0.5 meters and if there are substantial pools with a depth of 1 meter or greater. Walk an approximately 300 meter reach (total) at the site and take the following measurements within the 300 meter reach. Measurements should be taken during base flow conditions (sustained or typical dry, warm-weather flows between rainfall events, excluding unusual antecedent conditions of drought or wet weather

Also, take photos facing upstream, downstream, left bank, and right bank at the 30 meters, 150 meters, and 300 meters.
Photos #s (30 meters) Upstream____ Downstream____ Left Bank ____ Right Bank____
Photos #s (150 meters) Upstream____ Downstream____ Left Bank ____ Right Bank____
Photos #s (300 meters) Upstream____ Downstream____ Left Bank ____ Right Bank____

a) Substantial pools - Measure the length of each pool (if > 10 pools only measure 10 pools), the width (at the widest point), and the deepest depth. A substantial pool is considered a pool greater than 10 meters in length for the purposes of a Basic RUAA Survey. If depth and/or width measurements were not attainable, explain why.

	Length (meters)	Width (meters)	Depth (meters)
Pool 1			
Pool 2			
Pool 3			
Pool 4			
Pool 5			
Pool 6			
Pool 7			
Pool 8			
Pool 9			
Pool 10			

b)Average depth at the thalweg –Take depth measurements approximately every 30 meters to calculate an average depth at the thalweg (at least 10 measurements needed). If depth and/or width measurements were not attainable, explain why.

Distance	Depth (meters)
30 meters	
60 meters	
90 meters	
120 meters	
150 meters	
180 meters	
210 meters	
240 meters	
270 meters	
300 meters	
Average	

Field Data Sheets – Basic RUAA Survey

Stream Name Caney Creek above tidal Site: 18
Date: 5/14/10 Time: 1247 - 1303

c) Stream width - Measure (1) the width at one point which represents the typical average width of the 300 meter reach; (2) the width at the narrowest point of the stream within the 300 meter reach; and (3) the width at the widest point of the stream within the 300 meter reach.

Measurement Type	Width (meters)
Typical Average Width of 300 meter reach	
Width at narrowest point of the stream within 300 meter reach	
Width at the widest point of the stream within 300 meter reach	

d) Is there sufficient water within a 300 meter stream reach during base flow conditions to support primary contact recreation? ☒ Yes ☐ No
COMMENTS:

2. Non-wadeable Streams
If accessible, take 10 width measurements which represent typical widths of the 300 meter reach. If the water is too deep and not accessible record the estimated average width of the water body.

Pictures of fishing tackle, PFD

Also, take photos facing upstream, downstream, left bank, and right bank at .
Photos #s (30 meters) Upstream ✓ Downstream ✓ Left Bank ✓ Right Bank ✓
Photos #s (150 meters) Upstream ✓ Downstream ✓ Left Bank ✓ Right Bank ✓
Photos #s (300 meters) Upstream ____ Downstream ✓ Left Bank ____ Right Bank ____

# Measurements	Width (meters)
1	28 ft (8.53m)
2	
3	
4	
5	
6	
7	
8	
9	
10	

at ~ 30 m estimate
Range finder wasn't working

Field Data Sheets – Basic RUAA Survey

Stream Name Caney Creek above tidal Site: 18
Date: 05/14/10 Time: 1247 – 1303

F. Additional RUAA Information

1. Check the following activities observed over the site reach.

- ☐ Drinking or water in mouth
- ☐ Bathing
- ☐ Walking
- ☐ Jogging/running
- ☐ Bicycling
- ☐ Standing
- ☐ Sitting
- ☐ Lying down/sleeping
- ☐ Playing on shoreline
- ☐ Picnicking
- ☐ Motorcycle/ATV
- ☐ Hunting/Trapping
- ☐ Wildlife watching
- ☒ None
- ☐ Other: _____

2. Are there permanent or long-term hydrologic modifications that are constructed and operated in a way that affects the recreational uses? ☒ Yes ☒ No RDL (If yes, please provide supporting documentation and photos.)
Comments: Bridge

3. Check any channel obstructions that apply (Attach photos).

- ☐ Culverts
- ☐ Barbed wire
- ☐ Utility pipe
- ☐ Fences
- ☐ Dams
- ☐ Other (specify): Bridge (pier)
- ☐ Log jams
- ☐ Thick vegetation
- ☐ Rip rap
- ☐ Low bridges
- ☐ Water control structure
- ☒ None

4. Check all surrounding conditions that promote recreational activities (Attach photos of evidence or unusual items of interest).

- ☐ Campgrounds
- ☐ Playgrounds
- ☐ Rural area
- ☒ Residential
- ☐ National forests
- ☐ Urban/suburban location
- ☐ Golf Course
- ☐ Sports Field
- ☐ Stairs/walkway
- ☐ Boating access (ramps)
- ☐ Beach
- ☒ Bridge crossing
- ☐ Commercial boating
- ☐ Trails/paths (hiking/biking)
- ☐ Paved parking lot
- ☐ Unimproved parking lot
- ☒ Roads (paved/unpaved)
- ☐ Populated area
- ☐ Docks or rafts
- ☐ Commercial outfitter
- ☐ Nearby school
- ☐ Power Line Corridor
- ☐ Parks (national/city/county/state)
- ☐ Public Property
- ☐ Other: _____
- ☐ None of the Above

Comments: church on the right bank.

5. Check all surrounding conditions that impede recreational activities (Attach photos of evidence or unusual items of interest).

- ☐ Private Property
- ☐ No trespass sign
- ☐ Wildlife
- ☒ Steep slopes
- ☐ No public access
- ☐ No roads
- ☒ Fence
- ☐ Barge/ship traffic
- ☐ Industrial
- ☐ None of the Above
- ☐ Other: _____

Comments: _____

6. Check any indications of human use (Attach photos).

- ☒ Roads
- ☐ Rope swings
- ☐ Dock/platform
- ☐ Foot paths/prints
- ☐ Other: _____
- ☐ RV/ATV Tracks
- ☐ Camping Sites
- ☐ Fire pit/ring
- ☒ Fishing Tackle
- ☐ NPDES Discharge
- ☐ Gates on corridor
- ☐ Children's toys
- ☐ Remnant's of Kid's play
- ☐ Organized event
- ☐ No Human Presence

Comments: personal floating device on the bank

Field Data Sheets – Basic RUAA Survey

Stream Name Caney Creek above tidal Site: 18
Date: _____ Time: _____

7. Check all water characteristics that apply (Attach photos).

Aquatic Vegetation: ☐ absent ☒ rare ☐ common ☐ abundant
Algae Cover: ☐ absent ☒ rare ☐ common ☐ abundant
Odor: ☒ none ☐ rare ☐ common ☐ abundant
Color: ☐ clear ☐ green ☐ red ☒ brown ☐ black
Bottom Deposit: ☐ sludge ☐ solids ☒ fine sediments ☐ none ☐ other
Water Surface: ☒ clear ☐ scum ☐ foam ☐ debris ☐ oil
Other: _____

8. Vertebrates Observed within 300 meter reach

Snakes	☒ None	☐ slight presence	☐ moderate presence	☐ large presence
Water Dependent Birds	☒ None	☐ slight presence	☐ moderate presence	☐ large presence
Alligators	☒ None	☐ slight presence	☐ moderate presence	☐ large presence

Comments: _____

9. Mammals Observed within 300 meter reach

Wild	☒ None	☐ slight presence	☐ moderate presence	☐ large presence
Domesticated Pets	☒ None	☐ slight presence	☐ moderate presence	☐ large presence
Livestock	☐ None	☒ slight presence	☐ moderate presence	☐ large presence
Feral Hogs	☒ None	☐ slight presence	☐ moderate presence	☐ large presence

Comments: _____

10. Evidence of wild animals or evidence of birds, cattle, hogs, etc.
☒ Tracks ☐ Fecal droppings ☐ Bird nests

11. Garbage Observed

Large garbage in the channel	☒ None	☐ Rare	☐ Common	☐ Abundant
Small garbage in the channel	☒ None	☐ Rare	☐ Common	☐ Abundant
Bank Garbage	☐ None	☒ Rare	☐ Common	☐ Abundant

Briefly describe the kinds of garbage observed: plastic bottles, Pd PL Pfd, Styrofoam plates, plastic container

12. Is the site located in a wildlife preserve with large wildlife (i.e waterfowl) population? ☐ Yes ☒ No

13. Please document any other relevant information regarding recreational activities and the water body in general (for example, area outside of the stream reach evaluated).

_____

Field Data Sheet - Basic RUAA Survey

Stream Flow (Discharge) Measurement

Stream: Caney Creek above tidal Date:

Site: 18 Site

Description: Grisham Rd @ Caney Creek

Time Begin: Time End: Meter Type: Sontek Flowtracker

Observers: Stream Width*: Section Width (W):

Observations:

No flow taken

Too deep

Section Midpoint (ft) (m)	Section Depth (ft) (m) (cm) (D)	Observational Depth** (ft)(m)	Velocity (V)		Flow (Q) (m^3/s) (ft^3/s) Q = (W)(D)(V)
			At Point (ft/s)(m/s)	Average (ft/s)(m/s)	

19

Field Data Sheets – Basic RUAA Survey

(should be completed for each site)

Data Collectors & Contact Information:	P. Lolcamath, K. Condra, L. Ray, L. Bonaventura
Date & Time: 05/14/10 12:05-12:34	County Name: Matagorda
Stream Name: Caney Creek above tidal	
Segment No. or nearest downstream Segment No.: 1305	
Description of Site: Fay Ranch Rd @ Caney Creek	

At any point during the Basic RUAA Survey it becomes apparent that primary contact recreation is clearly the use for the water body the investigator should stop conducting the UAA.

A. Stream Characteristics:

1. Check the following channel flow status that applies.

dry | no flow X low normal | high flooded

2. Check the following stream type that applies on the day of the survey:

Ephemeral: A stream which flows only during or immediately after a rainfall event, and contains no refuge pools capable of sustaining a viable community of aquatic organisms.

☐ Intermittent: A stream which has a period of zero flow for at least one week during most years. Where flow records are available, a stream with a 7Q2 flow of less than 0.1 cubic feet per second is considered intermittent.

☐ Intermittent w/ perennial pools: An intermittent stream which maintains persistent pools even when flow in the stream is less than 0.1 cubic feet per second.

X Perennial: A stream which flows continuously throughout the year. Perennial streams have a 7Q2 equal to or greater than 0.1 cubic feet per second.

☐ Designated or unclassified tidal stream: A stream that is tidally influenced. If you checked this box, you will need to contact the Water Quality Standards Group and evaluate whether or not a bathing beach is located along the tidal stream and whether or not a bathing beach is located along the estuary, bay or Gulf water that the tidal stream flows into.

3. Streamflow

Use USGS gage data (if a gage is located at a site or within a quarter mile of a site) or use the Stream Flow (Discharge) Measurement Form and follow the procedures outlined in the most recent TCEQ Surface Water Quality Monitoring Procedures, Volume 1, RG-415. If USGS gage data is used for a site, include that information as an attachment and list the streamflow on the sampling date below. If the stream flow taken at one site is representative of the flow at another site(s), then that flow can be used as the observed flow and should be documented below. If the stream flow measured at one site is different from another site, then stream flow should be taken at both sites. _____ cfs no flow taken

4. Water Quality Data (Field Parameters)

Field parameters should be collected in accordance with the procedures outlined in the most recent TCEQ Surface Water Quality Monitoring Procedures, Volume 1.

Air Temp 28 °C Water Temp 28 °C Secchi 0.364 m

5. Riparian Zone (Mark dominant categories with L (Left Bank) and R (Right Bank). Bank orientation is determined by the investigator facing downstream.)

_____ Forest	_____ Urban	_____ Rip rap
_____ Shrub dominated corridor	R/L Pasture	_____ Concrete
_____ Herbaceous marsh	_____ Row crops	Other (specify): _____
R/L Mowed/maintained corridor	_____ Denuded/Eroded bank	

6. Ease of bank access to the water body: X Easy ☐ Moderately easy ☐ Moderately difficult ☐ Difficult

7. Please describe access opportunities or explain why the site is not easily accessible (Attach photos for documentation):

Unpaved road (appears to be a private road) off of 457
wood & metal bridge crossing,

8. Dominant Primary Substrate

☐ Cobble X Sand ☐ Silt ☐ Mud/Clay X Gravel ☐ Bedrock ☐ Rip rap ☐ Concrete

Field Data Sheets – Basic RUAA Survey

Stream Name Caney Creek above tidal Site: 19
Date: 05/14/10 Time: 12:05 - 12:34

B. Primary Contact Water Recreation Evaluation:
- Primary contact recreation draft definition: Water recreation activities, such as wading by children, swimming, water skiing, diving, tubing, surfing, and whitewater kayaking, canoeing, and rafting, involving a significant risk of ingestion of water.

1. Were water recreation activities that involve a significant risk of ingestion (full body immersion) observed at this site?
☐ Yes ☒ No primary contact recreation activities were observed

a. Check the following boxes of primary contact recreation activities observed at the time of the sampling event at the site (Attach photos of the activities or lack of activities).

☐ Wading-Children ☐ Tubing ☒ No primary contact activities that commonly occur were observed
☐ Wading-Adults ☐ Surfing
☐ Swimming ☐ Whitewater-kayaking, canoeing, rafting
☐ Water skiing ☐ Other: _____
☐ Diving ☐ frequent public swimming-created by publicly owned land or commercial operations

b. Check the number of individuals observed at the site: ☒ None ☐ 1-10 ☐ 11-20 ☐ 20-50 ☐ greater than 50

c. Check the following that apply regarding the individuals proximity to the water body.
☐ Water in mouth or nose of the individual ☐ Primary touch: Individual's body (or portion) immersed in water
☐ Secondary touch: fishing, pets and related contact with water ☐ Individual is in a boat touching water
☐ Individual is on shore near water within 8 meters (25ft) of water ☐ Individual is well away from water between 8 and 30 meters (100 ft) ☒ Not applicable

2. If primary contact recreation activities are not observed, describe the physical characteristics of the water body that may hinder the frequency of primary contact (depth, etc.) (Attach photos, etc. for documentation).
The creek depth is deep (> 4 ft) 7.2192a

3. Describe if there is public access (e.g. parks, roads, etc.) (Attach photos, maps, etc. for documentation).
Unpaved road off of the main rd. appear to be private (had fence), a metal & wooden bridge.

4. Is an area with primary contact recreation activities or a bathing beach (e.g. state/local parks with swimming, etc.) located near (e.g. within 5 miles upstream and downstream) this site? N/A NO

C. Secondary Contact Water Recreation Evaluation:
- Secondary contact recreation 1: Water recreation activities, such as fishing, commercial and recreational boating, and limited body contact incidental to shoreline activity, not involving a significant risk of water ingestion and that commonly occur.
- Secondary contact recreation 2: Water recreation activities, such as fishing, commercial and recreational boating, and limited body contact incidental to shoreline activity, not involving a significant risk of water ingestion but that occur less frequently than for secondary contact recreation 1 due to (1) physical characteristics of the water body and/or (2) limited public access.

1. Were water recreation activities observed at the site, but the nature of the recreation does not involve a significant risk of ingestion (e.g. secondary contact recreation activities)? ☐ Yes ☒ No secondary contact recreation activities were observed

a. Check the following boxes of secondary contact recreation activities that were observed at the time of the sampling event at the site (Attach photos of activities or lack of activities).

☐ Fishing
☐ Boating-commercial, recreational
☐ Non-whitewater-kayaking, rafting, canoeing
☒ No secondary contact recreation activities were observed
☐ Other secondary contact activities: _____

Field Data Sheets – Basic RUAA Survey

Stream Name Caney Creek above tidal Site: 19
Date: 05/14/10 Time: 12:05 – 12:34

b. Check the number of individuals observed at the site.
X None _ 1-10 _ 11-20 _ 20-50 _ greater than 50

c. Check the following that apply regarding the individuals proximity to the water body.
☐ Secondary touch: fishing, pets and related contact with water ☐ In a boat touching water
☐ Body on shore near water within 8 meters (25ft) of water ☐ Body well away from water between 8 and 30 meters (100 ft) N/A

2. If secondary contact recreation activities are not observed, describe the physical characteristics of the water body that may hinder the frequency of secondary contact (Attach photos, etc. for documentation).
same as before

3. If secondary contact recreation activities are observed, how often do water recreational activities occur that do not involve a significant risk of water ingestion? frequently infrequently N/A
Please describe how often the activities occur? X Unknown Never Daily Monthly Yearly

4. If infrequently, what is the reason? physical characteristics of the water body limited public access
☐ other
If other, list reasons: N/A

5. Describe the physical characteristics of the water body that hinders the frequency of secondary contact recreation (depth, etc.) (Attach photos or depth measurements, etc. for documentation).
depth >4 ft

6. Describe why there is limited public access (e.g. lack of roads, river or stream banks overgrown, etc.) (Attach photos, maps, etc. for documentation).
Unpaved road, ~~the~~ appears to be private road (fence)(no gate)

D. Noncontact Recreation Evaluation N/A → PL

Noncontact recreation applies to water bodies where recreation activities do not involve a significant risk of water ingestion, and where primary and secondary contact recreation uses do not occur because of unsafe conditions, such as barge traffic.

1. Provide site-specific information and documentation (including photographs) regarding unsafe conditions, recreation activities, and presence or absence of water recreation activities.
Water >4 ft deep. unable to wade

Field Data Sheets – Basic RUAA Survey

Stream Name Caney Creek above tidal Site: 19
Date: 5/19/10 FDS Page 3 of 8 Time: 1205 - 12:34

E. Stream Channel and Substantial Pools
Please check the following which best describes the river or stream: _ Wadeable X Non-wadeable

1. Wadeable Streams
Determine whether or not the average depth at the thalweg is greater than 0.5 meters and if there are substantial pools with a depth of 1 meter or greater. Walk an approximately 300 meter reach (total) at the site and take the following measurements within the 300 meter reach. Measurements should be taken during base flow conditions (sustained or typical dry, warm-weather flows between rainfall events, excluding unusual antecedent conditions of drought or wet weather

Also, take photos facing upstream, downstream, left bank, and right bank at the 30 meters, 150 meters, and 300 meters.
Photos #s (30 meters) Upstream____ Downstream____ Left Bank ____ Right Bank____
Photos #s (150 meters) Upstream____ Downstream____ Left Bank ____ Right Bank____
Photos #s (300 meters) Upstream____ Downstream____ Left Bank ____ Right Bank____

a) Substantial pools - Measure the length of each pool (if > 10 pools only measure 10 pools), the width (at the widest point), and the deepest depth. A substantial pool is considered a pool greater than 10 meters in length for the purposes of a Basic RUAA Survey. If depth and/or width measurements were not attainable, explain why.

	Length (meters)	Width (meters)	Depth (meters)
Pool 1			
Pool 2			
Pool 3			
Pool 4			
Pool 5			
Pool 6			
Pool 7			
Pool 8			
Pool 9			
Pool 10			

b)Average depth at the thalweg –Take depth measurements approximately every 30 meters to calculate an average depth at the thalweg (at least 10 measurements needed). If depth and/or width measurements were not attainable, explain why.

Distance	Depth (meters)
30 meters	
60 meters	
90 meters	
120 meters	
150 meters	
180 meters	
210 meters	
240 meters	
270 meters	
300 meters	
Average	

Field Data Sheets – Basic RUAA Survey

Stream Name Caney Creek above tidal Site: 19
Date: 5/19/10 Time: 1205 - 12:34

c) Stream width - Measure (1) the width at one point which represents the typical average width of the 300 meter reach; (2) the width at the narrowest point of the stream within the 300 meter reach; and (3) the width at the widest point of the stream within the 300 meter reach.

Measurement Type	Width (meters)
Typical Average Width of 300 meter reach	
Width at narrowest point of the stream within 300 meter reach	
Width at the widest point of the stream within 300 meter reach	

d) Is there sufficient water within a 300 meter stream reach during base flow conditions to support primary contact recreation? ☒ Yes ☐ No
COMMENTS:

2. Non-wadeable Streams
If accessible, take 10 width measurements which represent typical widths of the 300 meter reach. If the water is too deep and not accessible record the estimated average width of the water body.

Also, take photos facing upstream, downstream, left bank, and right bank at .
Photos #s (30 meters) Upstream ✓ Downstream ✓ Left Bank ✓ Right Bank ✓
Photos #s (150 meters) Upstream ✓ Downstream ✓ Left Bank ✓ Right Bank ✓
Photos #s (300 meters) Upstream ✓ Downstream ✓ Left Bank ✓ Right Bank ✓

# Measurements	Width (meters)
1	27m
2	26
3	28
4	25
5	25
6	26
7	26
8	23
9	23
10	26

-at bridge
-going upstream of bridge
downstream of bridge

Note: Depth facing upstream - 1.5 m
Depth facing downstream - 1.75 m } taken from bridge

Field Data Sheets – Basic RUAA Survey

Stream Name: Caney Creek above tidal Site: 19
Date: 05/14/10 Time: 12:05 - 12:34

F. Additional RUAA Information

1. Check the following activities observed over the site reach.

- ☐ Drinking or water in mouth
- ☐ Bathing
- ☐ Walking
- ☐ Jogging/running
- ☐ Bicycling
- ☐ Standing
- ☐ Sitting
- ☐ Lying down/sleeping
- ☐ Playing on shoreline
- ☐ Picnicking
- ☐ Motorcycle/ATV
- ☐ Hunting/Trapping
- ☐ Wildlife watching
- ☒ None
- ☐ Other: _____

2. Are there permanent or long-term hydrologic modifications that are constructed and operated in a way that affects the recreational uses? ☐ Yes ☒ No (If yes, please provide supporting documentation and photos.)
Comments: _____

3. Check any channel obstructions that apply (Attach photos).

- ☐ Culverts
- ☐ Barbed wire
- ☐ Utility pipe
- ☐ Fences
- ☐ Dams
- ☐ Other (specify): _____
- ☐ Log jams
- ☐ Thick vegetation
- ☐ Rip rap
- ☐ Low bridges
- ☐ Water control structure
- ☒ None

4. Check all surrounding conditions that promote recreational activities (Attach photos of evidence or unusual items of interest).

- ☐ Campgrounds
- ☐ Playgrounds
- ☐ Rural area
- ☐ Residential
- ☐ National forests
- ☐ Urban/suburban location
- ☐ Golf Course
- ☐ Sports Field
- ☐ Stairs/walkway
- ☐ Boating access (ramps)
- ☐ Beach
- ☒ Bridge crossing
- ☐ Commercial boating
- ☐ Trails/paths (hiking/biking)
- ☐ Paved parking lot
- ☐ Unimproved parking lot
- ☒ Roads (paved/unpaved)
- ☐ Populated area
- ☐ Docks or rafts
- ☐ Commercial outfitter
- ☐ Nearby school
- ☐ Power Line Corridor
- ☐ Parks (national/city/county/state)
- ☐ Public Property
- ☐ Other: _____
- ☐ None of the Above

Comments: barn on the right bank on downstream of bridge.

5. Check all surrounding conditions that impede recreational activities (Attach photos of evidence or unusual items of interest).

- ☐ Private Property
- ☐ No trespass sign
- ☐ Wildlife
- ☐ Steep slopes
- ☐ No public access
- ☐ No roads
- ☐ Fence
- ☐ Barge/ship traffic
- ☐ Industrial
- ☒ None of the Above
- ☐ Other: _____

Comments: Appear to be private property.

6. Check any indications of human use (Attach photos).

- ☒ Roads
- ☐ Rope swings
- ☐ Dock/platform
- ☐ Foot paths/prints
- ☐ Other: _____
- ☐ RV/ATV Tracks
- ☐ Camping Sites
- ☐ Fire pit/ring
- ☐ Fishing Tackle
- ☐ NPDES Discharge
- ☐ Gates on corridor
- ☐ Children's toys
- ☐ Remnant's of Kid's play
- ☐ Organized event
- ☐ No Human Presence

Comments: _____

Field Data Sheets – Basic RUAA Survey

Stream Name Caney Creek above tidal Site: 19
Date: 05/14/10 Time: 12:05 - 12:34

7. Check all water characteristics that apply (Attach photos).

Aquatic Vegetation:	absent	rare	X common	abundant	
Algae Cover:	absent	X rare	common	abundant	
Odor:	X none	rare	common	abundant	
Color:	clear	green	red	X brown	black
Bottom Deposit:	sludge	solids	X fine sediments	none	other
Water Surface:	X clear	scum	foam	debris	oil

Other:

8. Vertebrates Observed within 300 meter reach

Snakes	X None	slight presence	moderate presence	large presence
Water Dependent Birds	None	X slight presence	moderate presence	large presence
Alligators	X None	slight presence	moderate presence	large presence

Comments:

9. Mammals Observed within 300 meter reach

Wild	X None	slight presence	moderate presence	large presence
Domesticated Pets	X None	slight presence	moderate presence	large presence
Livestock	~~X None~~ POL	X slight presence	moderate presence	large presence
Feral Hogs	X None	slight presence	moderate presence	large presence

Comments:

10. Evidence of wild animals or evidence of birds, cattle, hogs, etc.
Tracks X Fecal droppings Bird nests

11. Garbage Observed

Large garbage in the channel	X None	Rare	Common	Abundant
Small garbage in the channel	X None	Rare	Common	Abundant
Bank Garbage	~~X None~~ POL	X Rare	Common	Abundant

Briefly describe the kinds of garbage observed: Dead cow on the bank

12. Is the site located in a wildlife preserve with large wildlife (i.e waterfowl) population? Yes X No

13. Please document any other relevant information regarding recreational activities and the water body in general (for example, area outside of the stream reach evaluated).
Large turtle & big fish observed.

Field Data Sheet - Basic RUAA Survey
Stream Flow (Discharge) Measurement

Stream: Caney Creek above tidal Date:
Site: 19 Site
Description: Fay Ranch Rd @ Caney Creek
Time Begin: Time End: Meter Type: Sontek Flowtracker
Observers: Stream Width*: Section Width (W):
Observations:

No flow taken non wadeable

Section Midpoint (ft) (m)	Section Depth (ft) (m) (cm) (D)	Observational Depth** (ft)(m)	Velocity (V) At Point (ft/s)(m/s)	Velocity (V) Average (ft/s)(m/s)	Flow (Q) (m^3/s) (ft^3/s) Q = (W)(D)(V)

20

Field Data Sheets – Basic RUAA Survey

(should be completed for each site)

Data Collectors & Contact Information:	L. Ray, P. Lokongath, K. Cendra, L. Benavides
Date & Time: 05/14/10 10:34 - 11:55	County Name: Matagorda
Stream Name:	Caney Creek above tidal
Segment No. or nearest downstream Segment No.:	1305
Description of Site:	FM 457 @ Caney Creek

At any point during the Basic RUAA Survey it becomes apparent that primary contact recreation is clearly the use for the water body the investigator should stop conducting the UAA.

A. Stream Characteristics:

1. Check the following channel flow status that applies.

☐ dry ☐ no flow ☐ low ☒ normal ☐ high ☐ flooded

2. Check the following stream type that applies on the day of the survey:

Ephemeral: A stream which flows only during or immediately after a rainfall event, and contains no refuge pools capable of sustaining a viable community of aquatic organisms.

☐ Intermittent: A stream which has a period of zero flow for at least one week during most years. Where flow records are available, a stream with a 7Q2 flow of less than 0.1 cubic feet per second is considered intermittent.

☐ Intermittent w/ perennial pools: An intermittent stream which maintains persistent pools even when flow in the stream is less than 0.1 cubic feet per second.

☒ Perennial: A stream which flows continuously throughout the year. Perennial streams have a 7Q2 equal to or greater than 0.1 cubic feet per second.

☐ Designated or unclassified tidal stream: A stream that is tidally influenced. If you checked this box, you will need to contact the Water Quality Standards Group and evaluate whether or not a bathing beach is located along the tidal stream and whether or not a bathing beach is located along the estuary, bay or Gulf water that the tidal stream flows into.

3. Streamflow

Use USGS gage data (if a gage is located at a site or within a quarter mile of a site) or use the Stream Flow (Discharge) Measurement Form and follow the procedures outlined in the most recent TCEQ Surface Water Quality Monitoring Procedures, Volume 1, RG-415. If USGS gage data is used for a site, include that information as an attachment and list the streamflow on the sampling date below. If the stream flow taken at one site is representative of the flow at another site(s), then that flow can be used as the observed flow and should be documented below. If the stream flow measured at one site is different from another site, then stream flow should be taken at both sites. 0.995 cfs

4. Water Quality Data (Field Parameters)

Field parameters should be collected in accordance with the procedures outlined in the most recent TCEQ Surface Water Quality Monitoring Procedures, Volume 1.

Air Temp 28 °C Water Temp 26 °C Secchi 0.505 m

5. Riparian Zone (Mark dominant categories with L (Left Bank) and R (Right Bank). Bank orientation is determined by the investigator facing downstream.)

____	Forest	____	Urban	____	Rip rap
R/L	Shrub dominated corridor	____	Pasture	R/L	Concrete under the bridge.
____	Herbaceous marsh	____	Row crops		Other (specify): ____
____	Mowed/maintained corridor	____	Denuded/Eroded bank		

6. Ease of bank access to the water body: ☒ Easy ☐ Moderately easy ☐ Moderately difficult ☐ Difficult

7. Please describe access opportunities or explain why the site is not easily accessible (Attach photos for documentation):

bridge crossing, concrete slope under the bridge, parking area on the right bank

8. Dominant Primary Substrate

☐ Cobble ☒ Sand ☐ Silt ☐ Mud/Clay ☒ Gravel ☐ Bedrock ☐ Rip rap ☐ Concrete

Field Data Sheets – Basic RUAA Survey

Stream Name Caney Creek above tidal Site: 20
Date: 05/14/16 Time: 10:34 - 11:53

B. Primary Contact Water Recreation Evaluation:
- Primary contact recreation draft definition: Water recreation activities, such as wading by children, swimming, water skiing, diving, tubing, surfing, and whitewater kayaking, canoeing, and rafting, involving a significant risk of ingestion of water.

1. Were water recreation activities that involve a significant risk of ingestion (full body immersion) observed at this site?
☐ Yes ☒ No primary contact recreation activities were observed

a. Check the following boxes of primary contact recreation activities observed at the time of the sampling event at the site (Attach photos of the activities or lack of activities).

☐ Wading-Children ☐ Tubing ☒ No primary contact activities that commonly occur were observed
☐ Wading-Adults ☐ Surfing
☐ Swimming ☐ Whitewater-kayaking, canoeing, rafting
☐ Water skiing ☐ Other: _____
☐ Diving ☐ frequent public swimming-created by publicly owned land or commercial operations

b. Check the number of individuals observed at the site: ☒ None ☐ 1-10 ☐ 11-20 ☐ 20-50 ☐ greater than 50

c. Check the following that apply regarding the individuals proximity to the water body.
☐ Water in mouth or nose of the individual ☐ Primary touch: Individual's body (or portion) immersed in water
☐ Secondary touch: fishing, pets and related contact with water ☐ Individual is in a boat touching water
☐ Individual is on shore near water within 8 meters (25ft) of water ☐ Individual is well away from water between 8 and 30 meters (100 ft) ☒ Not applicable

2. If primary contact recreation activities are not observed, describe the physical characteristics of the water body that may hinder the frequency of primary contact (depth, etc.) (Attach photos, etc. for documentation).
The water is shallow, underbridge, rock bottom covered with vegetation & algae, debris in water,

3. Describe if there is public access (e.g. parks, roads, etc.) (Attach photos, maps, etc. for documentation).
bridge crossing.

4. Is an area with primary contact recreation activities or a bathing beach (e.g. state/local parks with swimming, etc.) located near (e.g. within 5 miles upstream and downstream) this site? NA NO

C. Secondary Contact Water Recreation Evaluation:
- Secondary contact recreation 1: Water recreation activities, such as fishing, commercial and recreational boating, and limited body contact incidental to shoreline activity, not involving a significant risk of water ingestion and that commonly occur.
- Secondary contact recreation 2: Water recreation activities, such as fishing, commercial and recreational boating, and limited body contact incidental to shoreline activity, not involving a significant risk of water ingestion but that occur less frequently than for secondary contact recreation 1 due to (1) physical characteristics of the water body and/or (2) limited public access.

1. Were water recreation activities observed at the site, but the nature of the recreation does not involve a significant risk of ingestion (e.g. secondary contact recreation activities)? ☐ Yes ☒ No secondary contact recreation activities were observed

a. Check the following boxes of secondary contact recreation activities that were observed at the time of the sampling event at the site (Attach photos of activities or lack of activities).

☐ Fishing
☐ Boating-commercial, recreational
☐ Non-whitewater-kayaking, rafting, canoeing
☒ No secondary contact recreation activities were observed
☐ Other secondary contact activities: _____

Field Data Sheets – Basic RUAA Survey

Stream Name Caney Creek above tidal Site: 20
Date: 05/14/10 Time: 1034-1153

b. Check the number of individuals observed at the site.
X None _ 1-10 _ 11-20 _ 20-50 _ greater than 50

c. Check the following that apply regarding the individuals proximity to the water body.
☐ Secondary touch: fishing, pets and related contact with water ☐ In a boat touching water
☐ Body on shore near water within 8 meters (25ft) of water ☐ Body well away from water between 8 and 30 meters (100 ft) N/A

2. If secondary contact recreation activities are not observed, describe the physical characteristics of the water body that may hinder the frequency of secondary contact (Attach photos, etc. for documentation).

Same as before

3. If secondary contact recreation activities are observed, how often do water recreational activities occur that do not involve a significant risk of water ingestion? ☐ frequently ☐ infrequently N/A
Please describe how often the activities occur? X Unknown ☐ Never ☐ Daily ☐ Monthly ☐ Yearly

4. If infrequently, what is the reason? ☐ physical characteristics of the water body ☐ limited public access ☐ other
If other, list reasons: N/A

5. Describe the physical characteristics of the water body that hinders the frequency of secondary contact recreation (depth, etc.) (Attach photos or depth measurements, etc. for documentation).

Same as before

6. Describe why there is limited public access (e.g. lack of roads, river or stream banks overgrown, etc.) (Attach photos, maps, etc. for documentation).

N/A

D. Noncontact Recreation Evaluation N/A

Noncontact recreation applies to water bodies where recreation activities do not involve a significant risk of water ingestion, and where primary and secondary contact recreation uses do not occur because of unsafe conditions, such as barge traffic.

1. Provide site-specific information and documentation (including photographs) regarding unsafe conditions, recreation activities, and presence or absence of water recreation activities.

Field Data Sheets – Basic RUAA Survey

Stream Name Caney Creek above tidal Site: 20
Date: 5/14/10 FDS Page 3 of 8 Time: 1034 – 11:53

E. Stream Channel and Substantial Pools
Please check the following which best describes the river or stream: X Wadeable ☐ Non-wadeable

1. Wadeable Streams
Determine whether or not the average depth at the thalweg is greater than 0.5 meters and if there are substantial pools with a depth of 1 meter or greater. Walk an approximately 300 meter reach (total) at the site and take the following measurements within the 300 meter reach. Measurements should be taken during base flow conditions (sustained or typical dry, warm-weather flows between rainfall events, excluding unusual antecedent conditions of drought or wet weather

Also, take photos facing upstream, downstream, left bank, and right bank at the 30 meters, 150 meters, and 300 meters.
Photos #s (30 meters) Upstream ✓ Downstream ✓ Left Bank ✓ Right Bank ✓
Photos #s (150 meters) Upstream ✓ Downstream ✓ Left Bank ✓ Right Bank ✓
Photos #s (300 meters) Upstream____ Downstream____ Left Bank ____ Right Bank____

a) Substantial pools - Measure the length of each pool (if > 10 pools only measure 10 pools), the width (at the widest point), and the deepest depth. A substantial pool is considered a pool greater than 10 meters in length for the purposes of a Basic RUAA Survey. If depth and/or width measurements were not attainable, explain why.

	Length (meters)	Width (meters)	Depth (meters)
Pool 1			
Pool 2			
Pool 3			
Pool 4			
Pool 5			
Pool 6			
Pool 7			
Pool 8			
Pool 9			
Pool 10			

b)Average depth at the thalweg –Take depth measurements approximately every 30 meters to calculate an average depth at the thalweg (at least 10 measurements needed). If depth and/or width measurements were not attainable, explain why.

Distance	Depth (meters)
30 meters	1.6 ft (0.48 m)
60 meters	3.9 (1.188 m)
90 meters	2.7 (0.822 m)
120 meters	2.0 0.609 m
150 meters	1.2 0.365 m
180 meters	3.8 1.158 m
210 meters	1.3 0.396 m
240 meters	2.6 0.792 m
270 meters	2.4 0.731 m
300 meters	3.8 1.158 m
Average	0.769 m

Field Data Sheets – Basic RUAA Survey

Stream Name Caney Creek above tidal Site: 20
Date: 05/14/10 Time: 1034 - 11:53

F. Additional RUAA Information

1. Check the following activities observed over the site reach.

- ☐ Drinking or water in mouth
- ☐ Bathing
- ☐ Walking
- ☐ Jogging/running
- ☐ Bicycling
- ☐ Standing
- ☐ Sitting
- ☐ Lying down/sleeping
- ☐ Playing on shoreline
- ☐ Picnicking
- ☐ Motorcycle/ATV
- ☐ Hunting/Trapping
- ☐ Wildlife watching
- ☒ None
- ☐ Other: _____

2. Are there permanent or long-term hydrologic modifications that are constructed and operated in a way that affects the recreational uses? ☐ Yes ☒ No (If yes, please provide supporting documentation and photos.)
Comments: _____

3. Check any channel obstructions that apply (Attach photos).

- ☐ Culverts
- ☐ Barbed wire
- ☐ Utility pipe
- ☐ Fences
- ☐ Dams
- ☒ Other (specify): Debris
- ☐ Log jams
- ☒ Thick vegetation
- ☐ Rip rap
- ☐ Low bridges
- ☐ Water control structure
- ☐ None

4. Check all surrounding conditions that promote recreational activities (Attach photos of evidence or unusual items of interest).

- ☐ Campgrounds
- ☐ Playgrounds
- ☐ Rural area
- ☒ Residential
- ☐ National forests
- ☐ Urban/suburban location
- ☐ Golf Course
- ☐ Sports Field
- ☐ Stairs/walkway
- ☐ Boating access (ramps)
- ☐ Beach
- ☒ Bridge crossing
- ☐ Commercial boating
- ☐ Trails/paths (hiking/biking)
- ☒ Paved parking lot
- ☐ Unimproved parking lot
- ☒ Roads (paved/unpaved)
- ☐ Populated area
- ☐ Docks or rafts
- ☐ Commercial outfitter
- ☐ Nearby school
- ☐ Power Line Corridor
- ☐ Parks (national/city/county/state)
- ☐ Public Property
- ☐ Other: _____
- ☐ None of the Above

Comments: _____

5. Check all surrounding conditions that impede recreational activities (Attach photos of evidence or unusual items of interest).

- ☐ Private Property
- ☐ No trespass sign
- ☐ Wildlife
- ☒ Steep slopes
- ☐ No public access
- ☐ No roads
- ☒ Fence on the bank
- ☐ Barge/ship traffic
- ☐ Industrial
- ☐ None of the Above
- ☐ Other: _____

Comments: Steep bank slopes both upstream & downstream of bridge,

6. Check any indications of human use (Attach photos).

- ☒ Roads
- ☐ Rope swings
- ☐ Dock/platform
- ☐ Foot paths/prints
- ☐ Other: _____
- ☐ RV/ATV Tracks
- ☐ Camping Sites
- ☐ Fire pit/ring
- ☐ Fishing Tackle
- ☐ NPDES Discharge
- ☐ Gates on corridor
- ☐ Children's toys
- ☐ Remnant's of Kid's play
- ☐ Organized event
- ☐ No Human Presence

Comments: _____

Field Data Sheet - Basic RUAA Survey
Stream Flow (Discharge) Measurement

Stream: Caney Creek above tidal Date: 05/14/10
Site: 20 Site
Description: FM 457 @ Caney Creek
Time Begin: 10:50 Time End: Meter Type: Sontek Flowtracker
Observers: P. Lokanath, L. Ruy. Stream Width*: 25.9 Section Width (W): 1.29
Observations:

Section Midpoint (ft)(m)	Section Depth (ft)(m) (cm) (D)	Observational Depth** (ft)(m)	Velocity (V) At Point (ft/s)(m/s)	Velocity (V) Average (ft/s)(m/s)	Flow (Q) (m^3/s)(ft^3/s) Q = (W)(D)(V)
0.64					← too shallow
1.93	0.50			-0.00	0.000
3.22	0.70			0.00	0.000
4.51	0.65			0.00	0.000
5.80	0.65			0.04	0.034
7.09	0.70			-0.01	-0.009
8.38	0.70			0.00	0.000
9.67	0.70			0.01	0.009
10.96	0.75			-0.00	0.000
12.25	0.80			0.16	0.165
13.54 PL	0.90			0.00	0.000
14.~~87~~ 83	0.90			0.34	0.395
16.12	1.0			0.05	0.065
17.41	1.1			0.24	0.341
18.70	1.20			-0.00	0.000
19.99	1.20			0.00	0.000
21.28	1.10 PL			-0.03	-0.004
22.57	~~0.20~~ 0.10			-0.00	0.000
23.86	0.05			0.04	0.000
25.15					→ too shallow

total Q: ~~0.949~~ 0.995 cfs KC 10/28/10

Wind creating countercurrents, lot of aquatic vegetation & some debris in water

E MES

21

Field Data Sheets – Basic RUAA Survey

(should be completed for each site)

Data Collectors & Contact Information:	L. Ray, P. Lokanath, K. Condra, L. Benavides
Date & Time: 05/14/10 09:08-10:22	County Name: Matagorda
Stream Name: Caney Creek above tidal	
Segment No. or nearest downstream Segment No.: 1305	
Description of Site: FM 521 @ Caney Creek	

At any point during the Basic RUAA Survey it becomes apparent that primary contact recreation is clearly the use for the water body the investigator should stop conducting the UAA.

A. Stream Characteristics:

1. Check the following channel flow status that applies.
dry ☐ no flow ☐ low ☒ normal ☐ high flooded

2. Check the following stream type that applies on the day of the survey:
Ephemeral: A stream which flows only during or immediately after a rainfall event, and contains no refuge pools capable of sustaining a viable community of aquatic organisms.
☐ Intermittent: A stream which has a period of zero flow for at least one week during most years. Where flow records are available, a stream with a 7Q2 flow of less than 0.1 cubic feet per second is considered intermittent.
☐ Intermittent w/ perennial pools: An intermittent stream which maintains persistent pools even when flow in the stream is less than 0.1 cubic feet per second.
☒ Perennial: A stream which flows continuously throughout the year. Perennial streams have a 7Q2 equal to or greater than 0.1 cubic feet per second.
☐ Designated or unclassified tidal stream: A stream that is tidally influenced. If you checked this box, you will need to contact the Water Quality Standards Group and evaluate whether or not a bathing beach is located along the tidal stream and whether or not a bathing beach is located along the estuary, bay or Gulf water that the tidal stream flows into.

3. Streamflow
Use USGS gage data (if a gage is located at a site or within a quarter mile of a site) or use the Stream Flow (Discharge) Measurement Form and follow the procedures outlined in the most recent TCEQ Surface Water Quality Monitoring Procedures, Volume 1, RG-415. If USGS gage data is used for a site, include that information as an attachment and list the streamflow on the sampling date below. If the stream flow taken at one site is representative of the flow at another site(s), then that flow can be used as the observed flow and should be documented below. If the stream flow measured at one site is different from another site, then stream flow should be taken at both sites. 1.222 cfs

4. Water Quality Data (Field Parameters)
Field parameters should be collected in accordance with the procedures outlined in the most recent TCEQ Surface Water Quality Monitoring Procedures, Volume 1.
Air Temp 28 °C Water Temp 25 °C Secchi >1.12 m

5. Riparian Zone (Mark dominant categories with L (Left Bank) and R (Right Bank). Bank orientation is determined by the investigator facing downstream.)

____ Forest	____ Urban	____ Rip rap
L, R Shrub dominated corridor	____ Pasture	____ Concrete
____ Herbaceous marsh	____ Row crops	Other (specify): ____
____ Mowed/maintained corridor	____ Denuded/Eroded bank	

6. Ease of bank access to the water body: ☐ Easy ☒ Moderately easy ☐ Moderately difficult ☐ Difficult

7. Please describe access opportunities or explain why the site is not easily accessible (Attach photos for documentation): The bank was moderately steep but accessible

8. Dominant Primary Substrate
☐ Cobble ☐ Sand ☐ Silt ☒ Mud/Clay ☐ Gravel ☐ Bedrock ☐ Rip rap ☐ Concrete

Q² OHR

340

QC PC

Field Data Sheets – Basic RUAA Survey

Stream Name Caney Creek above tidal Site: 21
Date: 5/19/10 Time: 0908 - 1022

B. Primary Contact Water Recreation Evaluation:
- Primary contact recreation draft definition: Water recreation activities, such as wading by children, swimming, water skiing, diving, tubing, surfing, and whitewater kayaking, canoeing, and rafting, involving a significant risk of ingestion of water.

1. Were water recreation activities that involve a significant risk of ingestion (full body immersion) observed at this site?
☐ Yes ☒ No primary contact recreation activities were observed
a. Check the following boxes of primary contact recreation activities observed at the time of the sampling event at the site (Attach photos of the activities or lack of activities).

☐ Wading-Children	☐ Tubing	☒ No primary contact activities that commonly occur were observed
☐ Wading-Adults	☐ Surfing	
☐ Swimming	☐ Whitewater-kayaking, canoeing, rafting	
☐ Water skiing	☐ Other: _____	
☐ Diving	☐ frequent public swimming-created by publicly owned land or commercial operations	

b. Check the number of individuals observed at the site: ☐ None ☒ 1-10 ☐ 11-20 ☐ 20-50 ☐ greater than 50

c. Check the following that apply regarding the individuals proximity to the water body.
☐ Water in mouth or nose of the individual ☐ Primary touch: Individual's body (or portion) immersed in water
☐ Secondary touch: fishing, pets and related contact with water ☐ Individual is in a boat touching water
☐ Individual is on shore near water within 8 meters (25ft) of water ☒ Individual is well away from water between 8 and 30 meters (100 ft) ☐ Not applicable
mowing his yard

2. If primary contact recreation activities are not observed, describe the physical characteristics of the water body that may hinder the frequency of primary contact (depth, etc.) (Attach photos, etc. for documentation).
Moderately Steep Bank, Bank was overgrown, muddy bottom, Abundant vegetation

3. Describe if there is public access (e.g. parks, roads, etc.) (Attach photos, maps, etc. for documentation).
Road & Bridge Crossing

4. Is an area with primary contact recreation activities or a bathing beach (e.g. state/local parks with swimming, etc.) located near (e.g. within 5 miles upstream and downstream) this site? ~~10/19~~ no

C. Secondary Contact Water Recreation Evaluation:
- Secondary contact recreation 1: Water recreation activities, such as fishing, commercial and recreational boating, and limited body contact incidental to shoreline activity, not involving a significant risk of water ingestion and that commonly occur.
- Secondary contact recreation 2: Water recreation activities, such as fishing, commercial and recreational boating, and limited body contact incidental to shoreline activity, not involving a significant risk of water ingestion but that occur less frequently than for secondary contact recreation 1 due to (1) physical characteristics of the water body and/or (2) limited public access.

1. Were water recreation activities observed at the site, but the nature of the recreation does not involve a significant risk of ingestion (e.g. secondary contact recreation activities)? ☐ Yes ☒ No secondary contact recreation activities were observed
a. Check the following boxes of secondary contact recreation activities that were observed at the time of the sampling event at the site (Attach photos of activities or lack of activities).
☐ Fishing
☐ Boating-commercial, recreational
☐ Non-whitewater-kayaking, rafting, canoeing
☒ No secondary contact recreation activities were observed
☐ Other secondary contact activities: _____

Field Data Sheets – Basic RUAA Survey

Stream Name Caney Creek above tidal Site: 21
Date: 05/14/10 Time: 0908-1022

b. Check the number of individuals observed at the site.
_ None X 1-10 _ 11-20 _ 20-50 _ greater than 50

c. Check the following that apply regarding the individuals proximity to the water body.
☐ Secondary touch: fishing, pets and related contact with water ☐ In a boat touching water
☐ Body on shore near water within 8 meters (25ft) of water X Body well away from water between 8 and 30 meters (100 ft)

2. If secondary contact recreation activities are not observed, describe the physical characteristics of the water body that may hinder the frequency of secondary contact (Attach photos, etc. for documentation).
Same

3. If secondary contact recreation activities are observed, how often do water recreational activities occur that do not involve a significant risk of water ingestion? frequently infrequently
Please describe how often the activities occur? X Unknown Never Daily Monthly Yearly

4. If infrequently, what is the reason? physical characteristics of the water body limited public access other
If other, list reasons: _____

5. Describe the physical characteristics of the water body that hinders the frequency of secondary contact recreation (depth, etc.) (Attach photos or depth measurements, etc. for documentation).
Same

6. Describe why there is limited public access (e.g. lack of roads, river or stream banks overgrown, etc.) (Attach photos, maps, etc. for documentation).
Same

D. Noncontact Recreation Evaluation

Noncontact recreation applies to water bodies where recreation activities do not involve a significant risk of water ingestion, and where primary and secondary contact recreation uses do not occur because of unsafe conditions, such as barge traffic.

1. Provide site-specific information and documentation (including photographs) regarding unsafe conditions, recreation activities, and presence or absence of water recreation activities.

N/A

Field Data Sheets – Basic RUAA Survey

Stream Name: Caney Creek above tidal Site: 21
Date: 5/14/18 FDS Page 3 of 8 Time: 9:08-1022

E. Stream Channel and Substantial Pools
Please check the following which best describes the river or stream: ☒ Wadeable ☐ Non-wadeable

1. Wadeable Streams
Determine whether or not the average depth at the thalweg is greater than 0.5 meters and if there are substantial pools with a depth of 1 meter or greater. Walk an approximately 300 meter reach (total) at the site and take the following measurements within the 300 meter reach. Measurements should be taken during base flow conditions (sustained or typical dry, warm-weather flows between rainfall events, excluding unusual antecedent conditions of drought or wet weather

Also, take photos facing upstream, downstream, left bank, and right bank at the 30 meters, 150 meters, and 300 meters.
Photos #s (30 meters) Upstream ✓ Downstream ✓ Left Bank ✓ Right Bank ✓
Photos #s (150 meters) Upstream ✓ Downstream ✓ Left Bank ✓ Right Bank ✓
Photos #s (300 meters) Upstream ✓ Downstream ✓ Left Bank ✓ Right Bank ✓

a) Substantial pools - Measure the length of each pool (if > 10 pools only measure 10 pools), the width (at the widest point), and the deepest depth. A substantial pool is considered a pool greater than 10 meters in length for the purposes of a Basic RUAA Survey. If depth and/or width measurements were not attainable, explain why.

	Length (meters)	Width (meters)	Depth (meters)
Pool 1			
Pool 2			
Pool 3			
Pool 4			
Pool 5			
Pool 6			
Pool 7			
Pool 8			
Pool 9			
Pool 10			

b)Average depth at the thalweg –Take depth measurements approximately every 30 meters to calculate an average depth at the thalweg (at least 10 measurements needed). If depth and/or width measurements were not attainable, explain why.

Distance	Depth (meters)	
30 meters	1.3 ft	0.396m
60 meters	3.3	1.005m
90 meters	4.0	1.219 m
120 meters	2.5	0.762 m
150 meters	3.0	0.914 m
180 meters	3.0	0.914 m
210 meters	3.9	1.188 m
240 meters	3.4	1.036m
270 meters	2.6	0.792m
300 meters	3.1 ft	0.944m
Average		0.917m

Field Data Sheets – Basic RUAA Survey

Stream Name Caney Creek above tidal Site: 21
Date: 5/14/10 Time: 9:08-1022

c) Stream width - Measure (1) the width at one point which represents the typical average width of the 300 meter reach; (2) the width at the narrowest point of the stream within the 300 meter reach; and (3) the width at the widest point of the stream within the 300 meter reach.

Measurement Type	Width (meters)
Typical Average Width of 300 meter reach	34.7 ft 10.57 m
Width at narrowest point of the stream within 300 meter reach	20.3 ft 6.18 m
Width at the widest point of the stream within 300 meter reach	37.4 ft 11.39 m

d) Is there sufficient water within a 300 meter stream reach during base flow conditions to support primary contact recreation? ☒ Yes ☐ No
COMMENTS:

2. Non-wadeable Streams
If accessible, take 10 width measurements which represent typical widths of the 300 meter reach. If the water is too deep and not accessible record the estimated average width of the water body.

Also, take photos facing upstream, downstream, left bank, and right bank at .
Photos #s (30 meters) Upstream____ Downstream____ Left Bank ____ Right Bank____
Photos #s (150 meters) Upstream____ Downstream____ Left Bank ____ Right Bank____
Photos #s (300 meters) Upstream____ Downstream____ Left Bank ____ Right Bank____

# Measurements	Width (meters)
1	
2	
3	
4	
5	
6	
7	
8	
9	
10	

Field Data Sheets – Basic RUAA Survey

Stream Name Caney Creek above tidal Site: 21
Date: 05/14/10 Time: 0908-1022

F. Additional RUAA Information

1. Check the following activities observed over the site reach.

- ☐ Drinking or water in mouth
- ☐ Bathing
- ☐ Walking
- ☐ Jogging/running
- ☐ Bicycling
- ☐ Standing
- ☐ Sitting
- ☐ Lying down/sleeping
- ☐ Playing on shoreline
- ☐ Picnicking
- ☐ Motorcycle/ATV
- ☐ Hunting/Trapping
- ☐ Wildlife watching
- ☐ None
- ✓ Other: mowing lawn

2. Are there permanent or long-term hydrologic modifications that are constructed and operated in a way that affects the recreational uses? ☒ Yes ☐ No (If yes, please provide supporting documentation and photos.)
Comments: _____

3. Check any channel obstructions that apply (Attach photos).

- ☐ Culverts
- ☐ Barbed wire
- ☐ Utility pipe
- ☐ Fences
- ☐ Dams
- ☐ Other (specify): _____
- ☐ Log jams
- ☐ Thick vegetation
- ☒ Rip rap
- ☐ Low bridges
- ☐ Water control structure
- ☐ None

4. Check all surrounding conditions that promote recreational activities (Attach photos of evidence or unusual items of interest).

- ☐ Campgrounds
- ☐ Playgrounds
- ☐ Rural area
- ☒ Residential
- ☐ National forests
- ☐ Urban/suburban location
- ☐ Golf Course
- ☐ Sports Field
- ☐ Stairs/walkway
- ☐ Boating access (ramps)
- ☐ Beach
- ☒ Bridge crossing
- ☐ Commercial boating
- ☐ Trails/paths (hiking/biking)
- ☐ Paved parking lot
- ☐ Unimproved parking lot
- ☒ Roads (paved/unpaved)
- ☐ Populated area
- ☐ Docks or rafts
- ☐ Commercial outfitter
- ☐ Nearby school
- ☐ Power Line Corridor
- ☐ Parks (national/city/county/state)
- ☐ Public Property
- ☐ Other: _____
- ☐ None of the Above

Comments: _____

5. Check all surrounding conditions that impede recreational activities (Attach photos of evidence or unusual items of interest).

- ☐ Private Property
- ☐ No trespass sign
- ☐ Wildlife
- ☒ Steep slopes
- ☐ No public access
- ☐ No roads
- ☐ Fence
- ☐ Barge/ship traffic
- ☐ Industrial
- ☐ None of the Above
- ☐ Other: _____

Comments: _____

6. Check any indications of human use (Attach photos).

- ☒ Roads
- ☐ Rope swings
- ☐ Dock/platform
- ☒ Foot paths/prints
- ☐ Other: _____
- ☐ RV/ATV Tracks
- ☐ Camping Sites
- ☐ Fire pit/ring
- ☒ Fishing Tackle
- ☐ NPDES Discharge
- ☐ Gates on corridor
- ☐ Children's toys
- ☐ Remnant's of Kid's play
- ☐ Organized event
- ☐ No Human Presence

Comments: _____

Field Data Sheets – Basic RUAA Survey

Stream Name Caney Creek above tidal Site: 21
Date: 05/14/10 Time: 0908-1022

7. Check all water characteristics that apply (Attach photos).

Aquatic Vegetation: absent rare common X abundant
Algae Cover: absent X rare common abundant
Odor: X none rare common abundant
Color: X clear green red brown black
Bottom Deposit: sludge solids fine sediments none X other mud
Water Surface: X clear scum foam debris oil
Other:

8. Vertebrates Observed within 300 meter reach

Snakes	X None	slight presence	moderate presence	large presence
Water Dependent Birds	X None	slight presence	moderate presence	large presence
Alligators	X None	slight presence	moderate presence	large presence

Comments:

9. Mammals Observed within 300 meter reach

Wild	X None	slight presence	moderate presence	large presence
Domesticated Pets	X None	slight presence	moderate presence	large presence
Livestock	X None	slight presence	moderate presence	large presence
Feral Hogs	X None	slight presence	moderate presence	large presence

Comments:

10. Evidence of wild animals or evidence of birds, cattle, hogs, etc.
Tracks Fecal droppings Bird nests

11. Garbage Observed

Large garbage in the channel	None	X Rare	Common	Abundant
Small garbage in the channel	X None	Rare	Common	Abundant
Bank Garbage	X None	Rare	Common	Abundant

Briefly describe the kinds of garbage observed: plastic container

12. Is the site located in a wildlife preserve with large wildlife (i.e waterfowl) population? Yes X No

13. Please document any other relevant information regarding recreational activities and the water body in general (for example, area outside of the stream reach evaluated).

Blue crabs

Field Data Sheet - Basic RUAA Survey
Stream Flow (Discharge) Measurement

Stream: Caney Creek above tidal Date: 5/14/2010
Site: 21 Site
Description: FM 521 @ Caney Creek
Time Begin: 0930 Time End: 1011 Meter Type: Sontek Flowtracker
Observers: P. Lokanath, C. Ray Stream Width*: 22.8 Section Width (W): 1.14
Observations:

Section Midpoint (ft)(m)	Section Depth (ft)(m) (cm) (D)	Observational Depth** (ft)(m)	Velocity (V) At Point (ft/s)(m/s)	Velocity (V) Average (ft/s)(m/s)	Flow (Q) (m^3/s)(ft^3/s) Q = (W)(D)(V)
0.57	0.40			-0.02	-0.009
1.71	0.45			0.18	0.092
2.85	0.80			0.13	0.119
3.99	1.10			0.20	0.251
5.13	1.10			0.10	0.125
6.27	1.00			0.07	0.080
7.41	1.20			-0.00	* 0.000
8.55	1.25			0.04	0.057
9.69	1.30			0.08	0.119
10.83	1.30			0.00	* 0.000
11.97	1.40			0.04	0.064
13.11	1.40			0.01	* 0.016
14.25	1.40			-0.00	* 0.000
15.39	1.40			0.01	0.015
16.53	1.30			~~0.00~~	* 0.01 LR 5/14/2010
17.67	1.30			~~0.01~~	0.00 LR 5/14/2010
18.81	1.25			0.16	0.228
19.95	1.25			-0.00	0.000
21.09	0.85			0.03	0.050
22.23	0.45			-0.00	* 0.000

Flow
0.015
0.00

Note: Wind was blowing the water upstream.

* Abundant Aquatic vegetation Total Q 1.182

E. MES