Edwards Aquifer Protection Program Roadway Checklist

- **Edwards Aquifer Application Cover Page (TCEQ-20705)**
- **Edwards Aquifer Protection Program Roadway Application (TCEQ-20872)**

  Attachment A - Road Map
  Attachment B - USGS Quadrangle
  Attachment C - Project Description
  Attachment D - Factors Affecting Surface Water Quality
  Attachment E - BMPs for Upgradient (Offsite) Stormwater
  Attachment F - BMPs for On-site Stormwater
  Attachment G - Construction Plans
  Attachment H - Inspection, Maintenance, Repair and Retrofit Plan
  Attachment I - Pilot-Scale Field Testing Plan
  Attachment J - Measures for Minimizing Surface Stream Contamination
  Attachment K - Volume and Character of Stormwater

- **Geologic Assessment Form (TCEQ-0585)**

  - *Required for site over the Recharge zone*

  Attachment A - Geologic Assessment Table (TCEQ-0585-Table)
  Attachment B - Stratigraphic Column
  Attachment C - Site Geology
  Attachment D - Site Geologic Map(s)

- **Organized Sewage Collection System Plan (TCEQ-0582)**

  Attachment A - SCS Engineering Design Report
  Attachment B - Justification and Calculations for Deviation in Straight Alignment Without Manholes
  Attachment C - Justification for Variance from Maximum Manhole Spacing
  Attachment D – Calculations for Slopes for Flows Greater Than 10.0 Feet Per Second
  Site Plan
  Final Plan and Profile Sheets (see Construction Plans)

- **Temporary Stormwater Section (TCEQ-0602)**

  Attachment A - Spill Response Actions
  Attachment B - Potential Sources of Contamination
  Attachment C - Sequence of Major Activities
  Attachment D - Temporary Best Management Practices and Measures
  Attachment E - Request to Temporarily Seal a Feature (if requested)
  Attachment F - Structural Practices
  Attachment G - Drainage Area Map
  Attachment H - Temporary Sediment Pond(s) Plans and Calculations
  Attachment I - Inspection and Maintenance for BMPs
  Attachment J - Schedule of Interim and Permanent Soil Stabilization Practices

- **Agent Authorization Form (TCEQ-0599)**
- **Application Fee Form (TCEQ-0574)**
- **Core Data Form (TCEQ-10400)**

Texas Commission on Environmental Quality

Edwards Aquifer Application Cover Page

Our Review of Your Application

The Edwards Aquifer Program staff conducts an administrative and technical review of all applications. The turnaround time for administrative review can be up to 30 days as outlined in 30 TAC 213.4(e). Generally administrative completeness is determined during the intake meeting or within a few days of receipt. The turnaround time for technical review of an administratively complete Edwards Aquifer application is 90 days as outlined in 30 TAC 213.4(e). Please know that the review and approval time is directly impacted by the quality and completeness of the initial application that is received. In order to conduct a timely review, it is imperative that the information provided in an Edwards Aquifer application include final plans, be accurate, complete, and in compliance with 30 TAC 213.

Administrative Review

1. Edwards Aquifer applications must be deemed administratively complete before a technical review can begin. To be considered administratively complete, the application must contain completed forms and attachments, provide the requested information, and meet all the site plan requirements. The submitted application and plan sheets should be final plans. Please submit one full-size set of plan sheets with the original application, and half-size sets with the additional copies.

   To ensure that all applicable documents are included in the application, the program has developed tools to guide you and web pages to provide all forms, checklists, and guidance. Please visit the below website for assistance: http://www.tceq.texas.gov/field/eapp.

2. This Edwards Aquifer Application Cover Page form (certified by the applicant or agent) must be included in the application and brought to the administrative review meeting.

3. Administrative reviews are scheduled with program staff who will conduct the review. Applicants or their authorized agent should call the appropriate regional office, according to the county in which the project is located, to schedule a review. The average meeting time is one hour.

4. In the meeting, the application is examined for administrative completeness. Deficiencies will be noted by staff and emailed or faxed to the applicant and authorized agent at the end of the meeting, or shortly after. Administrative deficiencies will cause the application to be deemed incomplete and returned.

   An appointment should be made to resubmit the application. The application is re-examined to ensure all deficiencies are resolved. The application will only be deemed administratively complete when all administrative deficiencies are addressed.

5. If an application is received by mail, courier service, or otherwise submitted without a review meeting, the administrative review will be conducted within 30 days. The applicant and agent will be contacted with the results of the administrative review. If the application is found to be administratively incomplete, it can be retrieved from the regional office or returned by regular mail. If returned by mail, the regional office may require arrangements for return shipping.

6. If the geologic assessment was completed before October 1, 2004 and the site contains “possibly sensitive” features, the assessment must be updated in accordance with the *Instructions to Geologists* (TCEQ-0585 Instructions).

Technical Review

1. When an application is deemed administratively complete, the technical review period begins. The regional office will distribute copies of the application to the identified affected city, county, and groundwater conservation district whose jurisdiction includes the subject site. These entities and the public have 30 days to provide comments on the application to the regional office. All comments received are reviewed by TCEQ.

2. A site assessment is usually conducted as part of the technical review, to evaluate the geologic assessment and observe existing site conditions. The site must be accessible to our staff. The site boundaries should be

clearly marked, features identified in the geologic assessment should be flagged, roadways marked and the alignment of the Sewage Collection System and manholes should be staked at the time the application is submitted. If the site is not marked the application may be returned.

3. We evaluate the application for technical completeness and contact the applicant and agent via Notice of Deficiency (NOD) to request additional information and identify technical deficiencies. There are two deficiency response periods available to the applicant. There are 14 days to resolve deficiencies noted in the first NOD. If a second NOD is issued, there is an additional 14 days to resolve deficiencies. If the response to the second notice is not received, is incomplete or inadequate, or provides new information that is incomplete or inadequate, the application must be withdrawn or will be denied. Please note that because the technical review is underway, whether the application is withdrawn or denied **the application fee will be forfeited**.
4. The program has 90 calendar days to complete the technical review of the application. If the application is technically adequate, such that it complies with the Edwards Aquifer rules, and is protective of the Edwards Aquifer during and after construction, an approval letter will be issued. Construction or other regulated activity may not begin until an approval is issued.

Mid-Review Modifications

It is important to have final site plans prior to beginning the permitting process with TCEQ to avoid delays.

Occasionally, circumstances arise where you may have significant design and/or site plan changes after your Edwards Aquifer application has been deemed administratively complete by TCEQ. This is considered a "Mid-Review Modification". Mid-Review Modifications may require redistribution of an application that includes the proposed modifications for public comment.

If you are proposing a Mid-Review Modification, two options are available:

- If the technical review has begun your application can be denied/withdrawn, your fees will be forfeited, and the plan will have to be resubmitted.
- TCEQ can continue the technical review of the application as it was submitted, and a modification application can be submitted at a later time.

If the application is denied/withdrawn, the resubmitted application will be subject to the administrative and technical review processes and will be treated as a new application. The application will be redistributed to the affected jurisdictions.

Please contact the regional office if you have questions. If your project is located in Williamson, Travis, or Hays County, contact TCEQ's Austin Regional Office at 512-339-2929. If your project is in Comal, Bexar, Medina, Uvalde, or Kinney County, contact TCEQ's San Antonio Regional Office at 210-490-3096

Please fill out all required fields below and submit with your application.

1. Regulated Entity Name: Wyoming Springs Extension- Segment 1					**2. Regulated Entity No.:** N/A			
3. Customer Name: City of Round Rock					**4. Customer No.:** 600413181			
5. Project Type: **(Please circle/check one)**	New		Modification		Extension		Exception	
6. Plan Type: **(Please circle/check one)**	WPAP	CZP	SCS	UST AST	EXP	EXT	Technical Clarification	Optional Enhanced Measures
7. Land Use: **(Please circle/check one)**	Residential		Non-residential		**8. Site (acres):**		31.60	
9. Application Fee:	$7,150		**10. Permanent BMP(s):**		Wet Vault			
11. SCS (Linear Ft.):	0		**12. AST/UST (No. Tanks):**		N/A			
13. County:	Williamson		**14. Watershed:**		Brushy Creek			

Application Distribution

Instructions: Use the table below to determine the number of applications required. One original and one copy of the application, plus additional copies (as needed) for each affected incorporated city, county, and groundwater conservation district are required. Linear projects or large projects, which cross into multiple jurisdictions, can require additional copies. Refer to the "Texas Groundwater Conservation Districts within the EAPP Boundaries" map found at:

http://www.tceq.texas.gov/assets/public/compliance/field_ops/eapp/EAPP%20GWCD%20map.pdf

For more detailed boundaries, please contact the conservation district directly.

Austin Region			
County:	**Hays**	**Travis**	**Williamson**
Original (1 req.)	___	___	_1_
Region (1 req.)	___	___	_1_
County(ies)	___	___	_1_
Groundwater Conservation District(s)	___Edwards Aquifer Authority ___Barton Springs/ Edwards Aquifer ___Hays Trinity ___Plum Creek	___Barton Springs/ Edwards Aquifer	NA
City(ies) Jurisdiction	___Austin ___Buda ___Dripping Springs ___Kyle ___Mountain City ___San Marcos ___Wimberley ___Woodcreek	___Austin ___Bee Cave ___Pflugerville ___Rollingwood ___Round Rock ___Sunset Valley ___West Lake Hills	___Austin ___Cedar Park ___Florence ___Georgetown ___Jerrell ___Leander ___Liberty Hill ___Pflugerville X__Round Rock

San Antonio Region					
County:	**Bexar**	**Comal**	**Kinney**	**Medina**	**Uvalde**
Original (1 req.)	___	___	___	___	___
Region (1 req.)	___	___	___	___	___
County(ies)	___	___	___	___	___
Groundwater Conservation District(s)	___ Edwards Aquifer Authority ___Trinity-Glen Rose	___Edwards Aquifer Authority	___Kinney	___EAA ___Medina	___EAA ___Uvalde
City(ies) Jurisdiction	___Castle Hills ___Fair Oaks Ranch ___Helotes ___Hill Country Village ___Hollywood Park ___San Antonio (SAWS) ___Shavano Park	___Bulverde ___Fair Oaks Ranch ___Garden Ridge ___New Braunfels ___Schertz	NA	___San Antonio ETJ (SAWS)	NA

I certify that to the best of my knowledge, that the application is complete and accurate. This application is hereby submitted to TCEQ for administrative review and technical review. Jeffrey Nagy, P.E.
Print Name of Customer/Authorized Agent
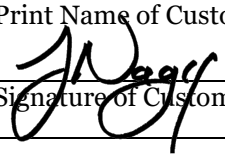 8/14/2023 Signature of Customer/Authorized Agent Date

FOR TCEQ INTERNAL USE ONLY				
Date(s)Reviewed:		Date Administratively Complete:		
Received From:		Correct Number of Copies:		
Received By:		Distribution Date:		
EAPP File Number:		Complex:		
Admin. Review(s) (No.):		No. AR Rounds:		
Delinquent Fees (Y/N):		Review Time Spent:		
Lat./Long. Verified:		SOS Customer Verification:		
Agent Authorization Complete/Notarized (Y/N):		Fee Check:	Payable to TCEQ (Y/N):	
Core Data Form Complete (Y/N):			Signed (Y/N):	
Core Data Form Incomplete Nos.:			Less than 90 days old (Y/N):	

Edwards Aquifer Protection Program Roadway Application

Texas Commission on Environmental Quality

This application is intended only for projects which a major roadway is designed for construction, such as State highways, County roads, and City thoroughfares.

Designed for Regulated Activities on the Contributing Zone to the Edwards Aquifer in relation to 30 TAC §213.24, Regulated Activities on the Edwards Aquifer Recharge Zone, in relation to 30 TAC §213.5(b), Effective June 1, 1999.

To ensure that the application is administratively complete, confirm that all fields in the form are complete, verify that all requested information is provided, consistently reference the same site and contact person in all forms in the application, and ensure forms are signed by the appropriate party.

Note: Including all the information requested in the form and attachments contributes to more streamlined technical reviews.

Signature

To the best of my knowledge, the responses to this form accurately reflect all information requested concerning the proposed regulated activities and methods to protect the Edwards Aquifer.

The application was prepared by:

Print Name of Customer/Agent: Jeffrey Nagy, P.E.

Date: 08/14/2023

Signature of Customer/Agent:

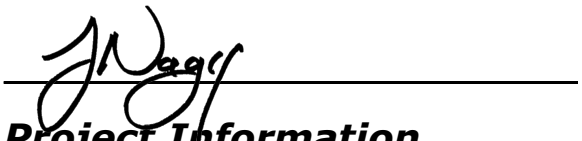

Project Information

1. Regulated Entity (Project) Name: Wyoming Springs Extension - Segment 1
2. County: Williamson
3. Stream Basin(s): Brushy Creek
4. Groundwater Conservation District (if applicable): N/A
5. Customer (Applicant):

   Contact Person: Dawn Scheel, P.E.
   Entity: City of Round Rock- Transportation
   Mailing Address: 3400 Sunrise Rd.
   City, State: Round Rock, TX Zip: 78665
   Telephone: 512-218-6603
   Email Address: dscheel@roundrocktexas.gov

6. Agent (Representative):

   Contact Person: Jeffrey Nagy, P.E.
   Entity: Halff Associates
   Mailing Address: 13620 Briarwick Drive, Building C
   City, State: Austin, TX Zip: 78729
   Telephone: 512-942-6216
   Email Address: jnagy@halff.com

7. Landowner of R.O.W. (Right of Way)
   Person or entity responsible for maintenance of water quality Best Management Practices (BMPs), if not applicant.

   Contact Person: Dawn Scheel
   Entity: City of Round Rock - Transportation
   Mailing Address: 3400 Sunrise Rd.
   City, State: Round Rock, TX Zip: 78665
   Telephone: 512-218-6603
   Email Address: dscheel@roundrocktexas.gov

8. ☒ **The TCEQ must be able to inspect the project site or the application will be returned**. Sufficient survey marking is provided on the project to allow TCEQ regional staff to locate the boundaries and alignment of any regulated activities and the geologic or manmade features noted in the Geologic Assessment.

   ☒ Survey marking will be completed by this date: 03/04/2024

9. ☒ **Attachment A - Road Map**. A road map showing directions to and the location of the project site is attached. The map clearly shows the boundary of the project site.

10. ☒ **Attachment B - USGS Quadrangle**. A copy of the official 7 ½ minute USGS Quadrangle Map (Scale: 1" = 2000') is attached. The map(s) clearly show:

    ☒ Project site boundaries
    ☒ USGS Quadrangle Name(s)
    ☒ All drainage paths from site to surface waters

11. ☒ **This project extends into (Check all that apply):**

    ☒ Recharge Zone (RZ)
    ☐ Contributing Zone (CZ)
    ☐ Transition Zone (TZ)
    ☐ Contributing Zone within Transition Zone (CZ/TZ)
    ☐ Zone not regulated by EAPP

12. ☒ **Attachment C - Project Description**. A detailed narrative description of the proposed project is attached. The project description is consistent throughout the application and contains, at a minimum, the following details:

- ☒ Complete site area [Acres]
- ☒ Offsite upgradient stormwater areas to be captured
- ☒ Impervious area [Acres]
- ☒ Permanent BMP(s)
- ☒ Proposed site use
- ☒ Existing roadway (paved and/or unpaved)
- ☒ Structures to be demolished [Include demo phase]
- ☒ Major interim phases

13. Existing project site conditions are noted below:

- ☐ Existing paved and/or unpaved roads
- ☐ Undeveloped (Cleared)
- ☒ Undeveloped (Undisturbed/Not cleared)
- ☐ Existing commercial site
- ☐ Existing industrial site
- ☐ Existing residential site
- ☐ Other: _____

14. ☒ **Attachment D - Factors Affecting Surface Water Quality**. A detailed description of all factors that could affect surface water quality is attached.

15. ☒ Only inert materials as defined by 30 TAC §330.3 will be used as fill material.

16. Type of pavement or road surface to be used:

- ☒ Concrete
- ☒ Asphaltic concrete pavement
- ☐ Permeable Friction Course (PFC)
- ☐ Other: _____

17. Right of Way (R.O.W.) and Pavement Area:

R.O.W. for project: 31.60 (ac.)
Length: 4557 ft @ Wyoming Springs Dr & 2068 ft @ Sam Bass Rd ft.
Width: varies from 120 ft. to 316 ft.
Impervious cover (IC): 9.52 (ac.)
Total of Pavement area 9.52 (ac.) ÷ R.O.W. area 31.60 (ac.) x 100 = 30.13% IC.

- ☒ CAD program was used to determine areas.
- ☒ Number of travel lanes: proposed: 4, existing: 0
- ☒ Typical widths of lanes: 12 (ft.)
- ☒ Are intersections also being improved? (Y/N) Y

Site Plan Requirements

Items 18 - 28 must be included on the Site Plan.

18. ☒ The Site Plan must have a minimum scale of 1" = 400'.
    Site Plan Scale: 1" = 40'

19. 100-year floodplain boundaries:

    ☒ Some part(s) of the project site is located within the 100-year floodplain. The floodplain is shown and labeled. The 100-year floodplain boundaries are based on the following specific (including date of material) source(s):FEMA Map #48491C0488F revised 12/20/19.

    ☐ No part of the project site is located within the 100-year floodplain.

20. ☒ A layout of the development with existing and finished contours at appropriate, but not greater than ten-foot contour intervals is shown. Sensitive features, lots, wells, buildings, roads, culverts, etc. are shown on the site plan.

21. ☒ A figure (map) indicating all paths of drainage from the site to surface waters.

    ☒ Name all stream crossings: Brushy Creek, Dry Fork Creek, & unamed ephemeral tributary to Brushy Creek

    ☒ Drainage patterns and approximate slopes.

    ☐ There will be no discharge to surface waters.

22. ☒ Distinguish between areas of soil disturbance and areas which will not be disturbed.

23. ☒ Show locations of major structural and nonstructural controls. These are the temporary and permanent best management practices. Include the following:

    ☐ Show design and location of any hazardous materials traps.

    ☒ Show design at outfalls of major control structures and conveyances.

    ☒ A description of the BMPs and measures that prevent pollutants from entering surface streams.

24. Show locations of staging areas or project specific locations (PSL). Are they:

    ☐ Onsite, within project R.O.W.

    ☒ Offsite.

    ☐ Not yet determined. (Requires future authorization)

25. ☒ Show locations where soil stabilization practices are expected to occur.

26. ☒ Show surface waters (including wetlands).

27. Temporary aboveground storage tank facilities:

    ☐ Temporary aboveground storage tank facilities will be located on this site. Show on site plan.

    ☒ Temporary aboveground storage tank facilities will not be located on this site.

28. ☒ Plan(s) also include:

    ☒ Sidewalks ☒ Shared-use paths

    ☒ Related turn lanes ☒ Off-site improvements and staging areas

☒ Demolition plans ☒ Utility relocations
☐ Other improved areas: _____

Permanent Best Management Practices (BMPs)

Description of practices and measures that will be used after construction is completed.

29. ☒ Permanent BMPs and measures have been designed, and will be constructed, operated, and maintained to ensure that 80% of the incremental increase in the annual mass loading of total suspended solids (TSS) from the site caused by the regulated activity is removed. These quantities have been calculated in accordance with technical guidance accepted by the executive director.

    ☒ The TCEQ Technical Guidance Manual (TGM) was used to design permanent BMPs and measures for this site.
    ☐ A technical guidance other than the TCEQ TGM was used to design permanent BMPs and measures for this site. The complete citation for the technical guidance that was used: _____

30. ☒ **Attachment E - BMPs for Upgradient (Offsite) Stormwater.**

    ☒ A description of the BMPs and measures that will be used to prevent pollution of surface water, groundwater, or stormwater that originates upgradient from the site and flows across the site is attached.
    ☐ No surface water, groundwater or stormwater originates upgradient from the site and flows across the site, and an explanation is attached.
    ☐ Permanent BMPs or measures are not required to prevent pollution of surface water, groundwater, or stormwater that originates upgradient from the site and flows across the site, and an explanation is attached.

31. ☒ **Attachment F - BMPs for On-site Stormwater**.

    ☒ A description of the BMPs and measures that will be used to prevent pollution of surface water or groundwater that originates on-site or flows off the site, including pollution caused by contaminated stormwater runoff from the site is attached.
    ☐ Permanent BMPs or measures are not required to prevent pollution of surface water or groundwater that originates on-site or flows off the site, including pollution caused by contaminated stormwater runoff, and an explanation is attached.

32. ☒ **Attachment G - Construction Plans**. Construction plans and design calculations for the proposed permanent BMPs and measures have been prepared by or under the direct supervision of a Texas Licensed Professional Engineer, and are signed, sealed, and dated. Construction plans for the proposed permanent BMPs and measures are attached and include all proposed structural plans and specifications, and appropriate details.

    ☒ Major bridge cross-sections, and roadway plan and profiles
    ☒ BMP plans and details ☒ Design calculations
    ☒ Erosion control ☒ TCEQ Construction Notes
    ☒ SW3P ☒ EPIC, as necessary

33. ☒ **Attachment H - Inspection, Maintenance, Repair and Retrofit Plan**. A site and BMP specific plan for the inspection, maintenance, repair, and, if necessary, retrofit of the permanent BMPs and measures is attached. The plan fulfills all the following:

    ☒ Prepared and certified by the engineer designing the permanent BMPs and measures.
    ☒ Signed by the owner or responsible party.
    ☒ Outlines specific procedures for documenting inspections, maintenance, repairs, and, if necessary, retrofit.
    ☒ Contains a discussion of recordkeeping procedures.

34. ☐ **Attachment I - Pilot-Scale Field Testing Plan.** Pilot studies for BMPs that are not recognized by the Executive Director require prior approval from the TCEQ. A plan for pilot-scale field testing is attached.

    ☒ N/A

35. ☒ **Attachment J - Measures for Minimizing Surface Stream Contamination.** A description of the measures that will be used to avoid or minimize surface stream contamination and changes in the way in which water enters a stream as a result of the construction and development is attached. The measures address increased stream flashing, the creation of stronger flows, and in-stream effects caused by the regulated activity which increase erosion or may result in water quality degradation.

    ☐ Include permanent spill measures used to contain hydrocarbons or hazardous substances by way of traps, or response contingencies.

36. The applicant is responsible for maintaining the permanent BMPs after construction until such time as the maintenance obligation is either assumed in writing by another entity.

    If the applicant intends to transfer responsibility, check the box below.

    ☐ Yes

    A copy of the transfer of responsibility must be filed with the executive director at the appropriate regional office within 30 days.

Stormwater to be generated by the Proposed Project

Description of practices and measures that will be used during construction.

37. ☒ The site description, controls, maintenance, and inspection requirements for the Storm Water Pollution Prevention Plan (SWPPP or SW3P) developed under the Texas Pollutant Discharge Elimination System (TPDES) general permits for stormwater discharges have been submitted to fulfill paragraphs 30 TAC §213.24(1-5) & §213.5(b) of the technical report.

    ☒ The Temporary Stormwater Section (TCEQ-0602) is included with the application.
    ☐ The SWPPP (SW3P) will serve as the Temporary Stormwater Section (TCEQ-0602).

38. ☒ **Attachment K - Volume and Character of Stormwater**. A detailed description of the volume (quantity) and character (quality) of the stormwater runoff expected to occur from the proposed project is attached. The estimates of stormwater runoff quality and quantity are based on area and type of impervious cover.

    ☒ Include the pre-construction runoff coefficient.
    ☒ Include the post-construction runoff coefficient.

Administrative Information

39. ☒ Submit one (1) original and one (1) copy of the application, plus one electronic copy as needed, for each affected incorporated city, groundwater conservation district, and county in which the project will be located. The TCEQ is required to distribute the additional copies to these jurisdictions.

40. The fee for the plan(s) is based on:

    ☒ The total R.O.W. (as in Item 17).

    ☐ TxDOT roadway project.



Directions:
From IH-35, turn east on Sam Bass Rd and travel 1.8 miles. Turn left onto Creek Bend Blvd, and travel fron 0.7 miles to Wyoming Springs Blvd. The project site is the undeveloped Wyoming Springs Blvd to the right at the signaled intersection.

halff
13620 BRIARWICK DRIVE
BLDG C, STE 100
AUSTIN, TX 78729
(512) 777-4600

ROUND ROCK TEXAS

ATTACHMENT 1A: ROAD MAP
WYOMING SPRINGS
SEGMENT 1

Project No.: 36179.002
Issued:

0 500 1000 1500 2000
SCALE: 1"=1000'

Wyoming Springs Extension - Segment 1

Williamson County, Texas

WPAP - Attachment 1B
USGS / Edwards Recharge Zone Map

PROJECT SITE LOCATION

Edwards Aquifer Contributing Zone

Edwards Aquifer Recharge Zone

Edwards Aquifer Transition Zone

Legend

Project Location

Edwards Aquifer Zones

- **Edwards Aquifer Contributing Zone**
- **Edwards Aquifer Contributing Zone within the Transition Zone**
- **Edwards Aquifer Recharge Zone**
- **Edwards Aquifer Transition Zone**

- Edwards Aquifer Regulatory Boundary from TCEQ, 2005
- 7.5 Minute USGS Topographic Quads PFLUGERVILLE EAST and ROUND ROCK County Mosaic from TNRIS

Note: The Project Area is entirely in the Edwards Aquifer Recharge Zone

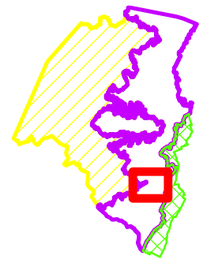

N
W E
S

0 1,000 2,000 3,000 Feet

1:24,000

halff

AVO 36179.002

June 19, 2023

Esri, HERE, Garmin, (c) OpenStreetMap contributors, and the GIS user community

Attachment 1C:

Project Description

Location

The 31.60-acre site is located just north of Creek Bend Blvd/Brightwater Blvd and south of Sam Bass Rd. The project limits lie between the existing segments of Wyoming Springs Drive, as well as along Sam Bass Rd from Tonkawa Trail to Cross creek Trail. It will provide connectivity across Brushy Creek and Dry Fork Creek. As shown in Attachment 1B, it is located entirely within the Edwards Aquifer Recharge Zone.

Existing Conditions

An open, grassy meadow currently covers the project site. It is undeveloped and largely undisturbed, wildflowers and tall grasses throughout most of the site. The southern half of the site drains and outfalls into Brushy Creek. The site crosses the existing Hairy Man Road just south of Brushy Creek. The northern half of proposed Wyoming Springs drains and outfalls into Dry Fork Creek. There are no existing structures along the project site. A portion of the project site runs along Sam Bass Road an existing roadway with several driveways and drainage ditched on either side. This segment of Sam Bass is a 4-lane undivided Arterial Road and is superelevated through a part of the project limits.

Two geologic features were identified in the Geological Assessment performed for the site. The first of the non-karst features identified was found to be a closed depression, and the second was found to be an opening with no bedrock present. The overall potential for rapid infiltration of runoff into the subsurface within the site has been deemed to be low due to the non-karst origins of the features identified on site.

Proposed Conditions

The proposed Wyoming Springs Drive development includes approximately 0.75 mile of four-lane divided Arterial roadway with 6-foot-wide sidewalk along the east side and an 8 to 12-foot-wide shared use path (SUP) along the west side of the roadway. Two twin bridge crossings are proposed clearing Hairy Man Rd./Brushy Creek and Dry Fork Creek. The proposed SUP will provide accessible connectivity to the existing Brushy Creek Regional Trail along the Hairy Man Rd.

With the development of undisturbed green space, the proposed improvements along Wyoming Springs Drive will create increase in storm runoff. Storm runoff for the roadway and proposed ancillary improvements will be captured by storm drain and outfall into Brushy Creek and Dry Fork Creek respectively. There are no major interim phases proposed through construction.

Proposed improvements along Sam Bass Rd includes 0.43 mile of additional lane and pavement restriping. Improvements will create additional runoff due to added impervious cover. Therefore, existing drainage culverts will be extended and upgraded.

Site impervious cover will consist of the roadway and accompanying sidewalk, shared use path, and bridge totaling 9.52 acres of asphalt and concrete. The added impervious cover along Sam Bass Rd. will be compensated for with the overtreatment of water quality facilities along Wyoming Springs Drive.

Best Management Practices

To comply with TCEQ Edwards Aquifer Regulations rock berms, silt fences, tree protection fencing, construction exits, cofferdams, and dewatering operations will be used as Temporary Best Management Practices (BMP). Once brought to final grade, the disturbed areas will be revegetated or secured with rock riprap.

To treat the proposed impervious cover for the site, twelve (12) StormTrooper units will be used as the permanent BMP for the site. TSS removal calculations were performed in accordance with Technical Guidance Manual RG-348 and was sized for 84.5% removal efficiency as shown in the provided plans. All offsite upgradient stormwater areas will be captured in drainage ditches prior to entering proposed improvements and will be routed directing to the nearest downstream surface stream

Attachment D:
Factors Affecting Water Quality

Factors that could affect surface water and groundwater quality include:

- Erosion and sedimentation – During construction, removal of vegetation will leave the ground surface exposed, increasing the chance for erosion during rainfall events.

- Impervious Cover – The proposed project will increase impervious cover through addition of road, bridges, sidewalks, and shared use paths. This increase in impervious cover will increase the TSS concentration of the runoff.

TCEQ certified temporary and permanent BMPs will be installed to mitigate for the pollutants caused by these factors.

Attachment E:
BMPs for Upgradient Stormwater

There are five proposed box culverts where a dry creek crosses proposed Wyoming Springs Dr north of Tenor Ln. Upgradient off-site flow through this ephemeral stream is proposed to bypass roadway through proposed box culverts under Basin B. Upgradient off-site flow to the west of proposed Brushy Creek and Dry Fork Creek bridge crossings will continue undisturbed under crossings. Basin BCRT routes all upgradient storm water flow through a drainage ditch and through storm pipe under Hairy Man Rd directly into Brushy Creek. Basin OSD1 upgradient flows will be captured in a drainage ditch and routed directly to Dry Fork Creek. This storm runoff will be routed directly downstream, bypassing any proposed impervious cover to avoid mixing of stormwaters.

Attachment G:
Construction Plans

WYOMING SPRINGS EXTENSION
SEGMENT 1

EXTENSION OF WYOMING SPRINGS DR FROM
CREEKBEND BLVD TO SAM BASS RD

ROUND ROCK, WILLIAMSON COUNTY, TEXAS

FOR CONSTRUCTION OF ROADWAY EXTENSION WHICH INCLUDES EARTHWORK, GRADING, FLEX BASE, HMAC, PAVING, BRIDGE, DRAINAGE STRUCTURES, WATER QUALITY FACILITIES, WATER AND WASTEWATER ADJUSTMENTS, SIGNALIZATION, LIGHTING, SHARED USE PATH, SIGNING AND PAVEMENT MARKINGS

TOTAL LENGTH OF PROJECT:	6966.79 ft (1.32 MI)
ROADWAY LENGTH:	3950.74 ft (0.75 MI)
SAM BASS IMPROVEMENTS:	2296.05 ft (0.43 MI)
BRUSHY CREEK BRIDGE LENGTH:	480.00 ft (0.09 MI)
DRY FORK BRIDGE LENGTH:	240.00 ft (0.05 MI)
ROADWAY CLASSIFICATION:	ARTERIAL
DESIGN SPEED:	45 mph
MINIMUM HORIZONTAL CURVE	1,000 ft
OPENING ADT:	7,600
20-YR ADT:	15,100
MIN/MAX RIGHT-OF-WAY	103'/146'
TRUCK PERCENT	4.0%
DIRECTIONAL DISTRIBUTION	50%/50%

halff

13620 BRIARWICK DRIVE
SUITE 100
AUSTIN, TX 78729
TEL (512)777-4600
FAX (512) 252-8141
TBPELS ENGINEERING FIRM #312

PLANS PREPARED BY:

JEFFREY NAGY, P.E.
JNAGY@HALFF.COM

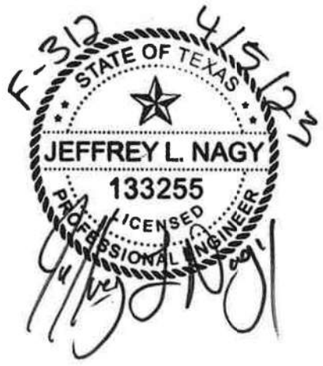

APRIL 5, 2023

100% SUBMITTAL

I, JEFFREY NAGY P.E., DO HEREBY CERTIFY THAT THE PUBLIC WORKS AND DRAINAGE IMPROVEMENTS DESCRIBED HEREIN HAVE BEEN DESIGNED IN COMPLIANCE WITH THE SUBDIVISION AND BUIDING REGULATION ORDINANCES AND STORM WATER DRAINAGE POLICY ADOPTED BY THE CITY OF ROUND ROCK, TEXAS.

(SEAL AND SIGNATURE OF ENGINEER) DATE 04/05/2023

ALL RESPONSIBILITY FOR THE ADEQUACY OF THESE PLANS REMAINS WITH THE ENGINEER WHO PREPARED THEM. IN ACCEPTING THESE PLANS, THE CITY OF ROUND ROCK MUST RELY ON THE ADEQUACY OF THE WORK HEREIN SEALED BY THE DESIGN ENGINEER.

SPECIFICATIONS ADOPTED BY THE TEXAS DEPARTMENT OF TRANSPORTATION, ON NOVEMBER 1, 2014, SPECIFICATIONS APOPTED BY THE CITY OF ROUND ROCK ON JANUARY 28, 2021 SHALL GOVERN ON THIS PROJECT.

WATERSHED: BRUSHY CREEK

FEMA FIRM MAP # 48491C0488F
REVISED DECEMBER 20,2019

REGISTERED ACCESSIBILITY SPECIALIST (RAS) INSPECTION REQUIRED
TDLR NO. EABRPJ_____

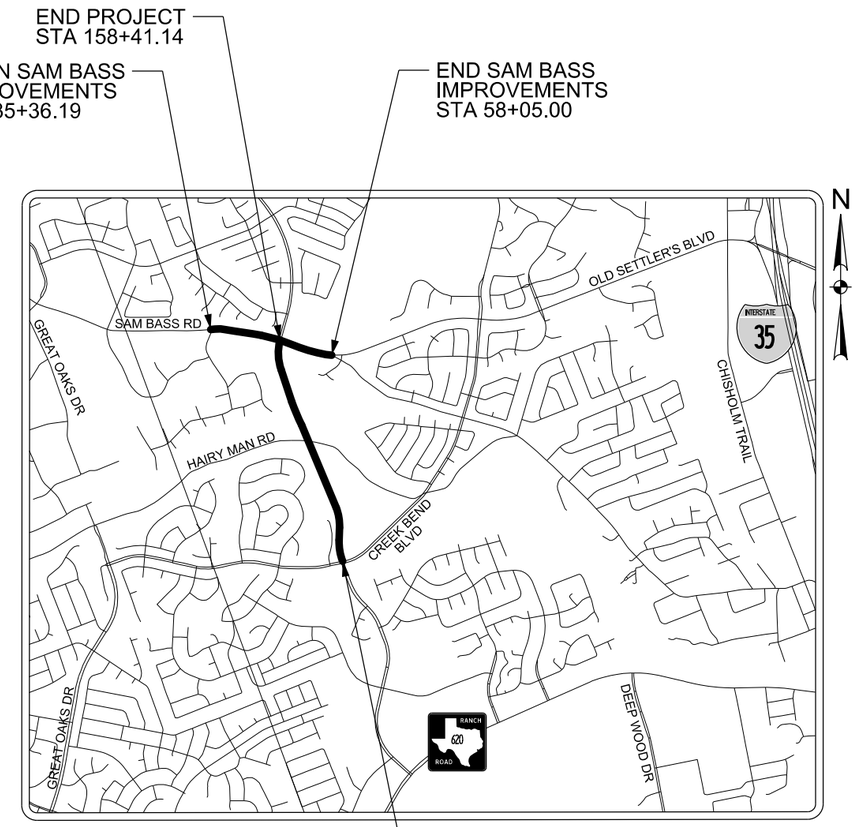

LOCATION MAP
N.T.S.

ROUND ROCK
TEXAS

ACCEPTED BY:_____

GARY HUDDER, DIRECTOR - CITY OF ROUND ROCK, TEXAS TRANSPORTAION DEPARTMENT DATE

CITY OFFICIALS

CRAIG MORGAN	MAYOR
MICHELLE LY	COUNCIL MEMBER
RENE FLORES	COUNCIL MEMBER
MATTHEW BAKER	COUNCIL MEMBER
FRANK ORTEGA	COUNCIL MEMBER
KRISTIN STEVENS	COUNCIL MEMBER
HILDA MONTGOMERY	COUNCIL MEMBER
GARY HUDDER	TRANSPORTATION DIRECTOR

SHEET NO	GENERAL
1	TITLE SHEET
2	SUPPLEMENTAL INDEX OF SHEETS
3 - 4	GENERAL NOTES AND SPECIFICATIONS
5 - 7	ESTIMATE & QUANTITY SHEETS
8	SIGNAL SUMMARY OF QUANTITIES
9	SUMMARY OF SMALL SIGNS
10 - 13	TYPICAL SECTIONS
	TRAFFIC CONTROL SHEETS
14	TRAFFIC CONTROL CONSTRUCTION SEQUENCE
15	HAIRY MAN RD DETOUR PLAN
16	ADVANCE WARNING SIGN LAYOUT
17 - 18	TRAFFIC CONTROL PLAN
19	**TCP (1-4)-18
20	**TCP (2-4)-18
21	**TCP (1-5)-18
22	**TCP (2-5)-18
23	**TCP (3-1)-13
24	**TCP (3-3)-14
25 - 36	**BC (1) - (12) -21
37 - 38	**WZ (BTS-1-2)-13
39	**WZ (STPM)-13
40	**WZ (RCD)-13
41	**WZ(BRK)-13
	ROADWAY SHEETS
42 - 53	REMOVAL PLAN
54 - 56	TREE LIST
57 - 75	TREE REMOVAL AND PROTECTION PLAN
76	SURVEY CONTROL PLAN
77 - 84	HORIZONTAL ALIGNMENT & CROSS SLOPE DATA
85 - 105	ROADWAY PLAN & PROFILE SHEETS
106 - 107	DRIVEWAY PLAN & PROFILE SHEETS
108	DRIVEWAY DETAIL
109	*ST-01.1 SIDEWALK DETAIL (CORR)
109	*ST-01.2 SHARED USE PATH DETAIL (CORR)
109	*ST-01.3 SIDEWALK & SHARED USE PATH DETAIL (CORR)
109	*BRIDGING TREE ROOTS DETAIL
110	*CORRIDOR FENCE DETAIL
111	*BED-14
112	*GF (31) -19
113	*GF (31) MS-19
114 - 117	*PED-18
118	*MCPSWMD-19
119 - 121	*PRD-13
122	*SGT (12S)31-18
123	**TE (HMAC)-11
124	**TREATMENT FOR VARIOUS EDGE CONDITIONS
	RETAINING WALL SHEETS
125	MSE WALL QUANTITIES AT BRUSHY CREEK
126 - 132	BRUSHY CREEK MSE WALL LAYOUTS 1-7
133 - 134	MSE WALL TYPICAL SECTIONS AT BRUSHY CREEK
135	MSE WALL QUANTITIES AT DRY FORK CREEK
136 - 141	DRY FORK CREEK MSE WALL LAYOUTS 8-13
142	MSE WALL TYPICAL SECTIONS AT DRY FORK CREEK
143 - 145	MSE WALL BORING LOGS
146 - 147	++RW (MSE)(MOD)
148	++RW (EM)
149	++RW (MSE)DD
150	++RW (TRF)
	DRAINAGE SHEETS
151 - 153	OVERALL DRAINAGE AREA MAP
154 - 162	DRAINAGE AREA MAPS
163 - 166	CULVERT PLAN & PROFILES
167 - 179	WYM SPRG STORM DRAIN PLAN & PROFILES
180 - 182	WYM SPRG DRAINAGE DITCH PLAN & PROFILES
183 - 185	SAM BASS STORM AND DITCH PLAN
186 - 189	SAM BASS STORM AND DITCH PROFILES
190 - 197	WYM SPRG DRAINAGE CALCULATIONS
198 - 201	SAM BASS DRAINAGE CALCULATIONS
202	TCEQ REMOVAL CALCULATIONS
203	*D-01 STORM SEWER LINE BEDDING DETAIL (EXISTING PAVED SURFACE) (CORR)
203	*D-02 STORM SEWER LINE BEDDING DETAIL (NON-PAVED SURFACE) (CORR)
203	*DR-05 BOLTED STORMSEWER MANHOLE COVER AND FRAME DETAIL (CORR)
203	*DR-06 NON-BOLTED STORMSEWER MANHOLE COVER AND FRAME DETAIL (CORR)
203	*DR-07 STORM SEWER INLET COVER AND FRAME DETAIL (CORR)
204	*FW-S
205	*PRM
206 - 207	*MC-8-16
208	*MC-MD
209 - 210	*PCO
211	*CGT-PCO
212	*CH-FW-0
213	**PB
214	**PDD
215 - 216	**PSL
217	**SET P-PD
218 - 219	**SET P-CD

SHEET NO	DRAINAGE SHEETS (CONT.)
220	**PSET-SC
221	**PSET-SP
222	*PAZD
223	*PSET-RC
224 - 225	*SRR
226 - 237	*SWAQ-40-BYPASS & SWAQ-110 BYPASS
	BRIDGE SHEETS
238 - 239	NB BRUSHY CREEK BRIDGE LAYOUT
240	NB BRUSHY CREEK QUANTITIES & BEARING SEAT ELEVATIONS
241 - 242	NB BRUSHY CREEK ABUTMENT 1 AND 5 LAYOUTS
243	NB BRUSHY CREEK ABUTMENT DETAILS
244	NB BRUSHY CREEK BENTS 2-4
245	NB BRUSHY CREEK BENT DETAILS
246 - 247	NB BRUSHY CREEK FRAMING PLAN
248 - 251	NB BRUSHY CREEK 240.00' PGCU 1-2
252 - 255	NB BRUSHY CREEK AESTHETIC DETAILS
256 - 260	NB BRUSHY CREEK BORING LOGS
261	# IGND
262 - 263	SB BRUSHY CREEK BRIDGE LAYOUT
264	SB BRUSHY CREEK QUANTITIES & BEARING SEAT ELEVATIONS
265 - 266	SB BRUSHY CREEK ABUTMENT 1 AND 5 LAYOUTS
267	SB BRUSHY CREEK ABUTMENT DETAILS
268	SB BRUSHY CREEK BENTS 2-4
269	SB BRUSHY CREEK BENT DETAILS
270 - 271	SB BRUSHY CREEK FRAMING PLAN
272 - 275	SB BRUSHY CREEK 240.00' PGCU 1-2
276 - 279	SB BRUSHY CREEK AESTHETIC DETAILS
280 - 284	SB BRUSHY CREEK BORING LOGS
285	# IGND
286	NB DRY FORK CREEK BRIDGE LAYOUT
287	NB DRY FORK CREEK QUANTITIES & BEARING SEAT ELEVATIONS
288 - 289	NB DRY FORK CREEK ABUTMENT 1 AND 4 LAYOUTS
290	NB DRY FORK CREEK ABUTMENT DETAILS
291 - 292	NB DRY FORK CREEK BENTS 2-3
293	NB DRY FORK CREEK BENT DETAILS
294	NB DRY FORK CREEK FRAMING PLAN
295 - 296	NB DRY FORK CREEK 240.00' PGCU
297	NB DRY FORK CREEK AESTHETIC DETAILS
298 - 300	NB DRY FORK CREEK BORING LOGS
301	# IGND
302	SB DRY FORK CREEK BRIDGE LAYOUT
303	SB DRY FORK CREEK QUANTITIES & BEARING SEAT ELEVATIONS
304 - 305	SB DRY FORK CREEK ABUTMENT 1 AND 4 LAYOUTS
306	SB DRY FORK CREEK ABUTMENT DETAILS
307 - 308	SB DRY FORK CREEK BENTS 2-3
309	SB DRY FORK CREEK BENT DETAILS
310	SB DRY FORK CREEK FRAMING PLAN
311 - 312	SB DRY FORK CREEK 240.00' PGCU
313	SB DRY FORK CREEK AESTHETIC DETAILS
314 - 316	SB DRY FORK CREEK BORING LOGS
317	# IGND
318	# BAS-A(MOD)
319 - 321	# BMCS (MOD)
322 - 323	# FD (MOD)
324 - 326	# IGEB (MOD)
327 - 328	# BL
329 - 330	# BRSM
331	# BS-EJCP
332 - 334	# TYPE C411
335	# CRR
336 - 337	# CSAB
338	# IGCS
339 - 340	# IGD
341 - 342	# IGMS
343	# IGSK
344	# IGTS
345 - 346	# MEBR(C)
347 - 350	# PCP
351	# PCP-FAB
352 - 353	#PR11
354	#PSN
355	# SEJ-M
	TRAFFIC SHEETS
356 - 365	SIGNING & PAVEMENT MARKING LAYOUTS
366	EXISTING SIGNAL LAYOUT AT CREEK BEND BLVD
367	PROPOSED SIGNAL LAYOUT AT CREEK BEND BLVD
368	PROPOSED SIGNAL ELEVATIONS AT CREEK BEND BLVD
369	PROPOSED SIGNAL ELECTRICAL SCHEDULE AT CREEK BEND BLVD
370	EXISTING SIGNAL LAYOUT AT SAM BASS RD
371	PROPOSED SIGNAL LAYOUT AT SAM BASS RD
372	PROPOSED SIGNAL ELEVATIONS AT SAM BASS RD
373	PROPOSED SIGNAL ELECTRICAL SCHEDULE AT SAM BASS RD
374	PROPOSED SIGN DETAIL
375 - 377	*PM (1) - (3) -20
378	**SMD (GEN)-08
379 - 381	**SMD (SLIP-1-3)-08
382	## WV & IZ-14
383 - 394	## ED (1) - (12) -14

SHEET NO	TRAFFIC SHEETS (CONT.)
395	## SNS-95
396 - 397	## SMA-80 (1) - (2) -12
398	## MA-C-12
399	## MA-C(ILSN)-12
400	## MA-D-12
401	## TS-FD-12
402	## LUM-A-12
403	## TS-CF-21
404	## MA-DPD-20
405	## TS-BP-20
	ILLUMINATION SHEETS
406	ILLUMINATION GENERAL NOTES
407 - 412	ILLUMINATION PLAN
413	BRUSHY CREEK UNDERPASS ILLUMINATION PLAN
414 - 416	ILLUMINATION PLAN & PROFILE SHEETS
417 - 419	ELECTRICAL SCHEDULES
420 - 426	ED (1) - (6), (9) -14
427 - 429	***RID(1) - (3) -20
430 - 433	***RIP(1) - (4) -17
434 - 435	***BL(1-2) BRIDGE LIGHTING DETAILS
436 - 445	***ITS(27-30,33,35-38)-16
	WATER & WASTEWATER
446 - 447	PROPOSED WATERLINE PLAN & PROFILES
448	+WT-05 FIRE HYDRANT ASSEMBLY DETAIL (CORR)
448	+WT-06 VALVE BOX ASSEMBLY DETAIL (CORR)
448	+WT-08 WATERLINE BEDDING & SURFACE REPAIR DETAIL (NON-PAVED & PROP PAVED SURFACE) (CORR)
448	+WT-11 VERTICAL VALVE INSTALLATION DETAIL (CORR)
448	+WT-16 PIPE ENCASEMENT DETAIL (CORR)
449	+WT-22 GATE VALVE DETAIL (CORR)
449	+WT-25 THRUST BLOCK DETAIL (CORR)
449	+WT-27 WATER VALVE SIGN DETAIL (CORR)
450 - 454	+WW-19 MANHOLE MARKER SIGNAGE DETAIL
455	+MANHOLE ADJUSTMENT PLAN & PROFILES
455	+WW-01 PRECAST CONCRETE WASTEWATER MANHOLE DETAIL (CORR)
455	+WW-08 NON-BOLTED WASTEWATER MANHOLE COVER AND FRAME DETAIL (CORR)
455	+WW-09 PRECAST 48" CONCENTRIC CONCRETE CONE SECTION DETAIL (CORR)
455	+WW-07 BOLTED WASTEWATER MANHOLE COVER AND FRAME DETAIL (CORR)
455	+ 506S-2 MAJOR MANHOLE ADJUSTMENT (COA)
	+S506-A4 MINOR MANHOLE HEIGHT ADJUSTMENT (COA)
	SUBSURFACE UTILITY SHEETS
456 - 466	EXISTING UTILITY LAYOUT
	LANDSCAPE & IRRIGATION SHEETS
467	PROJECT LAYOUT
468 - 473	LANDSCAPE PLAN
474	ENLARGED LANDSCAPE AREA
475	LANDSCAPE NOTES AND SCHEDULES
476	LANDSCAPE DETAILS
477 - 482	IRRIGATION PLAN
483	IRRIGATION NOTES
484 - 485	IRRIGATION DETAILS
486	IRRIGATION DATA AND SCHEDULES

SHEET NO	EROSION CONTROL SHEETS
487	ENVIRONMENTAL PERMITS, ISSUES AND COMMITMENTS (EPIC)
488	SW3P
489	TCEQ REQUIREMENTS FOR RECHARGE ZONE OF THE EDWARDS AQUIFER
490 - 491	OVERALL EROSION CONTROL PLAN
492 - 501	EROSION CONTROL PLAN
502	DRY FORK CREEK ACCESS PLAN
503	*EC-01 TREE PROTECTION NOTES (CORR)
503	*EC-02 TREE PROTECTION TREE WELLS (CORR)
503	*EC-03 TREE PROTECTION FENCE LOCATIONS (CORR)
503	*EC-04 TREE PROTECTION FENCE CHAIN LINK (CORR)
503	*EC-10 SILT FENCE DETAILS (CORR)
503	*EC-12 ROCK BERM DETAIL (CORR)
504	*EC-09 STABILIZED CONSTRUCTION ENTRANCE DETAIL (CORR)
504	*EC-14 CURB INLET PROTECTION DETAIL (CORR)
504	*CONCRETE WASHOUT DETAIL
504	*CONSTRUCTION PERIMETER FENCE DETAIL
	CROSS SECTION SHEETS
505 - 594	CROSS SECTIONS

PHILLIP ROBERT APPLEBAUM
68404
PROFESSIONAL ENGINEER
STATE OF TEXAS

04-13-2023

The seal appearing on this document was authorized by PHILLIP R. APPLEBAUM, PE# 68404 on 04-13-2023. Alteration of a sealed document without proper notification to the responsible engineer is an offense under the Texas Engineering Practice Act. The record copy of this drawing is on file at the offices of Halff Associates, Texas 75081. TBPELS Engineering FIRM #F-312

***THE STANDARD SHEETS SPECIFICALLY IDENTIFIED ABOVE HAVE BEEN SELECTED BY ME OR UNDER MY RESPONSIBLE SUPERVISION AS BEING APPLICABLE TO THIS PROJECT.

F-312
JEFFREY L. NAGY
133255
LICENSED
PROFESSIONAL ENGINEER
STATE OF TEXAS
4/13/23

*THE STANDARD SHEETS SPECIFICALLY IDENTIFIED ABOVE HAVE BEEN SELECTED BY ME OR UNDER MY RESPONSIBLE SUPERVISION AS BEING APPLICABLE TO THIS PROJECT.

MELANIE S. CLEAVELIN
108945
LICENSED
PROFESSIONAL ENGINEER
STATE OF TEXAS
4/13/23

**THE STANDARD SHEETS SPECIFICALLY IDENTIFIED ABOVE HAVE BEEN SELECTED BY ME OR UNDER MY RESPONSIBLE SUPERVISION AS BEING APPLICABLE TO THIS PROJECT.

NOAH S. SHAFFER
107722
LICENSED
PROFESSIONAL ENGINEER
STATE OF TEXAS
4/13/23

+THE STANDARD SHEETS SPECIFICALLY IDENTIFIED ABOVE HAVE BEEN SELECTED BY ME OR UNDER MY RESPONSIBLE SUPERVISION AS BEING APPLICABLE TO THIS PROJECT.

MACK DAVIS
119955
LICENSED
PROFESSIONAL ENGINEER
STATE OF TEXAS
AGUIRRE & FIELDS, LP
TBPELS FIRM
REGISTRATION #739
4/13/2023

++THE STANDARD SHEETS SPECIFICALLY IDENTIFIED ABOVE HAVE BEEN SELECTED BY ME OR UNDER MY RESPONSIBLE SUPERVISION AS BEING APPLICABLE TO THIS PROJECT.

RYAN J. WILLIAMS
110418
LICENSED
PROFESSIONAL ENGINEER
STATE OF TEXAS
AGUIRRE & FIELDS, LP
TBPELS FIRM
REGISTRATION #739
4/13/2023

#THE STANDARD SHEETS SPECIFICALLY IDENTIFIED ABOVE HAVE BEEN SELECTED BY ME OR UNDER MY RESPONSIBLE SUPERVISION AS BEING APPLICABLE TO THIS PROJECT.

SHAUN E. SPINEY
114567
LICENSED
PROFESSIONAL ENGINEER
STATE OF TEXAS
4/13/2023

BGE, Inc. TBPE FIRM No. 1046

##THE STANDARD SHEETS SPECIFICALLY IDENTIFIED ABOVE HAVE BEEN SELECTED BY ME OR UNDER MY RESPONSIBLE SUPERVISION AS BEING APPLICABLE TO THIS PROJECT.

WYOMING SPRINGS
SEGMENT 1
ROUND ROCK, TX

ROUND ROCK
TEXAS

halff
13620 BRANTWICK DR
BLDG C, STE 100
AUSTIN, TX 78729
(512) 777-4600
TBPELS FIRM #312

No.	Revision	Date	Description

100% SUBMITTAL

Project No.:	36179.002
Issued:	5/3/2023
Drawn By:	SG
Checked By:	JN
Scale:	N.T.S

Sheet Title
SUPPLEMENTAL INDEX OF SHEETS

2
Sheet Number

USER:
DGN:
DATE:
XREF:
PLOT:

GENERAL NOTES:

1. ALL CONSTRUCTION SHALL BE IN ACCORDANCE WITH THE CURRENT TEXAS DEPARTMENT OF TRANSPORATION AND CITY OF ROUND ROCK STANDARD SPECIFICATIONS FOR CONSTRUCTION AND MAINTENANCE OF HIGHWAYS, STREETS, AND BRIDGES AND THE CITY OF ROUND ROCK STANDARD SPECIFICATIONS UNLESS SPECIFICALLY NOTED OTHERWISE.
2. ANY EXISTING UTILITIES, PAVEMENT, CURBS, SIDEWALKS, STRUCTURES, TREES, ETC., NOT PLANNED FOR DESTRUCTION OR REMOVAL THAT ARE DAMAGED OR REMOVED SHALL BE REPAIRED OR REPLACED AT CONTRACTOR'S EXPENSE.
3. THE CONTRACTOR SHALL VERIFY ALL DEPTHS AND LOCATIONS OF EXISTING UTILITIES PRIOR TO ANY CONSTRUCTION. ANY DISCREPANCIES WITH THE CONSTRUCTION PLANS FOUND IN THE FIELD SHALL BE BROUGHT IMMEDIATELY TO THE ATTENTION OF THE ENGINEER WHO SHALL BE RESPONSIBLE FOR REVISING THE PLANS AS APPROPRIATE.
4. MANHOLE FRAMES, COVERS, VALVES, CLEANOUTS, ETC. SHALL BE RAISED TO FINISHED GRADE PRIOR TO FINAL PAVING CONSTRUCTION.
5. THE CONTRACTOR SHALL GIVE THE CITY OF ROUND ROCK 48 HOURS NOTICE BEFORE BEGINNING EACH PHASE OF CONSTRUCTION. TELEPHONE 512-218-7044 (TRANSPORTATION DEPARTMENT).
6. ALL AREAS DISTURBED OR EXPOSED DURING CONSTRUCTION SHALL BE REVEGETATED IN ACCORDANCE WITH THE PLANS AND SPECIFICATIONS. REVEGETATION OF ALL DISTURBED OR EXPOSED AREAS SHALL CONSIST OF SODDING OR SEEDING, AT THE CONTRACTOR'S OPTION. HOWEVER, THE TYPE OF REVEGETATION MUST EQUAL OR EXCEED THE TYPE OF VEGETATION PRESENT BEFORE CONSTRUCTION.
7. PRIOR TO ANY CONSTRUCTION, THE ENGINEER SHALL CONVENE A PRECONSTRUCTION CONFERENCE BETWEEN THE CITY OF ROUND ROCK, HIMSELF, THE CONTRACTOR, OTHER UTILITY COMPANIES, ANY AFFECTED PARTIES AND ANY OTHER ENTITY THE CITY OR ENGINEER MAY REQUIRE.
8. THE CONTRACTOR AND THE ENGINEER SHALL KEEP ACCURATE RECORDS OF ALL CONSTRUCTION THAT DEVIATES FROM THE PLANS. THE ENGINEER SHALL FURNISH THE CITY OF ROUND ROCK ACCURATE "AS-BUILT" DRAWINGS FOLLOWING COMPLETION OF ALL CONSTRUCTION. THESE "AS-BUILT" DRAWINGS SHALL MEET WITH THE SATISFACTION OF THE ENGINEERING AND DEVELOPMENT SERVICES DEPARTMENT PRIOR TO FINAL ACCEPTANCE.
9. THE ROUND ROCK CITY COUNCIL SHALL NOT BE PETITIONED FOR ACCEPTANCE UNTIL ALL NECESSARY EASEMENT DOCUMENTS HAVE BEEN SIGNED AND RECORDED.
10. WHEN CONSTRUCTION IS BEING CARRIED OUT WITHIN EASEMENTS, THE CONTRACTOR SHALL CONFINE HIS WORK TO WITHIN THE PERMANENT AND ANY TEMPORARY EASEMENTS. PRIOR TO FINAL ACCEPTANCE, THE CONTRACTOR SHALL BE RESPONSIBLE FOR REMOVING ALL TRASH AND DEBRIS WITHIN THE PERMANENT AND TEMPORARY EASEMENTS. CLEAN-UP SHALL BE TO THE SATISFACTION OF THE CITY ENGINEER.
11. PRIOR TO ANY CONSTRUCTION, THE CONTRACTOR SHALL APPLY FOR AND SECURE ALL PROPER PERMITS FROM THE APPROPRIATE AUTHORITIES.
12. AVAILABLE BENCHMARKS (CITY OF ROUND ROCK DATUM) THAT MAY BE UTILIZED FOR THE CONSTRUCTION OF THIS PROJECT ARE DESCRIBED AS FOLLOWS:

ROUND ROCK 01-030		
	RECORD	OBSERVED IN FIELD
NORTHING	10167462.90	10168683.08
EASTING	3122191.91	3122566.64
ELEVATION	784.78	785.14
DESCRIPTION	BRASS DISK SET IN CONCRETE	BRASS DISK SET IN CONCRETE

SEE SURVEY CONTROL SHEET FOR ADDITIONAL BENCHMARK INFORMATION

EROSION AND SEDIMENTATION CONTROL NOTES:

1. EROSION CONTROL MEASURES, SITE WORK AND RESTORATION WORK SHALL BE IN ACCORDANCE WITH THE CITY OF ROUND ROCK EROSION AND SEDIMENTATION CONTROL ORDINANCE.
2. ALL SLOPES SHALL BE SODDED OR SEEDED WITH APPROVED GRASS, GRASS MIXTURES OR GROUND COVER SUITABLE TO THE AREA AND SEASON IN WHICH THEY ARE APPLIED.
3. SILT FENCES, ROCK BERMS, SEDIMENTATION BASINS AND SIMILARLY RECOGNIZED TECHNIQUES AND MATERIALS SHALL BE EMPLOYED DURING CONSTRUCTION TO PREVENT POINT SOURCE SEDIMENTATION LOADING OF DOWNSTREAM FACILITIES. SUCH INSTALLATION SHALL BE REGULARLY INSPECTED BY THE CITY OF ROUND ROCK FOR EFFECTIVENESS. ADDITIONAL MEASURES MAY BE REQUIRED IF, IN THE OPINION OF THE CITY ENGINEER, THEY ARE WARRANTED.
4. ALL TEMPORARY EROSION CONTROL MEASURES SHALL NOT BE REMOVED UNTIL FINAL INSPECTION AND APPROVAL OF THE PROJECT BY THE ENGINEER, IT SHALL BE THE RESPONSIBILITY OF THE CONTRACTOR TO MAINTAIN ALL TEMPORARY EROSION CONTROL STRUCTURES AND TO REMOVE EACH STRUCTURE AS APPROVED BY THE ENGINEER.
5. ALL MUD, DIRT, ROCKS, DEBRIS, ETC., SPILLED, TRACKED OR OTHERWISE DEPOSITED ON EXISTING PAVED STREETS, DRIVES AND AREAS USED BY THE PUBLIC SHALL BE CLEANED UP IMMEDIATELY.
6. THERE SHALL BE A DEDICATED CONCRETE TRUCK WASHOUT AREA AS PER TPDES GENERAL PERMIT TXR150000.
7. CONSTRUCTION SPOILS PLACED AT OFFSITE STORAGE AREAS MUST BE APPROVED IF SPOILS MATERIAL IS PLACED WITHIN CITY OF ROUND ROCK, SPOIL MATERIAL SHALL NOT BE PLACED, OR STORED, IN ANY FLOOD PLAIN AREAS WITHOUT APPROVAL FROM THE CITY ENGINEER, IF SPOILS MATERIAL IS PLACED WITHIN A FLOODPLAIN AREA, THE CONTRACTOR SHALL IMMEDIATELY REMOVE THE SPOIL AND RESTORE THE AREA TO ITS EXISTING CONTOURS PRIOR TO THE PLACEMENT OF THE SPOILS; ALL AT THE EXPENSE OF THE CONTRACTOR.

STREET AND DRAINAGE NOTES:

1. ALL TESTING SHALL BE DONE BY AN INDEPENDENT LABORATORY AT THE OWNER'S EXPENSE. ANY RETESTING SHALL BE PAID FOR BY THE CONTRACTOR. A CITY INSPECTOR SHALL BE PRESENT DURING ALL TESTS. TESTING SHALL BE COORDINATED WITH THE CITY INSPECTOR AND HE SHALL BE GIVEN A MINIMUM OF 24 HOURS NOTICE PRIOR TO ANY TESTING. TELEPHONE 512-218-5555 (TRANSPORTATION DEPARTMENT).
2. BASE MATERIAL SHALL BE FROM APPROVED STOCKPILES, OR PITS, PRIOR TO BEING PLACED IN CITY R.O.W. BACKFILL BEHIND THE CURB SHALL BE COMPACTED TO OBTAIN A MINIMUM OF 95% MAXIMUM DENSITY TO WITHIN 3" OF TOP OF CURB. MATERIAL USED SHALL BE PRIMARILY GRANULAR WITH NO ROCKS LARGER THAN 6" IN THE GREATEST DIMENSION. THE REMAINING 3" SHALL BE CLEAN TOPSOIL FREE FROM ALL CLODS AND SUITABLE FOR SUSTAINING PLANT LIFE.
3. DEPTH OF COVER FOR ALL CROSSINGS UNDER PAVEMENT INCLUDING GAS, ELECTRIC, TELEPHONE, CABLE TV, WATER SERVICES, ETC., SHALL BE A MINIMUM OF 30" BELOW SUBGRADE.
4. STREET RIGHTS-OF-WAY SHALL BE GRADED AT A SLOPE OF 1/4" PER FOOT TOWARD THE CURB UNLESS OTHERWISE INDICATED. HOWEVER, IN NO CASE SHALL THE WIDTH OF RIGHT-OF-WAY AT 1/4" PER FOOT SLOPE BE LESS THAN 10 FEET UNLESS A SPECIFIC REQUEST FOR AN ALTERNATE GRADING SCHEME IS MADE TO AND ACCEPTED BY THE CITY OF ROUND ROCK ENGINEERING AND DEVELOPMENT SERVICES DEPARTMENT.
5. BARRICADES BUILT TO CITY OF ROUND ROCK STANDARDS SHALL BE CONSTRUCTED ON ALL DEAD-END STREETS AND AS NECESSARY DURING CONSTRUCTION TO MAINTAIN JOB AND PUBLIC SAFETY.
6. ALL R.C.P. SHALL BE MINIMUM CLASS III. AND ALL BENDS, WYES, AND PIPE-SIZE TRANSITIONS SHALL BE PRE-FABRICATED AND FREE FROM DEFECTS.
7. THE SUBGRADE MATERIAL FOR THE STREETS SHOWN HEREIN WAS TESTED BY RABA KISTNER AND THE PAVING SECTIONS DESIGNED IN ACCORDANCE WITH THE CURRENT CITY OF ROUND ROCK DESIGN CRITERIA. THE PAVING SECTIONS ARE TO BE CONSTRUCTED AS FOLLOWS:

WYOMING SPRINGS DR. PAVEMENT SECTION

LAYER	THICKNESS
HMAC SURFACE COURSE TY. C (PG 70-22)	2.0 IN.
HMAC SURFACE COURSE TY. C (PG 64-22)	2.5 IN.
FLEXIBLE BASE	13 IN.
LIME TREATED SUBGRADE	8 IN. *
COMBINED TOTAL	25.5 IN.

* MAY BE REPLACED WITH 18 IN. OF MATERIAL WITH PI OF 20 OR LESS

THE GEOTECHNICAL ENGINEER SHALL INSPECT THE SUBGRADE FOR COMPLIANCE WITH THE DESIGN ASSUMPTIONS MADE DURING PREPARATION OF THE SOILS REPORT. ANY ADJUSTMENTS THAT ARE REQUIRED SHALL BE MADE THROUGH REVISION OF THE CONSTRUCTION PLANS.

8. WHERE PI'S ARE OVER 20, SUBGRADES MUST BE STABILIZED UTILIZING A METHOD ACCEPTABLE TO THE CITY ENGINEER. THE GEOTECHNICAL ENGINEER SHALL RECOMMEND AN APPROPRIATE SUBGRADE STABILIZATION IF SULFATES ARE DETERMINED TO BE PRESENT.
9. ALL BORES UNDER EXISTING ROADWAYS SHALL BE PRESSURE GROUTED ONCE THE BORE IS COMPLETE.

WATER AND WASTEWATER NOTES:

1. PIPE MATERIAL FOR WATER MAINS SHALL BE PVC (AWWA C-900, MIN. CLASS 200), OR DUCTILE IRON (AWWA C-100, MIN. CLASS 200). WATER SERVICES (2" OR LESS) SHALL BE POLYETHYLENE TUBING (BLACK, 200 PSI, DR 9).
2. PIPE MATERIAL FOR PRESSURE WASTEWATER MAINS SHALL BE PVC (AWWA C-900, MIN. CLASS 150), OR DUCTILE IRON (AWWA C -100, MIN. CLASS 200). PIPE MATERIAL FOR GRAVITY WASTEWATER MAINS SHALL BE PVC (ASTM D2241 OR D3034, MAX. DR-26), DUCTILE IRON (AWWA C-100, MIN. CLASS 200).
3. UNLESS OTHERWISE ACCEPTED BY THE CITY ENGINEER, DEPTH OF COVER FOR ALL LINES OUT OF THE PAVEMENT SHALL BE 42" MIN., AND DEPTH OF COVER FOR ALL LINES UNDER PAVEMENT SHALL BE A MIN. OF 30" BELOW SUBGRADE.
4. ALL FIRE HYDRANT LEADS SHALL BE DUCTILE IRON PIPE (AWWA C-100, MIN. CLASS 200).
5. FIRE HYDRANT FLOW TEST RESULTS ARE AS FOLLOWS: N/A
6. ALL IRON PIPE AND FITTINGS SHALL BE WRAPPED WITH MINIMUM 8-MIL POLYETHYLENE AND SEALED WITH DUCT TAPE OR EQUAL ACCEPTED BY THE CITY ENGINEER.
7. THE CONTRACTOR SHALL CONTACT THE CITY INSPECTOR AT 512-218-5555 TO COORDINATE UTILITY TIE-INS AND NOTIFY HIM AT LEAST 48 HOURS PRIOR TO CONNECTING TO EXISTING LINES.
8. UNLESS SHOWN OTHERWISE ON PLANS; ALL MANHOLES SHALL BE CONCRETE WITH CAST IRON RING AND COVER. ALL MANHOLES LOCATED OUTSIDE OF THE PAVEMENT SHALL HAVE BOLTED COVERS. TAPPING OF FIBERGLASS MANHOLES SHALL NOT BE ALLOWED.
9. THE CONTRACTOR MUST OBTAIN A BULK WATER PERMIT OR PURCHASE AND INSTALL A WATER METER FOR ALL WATER USED DURING CONSTRUCTION. A COPY OF THIS PERMIT MUST BE CARRIED AT ALL TIMES BY ALL WHO USE WATER.
10. LINE FLUSHING OR ANY ACTIVITY USING A LARGE QUANTITY OF WATER MUST BE SCHEDULED WITH THE WATER & WASTEWATER SUPERINTENDENT, TELEPHONE 512-218-5555.
11. THE CONTRACTOR, AT HIS EXPENSE, SHALL PERFORM STERILIZATION OF ALL POTABLE WATER LINES CONSTRUCTED AND SHALL PROVIDE ALL EQUIPMENT (INCLUDING TEST GAUGES), SUPPLIES (INCLUDING CONCENTRATED CHLORINE DISINFECTING MATERIAL), AND NECESSARY LABOR REQUIRED FOR THE STERILIZATION PROCEDURE. THE STERILIZATION PROCEDURE SHALL BE MONITORED BY CITY OF ROUND ROCK PERSONNEL. WATER SAMPLES WILL BE COLLECTED BY THE CITY OF ROUND ROCK TO VERIFY EACH TREATED LINE HAS ATTAINED AN INITIAL CHLORINE CONCENTRATION OF 50 PPM. WHERE MEANS OF FLUSHING IS NECESSARY, THE CONTRACTOR, AT HIS EXPENSE, SHALL PROVIDE FLUSHING DEVICES AND REMOVE SAID DEVICES PRIOR TO FINAL ACCEPTANCE BY THE CITY OF ROUND ROCK.
12. SAMPLING TAPS SHALL BE BROUGHT UP TO 3 FEET ABOVE GRADE AND SHALL BE EASILY ACCESSIBLE FOR CITY PERSONNEL. AT THE CONTRACTOR'S REQUEST, AND IN HIS PRESENCE, SAMPLES FOR BACTERIOLOGICAL TESTING WILL BE COLLECTED BY THE CITY OF ROUND ROCK NOT LESS THAN 24 HOURS AFTER THE TREATED LINE HAS BEEN FLUSHED OF THE CONCENTRATED CHLORINE SOLUTION AND CHARGED WITH WATER APPROVED BY THE CITY. THE CONTRACTOR SHALL SUPPLY A CHECK OR MONEY ORDER, PAYABLE TO THE CITY OF ROUND ROCK, TO COVER THE FEE CHARGED FOR TESTING EACH WATER SAMPLE. CITY OF ROUND ROCK FEE AMOUNTS MAY BE OBTAINED BY CALLING THE ENGINEERING AND DEVELOPMENT SERVICES DEPARTMENT AT 512-218-5555.
13. THE CONTRACTOR, AT HIS EXPENSE, SHALL PERFORM QUALITY TESTING FOR ALL WASTEWATER PIPE INSTALLED AND PRESSURE PIPE HYDROSTATIC TESTING OF ALL WATER LINES CONSTRUCTED AND SHALL PROVIDE ALL EQUIPMENT (INCLUDING PUMPS AND GAUGES), SUPPLIES AND LABOR NECESSARY TO PERFORM THE TESTS. QUALITY AND PRESSURE TESTING SHALL BE MONITORED BY CITY OF ROUND ROCK PERSONNEL.
14. THE CONTRACTOR SHALL COORDINATE TESTING WITH THE CITY OF INSPECTOR AND PROVIDE NO LESS THAN 24 HOURS NOTICE PRIOR TO PERFORMING STERILIZATION, QUALITY TESTING OR PRESSURE TESTING.
15. THE CONTRACTOR SHALL NOT OPEN OR CLOSE ANY VALVES UNLESS AUTHORIZED BY THE CITY OF ROUND ROCK.
16. ALL VALVE BOXES AND COVERS SHALL BE CAST IRON.
17. ALL WATER SERVICE, WASTEWATER SERVICE AND VALVE LOCATIONS SHALL BE APPROPRIATELY MARKED AS FOLLOWS:

WATER SERVICE "W" ON TOP OF CURB WASTEWATER SERVICE "S" ON TOP OF CURB VALVE "V" ON FACE OF CURB

TOOLS FOR MARKING THE CURB SHALL BE PROVIDED BY THE CONTRACTOR. OTHER APPROPRIATE MEANS OF MARKING SERVICE AND VALVE LOCATIONS SHALL BE PROVIDED IN AREAS WITHOUT CURBS. SUCH MEANS OF MARKING SHALL BE AS SPECIFIED BY THE ENGINEER AND ACCEPTED BY THE CITY OF ROUND ROCK.

18. CONTACT CITY OF ROUND ROCK ENGINEERING AND DEVELOPMENT SERVICES DEPARTMENT AT 512-218-5555 FOR ASSISTANCE IN OBTAINING EXISTING WATER AND WASTEWATER LOCATIONS.
19. THE CITY OF ROUND ROCK FIRE DEPARTMENT SHALL BE NOTIFIED 48 HOURS PRIOR TO TESTING OF ANY BUILDING SPRINKLER PIPING IN ORDER THAT THE FIRE DEPARTMENT MAY MONITOR SUCH TESTING.
20. SAND, AS DESCRIBED IN SPECIFICATION ITEM 510 PIPE, SHALL NOT BE USED AS BEDDING FOR WATER AND WASTEWATER LINES. ACCEPTABLE BEDDING MATERIALS ARE PIPE BEDDING STONE, PEA GRAVEL AND IN LIEU OF SAND, A NATURALLY OCCURRING OR MANUFACTURED STONE MATERIAL CONFORMING TO ASTM C33 FOR STONE QUALITY AND MEETING THE FOLLOWING GRADATION SPECIFICATION:

SIEVE SIZE	PERCENT RETAINED BY WEIGHT
1/2"	0.00
3/8"	0-2
NO. 4	40-85
NO. 10	95-100

21. THE CONTRACTOR IS HEREBY NOTIFIED THAT CONNECTING TO, SHUTTING DOWN, OR TERMINATING EXISTING UTILITY LINES MAY HAVE TO OCCUR AT OFF-PEAK HOURS. SUCH HOURS ARE USUALLY OUTSIDE NORMAL WORKING HOURS AND POSSIBLY BETWEEN 12 A.M. AND 6 A.M.
22. ALL WASTEWATER CONSTRUCTION SHALL BE IN ACCORDANCE WITH THE TEXAS COMMISSION ON ENVIRONMENTAL QUALITY (TCEQ) REGULATIONS, 30 TAC CHAPTER 213 AND 317, AS APPLICABLE. WHENEVER TCEQ AND CITY OF ROUND ROCK SPECIFICATIONS CONFLICT, THE MORE STRINGENT SHALL APPLY.

TRENCH SAFETY NOTES:

1. IN ACCORDANCE WITH THE LAWS OF THE STATE OF TEXAS AND THE U. S. OCCUPATIONAL SAFETY AND HEALTH ADMINISTRATION REGULATIONS, ALL TRENCHES OVER 5 FEET IN DEPTH IN EITHER HARD AND COMPACT OR SOFT AND UNSTABLE SOIL SHALL BE SLOPED, SHORED, SHEETED, BRACED OR OTHERWISE SUPPORTED, FURTHERMORE, ALL TRENCHES LESS THAN 5 FEET IN DEPTH SHALL ALSO BE EFFECTIVELY PROTECTED WHEN HAZARDOUS GROUND MOVEMENT MAY BE EXPECTED. TRENCH SAFETY SYSTEMS TO BE UTILIZED FOR THIS PROJECT (WILL BE PROVIDED BY THE CONTRACTOR).
2. IN ACCORDANCE WITH THE U. S. OCCUPATIONAL SAFETY AND HEALTH ADMINISTRATION REGULATIONS, WHEN PERSONS ARE IN TRENCHES 4-FEET DEEP OR MORE, ADEQUATE MEANS OF EXIT, SUCH AS A LADDER OR STEPS, MUST BE PROVIDED AND LOCATED SO AS TO REQUIRE NO MORE THAN 25 FEET OF LATERAL TRAVEL.
3. IF TRENCH SAFETY SYSTEM DETAILS WERE NOT PROVIDED IN THE PLANS BECAUSE TRENCHES WERE ANTICIPATED TO BE LESS THAN 5 FEET IN DEPTH AND DURING CONSTRUCTION IT IS FOUND THAT TRENCHES ARE IN FACT 5 FEET OR MORE IN DEPTH OR TRENCHES LESS THAN 5 FEET IN DEPTH ARE IN AN AREA WHERE HAZARDOUS GROUND MOVEMENT IS EXPECTED, ALL CONSTRUCTION SHALL CEASE, THE TRENCHED AREA SHALL BE BARRICADED AND THE ENGINEER NOTIFIED IMMEDIATELY. CONSTRUCTION SHALL NOT RESUME UNTIL APPROPRIATE TRENCH SAFETY SYSTEM DETAILS, AS DESIGNED BY A PROFESSIONAL ENGINEER, ARE RETAINED AND COPIES SUBMITTED TO THE CITY OF ROUND ROCK.

TRAFFIC MARKING NOTES:

1. ANY METHODS, STREET MARKINGS AND SIGNAGE NECESSARY FOR WARNING MOTORISTS, WARNING PEDESTRIANS OR DIVERTING TRAFFIC DURING CONSTRUCTION SHALL CONFORM TO THE TEXAS MANUAL OF UNIFORM TRAFFIC CONTROL DEVICES FOR STREETS AND HIGHWAYS, LATEST EDITION.
2. ALL PAVEMENT MARKINGS, MARKERS, PAINT, TRAFFIC BUTTONS, TRAFFIC CONTROLS AND SIGNS SHALL BE INSTALLED IN ACCORDANCE WITH THE TEXAS DEPARTMENT OF TRANSPORTATION STANDARD SPECIFICATIONS FOR CONSTRUCTION OF HIGHWAYS, STREETS AND BRIDGES AND, THE TEXAS MANUAL OF UNIFORM TRAFFIC CONTROL DEVICES FOR STREETS AND HIGHWAYS, LATEST EDITIONS.

811 Know what's **below.** **Call** before you dig.

THE INFORMATION SHOWN ON THESE DRAWINGS INDICATING SIZE, TYPE AND LOCATION OF UNDERGROUND, SURFACE, AND AERIAL UTILITIES IS NOT GUARANTEED TO BE EXACT OR COMPLETE. THE CONTRACTOR SHALL CONTACT THE ROUND ROCK AREA "ONE CALL" SYSTEM AT 1-800-344-8377 (DIG TESS)48 HOURS PRIOR TO BEGINNING ANY EXCAVATION FOR EXISTING UTILITY LOCATIONS. THE CONTRACTOR SHALL ALSO BE FULLY RESPONSIBLE FOR FIELD VERIFYING LOCATIONS AND ELEVATIONS OF ALL EXISTING UTILITIES AFFECTED BY CONSTRUCTION FOR THIS PROJECT IN ORDER TO AVOID DAMAGING THOSE UTILITIES, AND SHALL IMMEDIATELY ARRANGE FOR REPAIR AND RESTORATION OF CONTRACTOR-DAMAGED UTILITIES TO THE UTILITY COMPANY'S APPROVAL AT THE EXPENSE OF THE CONTRACTOR.

WYOMING SPRINGS
SEGMENT 1
ROUND ROCK, TX

ROUND ROCK TEXAS

halff
13620 BRANTWICK DR
BLDG C, STE 100
AUSTIN, TX 78729
(512) 777-4600
TBPELS FIRM #312

Revision No.	Date	Description

F-312 U.S. 123
STATE OF TEXAS
JEFFREY L NAGY
133255
LICENSED
PROFESSIONAL ENGINEER

100% SUBMITTAL

Project No.:	36179.002
Issued:	4/14/2023
Drawn By:	SG
Checked By:	JN
Scale:	N.T.S

Sheet Title
GENERAL NOTES
(1 OF 2)

3
Sheet Number

USER: JASON.NEWMAN@HALFF.COM
DWG: C:\Users\jason.newman\ACCDocs\Halff AE\Wyoming Springs Segment 1\Project Files\Drawings\Wyoming Springs Segment 1 - GENERAL NOTES (1 OF 2).dwg
LAST SAVED: 4/13/2023 3:11:55 PM
PLOTTED: 4/14/2023

TEXAS COMMISSION ON ENVIRONMENTAL QUALITY
WATER POLLUTION ABATEMENT PLAN
GENERAL CONSTRUCTION NOTES

1. A WRITTEN NOTICE OF CONSTRUCTION MUST BE SUBMITTED TO THE TCEQ REGIONAL OFFICE AT LEAST 48 HOURS PRIOR TO THE START OF ANY REGULATED ACTIVITIES. THIS NOTICE MUST INCLUDE:
   - THE NAME OF THE APPROVED PROJECT;
   - THE ACTIVITY START DATE; AND
   - THE CONTACT INFORMATION OF THE PRIME CONTRACTOR.
2. ALL CONTRACTORS CONDUCTING REGULATED ACTIVITIES ASSOCIATED WITH THIS PROJECT MUST BE PROVIDED WITH COMPLETE COPIES OF THE APPROVED WATER POLLUTION ABATEMENT PLAN (WPAP) AND THE TCEQ LETTER INDICATING THE SPECIFIC CONDITIONS OF ITS APPROVAL. DURING THE COURSE OF THESE REGULATED ACTIVITIES, THE CONTRACTORS ARE REQUIRED TO KEEP ON-SITE COPIES OF THE APPROVED PLAN AND APPROVAL LETTER.
3. IF ANY SENSITIVE FEATURE(S) (CAVES, SOLUTION CAVITY, SINK HOLE, ETC.) IS DISCOVERED DURING CONSTRUCTION, ALL REGULATED ACTIVITIES NEAR THE SENSITIVE FEATURE MUST BE SUSPENDED IMMEDIATELY. THE APPROPRIATE TCEQ REGIONAL OFFICE MUST BE IMMEDIATELY NOTIFIED OF ANY SENSITIVE FEATURES ENCOUNTERED DURING CONSTRUCTION. CONSTRUCTION ACTIVITIES MAY NOT BE RESUMED UNTIL THE TCEQ HAS REVIEWED AND APPROVED THE APPROPRIATE PROTECTIVE MEASURES IN ORDER TO PROTECT ANY SENSITIVE FEATURE AND THE EDWARDS AQUIFER FROM POTENTIALLY ADVERSE IMPACTS TO WATER QUALITY.
4. NO TEMPORARY OR PERMANENT HAZARDOUS SUBSTANCE STORAGE TANK SHALL BE INSTALLED WITHIN 150 FEET OF A WATER SUPPLY SOURCE, DISTRIBUTION SYSTEM, WELL, OR SENSITIVE FEATURE.
5. PRIOR TO BEGINNING ANY CONSTRUCTION ACTIVITY, ALL TEMPORARY EROSION AND SEDIMENTATION (E&S) CONTROL MEASURES MUST BE PROPERLY INSTALLED AND MAINTAINED IN ACCORDANCE WITH THE APPROVED PLANS AND MANUFACTURERS SPECIFICATIONS. IF INSPECTIONS INDICATE A CONTROL HAS BEEN USED INAPPROPRIATELY, OR INCORRECTLY, THE APPLICANT MUST REPLACE OR MODIFY THE CONTROL FOR SITE SITUATIONS. THESE CONTROLS MUST REMAIN IN PLACE UNTIL THE DISTURBED AREAS HAVE BEEN PERMANENTLY STABILIZED.
6. ANY SEDIMENT THAT ESCAPES THE CONSTRUCTION SITE MUST BE COLLECTED AND PROPERLY DISPOSED OF BEFORE THE NEXT RAIN EVENT TO ENSURE IT IS NOT WASHED INTO SURFACE STREAMS, SENSITIVE FEATURES, ETC.
7. SEDIMENT MUST BE REMOVED FROM SEDIMENT TRAPS OR SEDIMENTATION BASINS NOT LATER THAN WHEN IT OCCUPIES 50% OF THE BASIN'S DESIGN CAPACITY.
8. LITTER, CONSTRUCTION DEBRIS, AND CONSTRUCTION CHEMICALS EXPOSED TO STORMWATER SHALL BE PREVENTED FROM BEING DISCHARGED OFFSITE.
9. ALL SPOILS (EXCAVATED MATERIAL) GENERATED FROM THE PROJECT SITE MUST BE STORED ON-SITE WITH PROPER E&S CONTROLS. FOR STORAGE OR DISPOSAL OF SPOILS AT ANOTHER SITE ON THE EDWARDS AQUIFER RECHARGE ZONE, THE OWNER OF THE SITE MUST RECEIVE APPROVAL OF A WATER POLLUTION ABATEMENT PLAN FOR THE PLACEMENT OF FILL MATERIAL OR MASS GRADING PRIOR TO THE PLACEMENT OF SPOILS AT THE OTHER SITE.
10. IF PORTIONS OF THE SITE WILL HAVE A TEMPORARY OR PERMANENT CEASE IN CONSTRUCTION ACTIVITY LASTING LONGER THAN 14 DAYS, SOIL STABILIZATION IN THOSE AREAS SHALL BE INITIATED AS SOON AS POSSIBLE PRIOR TO THE 14TH DAY OF INACTIVITY. IF ACTIVITY WILL RESUME PRIOR THE 21ST DAY, STABILIZATION MEASURES ARE NOT REQUIRED. IF DROUGHT CONDITIONS OR INCLEMENT WEATHER PREVENT ACTION BY THE 14TH DAY, STABILIZATION MEASURES SHALL BE INITIATED AS SOON AS POSSIBLE.
11. THE FOLLOWING RECORDS SHALL BE MAINTAINED AND MADE AVAILABLE TO THE TCEQ UPON REQUEST:
    - THE DATES WHEN MAJOR GRADING ACTIVITIES OCCUR;
    - THE DATES WHEN CONSTRUCTION ACTIVITIES TEMPORARILY OR PERMANENTLY CEASE ON A PORTION OF THE SITE; AND
    - AND THE DATES WHEN STABILIZATION MEASURES ARE INITIATED.
12. THE HOLDER OF ANY APPROVED EDWARDS AQUIFER PROTECTION PLAN MUST NOTIFY THE APPROPRIATE REGIONAL OFFICE IN WRITING AND OBTAIN APPROVAL FROM THE EXECUTIVE DIRECTOR PRIOR TO INITIATING ANY OF THE FOLLOWING:
    - ANY PHYSICAL OR OPERATIONAL MODIFICATION OF ANY WATER POLLUTION ABATEMENT STRUCTURE(S), INCLUDING BUT NOT LIMITED TO PONDS, DAMS, BERMS, SEWAGE TREATMENT PLANTS, AND DIVERSIONARY STRUCTURES;
    - ANY CHANGE IN THE NATURE OR CHARACTER OF THE REGULATED ACTIVITY FROM THAT WHICH WAS ORIGINALLY APPROVED OR A CHANGE WHICH WOULD SIGNIFICANTLY IMPACT THE ABILITY OF THE PLAN TO PREVENT POLLUTION OF THE EDWARDS AQUIFER;
    - ANY DEVELOPMENT OF LAND PREVIOUSLY IDENTIFIED AS UNDEVELOPED IN THE ORIGINAL WATER POLLUTION ABATEMENT PLAN.

AUSTIN REGIONAL OFFICE

12100 PARK 35 CIRCLE, BLDG. A
Austin, Texas 78753-1808
Phone (512) 339-2929
Fax (512) 339-3795

TEXAS COMMISSION ON ENVIRONMENTAL QUALITY
ORGANIZED SEWAGE COLLECTION SYSTEM
GENERAL CONSTRUCTION NOTES

1. THIS ORGANIZED SEWAGE COLLECTION SYSTEM (SCS) MUST BE CONSTRUCTED IN ACCORDANCE WITH 30 TEXAS ADMINISTRATIVE CODE (TAC) §213.5(C), THE TEXAS COMMISSION ON ENVIRONMENTAL QUALITY'S (TCEQ) EDWARDS AQUIFER RULES AND ANY LOCAL GOVERNMENT STANDARD SPECIFICATIONS.
2. ALL CONTRACTORS CONDUCTING REGULATED ACTIVITIES ASSOCIATED WITH THIS PROPOSED REGULATED PROJECT MUST BE PROVIDED WITH COPIES OF THE SCS PLAN AND THE TCEQ LETTER INDICATING THE SPECIFIC CONDITIONS OF ITS APPROVAL. DURING THE COURSE OF THESE REGULATED ACTIVITIES, THE CONTRACTORS MUST BE REQUIRED TO KEEP ON-SITE COPIES OF THE PLAN AND THE APPROVAL LETTER.
3. A WRITTEN NOTICE OF CONSTRUCTION MUST BE SUBMITTED TO THE PRESIDING TCEQ REGIONAL OFFICE AT LEAST 48 HOURS PRIOR TO THE START OF ANY REGULATED ACTIVITIES. THIS NOTICE MUST INCLUDE:
   THE NAME OF THE APPROVED PROJECT;
   THE ACTIVITY START DATE; AND
   THE CONTACT INFORMATION OF THE PRIME CONTRACTOR.
4. ANY MODIFICATION TO THE ACTIVITIES DESCRIBED IN THE REFERENCED SCS APPLICATION FOLLOWING THE DATE OF APPROVAL MAY REQUIRE THE SUBMITTAL OF AN SCS APPLICATION TO MODIFY THIS APPROVAL, INCLUDING THE PAYMENT OF APPROPRIATE FEES AND ALL INFORMATION NECESSARY FOR ITS REVIEW AND APPROVAL.
5. PRIOR TO BEGINNING ANY CONSTRUCTION ACTIVITY, ALL TEMPORARY EROSION AND SEDIMENTATION (E&S) CONTROL MEASURES MUST BE PROPERLY INSTALLED AND MAINTAINED IN ACCORDANCE WITH THE MANUFACTURERS SPECIFICATIONS. THESE CONTROLS MUST REMAIN IN PLACE UNTIL THE DISTURBED AREAS HAVE BEEN PERMANENTLY STABILIZED.
6. IF ANY SENSITIVE FEATURES ARE DISCOVERED DURING THE WASTEWATER LINE TRENCHING ACTIVITIES, ALL REGULATED ACTIVITIES NEAR THE SENSITIVE FEATURE MUST BE SUSPENDED IMMEDIATELY. THE APPLICANT MUST IMMEDIATELY NOTIFY THE APPROPRIATE REGIONAL OFFICE OF THE TCEQ OF THE FEATURE DISCOVERED. A GEOLOGIST'S ASSESSMENT OF THE LOCATION AND EXTENT OF THE FEATURE DISCOVERED MUST BE REPORTED TO THAT REGIONAL OFFICE IN WRITING AND THE APPLICANT MUST SUBMIT A PLAN FOR ENSURING THE STRUCTURAL INTEGRITY OF THE SEWER LINE OR FOR MODIFYING THE PROPOSED COLLECTION SYSTEM ALIGNMENT AROUND THE FEATURE. THE REGULATED ACTIVITIES NEAR THE SENSITIVE FEATURE MAY NOT PROCEED UNTIL THE EXECUTIVE DIRECTOR HAS REVIEWED AND APPROVED THE METHODS PROPOSED TO PROTECT THE SENSITIVE FEATURE AND THE EDWARDS AQUIFER FROM ANY POTENTIALLY ADVERSE IMPACTS TO WATER QUALITY WHILE MAINTAINING THE STRUCTURAL INTEGRITY OF THE LINE.
7. SEWER LINES LOCATED WITHIN OR CROSSING THE 5-YEAR FLOODPLAIN OF A DRAINAGE WAY WILL BE PROTECTED FROM INUNDATION AND STREAM VELOCITIES WHICH COULD CAUSE EROSION AND SCOURING OF BACKFILL. THE TRENCH MUST BE CAPPED WITH CONCRETE TO PREVENT SCOURING OF BACKFILL OR THE SEWER LINES MUST BE ENCASED IN CONCRETE. ALL CONCRETE SHALL HAVE A MINIMUM THICKNESS OF 6 INCHES.
8. BLASTING PROCEDURES FOR PROTECTION OF EXISTING SEWER LINES AND OTHER UTILITIES WILL BE IN ACCORDANCE WITH THE NATIONAL FIRE PROTECTION ASSOCIATION CRITERIA. SAND IS NOT ALLOWED AS BEDDING OR BACKFILL IN TRENCHES THAT HAVE BEEN BLASTED. IF ANY EXISTING SEWER LINES ARE DAMAGED, THE LINES MUST BE REPAIRED AND RETESTED.
9. ALL MANHOLES CONSTRUCTED OR REHABILITATED ON THIS PROJECT MUST HAVE WATERTIGHT SIZE ON SIZE RESILIENT CONNECTORS ALLOWING FOR DIFFERENTIAL SETTLEMENT. IF MANHOLES ARE CONSTRUCTED WITHIN THE 100-YEAR FLOODPLAIN, THE COVER MUST HAVE A GASKET AND BE BOLTED TO THE RING. WHERE GASKETED MANHOLE COVERS ARE REQUIRED FOR MORE THAN THREE MANHOLES IN SEQUENCE OR FOR MORE THAN 1500 FEET, ALTERNATE MEANS OF VENTING WILL BE PROVIDED. BRICKS ARE NOT AN ACCEPTABLE CONSTRUCTION MATERIAL FOR ANY PORTION OF THE MANHOLE.

   THE DIAMETER OF THE MANHOLES MUST BE A MINIMUM OF FOUR FEET AND THE MANHOLE FOR ENTRY MUST HAVE A MINIMUM CLEAR OPENING DIAMETER OF 30 INCHES. THESE DIMENSIONS AND OTHER DETAILS SHOWING COMPLIANCE WITH THE COMMISSION'S RULES CONCERNING MANHOLES AND SEWER LINE/MANHOLE INVERTS DESCRIBED IN 30 TAC §217.55 ARE INCLUDED ON PLAN SHEET 47 OF 51.

   IT IS SUGGESTED THAT ENTRANCE INTO MANHOLES IN EXCESS OF FOUR FEET DEEP BE ACCOMPLISHED BY MEANS OF A PORTABLE LADDER. THE INCLUSION OF STEPS IN A MANHOLE IS PROHIBITED.

   WHERE WATER LINES AND NEW SEWER LINE ARE INSTALLED WITH A SEPARATION DISTANCE CLOSER THAN NINE FEET (I.E., WATER LINES CROSSING WASTEWATER LINES, WATER LINES PARALLELING WASTEWATER LINES, OR WATER LINES NEXT TO MANHOLES) THE INSTALLATION MUST MEET THE REQUIREMENTS OF 30 TAC §217.53(D) (PIPE DESIGN) AND 30 TAC §290.44(E) (WATER DISTRIBUTION).
10. WHERE WATER LINES AND NEW SEWER LINE ARE INSTALLED WITH A SEPARATION DISTANCE CLOSER THAN NINE FEET (I.E., WATER LINES CROSSING WASTEWATER LINES, WATER LINES PARALLELING WASTEWATER LINES, OR WATER LINES NEXT TO MANHOLES) THE INSTALLATION MUST MEET THE REQUIREMENTS OF 30 TAC §217.53(D) (PIPE DESIGN) AND 30 TAC §290.44(E) WATER DISTRIBUTIONS.
11. WHERE SEWERS LINES DEVIATE FROM STRAIGHT ALIGNMENT AND UNIFORM GRADE ALL CURVATURE OF SEWER PIPE MUST BE ACHIEVED BY THE FOLLOWING PROCEDURE WHICH IS RECOMMENDED BY THE PIPE MANUFACTURER: NOT APPLICABLE .

    IF PIPE FLEXURE IS PROPOSED, THE FOLLOWING METHOD OF PREVENTING DEFLECTION OF THE JOINT MUST BE USED: NOT APPLICABLE .

    SPECIFIC CARE MUST BE TAKEN TO ENSURE THAT THE JOINT IS PLACED IN THE CENTER OF THE TRENCH AND PROPERLY BEDDED IN ACCORDANCE WITH 30 TAC §217.54.
12. NEW SEWAGE COLLECTION SYSTEM LINES MUST BE CONSTRUCTED WITH STUB OUTS FOR THE CONNECTION OF ANTICIPATED EXTENSIONS. THE LOCATION OF SUCH STUB OUTS MUST BE MARKED ON THE GROUND SUCH THAT THEIR LOCATION CAN BE EASILY DETERMINED AT THE TIME OF CONNECTION OF THE EXTENSIONS. SUCH STUB OUTS MUST BE MANUFACTURED WYES OR TEES THAT ARE COMPATIBLE IN SIZE AND MATERIAL WITH BOTH THE SEWER LINE AND THE EXTENSION. AT THE TIME OF ORIGINAL CONSTRUCTION, NEW STUB-OUTS MUST BE CONSTRUCTED SUFFICIENTLY TO EXTEND BEYOND THE END OF THE STREET PAVEMENT. ALL STUB-OUTS MUST BE SEALED WITH A MANUFACTURED CAP TO PREVENT LEAKAGE. EXTENSIONS THAT WERE NOT ANTICIPATED AT THE TIME OF ORIGINAL CONSTRUCTION OR THAT ARE TO BE CONNECTED TO AN EXISTING SEWER LINE NOT FURNISHED WITH STUB OUTS MUST BE CONNECTED USING A MANUFACTURED SADDLE AND IN ACCORDANCE WITH ACCEPTED PLUMBING TECHNIQUES.

    IF NO STUB-OUT IS PRESENT AN ALTERNATE METHOD OF JOINING LATERALS IS SHOWN IN THE DETAIL ON PLAN SHEET N/A OF N/A. (FOR POTENTIAL FUTURE LATERALS).

    THE PRIVATE SERVICE LATERAL STUB-OUTS MUST BE INSTALLED AS SHOWN ON THE PLAN AND PROFILE SHEETS ON PLAN SHEET NAOF NAAND MARKED AFTER BACKFILLING AS SHOWN IN THE DETAIL ON PLAN SHEET NAOF NA
13. TRENCHING, BEDDING AND BACKFILL MUST CONFORM WITH 30 TAC §217.54. THE BEDDING AND BACKFILL FOR FLEXIBLE PIPE MUST COMPLY WITH THE STANDARDS OF ASTM D-2321, CLASSES IA, IB, II OR III. RIGID PIPE BEDDING MUST COMPLY WITH THE REQUIREMENTS OF ASTM C 12 (ANSI A 106.2) CLASSES A, B OR C.
14. SEWER LINES MUST BE TESTED FROM MANHOLE TO MANHOLE. WHEN A NEW SEWER LINE IS CONNECTED TO AN EXISTING STUB OR CLEAN-OUT, IT MUST BE TESTED FROM EXISTING MANHOLE TO NEW MANHOLE. IF A STUB OR CLEAN-OUT IS USED AT THE END OF THE PROPOSED SEWER LINE, NO PRIVATE SERVICE ATTACHMENTS MAY BE CONNECTED BETWEEN THE LAST MANHOLE AND THE CLEANOUT UNLESS IT CAN BE CERTIFIED AS CONFORMING WITH THE PROVISIONS OF 30 TAC §213.5(C)(3)(E).
15. ALL SEWER LINES MUST BE TESTED IN ACCORDANCE WITH 30 TAC §217.57. THE ENGINEER MUST RETAIN COPIES OF ALL TEST RESULTS WHICH MUST BE MADE AVAILABLE TO THE EXECUTIVE DIRECTOR UPON REQUEST. THE ENGINEER MUST CERTIFY IN WRITING THAT ALL WASTEWATER LINES HAVE PASSED ALL REQUIRED TESTING TO THE APPROPRIATE REGIONAL OFFICE WITHIN 30 DAYS OF TEST COMPLETION AND PRIOR TO USE OF THE NEW COLLECTION SYSTEM. TESTING METHOD WILL BE:

a. FOR A COLLECTION SYSTEM PIPE THAT WILL TRANSPORT WASTEWATER BY GRAVITY FLOW, THE DESIGN MUST SPECIFY AN INFILTRATION AND EXFILTRATION TEST OR A LOW-PRESSURE AIR TEST. A TEST MUST CONFORM TO THE FOLLOWING REQUIREMENTS:

(1) *LOW PRESSURE AIR TEST*

A. A LOW PRESSURE AIR TEST MUST FOLLOW THE PROCEDURES DESCRIBED IN AMERICAN SOCIETY FOR TESTING AND MATERIALS (ASTM) C-828, ASTM C-924, OR ASTM F-1417 OR OTHER PROCEDURE APPROVED BY THE EXECUTIVE DIRECTOR, EXCEPT AS TO TESTING TIMES AS REQUIRED IN TABLE C.3 IN SUBPARAGRAPH (C) OF THIS PARAGRAPH OR EQUATION C.3 IN SUBPARAGRAPH (B)(II) OF THIS PARAGRAPH.

B. FOR SECTIONS OF COLLECTION SYSTEM PIPE LESS THAN 36 INCH AVERAGE INSIDE DIAMETER, THE FOLLOWING PROCEDURE MUST APPLY, UNLESS A PIPE IS TO BE TESTED AS REQUIRED BY PARAGRAPH (2) OF THIS SUBSECTION.

(i) A PIPE MUST BE PRESSURIZED TO 3.5 POUNDS PER SQUARE INCH (PSI) GREATER THAN THE PRESSURE EXERTED BY GROUNDWATER ABOVE THE PIPE.

(ii) ONCE THE PRESSURE IS STABILIZED, THE MINIMUM TIME ALLOWABLE FOR THE PRESSURE TO DROP FROM 3.5 PSI GAUGE TO 2.5 PSI GAUGE IS COMPUTED FROM THE FOLLOWING EQUATION:

EQUATION C.3

WHERE:

T = TIME FOR PRESSURE TO DROP 1.0 POUND PER SQUARE INCH GAUGE IN SECONDS
K = 0.000419 X D X L, BUT NOT LESS THAN 1.0
D = AVERAGE INSIDE PIPE DIAMETER IN INCHES
L = LENGTH OF LINE OF SAME SIZE BEING TESTED, IN FEET
Q = RATE OF LOSS, 0.0015 CUBIC FEET PER MINUTE PER SQUARE FOOT INTERNAL SURFACE

C. SINCE A K VALUE OF LESS THAN 1.0 MAY NOT BE USED, THE MINIMUM TESTING TIME FOR EACH PIPE DIAMETER IS SHOWN IN THE FOLLOWING TABLE C.3:

PIPE DIAMETER (In)	MINIMUM TIME (sec)	MAXIMUM LENGTH FOR MINIMUM TIME (ft)	TIME FOR LONGER LENGTH (sec/ft)
6	340	398	0,8550
8	454	298	1,5200
10	567	239	2,3740
12	680	199	3,4190
15	850	159	5,3420
18	1020	133	7,6930
21	1190	114	10,4710
24	1360	100	13,6760
27	1530	88	17,3090
30	1700	80	21,3690
33	1870	72	25,8560

D. AN OWNER MAY STOP A TEST IF NO PRESSURE LOSS HAS OCCURRED DURING THE FIRST 25% OF THE CALCULATED TESTING TIME.

E. IF ANY PRESSURE LOSS OR LEAKAGE HAS OCCURRED DURING THE FIRST 25% OF A TESTING PERIOD, THEN THE TEST MUST CONTINUE FOR THE ENTIRE TEST DURATION AS OUTLINED ABOVE OR UNTIL FAILURE.

F. WASTEWATER COLLECTION SYSTEM PIPES WITH A 27 INCH OR LARGER AVERAGE INSIDE DIAMETER MAY BE AIR TESTED AT EACH JOINT INSTEAD OF FOLLOWING THE PROCEDURE OUTLINED IN THIS SECTION.

G. A TESTING PROCEDURE FOR PIPE WITH AN INSIDE DIAMETER GREATER THAN 33 INCHES MUST BE APPROVED BY THE EXECUTIVE DIRECTOR.

(2) INFILTRATION/EXFILTRATION TEST.

A. THE TOTAL EXFILTRATION, AS DETERMINED BY A HYDROSTATIC HEAD TEST, MUST NOT EXCEED 50 GALLONS PER INCH OF DIAMETER PER MILE OF PIPE PER 24 HOURS AT A MINIMUM TEST HEAD OF 2.0 FEET ABOVE THE CROWN OF A PIPE AT AN UPSTREAM MANHOLE.

B. AN OWNER SHALL USE AN INFILTRATION TEST IN LIEU OF AN EXFILTRATION TEST WHEN PIPES ARE INSTALLED BELOW THE GROUNDWATER LEVEL.

C. THE TOTAL EXFILTRATION, AS DETERMINED BY A HYDROSTATIC HEAD TEST, MUST NOT EXCEED 50 GALLONS PER INCH DIAMETER PER MILE OF PIPE PER 24 HOURS AT A MINIMUM TEST HEAD OF TWO FEET ABOVE THE CROWN OF A PIPE AT AN UPSTREAM MANHOLE, OR AT LEAST TWO FEET ABOVE EXISTING GROUNDWATER LEVEL, WHICHEVER IS GREATER.

D. FOR CONSTRUCTION WITHIN A 25-YEAR FLOOD PLAIN, THE INFILTRATION OR EXFILTRATION MUST NOT EXCEED 10 GALLONS PER INCH DIAMETER PER MILE OF PIPE PER 24 HOURS AT THE SAME MINIMUM TEST HEAD AS IN SUBPARAGRAPH (C) OF THIS PARAGRAPH.

E. IF THE QUANTITY OF INFILTRATION OR EXFILTRATION EXCEEDS THE MAXIMUM QUANTITY SPECIFIED, AN OWNER SHALL UNDERTAKE REMEDIAL ACTION IN ORDER TO REDUCE THE INFILTRATION OR EXFILTRATION TO AN AMOUNT WITHIN THE LIMITS SPECIFIED. AN OWNER SHALL RETEST A PIPE FOLLOWING A REMEDIATION ACTION.

F. IF A GRAVITY COLLECTION PIPE IS COMPOSED OF FLEXIBLE PIPE, DEFLECTION TESTING IS ALSO REQUIRED. THE FOLLOWING PROCEDURES MUST BE FOLLOWED:

(1) FOR A COLLECTION PIPE WITH INSIDE DIAMETER LESS THAN 27 INCHES, DEFLECTION MEASUREMENT REQUIRES A RIGID MANDREL.

A. MANDREL SIZING

(i) A RIGID MANDREL MUST HAVE AN OUTSIDE DIAMETER (OD) NOT LESS THAN 95% OF THE BASE INSIDE DIAMETER (ID) OR AVERAGE ID OF A PIPE, AS SPECIFIED IN THE APPROPRIATE STANDARD BY THE ASTMS, AMERICAN WATER WORKS ASSOCIATION, UNI-BELL, OR AMERICAN NATIONAL STANDARDS INSTITUTE, OR ANY RELATED APPENDIX.

(ii) IF A MANDREL SIZING DIAMETER IS NOT SPECIFIED IN THE APPROPRIATE STANDARD, THE MANDREL MUST HAVE AN OD EQUAL TO 95% OF THE ID OF A PIPE. IN THIS CASE, THE ID OF THE PIPE, FOR THE PURPOSE OF DETERMINING THE OD OF THE MANDREL, MUST EQUAL BE THE AVERAGE OUTSIDE DIAMETER MINUS TWO MINIMUM WALL THICKNESSES FOR OD CONTROLLED PIPE AND THE AVERAGE INSIDE DIAMETER FOR ID CONTROLLED PIPE.

(iii) ALL DIMENSIONS MUST MEET THE APPROPRIATE STANDARD.

B. MANDREL DESIGN.

(I) A RIGID MANDREL MUST BE CONSTRUCTED OF A METAL OR A RIGID PLASTIC MATERIAL THAT CAN WITHSTAND 200 PSI WITHOUT BEING DEFORMED.

(ii) A MANDREL MUST HAVE NINE OR MORE ODD NUMBER OF RUNNERS OR LEGS.

(iii) A BARREL SECTION LENGTH MUST EQUAL AT LEAST 75% OF THE INSIDE DIAMETER OF A PIPE.

(iv) EACH SIZE MANDREL MUST USE A SEPARATE PROVING RING.

C. METHOD OPTIONS.

(i) AN ADJUSTABLE OR FLEXIBLE MANDREL IS PROHIBITED.

(ii) A TEST MAY NOT USE TELEVISION INSPECTION AS A SUBSTITUTE FOR A DEFLECTION TEST.

(iii) IF REQUESTED, THE EXECUTIVE DIRECTOR MAY APPROVE THE USE OF A DEFLECTOMETER OR A MANDREL WITH REMOVABLE LEGS OR RUNNERS ON A CASE-BY-CASE BASIS.

(2) FOR A GRAVITY COLLECTION SYSTEM PIPE WITH AN INSIDE DIAMETER 27 INCHES AND GREATER, OTHER TEST METHODS MAY BE USED TO DETERMINE VERTICAL DEFLECTION.

(3) A DEFLECTION TEST METHOD MUST BE ACCURATE TO WITHIN PLUS OR MINUS 0.2% DEFLECTION.

(4) AN OWNER SHALL NOT CONDUCT A DEFLECTION TEST UNTIL AT LEAST 30 DAYS AFTER THE FINAL BACKFILL.

(5) GRAVITY COLLECTION SYSTEM PIPE DEFLECTION MUST NOT EXCEED FIVE PERCENT (5%).

(6) IF A PIPE SECTION FAILS A DEFLECTION TEST, AN OWNER SHALL CORRECT THE PROBLEM AND CONDUCT A SECOND TEST AFTER THE FINAL BACKFILL HAS BEEN IN PLACE AT LEAST 30 DAYS.

16. ALL MANHOLES MUST BE TESTED TO MEET OR EXCEED THE REQUIREMENTS OF 30 TAC §217.58.

(a) ALL MANHOLES MUST PASS A LEAKAGE TEST.

(b) AN OWNER SHALL TEST EACH MANHOLE (AFTER ASSEMBLY AND BACKFILLING) FOR LEAKAGE, SEPARATE AND INDEPENDENT OF THE COLLECTION SYSTEM PIPES, BY HYDROSTATIC EXFILTRATION TESTING, VACUUM TESTING, OR OTHER METHOD APPROVED BY THE EXECUTIVE DIRECTOR.

(1) HYDROSTATIC TESTING.

A. THE MAXIMUM LEAKAGE FOR HYDROSTATIC TESTING OR ANY ALTERNATIVE TEST METHODS IS 0.025 GALLONS PER FOOT DIAMETER PER FOOT OF MANHOLE DEPTH PER HOUR.

B. TO PERFORM A HYDROSTATIC EXFILTRATION TEST, AN OWNER SHALL SEAL ALL WASTEWATER PIPES COMING INTO A MANHOLE WITH AN INTERNAL PIPE PLUG, FILL THE MANHOLE WITH WATER, AND MAINTAIN THE TEST FOR AT LEAST ONE HOUR.

C. A TEST FOR CONCRETE MANHOLES MAY USE A 24-HOUR WETTING PERIOD BEFORE TESTING TO ALLOW SATURATION OF THE CONCRETE.

(2) VACUUM TESTING.

A. TO PERFORM A VACUUM TEST, AN OWNER SHALL PLUG ALL LIFT HOLES AND EXTERIOR JOINTS WITH A NON-SHRINK GROUT AND PLUG ALL PIPES ENTERING A MANHOLE.

B. NO GROUT MUST BE PLACED IN HORIZONTAL JOINTS BEFORE TESTING.

C. STUB-OUTS, MANHOLE BOOTS, AND PIPE PLUGS MUST BE SECURED TO PREVENT MOVEMENT WHILE A VACUUM IS DRAWN.

D. AN OWNER SHALL USE A MINIMUM 60 INCH/LB TORQUE WRENCH TO TIGHTEN THE EXTERNAL CLAMPS THAT SECURE A TEST COVER TO THE TOP OF A MANHOLE.

E. A TEST HEAD MUST BE PLACED AT THE INSIDE OF THE TOP OF A CONE SECTION, AND THE SEAL INFLATED IN ACCORDANCE WITH THE MANUFACTURER'S RECOMMENDATIONS.

F. THERE MUST BE A VACUUM OF 10 INCHES OF MERCURY INSIDE A MANHOLE TO PERFORM A VALID TEST.

G. A TEST DOES NOT BEGIN UNTIL AFTER THE VACUUM PUMP IS OFF.

H. A MANHOLE PASSES THE TEST IF AFTER 2.0 MINUTES AND WITH ALL VALVES CLOSED, THE VACUUM IS AT LEAST 9.0 INCHES OF MERCURY.

17. ALL PRIVATE SERVICE LATERALS MUST BE INSPECTED AND CERTIFIED IN ACCORDANCE WITH 30 TAC §213.5(C)(3)(I). AFTER INSTALLATION OF AND, PRIOR TO COVERING AND CONNECTING A PRIVATE SERVICE LATERAL TO AN EXISTING ORGANIZED SEWAGE COLLECTION SYSTEM, A TEXAS LICENSED PROFESSIONAL ENGINEER, TEXAS REGISTERED SANITARIAN, OR APPROPRIATE CITY INSPECTOR MUST VISUALLY INSPECT THE PRIVATE SERVICE LATERAL AND THE CONNECTION TO THE SEWAGE COLLECTION SYSTEM, AND CERTIFY THAT IT IS CONSTRUCTED IN CONFORMITY WITH THE APPLICABLE PROVISIONS OF THIS SECTION. THE OWNER OF THE COLLECTION SYSTEM MUST MAINTAIN SUCH CERTIFICATIONS FOR FIVE YEARS AND FORWARD COPIES TO THE APPROPRIATE REGIONAL OFFICE UPON REQUEST. CONNECTIONS MAY ONLY BE MADE TO AN APPROVED SEWAGE COLLECTION SYSTEM.

811 Know what's below. Call before you dig.

THE INFORMATION SHOWN ON THESE DRAWINGS INDICATING SIZE, TYPE AND LOCATION OF UNDERGROUND, SURFACE, AND AERIAL UTILITIES IS NOT GUARANTEED TO BE EXACT OR COMPLETE. THE CONTRACTOR SHALL CONTACT THE ROUND ROCK AREA "ONE CALL" SYSTEM AT 1-800-344-8377 (DIG TESS)48 HOURS PRIOR TO BEGINNING ANY EXCAVATION FOR EXISTING UTILITY LOCATIONS. THE CONTRACTOR SHALL ALSO BE FULLY RESPONSIBLE FOR FIELD VERIFYING LOCATIONS AND ELEVATIONS OF ALL EXISTING UTILITIES AFFECTED BY CONSTRUCTION FOR THIS PROJECT IN ORDER TO AVOID DAMAGING THOSE UTILITIES, AND SHALL IMMEDIATELY ARRANGE FOR REPAIR AND RESTORATION OF CONTRACTOR-DAMAGED UTILITIES TO THE UTILITY COMPANY'S APPROVAL AT THE EXPENSE OF THE CONTRACTOR.

WYOMING SPRINGS
SEGMENT 1
ROUND ROCK, TX

ROUND ROCK TEXAS

halff
13620 BRANTWICK DR
BLDG C, STE 100
AUSTIN, TX 78729
(512) 777-4800
TBPELS FIRM #312

Revision No.	Date	Description
.	.	.
.	.	.
.	.	.
.	.	.
.	.	.
.	.	.
.	.	.
.	.	.

STATE OF TEXAS
JEFFREY L. NAGY
133255
LICENSED
PROFESSIONAL ENGINEER
E-312 4/5/23

100% SUBMITTAL

Project No.:	36179.002
Issued:	4/14/2023
Drawn By:	SG
Checked By:	JN
Scale:	N.T.S

Sheet Title
GENERAL NOTES
(2 OF 2)

4
Sheet Number

USER: ...
DWG: ...
Plotted: 4/14/2023 3:11:47 PM By: aWright
Design: ...

ROADWAY

SHEET	ITEM CODE	CORR 101	TXDOT 260	TXDOT 260	TXDOT 247	TXDOT 110	TXDOT 132	CORR 306	TXDOT 341	TXDOT 341	TXDOT 529	TXDOT 531	TXDOT 531	TXDOT 528	TXDOT 536	TXDOT 531	XDOT 53	TXDOT 531	TXDOT 52	TXDOT 529	TXDOT 432	TXDOT 544	TXDOT 540	TXDOT 540	TXDOT 450	SS 1002	CORR 591	CORR 591
	ITEM DESCRIPTION	PREPARING ROW	LIME TREATMENT FOR MATERIALS IN PLACE (8-IN)	LIME (HYDRATED LIME (SLURRY))	FLEX BASE (13-IN)	EXCAVATION (RDWY)	EMBANKMENT (FINAL) (DENS CONT) (TY B)	PRIME COAT	HOT MIX ASPHALT D-GR TY-C PG 64-22 (2.5-IN)	HOT MIX ASPHALT D-GR TY-C PG 70-22 (2-IN)	P.C. CONCRETE CURB GUTTER	CONCRETE SIDEWALK (4-IN)	CONCRETE SIDEWALK (6-IN)	COLORED TEXTURED CONCRETE	P.C. CONCRETE MEDIANS AND ISLANDS	CURB RAMPS (TY 1)	CURB RAMPS (TY 5)	CURB RAMPS (TY 7)	CONC CURB (TY C1)	CONC CURB (TY F3)	MOW STRIP (4-IN)	GUARDRAIL END TREATMENT (INSTALL)	MTL W-BEAM GD FEN (TIM POST)	MTL BEAM GD FEN TRANS (TL2)	PEDESTRIAN HANDRAIL (TY C)	CORRIDOR FENCE	RIPRAP (STONE PROTECTION CLASS I, 6-IN D50) (THICKNESS = 12-IN)	RIPRAP (STONE PROTECTION CLASS III, 12-IN D50) (THICKNESS = 24-IN)
	LOCATION	STA	SY	TON	CY	CY	CY	GAL	TON	TON	LF	SY	SY	SY	SY	EA	EA	EA	LF	LF	CY	EA	LF	EA	LF	LF	CY	CY
WYOMING SPRINGS DR.																												
1	OF 12 BEGIN TO 114+00	2.30	2319	42	819	1452	80	375	258	207	928	394			78	2		2								200		
2	OF 12 114+00 TO 118+00	4.00	3083	56	1017	2230	396	439	302	242	1602	639			11											392		
3	OF 12 118+00 TO 122+00	4.00	3023	55	996	228	0	427	294	235	1600	707														566		
4	OF 12 122+00 TO 126+00	4.00	3342	61	1277	233	197	597	410	328	1428	703						2								699		
5	OF 12 126+00 TO 130+00	4.00	994	18	1052	752	4585	458	315	252	1602	719														598		
6	OF 12 130+00 TO 134+00	4.00	3023	55	996	4419	163	427	294	235	1602	877														749		
7	OF 12 134+00 TO 138+00	4.00	722	13	390	3508	2309	168	115	92	774	602	417	75	99				61	220		1	25	1	237	63	86	357
8	OF 12 138+00 TO 142+00	4.00	0	0	257	6	5408	111	76	61	535	247			60							1	25	1		45	702	181
9	OF 12 142+00 TO 146+00	4.00	1887	34	996	581	2123	427	294	235	1601	724			161											378		
10	OF 12 146+00 TO 150+00	4.00	3023	55	996	3955	330	427	294	235	1600	717														400		
11	OF 12 150+00 TO 154+00	4.00	352	7	367	251	3917	158	109	87	744	378									4	1	25	1		323		713
12	OF 12 154+00 TO END	3.34	1003	19	837	125	4377	376	259	207	1194	561					1	2			4	1	25	1				59
SAM BASS RD.																												
1 OF 6	BEGIN TO 37+00	1.4						15																				
2 OF 6	37+00 TO 41+00	4.0						105																				
3 OF 6	41+00 TO 45+00	4.0						248																				
4 OF 6	45+00 TO 49+00	4.0						265			50	21					1	2										
5 OF 6	49+00 TO 53+00	4.0						232																				
6 OF 6	53+00 TO 57+00	4.0						96																				
BRUSHY CREEK REGIONAL TRAIL SHARED USE PATH																												
PROJECT TOTALS		67.03	22771	415	10000	17741	23886	5351	3020	2416	15261	7289	417	75	409	2	2	8	61	220	8	4	100	4	237	4412	788	1310

ROADWAY

SHEET	ITEM CODE	TXDOT 432	TXDOT 247	TXDOT 341	TXDOT 341	TXDOT 347	TXDOT 530	TXDOT 530
	ITEM DESCRIPTION	CONCRETE RIPRAP	FL BS (CMP IN PLC) (TY A GR 5) (FINAL POS)	D-GR HMA (SQ)TY-B PG64-22	D-GR HMA (SQ)TY-D PG64-22	TOM(ASPHALT) PG70-22	DRIVEWAYS (ASPH)	DRIVEWAYS (CONC)
	LOCATION	CY	CY	TON	TON	TON	SY	SY
WYOMING SPRINGS DR.								
1	OF 12 BEGIN TO 114+00							
2	OF 12 114+00 TO 118+00							
3	OF 12 118+00 TO 122+00							
4	OF 12 122+00 TO 126+00							
5	OF 12 126+00 TO 130+00							
6	OF 12 130+00 TO 134+00							
7	OF 12 134+00 TO 138+00	47						
8	OF 12 138+00 TO 142+00							
9	OF 12 142+00 TO 146+00							
10	OF 12 146+00 TO 150+00							
11	OF 12 150+00 TO 154+00							62
12	OF 12 154+00 TO END							
SAM BASS RD.								
1 OF 6	BEGIN TO 37+00		25	14	10	49		
2 OF 6	37+00 TO 41+00		175	101	62	142		
3 OF 6	41+00 TO 45+00		413	239	142	181		
4 OF 6	45+00 TO 49+00		439	254	152	197		
5 OF 6	49+00 TO 53+00		387	224	135	167		135
6 OF 6	53+00 TO 57+00		159	91	58	230	73	
PROJECT TOTALS		47	1598	923	559	966	73	197

REMOVAL

SHEET	ITEM CODE	TXDOT 104	TXDOT 104	TXDOT 105	TXDOT 496	TXDOT 662	TXDOT 662	TXDOT 662	TXDOT 496	TXDOT 104	TXDOT 104	CORR 702
	ITEM DESCRIPTION	REMOVE CONCRETE (PAV)	REMOVE CONCRETE DRIVEWAYS	REMOVE ASPHALT PAVEMENT	REMOVE STR (PIPE)	REMOVE STRIPING	REMOVE ARROW	REMOVE WORD	ABANDONMENT OF WWMH	REMOVE SET	REMOVE CURB & GUTTTER	REMOVE FENCE
	LOCATION	SY	SY	SY	LF	LF	EA	EA	EA	CY	LF	LF
WYOMING SPRINGS DR.												
1	OF 7 BEGIN TO 114+00	68		321		692	4				214	
2	OF 7 114+00 TO 122+00											527
3	OF 7 122+00 TO 130+00	6		177							86	799
4	OF 6 130+00 TO 138+00	56		17	45				1	2		539
5	OF 7 138+00 TO 146+00											205
6	OF 7 146+00 TO 154+00											
7	OF 7 154+00 TO END	59									85	
SUBTOTAL		189	0	515	45	692	4		1	2	385	2070
SAM BASS RD.												
1	OF 5 34+00 TO 41+00			65		2182						
2	OF 5 41+00 TO 44+00		20	52		1069						
3	OF 5 44+00 TO 48+00		112	52	287	2234				1	82	
4	OF 5 48+00 TO 55+00		102	170	329	2944				4		
5	OF 5 55+00 TO END		106	183	27	2190	1	1				
PROJECT TOTALS		189	340	1037	688	11311	5	1		7	467	2070

UTILITIES

SHEET	ITEM CODE	CORR 506	CORR 510	CORR 509	CORR 510	CORR 510	CORR 505	CORR 510	CORR 511	CORR 511	CORR 511	CORR 510	CORR 511
	ITEM DESCRIPTION	MANHOLE ADJUSTMENT, 48" DIA.	30" DUCTILE IRON PIPE	TRENCH EXCAVATION SAFETY PROTECTIVE SYSTEMS	6" DUCTILE IRON PIPE	8" DUCTILE IRON PIPE	48" STEEL ENCASEMENT PIPE	DUCTILE IRON FITTINGS	IRON BODY GATE VALVE, 30" DIA.	IRON BODY GATE VALVE, 8" DIA.	IRON BODY GATE VALVE, 6" DIA.	WET CONNECTION (30IN)	FIRE HYDRANT ASSEMBLY
	LOCATION	EA	LF	LF	LF	LF	LF	TON	EA	EA	EA	EA	EA
WYOMING SPRINGS DR.													
WATERLINE A													
1	OF 2 BEGIN TO STA 5+00		400	400	10	36	20	3.42	1	1	1	1	1
2	OF 2 STA 5+00 TO END		370	370				0.55				1	
WASTEWATER LINE													
1	OF 5 BEGIN TO END	2											
2	OF 5 BEGIN TO END	2											
3	OF 5 BEGIN TO STA 5+00	2											
4	OF 5 STA 5+00 TO STA 8+00	1											
5	OF 5 STA 8+00 TO END	2											
PROJECT TOTALS		9	770	770	10	36	20	4	1	1	1	2	1

WYOMING SPRINGS
SEGMENT 1
ROUND ROCK, TX

ROUND ROCK TEXAS

halff
13620 BRANTWICK DR
BLDG C, STE 100
AUSTIN, TX 78729
(512) 777-4600
TBPELS FIRM #312

Revision No.	Date	Description

F-312 4/28/23
STATE OF TEXAS
JEFFREY L. NAGY
133255
LICENSED
PROFESSIONAL ENGINEER

100% SUBMITTAL

Project No.:	36179.002
Issued:	4/28/2023
Drawn By:	SG/MJ
Checked By:	JN
Scale:	N.T.S

Sheet Title
SUMMARY OF QUANTITIES (1 OF 3)

5
Sheet Number

USER:MJOU_DEVICE:LTR
PC:CAD03_PLOTSTYLE:Halff
Plotted: 4/28/2023 11:04:47 AM BY: MJOU XREFs: 0:\Halff\2023\036179.002\CAD\Sheets\ATS\36179.002 GTY-1.dgn

DRAINAGE																																								
SHEET			ITEM CODE			CORR 506	CORR 506	CORR 506	TXDOT 465	TXDOT 465	TXDOT 465	TXDOT 465	CORR 508	CORR 508	CORR 508	CORR 508	CORR 508	CORR 508	CORR 508	CORR 508	TXDOT 467	CORR 509	CORR 510	CORR 510	CORR 510	CORR 510	CORR 510	CORR 559	CORR 551	TXDOT 432	TXDOT 432	TXDOT 432	TXDOT 432	TXDOT 432		
			ITEM DESCRIPTION			STANDARD PRE-CAST MANHOLE W/ PRE-CAST BASE, 4' DIA	STANDARD PRE-CAST MANHOLE W/ PRE-CAST BASE, 5' DIA	STANDARD PRE-CAST MANHOLE W/ PRE-CAST BASE, 6' DIA	TXDOT PCO 15' CURB INLET	TXDOT PCO 10' CURB INLET	AREA ZONE DRAIN (4'X4')	PSL FG 3'x3' (GRATE INLET)	WINGWALL (FW - S) (HW=4 FT)	HEADWALL (CH-FW-0) (DIA = 30IN)	HEADWALL (CH-FW-0) (DIA = 24IN)	HEADWALL (CH-FW-0) (DIA = 18IN)	SET (TY II) (18-IN) (RCP) (6:1) (P)	SET (TY II) (24-IN) (RCP) (6:1) (P)	SET (TY II) (30-IN) (RCP) (4:1) (C)	SET (TY II) (36-IN) (RCP) (3:1) (C)	SET (TY II) (18 IN) (RCP) (3:1) (P)	TRENCH EXCAVATION SAFETY PROTECTIVE SYSTEMS	RC PIPE (CL III) (15-IN) (ALL DEPTHS), INCLUDING EXCAVATION AND	RC PIPE (CL III) (24-IN) (ALL DEPTHS), INCLUDING EXCAVATION AND BACKFILL	RC PIPE (CL III) (30-IN) (ALL DEPTHS), INCLUDING EXCAVATION AND BACKFILL	RC PIPE (CL V) (30-IN) (ALL DEPTHS), INCLUDING EXCAVATION AND BACKFILL	RC PIPE (CL III) (36-IN) (ALL DEPTHS), INCLUDING EXCAVATION AND BACKFILL	CONC BOX CULV (8 FT X 4 FT)	PAVEMENT UNDERDRAIN (TY 7)	RIPRAP (CONC) (4IN) (FLUME)	RIPRAP (STONE COMMON) (DRY) (6 IN)	RIPRAP (STONE PROTECTION) (18 IN)	RIPRAP (STONE PROTECTION) (GROUT) (12 IN)	RIPRAP (STONE PROTECTION) (12 IN)	SWAQ-40-BYPASS STORMTROOPER	SWAQ-110-BYPASS STORMTROOPER
			LOCATION			EA	EA	EA	EA	EA	EA	EA	EA	EA	EA	EA	EA	EA	EA	EA	EA	LF	LF	LF	LF	LF	LF	LF	LF	CY	CY	CY	CY	CY	EA	EA
WYOMING SPRINGS DR.																																								
			STORM LINE A																																						
1	OF	8	BEGIN	TO	5+00				2													629	629																
2	OF	8	5+00	TO	9+00	1			2													699	598	101															
3	OF	8	9+00	TO	END	1	1		3													693	298	395													1	1
			STORM LINE B																																						
4	OF	8	BEGIN	TO	END	1			6	2												183	575	48													2	1
			STORM LINE C																																						
5	OF	8	BEGIN	TO	5+00		2															168		168										16					
6	OF	8	5+00	TO	END				6					1								547	246	60	241												2	
			STORM LINE D																																						
7	OF	8	BEGIN	TO	END	1			4	1					1							425	340	85								30		16		1	1	
			STORM LINE E																																						
8	OF	8	BEGIN	TO	END	3			4		1					1						442	442												8			1	
			WYOMING SPRINGS CULVERT																																						
1	OF	1		TO	END								2								2	142						709						257	69			
			BCRT LINE																																						
1	OF	1	BEGIN	TO	END	1					1					1							72																
						8	3	0	27	3	2		2	1	1	2						3928	3200	857	241				709			30	0		77	4	8	
SAM BASS RD.																																								
1	OF	3	BEGIN	TO	STA 45+00																								300	68									
2	OF	3	STA 45+00		STA 53+00			1				2					4	2	1	1			89	126			76	152			66								
3	OF	3	STA 53+00	TO	END		1													1		186					259		300	3								
PROJECT TOTALS						7	4	1	27	3	1	2	2	2	2	4	4	2	1	2	2	4114	3217	983	241	76	411	709	600	137	60	0	289		8	16		

TREE REMOVAL & PROTECTION							
SHEET			ITEM CODE			CORR 610	CORR 610	CORR 623
			ITEM DESCRIPTION			REMOVAL OF EXISTING TREES	TREE PROTECTION	DRY STACK ROCK WALL (TREE WELLS)
			LOCATION			EA	EA	SF
WYOMING SPRINGS DR.								
1	OF	19	BEGIN	TO	114+00			
2	OF	19	114+00	TO	118+00	5	2	
3	OF	19	118+00	TO	122+00	2	2	50
4	OF	19	122+00	TO	126+00	15	2	
5	OF	19	126+00	TO	130+00	19	20	57
6	OF	19	130+00	TO	134+00	4	19	299
7	OF	19	134+00	TO	138+00	9	26	
8	OF	19	138+00	TO	142+00	33	30	
9	OF	19	142+00	TO	146+00	32	19	305
10	OF	19	146+00	TO	150+00	12	14	
11	OF	19	150+00	TO	154+00	17	5	
12	OF	19	154+00	TO	END	24	4	
HAIRY MAN RD.								
13	OF	19	BEGIN	TO	END	2	15	
SAM BASS RD.								
14	OF	19	BEGIN	TO	36+00			
15	OF	19	36+00	TO	40+00		13	
16	OF	19	40+00	TO	44+00	2	3	
17	OF	19	44+00	TO	48+00	1	4	
18	OF	19	48+00	TO	56+00		12	
19	OF	19	56+00	TO	END		6	
PROJECT TOTALS						177	196	711

ILLUMINATION POLES									
SHEET			ITEM CODE			TXDOT 610	TXDOT 416	TXDOT 618	TXDOT 609
			ITEM DESCRIPTION			INSTALL ROADWAY ILLUM ASSEMBLY (LED)	DRILLED SHAFT FOUNDATION	CONDT (PVC) (SCH 40) (2")	PULL BOX
			LOCATION			EA	LF	LF	EA
1	OF	12	BEGIN	TO	114+00	1	8	222	2
2	OF	12	114+00	TO	118+00	3	24	399	3
3	OF	12	118+00	TO	122+00	3	24	397	3
4	OF	12	122+00	TO	126+00	3	24	393	3
5	OF	12	126+00	TO	130+00	2	16	400	2
6	OF	12	130+00	TO	134+00	3	24	399	3
7	OF	12	134+00	TO	138+00	4	16	160	2
8	OF	12	138+00	TO	142+00	6	8	90	1
9	OF	12	142+00	TO	146+00	3	24	404	3
10	OF	12	146+00	TO	150+00	3	24	397	3
11	OF	12	150+00	TO	154+00	6	16	202	3
12	OF	12	154+00	TO	END	3	24	383	4
PROJECT TOTALS						40	232	3846	32

PAVEMENT MARKINGS																					
SHEET			ITEM CODE			TXDOT 644	TXDOT 666	TXDOT 666	TXDOT 666	TXDOT 666	TXDOT 666	TXDOT 666	TXDOT 666	TXDOT 666	TXDOT 666	TXDOT 672	TXDOT 672	TXDOT 658	TXDOT 560
			ITEM DESCRIPTION			SMALL ROADSIDE SIGN ASSEMBLIES	REFL PAV MRK TY I (W) 4" (BRK)	REFL PAV MRK TY I (W) 4" (SLD) (100MIL)	REFL PAV MRK TY I (W) 8" (SLD)	REFL PAV MRK TY I (W) 12" (SLD)	REFL PAV MRK TY I (W) 24" (SLD)	REFL PAV MRK TY I (Y) 4" (SLD)	REFL PAV MRK TYP I (W) (DOT)(4")	REFL PAV MRK TY I (W) (ARROW)	REFL PAV MRK TY I (W) (WORD)	REFL PAV MRK TY I-C RAISED MARKERS	REFL PAV MRK TY I-C RAISED MARKERS	INSTL OM ASSM (OM-2Z) (FLX)GND	RELOCATE EXISTING MAILBOX
			LOCATION			EA	LF	LF	LF	LF	LF	LF	LF	EA	EA	EA		EA	EA
WYOMING SPRINGS DR.																					
1	OF	7	BEGIN	TO	114+00	9	107		668	184	101		175	10	5	11	16		
2	OF	7	114+00	TO	122+00	0	401			159	59	120		3	1	41	9		
3	OF	7	122+00	TO	130+00	2	400		161							40			
4	OF	7	130+00	TO	138+00	2	381									39			
5	OF	7	138+00	TO	146+00	2	401									41			
6	OF	7	146+00	TO	154+00	2	400									40			
7	OF	7	154+00	TO	END	3	147		179	154	77	150		4	1	15	9		
SAM BASS RD																					
1 OF 3			BEGIN TO 41+00			1	1128	1069				2160				15	100		
2 OF 3			41+00 to 49+00			9	1475	1319	1254	491	134	2041		6	6	19	96	0	1
3 OF 3			49+00 to END			3	1172	1775	291			4584		2	2	15	181	1	1
PROJECT TOTALS						33	6012	4163	2553	988	371	9055	175	25	15	276	411	1	2

WYOMING SPRINGS
SEGMENT 1
ROUND ROCK, TX

ROUND ROCK TEXAS

halff
13620 BRANTWICK DR
BLDG C, STE 100
AUSTIN, TX 78729
(512) 777-4600
TBPELS FIRM #312

Revision No.	Date	Description

F-312 STATE OF TEXAS JEFFREY L NAGY 133255 LICENSED PROFESSIONAL ENGINEER 4/28/23 WLS-23

100% SUBMITTAL

Project No.:	36179.002
Issued:	4/28/2023
Drawn By:	SG/MJ
Checked By:	JN
Scale:	N.T.S

Sheet Title
SUMMARY OF QUANTITIES (2 OF 3)

6
Sheet Number

User: JNAPIER@HALFF.COM
J:\HALFF_JOBS\36179.002\CIVIL\SHEETS\36179.002 SHEET LIST.DWG
Date: 4/28/2023 11:39:48 AM
Plotted By: JNAPIER
Plot Date: 4/28/2023

EROSION CONTROL													
SHEET			ITEM CODE			TXDOT 164	CORR 610	CORR 623	TXDOT 506	TXDOT 506	TXDOT 506	TXDOT 506	CORR SS	TXDOT 460
			ITEM DESCRIPTION			NATIVE GRASSLAND SEEDING AND PLANTING	TREE PROTECTION	DRY STACK ROCK WALL (TREE WELLS)	ROCK BERM	STABILIZED CONSTRUCTION ENTRANCE	SILT FENCE	INLET PROTECTION	CARE OF WATER	TEMPORARY 48" CMP PIPE
			LOCATION			SY	EA	SF	LF	SY	LF	EA	LS	LF
WYOMING SPRINGS DR.														
1	OF	2	BEGIN	TO	134+00	2776					386	1		
2	OF	2	134+00	TO	END	9843				111	724			
1	OF	7	110+00	TO	118+00	2693	2			111	789			
2	OF	7	118+00	TO	126+00	2062	3	53			1539			
3	OF	7	126+00	TO	130+00	3586	21	57	80		703			
4	OF	7	130+00	TO	138+00	4885	29	299	20		1520			
5	OF	7	138+00	TO	146+00	9354	49	380						
6	OF	7	146+00	TO	154+00	6019	19	434	20		328		1	
7	OF	7	154+00	TO	159+00	478	4	305	20		158			100
HAIRY MAN RD.														
7	OF	7	BEGIN	TO	END	1017	30				520			
SAM BASS RD.														
1 OF 3			BEGIN TO 41+00			1745	16							
2 OF 3			41+00 TO 49+00			2740	9		60		361	3		
3 OF 3			49+00 TO END			2265	9		40		723			
PROJECT TOTALS						49463	191	1528	240	222	7751	4	1	100

SUMMARY OF TRAFFIC CONTROL PLAN												
SHEETNO.	STA RANGE			4006008	5026001	6626004	6626032	6626034	6626016	6626017	40276001	681
				CUT & RESTORING PAV (ASPH)	BARRICADES, SIGNS, AND TRAFFIC HANDLING	WK ZN PAVMRK NON-REMOV (W) 4" (SLD)	WK ZN PAVMRK NON-REMOV (W) 4" (DOT)	WK ZN PAVMRK NON-REMOV (Y) 4" (SLD)	WK ZN PAVMRK NON-REMOV (W) 24" (SLD)	WK ZN PAVMRK NON-REMOV (W)(ARROW)	TEMP ACCESS (DRIVEWAY)	TEMP TRAFFIC SIGNALS
				SY	MO	LF	LF	LF	LF	EA	LS	EA
SAM BASS RD & HAIRY MAN RD												
	BEGIN	TO	END	36	15	4,500	120	5,270	40	4	1	1

WYOMING SPRINGS
SEGMENT 1
ROUND ROCK, TX

ROUND ROCK TEXAS

halff
13620 BRANTWICK DR
BLDG C, STE 100
AUSTIN, TX 78729
(512) 777-4600
TBPELS FIRM #312

Revision		
No.	Date	Description
.	.	.
.	.	.
.	.	.
.	.	.
.	.	.
.	.	.
.	.	.
.	.	.

F-312 4/5/23
STATE OF TEXAS
JEFFREY L. NAGY
133255
LICENSED
PROFESSIONAL ENGINEER

100% SUBMITTAL

Project No.:	36179.002
Issued:	4/28/2023
Drawn By:	SG/MJ
Checked By:	JN
Scale:	N.T.S

Sheet Title
SUMMARY OF QUANTITIES (3 OF 3)

7
Sheet Number

4/28/2023 1:33:59 AM ahil914 HALFF
Plotted By: ahil914 on 4/28/2023 1:33:59 AM
File: P:\Projects\36000\36179\002\CAD\Sheets\ASI\36179.002 QTY-3.dgn
Last Saved By: ahil914 on 4/28/2023 1:33:59 AM

PROPOSED SIGNAL SUMMARY

ITEM NO.	DESCRIPTION	UNIT	QUANTITY
416 6032	DRILL SHAFT (TRF SIG POLE) (36 IN)	LF	42
618 6053	CONDT (PVC) (SCH 80) (3")	LF	1013
618 6054	CONDT (PVC) (SCH 80) (3") (BORE)	LF	684
620 6007	ELEC CONDR (NO.8) BARE	LF	1148
620 6008	ELEC CONDR (NO.8) INSULATED	LF	2904
624 6010	GROUND BOX TY D (162922)W/APRON	EA	3
636 6003	ALUMINUM SIGNS (TY O)	SF	96
680 6011	INSTALL HWY TRF SIG (UPGRADE)	EA	2
682 6001	VEH SIG SEC (12")LED(GRN)	EA	9
682 6002	VEH SIG SEC (12")LED(GRN ARW)	EA	9
682 6003	VEH SIG SEC (12")LED(YEL)	EA	11
682 6004	VEH SIG SEC (12")LED(YEL ARW)	EA	15
682 6005	VEH SIG SEC (12")LED(RED)	EA	11
682 6006	VEH SIG SEC (12")LED(RED ARW)	EA	6
682 6018	PED SIG SEC (LED) (COUNTDOWN)	EA	6
682 6023	BACK PLATE (12") (3 SEC)	EA	8
682 6024	BACK PLATE (12") (4 SEC)	EA	6
682 6025	BACK PLATE (12") (5 SEC)	EA	3
684 6008	TRF SIG CBL (TY A) (12 AWG) (3 CONDR)	LF	1468
684 6010	TRF SIG CBL (TY A) (12 AWG) (5 CONDR)	LF	1288
684 6028	TRF SIG CBL (TY A) (14 AWG) (2 CONDR)	LF	100
684 6031	TRF SIG CBL (TY A) (14 AWG) (5 CONDR)	LF	545
684 6033	TRF SIG CBL (TY A) (14 AWG) (7 CONDR)	LF	380
684 6046	TRF SIG CBL (TY A) (14 AWG) (20 CONDR)	LF	1216
686 6048	INS TRF SIG PL AM(S)1 ARM(44')LUM&ILSN	EA	2
686 6049	INS TRF SIG PL AM(S)1 ARM(48')	EA	1
686 6052	INS TRF SIG PL AM(S)1 ARM(48')LUM&ILSN	EA	1
687 6001	PED POLE ASSEMBLY	EA	3
688 6001	PED DETECT PUSH BUTTON (APS)	EA	6
688 6003	PED DETECTOR CONTROLLER UNIT	EA	1
6004 6031	ITS COM CBL (ETHERNET)	LF	188
6090 6002	ILSN (LED) (8 D)	EA	1
6090 6005	ILSN (LED) (10 D)	EA	2
6306 6001	VIVDS PROSR SYS (ITERIS VANTAGE NEXT PLATFORM)	EA	2
6306 6003	VIVDS CAM ASSY VAR LNS (ITERIS VANTAGE VECTOR WITH VANTAGE NEXT)	EA	4
6306 6003	VIVDS CAM ASSY VAR LNS (ITERIS VANTAGE NEXT)	EA	4
6306 6005	VIVDS CNTRL SOFTWARE (ITERIS)	EA	2
6306 6007	VIVDS CABLING	LF	2099
6423 6002*	FIELD HARDENED ETHERNET SWITCHES	EA	2
SS-01*	OPTICOM PREEMPTION DETECTOR (GTT MODEL 722)	EA	5
SS-02*	OPTICOM PREEMPTION DETECTOR CABLE (GTT MODEL 138)	LF	1386
SS-03*	OPTICOM PHASE SELECTOR (GTT MODEL 764)	EA	2
SS-04*	OPTICOM CARD RACK (GTT MODEL 760)	EA	2
SS-05*	PEGASUS TWISTPORT 5.8 GHZ WIRELESS ETHERNET RADIO	EA	2
SS-06*	AXIS P5655-E PTZ CAMERA	EA	2

* = SUBSIDIARY TO ITEM 680 6011

PROPOSED TRAFFIC SIGNAL GENERAL NOTES

TRAFFIC SIGNAL INSTALLATION NOTES:

1. EXACT LOCATION OF POLES, CONTROLLER, SIGNAL HEADS, GROUND BOXES, ANTENNAS, OPTICOM DETECTORS, AND VIVDS CAMERAS SHALL BE DETERMINED IN THE FIELD AND SUBJECT TO FINAL APPROVAL BY ENGINEER IN THE FIELD. IT IS THE CONTRACTORS'S RESPONSIBILITY TO VERIFY THE EXACT LOCATIONS FROM THE ENGINEER, PRIOR TO CONSTRUCTION.

2. ALL CONDUITS UNDER PAVED SHOULDERS OR NATURAL GROUND SHALL BE TRENCHED AND BURIED A MINIMUM OF 18 INCHES, AS PER TXDOT STANDARD ED(8)–14, EXCEPT WHERE NOTED OTHERWISE IN PLANS. THE CONTRACTOR SHALL BACKFILL, COMPACT, AND RESTORE THE TRENCHED AREA TO ORIGINAL CONDITIONS AND MATCH EXISTING SURFACE CONDITIONS TO THE DENSITY OF ADJACENT AREA.

3. ALL CONDUIT UNDER ROADWAYS SHALL BE BORED, UNLESS SPECIFICALLY NOTED OTHERWISE. ENCASE ALL BORED CONDUITS WITH MINIMUM 2" THICK PRESSURE GROUTED FLOWABE FILL CEMENT. CONSIDER SUBSIDIARY TO ITEM 618.

4. ALL NEW INFRASTRUCTURE SHALL TRAVERSE UNDERNEATH CITY INFRASTRUCTURE. THIS INCLUDES, BUT IS NOT LIMITED TO WATER LINES, WASTE WATER LINES, AND STORM SEWER WITH A MINIMUM OUTSIDE TO OUTSIDE CLEARANCE OF 18 INCHES. TRAVERSING ABOVE CITY INFRASTRUCTURE MAY BE ALLOWED, SUBJECT TO THE APPROVAL OF THE CITY ENGINEER, WHERE NEW CONDUIT WOULD HAVE TO BE PLACED AT A DEPTH OF 8 FEET OR GREATER.

5. ALL POLES SHALL BE GROUNDED. ALL ELECTRICAL GROUND BOXES AND GROUND BOX COVERS SHALL BE CONSTRUCTED ON REINFORCED POLYMER CONCRETE.

6. ALL SIGNAL HEADS SHALL HAVE BACKPLATES AND 12–INCH LED INDICATIONS.

7. SIGNAL HEADS SHALL NOT BE PLACED OVER THE ROADWAY UNTIL ALL NECESSARY MATERIALS ARE AT HAND AS APPROVED BY THE ENGINEER IN THE FIELD.

8. ALL PROPOSED LUMINAIRES SHALL BE LED. LUMINAIRES SHALL BE INSTALLED TOWARDS THE ADJACENT STOP BAR UNLESS SPECIFIED OTHERWISE.

9. NEW SIMENS EPAC M60 LINUX WITH 4.57o FIRMWARE T–2 TY 2 CONTROLLER WITH ETHERNET AND USB DATA PORT SHALL BE PLACED AS SHOWN IN THE PROPOSED LAYOUT IN A SIZE P 16 POSITION BASED MOUNT CABINET. THE CONTRACTOR SHALL PROVIDE THE LATEST FIRMWARE BEING USED BY THE CITY OF ROUND ROCK.

10. ALL MMU SHALL SUPPORT THE FLASHING YELLOW ARROW OPERATION. EDI MMU2 16 IP.

11. ONE (1) GLOBAL TRAFFIC TECHNOLOGIES (GTT) MODEL 760 CARD RACK SHALL BE INSTALLED IN THE CONTROLLER CABINET AS SHOWN IN THE PLANS. ONE (1) GTT MODEL 764 OPTICOM PHASE SELECTOR SHALL BE INSTALLED AS SHOWN IN PLANS. GTT MODEL 722 OPTICOM DETECTORS SHALL BE INSTALLED AS SHOWN IN THE PLANS. GTT MODEL 138 DETECTOR CABLE OR EQUIPVALENT SHALL BE USED FOR CONNECTION OF ALL EMERGENCY PREEMPTION EQUIPMENT. ALL EMERGENCY PREEMPTION EQUIPMENT SHALL BE CAMPATIBLE WITH EXISTING CITY OF ROUND ROCK EMERGENCY PREEMPTION TRANSMITTERS.

12. ALL CONDUIT SHALL BE SCHEDULE 80.

13. PAVEMENT MARKINGS SHALL BE INSTALLED AS PER TXDOT STANDARD SHEETS PM(1)–20.

14. CONTRACTOR SHALL HAVE QUALIFIED PERSONNEL TO ENSURE CORRECT WIRING AND PROGRAMMING IN THE CABINET TO ALL SIGNAL PHASES & OVERLAPS.

15. ALL PEDESTRIAN SIGNAL UNITS SHALL BE POLARA NAVIGATOR ACCESSIBLE PEDESTRIAN SIGNAL (APS) UNITS WITH AUDIBLE PUSH–BUTTON AND LED COUNTDOWN HEADS.

16. THE CONTRACTOR SHALL FURNISH AND INSTALL ONE (1) TITAN INTEGRATED DUALBAND (2.4/5.8 GHZ) WIRELESS RADIO (OR APPROVED EQUIPMENT) AND CAT 5 ETHERNET CABLE AS SHOWN IN THE PLANS. RADIO MUST BE COMPATIBLE WITH EXISTING COMMUNICATIONS EQUIPMENT IN USE BY THE CITY OF ROUND ROCK.

17. THE CONTRACTOR SHALL PROVIDE COMNET ETHERNET SWITCH (MANAGED) (PART NO. CNGE 3FE7MS2).

18. THE CONTRACTOR SHALL FURNISH AND INSTALL THE BATTERY BACK–UP (BBU) SYSTEM PRIOR TO SIGNAL TURN ON.

19. THE CONTRACTOR SHALL FURNISH AND INSTALL AN ITERIS EDGE CONNECT CARD FOR VIVDS.

20. THE CONTRACTOR TO PROVIDE AXIS NETWORK CAMERA P5655–E PTZ W/ POLE MOUNT BRACKET AND INSTALL.

21. THE CONTRACTOR TO PROVIDE AND INSTALL CAT 6 OUTDOOR CABLE FOR AXIS NETWORK CAMERA.

22. CONTACT CITY OF ROUND ROCK SIGNAL DEPARTMENT WITH 2 WEEKS NOTICE PRIOR TO CONSTRUCTION.

WYOMING SPRINGS
SEGMENT 1
ROUND ROCK, TX

ROUND ROCK TEXAS

BGE Inc.
7330 San Pedro, Suite 202, San Antonio, TX 78216
Tel: 210-581-3600 • www.bgeinc.com
TBPE Registration No. F-1046

Revision No.	Date	Description

4/5/2023

STATE OF TEXAS
SHAUN E. SPIVEY
114567
LICENSED
PROFESSIONAL ENGINEER

Project No.:	
Issued:	
Drawn By:	
Checked By:	
Scale:	
Sheet Title	SIGNAL SUMMARY OF QUANTITIES
Sheet Number	8

SUMMARY OF SMALL SIGNS

PLAN SHEET NO.	SIGN NO.	SIGN NOMENCLATURE	SIGN	DIMENSIONS	FLAT ALUMINUM (TYPE A)	EXAL ALUMINUM (TYPE G)	SM RD SGN ASSM TY XXXXX (X) XX (X-XXXX) POST TYPE: FRP = Fiberglass, TWT = Thin-Wall, 10BWG = 10 BWG, S80 = Sch 80	POSTS: 1 or 2	ANCHOR TYPE: UA=Universal Conc, UB=Universal Bolt, SA=Slipbase-Conc, SB=Slipbase-Bolt, WS=Wedge Steel, WP=Wedge Plastic	MOUNTING DESIGNATION: PREFABRICATED: P = "Plain", T = "T", U = "U"	MOUNTING DESIGNATION: 1EXT or 2EXT = # of Ext, BM = Extruded Wind Beam, WC = 1.12 #/ft Wing Channel, EXAL= Extruded Alum Sign Panels	BRIDGE MOUNT CLEARANCE SIGNS (See Note 2) TY = TYPE: TY N, TY S
356	1	R10-15R	TURNING VEHICLES YIELD (RIGHT)	30" X 30"	X		10 BWG	1	SB	P		
356	2	R3-8b	LEFT STRAIGHT RIGHT	48" X 30"	X		10 BWG	1	SB	T		
356	3	R10-15R	TURNING VEHICLES YIELD (RIGHT)	30" X 30"	X		10 BWG	1	SB	P		
356	4	R3-8LSSR	LEFT/ STRAIGHT/ STRAIGHT/ RIGHT	48" X 30"	X		10 BWG	1	SB	T		
356	5	R10-15R	TURNING VEHICLES YIELD (RIGHT)	30" X 30"	X		10 BWG	1	SB	P		
356	6	R3-8LLSR	LEFT/ LEFT/ STRAIGHT RIGHT	48" X 30"	X		10 BWG	1	SB	T		
356	7	R10-15R	TURNING VEHICLES YIELD (RIGHT)	30" X 30"	X		10 BWG	1	SB	P		
356	8	R3-8LSSR	LEFT/ LEFT STRAIGHT/ STRAIGHT RIGHT	66" X 30"	X		10 BWG	1	SB	T		
356	9	R3-7R	RIGHT LANE MUST TURN RIGHT	30" X 30"	X		10 BWG	1	SB	P		
356	10	S4-5	SCHOOL SPEED ZONE AHEAD	36" X 36"	X		10 BWG	1	SB	P		
356	11	R2-1	SPEED LIMIT 45	24" X 30"	X		10 BWG	1	SB	P		
357	12	R3-5L	LEFT TURN ONLY	30" X 36"	X		10 BWG	1	SB	P		
357	13	R3-5R	RIGHT TURN ONLY	30" X 36"	X		10 BWG	1	SB	P		
357	14	R2-1	SPEED LIMIT 40	24" X 30"	X		10 BWG	1	SB	P		
358	15	R3-4	NO U-TURN	30" X 30"	X		10 BWG	1	SB	P		
358	16	R3-4	NO U-TURN	30" X 30"	X		10 BWG	1	SB	P		
358	17	R1-1	STOP	36" X 36"	X		10 BWG	1	SB	P		
358	18	M4-12T	WYOMING SPRINGS DR	48" X 8"	X		10 BWG	1	SB	P		
358	19	R3-5L	LEFT TURN ONLY	30" X 36"	X		10 BWG	1	SB	P		
359	20	W8-13aT	BRIDGE MAY ICE IN COLD WEATHER	36" X 36"	X		10 BWG	1	SB	P		
359	21	I-3	BRUSHY CREEK	24" X 18"	X		10 BWG	1	SB	P		
360	22	I-3	BRUSHY CREEK	24" X 18"	X		10 BWG	1	SB	P		
360	23	W8-13aT	BRIDGE MAY ICE IN COLD WEATHER	36" X 36"	X		10 BWG	1	SB	P		
360	24	W8-13aT	BRIDGE MAY ICE IN COLD WEATHER	36" X 36"	X		10 BWG	1	SB	P		
360	25	I-3	DRY FORK CREEK	28" X 18"	X		10 BWG	1	SB	P		
361	26	I-3	DRY FORK CREEK	28" X 18"	X		10 BWG	1	SB	P		
361	27	R3-5L	SPEED LIMIT 45	24" X 30"	X		10 BWG	1	SB	P		
361	28	W8-13aT	BRIDGE MAY ICE IN COLD WEATHER	36" X 36"	X		10 BWG	1	SB	P		
361	29	R3-8LSSR	LEFT/ STRAIGHT/ STRAIGHT RIGHT	48" X 30"	X		10 BWG	1	SB	T		
361	30	R2-1	SPEED LIMIT 40	24" X 30"	X		10 BWG	1	SB	T		
361	31	R3-5L	LEFT TURN ONLY	30" X 36"	X		10 BWG	1	SB	P		
362	32	D14-4T	ADOPT A HIGHWAY	48" X 48"	X		10 BWG	1	SB	T		
362	33	D3-2	WYOMING SPRINGS DR NEXT SIGNAL	48" X 48"	X		10 BWG	1	SB	T		
364	34	R3-5R	RIGHT TURN ONLY	30" X 36"	X		10 BWG	1	SB	P		
364	35	R2-1	SPEED LIMIT 50	30" X 36"	X		10 BWG	1	SB	P		
364	36	I-2aT	ROUND ROCK CITY LIMIT POP.	24" X 18"	X		10 BWG	1	SB	P		
364	37	R3-LSSR	LEFT STRAIGHT STRAIGHT RIGHT	60" X 30"	X		S80	1	SB	U		
364	38	R3-LSSR	LEFT STRAIGHT STRAIGHT RIGHT	60" X 30"	X		S80	1	SB	U		
364	39	W1-4L	REVERSE CURVE	36" X 36"	X		10 BWG	1	SB	P		
364	40	R3-5R	RIGHT TURN ONLY	30" X 36"	X		10 BWG	1	SB	P		
364	41		EMERGENCY VEHICLE EXIT DO NOT BLOCK									
364	42		EMERGENCY VEHICLE EXIT DO NOT BLOCK									
365	43	R5-4aT	NO ENGINE BRAKE BY CITY ORDINACE	24" X 30"	X		10 BWG	1	SB	P		
365	44	D20-1TR	COUNTY ROAD (175)	24" X 24"	X		10 BWG	1	SB	P		
365	45	R3-5R	RIGHT TURN ONLY	30" X 36"	X		10 BWG	1	SB	P		
365		R3-5R	RIGHT TURN ONLY	30" X 36"	X		10 BWG	1	SB	P		

DISCLAIMER:
The use of this standard is governed by the "Texas Engineering Practice Act". No warranty of any kind is made by TxDOT for any purpose whatsoever. TxDOT assumes no responsibility for the conversion of this standard to other formats or for incorrect results or damages resulting from its use.

DATE:
FILE:
DATE TIME
DOCUMENT NAME

ALUMINUM SIGN BLANKS THICKNESS	
Square Feet	Minimum Thickness
Less than 7.5	0.080"
7.5 to 15	0.100"
Greater than 15	0.125"

The Standard Highway Sign Designs for Texas (SHSD) can be found at the following website.

http://www.txdot.gov/

NOTE:

1. Sign supports shall be located as shown on the plans, except that the Engineer may shift the sign supports, within design guidelines, where necessary to secure a more desirable location or to avoid conflict with utilities. Unless otherwise shown on the plans, the Contractor shall stake and the Engineer will verify all sign support locations.
2. For installation of bridge mount clearance signs, see Bridge Mounted Clearance Sign Assembly (BMCS)Standard Sheet.
3. For Sign Support Descriptive Codes, see Sign Mounting Details Small Roadside Signs General Notes & Details SMD(GEN).

Texas Department of Transportation

Traffic Operations Division Standard

SUMMARY OF SMALL SIGNS

SOSS

FILE:	sums16.dgn	DN: TxDOT	CK: TxDOT	DW: TxDOT	CK: TxDOT
©TxDOT	May 1987	CONT	SECT	JOB	HIGHWAY
REVISIONS		C	S	J	HWY
4-16		DIST	COUNTY		SHEET NO.
8-16		DST	CTY		9

18

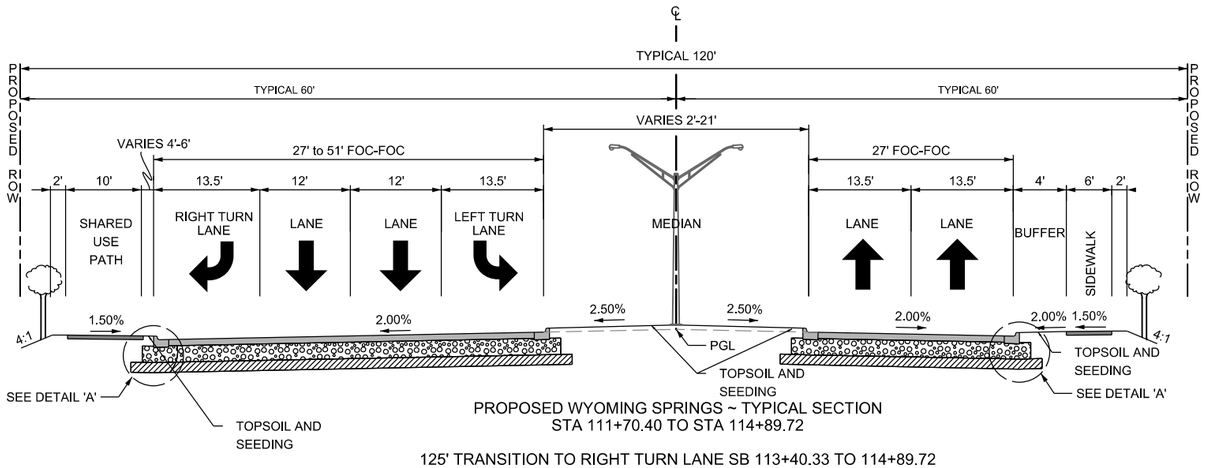

PROPOSED WYOMING SPRINGS ~ TYPICAL SECTION
STA 111+70.40 TO STA 114+89.72

125' TRANSITION TO RIGHT TURN LANE SB 113+40.33 TO 114+89.72
140' TRANSITION TO LEFT TURN LANE SB 113+49.27 TO 114+89.72

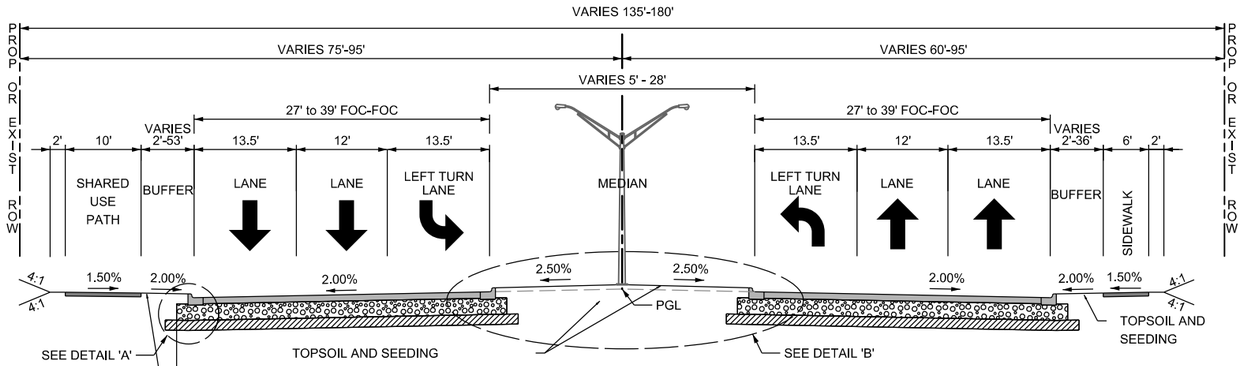

PROPOSED WYOMING SPRINGS ~ TYPICAL SECTION
STA 122+06.39 TO STA 127+80.62

218' TRANSITION TO LEFT TURN LANE NB STA 122+06.36 TO STA 124+19.46
221' TRANSITION TO LEFT TURN LANE SB STA 125+67.23 TO STA 127+80.62

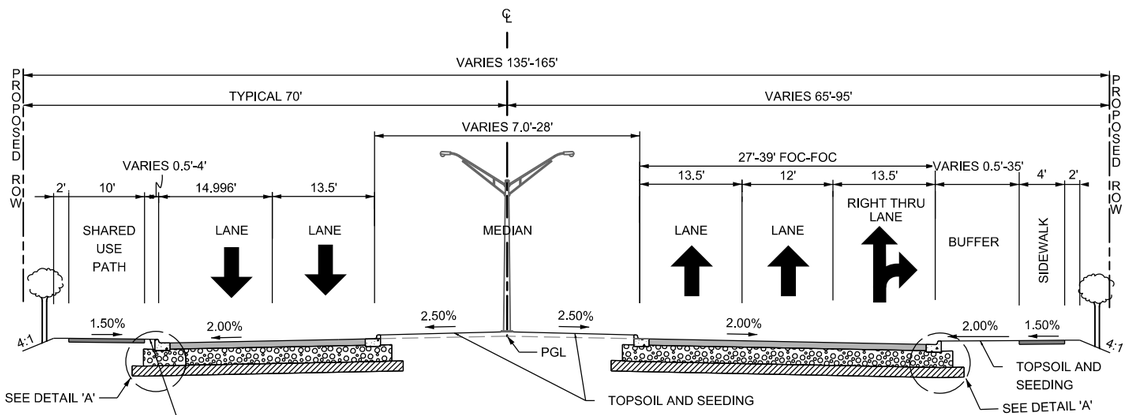

PROPOSED WYOMING SPRINGS ~ TYPICAL SECTION
STA 154+43.94 TO STA 156+93.71

106' TRANSITION TO RIGHT THRU LANE NB STA 154+43.94 TO STA 155+49.41

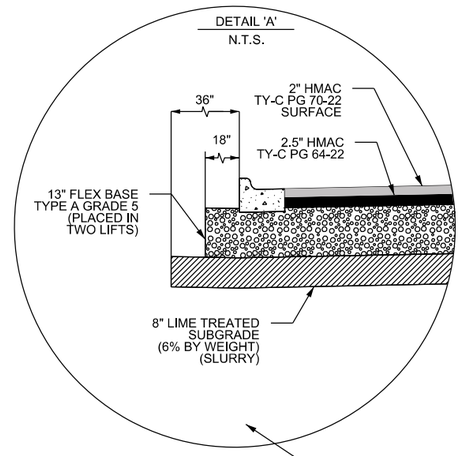

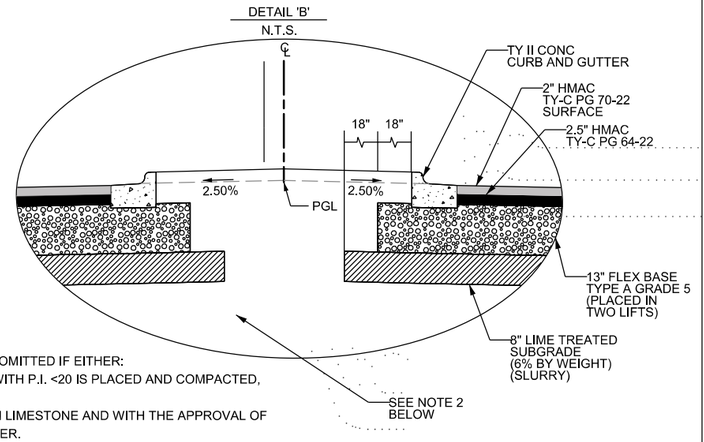

NOTES:

1. LIME TREATMENT MAY BE OMITTED IF EITHER:
A) 18 INCHES OF MATERIAL WITH P.I. <20 IS PLACED AND COMPACTED, OR
B) THE SUBGRADE IS ON TAN LIMESTONE AND WITH THE APPROVAL OF THE GEOTECHNICAL ENGINEER.

2. EMBANKMENT FILL SHALL CONSIST OF BLENDED ON- SITE FILL, WITH AT LEAST 50 PERCENT PROCESSED ROCK AND THE REMAINDER ON-SITE SOILS FREE OF ORGANICS SUCH AS ROOTS OR OTHER DEGRADABLE MATERIAL. THE ROCK FILL MATERIAL SHALL BE PROCESSED TO A MAXIMUM PARTICLE SIZE OF 4 INCHES.

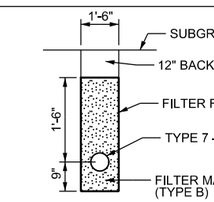

UNDERDRAIN DETAIL *** (ROADWAY)
N.T.S.

ESTIMATED UNDERDRAIN QUANTITIES:

	TY 7 - 6" PIPE UNDERDRAIN	1000 LF
+	UNDERDRAIN EXCAVATION	180 CY
+	UNDERDRAIN BACKFILL	60 CY
+	FILTER MATERIAL (TYPE B)	120 CY
+	FILTER FABRIC	830 SY
+	FOR CONTRACTOR'S INFORMATION ONLY	

*** UNDERDRAIN TO BE CONSTRUCTED WHERE PROPOSED WIDENING CONFLICTS WITH EXISTING UNDERDRAIN OR AS DIRECTED BY THE ENGINEER

SAM BASS ROADWAY DETAIL

WYOMING SPRINGS
SEGMENT 1
ROUND ROCK, TX

ROUND ROCK TEXAS

halff
13620 BRANTWICK DR
BLDG C, STE 100
AUSTIN, TX 78729
(512) 777-4800
TBPELS FIRM #312

Revision No.	Date	Description

E-3-12 8/14/23
STATE OF TEXAS
JEFFREY L NAGY
133255
LICENSED PROFESSIONAL ENGINEER

100% SUBMITTAL

Project No.:	36179.002
Issued:	8/24/2023
Drawn By:	SG
Checked By:	JN
Scale:	N.T.S

Sheet Title
TYPICAL SECTIONS (1 OF 4)

10
Sheet Number

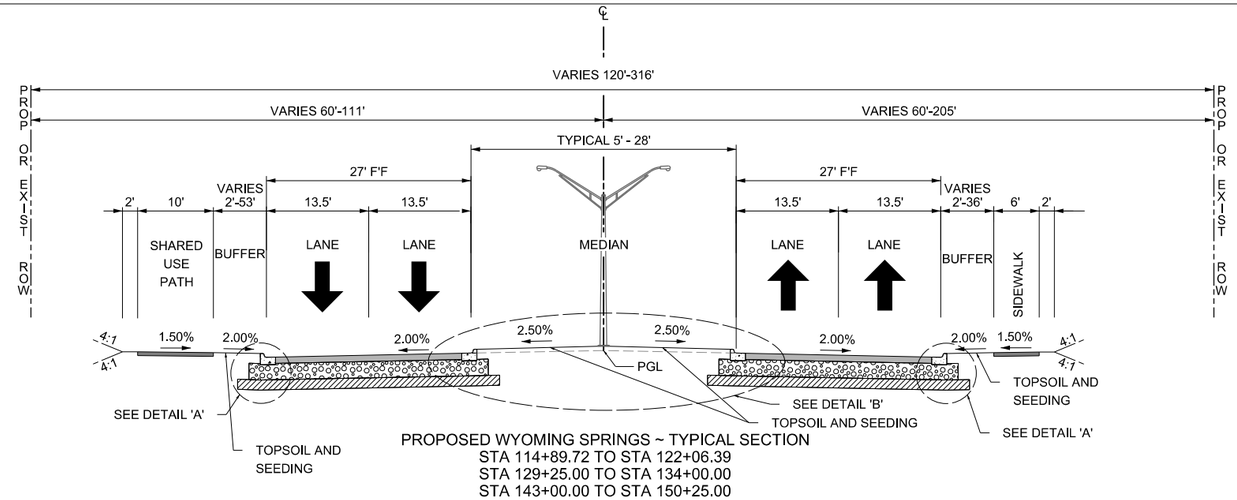

PROPOSED WYOMING SPRINGS ~ TYPICAL SECTION
STA 114+89.72 TO STA 122+06.39
STA 129+25.00 TO STA 134+00.00
STA 143+00.00 TO STA 150+25.00

DETAIL 'C'

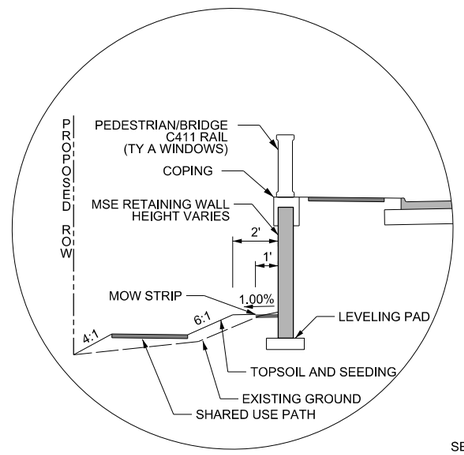

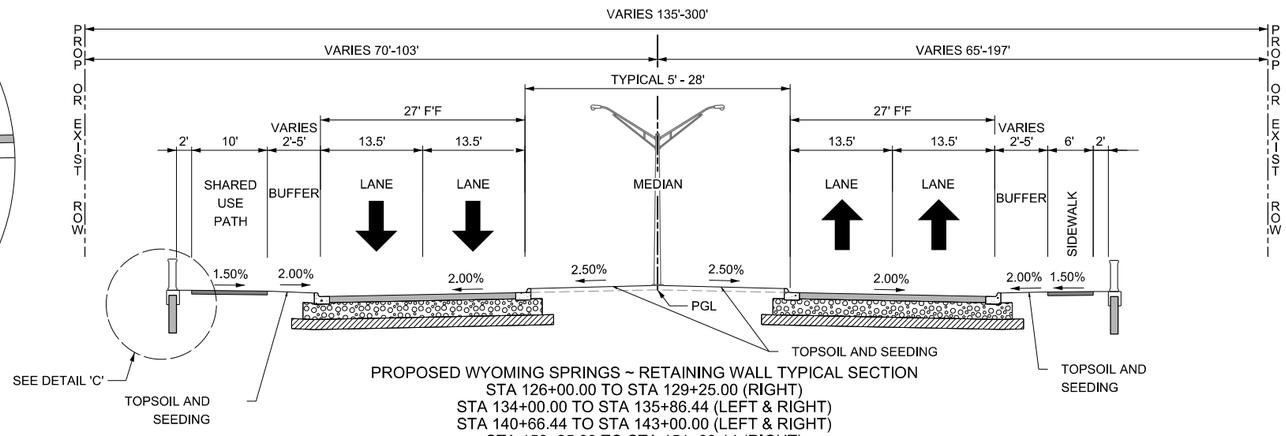

PROPOSED WYOMING SPRINGS ~ RETAINING WALL TYPICAL SECTION
STA 126+00.00 TO STA 129+25.00 (RIGHT)
STA 134+00.00 TO STA 135+86.44 (LEFT & RIGHT)
STA 140+66.44 TO STA 143+00.00 (LEFT & RIGHT)
STA 150+25.00 TO STA 151+89.14 (RIGHT)
STA 151+00.05 TO STA 151+89.14 (LEFT)
STA 154+29.01 TO STA 155+25.00 (RIGHT)
STA 154.29.01 TO STA 156+25.00 (LEFT)

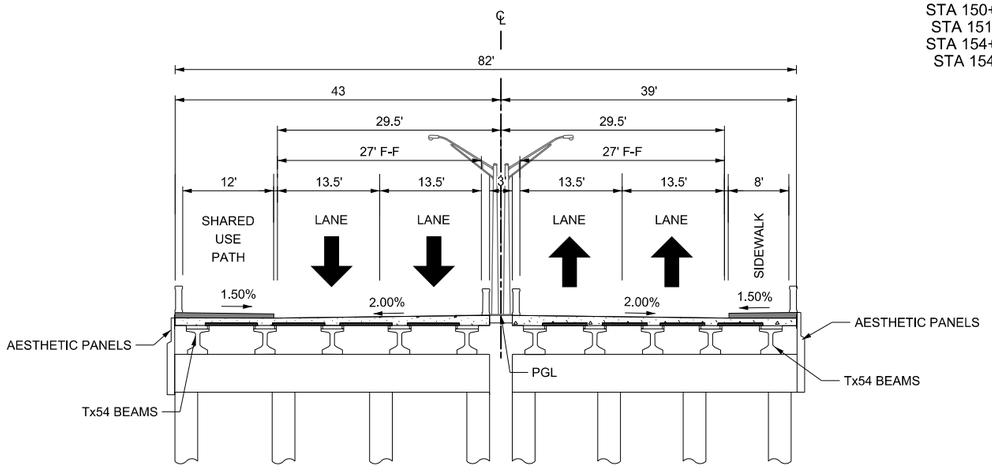

PROPOSED WYOMING SPRINGS ~ BRUSHY CREEK BRIDGE TYPICAL SECTION
STA 135+86.44 TO STA 140+66.44
LENGTH = 480 FT

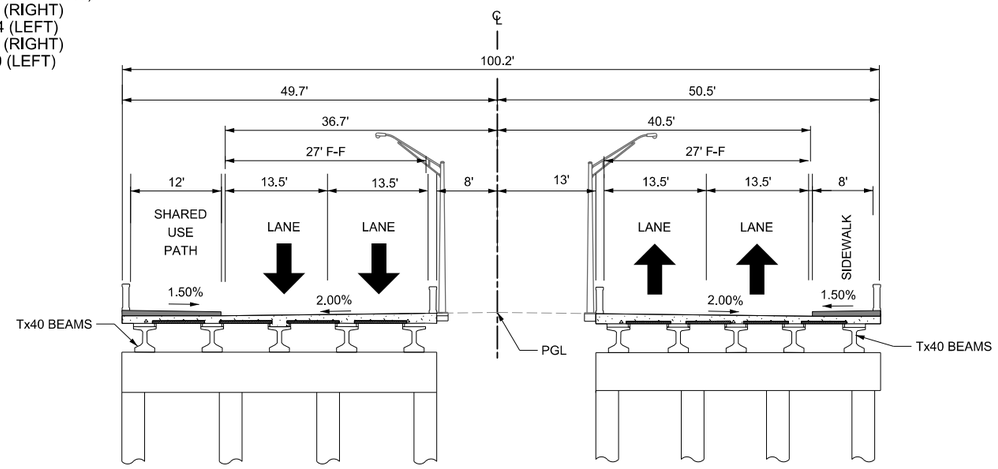

PROPOSED WYOMING SPRINGS ~ DRY FORK BRIDGE TYPICAL SECTION
STA 151+89.14 TO STA 154+29.01
LENGTH = 240 FT

WYOMING SPRINGS
SEGMENT 1
ROUND ROCK, TX

ROUND ROCK TEXAS

halff
13620 BRANTWICK DR
BLDG C, STE 100
AUSTIN, TX 78729
(512) 777-4600
TBPELS FIRM #312

Revision No.	Date	Description

F-312 4/14/23
STATE OF TEXAS
JEFFREY L. NAGY
133255
LICENSED PROFESSIONAL ENGINEER

100% SUBMITTAL

Project No.:	36179.002
Issued:	4/14/2023
Drawn By:	SG
Checked By:	JN
Scale:	N.T.S

Sheet Title
TYPICAL SECTIONS
(2 OF 4)

11
Sheet Number

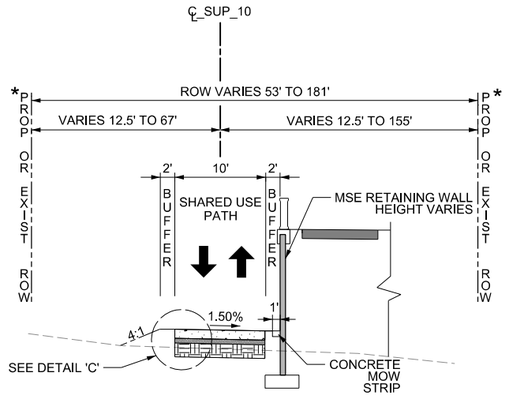

PROPOSED SHARED USE PATH ~ TYPICAL SECTION
4-IN THICK CONC. SIDEWALK STA 1+71.10 TO STA 4+40.00
6-IN THICK CONC. SIDEWALK STA 6+80.00 TO STA 7+46.75

* TRAIL EASEMENT
STA 4+98.49 TO STA 7+57.49

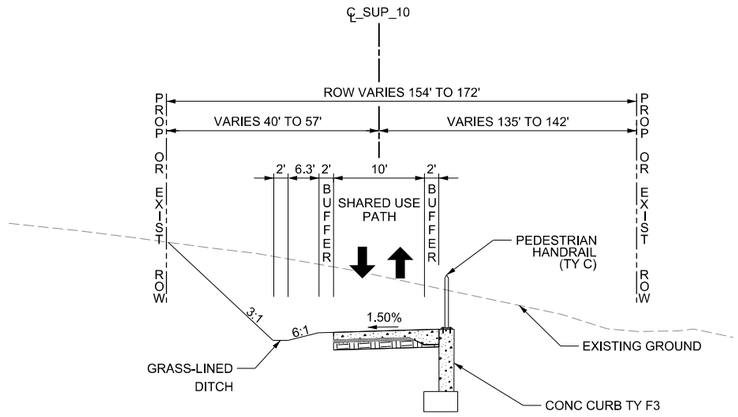

PROPOSED SHARED USE PATH ~ RETAINING WALL TYPICAL SECTION
STA 4+40.00 TO STA 5+10.10

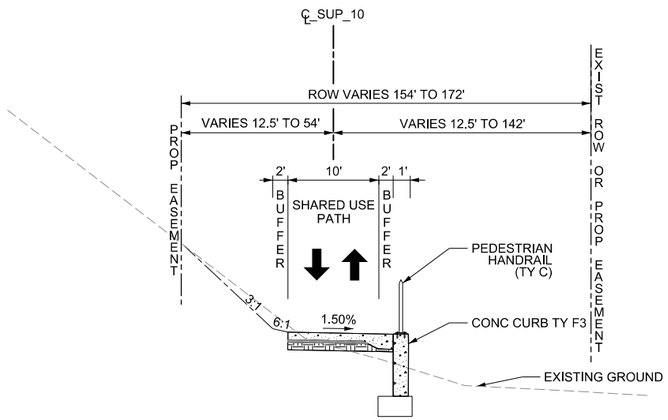

PROPOSED SHARED USE PATH ~ RETAINING WALL TYPICAL SECTION
STA 5+10.10 TO STA 6+19.82

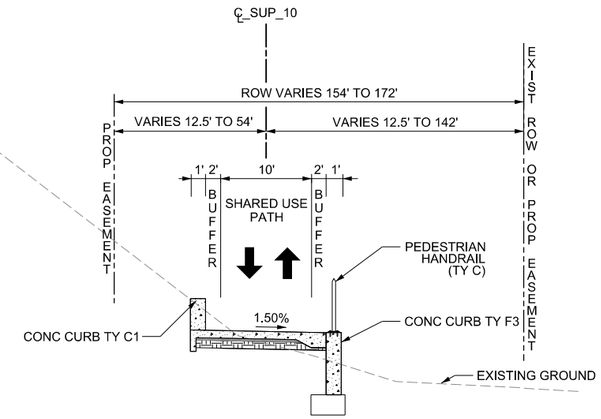

PROPOSED SHARED USE PATH ~ RETAINING WALL TYPICAL SECTION
STA 6+19.82 TO STA 6+80.00

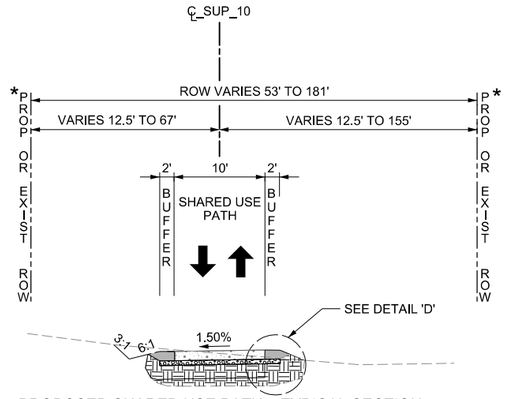

PROPOSED SHARED USE PATH ~ TYPICAL SECTION
DECOMPOSED GRANITE TRAIL STA 7+10.00 TO 7+51.99

* TRAIL EASEMENT
STA 4+98.49 TO STA 7+57.49

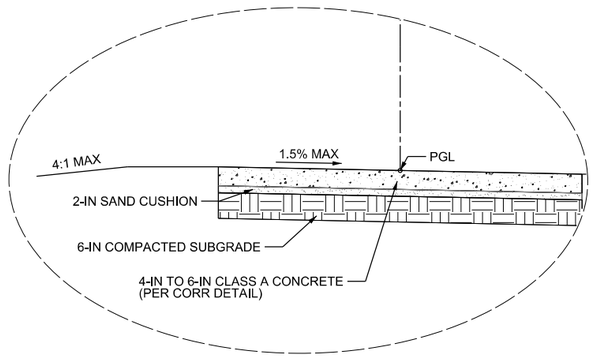

DETAIL 'C'
N.T.S.

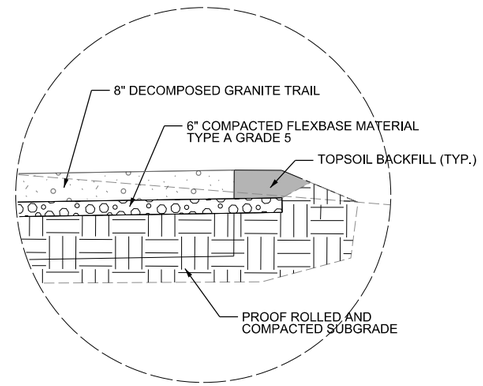

DETAIL 'D'
N.T.S.

WYOMING SPRINGS
SEGMENT 1
ROUND ROCK, TX

ROUND ROCK TEXAS

halff
13620 BRANTWICK DR
BLDG C, STE 100
AUSTIN, TX 78729
(512) 777-4600
TBPELS FIRM #312

Revision No.	Date	Description

F-312 4/5/23
STATE OF TEXAS
JEFFREY L. NAGY
133255
LICENSED PROFESSIONAL ENGINEER

100% SUBMITTAL

Project No.:	36179.002
Issued:	4/14/2023
Drawn By:	SG
Checked By:	JN
Scale:	N.T.S

Sheet Title
TYPICAL SECTIONS
(3 OF 4)

12
Sheet Number

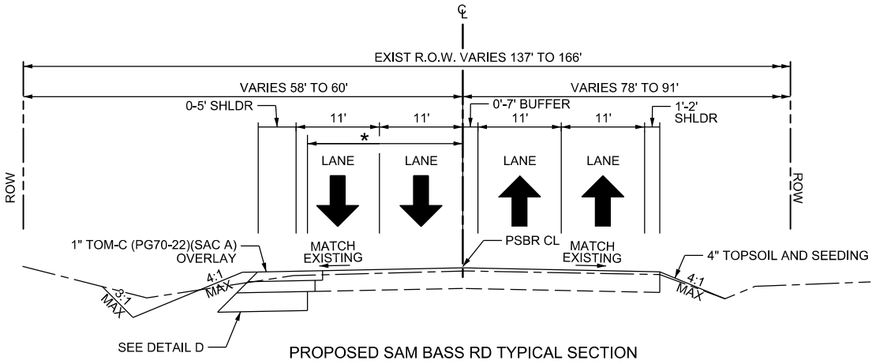

PROPOSED SAM BASS RD TYPICAL SECTION
STA 35+36.19 TO STA 39+65.25
LEFT PROPOSED WIDENING: STA 35+62.37 TO STA 39+65.25

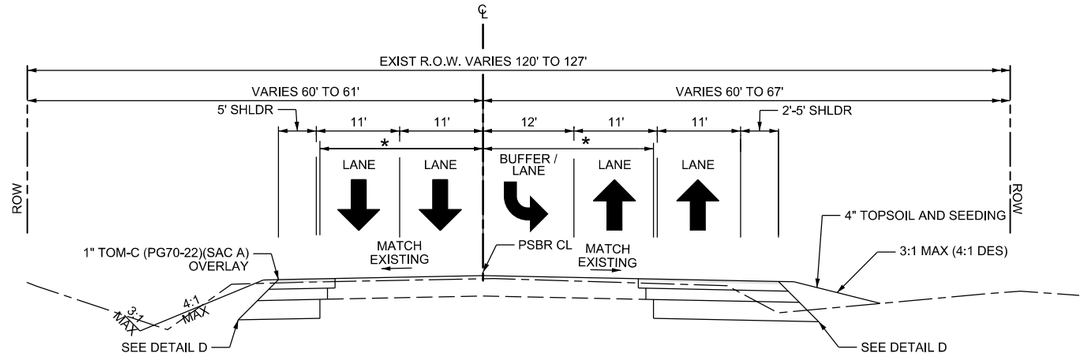

PROPOSED SAM BASS RD TYPICAL SECTION
STA 50+88.53 TO STA 52+99.39
RIGHT & LEFT PROPOSED WIDENING: STA 50+88.53 TO STA 52+99.39

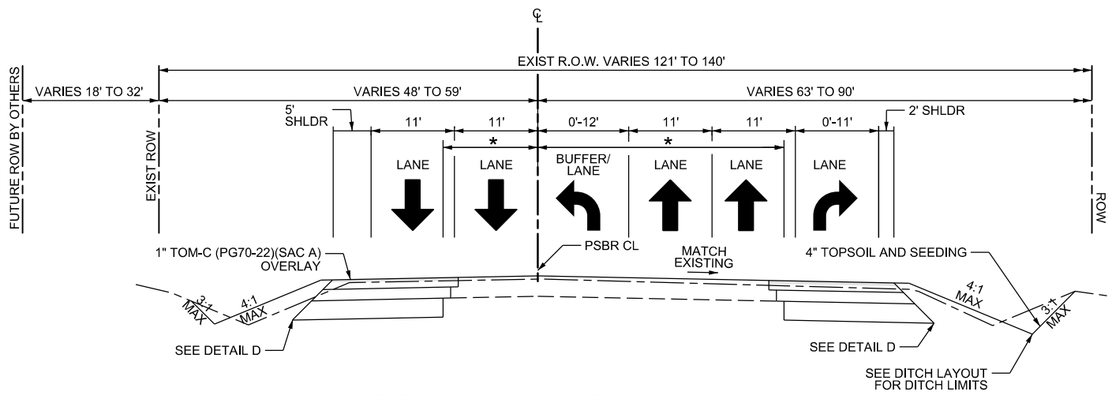

PROPOSED SAM BASS RD TYPICAL SECTION
STA 39+65.25 TO STA 46+00.00
LEFT PROPOSED WIDENING: STA 39+65.25 TO STA 46+00.00
RIGHT PROPOSED WIDENING: STA 42+14.30 TO STA 46+00.00

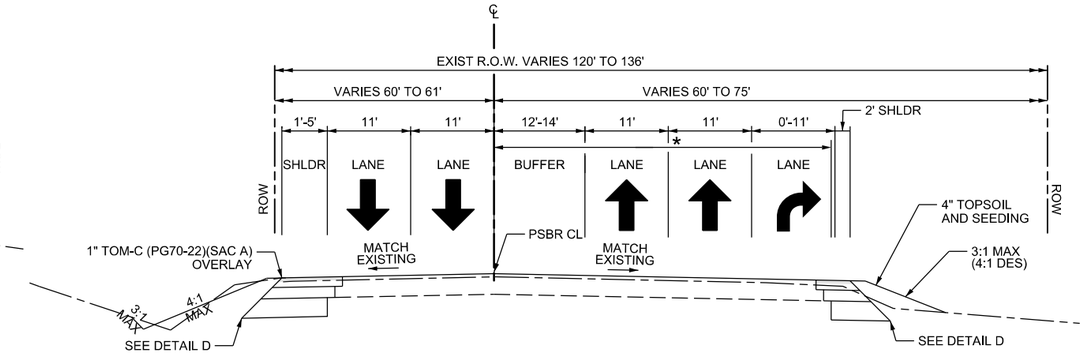

PROPOSED SAM BASS RD TYPICAL SECTION
STA 52+99.39 TO STA 57+85.00
RIGHT PROPOSED WIDENING: STA 52+99.39 TO STA 56+44.25
LEFT PROPOSED WIDENING: STA 52+99.39 TO STA 56+25.19

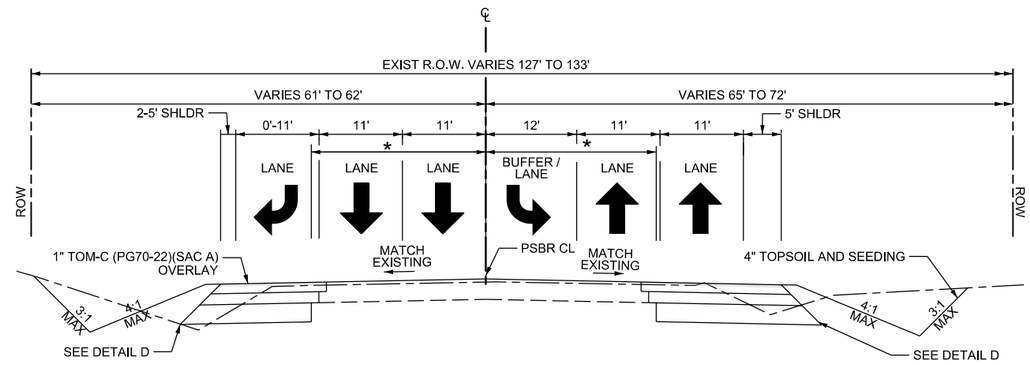

PROPOSED SAM BASS RD TYPICAL SECTION
STA 46+00.00 TO STA 50+88.53
RIGHT PROPOSED WIDENING: STA 46+23.96 TO STA 50+88.53
LEFT PROPSED WIDENING: STA 46+00.00 TO STA 50+88.53

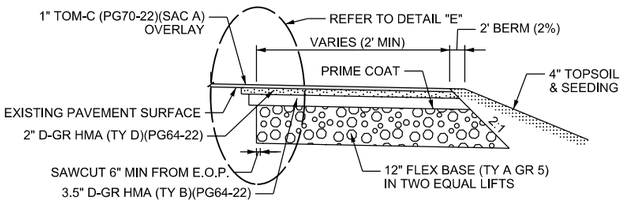

DETAIL "D"
N.T.S.
SEE DETAIL E

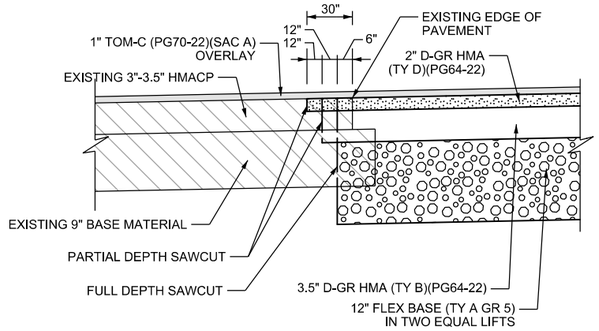

DETAIL "E"
N.T.S.

NOTE:

1. THE TAPERED EDGE SHALL BE PRODUCED BY USE OF A SCREED ATTACHMENT CAPABLE OF PRODUCING A SMOOTH COMPACTED SURFACE. ADDITIONAL COMPACTING EFFORT BEHIND THE SCREED IS NOT REQUIRED.
2. SEE DITCH LAYOUTS FOR MORE INFORMATION ON DITCHES.

* REFER TO PLAN VIEW FOR DIMENSION TO SAWCUT LINE

WYOMING SPRINGS
SEGMENT 1
ROUND ROCK, TX

ROUND ROCK TEXAS

halff
13620 BRANTWICK DR
BLDG C, STE 100
AUSTIN, TX 78729
(512) 777-4600
TBPELS FIRM #312

Revision No.	Date	Description

STATE OF TEXAS
MELANIE S. CLEAVELIN
108945
LICENSED PROFESSIONAL ENGINEER
4/5/23
Melanie S Cleavelin

"THE SEAL APPEARING ON THIS DOCUMENT WAS AUTHORIZED BY MELANIE S. CLEAVELIN, P.E., 108945 ON 4/5/2023. IT IS A VIOLATION OF LAW FOR ANY PERSON, WITHOUT PROPER NOTIFICATION TO THE RESPONSIBLE ENGINEER IN AN OFFENSE UNDER THE TEXAS ENGINEERING PRACTICE ACT, THE RECORD COPY OF THIS DRAWING IS ON FILE AT THE OFFICES OF HALFF ASSOCIATES, INC., 1201 NORTH BOWSER RD, RICHARDSON, TEXAS, 75081, (TBPE FIRM #312)."

100% SUBMITTAL

Project No.:	36179.002
Issued:	4/6/2023
Drawn By:	TM
Checked By:	MC
Scale:	N.T.S.

Sheet Title
TYPICAL SECTIONS
4 of 4

13
Sheet Number

TRAFFIC CONTROL GENERAL NOTES:

1. THE CONTRACTOR'S WORK SHALL MAXIMIZE THE SAFETY OF THE TRAVELING PUBLIC AND SHALL GENERALLY CONFORM TO THE FOLLOWING SEQUENCE OF CONSTRUCTION:
   A. INSTALL ALL BARRICADES, SIGNS, AND WARNING LIGHTS AS SHOWN ON THE PLANS. THIS WORK SHALL BE IN ACCORDANCE WITH THE STANDARD "BC", "TCP", "WZ" SHEETS AND THE TEXAS MUTCD, AND AS DIRECTED.
   B. ADDITIONAL SIGNS, BARRICADES OR TRAFFIC CONTROL DEVICES OTHER THAN THOSE SPECIFIED IN THE PLANS MAY BE REQUIRED FOR THE SAFE MOVEMENT OF TRAFFIC THROUGH THE WORK ZONE. PAYMENT FOR ALL SUCH SIGNS, BARRICADES OR TRAFFIC CONTROL DEVICES SHALL BE CONSIDERED SUBSIDIARY TO THE ITEM 502 "BARRICADES, SIGNS AND TRAFFIC HANDLING".
   C. SIGN AND BARRICADE LOCATIONS MAY NEED TO BE ADJUSTED DURING CONSTRUCTION, AS APPROVED, TO ACCOMMODATE ROADWAY AND DRAINAGE FEATURES. PAYMENT FOR SUCH ADJUSTMENTS SHALL BE SUBSIDIARY TO ITEM 502.
   D. CAREFULLY MONITOR WORK SITES TO ENSURE THAT TRAFFIC CONTROL MEASURES ARE OPERATING EFFECTIVELY AND THAT ALL DEVICES USED ARE CLEARLY VISIBLE, CLEAN AND IN GOOD REPAIR.
   E. SUBMIT A DETAILED SCHEDULE OF WORK TO THE ENGINEER PRIOR TO THE BEGINNING OF CONSTRUCTION.
2. ANY REQUEST TO ALTER THE SEQUENCE OF CONSTRUCTION OR TRAFFIC CONTROL PLANS SHALL BE SIGNED AND SEALED BY A LICENSED ENGINEER AND SUBMITTED TO THE CITY FOR WRITTEN APPROVAL PRIOR TO PROSECUTING CHANGES.
3. ALL STATIONS ARE APPROXIMATE AND SHOULD BE CROSS REFERENCED WITH THE PLANS.
4. MAINTAIN ACCESS TO ADJACENT PROPERTIES, DRIVEWAYS AND SIDE ROADS AT ALL TIMES DURING CONSTRUCTION. CONSTRUCT DRIVEWAYS IN HALF-WIDTHS TO MAINTAIN ACCESS. IF MULTIPLE DRIVEWAYS EXIST FOR THE SAME PROPERTY, THE CONTRACTOR MAY BE ALLOWED TO CLOSE ONE DRIVEWAY AT A TIME AS DIRECTED UNLESS STATED OTHERWISE IN PLANS.
5. PLACE A 3:1 MINIMUM SAFETY SLOPE ADJACENT TO THE CONSTRUCTION ZONE AND TRAVELED PAVEMENT AT THE END OF EACH WORK DAY IF DROP-OFF EXCEEDS 2 INCHES.
6. ATTEMPTS HAVE BEEN MADE TO PROVIDE SUFFICIENT TEMPORARY DRAINAGE DURING CONSTRUCTION. BE RESPONSIBLE TO MAINTAIN DRAINAGE DURING ALL PHASES OF CONSTRUCTION AND PROVIDE POSITIVE DRAINAGE OFF THE ROAD AND TOWARDS DRAINAGE STRUCTURES.
7. DETAILED DIRECTIONS WHEN TO CONSTRUCT STORM SEWERS, CULVERTS AND LATERALS ARE NOT ALWAYS DICTATED. DETERMINE WHEN TO CONSTRUCT DRAINAGE SYSTEMS WHEN NOT DETAILED IN THE NARRATIVE OR PLANS.
8. CONSTRUCT ALL DRAINAGE CULVERTS AND STORM SEWER SYSTEMS STARTING WITH THE DOWNSTREAM MOST INLET/OUTLET STRUCTURE AND WORKING UPSTREAM UNLESS INDICATED OTHERWISE IN THE PLANS
9. CULVERTS, LATERALS AND UTILITIES CONSTRUCTED ACROSS EXISTING PAVEMENT SHALL BE CONSTRUCTED USING CUT AND RESTORE PAVEMENT AS DIRECTED DURING OFF-PEAK OVERNIGHT HOURS UTILIZING LANE CLOSURES AS DETAILED IN THE NARRATIVE. MAINTAIN AT LEAST ONE LANE IN EACH DIRECTION AT ALL TIMES. RESTORE THE PAVEMENT AND REOPEN TO TRAFFIC AFTER EACH OVERNIGHT CONSTRUCTION PERIOD. USE 2-SAC GROUT TO BACKFILL CULVERT AND LATERAL TRENCHES OR SELECT BACKFILL AS INDICATED ON THE PLANS AND AS DIRECTED.
10. ALL DRAINAGE STUB-OUTS, PARTIAL INLET CONSTRUCTION AND INCOMPLETE SYSTEM CONSTRUCTION SHALL BE TEMPORARILY PLUGGED AND CAPPED PRIOR TO BACKFILLING THE STRUCTURES.
11. REMOVE EXISTING SIGNS AND PAVEMENT MARKINGS IN CONFLICT WITH PROPOSED CONSTRUCTION AS DIRECTED. CONTRACTOR TO VERIFY THE NECESSARY PROPOSED WARNING AND GUIDE SIGNS ARE IN PLACE PRIOR TO REMOVING EXISTING SIGNS.
12. WATER FILLED TRAFFIC BARRIERS SHALL BE IN ACCORDANCE WITH TXDOT DETAIL SHEET BC(9)-21. WATER FILLED BARRIERS SHALL BE PLACED IN ACCORDANCE TO APPLICATION AND INSTALLATION REQUIREMENTS SPECIFIC TO THE DEVICE, AND USED ONLY WHEN SHOWN ON THE TXDOT COMPLIANT WORK ZONE TRAFFIC CONTROL DEVICE LIST.

NON-REMOVEABLE WORK ZONE STRIPING MAY BE PLACED ONLY ON AREAS OF EXISTING SAM BASS RD THAT ARE BEING COVERED WITH OVERLAY BEFORE TRAFFIC IS SHIFTED.

SEQUENCE OF CONSTRUCTION

1. ERECT PROJECT LIMITS AND ADVANCE WARNING SIGNS AS SHOWN IN THE PLANS, TXDOT BC, TCP AND WZ STANDARDS, AND AS DIRECTED BY THE ENGINEER.
2. PLACE AND MAINTAIN SW3P DEVICES AS SHOWN IN THE PLANS AND AS DIRECTED BY THE ENGINEER.
3. CONSTRUCT ALL PERMANENT WYOMING SPRINGS PAVEMENT AS DESCRIBED IN THE NARRATIVE.
4. CONSTRUCT CROSS CULVERT D ON SAM BASS ROAD.
5. CONSTRUCT SAM BASS ROAD WIDENING AND WYOMING SPRINGS STA 157+00 TO END OF PROJECT AS DESCRIBED IN THE NARRATIVE.
6. PERFORM FINAL SITE CLEAN-UP AS DIRECTED BY THE ENGINEER.
7. REMOVE SW3P DEVICES UPON FINAL ESTABLISHMENT OF VEGETATIVE COVER
8. REMOVE PROJECT LIMIT/ADVANCE WARNING SIGNS.

NARRATIVES

CONSTRUCT CROSS CULVERT D

1. USING TCP (2-4B) OR TCP (2-5B), SHIFT TRAFFIC TO TWO EXISTING WESTBOUND LANES AND CONSTRUCT THE DOWNSTREAM END OF CULVERT D: BEGIN TO STA 1+43.13. USE BC (10) WHEN WORKERS ARE NOT PRESENT.
2. USING TYPICAL APPLICATION 30 IN PART 6 OF THE TMUTCD, SHIFT TRAFFIC TO THE OUTSIDE LANES AND CONSTRUCT THE MIDDLE SECTION OF THE CULVERT D: STA 1+43.13 TO STA 1+87.91. USE BC(10) WHEN WORKERS ARE NOT PRESENT.
3. USING TCP (2-4B) OR TCP (2-5B), SHIFT TRAFFIC TO TWO EXISTING EASTBOUND LANES AND CONSTRUCT THE UPSTREAM END OF CULVERT D: STA 1+87.91 TO END. USE BC(10) WHEN WORKERS ARE NOT PRESENT.
4. ON EACH STEP ABOVE, IF CONTRACTOR CANNOT COMPLETE CULVERT INSTALLATION AND PAVEMENT REPAIR BEFORE NEEDING TO TEMPORARILY OPEN TO TRAFFIC, THEY SHALL PROVIDE STEEL PLATE FOR ANTICIPATED LOADS WITH ASPHALT VERTICAL TRANSITION.

WYOMING SPRINGS CONSTRUCTION

1. PUT UP ROAD CLOSED BARRIERS AT STA 112+20 AND STA 157+00.
2. CONSTRUCT ALL PERMANENT WYOMING SPRINGS PAVEMENT FROM STA 112+20 TO STA 157+00. CONTRACTOR SHALL CLOSE EXISTING HAIRY MAN ROAD AND DETOUR AS SHOWN IN DETOUR PLAN WHEN COMPLETING OVERHEAD BRIDGE WORK OVER TRAVEL LANES.
3. SHIFT TRAFFIC ON BRIGHTWATER BLVD / CREEK BEND BLVD AND WYOMING SPRINGS AS SHOWN ON TCP SHEET 1 OF 2.
4. CONSTRUCT BEGINNING OF WYOMING SPRINGS TO STA 112+20

SAM BASS CONSTRUCTION

1. INSTALL NEW TRAFFIC SIGNAL AT SAM BASS AND WYOMING SPRINGS. CONFIGURE SIGNAL HEADS ON EASTBOUND SIGNAL AS SHOWN IN TEMPORARY SIGNAL HEAD PLACEMENT DETAIL ON TRAFFIC CONTROL PLAN SHEET 2 OF 2.
2. SHIFT TRAFFIC AS SHOWN ON TCP SHEET 2 OF 2
3. CONSTRUCT SAM BASS WIDENING AND WYOMING SPRINGS PAVEMENT STA 157+00 TO END OF PROJECT.
4. OVERLAY SAM BASS ROAD AS SHOWN IN PAVING LAYOUT
5. UTILIZING TCP(3-3), INSTALL PERMANENT STRIPING.
6. RECONFIGURE SIGNAL HEADS ON EASTBOUND SAM BASS/ WYOMING SPRINGS SIGNAL TO FINAL PLACEMENT AS SHOWN ON PROPOSED SIGNAL PLANS.

NOTE: CONTRACTOR SHALL COORDINATE WITH SAM BASS PROJECT WEST OF PROJECT LIMITS. PAVEMENT WORK SHALL NOT BEGIN UNTIL CULVERT AT STA 42+50 HAS BEEN CONSTRUCTED BY OTHERS.

WYOMING SPRINGS
SEGMENT 1
ROUND ROCK, TX

ROUND ROCK TEXAS

halff
13620 BRANTWICK DR
BLDG C, STE 100
AUSTIN, TX 78729
(512) 777-4600
TBPELS FIRM #312

Revision No.	Date	Description
.	.	.

STATE OF TEXAS
MELANIE S. CLEAVELIN
108945
LICENSED
PROFESSIONAL ENGINEER
4/5/23

THE SEAL APPEARING ON THIS DOCUMENT WAS AUTHORIZED BY MELANIE S. CLEAVELIN, P.E. 108945 ON 4/5/2023. ALTERATION OF A SEALED DOCUMENT WITHOUT PROPER AUTHORITY TO DO SO IS UNLAWFUL AND MAY SUBJECT AN OFFENSE UNDER THE TEXAS ENGINEERING PRACTICE ACT. THE RECORD COPY OF THIS DRAWING IS ON FILE AT THE OFFICES OF HALFF ASSOCIATES, INC., 1201 NORTH BOWSER RD, RICHARDSON, TEXAS, 75081 / TBPE FIRM #F-312.

100% SUBMITTAL

Project No.:	36179.002
Issued:	4/6/2023
Drawn By:	TM
Checked By:	MC
Scale:	N.T.S.

Sheet Title
TRAFFIC CONTROL CONSTRUCTION SEQUENCE

14
Sheet Number

PCN
ROUNDROCK2023

User:
Date/Time:
File:
4/5/2023 3:57:43 PM
M:\36179\002\03\36179002CAD03\sheet\PCN36179.DGN
TCP-14(TCP_4-1_ACH).dgn
HALFF
ak1259
USING M:\DGN_SETTINGS_STD\
PCONFIG_Color_Dark.cfg

WESTBOUND DETOUR PLAN

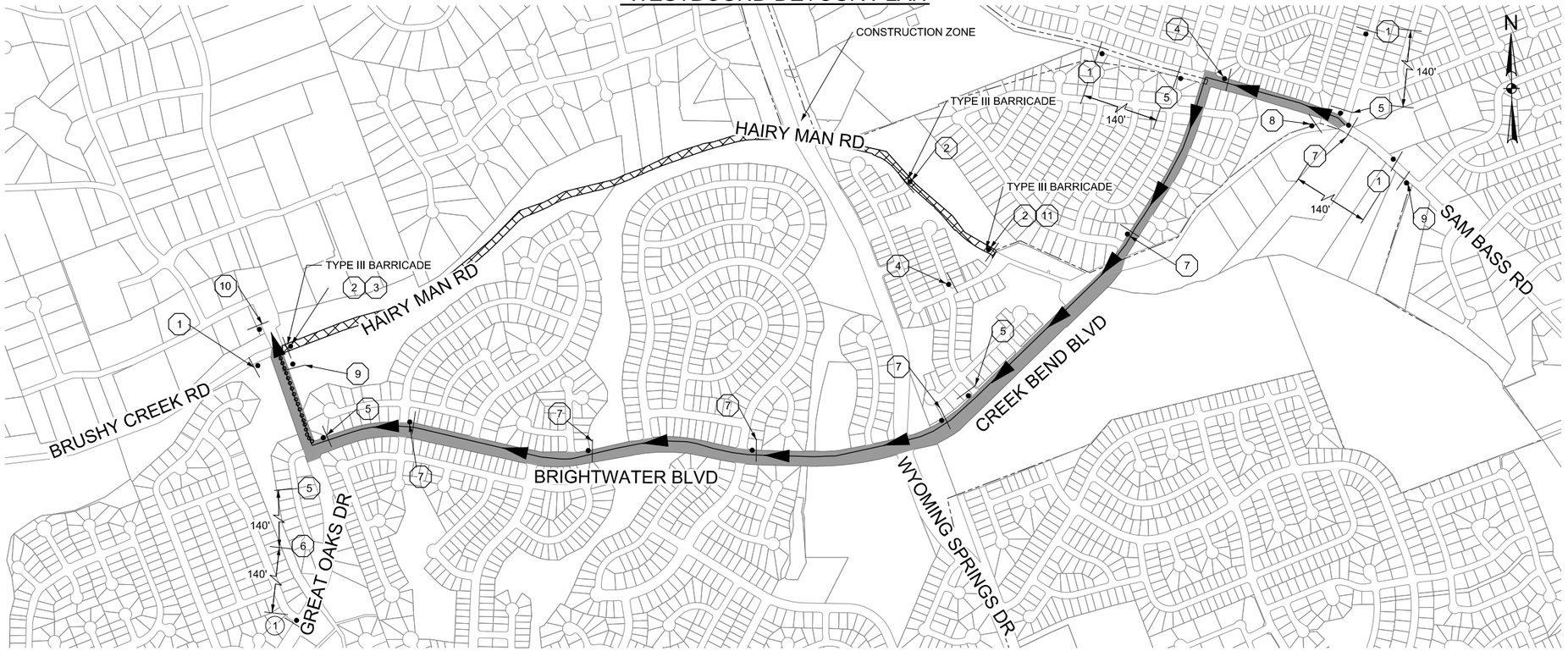

EASTBOUND DETOUR PLAN

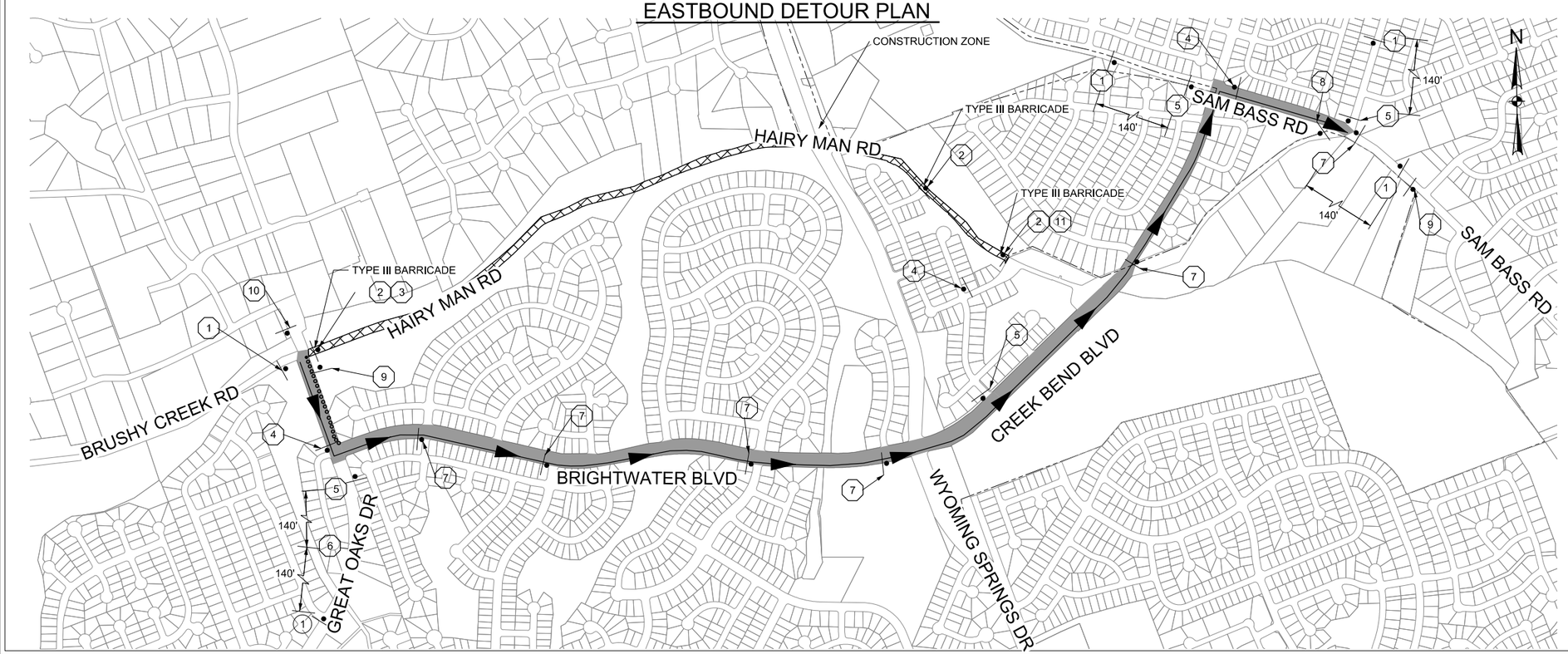

0 500 1000 1500 2000

SCALE: 1"=1000'

LEGEND

- ETJ
- PROPOSED SIGN
- MIN 36" CONE
- ROAD CLOSURE
- DETOUR ROUTE

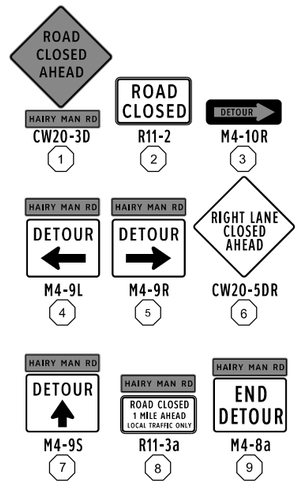

NOTES:

1. A STREET NAME SHOULD BE PLACED ABOVE, OR THE STREET NAME SHOULD BE INCORPORATED INTO, A DETOUR (M4-9) SIGN TO INDICATE THE NAME OF THE STREET BEING DETOURED.
2. DETOUR FOR OVER NIGHT USE. FOR BRIDGE WORK OVER HAIRY MAN ROAD.

WYOMING SPRINGS
SEGMENT 1
ROUND ROCK, TX

ROUND ROCK TEXAS

halff
13620 BRANTWICK DR
BLDG C, STE 100
AUSTIN, TX 78729
(512) 777-4600
TBPELS FIRM #312

Revision No.	Date	Description

F-312 STATE OF TEXAS
JEFFREY L. NAGY
133255
LICENSED PROFESSIONAL ENGINEER
4/14/23

100% SUBMITTAL

Project No.:	36179.002
Issued:	4/14/2023
Drawn By:	HW
Checked By:	JN
Scale:	1"=1000'

Sheet Title
HAIRY MAN RD
OVERNIGHT
DETOUR PLAN

15
Sheet Number

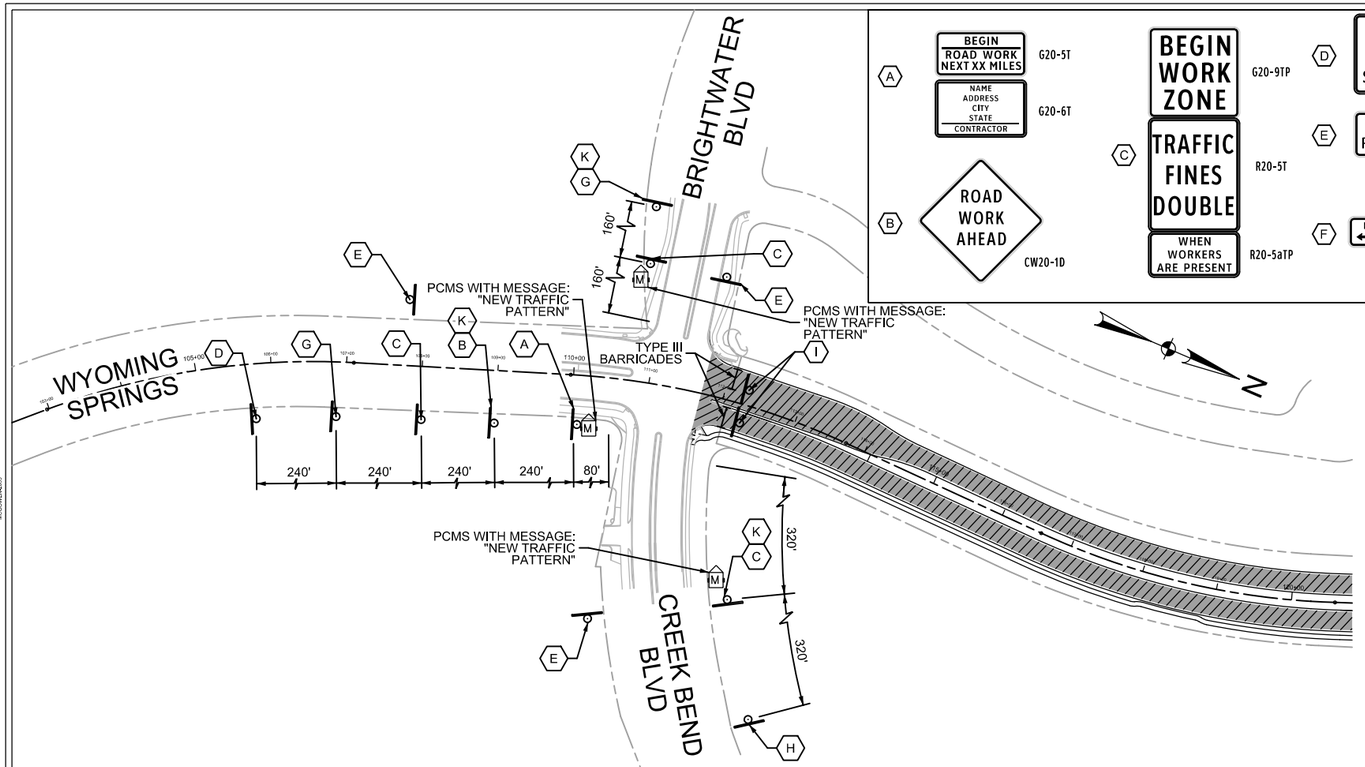

BRIGHTWATER BLVD / CREEK BEND BLVD AT WYOMING SPRINGS

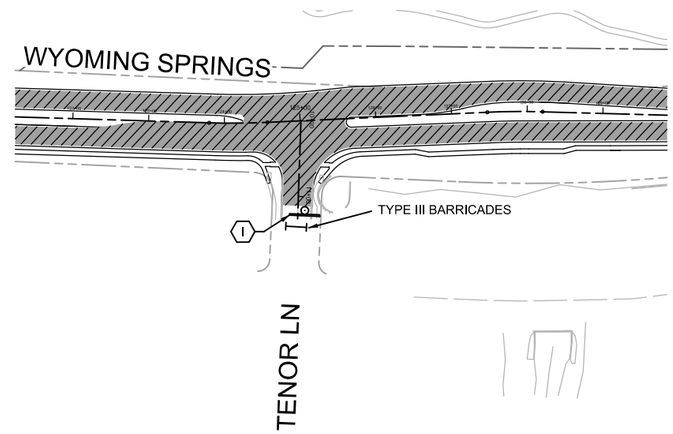

TENOR LANE AT WYOMING SPRINGS

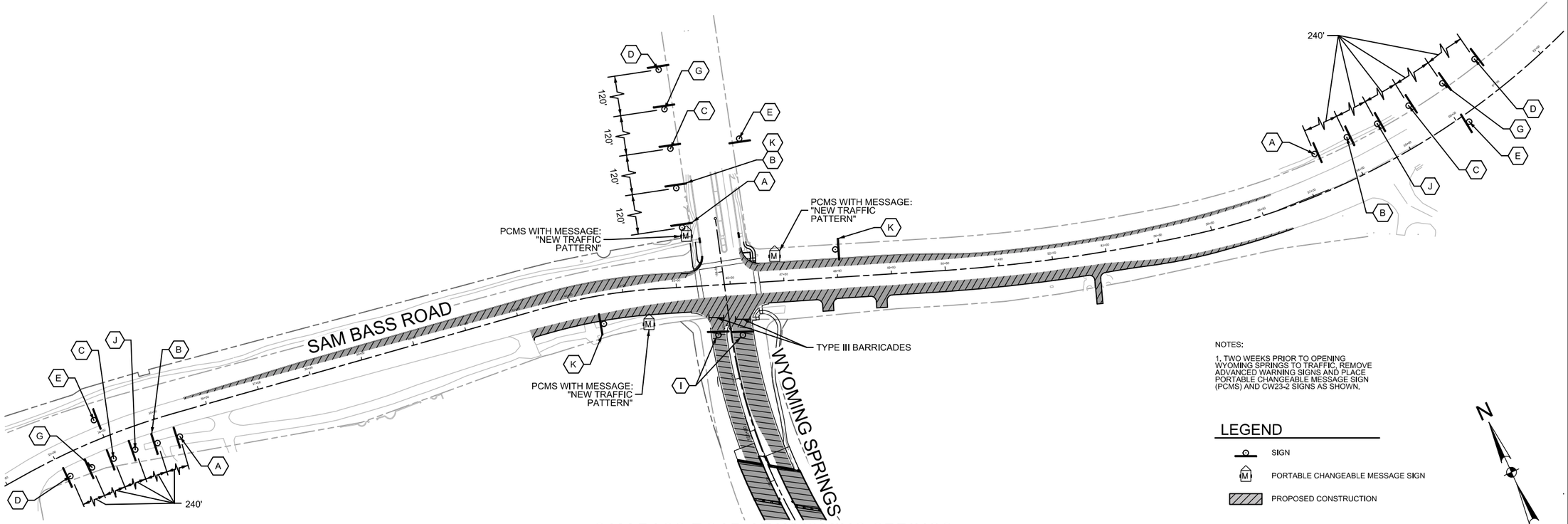

SAM BASS ROAD AT WYOMING SPRINGS

A — BEGIN ROAD WORK NEXT XX MILES — G20-5T
NAME ADDRESS CITY STATE CONTRACTOR — G20-6T
B — ROAD WORK AHEAD — CW20-1D
C — BEGIN WORK ZONE — G20-9TP
TRAFFIC FINES DOUBLE — R20-5T
WHEN WORKERS ARE PRESENT — R20-5aTP
D — OBEY WARNING SIGNS STATE LAW — R20-3T
E — END ROAD WORK — G20-2
F — ROAD WORK ← NEXT XX MILES — G20-1bTL
G — STAY ALERT TALK OR TEXT LATER — G20-10T
H — ROAD WORK NEXT XX MILES → — G20-1bTR
I — ROAD CLOSED — R11-2
J — SPEED LIMIT 40 — R2-1
K — NEW TRAFFIC PATTERN AHEAD — CW23-2 REFER TO NOTE 1

0 100 200 300 400
SCALE: 1"=200'

NOTES:

1. TWO WEEKS PRIOR TO OPENING WYOMING SPRINGS TO TRAFFIC, REMOVE ADVANCED WARNING SIGNS AND PLACE PORTABLE CHANGEABLE MESSAGE SIGN (PCMS) AND CW23-2 SIGNS AS SHOWN.

LEGEND

- SIGN
- PORTABLE CHANGEABLE MESSAGE SIGN
- PROPOSED CONSTRUCTION

WYOMING SPRINGS
SEGMENT 1
ROUND ROCK, TX

halff
13620 BRANTWICK DR
BLDG C, STE 100
AUSTIN, TX 78729
(512) 777-4600
TBPELS FIRM #312

Revision No.	Date	Description

STATE OF TEXAS
MELANIE S. CLEAVELIN
108945
LICENSED PROFESSIONAL ENGINEER
4/5/23
Melanie S. Cleavelin

THE SEAL APPEARING ON THIS DOCUMENT WAS AUTHORIZED BY MELANIE S. CLEAVELIN, P.E. 108945 ON 4/5/2023. ALTERATION OF A SEALED DOCUMENT WITHOUT PROPER AUTHORITY TO DO SO IS UNLAWFUL AND CONSTITUTES AN OFFENSE UNDER THE TEXAS ENGINEERING PRACTICE ACT. THE RECORD COPY OF THIS DRAWING IS ON FILE AT THE OFFICES OF HALFF ASSOCIATES, INC., 1201 NORTH BOWSER RD, RICHARDSON, TEXAS, 75081 TBPE FIRM #F-312.

100% SUBMITTAL

Project No.:	36179.002
Issued:	4/6/2023
Drawn By:	TM
Checked By:	MC
Scale:	1"=200'

Sheet Title
ADVANCE WARNING SIGN LAYOUT

16
Sheet Number

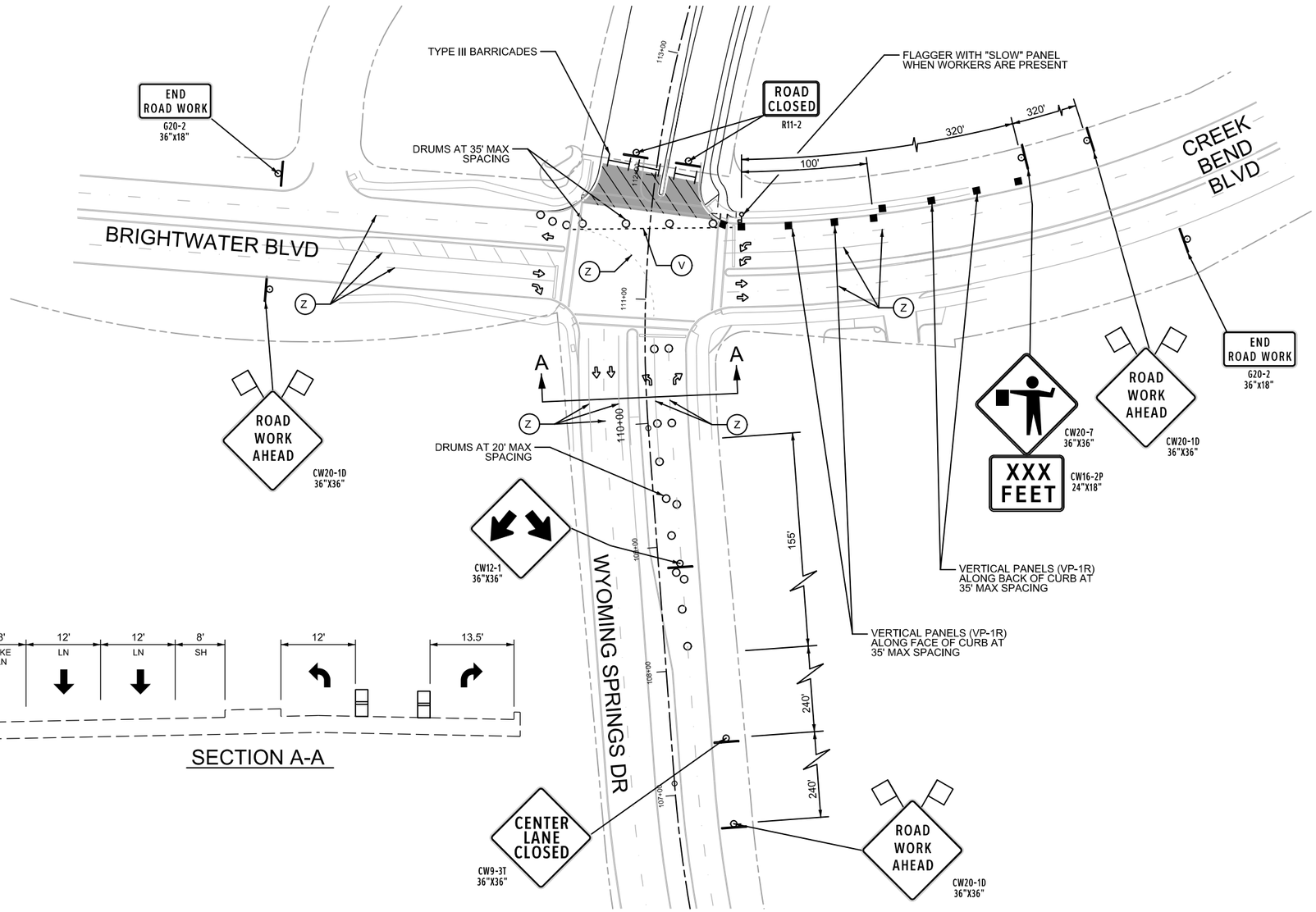

LEGEND

- SIGN
- CURRENT WORK ZONE
- REFLECTORIZED PLASTIC DRUM
- (Z) EXISTING STRIPING TO REMAIN
- (V) 4" WHITE DOT
- TRAILER MOUNTED FLASHING ARROW BOARD
- FLAGGER
- TY III BARRICADE
- REFLECTORIZED VERTICAL PANELS
- DIRECTION OF TRAFFIC

NOTES:

1. PLACE TRAFFIC CONTROL ONLY AS REQUIRED FOR TIE-IN WORK.
2. CONTRACTOR SHALL PERFORM WORK ADJACENT TO CROSS CREEK / BRIGHTWATER ON SATURDAYS AND SUNDAYS BETWEEN 9 AM AND 6 PM.
3. CONTRACTOR SHALL EXPEDITE CONSTRUCTION AS SOON AS TRAFFIC CONTROL IS IMPLEMENTED ALONG CROSS CREEK / BRIGHTWATER.
4. COVER FLAGGER AHEAD SIGN WHEN WORKERS NOT PRESENT.

WYOMING SPRINGS
SEGMENT 1
ROUND ROCK, TX

ROUND ROCK TEXAS

halff
13620 BRANTWICK DR
BLDG C, STE 100
AUSTIN, TX 78729
(512) 777-4600
TBPELS FIRM #312

Revision No.	Date	Description

STATE OF TEXAS
MELANIE S. CLEAVELIN
108945
LICENSED PROFESSIONAL ENGINEER
4/5/23
Melanie S. Cleavelin

THE SEAL APPEARING ON THIS DOCUMENT WAS AUTHORIZED BY MELANIE S. CLEAVELIN, P.E. 108945 ON 4/5/2023. ALTERATION OF A SEALED DOCUMENT WITHOUT PROPER AUTHORIZATION AND SEAL OF THE ISSUING PARTY IS AN OFFENSE UNDER THE TEXAS ENGINEERING PRACTICE ACT. THE RECORD COPY OF THIS DRAWING IS ON FILE AT THE OFFICES OF HALFF ASSOCIATES, INC., 1201 NORTH BOWSER RD, RICHARDSON, TEXAS, 75081. TBPE FIRM #F-312.

100% SUBMITTAL

Project No.:	36179.002
Issued:	4/6/2023
Drawn By:	TM
Checked By:	MC
Scale:	1"=100'

Sheet Title
TRAFFIC CONTROL PLAN
(1 OF 2)

17
Sheet Number

WATER FILLED BARRIERS. REFER TO TRAFFIC CONTROL GENERAL NOTE 12 ON SHEET 14.

3' MIN | 11'-22' | 12' | 11' | 3' MIN

SECTION A-A
NTS

LEFT LANE CLOSED
CW20-5TL 36" X 36"

XXX FT
CW16-3aP 24"x12"

END ROAD WORK
G20-2 36"x18"

ROAD WORK AHEAD
CW20-1D 36" X 36"

240' | 240' | 240' | 320' TAPER | 155' | 75' SHIFT TAPER

FUTURE ROW BY OTHERS

EXIST ROW

SAM BASS RD

EXTEND CULVERT B DURING THIS PHASE OF CONSTRUCTION

WYOMING SPRINGS DR

MATCH LINE 47+00 [CL_SBR]

ROAD CLOSED
R11-2

TYPE III BARRICADES

FUTURE CULVERT BY OTHERS TO BE CONSTRUCTED PRIOR TO ROADWAY CONSTRUCTION

N
0 50 100 150 200
SCALE: 1"=100'

LEGEND

- SIGN
- CURRENT WORK ZONE
- TEMPORARY DRIVEWAY
- REFLECTORIZED PLASTIC DRUM
- WATER FILLED BARRIER
- (N) NON-REMOVABLE
- (R) REMOVABLE
- (S) 24" WHITE SOLID
- (T) 4" YELLOW DOT
- (U) ARROW
- (V) 4" WHITE DOT
- (W) 4" WHITE SOLID
- (X) 4" WHITE BROKEN
- (Y) 4" YELLOW SOLID
- (Z) EXISTING / PREVIOUS MARKINGS
- TRAILER MOUNTED FLASHING ARROW BOARD
- FLAGGER
- TY III BARRICADE
- REFLECTORIZED VERTICAL PANELS
- DIRECTION OF TRAFFIC

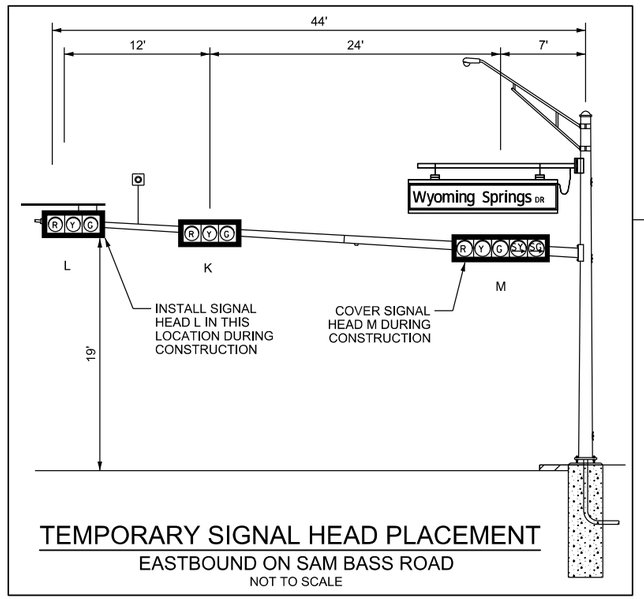

TEMPORARY SIGNAL HEAD PLACEMENT
EASTBOUND ON SAM BASS ROAD
NOT TO SCALE

MATCH LINE 47+00 [CL_SBR]

TYPE III BARRICADES

INSTALL CROSS CULVERT D PRIOR TO BEGINNING ROADWAY WIDENING SEE TCP NARRATIVE

EXIST ROW

SAM BASS RD

TEMPORARY ACCESS

ROAD CLOSED
R11-2

CONTRACTOR SHALL COORDINATE WITH FIRE STATION PRIOR TO WORK ON DRIVEWAYS AND MAINTAIN ACCESS AS REQUESTED.

CONTRACTOR SHALL INSTALL TEMPORARY DRIVEWAY TO MAINTAIN ACCESS TO PROPERTY AT ALL TIMES. ONCE PROPOSED DRIVEWAY IS COMPLETE, CONTRACTOR SHALL REMOVE TEMPORARY DRIVEWAY AND RESTORE AREA TO PREVIOUS CONDITION.

ONLY
R3-5R 30" X 12"

295' TAPER | 155'

W. OLD SETTLER'S BLVD

SAM BASS RD

RIGHT LANE CLOSED
CW20-5TR 36" X 36"

XXX FT
CW16-3aP 24"x12"

ROAD WORK AHEAD
CW20-1D 36" X 36"

END ROAD WORK
G20-2 36"x18"

3' MIN | 11'-22' | 12' | 11' | 0'-10' | 3' MIN

WATER FILLED BARRIERS. REFER TO TRAFFIC CONTROL GENERAL NOTE 12 ON SHEET 14.

SECTION B-B
NTS

WYOMING SPRINGS
SEGMENT 1
ROUND ROCK, TX

ROUND ROCK TEXAS

halff
13620 BRANTWICK DR
BLDG C, STE 100
AUSTIN, TX 78729
(512) 777-4600
TBPELS FIRM #312

No.	Revision	Date	Description

STATE OF TEXAS
MELANIE S. CLEAVELIN
108945
LICENSED
PROFESSIONAL ENGINEER
4/5/23

THE SEAL APPEARING ON THIS DOCUMENT WAS AUTHORIZED BY MELANIE S. CLEAVELIN, P.E. 108945 ON 4/5/2023. ALTERATION OF A SEALED DOCUMENT WITHOUT PROPER AUTHORITY TO DO SO IS UNLAWFUL AND PUNISHABLE AS AN OFFENSE UNDER THE TEXAS ENGINEERING PRACTICE ACT. THE RECORD COPY OF THIS DRAWING IS ON FILE AT THE OFFICES OF HALFF ASSOCIATES, INC., 1201 NORTH BOWSER RD, RICHARDSON, TEXAS, 75081 / TBPE FIRM #F-312.

100% SUBMITTAL

Project No.:	36179.002
Issued:	4/6/2023
Drawn By:	TM
Checked By:	MC
Scale:	1"=100'

Sheet Title
TRAFFIC CONTROL PLAN
(2 OF 2)

18
Sheet Number

DISCLAIMER:
The use of this standard is governed by the "Texas Engineering Practice Act". No warranty of any kind is made by TxDOT for any purpose whatsoever. TxDOT assumes no responsibility for the conversion of this standard to other formats or for incorrect results or damages resulting from its use.

DATE:
FILE:

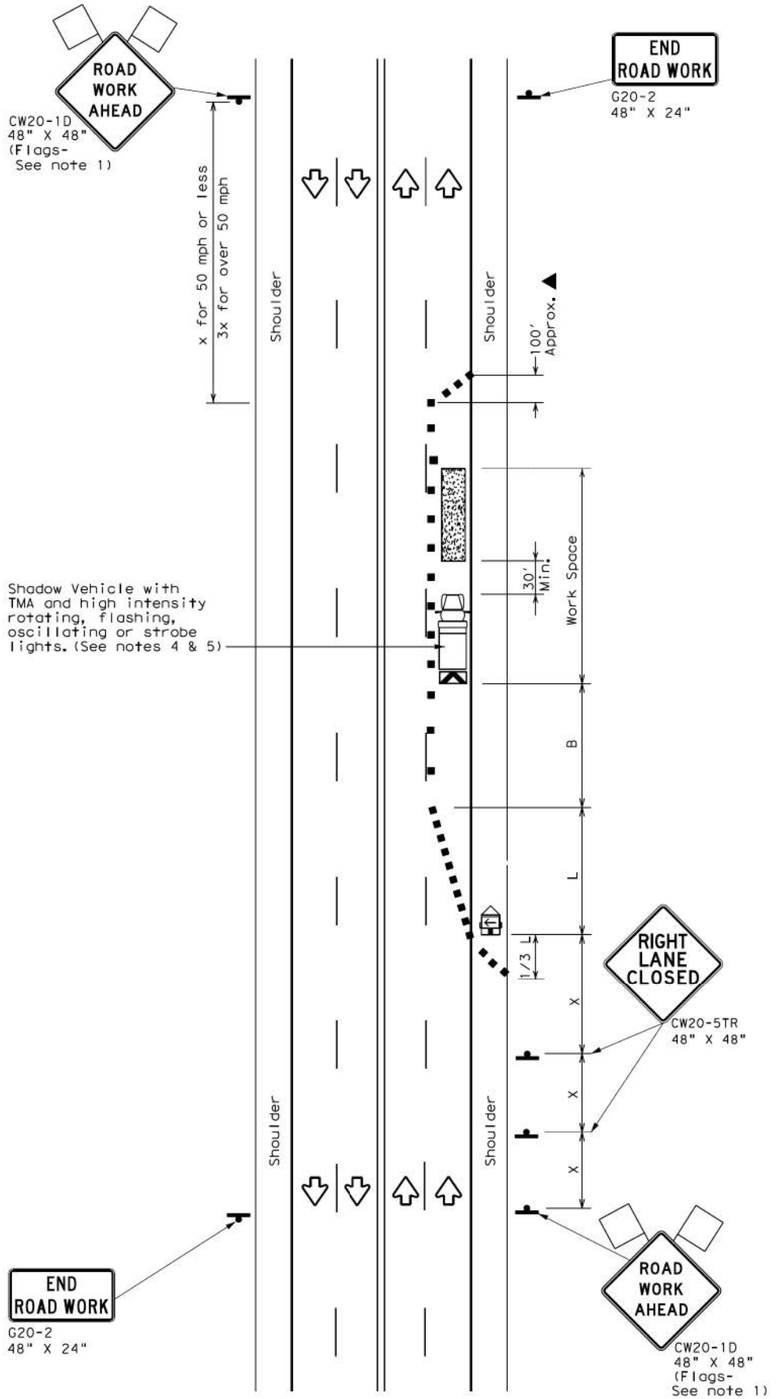

TCP (1-4a)

ONE LANE CLOSED

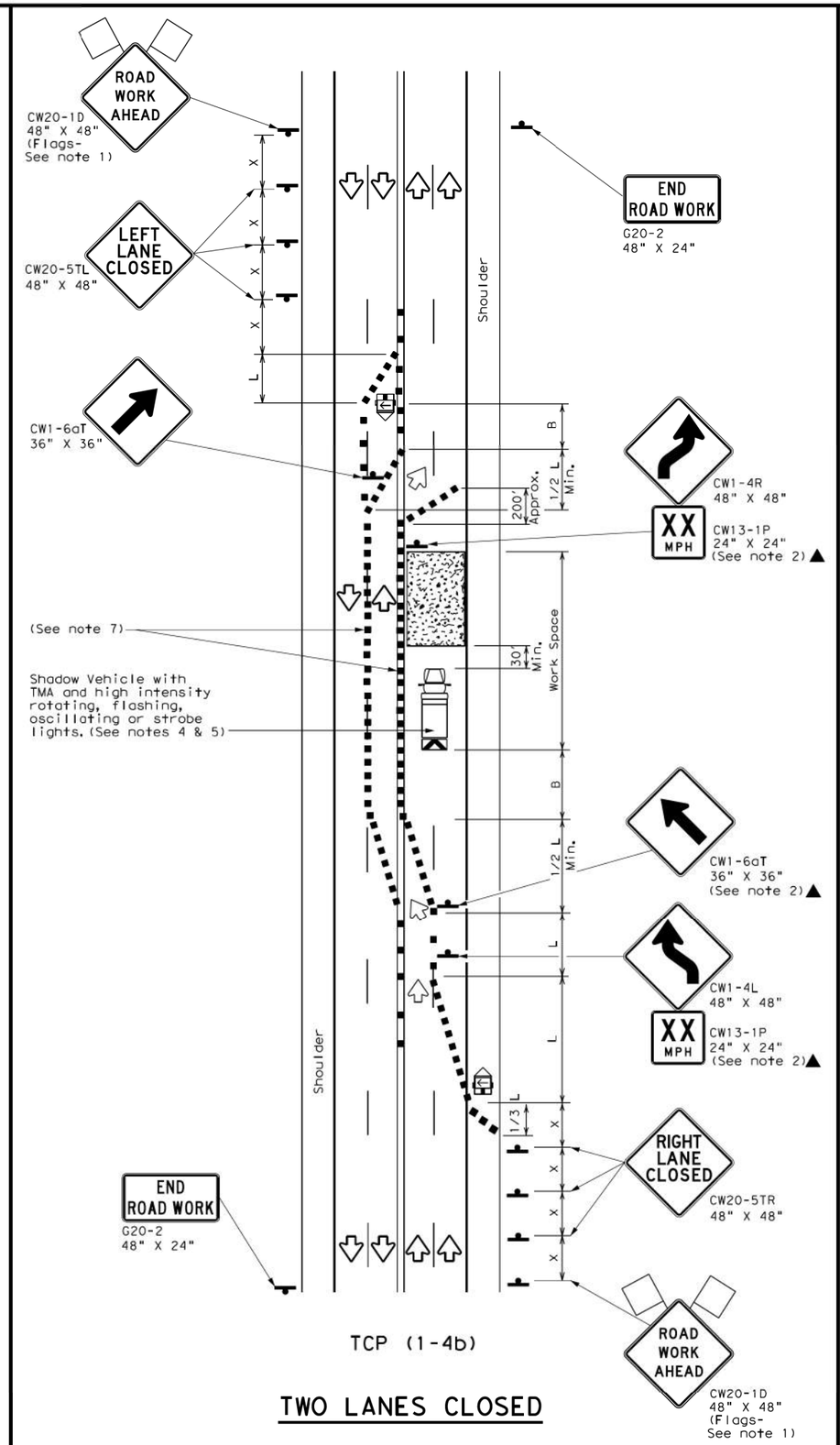

TCP (1-4b)

TWO LANES CLOSED

LEGEND			
	Type 3 Barricade		Channelizing Devices
	Heavy Work Vehicle		Truck Mounted Attenuator (TMA)
	Trailer Mounted Flashing Arrow Board	M	Portable Changeable Message Sign (PCMS)
	Sign		Traffic Flow
	Flag		Flagger

Posted Speed *	Formula	Minimum Desirable Taper Lengths ** 10' Offset	11' Offset	12' Offset	Suggested Maximum Spacing of Channelizing Devices On a Taper	On a Tangent	Minimum Sign Spacing "X" Distance	Suggested Longitudinal Buffer Space "B"
30	$L=\frac{WS^2}{60}$	150'	165'	180'	30'	60'	120'	90'
35		205'	225'	245'	35'	70'	160'	120'
40		265'	295'	320'	40'	80'	240'	155'
45	L=WS	450'	495'	540'	45'	90'	320'	195'
50		500'	550'	600'	50'	100'	400'	240'
55		550'	605'	660'	55'	110'	500'	295'
60		600'	660'	720'	60'	120'	600'	350'
65		650'	715'	780'	65'	130'	700'	410'
70		700'	770'	840'	70'	140'	800'	475'
75		750'	825'	900'	75'	150'	900'	540'

* Conventional Roads Only
** Taper lengths have been rounded off.
L=Length of Taper(FT) W=Width of Offset(FT) S=Posted Speed(MPH)

TYPICAL USAGE				
MOBILE	SHORT DURATION	SHORT TERM STATIONARY	INTERMEDIATE TERM STATIONARY	LONG TERM STATIONARY
	✓	✓		

GENERAL NOTES

1. Flags attached to signs where shown are REQUIRED.
2. All traffic control devices illustrated are REQUIRED, except those denoted with the triangle symbol may be omitted when stated elsewhere in the plans, or for routine maintenance work, when approved by the Engineer.
3. The CW20-1D "ROAD WORK AHEAD" sign may be repeated if the visibility of the work zone is less than 1500 feet.
4. A Shadow Vehicle with a TMA should be used anytime it can be positioned 30 to 100 feet in advance of the area of crew exposure without adversely affecting the performance or quality of the work. If workers are no longer present but road or work conditions require the traffic control to remain in place, Type 3 Barricades or other channelizing devices may be substituted for the Shadow Vehicle and TMA.
5. Additional Shadow Vehicles with TMAs may be positioned off the paved surface, next to those shown in order to protect wider work spaces.

TCP (1-4a)

6. If this TCP is used for a left lane closure , CW20-5TL "LEFT LANE CLOSED" signs shall be used and channelizing devices shall be placed on the centerline where needed to protect the work space from opposing traffic with the arrow panel placed in the closed lane near the end of the merging taper.

TCP (1-4b)

7. Where traffic is directed over a yellow centerline, channelizing devices which separate two-way traffic should be spaced on tapers at 20' or 15' if posted speeds are 35 mph or slower, and for tangent sections, at 1/2S where S is the speed in mph. This tighter device spacing is intended for the areas of conflicting markings, not the entire work zone.

Texas Department of Transportation

Traffic Operations Division Standard

TRAFFIC CONTROL PLAN LANE CLOSURES ON MULTILANE CONVENTIONAL ROADS

TCP(1-4)-18

FILE: tcp1-4-18.dgn	DN:	CK:	DW:	CK:
© TxDOT December 1985	CONT	SECT	JOB	HIGHWAY
REVISIONS 2-94 4-98 / 8-95 2-12 / 1-97 2-18	DIST	COUNTY		SHEET NO. 19

DISCLAIMER:
The use of this standard is governed by the "Texas Engineering Practice Act". No warranty of any kind is made by TxDOT for any purpose whatsoever. TxDOT assumes no responsibility for the conversion of this standard to other formats or for incorrect results or damages resulting from its use.

DATE:
FILE:

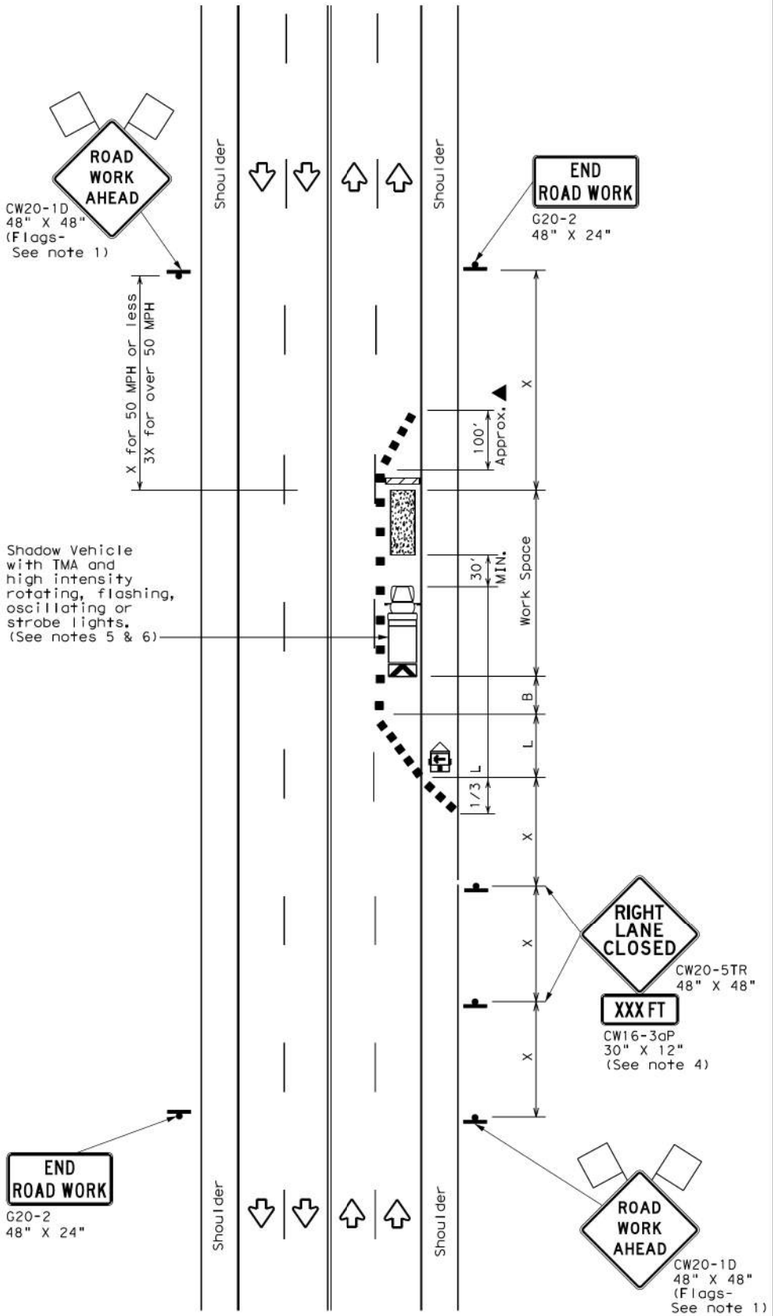

TCP (2-4a)

ONE LANE CLOSED

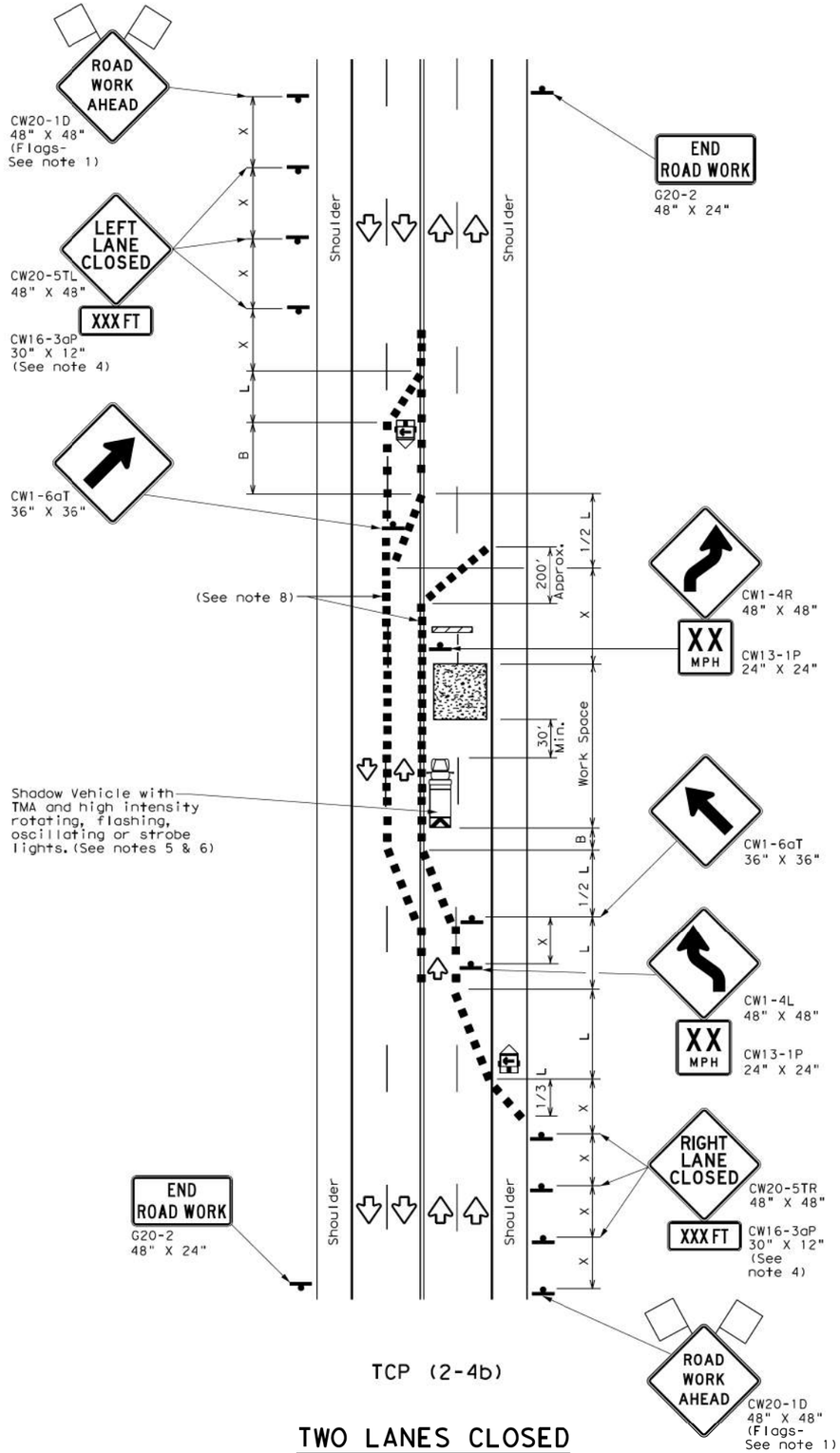

TCP (2-4b)

TWO LANES CLOSED

LEGEND			
	Type 3 Barricade		Channelizing Devices
	Heavy Work Vehicle		Truck Mounted Attenuator (TMA)
	Trailer Mounted Flashing Arrow Board	M	Portable Changeable Message Sign (PCMS)
	Sign		Traffic Flow
	Flag		Flagger

Posted Speed *	Formula	Minimum Desirable Taper Lengths ** 10' Offset	11' Offset	12' Offset	Suggested Maximum Spacing of Channelizing Devices On a Taper	On a Tangent	Minimum Sign Spacing "X" Distance	Suggested Longitudinal Buffer Space "B"
30	$L=\frac{WS^2}{60}$	150'	165'	180'	30'	60'	120'	90'
35		205'	225'	245'	35'	70'	160'	120'
40		265'	295'	320'	40'	80'	240'	155'
45	L=WS	450'	495'	540'	45'	90'	320'	195'
50		500'	550'	600'	50'	100'	400'	240'
55		550'	605'	660'	55'	110'	500'	295'
60		600'	660'	720'	60'	120'	600'	350'
65		650'	715'	780'	65'	130'	700'	410'
70		700'	770'	840'	70'	140'	800'	475'
75		750'	825'	900'	75'	150'	900'	540'

* Conventional Roads Only

** Taper lengths have been rounded off.
L=Length of Taper(FT) W=Width of Offset(FT) S=Posted Speed(MPH)

TYPICAL USAGE				
MOBILE	SHORT DURATION	SHORT TERM STATIONARY	INTERMEDIATE TERM STATIONARY	LONG TERM STATIONARY
		✓	✓	

GENERAL NOTES

1. Flags attached to signs where shown, are REQUIRED.
2. All traffic control devices illustrated are REQUIRED, except those denoted with the triangle symbol may be omitted when stated elsewhere in the plans, or for routine maintenance work, when approved by the Engineer.
3. The downstream taper is optional. When used, it should be 100 feet minimum length per lane.
4. For short term applications, when post mounted signs are not used, the distance legend may be shown on the sign face rather than on a CW16-3aP supplemental plaque.
5. A Shadow Vehicle with a TMA should be used anytime it can be positioned 30 to 100 feet in advance of the area of crew exposure without adversely affecting the performance or quality of the work. If workers are no longer present but road or work conditions require the traffic control to remain in place, Type 3 Barricades or other channelizing devices may be substituted for the Shadow Vehicle and TMA.
6. Additional Shadow Vehicles with TMAs may be positioned in each closed lane, on the shoulder or off the paved surface, next to those shown in order to protect a wider work space.

TCP (2-4a)

7. If this TCP is used for a left lane closure, CW20-5TL "LEFT LANE CLOSED"signs shall be used and channelizing devices shall be placed on the centerline to protect the work space from opposing traffic with the arrow board placed in the closed lane near the end of the merging taper.

TCP (2-4b)

8. For shorter durations where traffic is directed over a yellow centerline, channelizing devices which separate two-way traffic should be spaced on tapers at 20' or 15' if posted speeds are 35 mph or slower, and for tangent sections, at 1/2(S) where S is the speed in mph. This tighter devices spacing is intended for the area of conflicting markings, not the entire work zone.

Texas Department of Transportation

Traffic Operations Division Standard

TRAFFIC CONTROL PLAN LANE CLOSURES ON MULTILANE CONVENTIONAL ROADS

TCP(2-4)-18

FILE: tcp2-4-18.dgn	DN:	CK:	DW:	CK:
© TxDOT December 1985	CONT	SECT	JOB	HIGHWAY
REVISIONS 8-95 3-03				
1-97 2-12	DIST	COUNTY		SHEET NO.
4-98 2-18				20

DISCLAIMER:
The use of this standard is governed by the "Texas Engineering Practice Act". No warranty of any kind is made by TxDOT for any purpose whatsoever. TxDOT assumes no responsibility for the conversion of this standard to other formats or for incorrect results or damages resulting from its use.

DATE:
FILE:

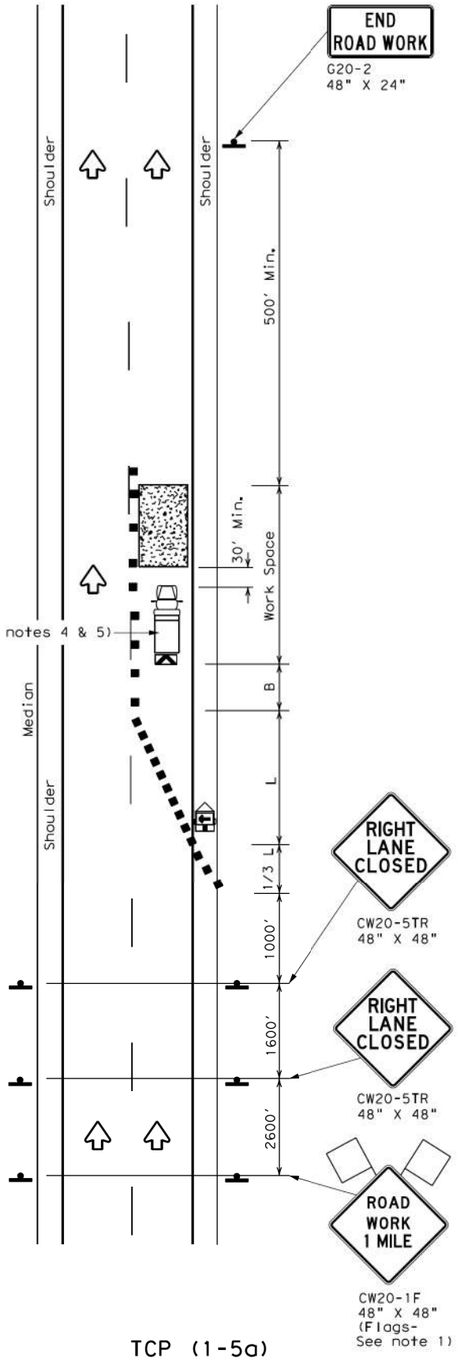

TCP (1-5a)

ONE LANE CLOSURE

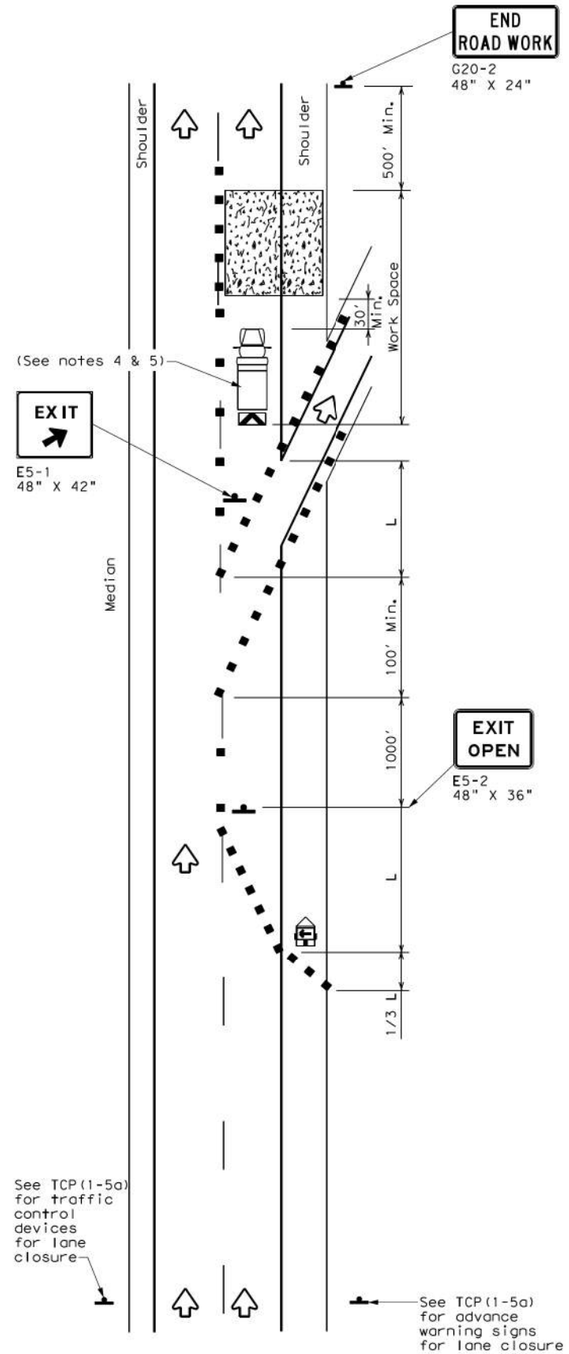

TCP (1-5b)

LANE CLOSURE NEAR EXIT RAMPS

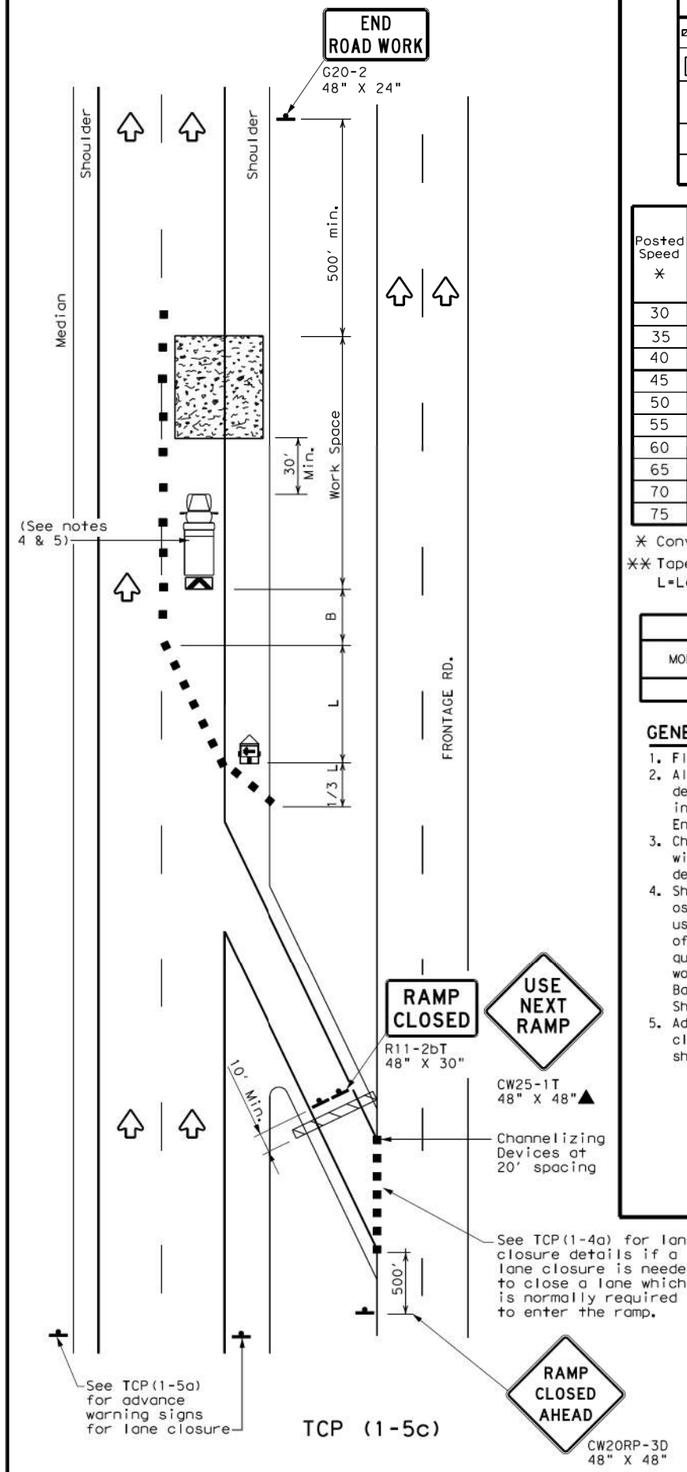

TCP (1-5c)

LANE CLOSURE NEAR ENTRANCE RAMPS

LEGEND			
	Type 3 Barricade		Channelizing Devices
	Heavy Work Vehicle		Truck Mounted Attenuator (TMA)
	Trailer Mounted Flashing Arrow Board	M	Portable Changeable Message Sign (PCMS)
	Sign		Traffic Flow
	Flag		Flagger

Posted Speed *	Formula	Minimum Desirable Taper Lengths ** 10' Offset	11' Offset	12' Offset	Suggested Maximum Spacing of Channelizing Devices: On a Taper	On a Tangent	Minimum Sign Spacing "X" Distance	Suggested Longitudinal Buffer Space "B"
30	$L=\frac{WS^2}{60}$	150'	165'	180'	30'	60'	120'	90'
35		205'	225'	245'	35'	70'	160'	120'
40		265'	295'	320'	40'	80'	240'	155'
45	L=WS	450'	495'	540'	45'	90'	320'	195'
50		500'	550'	600'	50'	100'	400'	240'
55		550'	605'	660'	55'	110'	500'	295'
60		600'	660'	720'	60'	120'	600'	350'
65		650'	715'	780'	65'	130'	700'	410'
70		700'	770'	840'	70'	140'	800'	475'
75		750'	825'	900'	75'	150'	900'	540'

* Conventional Roads Only

** Taper lengths have been rounded off.
L=Length of Taper(FT) W=Width of Offset(FT) S=Posted Speed(MPH)

TYPICAL USAGE				
MOBILE	SHORT DURATION	SHORT TERM STATIONARY	INTERMEDIATE TERM STATIONARY	LONG TERM STATIONARY
		✓		

GENERAL NOTES

1. Flags attached to signs where shown, are REQUIRED.
2. All traffic control devices illustrated are REQUIRED, except those denoted with the triangle symbol may be omitted when stated elsewhere in the plans, or for routine maintenance work, when approved by the Engineer.
3. Channelizing devices used to close lanes may be supplemented with the Chevron Alignment Sign placed on every other channelizing device. Chevrons may be attached to plastic drums as per BC Standards.
4. Shadow Vehicle with TMA and high intensity rotating, flashing, oscillating or strobe lights. A Shadow Vehicle with a TMA should be used anytime it can be positioned 30 to 100 feet in advance of the area of crew exposure without adversely affecting the performance or quality of the work. If workers are no longer present but road or work conditions require the traffic control to remain in place, Type 3 Barricades or other channelizing devices may be substituted for the Shadow Vehicle and TMA.
5. Additional Shadow Vehicles with TMAs may be positioned in each closed lane, on the shoulder or off the paved surface, next to those shown in order to protect a wider work space.

Texas Department of Transportation

Traffic Operations Division Standard

TRAFFIC CONTROL PLAN LANE CLOSURES FOR DIVIDED HIGHWAYS

TCP(1-5)-18

FILE: tcp1-5-18.dgn	DN:	CK:	DW:	CK:
©TxDOT February 2012	CONT	SECT	JOB	HIGHWAY
REVISIONS 2-18				
	DIST	COUNTY		SHEET NO. 21

DISCLAIMER:
The use of this standard is governed by the "Texas Engineering Practice Act". No warranty of any kind is made by TxDOT for any purpose whatsoever. TxDOT assumes no responsibility for the conversion of this standard to other formats or for incorrect results or damages resulting from its use.

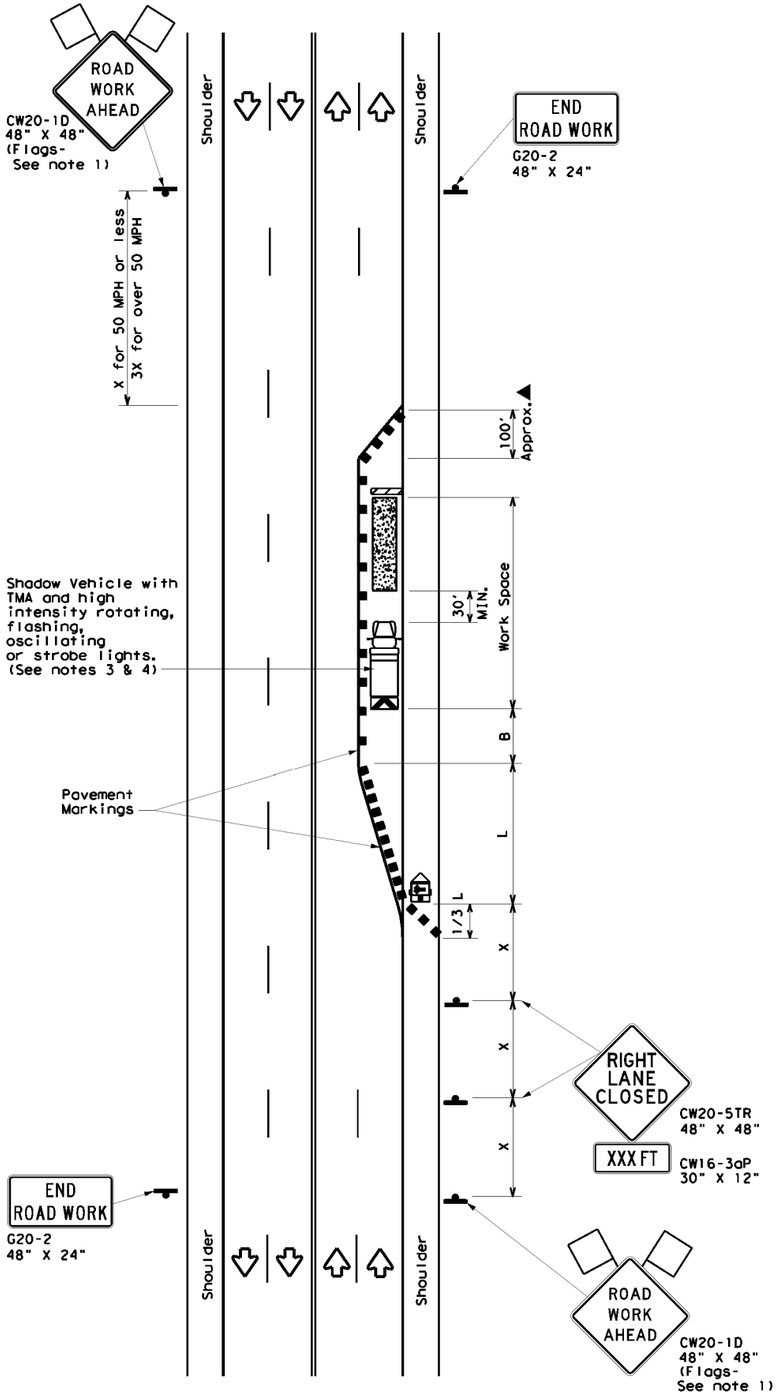

TCP (2-5a)

ONE LANE CLOSED

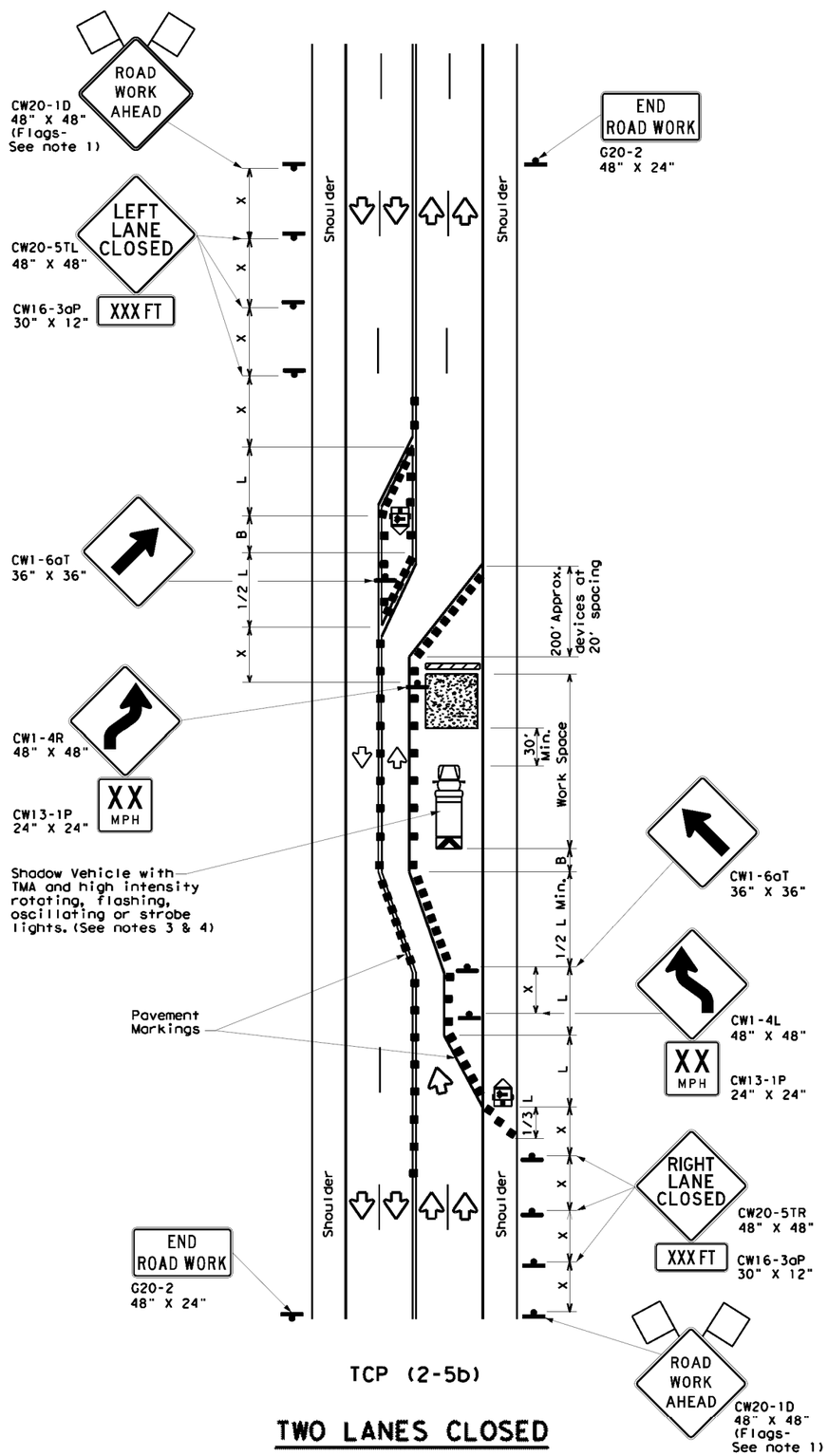

TCP (2-5b)

TWO LANES CLOSED

LEGEND

	Type 3 Barricade		Channelizing Devices
	Heavy Work Vehicle		Truck Mounted Attenuator (TMA)
	Trailer Mounted Flashing Arrow Board	M	Portable Changeable Message Sign (PCMS)
	Sign		Traffic Flow
	Flag		Flagger

Posted Speed *	Formula	Minimum Desirable Taper Lengths ** 10' Offset	11' Offset	12' Offset	Suggested Maximum Spacing of Channelizing Devices On a Taper	On a Tangent	Minimum Sign Spacing "X" Distance	Suggested Longitudinal Buffer Space "B"
30	$L=\frac{WS^2}{60}$	150'	165'	180'	30'	60'	120'	90'
35		205'	225'	245'	35'	70'	160'	120'
40		265'	295'	320'	40'	80'	240'	155'
45	L=WS	450'	495'	540'	45'	90'	320'	195'
50		500'	550'	600'	50'	100'	400'	240'
55		550'	605'	660'	55'	110'	500'	295'
60		600'	660'	720'	60'	120'	600'	350'
65		650'	715'	780'	65'	130'	700'	410'
70		700'	770'	840'	70'	140'	800'	475'
75		750'	825'	900'	75'	150'	900'	540'

* Conventional Roads Only

** Taper lengths have been rounded off.
L=Length of Taper(FT) W=Width of Offset(FT) S=Posted Speed(MPH)

TYPICAL USAGE

MOBILE	SHORT DURATION	SHORT TERM STATIONARY	INTERMEDIATE TERM STATIONARY	LONG TERM STATIONARY
			✓	✓

GENERAL NOTES

1. Flags attached to signs where shown, are REQUIRED.
2. All traffic control devices illustrated are REQUIRED, except those denoted with the triangle symbol may be omitted when stated elsewhere in the plans, or for routine maintenance work, when approved by the Engineer.
3. A Shadow Vehicle with a TMA should be used anytime it can be positioned 30 to 100 feet in advance of the area of crew eposure without adversely affecting the performance or quality of the work. If workers are no longer present but road or work conditions require the traffic control to remain in place, Type 3 Barricades or other channelizing devices may be substitutued for the Shadow Vehicle and TMA.
4. Additional Shadow Vehicles with TMAs may be positioned in each closed lane, on the shoulder or off the paved surface, next to those shown in order to protect a wider work space.
5. The downstream taper is optional. When used, it should be 100 feet approximately per lane, with channelizing devices spaced at 20 feet.

TCP (2-5a)

6. If this TCP is used for a left lane closure, CW20-5TL "LEFT LANE CLOSED" signs shall be used and channelizing devices shall be placed on the centerline to protect the work space from opposing traffic, with the arrow board placed in the closed lane near the end of the merging taper.

TCP (2-5b)

7. Conflicting pavement markings shall be removed for long-term projects.

Texas Department of Transportation

Traffic Operations Division Standard

TRAFFIC CONTROL PLAN LONG TERM LANE CLOSURES MULTILANE CONVENTIONAL RDS.

TCP(2-5)-18

FILE: tcp2-5-18.dgn	DN:	CK:	DW:	CK:
© TxDOT December 1985	CONT	SECT	JOB	HIGHWAY
REVISIONS 8-95 2-12				
1-97 3-03	DIST	COUNTY		SHEET NO.
4-98 2-18				22

DATE:
FILE:

DISCLAIMER:
The use of this standard is governed by the "Texas Engineering Practice Act". No warranty of any kind is made by TxDOT for any purpose whatsoever. TxDOT assumes no responsibility for the conversion of this standard to other formats or for incorrect results or damages resulting from its use.

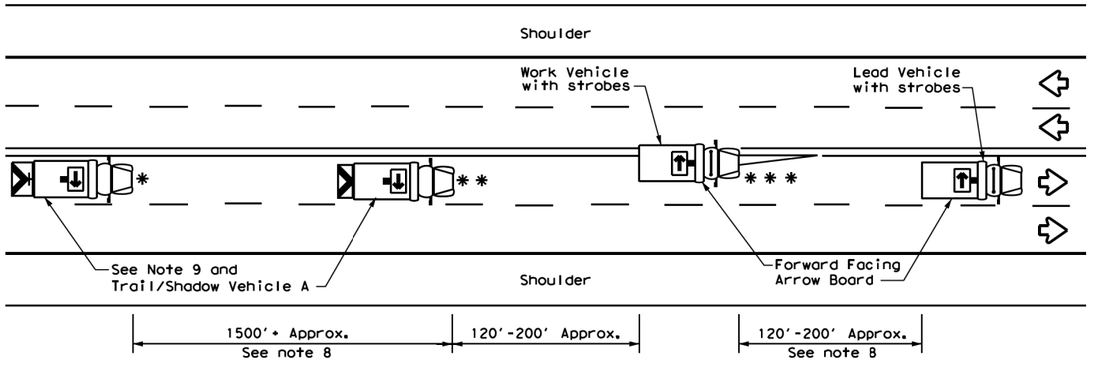

TCP (3-1a)

UNDIVIDED MULTILANE ROADWAY

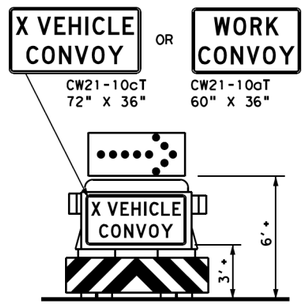

TRAIL/SHADOW VEHICLE A

with RIGHT Directional display Flashing Arrow Board

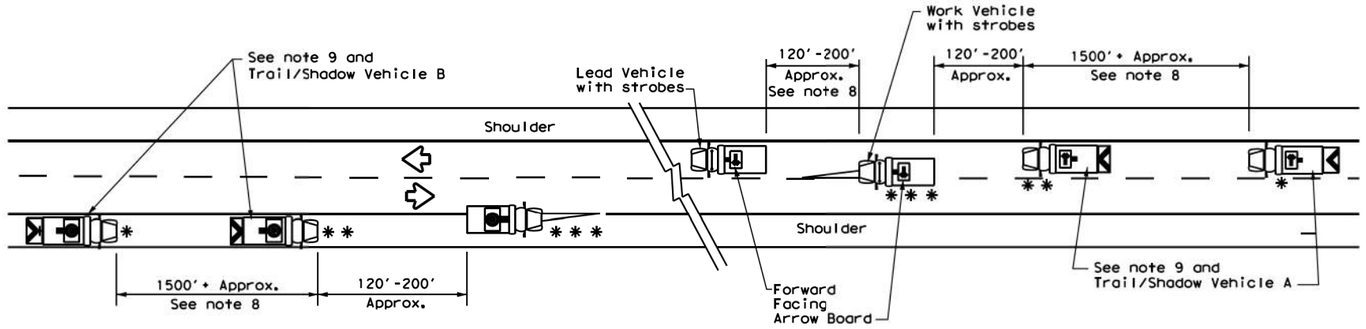

WORK ON SHOULDER

WORK ON TRAVEL LANE

TCP (3-1b)

TWO-WAY ROADWAY WITH PAVED SHOULDERS

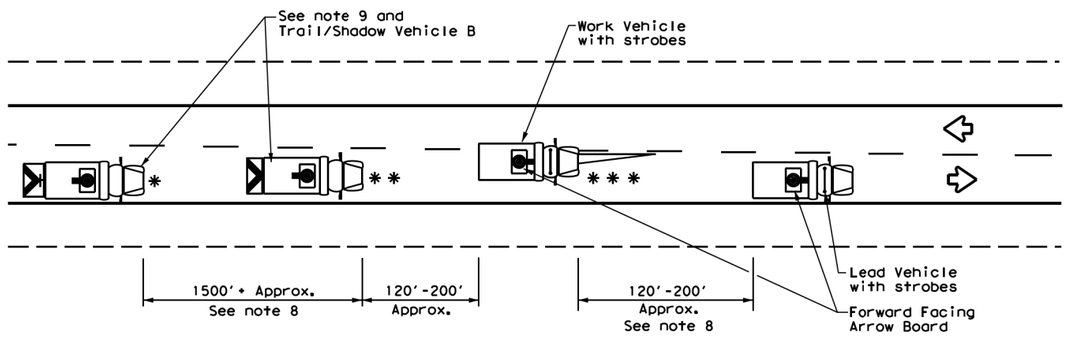

TCP (3-1c)

TWO-WAY ROADWAY WITHOUT PAVED SHOULDERS

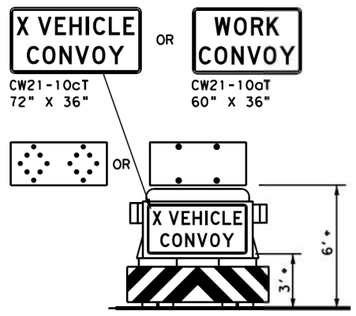

TRAIL/SHADOW VEHICLE B

with Flashing Arrow Board in CAUTION display

LEGEND			
*	Trail Vehicle	ARROW BOARD DISPLAY	
**	Shadow Vehicle		
***	Work Vehicle		RIGHT Directional
	Heavy Work Vehicle		LEFT Directional
	Truck Mounted Attenuator (TMA)		Double Arrow
	Traffic Flow		CAUTION (Alternating Diamond or 4 Corner Flash)

TYPICAL USAGE				
MOBILE	SHORT DURATION	SHORT TERM STATIONARY	INTERMEDIATE TERM STATIONARY	LONG TERM STATIONARY
✓				

GENERAL NOTES

1. TRAIL, SHADOW, and LEAD vehicles shall be equipped with arrow boards as illustrated. When a LEAD vehicle is not used the WORK vehicle must be equipped with an arrow board. The Engineer will determine if the LEAD VEHICLE and/or TRAIL VEHICLE are required based on prevailing roadway conditions, traffic volume, and sight distance restrictions.
2. The use of amber high intensity rotating, flashing, oscillating, or strobe lights on vehicles are required. Blue high intensity rotating, flashing, oscillating or strobe lights when mounted on the driver's side of the vehicle may be operated simultaneously with the amber beacons or strobe lights.
3. The use of truck mounted attenuators (TMA) on the SHADOW VEHICLE and TRAIL VEHICLE are required.
4. Reflective sheeting on the rear of the TMA shall meet or exceed the reflectivity and color requirements of DEPARTMENTAL MATERIAL SPECIFICATION DMS 8300, Type A.
5. Flashing arrow boards shall be Type B or Type C as per the Barricade and Construction (BC) standards. The board shall be controlled from inside the vehicle.
6. Each vehicle shall have two-way radio communication capability.
7. When work convoys must change lanes, the TRAIL VEHICLE should change lanes first to shadow the other convoy vehicles.
8. Vehicle spacing between the TRAIL VEHICLE and the SHADOW VEHICLE will vary depending on sight distance restrictions. Motorists approaching the work convoy should be able to see the TRAIL VEHICLE in time to slow down and/or change lanes as they approach the TRAIL VEHICLE. Vehicle spacing between the WORK VEHICLE and SHADOW VEHICLE and vehicle spacing between WORK VEHICLE and LEAD VEHICLE may vary according to terrain, work activity and other factors.
9. "X VEHICLE CONVOY" (CW21-10cT) or "WORK CONVOY" (CW21-10aT) signs shall be used on TRAIL VEHICLES and SHADOW VEHICLES as shown. As an option 48" X 48" diamond shaped "WORK CONVOY"(CW21-10T) or "X VEHICLE CONVOY" (CW21-10bT) signs may be used where adequate mounting space exists. When used, the X VEHICLE CONVOY sign shall have the number of the convoy vehicles displayed on the sign in the number designation "X" location. The "X VEHICLE CONVOY" sign shall not be used on the SHADOW VEHICLE if a TRAIL VEHICLE is used.
10. On two-lane two-way roadways, the work and protection vehicles should pull over periodically to allow motor vehicle traffic to pass. If motorists are not allowed to pass the work convoy, a "DO NOT PASS" (R4-1) sign should be placed on the back of the rearmost protection vehicle.

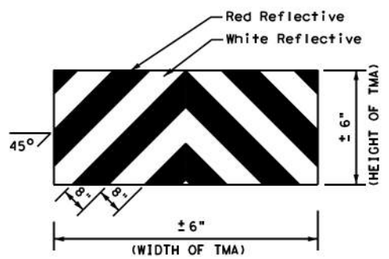

STRIPING FOR TMA

Texas Department of Transportation

Traffic Operations Division Standard

TRAFFIC CONTROL PLAN MOBILE OPERATIONS UNDIVIDED HIGHWAYS

TCP(3-1)-13

FILE: tcp3-1.dgn	DN: TxDOT	CK: TxDOT	DW: TxDOT	CK: TxDOT
©TxDOT December 1985	CONT	SECT	JOB	HIGHWAY
REVISIONS 2-94 4-98 8-95 7-13 1-97	DIST	COUNTY		SHEET NO. 23

DATE:
FILE:

DISCLAIMER:
The use of this standard is governed by the "Texas Engineering Practice Act". No warranty of any kind is made by TxDOT for any purpose whatsoever. TxDOT assumes no responsibility for the conversion of this standard to other formats or for incorrect results or damages resulting from its use.

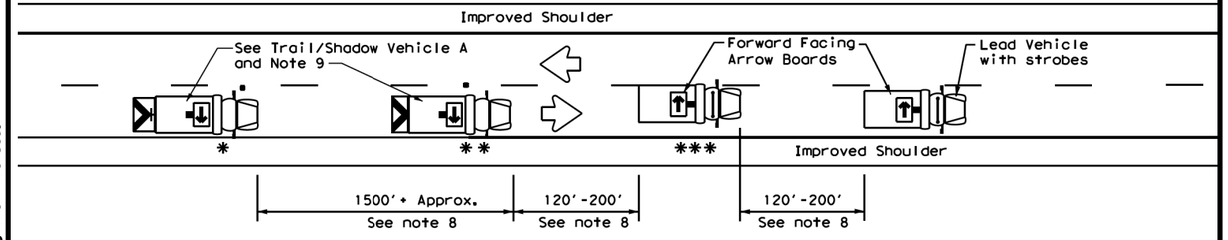

TCP (3-3a)

TWO LANE HIGHWAY WITH PAVED SHOULDERS
(WORK ON TRAVEL LANE)

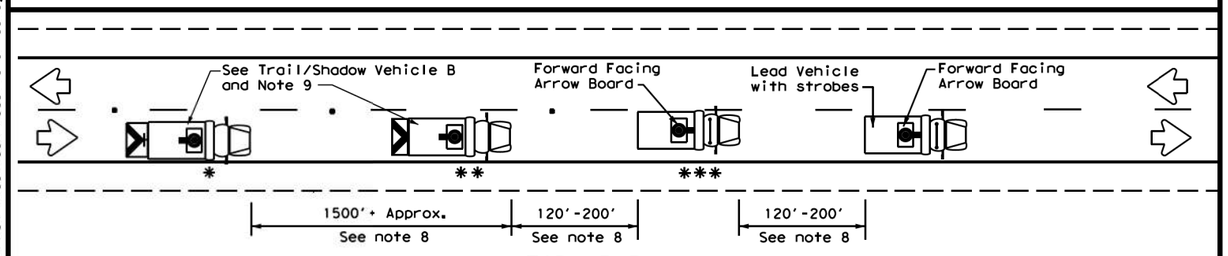

TCP (3-3b)

TWO LANE HIGHWAY WITHOUT PAVED SHOULDERS
(WORK ON TRAVEL LANE)

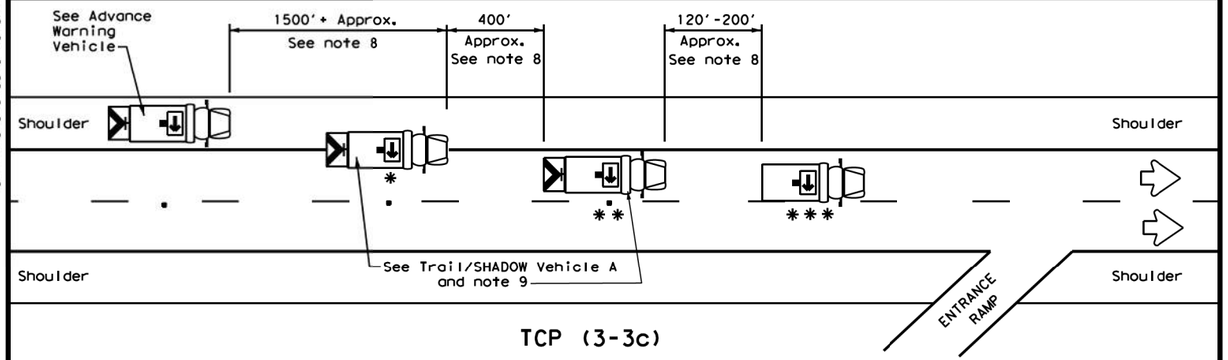

TCP (3-3c)

DIVIDED MULTILANE HIGHWAY

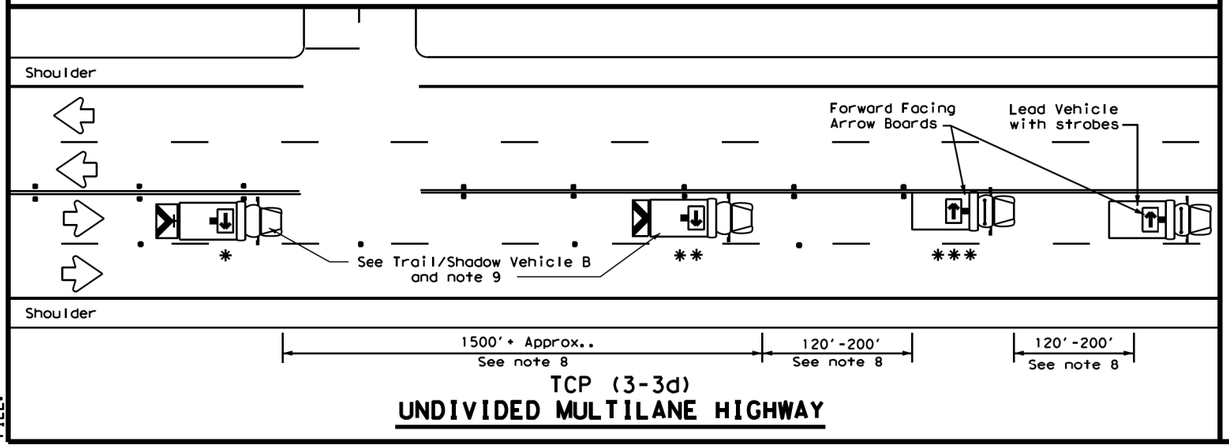

TCP (3-3d)

UNDIVIDED MULTILANE HIGHWAY

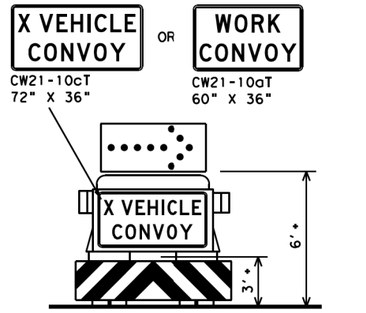

TRAIL/SHADOW VEHICLE A

with RIGHT Directional display
Flashing Arrow Board

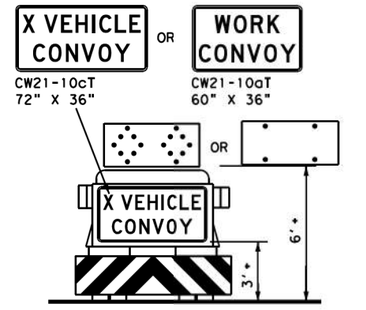

TRAIL/SHADOW VEHICLE B

with Flashing Arrow Board
in Caution Mode

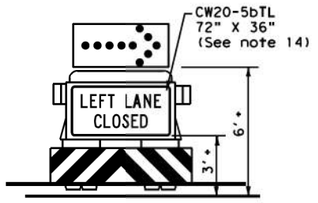

ADVANCE WARNING VEHICLE

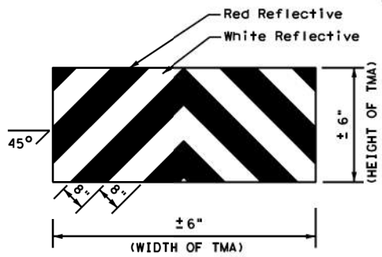

STRIPING FOR TMA

LEGEND			
*	Trail Vehicle	ARROW BOARD DISPLAY	
**	Shadow Vehicle		
***	Work Vehicle		RIGHT Directional
	Heavy Work Vehicle		LEFT Directional
	Truck Mounted Attenuator (TMA)		Double Arrow
	Traffic Flow		CAUTION (Alternating Diamond or 4 Corner Flash)

TYPICAL USAGE				
MOBILE	SHORT DURATION	SHORT TERM STATIONARY	INTERMEDIATE TERM STATIONARY	LONG TERM STATIONARY
✓				

GENERAL NOTES

1. TRAIL, SHADOW, and LEAD vehicles shall be equipped with arrow boards as illustrated. When a LEAD vehicle is not used on two way roads the WORK vehicle must have an arrow board. For divided roadways, the arrow board on the WORK vehicle is optional based on the type of work being performed. The Engineer will determine if the LEAD vehicle and/or TRAIL vehicle are required based on prevailing roadway conditions, traffic volume, and sight distance restrictions.
2. The use of amber high intensity rotating, flashing, oscillating, or strobe lights on vehicles are required. Blue high intensity rotating, flashing, oscillating, or strobe lights when mounted on the driver's side of the vehicle may be operated simultaneously with the amber beacons or strobe lights.
3. The use of truck mounted attenuators (TMA) on the SHADOW VEHICLE, ADVANCE WARNING and TRAIL VEHICLE are required.
4. Reflective sheeting on the rear of the TMA shall meet or exceed the reflectivity and color requirements of DEPARTMENTAL MATERIAL SPECIFICATION DMS 8300, Type A.
5. Flashing arrow boards shall be Type B or Type C as per the Barricade and Construction (BC) standards. The board shall be controlled from inside the vehicle.
6. Each vehicle shall have two-way radio communication capability.
7. When work convoys must change lanes, the TRAIL VEHICLE should change lanes first to shadow the other convoy vehicles.
8. Vehicle spacing between the TRAIL VEHICLE and the SHADOW VEHICLE will vary depending on sight distance restrictions. Motorists approaching the convoy should be able to see the TRAIL VEHICLE in time to slow down and/or change lanes as they approach the TRAIL VEHICLE. Vehicle spacing between the WORK VEHICLE and SHADOW VEHICLE and vehicle spacing between WORK VEHICLE and LEAD VEHICLE may vary according to terrain, work activity and other factors.
9. X VEHICLE CONVOY (CW21-10cT) or WORK CONVOY (CW21-10aT) signs shall be used on TRAIL VEHICLES and SHADOW VEHICLES as shown. As an option 48" x 48" diamond shaped WORK CONVOY (CW21-10T) or X VEHICLE CONVOY (CW21-10bT) signs may be used where adequate mounting space exists. When used, the X VEHICLE CONVOY sign shall have the number of the convoy vehicles displayed on the sign in the number designation "X" location. The X VEHICLE CONVOY sign shall not be used on the SHADOW VEHICLE if a TRAIL VEHICLE is used.
10. For divided highways with two or three lanes in one direction, the appropriate LEFT LANE CLOSED (CW20-5bTL), RIGHT LANE CLOSED (CW20-5bTR), or CENTER LANE CLOSED (CW20-5dT) sign should be used on the Advance Warning Vehicle. As an option, a portable changeable message sign (PCMS) or truck mounted changeable message sign (TMCMS) with a minimum character height of 12", and displaying the same legend may be substituted for these signs. An appropriate directional arrow display, simulating the size and legibility of the flashing arrow board may be used in the second phase of the PCMS/TMCMS message. When this is done, the arrow board will not be required on the Advance Warning Vehicle.
11. A double arrow shall not be displayed on the arrow board on the Advance Warning Vehicle.
12. For divided highways with three or four lanes in each direction, use TCP(3-2).
13. Standard diamond shape versions of the CW20-5 series signs may be used as an option if the rectangular signs shown are not available.
14. The Advance Warning Vehicle may straddle the edgeline when Shoulder width makes it necessary.
15. On two-lane two-way roadways, the work and protection vehicles should pull over periodically to allow motor vehicle traffic to pass. If motorists are not allowed to pass the work convoy, a DO NOT PASS (R4-1) sign should be placed on the back of the rearmost protection vehicle.

Texas Department of Transportation

Traffic Operations Division Standard

TRAFFIC CONTROL PLAN
MOBILE OPERATIONS
RAISED PAVEMENT MARKER INSTALLATION/ REMOVAL
TCP(3-3)-14

FILE: tcp3-3.dgn	DN: TxDOT	CK: TxDOT	DW: TxDOT	CK: TxDOT
©TxDOT September 1987	CONT	SECT	JOB	HIGHWAY
REVISIONS				
2-94 4-98	DIST	COUNTY		SHEET NO.
8-95 7-13				24
1-97 7-14				

DATE:
FILE:

DISCLAIMER:
The use of this standard is governed by the "Texas Engineering Practice Act". No warranty of any kind is made by TxDOT for any purpose whatsoever. TxDOT assumes no responsibility for the conversion of this standard to other formats or for incorrect results or damages resulting from its use.

DATE:
FILE:

BARRICADE AND CONSTRUCTION (BC) STANDARD SHEETS GENERAL NOTES:

1. The Barricade and Construction Standard Sheets (BC sheets) are intended to show typical examples for placement of temporary traffic control devices, construction pavement markings, and typical work zone signs. The information contained in these sheets meet or exceed the requirements shown in the "Texas Manual on Uniform Traffic Control Devices" (TMUTCD).

2. The development and design of the Traffic Control Plan (TCP)is the responsibility of the Engineer.

3. The Contractor may propose changes to the TCP that are signed and sealed by a licensed professional engineer for approval. The Engineer may develop, sign and seal Contractor proposed changes.

4. The Contractor is responsible for installing and maintaining the traffic control devices as shown in the plans. The Contractor may not move or change the approximate location of any device without the approval of the Engineer.

5. Geometric design of lane shifts and detours should, when possible, meet the applicable design criteria contained in manuals such as the American Association of State Highway and Transportation Officials (AASHTO), "A Policy on Geometric Design of Highways and Streets," the TxDOT "Roadway Design Manual" or engineering judgment.

6. When projects abut, the Engineer(s) may omit the END ROAD WORK, TRAFFIC FINES DOUBLE, and other advance warning signs if the signing would be redundant and the work areas appear continuous to the motorists. If the adjacent project is completed first, the Contractor shall erect the necessary warning signs as shown on these sheets, the TCP sheets or as directed by the Engineer. The BEGIN ROAD WORK NEXT X MILES sign shall be revised to show appropriate work zone distance.

7. The Engineer may require duplicate warning signs on the median side of divided highways where median width will permit and traffic volumes justify the signing.

8. All signs shall be constructed in accordance with the details found in the "Standard Highway Sign Designs for Texas," latest edition. Sign details not shown in this manual shall be shown in the plans or the Engineer shall provide a detail to the Contractor before the sign is manufactured.

9. The temporary traffic control devices shown in the illustrations of the BC sheets are examples. As necessary, the Engineer will determine the most appropriate traffic control devices to be used.

10. Where highway construction or maintenance work is being undertaken, other than mobile operations as defined by the Texas Manual on Uniform Traffic Control Devices, CSJ limit signs are required. CSJ limit signs are shown on BC(2). The OBEY WARNING SIGNS STATE LAW sign, STAY ALERT TALK OR TEXT LATER and the WORK ZONE TRAFFIC FINES DOUBLE sign with plaque shall be erected in advance of the CSJ limits. The BEGIN ROAD WORK NEXT X MILES, CONTRACTOR and END ROAD WORK signs shall be erected at or near the CSJ limits. For mobile operations, CSJ limit signs are not required.

11. Traffic control devices should be in place only while work is actually in progress or a definite need exists.

12. The Engineer has the final decision on the location of all traffic control devices.

13. Inactive equipment and work vehicles, including workers' private vehicles must be parked away from travel lanes. They should be as close to the right-of-way line as possible, or located behind a barrier or guardrail, or as approved by the Engineer.

WORKER SAFETY NOTES:

1. Workers on foot who are exposed to traffic or to construction equipment within the right-of-way shall wear high-visibility safety apparel meeting the requirements of ISEA "American National Standard for High-Visibility Apparel," or equivalent revisions, and labeled as ANSI 107-2004 standard performance for Class 2 or 3 risk exposure. Class 3 garments should be considered for high traffic volume work areas or night time work.

2. Except in emergency situations, flagger stations shall be illuminated when flagging is used at night.

COMPLIANT WORKZONE TRAFFIC CONTROL DEVICES

1. Only pre-qualified products shall be used. The "Compliant Work Zone Traffic Control Devices List" (CWZTCD) describes pre-qualified products and their sources.

2. Work zone traffic control devices shall be compliant with the Manual for Assessing safety Hardware (MASH).

THE DOCUMENTS BELOW CAN BE FOUND ON-LINE AT http://www.txdot.gov
COMPLIANT WORK ZONE TRAFFIC CONTROL DEVICES LIST (CWZTCD)
DEPARTMENTAL MATERIAL SPECIFICATIONS (DMS)
MATERIAL PRODUCER LIST (MPL)
ROADWAY DESIGN MANUAL - SEE "MANUALS (ONLINE MANUALS)"
STANDARD HIGHWAY SIGN DESIGNS FOR TEXAS (SHSD)
TEXAS MANUAL ON UNIFORM TRAFFIC CONTROL DEVICES (TMUTCD)
TRAFFIC ENGINEERING STANDARD SHEETS

SHEET 1 OF 12

Texas Department of Transportation | Traffic Safety Division Standard

BARRICADE AND CONSTRUCTION GENERAL NOTES AND REQUIREMENTS

BC(1)-21

FILE: bc-21.dgn	DN: TxDOT	CK: TxDOT	DW: TxDOT	CK: TxDOT
©TxDOT November 2002	CONT	SECT	JOB	HIGHWAY
REVISIONS 4-03 7-13 9-07 8-14 5-10 5-21	DIST	COUNTY		SHEET NO. 25

DISCLAIMER:
The use of this standard is governed by the "Texas Engineering Practice Act". No warranty of any kind is made by TxDOT for any purpose whatsoever. TxDOT assumes no responsibility for the conversion of this standard to other formats or for incorrect results or damages resulting from its use.

TYPICAL LOCATION OF CROSSROAD SIGNS

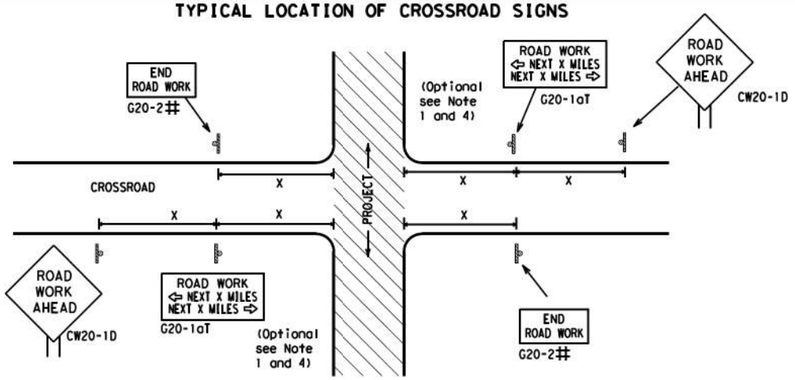

May be mounted on back of "ROAD WORK AHEAD"(CW20-1D) sign with approval of Engineer. (See note 2 below)

1. The typical minimum signing on a crossroad approach should be a "ROAD WORK AHEAD" (CW20-1D)sign and a (G20-2) "END ROAD WORK" sign, unless noted otherwise in plans.
2. The Engineer may use the reduced size 36" x 36" ROAD WORK AHEAD (CW20-1D) sign mounted back to back with the reduced size 36" x 18" "END ROAD WORK"(G20-2) sign on low volume crossroads (see Note 4 under "Typical Construction Warning Sign Size and Spacing"). See the "Standard Highway Sign Designs for Texas" manual for sign details. The Engineer may omit the advance warning signs on low volume crossroads. The Engineer will determine whether a road is low volume as per TMUTCD Part 5. This information shall be shown in the plans.
3. Based on existing field conditions, the Engineer/Inspector may require additional signs such as FLAGGER AHEAD, LOOSE GRAVEL, or other appropriate signs. When additional signs are required, these signs will be considered part of the minimum requirements. The Engineer/Inspector will determine the proper location and spacing of any sign not shown on the BC sheets, Traffic Control Plan sheets or the Work Zone Standard Sheets.
4. The "ROAD WORK NEXT X MILES"(G20-1aT)sign shall be required at high volume crossroads to advise motorists of the length of construction in either direction from the intersection. The Engineer will determine whether a roadway is considered high volume.
5. Additional traffic control devices may be shown elsewhere in the plans for higher volume crossroads.
6. When work occurs in the intersection area, appropriate traffic control devices, as shown elsewhere in the plans or as determined by the Engineer/Inspector, shall be in place.

T-INTERSECTION

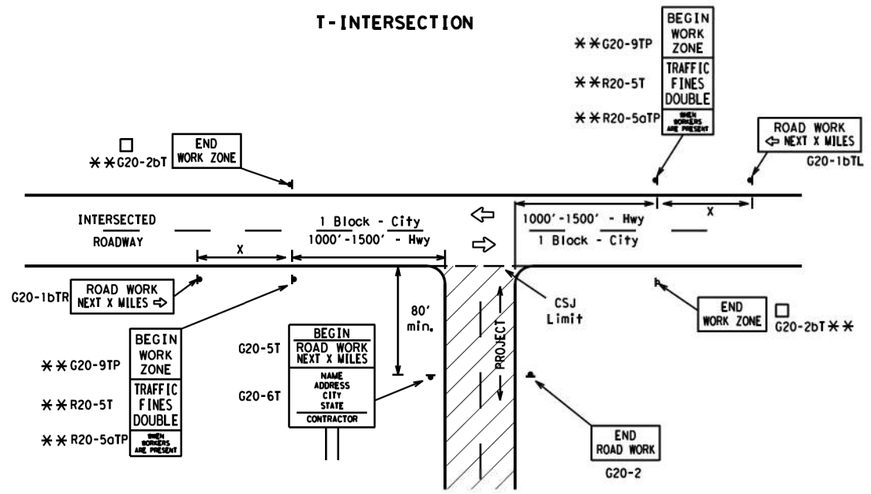

CSJ LIMITS AT T-INTERSECTION

1. The Engineer will determine the types and location of any additional traffic control devices, such as a flagger and accompanying signs, or other signs, that should be used when work is being performed at or near an intersection.
2. If construction closes the road at a T-intersection, the Contractor shall place the "CONTRACTOR NAME"(G20-6T) sign behind the Type 3 Barricades for the road closure (see BC(10) also). The "ROAD WORK NEXT X MILES" left arrow(G20-1bTL) and "ROAD WORK NEXT X MILES" right arrow (G20-1bTR)" signs shall be replaced by the detour signing called for in the plans.

TYPICAL CONSTRUCTION WARNING SIGN SIZE AND SPACING[1,5,6]

SIZE

Sign Number or Series	Conventional Road	Expressway/ Freeway
CW20[4] CW21 CW22 CW23 CW25	48" x 48"	48" x 48"
CW1, CW2, CW7, CW8, CW9, CW11, CW14	36" x 36"	48" x 48"
CW3, CW4, CW5, CW6, CW8-3, CW10, CW12	48" x 48"	48" x 48"

SPACING

Posted Speed	Sign △ Spacing "X"
MPH	Feet (Apprx.)
30	120
35	160
40	240
45	320
50	400
55	500[2]
60	600[2]
65	700[2]
70	800[2]
75	900[2]
80	1000[2]
*	*[3]

* For typical sign spacings on divided highways, expressways and freeways, see Part 6 of the "Texas Manual on Uniform Traffic Control Devices" (TMUTCD) typical application diagrams or TCP Standard Sheets.

△ Minimum distance from work area to first Advance Warning sign nearest the work area and/or distance between each additional sign.

GENERAL NOTES

1. Special or larger size signs may be used as necessary.
2. Distance between signs should be increased as required to have 1500 feet advance warning.
3. Distance between signs should be increased as required to have 1/2 mile or more advance warning.
4. 36" x 36" "ROAD WORK AHEAD" (CW20-1D)signs may be used on low volume crossroads at the discretion of the Engineer as per TMUTCD Part 5. See Note 2 under "Typical Location of Crossroad Signs".
5. Only diamond shaped warning sign sizes are indicated.
6. See sign size listing in "TMUTCD", Sign Appendix or the "Standard Highway Sign Designs for Texas" manual for complete list of available sign design sizes.

WORK AREAS IN MULTIPLE LOCATIONS WITHIN CSJ LIMITS

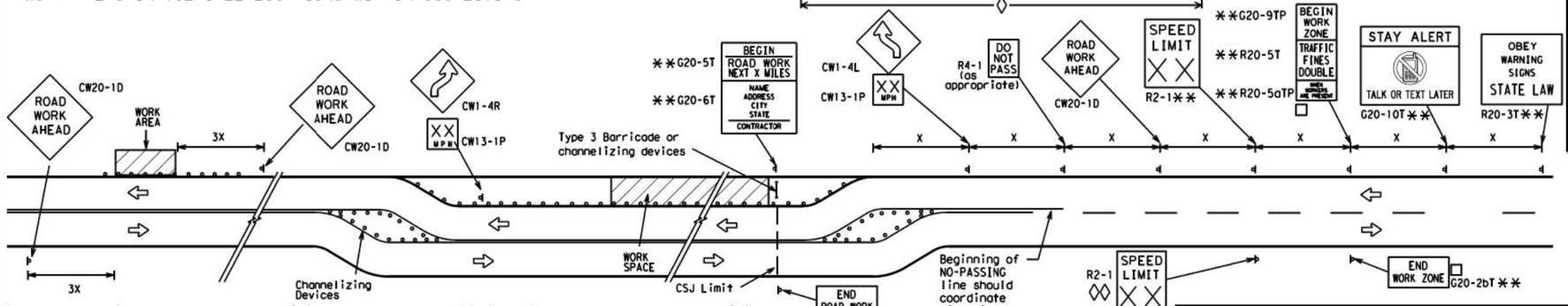

When extended distances occur between minimal work spaces, the Engineer/Inspector should ensure additional "ROAD WORK AHEAD"(CW20-1D)signs are placed in advance of these work areas to remind drivers they are still within the project limits. See the applicable TCP sheets for exact location and spacing of signs and channelizing devices.

SAMPLE LAYOUT OF SIGNING FOR WORK BEGINNING DOWNSTREAM OF THE CSJ LIMITS

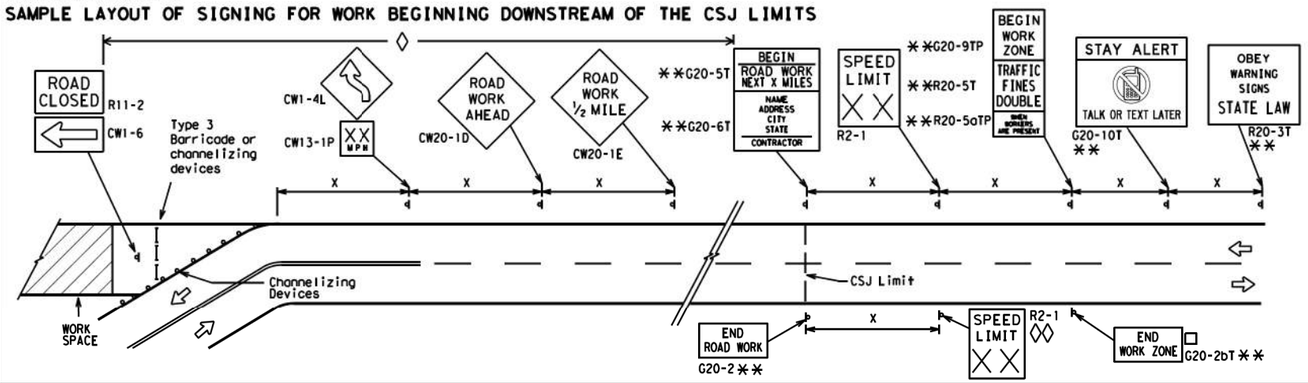

SAMPLE LAYOUT OF SIGNING FOR WORK BEGINNING AT THE CSJ LIMITS

NOTES

The Contractor shall determine the appropriate distance to be placed on the G20-1 series signs and "BEGIN ROAD WORK NEXT X MILES"(G20-5T)sign for each specific project. This distance shall replace the "X" and shall be rounded to the nearest whole mile with the approval of the Engineer. No decimals shall be used.

□ The "BEGIN WORK ZONE"(G20-9TP) and "END WORK ZONE" (G20-2bT) shall be used as shown on the sample layout when advance signs are required outside the CSJ Limits. They inform the motorist of entering or leaving a part of the work zone lying outside the CSJ Limits where traffic fines may double if workers are present.

** CSJ limit signing is required for highway construction and maintenance work, with the exception of mobile operations.

◊ Area for placement of "ROAD WORK AHEAD" (CW20-1D)sign and other signs or devices as called for on the Traffic Control Plan.

◊◊ Contractor will install a regulatory speed limit sign at the end of the work zone.

LEGEND

⟷	Type 3 Barricade
○ ○ ○	Channelizing Devices
▬	Sign
X	See Typical Construction Warning Sign Size and Spacing chart or the TMUTCD for sign spacing requirements.

Texas Department of Transportation

Traffic Safety Division Standard

BARRICADE AND CONSTRUCTION PROJECT LIMIT

BC(2)-21

FILE: bc-21.dgn	DN: TxDOT	CK: TxDOT	DW: TxDOT	CK: TxDOT
©TxDOT November 2002	CONT	SECT	JOB	HIGHWAY
REVISIONS				
9-07 8-14	DIST	COUNTY		SHEET NO.
7-13 5-21				26

DATE:
FILE:

DISCLAIMER:
The use of this standard is governed by the "Texas Engineering Practice Act". No warranty of any kind is made by TxDOT for any purpose whatsoever. TxDOT assumes no responsibility for the conversion of this standard to other formats or for incorrect results or damages resulting from its use.

TYPICAL APPLICATION OF WORK ZONE SPEED LIMIT SIGNS

Work zone speed limits shall be regulatory, established in accordance with the "Procedures for Establishing Speed Zones," and approved by the Texas Transportation Commission, or by City Ordinance when within Incorporated City Limits.

Reduced speeds should only be posted in the vicinity of work activity and not throughout the entire project.

Regulatory work zone speed signs (R2-1) shall be removed or covered during periods when they are not needed.

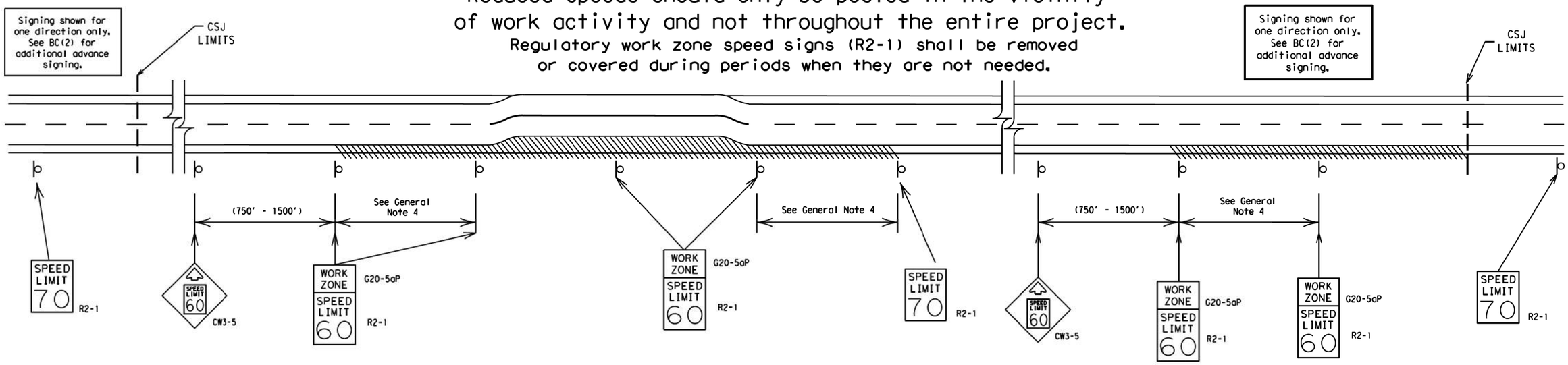

GUIDANCE FOR USE:

LONG/INTERMEDIATE TERM WORK ZONE SPEED LIMITS

This type of work zone speed limit should be included on the design of the traffic control plans when restricted geometrics with a lower design speed are present in the work zone and modification of the geometrics to a higher design speed is not feasible.

Long/Intermediate Term Work Zone Speed Limit signs, when approved as described above, should be posted and visible to the motorist when work activity is present. Work activity may also be defined as a change in the roadway that requires a reduced speed for motorists to safely negotiate the work area, including:

a) rough road or damaged pavement surface
b) substantial alteration of roadway geometrics (diversions)
c) construction detours
d) grade
e) width
f) other conditions readily apparent to the driver

As long as any of these conditions exist, the work zone speed limit signs should remain in place.

SHORT TERM WORK ZONE SPEED LIMITS

This type of work zone speed limit may be included on the design of the traffic control plans when workers or equipment are not behind concrete barrier, when work activity is within 10 feet of the traveled way or actually in the traveled way.

Short Term Work Zone Speed Limit signs should be posted and visible to the motorists only when work activity is present. When work activity is not present, signs shall be removed or covered.
(See Removing or Covering on BC(4)).

GENERAL NOTES

1. Regulatory work zone speed limits should be used only for sections of construction projects where speed control is of major importance.
2. Regulatory work zone speed limit signs shall be placed on supports at a 7 foot minimum mounting height.
3. Speed zone signs are illustrated for one direction of travel and are normally posted for each direction of travel.
4. Frequency of work zone speed limit signs should be:
   40 mph and greater 0.2 to 2 miles
   35 mph and less 0.2 to 1 mile
5. Regulatory speed limit signs shall have black legend and border on a white reflective background (See "Reflective Sheeting" on BC(4)).
6. Fabrication, erection and maintenance of the"ADVANCE SPEED LIMIT"(CW3-5)sign, "WORK ZONE"(G20-5aP) plaque and the "SPEED LIMIT"(R2-1)signs shall not be paid for directly, but shall be considered subsidiary to Item 502.
7. Turning signs from view, laying signs over or down will not be allowed, unless as otherwise noted under "REMOVING OR COVERING" on BC(4).
8. Techniques that may help reduce traffic speeds include but are not limited to:
   A. Law enforcement.
   B. Flagger stationed next to sign.
   C. Portable changeable message sign (PCMS).
   D. Low-power (drone) radar transmitter.
   E. Speed monitor trailers or signs.
9. Speeds shown on details above are for illustration only. Work Zone Speed Limits should only be posted as approved for each project.
10. For more specific guidance concerning the type of work, work zone conditions and factors impacting allowable regulatory construction speed zone reduction see TxDOT form #1204 in the TxDOT e-form system.

Texas Department of Transportation | Traffic Safety Division Standard

BARRICADE AND CONSTRUCTION WORK ZONE SPEED LIMIT

BC(3)-21

FILE: bc-21.dgn	DN: TxDOT	CK: TxDOT	DW: TxDOT	CK: TxDOT
©TxDOT November 2002	CONT	SECT	JOB	HIGHWAY
REVISIONS 9-07 8-14 7-13 5-21	DIST	COUNTY		SHEET NO. 27

DATE:
FILE:

DISCLAIMER:
The use of this standard is governed by the "Texas Engineering Practice Act". No warranty of any kind is made by TxDOT for any purpose whatsoever. TxDOT assumes no responsibility for the conversion of this standard to other formats or for incorrect results or damages resulting from its use.

TYPICAL MINIMUM CLEARANCES FOR LONG TERM AND INTERMEDIATE TERM SIGNS

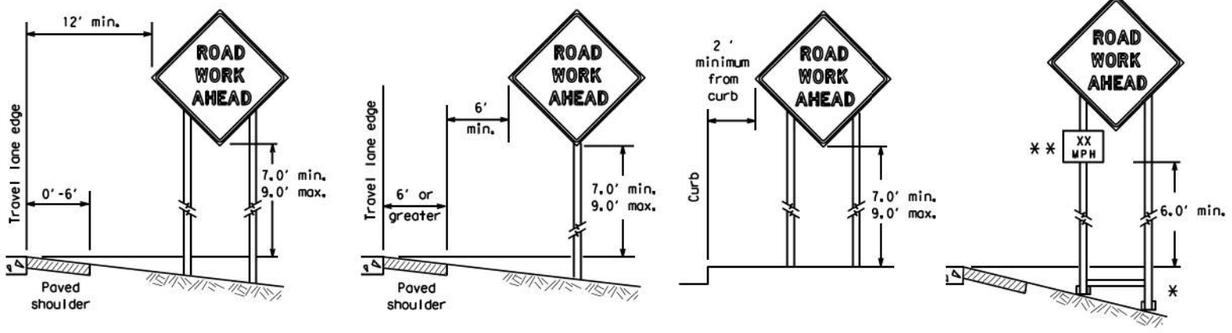

* When placing skid supports on unlevel ground, the leg post lengths must be adjusted so the sign appears straight and plumb. Objects shall NOT be placed under skids as a means of leveling.

** When plaques are placed on dual-leg supports, they should be attached to the upright nearest the travel lane. Supplemental plaques (advisory or distance) should not cover the surface of the parent sign.

ATTACHMENT FOR SIGN SUPPORTS

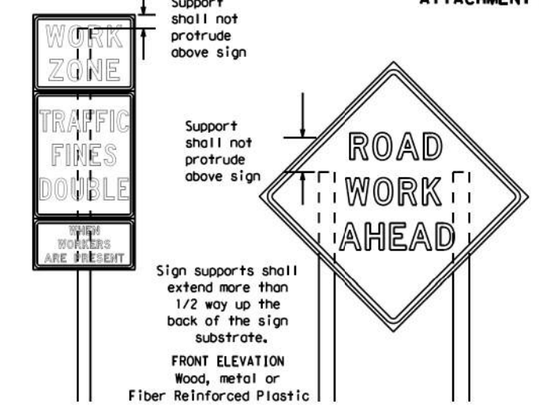

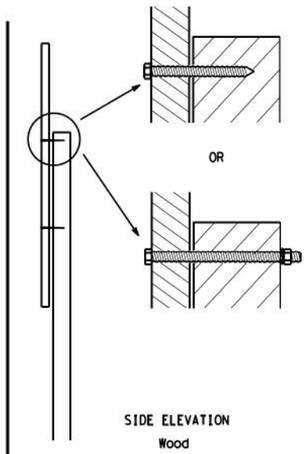

Attachment to wooden supports will be by bolts and nuts or screws. Use TxDOT's or manufacturer's recommended procedures for attaching sign substrates to other types of sign supports

Nails shall NOT be allowed. Each sign shall be attached directly to the sign support. Multiple signs shall not be joined or spliced by any means. Wood supports shall not be extended or repaired by splicing or other means.

Splicing embedded perforated square metal tubing in order to extend post height will only be allowed when the splice is made using four bolts, two above and two below the spice point. Splice must be located entirely behind the sign substrate, not near the base of the support. Splice insert lengths should be at least 5 times nominal post size, centered on the splice and of at least the same gauge material.

STOP/SLOW PADDLES

1. STOP/SLOW paddles are the primary method to control traffic by flaggers. The STOP/SLOW paddle size should be 24" x 24".
2. STOP/SLOW paddles shall be retroreflectorized when used at night.
3. STOP/SLOW paddles may be attached to a staff with a minimum length of 6' to the bottom of the sign.
4. Any lights incorporated into the STOP or SLOW paddle faces shall only be as specifically described in Section 6E.03 Hand Signaling Devices in the TMUTCD.

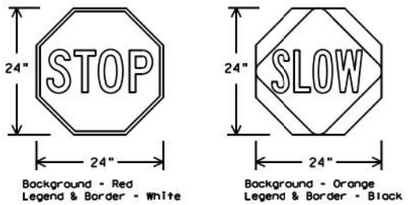

SHEETING REQUIREMENTS (WHEN USED AT NIGHT)		
USAGE	COLOR	SIGN FACE MATERIAL
BACKGROUND	RED	TYPE B OR C SHEETING
BACKGROUND	ORANGE	TYPE B_{FL} OR C_{FL} SHEETING
LEGEND & BORDER	WHITE	TYPE B OR C SHEETING
LEGEND & BORDER	BLACK	ACRYLIC NON-REFLECTIVE FILM

CONTRACTOR REQUIREMENTS FOR MAINTAINING PERMANENT SIGNS WITHIN THE PROJECT LIMITS

1. Permanent signs are used to give notice of traffic laws or regulations, call attention to conditions that are potentially hazardous to traffic operations, show route designations, destinations, directions, distances, services, points of interest, and other geographical, recreational, specific service (LOGO), or cultural information. Drivers proceeding through a work zone need the same, if not better route guidance as normally installed on a roadway without construction.
2. When permanent regulatory or warning signs conflict with work zone conditions, remove or cover the permanent signs until the permanent sign message matches the roadway condition. For details for covering large guide signs see the TS-CD standard.
3. When existing permanent signs are moved and relocated due to construction purposes, they shall be visible to motorists at all times.
4. If existing signs are to be relocated on their original supports, they shall be installed on crashworthy bases as shown on the SMD Standard sheets. The signs shall meet the required mounting heights shown on the BC Sheets or the SMD Standards. This work should be paid for under the appropriate pay item for relocating existing signs.
5. If permanent signs are to be removed and relocated using temporary supports, the Contractor shall use crashworthy supports as shown on the BC standard sheets, TLRS standard sheets or the CWZTCD list. The signs shall meet the required mounting heights shown on the BC, or the SMD standard sheets during construction. This work should be paid for under the appropriate pay item for relocating existing signs.
6. Any sign or traffic control device that is struck or damaged by the Contractor or his/her construction equipment shall be replaced as soon as possible by the Contractor to ensure proper guidance for the motorists. This will be subsidiary to Item 502.

GENERAL NOTES FOR WORK ZONE SIGNS

1. Contractor shall install and maintain signs in a straight and plumb condition and/or as directed by the Engineer.
2. Wooden sign posts shall be painted white.
3. Barricades shall NOT be used as sign supports.
4. All signs shall be installed in accordance with the plans or as directed by the Engineer. Signs shall be used to regulate, warn, and guide the traveling public safely through the work zone.
5. The Contractor may furnish either the sign design shown in the plans or in the "Standard Highway Sign Designs for Texas" (SHSD). The Engineer/Inspector may require the Contractor to furnish other work zone signs that are shown in the TMUTCD but may have been omitted from the plans. Any variation in the plans shall be documented by written agreement between the Engineer and the Contractor's Responsible Person. All changes must be documented in writing before being implemented. This can include documenting the changes in the Inspector's TxDOT diary and having both the Inspector and Contractor initial and date the agreed upon changes.
6. The Contractor shall furnish sign supports listed in the "Compliant Work Zone Traffic Control Device List" (CWZTCD) for small roadside signs. Supports for temporary large roadside signs shall meet the requirements detailed on the Temporary Large Roadside Signs (TLRS) standard sheets. The Contractor shall install the sign support in accordance with the manufacturer's recommendations. If there is a question regarding installation procedures, the Contractor shall furnish the Engineer a copy of the manufacturer's installation recommendations so the Engineer can verify the correct procedures are being followed.
7. The Contractor is responsible for installing signs on approved supports and replacing signs with damaged or cracked substrates and/or damaged or marred reflective sheeting as directed by the Engineer/Inspector.
8. Identification markings may be shown only on the back of the sign substrate. The maximum height of letters and/or company logos used for identification shall be 1 inch.
9. The Contractor shall replace damaged wood posts. New or damaged wood sign posts shall not be spliced.

DURATION OF WORK (as defined by the "Texas Manual on Uniform Traffic Control Devices" Part 6)

1. The types of sign supports, sign mounting height, the size of signs, and the type of sign substrates can vary based on the type of work being performed. The Engineer is responsible for selecting the appropriate size sign for the type of work being performed. The Contractor is responsible for ensuring the sign support, sign mounting height and substrate meets manufacturer's recommendations in regard to crashworthiness and duration of work requirements.
   a. Long-term stationary - work that occupies a location more than 3 days.
   b. Intermediate-term stationary - work that occupies a location more than one daylight period up to 3 days, or nighttime work lasting more than one hour.
   c. Short-term stationary - daytime work that occupies a location for more than 1 hour in a single daylight period.
   d. Short, duration - work that occupies a location up to 1 hour.
   e. Mobile - work that moves continuously or intermittently (stopping for up to approximately 15 minutes.)

SIGN MOUNTING HEIGHT

1. The bottom of Long-term/Intermediate-term signs shall be at least 7 feet, but not more than 9 feet, above the paved surface, except as shown for supplemental plaques mounted below other signs.
2. The bottom of Short-term/Short Duration signs shall be a minimum of 1 foot above the pavement surface but no more than 2 feet above the ground.
3. Long-term/Intermediate-term Signs may be used in lieu of Short-term/Short Duration signing.
4. Short-term/Short Duration signs shall be used only during daylight and shall be removed at the end of the workday or raised to appropriate Long-term/Intermediate sign height.
5. Regulatory signs shall be mounted at least 7 feet, but not more than 9 feet, above the paved surface regardless of work duration.

SIZE OF SIGNS

1. The Contractor shall furnish the sign sizes shown on BC (2) unless otherwise shown in the plans or as directed by the Engineer.

SIGN SUBSTRATES

1. The Contractor shall ensure the sign substrate is installed in accordance with the manufacturer's recommendations for the type of sign support that is being used. The CWZTCD lists each substrate that can be used on the different types and models of sign supports.
2. "Mesh" type materials are NOT an approved sign substrate, regardless of the tightness of the weave.
3. All wooden individual sign panels fabricated from 2 or more pieces shall have one or more plywood cleat, 1/2" thick by 6" wide, fastened to the back of the sign and extending fully across the sign. The cleat shall be attached to the back of the sign using wood screws that do not penetrate the face of the sign panel. The screws shall be placed on both sides of the splice and spaced at 6" centers. The Engineer may approve other methods of splicing the sign face.

REFLECTIVE SHEETING

1. All signs shall be retroreflective and constructed of sheeting meeting the color and retro-reflectivity requirements of DMS-8300 for rigid signs or DMS-8310 for roll-up signs. The web address for DMS specifications is shown on BC(1).
2. White sheeting, meeting the requirements of DMS-8300 Type A, shall be used for signs with a white background.
3. Orange sheeting, meeting the requirements of DMS-8300 Type B_{FL} or Type C_{FL}, shall be used for rigid signs with orange backgrounds.

SIGN LETTERS

1. All sign letters and numbers shall be clear, and open rounded type uppercase alphabet letters as approved by the Federal Highway Administration (FHWA) and as published in the "Standard Highway Sign Design for Texas" manual. Signs, letters and numbers shall be of first class workmanship in accordance with Department Standards and Specifications.

REMOVING OR COVERING

1. When sign messages may be confusing or do not apply, the signs shall be removed or completely covered.
2. Long-term stationary or intermediate stationary signs installed on square metal tubing may be turned away from traffic 90 degrees when the sign message is not applicable. This technique may not be used for signs installed in the median of divided highways or near any intersections where the sign may be seen from approaching traffic.
3. Signs installed on wooden skids shall not be turned at 90 degree angles to the roadway. These signs should be removed or completely covered when not required.
4. When signs are covered, the material used shall be opaque, such as heavy mil black plastic, or other materials which will cover the entire sign face and maintain their opaque properties under automobile headlights at night, without damaging the sign sheeting.
5. Burlap shall NOT be used to cover signs.
6. Duct tape or other adhesive material shall NOT be affixed to a sign face.
7. Signs and anchor stubs shall be removed and holes backfilled upon completion of work.

SIGN SUPPORT WEIGHTS

1. Where sign supports require the use of weights to keep from turning over, the use of sandbags with dry, cohesionless sand should be used.
2. The sandbags will be tied shut to keep the sand from spilling and to maintain a constant weight.
3. Rock, concrete, iron, steel or other solid objects shall not be permitted for use as sign support weights.
4. Sandbags should weigh a minimum of 35 lbs and a maximum of 50 lbs.
5. Sandbags shall be made of a durable material that tears upon vehicular impact. Rubber (such as tire inner tubes) shall NOT be used.
6. Rubber ballasts designed for channelizing devices should not be used for ballast on portable sign supports. Sign supports designed and manufactured with rubber bases may be used when shown on the CWZTCD list.
7. Sandbags shall only be placed along or laid over the base supports of the traffic control device and shall not be suspended above ground level or hung with rope, wire, chains or other fasteners. Sandbags shall be placed along the length of the skids to weigh down the sign support.
8. Sandbags shall NOT be placed under the skid and shall not be used to level sign supports placed on slopes.

FLAGS ON SIGNS

1. Flags may be used to draw attention to warning signs. When used, the flag shall be 16 inches square or larger and shall be orange or fluorescent red-orange in color. Flags shall not be allowed to cover any portion of the sign face.

Texas Department of Transportation | Traffic Safety Division Standard

BARRICADE AND CONSTRUCTION TEMPORARY SIGN NOTES

BC(4)-21

FILE: bc-21.dgn	DN: TxDOT	CK: TxDOT	DW: TxDOT	CK: TxDOT
©TxDOT November 2002	CONT	SECT	JOB	HIGHWAY
REVISIONS				
9-07 8-14	DIST	COUNTY		SHEET NO.
7-13 5-21				28

DATE:
FILE:

DISCLAIMER:
The use of this standard is governed by the "Texas Engineering Practice Act". No warranty of any kind is made by TxDOT for any purpose whatsoever. TxDOT assumes no responsibility for the conversion of this standard to other formats or for incorrect results or damages resulting from its use.

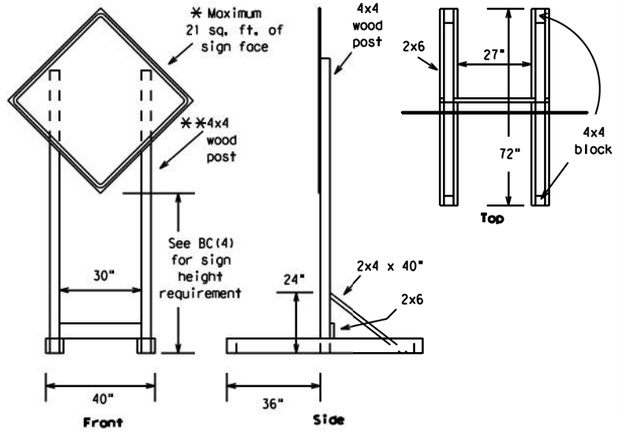

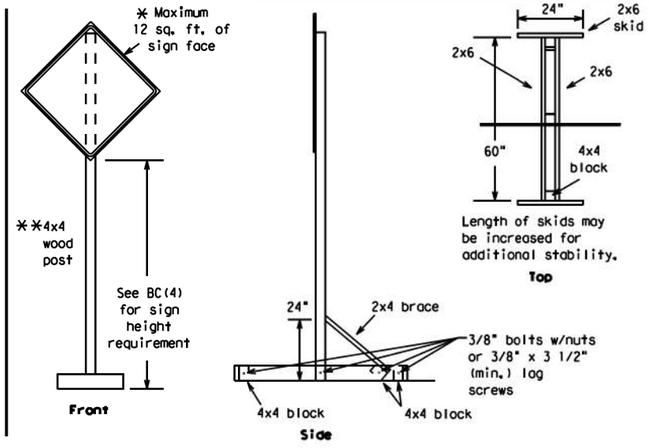

SKID MOUNTED WOOD SIGN SUPPORTS

*** LONG/INTERMEDIATE TERM STATIONARY - PORTABLE SKID MOUNTED SIGN SUPPORTS**

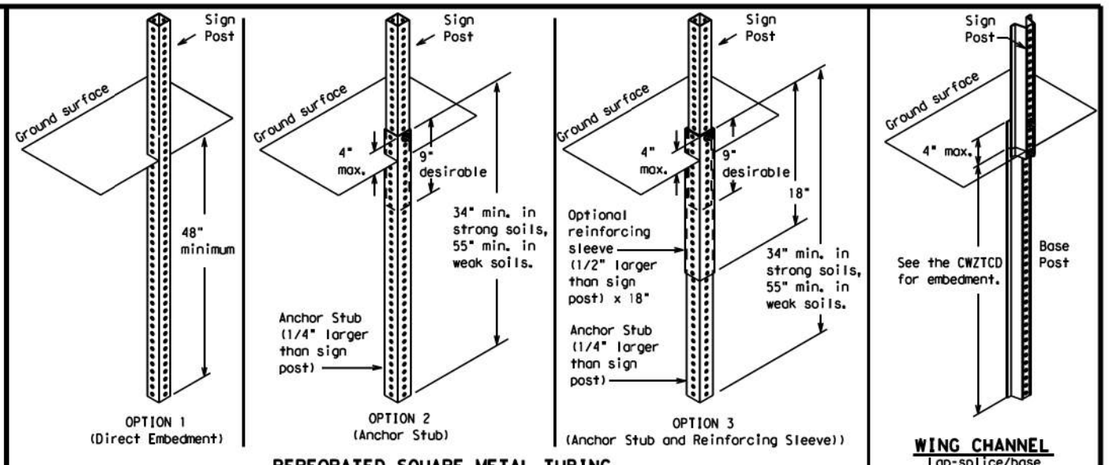

PERFORATED SQUARE METAL TUBING

GROUND MOUNTED SIGN SUPPORTS

Refer to the CWZTCD and the manufacturer's installation procedure for each type sign support.
The maximum sign square footage shall adhere to the manufacturer's recommendation.
Two post installations can be used for larger signs.

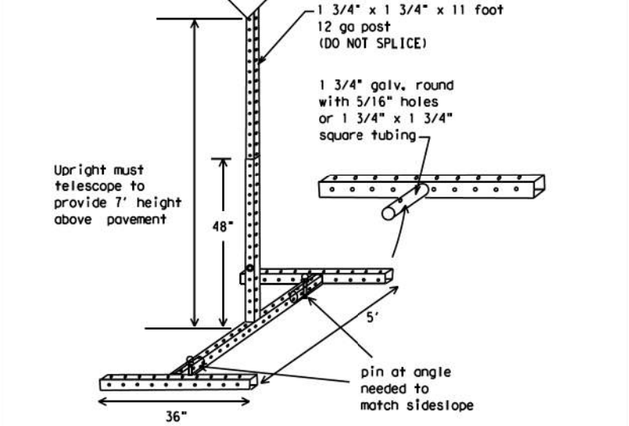

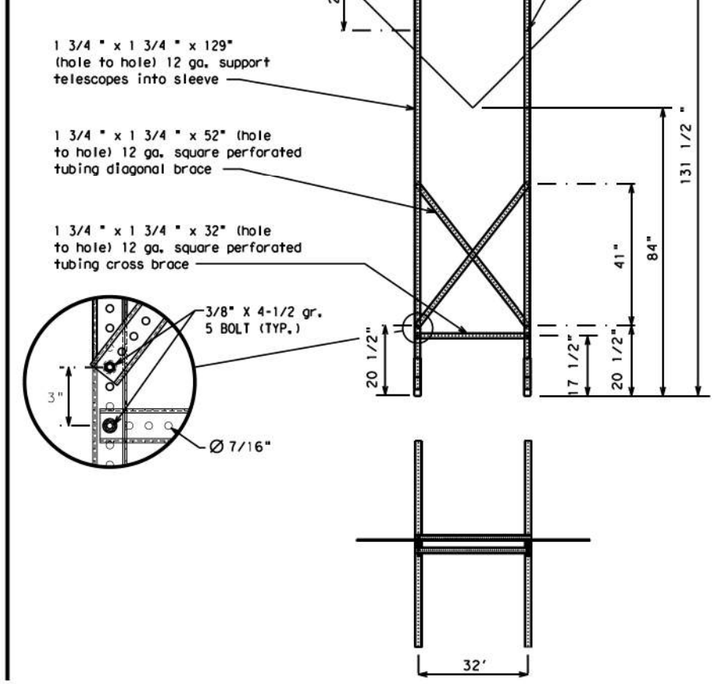

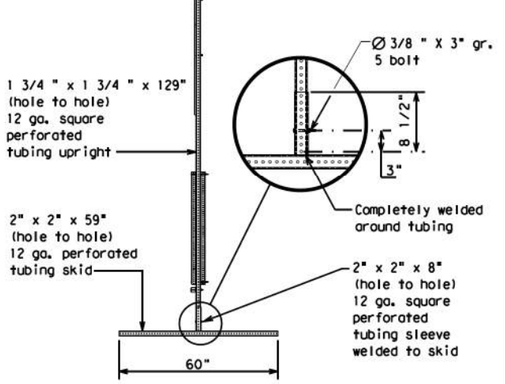

SKID MOUNTED PERFORATED SQUARE STEEL TUBING SIGN SUPPORTS

*** LONG/INTERMEDIATE TERM STATIONARY - PORTABLE SKID MOUNTED SIGN SUPPORTS**

WEDGE ANCHORS

Both steel and plastic Wedge Anchor Systems as shown on the SMD Standard Sheets may be used as temporary sign supports for signs up to 10 square feet of sign face. They may be set in concrete or in sturdy soils if approved by the Engineer. (See web address for "Traffic Engineering Standard Sheets" on BC(1)).

OTHER DESIGNS

MORE DETAILS OF APPROVED LONG/INTERMEDIATE AND SHORT TERM SUPPORTS CAN BE FOUND ON THE CWZTCD LIST. SEE BC(1) FOR WEBSITE LOCATION.

GENERAL NOTES

1. Nails may be used in the assembly of wooden sign supports, but 3/8" bolts with nuts or 3/8" x 3 1/2" lag screws must be used on every joint for final connection.
2. No more than 2 sign posts shall be placed within a 7 ft. circle, except for specific materials noted on the CWZTCD List.
3. When project is completed, all sign supports and foundations shall be removed from the project site. This will be considered subsidiary to Item 502.

* See BC(4) for definition of "Work Duration."

** Wood sign posts MUST be one piece. Splicing will NOT be allowed. Posts shall be painted white.

☐ See the CWZTCD for the type of sign substrate that can be used for each approved sign support.

Texas Department of Transportation | Traffic Safety Division Standard

BARRICADE AND CONSTRUCTION TYPICAL SIGN SUPPORT

BC(5)-21

FILE: bc-21.dgn	DN: TxDOT	CK: TxDOT	DW: TxDOT	CK: TxDOT
©TxDOT November 2002	CONT	SECT	JOB	HIGHWAY
REVISIONS				
9-07 8-14	DIST	COUNTY		SHEET NO.
7-13 5-21				29

DATE:
FILE:

DISCLAIMER:
The use of this standard is governed by the "Texas Engineering Practice Act". No warranty of any kind is made by TxDOT for any purpose whatsoever. TxDOT assumes no responsibility for the conversion of this standard to other formats or for incorrect results or damages resulting from its use.

DATE:
FILE:

WHEN NOT IN USE, REMOVE THE PCMS FROM THE RIGHT-OF-WAY OR PLACE THE PCMS BEHIND BARRIER OR GUARDRAIL WITH SIGN PANEL TURNED PARALLEL TO TRAFFIC

PORTABLE CHANGEABLE MESSAGE SIGNS

1. The Engineer/Inspector shall approve all messages used on portable changeable message signs (PCMS).
2. Messages on PCMS should contain no more than 8 words (about four to eight characters per word), not including simple words such as "TO," "FOR," "AT," etc.
3. Messages should consist of a single phase, or two phases that alternate. Three-phase messages are not allowed. Each phase of the message should convey a single thought, and must be understood by itself.
4. Use the word "EXIT" to refer to an exit ramp on a freeway; i.e., "EXIT CLOSED." Do not use the term "RAMP."
5. Always use the route or interstate designation (IH, US, SH, FM) along with the number when referring to a roadway.
6. When in use, the bottom of a stationary PCMS message panel should be a minimum 7 feet above the roadway, where possible.
7. The message term "WEEKEND" should be used only if the work is to start on Saturday morning and end by Sunday evening at midnight. Actual days and hours of work should be displayed on the PCMS if work is to begin on Friday evening and/or continue into Monday morning.
8. The Engineer/Inspector may select one of two options which are available for displaying a two-phase message on a PCMS. Each phase may be displayed for either four seconds each or for three seconds each.
9. Do not "flash" messages or words included in a message. The message should be steady burn or continuous while displayed.
10. Do not present redundant information on a two-phase message; i.e., keeping two lines of the message the same and changing the third line.
11. Do not use the word "Danger" in message.
12. Do not display the message "LANES SHIFT LEFT" or "LANES SHIFT RIGHT" on a PCMS. Drivers do not understand the message.
13. Do not display messages that scroll horizontally or vertically across the face of the sign.
14. The following table lists abbreviated words and two-word phrases that are acceptable for use on a PCMS. Both words in a phrase must be displayed together. Words or phrases not on this list should not be abbreviated, unless shown in the TMUTCD.
15. PCMS character height should be at least 18 inches for trailer mounted units. They should be visible from at least 1/2 (.5) mile and the text should be legible from at least 600 feet at night and 800 feet in daylight. Truck mounted units must have a character height of 10 inches and must be legible from at least 400 feet.
16. Each line of text should be centered on the message board rather than left or right justified.
17. If disabled, the PCMS should default to an illegible display that will not alarm motorists and will only be used to alert workers that the PCMS has malfunctioned. A pattern such as a series of horizontal solid bars is appropriate.

WORD OR PHRASE	ABBREVIATION
Access Road	ACCS RD
Alternate	ALT
Avenue	AVE
Best Route	BEST RTE
Boulevard	BLVD
Bridge	BRDG
Cannot	CANT
Center	CTR
Construction Ahead	CONST AHD
CROSSING	XING
Detour Route	DETOUR RTE
Do Not	DONT
East	E
Eastbound	(route) E
Emergency	EMER
Emergency Vehicle	EMER VEH
Entrance, Enter	ENT
Express Lane	EXP LN
Expressway	EXPWY
XXXX Feet	XXXX FT
Fog Ahead	FOG AHD
Freeway	FRWY, FWY
Freeway Blocked	FWY BLKD
Friday	FRI
Hazardous Driving	HAZ DRIVING
Hazardous Material	HAZMAT
High-Occupancy	HOV
Vehicle Highway	HWY
Hour(s)	HR, HRS
Information	INFO
It Is	ITS
Junction	JCT
Left	LFT
Left Lane	LFT LN
Lane Closed	LN CLOSED
Lower Level	LWR LEVEL
Maintenance	MAINT

WORD OR PHRASE	ABBREVIATION
Major	MAJ
Miles	MI
Miles Per Hour	MPH
Minor	MNR
Monday	MON
Normal	NORM
North	N
Northbound	(route) N
Parking	PKING
Road	RD
Right Lane	RT LN
Saturday	SAT
Service Road	SERV RD
Shoulder	SHLDR
Slippery	SLIP
South	S
Southbound	(route) S
Speed	SPD
Street	ST
Sunday	SUN
Telephone	PHONE
Temporary	TEMP
Thursday	THURS
To Downtown	TO DWNTN
Traffic	TRAF
Travelers	TRVLRS
Tuesday	TUES
Time Minutes	TIME MIN
Upper Level	UPR LEVEL
Vehicles (s)	VEH, VEHS
Warning	WARN
Wednesday	WED
Weight Limit	WT LIMIT
West	W
Westbound	(route) W
Wet Pavement	WET PVMT
Will Not	WONT

Roadway designation = IH-number, US-number, SH-number, FM-number

RECOMMENDED PHASES AND FORMATS FOR PCMS MESSAGES DURING ROADWORK ACTIVITIES

(The Engineer may approve other messages not specifically covered here.)

Phase 1: Condition Lists

Road/Lane/Ramp Closure List

- FREEWAY CLOSED X MILE
- FRONTAGE ROAD CLOSED
- ROAD CLOSED AT SH XXX
- SHOULDER CLOSED XXX FT
- ROAD CLSD AT FM XXXX
- RIGHT LN CLOSED XXX FT
- RIGHT X LANES CLOSED
- RIGHT X LANES OPEN
- CENTER LANE CLOSED
- DAYTIME LANE CLOSURES
- NIGHT LANE CLOSURES
- I-XX SOUTH EXIT CLOSED
- VARIOUS LANES CLOSED
- EXIT XXX CLOSED X MILE
- EXIT CLOSED
- RIGHT LN TO BE CLOSED
- MALL DRIVEWAY CLOSED
- X LANES CLOSED TUE - FRI
- XXXXXXXX BLVD CLOSED

Other Condition List

- ROADWORK XXX FT
- ROAD REPAIRS XXXX FT
- FLAGGER XXXX FT
- LANE NARROWS XXXX FT
- RIGHT LN NARROWS XXXX FT
- TWO-WAY TRAFFIC XX MILE
- MERGING TRAFFIC XXXX FT
- CONST TRAFFIC XXX FT
- LOOSE GRAVEL XXXX FT
- UNEVEN LANES XXXX FT
- DETOUR X MILE
- ROUGH ROAD XXXX FT
- ROADWORK PAST SH XXXX
- ROADWORK NEXT FRI-SUN
- BUMP XXXX FT
- US XXX EXIT X MILES
- TRAFFIC SIGNAL XXXX FT
- LANES SHIFT *

* LANES SHIFT in Phase 1 must be used with STAY IN LANE in Phase 2.

Phase 2: Possible Component Lists

Action to Take/Effect on Travel List

- MERGE RIGHT
- FORM X LINES RIGHT
- DETOUR NEXT X EXITS
- USE XXXXX RD EXIT
- USE EXIT XXX
- USE EXIT I-XX NORTH
- STAY ON US XXX SOUTH
- USE I-XX E TO I-XX N
- TRUCKS USE US XXX N
- WATCH FOR TRUCKS
- WATCH FOR TRUCKS
- EXPECT DELAYS
- EXPECT DELAYS
- PREPARE TO STOP
- REDUCE SPEED XXX FT
- END SHOULDER USE
- USE OTHER ROUTES
- WATCH FOR WORKERS
- STAY IN LANE *

Location List

- AT FM XXXX
- BEFORE RAILROAD CROSSING
- NEXT X MILES
- PAST US XXX EXIT
- XXXXXXX TO XXXXXXX
- US XXX TO FM XXXX

Warning List

- SPEED LIMIT XX MPH
- MAXIMUM SPEED XX MPH
- MINIMUM SPEED XX MPH
- ADVISORY SPEED XX MPH
- RIGHT LANE EXIT
- USE CAUTION
- DRIVE SAFELY
- DRIVE WITH CARE

** Advance Notice List

- TUE-FRI XX AM- X PM
- APR XX-XX X PM-X AM
- BEGINS MONDAY
- BEGINS MAY XX
- MAY X-X XX PM - XX AM
- NEXT FRI-SUN
- XX AM TO XX PM
- NEXT TUE AUG XX
- TONIGHT XX PM- XX AM

* LANES SHIFT in Phase 1 must be used with STAY IN LANE in Phase 2.

** See Application Guidelines Note 6.

APPLICATION GUIDELINES

1. Only 1 or 2 phases are to be used on a PCMS.
2. The 1st phase (or both) should be selected from the "Road/Lane/Ramp Closure List" and the "Other Condition List".
3. A 2nd phase can be selected from the "Action to Take/Effect on Travel, Location, General Warning, or Advance Notice Phase Lists".
4. A Location Phase is necessary only if a distance or location is not included in the first phase selected.
5. If two PCMS are used in sequence, they must be separated by a minimum of 1000 ft. Each PCMS shall be limited to two phases, and should be understandable by themselves.
6. For advance notice, when the current date is within seven days of the actual work date, calendar days should be replaced with days of the week. Advance notification should typically be for no more than one week prior to the work.

WORDING ALTERNATIVES

1. The words RIGHT, LEFT and ALL can be interchanged as appropriate.
2. Roadway designations IH, US, SH, FM and LP can be interchanged as appropriate.
3. EAST, WEST, NORTH and SOUTH (or abbreviations E, W, N and S) can be interchanged as appropriate.
4. Highway names and numbers replaced as appropriate.
5. ROAD, HIGHWAY and FREEWAY can be interchanged as needed.
6. AHEAD may be used instead of distances if necessary.
7. FT and MI, MILE and MILES interchanged as appropriate.
8. AT, BEFORE and PAST interchanged as needed.
9. Distances or AHEAD can be eliminated from the message if a location phase is used.

PCMS SIGNS WITHIN THE R.O.W. SHALL BE BEHIND GUARDRAIL OR CONCRETE BARRIER OR SHALL HAVE A MINIMUM OF FOUR (4) PLASTIC DRUMS PLACED PERPENDICULAR TO TRAFFIC ON THE UPSTREAM SIDE OF THE PCMS, WHEN EXPOSED TO ONE DIRECTION OF TRAFFIC. WHEN EXPOSED TO TWO WAY TRAFFIC, THE FOUR DRUMS SHOULD BE PLACED WITH ONE DRUM AT EACH OF THE FOUR CORNERS OF THE UNIT.

FULL MATRIX PCMS SIGNS

1. When Full Matrix PCMS signs are used, the character height and legibility/visibility requirements shall be maintained as listed in Note 15 under "PORTABLE CHANGEABLE MESSAGE SIGNS" above.
2. When symbol signs, such as the "Flagger Symbol"(CW20-7) are represented graphically on the Full Matrix PCMS sign and, with the approval of the Engineer, it shall maintain the legibility/visibility requirement listed above.
3. When symbol signs are represented graphically on the Full Matrix PCMS, they shall only supplement the use of the static sign represented, and shall not substitute for, or replace that sign.
4. A full matrix PCMS may be used to simulate a flashing arrow board provided it meets the visibility, flash rate and dimming requirements on BC(7), for the same size arrow.

Texas Department of Transportation

Traffic Safety Division Standard

BARRICADE AND CONSTRUCTION PORTABLE CHANGEABLE MESSAGE SIGN (PCMS)

BC(6)-21

FILE: bc-21.dgn	DN: TxDOT	CK: TxDOT	DW: TxDOT	CK: TxDOT
©TxDOT November 2002	CONT	SECT	JOB	HIGHWAY
REVISIONS				
9-07 8-14	DIST	COUNTY		SHEET NO.
7-13 5-21				30

100

DISCLAIMER:
The use of this standard is governed by the "Texas Engineering Practice Act". No warranty of any kind is made by TxDOT for any purpose whatsoever. TxDOT assumes no responsibility for the conversion of this standard to other formats or for incorrect results or damages resulting from its use.

1. Barrier Reflectors shall be pre-qualified, and conform to the color and reflectivity requirements of DMS-8600. A list of prequalified Barrier Reflectors can be found at the Material Producer List web address shown on BC(1).
2. Color of Barrier Reflectors shall be as specified in the TMUTCD. The cost of the reflectors shall be considered subsidiary to Item 512.

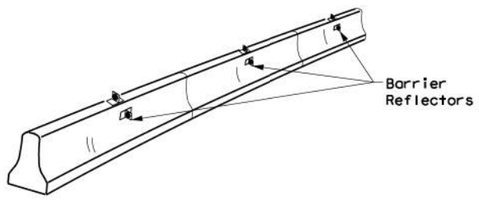

CONCRETE TRAFFIC BARRIER (CTB)

3. Where traffic is on one side of the CTB, two (2) Barrier Reflectors shall be mounted in approximately the midsection of each section of CTB. An alternate mounting location is uniformly spaced at one end of each CTB. This will allow for attachment of a barrier grapple without damaging the reflector. The Barrier Reflector mounted on the side of the CTB shall be located directly below the reflector mounted on top of the barrier, as shown in the detail above.
4. Where CTB separates two-way traffic, three barrier reflectors shall be mounted on each section of CTB. The reflector unit on top shall have two yellow reflective faces (Bi-Directional)while the reflectors on each side of the barrier shall have one yellow reflective face, as shown in the detail above.
5. When CTB separates traffic traveling in the same direction, no barrier reflectors will be required on top of the CTB.
6. Barrier Reflector units shall be yellow or white in color to match the edgeline being supplemented.
7. Maximum spacing of Barrier Reflectors is forty (40) feet.
8. Pavement markers or temporary flexible-reflective roadway marker tabs shall NOT be used as CTB delineation.
9. Attachment of Barrier Reflectors to CTB shall be per manufacturer's recommendations.
10. Missing or damaged Barrier Reflectors shall be replaced as directed by the Engineer.
11. Single slope barriers shall be delineated as shown on the above detail.

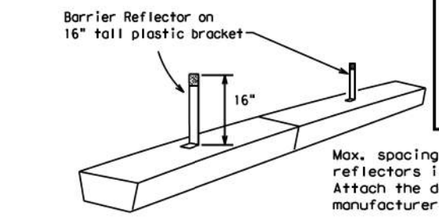

Max. spacing of barrier reflectors is 20 feet. Attach the delineators as per manufacturer's recommendations.

LOW PROFILE CONCRETE BARRIER (LPCB) USED IN WORK ZONES

LPCB is approved for use in work zone locations, where the posted speed is 45mph, or less. See Roadway Standard Sheet LPCB.

LOW PROFILE CONCRETE BARRIER (LPCB)

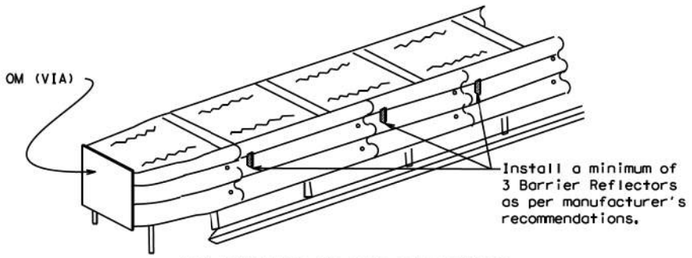

DELINEATION OF END TREATMENTS

END TREATMENTS FOR CTB'S USED IN WORK ZONES

End treatments used on CTB's in work zones shall meet the apppropriate crashworthy standards as defined in the Manual for Assessing Safety Hardware (MASH). Refer to the CWZTCD List for approved end treatments and manufacturers.

BARRIER REFLECTORS FOR CONCRETE TRAFFIC BARRIER AND ATTENUATORS

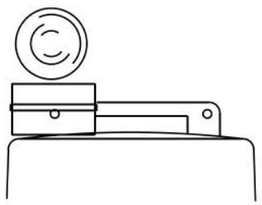

Type C Warning Light or approved substitute mounted on a drum adjacent to the travel way.

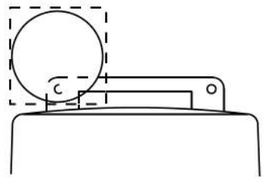

Warning reflector may be round or square. Must have a yellow reflective surface area of at least 30 square inches

WARNING LIGHTS

1. Warning lights shall meet the requirements of the TMUTCD.
2. Warning lights shall NOT be installed on barricades.
3. Type A-Low Intensity Flashing Warning Lights are commonly used with drums. They are intended to warn of or mark a potentially hazardous area. Their use shall be as indicated on this sheet and/or other sheets of the plans by the designation "FL". The Type A Warning Lights shall not be used with signs manufactured with Type B_{FL} or C_{FL} Sheeting meeting the requirements of Departmental Material Specification DMS-8300.
4. Type-C and Type D 360 degree Steady Burn Lights are intended to be used in a series for delineation to supplement other traffic control devices. Their use shall be as indicated on this sheet and/or other sheets of the plans by the designation "SB".
5. The Engineer/Inspector or the plans shall specify the location and type of warning lights to be installed on the traffic control devices.
6. When required by the Engineer, the Contractor shall furnish a copy of the warning lights certification. The warning light manufacturer will certify the warning lights meet the requirements of the latest ITE Purchase Specifications for Flashing and Steady-Burn Warning Lights.
7. When used to delineate curves, Type-C and Type D Steady Burn Lights should only be placed on the outside of the curve, not the inside.
8. The location of warning lights and warning reflectors on drums shall be as shown elsewhere in the plans.

WARNING LIGHTS MOUNTED ON PLASTIC DRUMS

1. Type A flashing warning lights are intended to warn drivers that they are approaching or are in a potentially hazardous area.
2. Type A random flashing warning lights are not intended for delineation and shall not be used in a series.
3. A series of sequential flashing warning lights placed on channelizing devices to form a merging taper may be used for delineation. If used, the successive flashing of the sequential warning lights should occur from the beginning of the taper to the end of the merging taper in order to identify the desired vehicle path. The rate of flashing for each light shall be 65 flashes per minute, plus or minus 10 flashes.
4. Type C and D steady-burn warning lights are intended to be used in a series to delineate the edge of the travel lane on detours, on lane changes, on lane closures, and on other similar conditions.
5. Type A, Type C and Type D warning lights shall be installed at locations as detailed on other sheets in the plans.
6. Warning lights shall not be installed on a drum that has a sign, chevron or vertical panel.
7. The maximum spacing for warning lights on drums should be identical to the channelizing device spacing.

WARNING REFLECTORS MOUNTED ON PLASTIC DRUMS AS A SUBSTITUTE FOR TYPE C (STEADY BURN) WARNING LIGHTS

1. A warning reflector or approved substitute may be mounted on a plastic drum as a substitute for a Type C, steady burn warning light at the discretion of the Contractor unless otherwise noted in the plans.
2. The warning reflector shall be yellow in color and shall be manufactured using a sign substrate approved for use with plastic drums listed on the CWZTCD.
3. The warning reflector shall have a minimum retroreflective surface area (one-side) of 30 square inches.
4. Round reflectors shall be fully reflectorized, including the area where attached to the drum.
5. Square substrates must have a minimum of 30 square inches of reflectorized sheeting. They do not have to be reflectorized where it attaches to the drum.
6. The side of the warning reflector facing approaching traffic shall have sheeting meeting the color and retroreflectivity requirements for DMS 8300-Type B or Type C.
7. When used near two-way traffic, both sides of the warning reflector shall be reflectorized.
8. The warning reflector should be mounted on the side of the handle nearest approaching traffic.
9. The maximum spacing for warning reflectors should be identical to the channelizing device spacing requirements.

Arrow Boards may be located behind channelizing devices in place for a shoulder taper or merging taper, otherwise they shall be delineated with four (4) channelizing devices placed perpendicular to traffic on the upstream side of traffic.

1. The Flashing Arrow Board should be used for all lane closures on multi-lane roadways, or slow moving maintenance or construction activities on the travel lanes.
2. Flashing Arrow Boards should not be used on two-lane, two-way roadways, detours, diversions or work on shoulders unless the "CAUTION" display (see detail below) is used.
3. The Engineer/Inspector shall choose all appropriate signs, barricades and/or other traffic control devices that should be used in conjunction with the Flashing Arrow Board.
4. The Flashing Arrow Board should be able to display the following symbols:

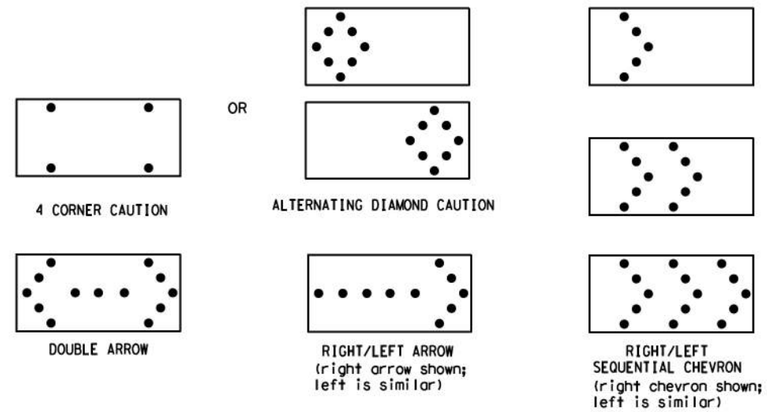

5. The "CAUTION" display consists of four corner lamps flashing simultaneously, or the Alternating Diamond Caution mode as shown.
6. The straight line caution display is NOT ALLOWED.
7. The Flashing Arrow Board shall be capable of minimum 50 percent dimming from rated lamp voltage. The flashing rate of the lamps shall not be less than 25 nor more than 40 flashes per minute.
8. Minimum lamp "on time" shall be approximately 50 percent for the flashing arrow and equal intervals of 25 percent for each sequential phase of the flashing chevron.
9. The sequential arrow display is NOT ALLOWED.
10. The flashing arrow display is the TxDOT standard; however, the sequential chevron display may be used during daylight operations.
11. The Flashing Arrow Board shall be mounted on a vehicle, trailer or other suitable support.
12. A Flashing Arrow Board SHALL NOT BE USED to laterally shift traffic.
13. A full matrix PCMS may be used to simulate a Flashing Arrow Board provided it meets visibility, flash rate and dimming requirements on this sheet for the same size arrow.
14. Minimum mounting height of trailer mounted Arrow Boards should be 7 feet from roadway to bottom of panel.

REQUIREMENTS			
TYPE	MINIMUM SIZE	MINIMUM NUMBER OF PANEL LAMPS	MINIMUM VISIBILITY DISTANCE
B	30 x 60	13	3/4 mile
C	48 x 96	15	1 mile

ATTENTION

Flashing Arrow Boards shall be equipped with automatic dimming devices.

WHEN NOT IN USE, REMOVE THE ARROW BOARD FROM THE RIGHT-OF-WAY OR PLACE THE ARROW BOARD BEHIND CONCRETE TRAFFIC BARRIER OR GUARDRAIL.

FLASHING ARROW BOARDS

TRUCK-MOUNTED ATTENUATORS

1. Truck-mounted attenuators (TMA) used on TxDOT facilities must meet the requirements outlined in the Manual for Assessing Safety Hardware (MASH).
2. Refer to the CWZTCD for the requirements of Level 2 or Level 3 TMAs.
3. Refer to the CWZTCD for a list of approved TMAs.
4. TMAs are required on freeways unless otherwise noted in the plans.
5. A TMA should be used anytime that it can be positioned 30 to 100 feet in advance of the area of crew exposure without adversely affecting the work performance.
6. The only reason a TMA should not be required is when a work area is spread down the roadway and the work crew is an extended distance from the TMA.

Texas Department of Transportation

Traffic Safety Division Standard

BARRICADE AND CONSTRUCTION ARROW PANEL, REFLECTORS, WARNING LIGHTS & ATTENUATOR

BC(7)-21

FILE: bc-21.dgn	DN: TxDOT	CK: TxDOT	DW: TxDOT	CK: TxDOT
©TxDOT November 2002	CONT	SECT	JOB	HIGHWAY
REVISIONS				
9-07 8-14	DIST	COUNTY		SHEET NO.
7-13 5-21				31

DATE:
FILE:

101

DISCLAIMER:
The use of this standard is governed by the "Texas Engineering Practice Act". No warranty of any kind is made by TxDOT for any purpose whatsoever. TxDOT assumes no responsibility for the conversion of this standard to other formats or for incorrect results or damages resulting from its use.

DATE:
FILE:

GENERAL NOTES

1. For long term stationary work zones on freeways, drums shall be used as the primary channelizing device.
2. For intermediate term stationary work zones on freeways, drums should be used as the primary channelizing device but may be replaced in tangent sections by vertical panels, or 42" two-piece cones. In tangent sections, one-piece cones may be used with the approval of the Engineer but only if personnel are present on the project at all times to maintain the cones in proper position and location.
3. For short term stationary work zones on freeways, drums are the preferred channelizing device but may be replaced in tapers, transitions and tangent sections by vertical panels, two-piece cones or one-piece cones as approved by the Engineer.
4. Drums and all related items shall comply with the requirements of the current version of the "Texas Manual on Uniform Traffic Control Devices" (TMUTCD) and the "Compliant Work Zone Traffic Control Devices List" (CWZTCD).
5. Drums, bases, and related materials shall exhibit good workmanship and shall be free from objectionable marks or defects that would adversely affect their appearance or serviceability.
6. The Contractor shall have a maximum of 24 hours to replace any plastic drums identified for replacement by the Engineer/Inspector. The replacement device must be an approved device.

GENERAL DESIGN REQUIREMENTS

Pre-qualified plastic drums shall meet the following requirements:

1. Plastic drums shall be a two-piece design; the "body" of the drum shall be the top portion and the "base" shall be the bottom.
2. The body and base shall lock together in such a manner that the body separates from the base when impacted by a vehicle traveling at a speed of 20 MPH or greater but prevents accidental separation due to normal handling and/or air turbulence created by passing vehicles.
3. Plastic drums shall be constructed of lightweight flexible, and deformable materials. The Contractor shall NOT use metal drums or single piece plastic drums as channelization devices or sign supports.
4. Drums shall present a profile that is a minimum of 18 inches in width at the 36 inch height when viewed from any direction. The height of drum unit (body installed on base) shall be a minimum of 36 inches and a maximum of 42 inches.
5. The top of the drum shall have a built-in handle for easy pickup and shall be designed to drain water and not collect debris. The handle shall have a minimum of two widely spaced 9/16 inch diameter holes to allow attachment of a warning light, warning reflector unit or approved compliant sign.
6. The exterior of the drum body shall have a minimum of four alternating orange and white retroreflective circumferential stripes not less than 4 inches nor greater than 8 inches in width. Any non-reflectorized space between any two adjacent stripes shall not exceed 2 inches in width.
7. Bases shall have a maximum width of 36 inches, a maximum height of 4 inches, and a minimum of two footholds of sufficient size to allow base to be held down while separating the drum body from the base.
8. Plastic drums shall be constructed of ultra-violet stabilized, orange, high-density polyethylene (HDPE) or other approved material.
9. Drum body shall have a maximum unballasted weight of 11 lbs.
10. Drum and base shall be marked with manufacturer's name and model number.

RETROREFLECTIVE SHEETING

1. The stripes used on drums shall be constructed of sheeting meeting the color and retroreflectivity requirements of Departmental Materials Specification DMS-8300, "Sign Face Materials." Type A or Type B reflective sheeting shall be supplied unless otherwise specified in the plans.
2. The sheeting shall be suitable for use on and shall adhere to the drum surface such that, upon vehicular impact, the sheeting shall remain adhered in-place and exhibit no delaminating, cracking, or loss of retroreflectivity other than that loss due to abrasion of the sheeting surface.

BALLAST

1. Unballasted bases shall be large enough to hold up to 50 lbs. of sand. This base, when filled with the ballast material, should weigh between 35 lbs (minimum) and 50 lbs (maximum). The ballast may be sand in one to three sandbags separate from the base, sand in a sand-filled plastic base, or other ballasting devices as approved by the Engineer. Stacking of sandbags will be allowed, however height of sandbags above pavement surface may not exceed 12 inches.
2. Bases with built-in ballast shall weigh between 40 lbs. and 50 lbs. Built-in ballast can be constructed of an integral crumb rubber base or a solid rubber base.
3. Recycled truck tire sidewalls may be used for ballast on drums approved for this type of ballast on the CWZTCD list.
4. The ballast shall not be heavy objects, water, or any material that would become hazardous to motorists, pedestrians, or workers when the drum is struck by a vehicle.
5. When used in regions susceptible to freezing, drums shall have drainage holes in the bottoms so that water will not collect and freeze becoming a hazard when struck by a vehicle.
6. Ballast shall not be placed on top of drums.
7. Adhesives may be used to secure base of drums to pavement.

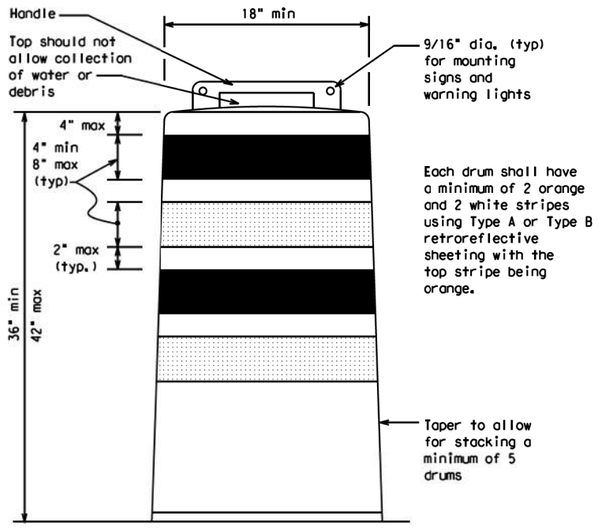

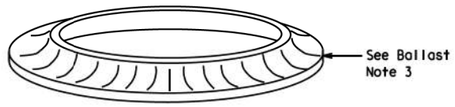

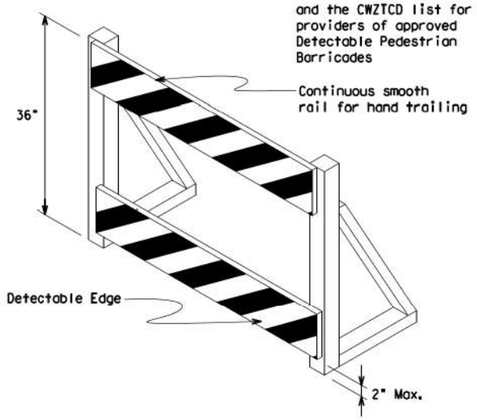

DETECTABLE PEDESTRIAN BARRICADES

1. When existing pedestrian facilities are disrupted, closed, or relocated in a TTC zone, the temporary facilities shall be detectable and include accessibility features consistent with the features present in the existing pedestrian facility. Refer to WZ(BTS-2) for Pedestrian Control requirements for Sidewalk Diversions, Sidewalk Detours and Crosswalk Closures.
2. Where pedestrians with visual disabilities normally use the closed sidewalk, a Detectable Pedestrian Barricade shall be placed across the full width of the closed sidewalk instead of a Type 3 Barricade.
3. Detectable pedestrian barricades similar to the one pictured above, longitudinal channelizing devices, some concrete barriers, and wood or chain link fencing with a continuous detectable edging can satisfactorily delineate a pedestrian path.
4. Tape, rope, or plastic chain strung between devices are not detectable, do not comply with the design standards in the "Americans with Disabilities Act Accessibility Guidelines (ADAAG)" and should not be used as a control for pedestrian movements.
5. Warning lights shall not be attached to detectable pedestrian barricades.
6. Detectable pedestrian barricades should use 8" nominal barricade rails as shown on BC(10) provided that the top rail provides a smooth continuous rail suitable for hand trailing with no splinters, burrs, or sharp edges.

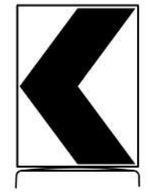

18" x 24" Sign
(Maximum Sign Dimension)
Chevron CW1-8, Opposing Traffic Lane Divider, Driveway sign D70a, Keep Right R4 series or other signs as approved by Engineer

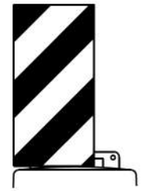

12" x 24"
Vertical Panel
mount with diagonals sloping down towards travel way

Plywood, Aluminum or Metal sign substrates shall NOT be used on plastic drums

SIGNS, CHEVRONS, AND VERTICAL PANELS MOUNTED ON PLASTIC DRUMS

1. Signs used on plastic drums shall be manufactured using substrates listed on the CWZTCD.
2. Chevrons and other work zone signs with an orange background shall be manufactured with Type B_{FL} or Type C_{FL} Orange sheeting meeting the color and retroreflectivity requirements of DMS-8300, "Sign Face Material," unless otherwise specified in the plans.
3. Vertical Panels shall be manufactured with orange and white sheeting meeting the requirements of DMS-8300 Type A or Type B. Diagonal stripes on Vertical Panels shall slope down toward the intended traveled lane.
4. Other sign messages (text or symbolic) may be used as approved by the Engineer. Sign dimensions shall not exceed 18 inches in width or 24 inches in height, except for the R9 series signs discussed in note 8 below.
5. Signs shall be installed using a 1/2 inch bolt (nominal) and nut, two washers, and one locking washer for each connection.
6. Mounting bolts and nuts shall be fully engaged and adequately torqued. Bolts should not extend more than 1/2 inch beyond nuts.
7. Chevrons may be placed on drums on the outside of curves, on merging tapers or on shifting tapers. When used in these locations, they may be placed on every drum or spaced not more than on every third drum. A minimum of three (3) should be used at each location called for in the plans.
8. R9-9, R9-10, R9-11 and R9-11a Sidewalk Closed signs which are 24 inches wide may be mounted on plastic drums, with approval of the Engineer.

Texas Department of Transportation

Traffic Safety Division Standard

BARRICADE AND CONSTRUCTION CHANNELIZING DEVICES

BC(8)-21

FILE: bc-21.dgn	DN: TxDOT	CK: TxDOT	DW: TxDOT	CK: TxDOT
©TxDOT November 2002	CONT	SECT	JOB	HIGHWAY
REVISIONS				
4-03 8-14	DIST	COUNTY		SHEET NO.
9-07 5-21				32
7-13				

DISCLAIMER:
The use of this standard is governed by the "Texas Engineering Practice Act". No warranty of any kind is made by TxDOT for any purpose whatsoever. TxDOT assumes no responsibility for the conversion of this standard to other formats or for incorrect results or damages resulting from its use.

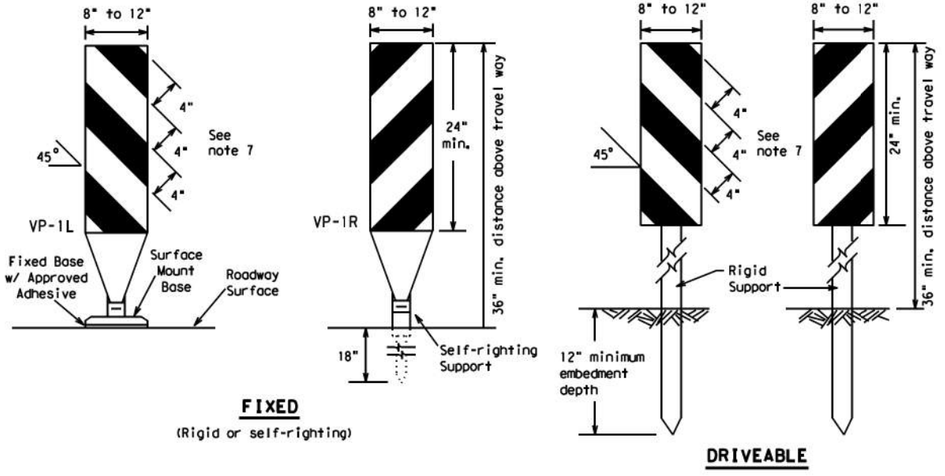

FIXED
(Rigid or self-righting)

DRIVEABLE

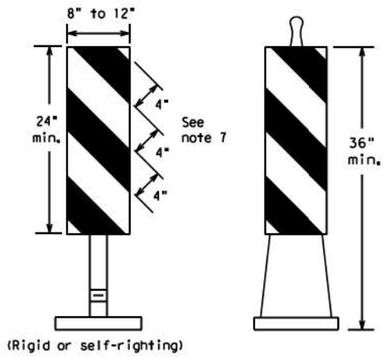

(Rigid or self-righting)

PORTABLE

1. Vertical Panels (VP's) are normally used to channelize traffic or divide opposing lanes of traffic.
2. VP's may be used in daytime or nighttime situations. They may be used at the edge of shoulder drop-offs and other areas such as lane transitions where positive daytime and nighttime delineation is required. The Engineer/Inspector shall refer to the Roadway Design Manual for additional requirements on the use VP's for drop-offs.
3. VP's should be mounted back to back if used at the edge of cuts adjacent to two-way two lane roadways. Stripes are to be reflective orange and reflective white and should always slope downward toward the travel lane.
4. VP's used on expressways and freeways or other high speed roadways, may have more than 270 square inches of retroreflective area facing traffic.
5. Self-righting supports are available with portable base. See "Compliant Work Zone Traffic Control Devices List" (CWZTCD).
6. Sheeting for the VP's shall be retroreflective Type A or Type B conforming to Departmental Material Specification DMS-8300, unless noted otherwise.
7. Where the height of reflective material on the vertical panel is 36 inches or greater, a panel stripe of 6 inches shall be used.

VERTICAL PANELS (VPs)

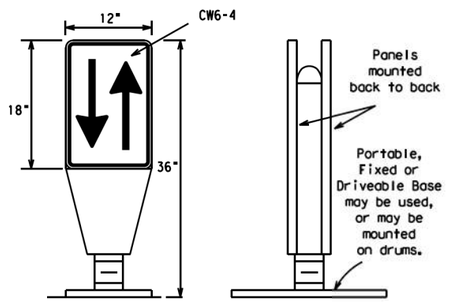

1. Opposing Traffic Lane Dividers (OTLD) are delineation devices designed to convert a normal one-way roadway section to two-way operation. OTLD's are used on temporary centerlines. The upward and downward arrows on the sign's face indicate the direction of traffic on either side of the divider. The base is secured to the pavement with an adhesive or rubber weight to minimize movement caused by a vehicle impact or wind gust.
2. The OTLD may be used in combination with 42" cones or VPs.
3. Spacing between the OTLD shall not exceed 500 feet. 42" cones or VPs placed between the OTLD's should not exceed 100 foot spacing.
4. The OTLD shall be orange with a black non-reflective legend. Sheeting for the OTLD shall be retroreflective Type B_{FL} or Type C_{FL} conforming to Departmental Material Specification DMS-8300, unless noted otherwise. The legend shall meet the requirements of DMS-8300.

OPPOSING TRAFFIC LANE DIVIDERS (OTLD)

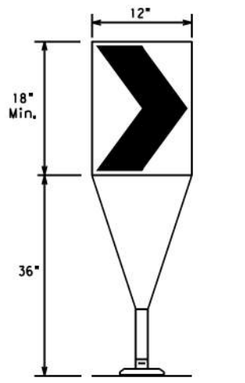

Fixed Base w/ Approved Adhesive (Driveable Base, or Flexible Support can be used)

1. The chevron shall be a vertical rectangle with a minimum size of 12 by 18 inches.
2. Chevrons are intended to give notice of a sharp change of alignment with the direction of travel and provide additional emphasis and guidance for vehicle operators with regard to changes in horizontal alignment of the roadway.
3. Chevrons, when used, shall be erected on the outside of a sharp curve or turn, or on the far side of an intersection. They shall be in line with and at right angles to approaching traffic. Spacing should be such that the motorist always has three in view, until the change in alignment eliminates its need.
4. To be effective, the chevron should be visible for at least 500 feet.
5. Chevrons shall be orange with a black nonreflective legend. Sheeting for the chevron shall be retroreflective Type B_{FL} or Type C_{FL} conforming to Departmental Material Specification DMS-8300, unless noted otherwise. The legend shall meet the requirements of DMS-8300.
6. For Long Term Stationary use on tapers or transitions on freeways and divided highways, self-righting chevrons may be used to supplement plastic drums but not to replace plastic drums.

CHEVRONS

GENERAL NOTES

1. Work Zone channelizing devices illustrated on this sheet may be installed in close proximity to traffic and are suitable for use on high or low speed roadways. The Engineer/Inspector shall ensure that spacing and placement is uniform and in accordance with the "Texas Manual on Uniform Traffic Control Devices" (TMUTCD).
2. Channelizing devices shown on this sheet may have a driveable, fixed or portable base. The requirement for self-righting channelizing devices must be specified in the General Notes or other plan sheets.
3. Channelizing devices on self-righting supports should be used in work zone areas where channelizing devices are frequently impacted by errant vehicles or vehicle related wind gusts making alignment of the channelizing devices difficult to maintain. Locations of these devices shall be detailed elsewhere in the plans. These devices shall conform to the TMUTCD and the "Compliant Work Zone Traffic Control Devices List" (CWZTCD).
4. The Contractor shall maintain devices in a clean condition and replace damaged, nonreflective, faded, or broken devices and bases as required by the Engineer/Inspector. The Contractor shall be required to maintain proper device spacing and alignment.
5. Portable bases shall be fabricated from virgin and/or recycled rubber. The portable bases shall weigh a minimum of 30 lbs.
6. Pavement surfaces shall be prepared in a manner that ensures proper bonding between the adhesives, the fixed mount bases and the pavement surface. Adhesives shall be prepared and applied according to the manufacturer's recommendations.
7. The installation and removal of channelizing devices shall not cause detrimental effects to the final pavement surfaces, including pavement surface discoloration or surface integrity. Driveable bases shall not be permitted on final pavement surfaces. The Engineer/Inspector shall approve all application and removal procedures of fixed bases.

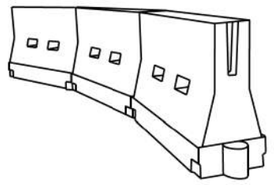

LONGITUDINAL CHANNELIZING DEVICES (LCD)

1. LCDs are crashworthy, lightweight, deformable devices that are highly visible, have good target value and can be connected together. They are not designed to contain or redirect a vehicle on impact.
2. LCDs may be used instead of a line of cones or drums.
3. LCDs shall be placed in accordance to application and installation requirements specific to the device, and used only when shown on the CWZTCD list.
4. LCDs should not be used to provide positive protection for obstacles, pedestrians or workers.
5. LCDs shall be supplemented with retroreflective delineation as required for temporary barriers on BC(7) when placed roughly parallel to the travel lanes.
6. LCDs used as barricades placed perpendicular to traffic should have at least one row of reflective sheeting meeting the requirements for barricade rails as shown on BC(10). Place reflective sheeting near the top of the LCD along the full length of the device.

WATER BALLASTED SYSTEMS USED AS BARRIERS

1. Water ballasted systems used as barriers shall not be used solely to channelize road users, but also to protect the work space per the appropriate Manual for Assessing Safety Hardware (MASH) crashworthiness requirements based on roadway speed and barrier application.
2. Water ballasted systems used to channelize vehicular traffic shall be supplemented with retroreflective delineation or channelizing devices to improve daytime/nighttime visibility. They may also be supplemented with pavement markings.
3. Water ballasted systems used as barriers shall be placed in accordance to application and installation requirements specific to the device, and used only when shown on the CWZTCD list.
4. Water ballasted systems used as barriers should not be used for a merging taper except in low speed (less than 45 MPH) urban areas. When used on a taper in a low speed urban area, the taper shall be delineated and the taper length should be designed to optimize road user operations considering the available geometric conditions.
5. When water ballasted systems used as barriers have blunt ends exposed to traffic, they should be attenuated as per manufacturer recommendations or flared to a point outside the clear zone.

If used to channelize pedestrians, longitudinal channelizing devices or water ballasted systems must have a continuous detectable bottom for users of long canes and the top of the unit shall not be less than 32 inches in height.

HOLLOW OR WATER BALLASTED SYSTEMS USED AS LONGITUDINAL CHANNELIZING DEVICES OR BARRIERS

Posted Speed	Formula	Minimum Desirable Taper Lengths ** 10' Offset	11' Offset	12' Offset	Suggested Maximum Spacing of Channelizing Devices On a Taper	On a Tangent
30	$L=\frac{WS^2}{60}$	150'	165'	180'	30'	60'
35		205'	225'	245'	35'	70'
40		265'	295'	320'	40'	80'
45	L=WS	450'	495'	540'	45'	90'
50		500'	550'	600'	50'	100'
55		550'	605'	660'	55'	110'
60		600'	660'	720'	60'	120'
65		650'	715'	780'	65'	130'
70		700'	770'	840'	70'	140'
75		750'	825'	900'	75'	150'
80		800'	880'	960'	80'	160'

** Taper lengths have been rounded off.
L=Length of Taper (FT.) W=Width of Offset (FT.)
S=Posted Speed (MPH)

SUGGESTED MAXIMUM SPACING OF CHANNELIZING DEVICES AND MINIMUM DESIRABLE TAPER LENGTHS

SHEET 9 OF 12

Texas Department of Transportation | Traffic Safety Division Standard

BARRICADE AND CONSTRUCTION CHANNELIZING DEVICES

BC(9)-21

FILE: bc-21.dgn	DN: TxDOT	CK: TxDOT	DW: TxDOT	CK: TxDOT
©TxDOT November 2002	CONT	SECT	JOB	HIGHWAY
REVISIONS				
9-07 8-14	DIST	COUNTY		SHEET NO.
7-13 5-21				33

DATE:
FILE:

103

DISCLAIMER:
The use of this standard is governed by the "Texas Engineering Practice Act". No warranty of any kind is made by TxDOT for any purpose whatsoever. TxDOT assumes no responsibility for the conversion of this standard to other formats or for incorrect results or damages resulting from its use.

TYPE 3 BARRICADES

1. Refer to the Compliant Work Zone Traffic Control Devices List (CWZTCD) for details of the Type 3 Barricades and a list of all materials used in the construction of Type 3 Barricades.
2. Type 3 Barricades shall be used at each end of construction projects closed to all traffic.
3. Barricades extending across a roadway should have stripes that slope downward in the direction toward which traffic must turn in detouring. When both right and left turns are provided, the chevron striping may slope downward in both directions from the center of the barricade. Where no turns are provided at a closed road, striping should slope downward in both directions toward the center of roadway.
4. Striping of rails, for the right side of the roadway, should slope downward to the left. For the left side of the roadway, striping should slope downward to the right.
5. Identification markings may be shown only on the back of the barricade rails. The maximum height of letters and/or company logos used for identification shall be 1".
6. Barricades shall not be placed parallel to traffic unless an adequate clear zone is provided.
7. Warning lights shall NOT be installed on barricades.
8. Where barricades require the use of weights to keep from turning over, the use of sandbags with dry, cohesionless sand is recommended. The sandbags will be tied shut to keep the sand from spilling and to maintain a constant weight. Sand bags shall not be stacked in a manner that covers any portion of a barricade rails reflective sheeting. Rock, concrete, iron, steel or other solid objects will NOT be permitted. Sandbags should weigh a minimum of 35 lbs and a maximum of 50 lbs. Sandbags shall be made of a durable material that tears upon vehicular impact. Rubber (such as tire inner tubes) shall not be used for sandbags. Sandbags shall only be placed along or upon the base supports of the device and shall not be suspended above ground level or hung with rope, wire, chains or other fasteners.
9. Sheeting for barricades shall be retroreflective Type A or Type B conforming to Departmental Material Specification DMS-8300 unless otherwise noted.

Barricades shall NOT be used as a sign support.

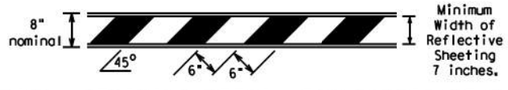

TYPICAL STRIPING DETAIL FOR BARRICADE RAIL

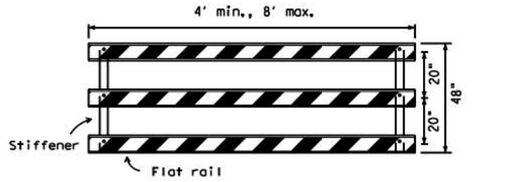

Stiffener may be inside or outside of support, but no more than 2 stiffeners shall be allowed on one barricade.

TYPICAL PANEL DETAIL FOR SKID OR POST TYPE BARRICADES

Each roadway of a divided highway shall be barricaded in the same manner.

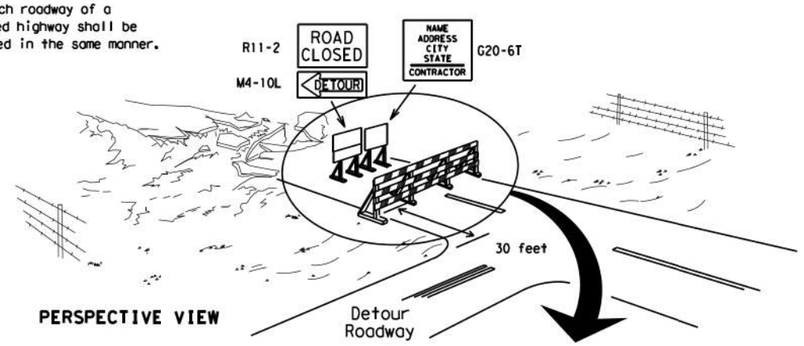

PERSPECTIVE VIEW

The three rails on Type 3 barricades shall be reflectorized orange and reflective white stripes on one side facing one-way traffic and both sides for two-way traffic.

Barricade striping should slant downward in the direction of detour.

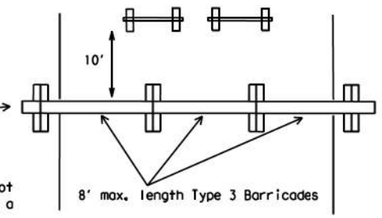

PLAN VIEW

1. Signs should be mounted on independent supports at a 7 foot mounting height in center of roadway. The signs should be a minimum of 10 feet behind Type 3 Barricades.
2. Advance signing shall be as specified elsewhere in the plans.

TYPE 3 BARRICADE (POST AND SKID) TYPICAL APPLICATION

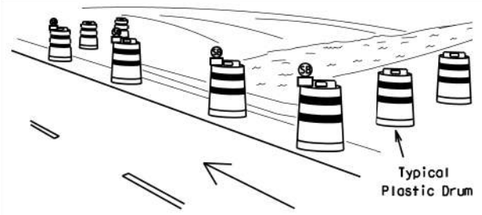

PERSPECTIVE VIEW

1. Where positive redirectional capability is provided, drums may be omitted.
2. Plastic construction fencing may be used with drums for safety as required in the plans.
3. Vertical Panels on flexible support may be substituted for drums when the shoulder width is less than 4 feet.
4. When the shoulder width is greater than 12 feet, steady-burn lights may be omitted if drums are used.
5. Drums must extend the length of the culvert widening.

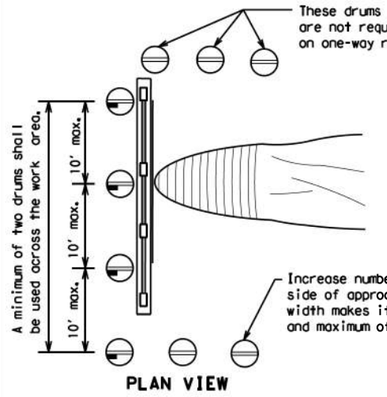

LEGEND	
	Plastic drum
	Plastic drum with steady burn light or yellow warning reflector
SB	Steady burn warning light or yellow warning reflector

PLAN VIEW

CULVERT WIDENING OR OTHER ISOLATED WORK WITHIN THE PROJECT LIMITS

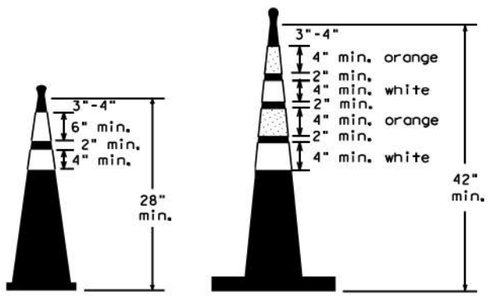

Two-Piece cones

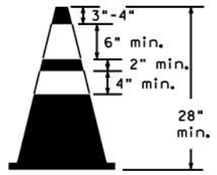

One-Piece cones

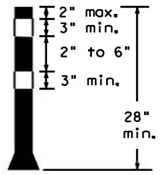

Tubular Marker

28" Cones shall have a minimum weight of 9 1/2 lbs.

42" 2-piece cones shall have a minimum weight of 30 lbs. including base.

1. Traffic cones and tubular markers shall be predominantly orange, and meet the height and weight requirements shown above.
2. One-piece cones have the body and base of the cone molded in one consolidated unit. Two-piece cones have a cone shaped body and a separate rubber base, or ballast, that is added to keep the device upright and in place.
3. Two-piece cones may have a handle or loop extending up to 8" above the minimum height shown, in order to aid in retrieving the device.
4. Cones or tubular markers shall have white or white and orange reflective bands as shown above. The reflective bands shall have a smooth, sealed outer surface and meet the requirements of Departmental Material Specification DMS-8300 Type A or Type B.
5. 28" cones and tubular markers are generally suitable for short duration and short-term stationary work as defined on BC(4). These should not be used for intermediate-term or long-term stationary work unless personnel is on-site to maintain them in their proper upright position.
6. 42" two-piece cones, vertical panels or drums are suitable for all work zone durations.
7. Cones or tubular markers used on each project should be of the same size and shape.

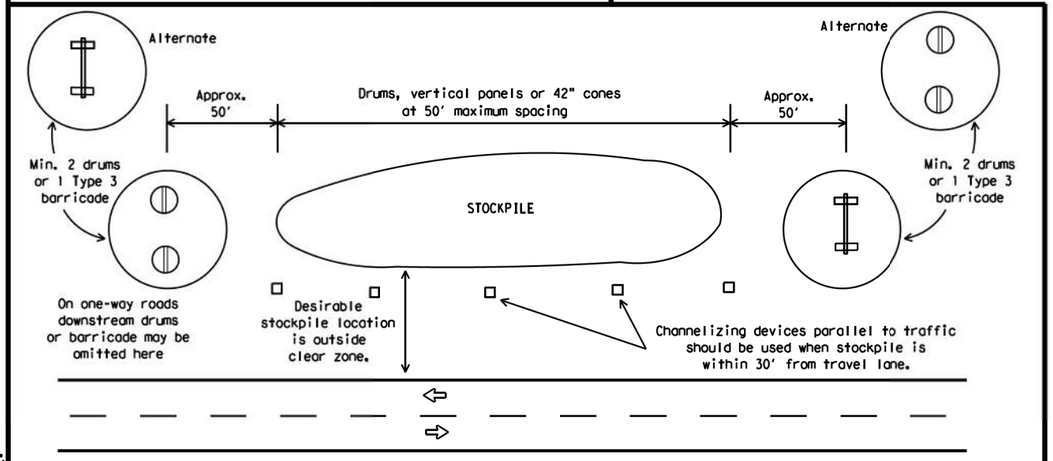

TRAFFIC CONTROL FOR MATERIAL STOCKPILES

SHEET 10 OF 12

Texas Department of Transportation

Traffic Safety Division Standard

BARRICADE AND CONSTRUCTION CHANNELIZING DEVICES

BC(10)-21

FILE: bc-21.dgn	DN: TxDOT	CK: TxDOT	DW: TxDOT	CK: TxDOT
© TxDOT November 2002	CONT	SECT	JOB	HIGHWAY
REVISIONS 9-07 8-14 7-13 5-21	DIST	COUNTY		SHEET NO. 34

DATE:
FILE:

104

DISCLAIMER:
The use of this standard is governed by the "Texas Engineering Practice Act". No warranty of any kind is made by TxDOT for any purpose whatsoever. TxDOT assumes no responsibility for the conversion of this standard to other formats or for incorrect results or damages resulting from its use.

WORK ZONE PAVEMENT MARKINGS

GENERAL

1. The Contractor shall be responsible for maintaining work zone and existing pavement markings, in accordance with the standard specifications and special provisions, on all roadways open to traffic within the CSJ limits unless otherwise stated in the plans.
2. Color, patterns and dimensions shall be in conformance with the "Texas Manual on Uniform Traffic Control Devices" (TMUTCD).
3. Additional supplemental pavement marking details may be found in the plans or specifications.
4. Pavement markings shall be installed in accordance with the TMUTCD and as shown on the plans.
5. When short term markings are required on the plans, short term markings shall conform with the TMUTCD, the plans and details as shown on the Standard Plan Sheet WZ(STPM).
6. When standard pavement markings are not in place and the roadway is opened to traffic, DO NOT PASS signs shall be erected to mark the beginning of the sections where passing is prohibited and PASS WITH CARE signs at the beginning of sections where passing is permitted.
7. All work zone pavement markings shall be installed in accordance with Item 662, "Work Zone Pavement Markings."

RAISED PAVEMENT MARKERS

1. Raised pavement markers are to be placed according to the patterns on BC(12).
2. All raised pavement markers used for work zone markings shall meet the requirements of Item 672, "RAISED PAVEMENT MARKERS" and Departmental Material Specification DMS-4200 or DMS-4300.

PREFABRICATED PAVEMENT MARKINGS

1. Removable prefabricated pavement markings shall meet the requirements of DMS-8241.
2. Non-removable prefabricated pavement markings (foil back) shall meet the requirements of DMS-8240.

MAINTAINING WORK ZONE PAVEMENT MARKINGS

1. The Contractor will be responsible for maintaining work zone pavement markings within the work limits.
2. Work zone pavement markings shall be inspected in accordance with the frequency and reporting requirements of work zone traffic control device inspections as required by Form 599.
3. The markings should provide a visible reference for a minimum distance of 300 feet during normal daylight hours and 160 feet when illuminated by automobile low-beam headlights at night, unless sight distance is restricted by roadway geometrics.
4. Markings failing to meet this criteria within the first 30 days after placement shall be replaced at the expense of the Contractor as per Specification Item 662.

REMOVAL OF PAVEMENT MARKINGS

1. Pavement markings that are no longer applicable, could create confusion or direct a motorist toward or into the closed portion of the roadway shall be removed or obliterated before the roadway is opened to traffic.
2. The above shall not apply to detours in place for less than three days, where flaggers and/or sufficient channelizing devices are used in lieu of markings to outline the detour route.
3. Pavement markings shall be removed to the fullest extent possible, so as not to leave a discernable marking. This shall be by any method approved by TxDOT Specification Item 677 for "Eliminating Existing Pavement Markings and Markers".
4. The removal of pavement markings may require resurfacing or seal coating portions of the roadway as described in Item 677.
5. Subject to the approval of the Engineer, any method that proves to be successful on a particular type pavement may be used.
6. Blast cleaning may be used but will not be required unless specifically shown in the plans.
7. Over-painting of the markings SHALL NOT BE permitted.
8. Removal of raised pavement markers shall be as directed by the Engineer.
9. Removal of existing pavement markings and markers will be paid for directly in accordance with Item 677, "ELIMINATING EXISTING PAVEMENT MARKINGS AND MARKERS," unless otherwise stated in the plans.
10. Black-out marking tape may be used to cover conflicting existing markings for periods less than two weeks when approved by the Engineer.

Temporary Flexible-Reflective Roadway Marker Tabs

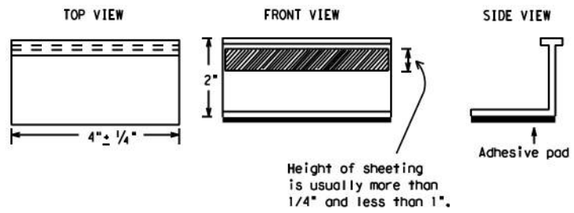

STAPLES OR NAILS SHALL NOT BE USED TO SECURE TEMPORARY FLEXIBLE-REFLECTIVE ROADWAY MARKER TABS TO THE PAVEMENT SURFACE

1. Temporary flexible-reflective roadway marker tabs used as guidemarks shall meet the requirements of DMS-8242.
2. Tabs detailed on this sheet are to be inspected and accepted by the Engineer or designated representative. Sampling and testing is not normally required, however at the option of the Engineer, either "A" or "B" below may be imposed to assure quality before placement on the roadway.
   A. Select five (5) or more tabs at random from each lot or shipment and submit to the Construction Division, Materials and Pavement Section to determine specification compliance.
   B. Select five (5) tabs and perform the following test. Affix five (5) tabs at 24 inch intervals on an asphaltic pavement in a straight line. Using a medium size passenger vehicle or pickup, run over the markers with the front and rear tires at a speed of 35 to 40 miles per hour, four (4) times in each direction. No more than one (1) out of the five (5) reflective surfaces shall be lost or displaced as a result of this test.
3. Small design variances may be noted between tab manufacturers.
4. See Standard Sheet WZ(STPM) for tab placement on new pavements. See Standard Sheet TCP(7-1) for tab placement on seal coat work.

RAISED PAVEMENT MARKERS USED AS GUIDEMARKS

1. Raised pavement markers used as guidemarks shall be from the approved product list, and meet the requirements of DMS-4200.
2. All temporary construction raised pavement markers provided on a project shall be of the same manufacturer.
3. Adhesive for guidemarks shall be bituminous material hot applied or butyl rubber pad for all surfaces, or thermoplastic for concrete surfaces.

Guidemarks shall be designated as:
YELLOW - (two amber reflective surfaces with yellow body).
WHITE - (one silver reflective surface with white body).

DEPARTMENTAL MATERIAL SPECIFICATIONS	
PAVEMENT MARKERS (REFLECTORIZED)	DMS-4200
TRAFFIC BUTTONS	DMS-4300
EPOXY AND ADHESIVES	DMS-6100
BITUMINOUS ADHESIVE FOR PAVEMENT MARKERS	DMS-6130
PERMANENT PREFABRICATED PAVEMENT MARKINGS	DMS-8240
TEMPORARY REMOVABLE, PREFABRICATED PAVEMENT MARKINGS	DMS-8241
TEMPORARY FLEXIBLE, REFLECTIVE ROADWAY MARKER TABS	DMS-8242

A list of prequalified reflective raised pavement markers, non-reflective traffic buttons, roadway marker tabs and other pavement markings can be found at the Material Producer List web address shown on BC(1).

Texas Department of Transportation

Traffic Safety Division Standard

BARRICADE AND CONSTRUCTION PAVEMENT MARKINGS

BC(11)-21

FILE: bc-21.dgn	DN: TxDOT	CK: TxDOT	DW: TxDOT	CK: TxDOT
©TxDOT February 1998	CONT	SECT	JOB	HIGHWAY
REVISIONS 2-98 9-07 5-21 1-02 7-13 11-02 8-14	DIST	COUNTY		SHEET NO. 35

105

DATE:
FILE:

DISCLAIMER:
The use of this standard is governed by the "Texas Engineering Practice Act". No warranty of any kind is made by TxDOT for any purpose whatsoever. TxDOT assumes no responsibility for the conversion of this standard to other formats or for incorrect results or damages resulting from its use.

PAVEMENT MARKING PATTERNS



REFLECTORIZED PAVEMENT MARKINGS - PATTERN A

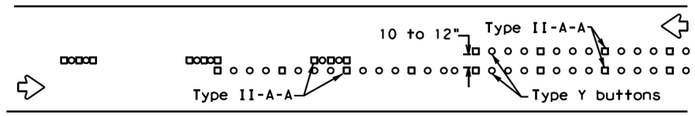

RAISED PAVEMENT MARKERS - PATTERN A

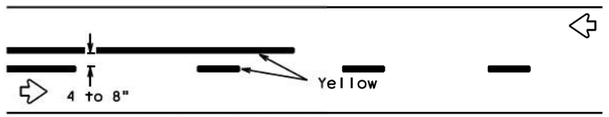

REFLECTORIZED PAVEMENT MARKINGS - PATTERN B

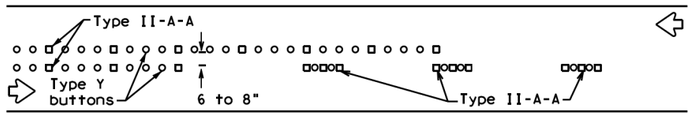

RAISED PAVEMENT MARKERS - PATTERN B

Pattern A is the TXDOT Standard, however Pattern B may be used if approved by the Engineer.
Prefabricated markings may be substituted for reflectorized pavement markings.

CENTER LINE & NO-PASSING ZONE BARRIER LINES FOR TWO-LANE, TWO-WAY HIGHWAYS

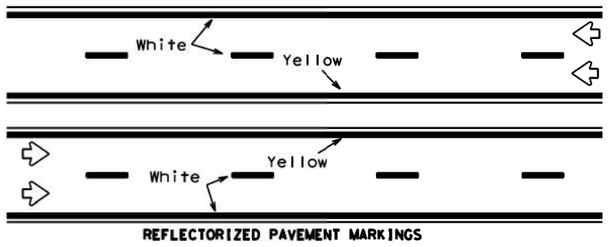

REFLECTORIZED PAVEMENT MARKINGS

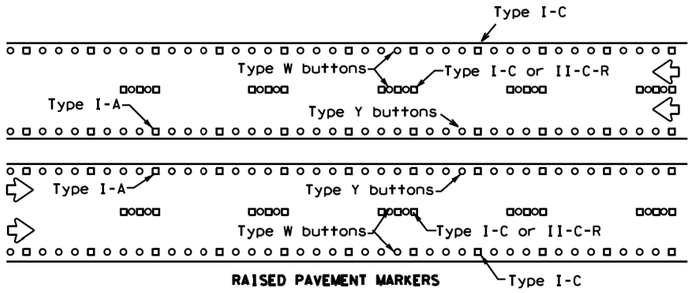

RAISED PAVEMENT MARKERS

Prefabricated markings may be substituted for reflectorized pavement markings.

EDGE & LANE LINES FOR DIVIDED HIGHWAY

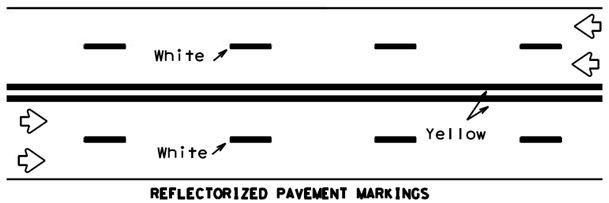

REFLECTORIZED PAVEMENT MARKINGS

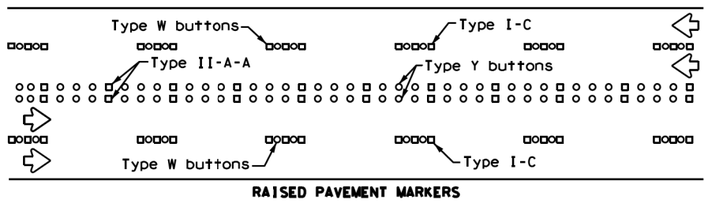

RAISED PAVEMENT MARKERS

Prefabricated markings may be substituted for reflectorized pavement markings.

LANE & CENTER LINES FOR MULTILANE UNDIVIDED HIGHWAYS

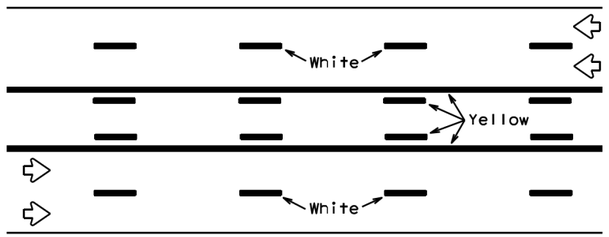

REFLECTORIZED PAVEMENT MARKINGS

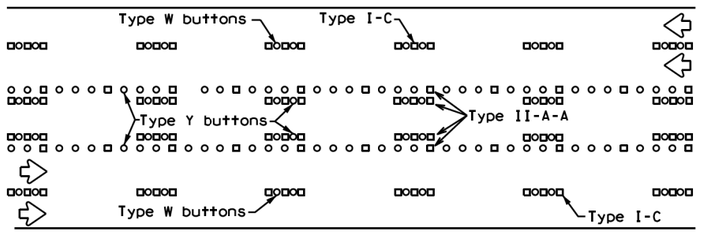

RAISED PAVEMENT MARKERS

Prefabricated markings may be substituted for reflectorized pavement markings.

TWO-WAY LEFT TURN LANE

STANDARD WORK ZONE PAVEMENT MARKINGS DETAILS

SOLID LINES

DOUBLE NO-PASSING LINE

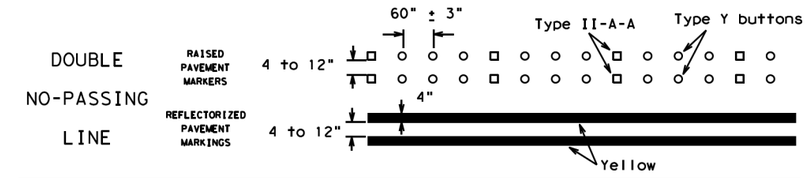

EDGE LINE OR SINGLE NO-PASSING LINE

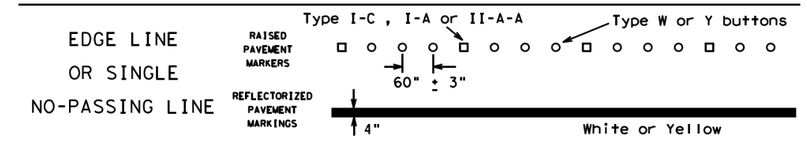

WIDE LINE

(FOR LEFT TURN CHANNELIZING LINE OR CHANNELIZING LINE USED TO DISCOURAGE LANE CHANGING.)

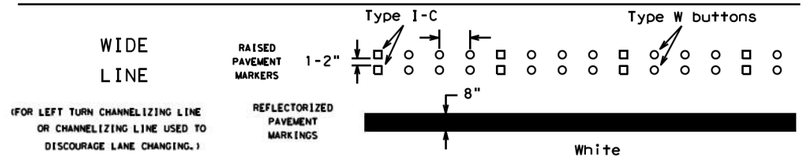

BROKEN LINES

CENTER LINE OR LANE LINE

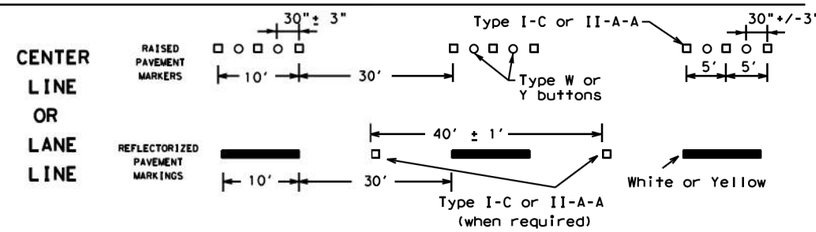

AUXILIARY OR LANEDROP LINE

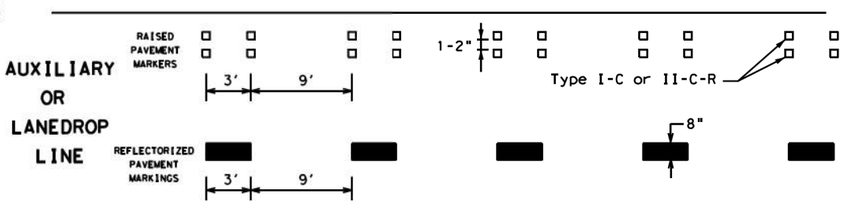

REMOVABLE MARKINGS WITH RAISED PAVEMENT MARKERS

If raised pavement markers are used to supplement REMOVABLE markings, the markers shall be applied to the top of the tape at the approximate mid length of tape used for broken lines or at 20 foot spacing for solid lines. This allows an easier removal of raised pavement markers and tape.

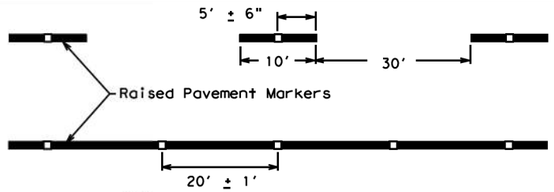

Centerline only - not to be used on edge lines

Raised pavement markers used as standard pavement markings shall be from the approved products list and meet the requirements of Item 672 "RAISED PAVEMENT MARKERS."

Texas Department of Transportation

Traffic Safety Division Standard

BARRICADE AND CONSTRUCTION PAVEMENT MARKING PATTERNS

BC(12)-21

FILE: bc-21.dgn	DN: TxDOT	CK: TxDOT	DW: TxDOT	CK: TxDOT
©TxDOT February 1998	CONT	SECT	JOB	HIGHWAY
REVISIONS 1-97 9-07 5-21 2-98 7-13 11-02 8-14	DIST	COUNTY		SHEET NO. 36

106

DATE:
FILE:

DISCLAIMER:
The use of this standard is governed by the "Texas Engineering Practice Act". No warranty of any kind is made by TxDOT for any purpose whatsoever. TxDOT assumes no responsibility for the conversion of this standard to other formats or for incorrect results or damages resulting from its use.

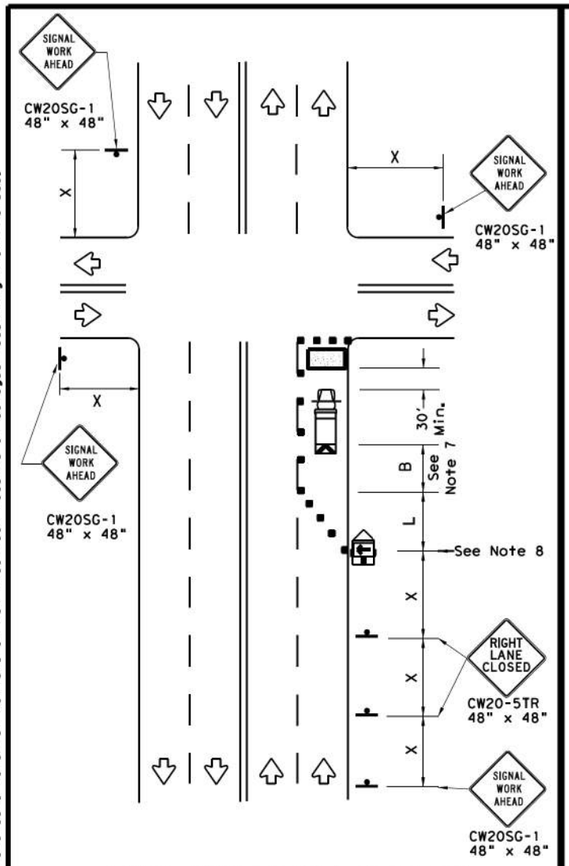

NEAR SIDE LANE CLOSURE

SHORT DURATION OR SHORT TERM STATIONARY

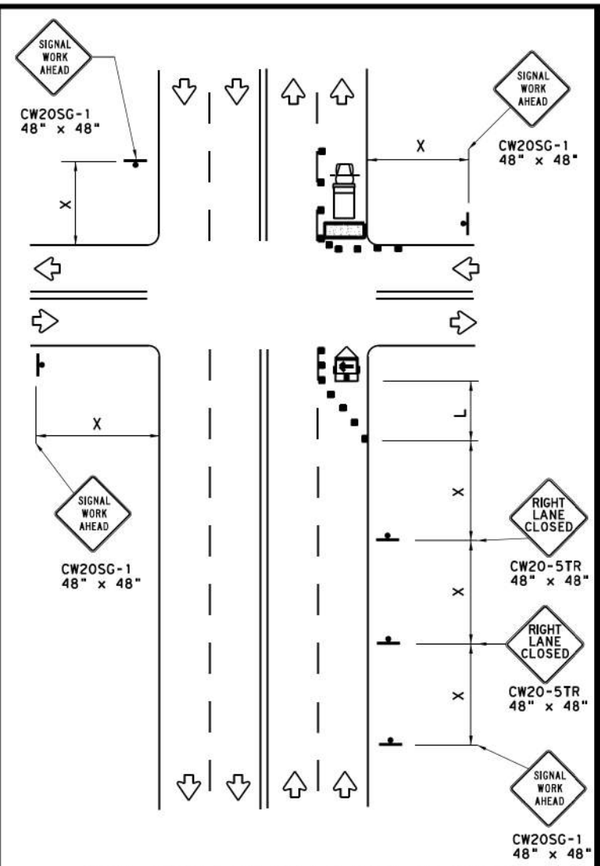

FAR SIDE RIGHT LANE CLOSURE

SHORT DURATION OR SHORT TERM STATIONARY

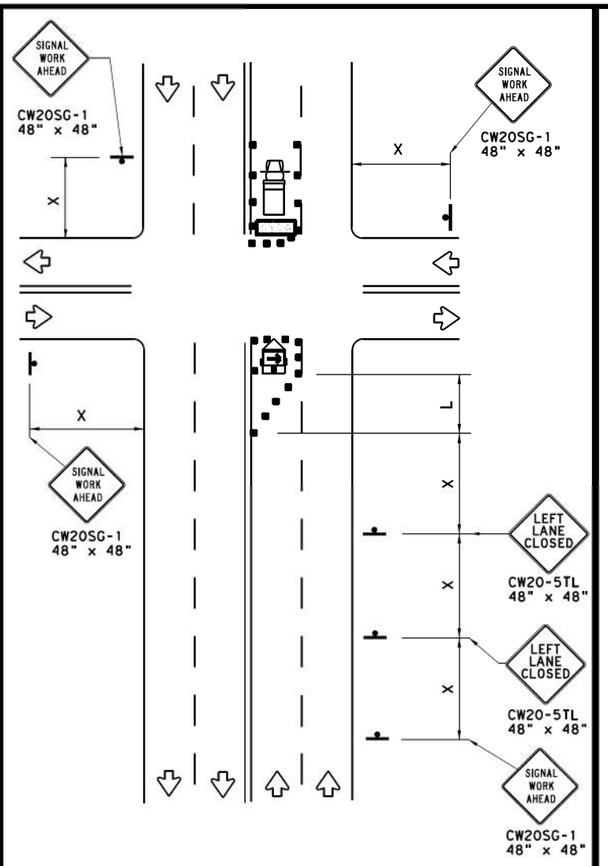

FAR SIDE LEFT LANE CLOSURE

SHORT DURATION OR SHORT TERM STATIONARY

LEGEND			
	Type 3 Barricade		Channelizing Devices
	Heavy Work Vehicle		Truck Mounted Attenuator (TMA)
	Trailer Mounted Flashing Arrow Board	M	Portable Changeable Message Sign (PCMS)
	Sign		Traffic Flow
	Flag		Flagger

Posted Speed *	Formula	Minimum Desirable Taper Lengths ** 10' Offset	11' Offset	12' Offset	Suggested Maximum Spacing of Channelizing Devices On a Taper	On a Tangent	Minimum Sign Spacing "X" Distance	Suggested Longitudinal Buffer Space "B"
30	$L=\frac{WS^2}{60}$	150'	165'	180'	30'	60'	120'	90'
35		205'	225'	245'	35'	70'	160'	120'
40		265'	295'	320'	40'	80'	240'	155'
45	L=WS	450'	495'	540'	45'	90'	320'	195'
50		500'	550'	600'	50'	100'	400'	240'
55		550'	605'	660'	55'	110'	500'	295'
60		600'	660'	720'	60'	120'	600'	350'
65		650'	715'	780'	65'	130'	700'	410'
70		700'	770'	840'	70'	140'	800'	475'
75		750'	825'	900'	75'	150'	900'	540'

* Conventional Roads Only

** Taper lengths have been rounded off.
L=Length of Taper(FT) W=Width of Offset(FT) S=Posted Speed(MPH)

WORKERS IN BUCKET TRUCKS SHALL NOT WORK ABOVE OPEN LANES OF TRAFFIC.

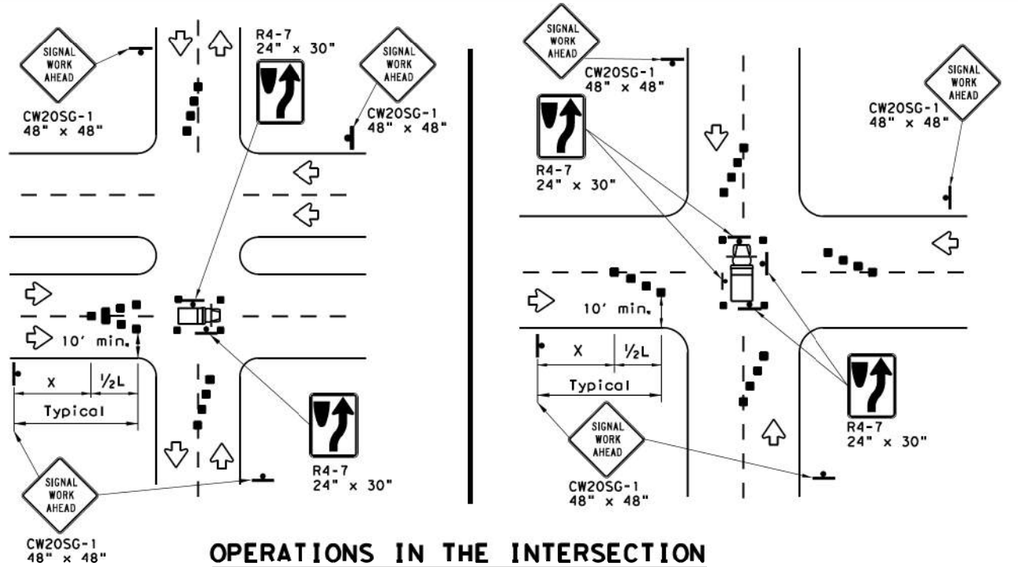

OPERATIONS IN THE INTERSECTION

SHORT DURATION

GENERAL NOTES

1. The minimum size channelizing device is the 28" cone. 42" Two-piece cones, drums, vertical panels or barricades will be required when the device must be left unattended at night.
2. Obstructions or hazards at the work area shall be clearly marked and delineated at all times.
3. Flaggers and Flagger Symbol (CW20-7) signs may be required according to field conditions.
4. Vehicles parked in roadway shall be equipped with at least two high intensity rotating, flashing, oscillating or strobe type lights.
5. High level warning devices (flag trees) may be used at corners of the vehicle.
6. When work operations are performed on existing signals, the signals may be placed in flashing red mode when approved by the engineer. If existing signals do not have power, All-Way Stop (R1-1 and R1-3P) signs may be implemented when approved by the engineer.
7. For Short-Term Stationary work the buffer space "B" from the above table should be used if field conditions permit. For Short Duration (less than 1 hour) any buffer space provided will enhance the safety of the setup.
8. The arrow board at this location may be omitted for Short Duration work if the work vehicle has an arrow board in operation. As an option, the arrow board may be placed at the end of the taper in the closed lane if space is not available at the beginning of the taper.
9. Signs and devices for the NEAR SIDE LANE CLOSURE may be altered for a left lane closure by using a LEFT LANE CLOSED (CW20-5TL) and adding channelizing devices on the centerline to protect the work space from opposing traffic.

SHEET 1 OF 2

Texas Department of Transportation

Traffic Operations Division Standard

TRAFFIC SIGNAL WORK TYPICAL DETAILS

WZ(BTS-1)-13

FILE: wzbts-13.dgn	DN: TxDOT	CK: TxDOT	DW: TxDOT	CK: TxDOT
©TxDOT April 1992	CONT	SECT	JOB	HIGHWAY
REVISIONS				
2-98 10-99 7-13	DIST	COUNTY		SHEET NO.
4-98 3-03				37

DATE:
FILE:

DISCLAIMER:
The use of this standard is governed by the "Texas Engineering Practice Act". No warranty of any kind is made by TxDOT for any purpose whatsoever. TxDOT assumes no responsibility for the conversion of this standard to other formats or for incorrect results or damages resulting from its use.

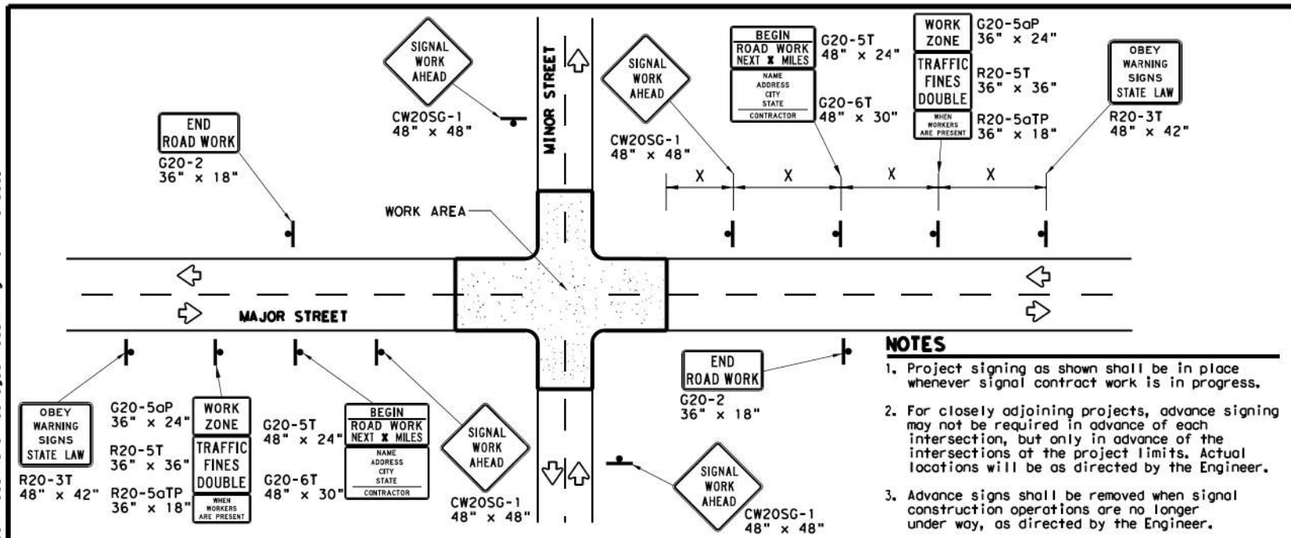

TYPICAL ADVANCE SIGNAL PROJECT SIGNING

FOR LONG TERM and INTERMEDIATE-TERM STATIONARY WORK OPERATIONS

NOTES

1. Project signing as shown shall be in place whenever signal contract work is in progress.
2. For closely adjoining projects, advance signing may not be required in advance of each intersection, but only in advance of the intersections at the project limits. Actual locations will be as directed by the Engineer.
3. Advance signs shall be removed when signal construction operations are no longer under way, as directed by the Engineer.
4. Warning sign spacing shown is typical for both directions.
5. See the Table on sheet 1 of 2 for Typical warning sign spacing.

GENERAL NOTES FOR WORK ZONE SIGNS

1. Signs shall be installed and maintained in a straight and plumb condition.
2. Wooden sign posts shall be painted white.
3. Barricades shall NOT be used as sign supports.
4. Nails shall NOT be used to attach signs to any support.
5. All signs shall be installed in accordance with the plans or as directed by the Engineer.
6. The Contractor shall furnish the sign design shown in the plans or in the "Standard Highway Sign Designs for Texas" (SHSD).
7. The Contractor shall furnish sign supports and substrates listed in the "Compliant Work Zone Traffic Control Device List" (CWZTCD), installed as per the manufacturer's recommendations.
8. Temporary signs that have damaged or cracked substrates and/or damaged or marred reflective sheeting shall be replaced as directed by the Engineer.
9. Identification markings may be shown only on the back of the sign substrate. The maximum height of letters and/or company logos used for identification shall be 1".
10. Damaged wood posts shall be replaced. Splicing wood posts will not be allowed.

DURATION OF WORK

1. Work zone durations are defined in Part 6, Section 6G.02 of the Texas Manual on Uniform Traffic Control Devices (TMUTCD).

SIGN MOUNTING HEIGHT

1. Sign height of Long-term/Intermediate-term warning signs shall be as shown on Figure 6F-1 of the TMUTCD.
2. Sign height of Short-term/Short Duration warning signs shall be as shown on Figure 6F-2 of the TMUTCD.
3. Regulatory signs shall be mounted at least 7 feet, but not more than 9 feet, above the paved surface regardless of work duration.

REMOVING OR COVERING

1. When sign messages may be confusing or do not apply, the signs shall be removed or completely covered, unless otherwise approved by the Engineer.
2. When signs are covered, the material used shall be opaque, such as heavy mil black plastic, or other materials which will cover the entire sign face and maintain their opaque properties under automobile headlights at night without damaging the sign sheeting. Burlap, or heavy materials such as plywood or aluminum shall not be used to cover signs.
3. Duct tape or other adhesive material shall NOT be affixed to a sign face.
4. Signs and anchor stubs shall be removed and holes back filled upon completion of the work.

REFLECTIVE SHEETING

1. All signs shall be retroreflective and constructed of sheeting meeting the requirements of the DMS and color usage table shown on this sheet.

SIGN SUPPORT WEIGHTS

1. Weights used to keep signs from turning over should be sandbags filled with dry, cohesionless material.
2. The sandbags will be tied shut to keep the sand from spilling and to maintain a constant weight.
3. Rock, concrete, iron, steel or other solid objects will not be permitted for use as sign support weights.
4. Sandbags should weigh a minimum of 35 lbs and a maximum of 50 lbs.
5. Sandbags shall be made of a durable material that tears upon vehicular impact. Rubber, such as tire inner tubes, shall not be used.
6. Rubber ballasts designed for channelizing devices should not be used for ballast on portable sign supports. Sign supports designed and manufactured with rubber bases may be used when shown on the CWZTCD list.
7. Sandbags shall only be placed along or laid over the base supports of the traffic control device and shall not be suspended above ground level or hung with rope, wire, chains or other fastners. Sandbags shall be placed along the length of the skids to weigh down the sign support.
8. Sandbags shall NOT be placed under the skid and shall not be used to level sign supports placed on slopes.

LEGEND	
	Sign
	Channelizing Devices
	Type 3 Barricade

DEPARTMENTAL MATERIAL SPECIFICATIONS	
SIGN FACE MATERIALS	DMS-8300
FLEXIBLE ROLL-UP REFLECTIVE SIGNS	DMS-8310

COLOR	USAGE	SHEETING MATERIAL
ORANGE	BACKGROUND	TYPE B_{FL} OR TYPE C_{FL} SHEETING
WHITE	BACKGROUND	TYPE A SHEETING
BLACK	LEGEND & BORDERS	ACRYLIC NON-REFLECTIVE SHEETING

Only pre-qualified products shall be used. A copy of the "Compliant Work Zone Traffic Control Devices List" (CWZTCD) describes pre-qualified products and their sources and may be found at the following web address:
http://www.txdot.gov/txdot_library/publications/construction.htm

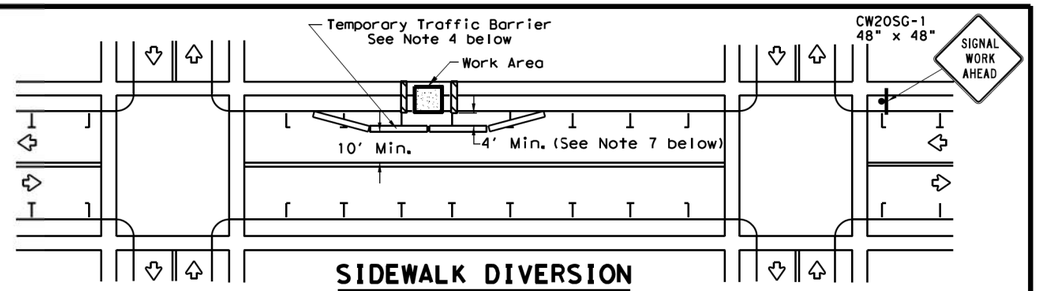

SIDEWALK DIVERSION

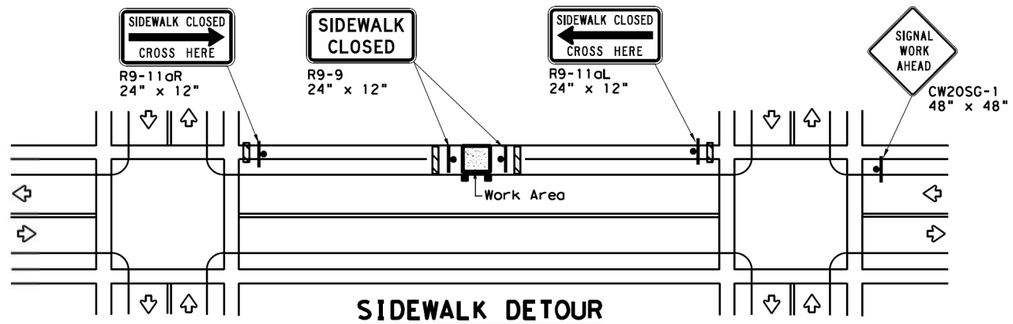

SIDEWALK DETOUR

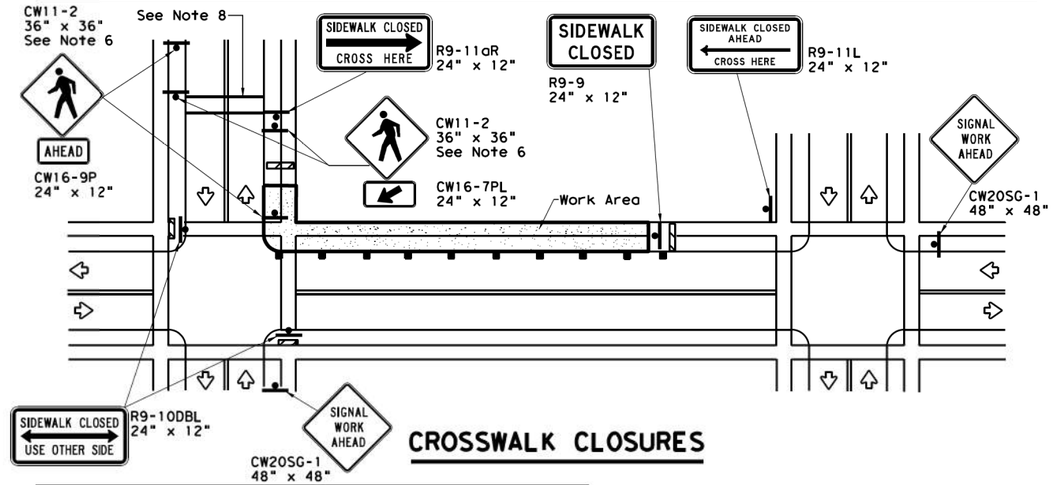

CROSSWALK CLOSURES

PEDESTRIAN CONTROL

1. Holes, trenches or other hazards shall be adequately protected by covering, delineating or surrounding the hazard with orange plastic pedestrian fencing or longitudinal channelizing devices, or as directed by the Engineer.
2. "CROSSWALK CLOSURES" as detailed above will require the Engineer's approval prior to installation.
3. R9 series signs shown may be placed on supports detailed on the BC standards or CWZTCD list, or when fabricated from approved lightweight plastic substrates, they may be mounted on top of a plastic drum at or near the location shown.
4. For speeds less than 45 mph longitudinal channelizing devices may be used instead of traffic barriers when approved by the Engineer. Attenuation of blunt ends and installation of water filled devices shall be as per BC(9) and manufacturer's recommendations.
5. Location of devices are for general guidance. Actual device spacing and location must be field adjusted to meet actual conditions.
6. Where pedestrians with visual disabilities normally use the closed sidewalk Detectable Pedestrian Barricades should be used instead of the Type 3 Barricades shown.
7. The width of existing sidewalk should be maintained if practical.
8. Pavement markings for mid-block crosswalks shall be paid for under the appropriate bid items.
9. When crosswalks or other pedestrian facilities are closed or relocated, temporary facilities shall be detectable and shall include accessibility features consistent with the features present in the existing pedestrian facility.

Texas Department of Transportation

Traffic Operations Division Standard

TRAFFIC SIGNAL WORK BARRICADES AND SIGNS

WZ(BTS-2)-13

FILE: wzbts-13.dgn	DN: TxDOT	CK: TxDOT	DW: TxDOT	CK: TxDOT
©TxDOT April 1992	CONT	SECT	JOB	HIGHWAY
REVISIONS				
2-98 10-99 7-13	DIST	COUNTY		SHEET NO.
4-98 3-03				38

DATE:
FILE:

DISCLAIMER:
The use of this standard is governed by the "Texas Engineering Practice Act". No warranty of any kind is made by TxDOT for any purpose whatsoever. TxDOT assumes no responsibility for the conversion of this standard to other formats or for incorrect results or damages resulting from its use.

DATE:
FILE:

WORK ZONE SHORT TERM PAVEMENT MARKINGS DETAILS

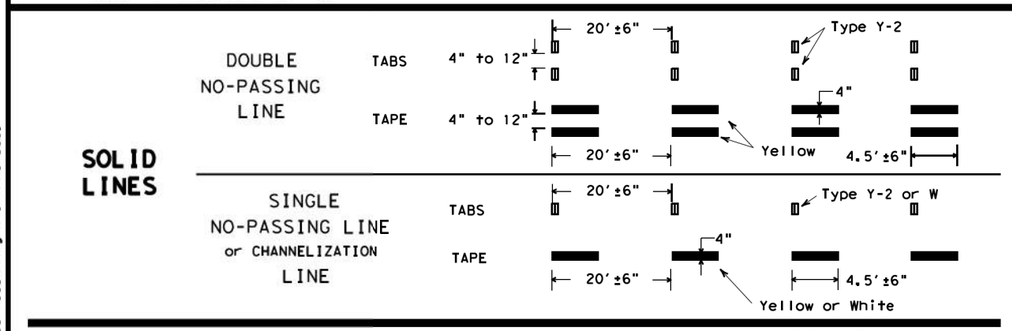

NOTES:

1. Short term pavement markings may be prefabricated markings (stick down tape) or temporary flexible-reflective roadway marker tabs unless otherwise specified elsewhere in plans.
2. Short term pavement markings shall NOT be used to simulate edge lines.
3. Dimensions indicated on this sheet are typical and approximate. Variations in size and height may occur between markers or devices made by manufacturers, by as much as 1/4 inch, unless otherwise noted.
4. Temporary flexible-reflective roadway marker tabs will require normal maintenance replacement when used on roadways with an ADT per lane of up to 7500 vehicles with no more than 10% truck mix. When roadways exceed these values, additional maintenance replacement of devices should be planned.
5. No segment of roadway open to traffic shall remain without permanent pavement markings for a period greater than 14 calendar days. The Contractor will be responsible for maintaining short term pavement markings until permanent pavement markings are in place. When the Contractor is responsible for placement of permanent pavement markings, no segment of roadway shall remain without permanent pavement markings for a period greater than 14 calendar days unless weather conditions prohibit placement. Permanent pavement markings shall be placed as soon as weather permits.
6. For two lane, two-way roadways, DO NOT PASS signs shall be erected to mark the beginning of sections where passing is prohibited and PASS WITH CARE signs shall be erected to mark the beginning of sections where passing is permitted. Signs shall be in accordance with the "Texas Manual on Uniform Traffic Control Devices" (TMUTCD) and may be used to indicate the limits of no-passing zones for up to 14 calendar days. Permanent pavement markings should then be placed.
7. For low volume two lane, two-way roadways of 4000 ADT or less, no-passing lines may be omitted when approved by the Engineer. DO NOT PASS and PASS WITH CARE signs shall be erected (see note 6).
8. For exit gores where a lane is being dropped place wide gore markings or retroreflective channelizing devices to guide motorist through the exit. If channelizing devices are to be used it should be noted elsewhere in the plans. One piece cones are not allowed for this purpose.

TEMPORARY FLEXIBLE, REFLECTIVE ROADWAY MARKER TABS (TABS)

1. Temporary flexible-reflective roadway marker tabs detailed on this sheet will be designated Type Y-2 (two amber reflective surfaces with yellow body); Type Y (one amber reflective surface with yellow body); and Type W (one white or silver reflective surface with white body). Additional details may be found on BC(11).
2. Tabs shall meet requirements of Departmental Material Specification DMS-8242.
3. When dry, tabs shall be visible for a minimum distance of 200 feet during normal daylight hours and when illuminated by automobile low-beam head light at night, unless sight distance is restricted by roadway geometrics.
4. No two consecutive tabs nor four tabs per 1000 feet of line shall be missing or fail to meet the visual performance requirements of Note 3.

WORK ZONE SHORT TERM PAVEMENT MARKINGS PATTERNS

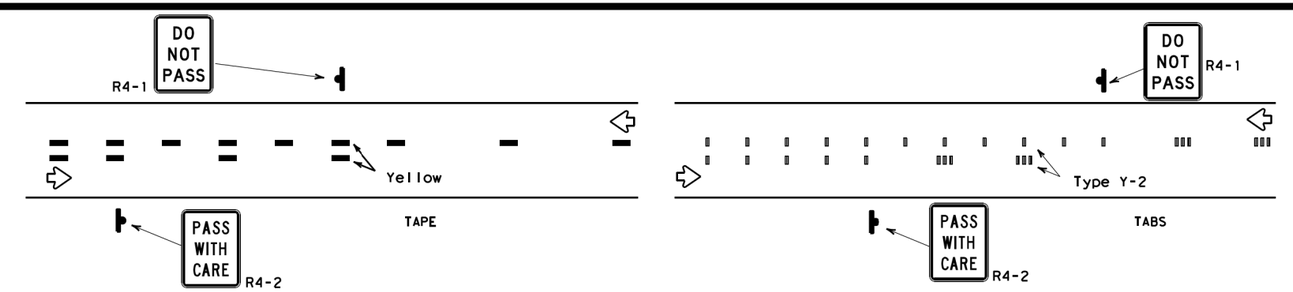

CENTER LINE & NO-PASSING ZONE BARRIER LINES FOR TWO LANE TWO-WAY HIGHWAYS

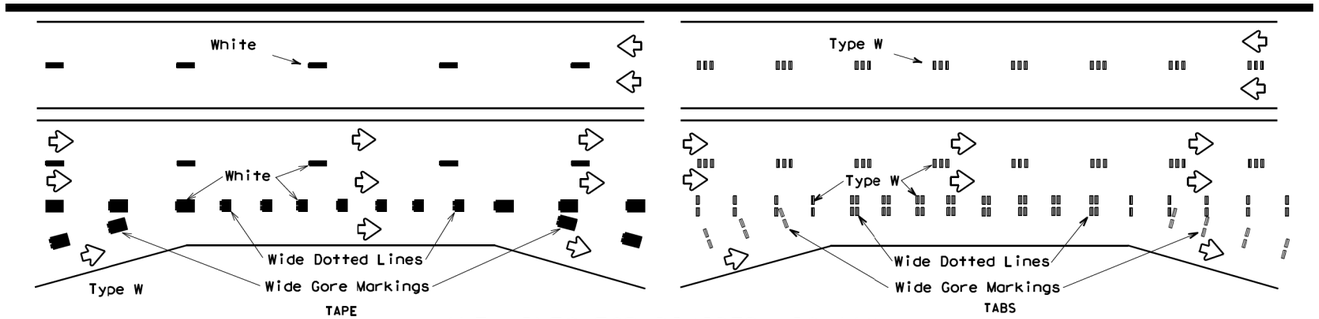

LANE LINES FOR DIVIDED HIGHWAY

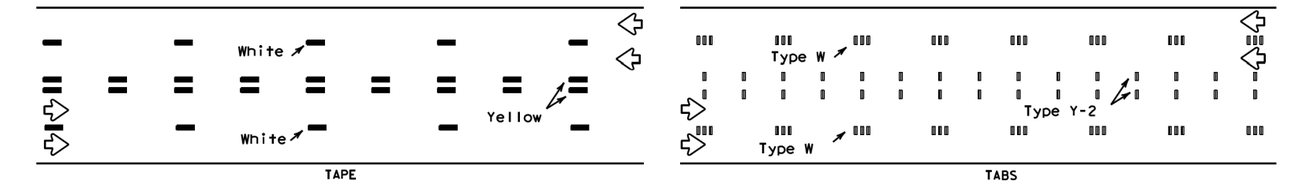

LANE & CENTER LINES FOR MULTILANE UNDIVIDED HIGHWAYS

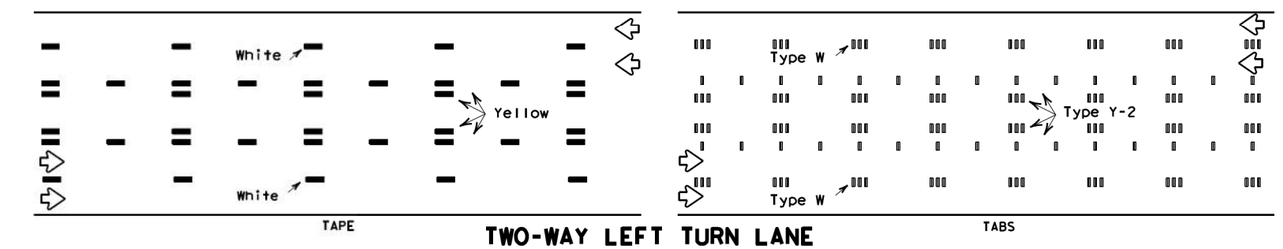

TWO-WAY LEFT TURN LANE

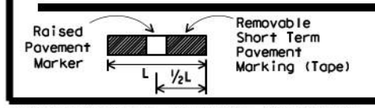

If raised pavement markers are used to supplement REMOVABLE short term markings, the markers shall be applied to the top of the tape at the approximate mid length of the tape. This allows an easier removal of raised markers and tape.

PREFABRICATED PAVEMENT MARKINGS

1. Temporary Removable Prefabricated Pavement Markings shall meet the requirements of DMS-8241.
2. Non-removable Prefabricated Pavement Markings shall meet the requirements of either DMS-8240 "Permanent Prefabricated Pavement Markings" or DMS-8243 "Temporary Costruction-Grade Prefabricated Pavement Markings."

RAISED PAVEMENT MARKERS

1. All raised pavement markers used for work zone markings shall meet the requirements of Item 672, "RAISED PAVEMENT MARKERS" and DMS-4200.

DEPARTMENTAL MATERIAL SPECIFICATIONS (DMS) & MATERIAL PRODUCER LISTS (MPL)

1. DMSs referenced above can be found along with embedded links to their respective MPLs at the following website:
   http://www.txdot.gov/business/contractors_consultants/material_specifications/default.htm

Texas Department of Transportation

Traffic Operations Division Standard

WORK ZONE SHORT TERM PAVEMENT MARKINGS

WZ(STPM)-13

FILE:	wzstpm-13.dgn	DN: TxDOT	CK: TxDOT	DW: TxDOT	CK: TxDOT
©TxDOT	April 1992	CONT	SECT	JOB	HIGHWAY
REVISIONS					
1-97		DIST	COUNTY		SHEET NO.
3-03					39
7-13					

DISCLAIMER:
The use of this standard is governed by the "Texas Engineering Practice Act". No warranty of any kind is made by TxDOT for any purpose whatsoever. TxDOT assumes no responsibility for the conversion of this standard to other formats or for incorrect results or damages resulting from its use.

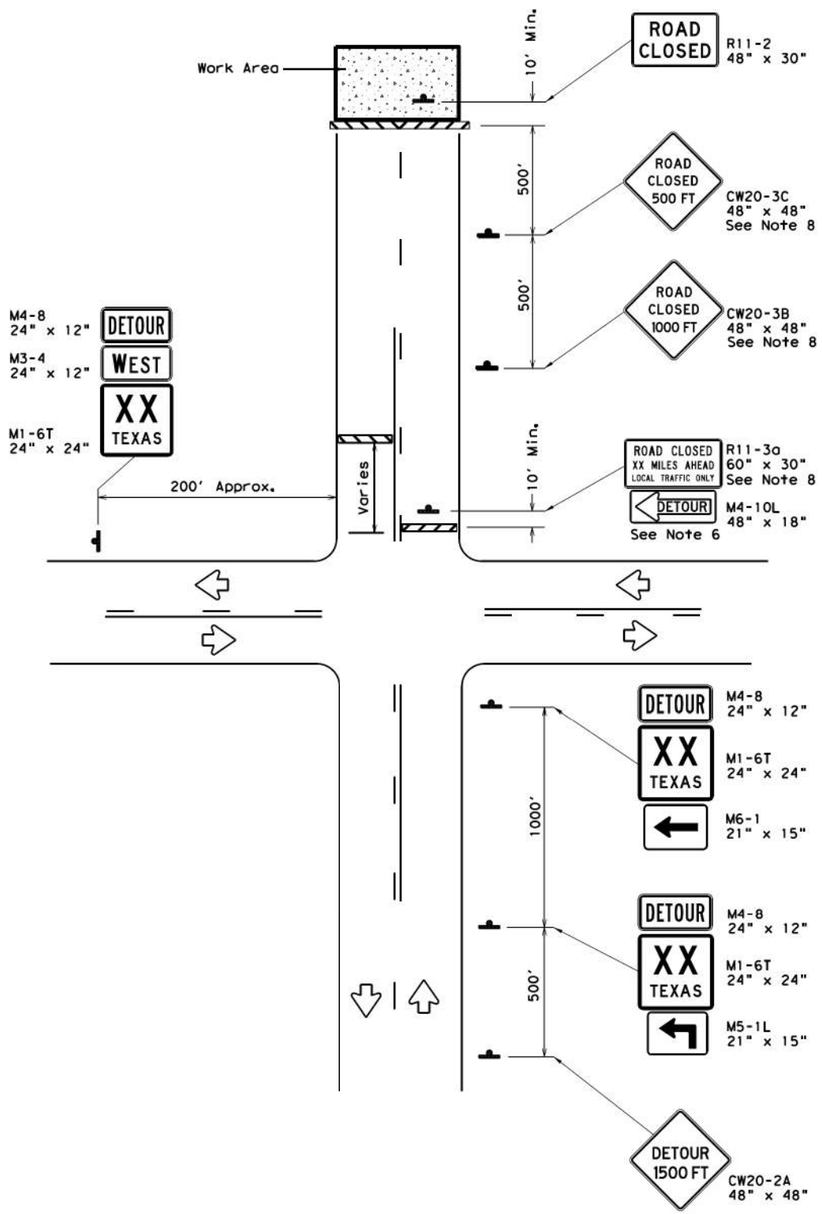

ROAD CLOSURE BEYOND THE INTERSECTION

Signing for a Numbered Route with an Off-Site Detour

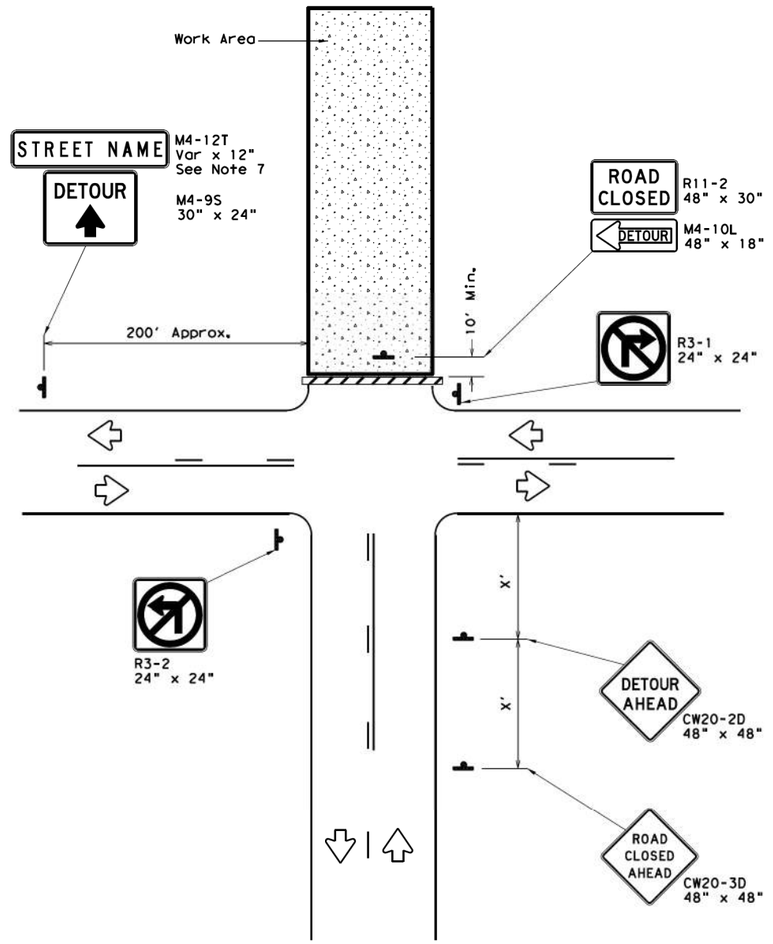

ROAD CLOSURE AT THE INTERSECTION

Signing for an Un-numbered Route with an Off-Site Detour

LEGEND	
	Type 3 Barricade
	Sign

Posted Speed *	Minimum Sign Spacing "X" Distance
30	120'
35	160'
40	240'
45	320'
50	400'
55	500'
60	600'
65	700'
70	800'
75	900'

* Conventional Roads Only

GENERAL NOTES

1. This sheet is intended to provide details for temporary work zone road closures. For permanent road closure details see the D&OM standards.
2. Barricades used shall meet the requirements shown on Barricade and Construction Standard BC(10) and listed on the Compliant Work Zone Traffic Control Devices list (CWZTCD).
3. Stockpiled materials shall not be placed on the traffic side of barricades.
4. Barricades at the road closure should extend from pavement edge to pavement edge.
5. Detour signing shown is intended to illustrate the type of signing that is appropriate for numbered routes or un-numbered routes as labeled. It does not indicate the full extent of detour signing required. Detour routes should be signed as shown elsewhere in the plans.
6. If the road is open for a significant distance beyond the intersection or there are significant origin/destination points beyond the intersection, the signs and barricades at this location should be located at the edge of the traveled way.
7. The Street Name (M4-12T) sign is to be placed above the DETOUR (M4-9S) sign.
8. For urban areas where there is a shorter distance between the intersection and the actual closure location, the ROAD CLOSED XX MILES AHEAD (R11-3a) sign may be replaced with a ROAD CLOSED TO THRU TRAFFIC (R11-4) sign. If adequate space does not exist between the intersection and the closure a single ROAD CLOSED AHEAD (CW20-3D) sign spaced as per the table above may replace the ROAD CLOSED 1000 FT (CW20-3B) and ROAD CLOSED 500 FT (CW20-3C) signs.
9. Signs and barricades shown shall be subsidiary to Item 502. Locations where these details will be required shall be as shown elsewhere in the plans.

Texas Department of Transportation

Traffic Operations Division Standard

WORK ZONE ROAD CLOSURE DETAILS

WZ(RCD)-13

FILE: wzrcd-13.dgn	DN: TxDOT	CK: TxDOT	DW: TxDOT	CK: TxDOT
©TxDOT August 1995	CONT	SECT	JOB	HIGHWAY
REVISIONS				
1-97 4-98 7-13	DIST	COUNTY		SHEET NO.
2-98 3-03				40

DATE:
FILE:

DISCLAIMER:
The use of this standard is governed by the "Texas Engineering Practice Act". No warranty of any kind is made by TxDOT for any purpose whatsoever. TxDOT assumes no responsibility for the conversion of this standard to other formats or for incorrect results or damages resulting from its use.

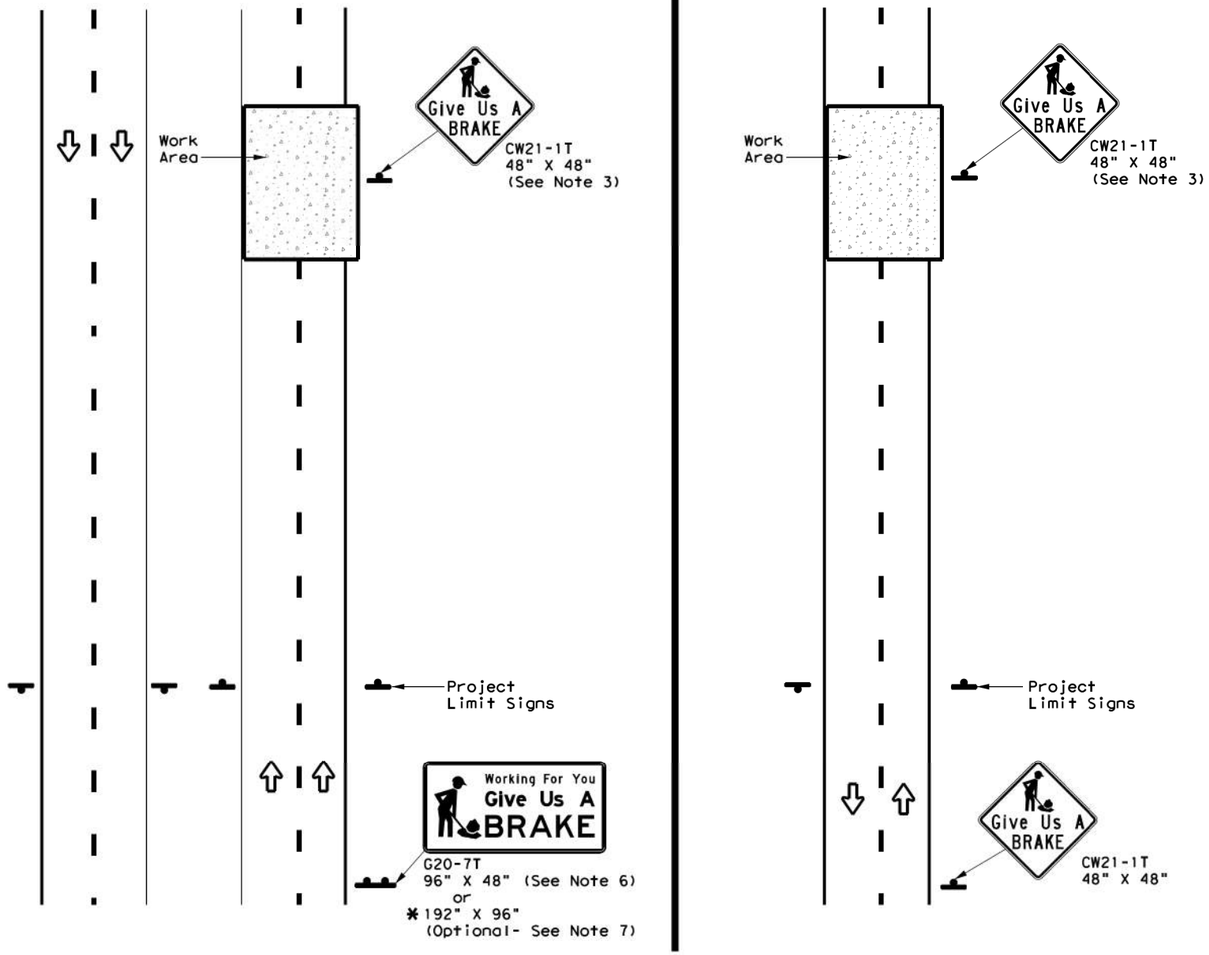

DIVIDED HIGHWAY

UNDIVIDED HIGHWAY

SIGNS ARE SHOWN FOR ONE DIRECTION OF TRAVEL

* When the optional larger WORKING FOR YOU GIVE US A BRAKE (G20-7T) 192" x 96" sign is required, the locations shall be noted elsewhere in the plans.

SUMMARY OF LARGE SIGNS

BACKGROUND COLOR	SIGN DESIGNATION	SIGN	SIGN DIMENSIONS	REFLECTIVE SHEETING	SQ FT	GALVANIZED STRUCTURAL STEEL			DRILLED SHAFT 24" DIA. (LF)
						Size	(LF) ①	(LF) ②	
Orange	G20-7T	Working For You Give Us A BRAKE	96" X 48"	Type B_{FL} or C_{FL}	32	▲	▲	▲	▲
Orange	G20-7T	Working For You Give Us A BRAKE	192" X 96"	Type B_{FL} or C_{FL}	128	W8x18	16	17	12

▲ See Note 6 Below

LEGEND	
	Sign
	Large Sign
	Traffic Flow

DEPARTMENTAL MATERIAL SPECIFICATIONS	
PLYWOOD SIGN BLANKS	DMS-7100
ALUMINUM SIGN BLANKS	DMS-7110
SIGN FACE MATERIALS	DMS-8300

COLOR	USAGE	SHEETING MATERIAL
ORANGE	BACKGROUND	TYPE B_{FL} OR TYPE C_{FL}
BLACK	LEGEND & BORDERS	NON-REFLECTIVE ACRYLIC FILM

GENERAL NOTES

1. See BC and SMD sheets for additional sign support details.
2. Sign locations shall be approved by the Engineer.
3. For projects more than two miles in length, Give Us a BRAKE signs should be repeated halfway through the project. The Give Us a Brake (CW21-1T) may be used for this purpose.
4. Work zone speed limits are sometimes used in conjunction with GIVE US A BRAKE signing. See BC(3) for location and spacing of construction speed zone signing when required.
5. Give Us a Brake (CW21-1T) signs and supports shall be considered subsidiary to Item 502, "Barricades, Signs and Traffic Handling."
6. The 96" X 48" Working For You Give Us A BRAKE (G20-7T) may use a 1/2" or 5/8" plywood substrate or 0.125" aluminum sheeting substrate and may be supported by two 4" x 6" wood posts with drilled holes for breakaway as per BC(5) and will be subsidiary to Item 502.
7. The Working For You Give Us A BRAKE (G20-7T) 192" X 96" sign shall be paid for under the following specification items:
   Item 636 - Aluminum Signs
   Item 647 - Large Roadside Sign Supports and Assemblies.
   Item 416 - Drilled Shaft Foundations
8. All signs shall be constructed in accordance with the details found in the "Standard Highway Sign Designs for Texas," latest edition. Sign details not shown in this manual shall be shown in the plans or the Engineer shall provide a detail to the Contractor before the sign is manufactured.

Texas Department of Transportation

Traffic Operations Division Standard

WORK ZONE "GIVE US A BRAKE" SIGNS

WZ(BRK)-13

FILE: wzbrk-13.dgn	DN: TxDOT	CK: TxDOT	DW: TxDOT	CK: TxDOT
©TxDOT August 1995	CONT	SECT	JOB	HIGHWAY
REVISIONS				
6-96 5-98 7-13	DIST	COUNTY		SHEET NO.
8-96 3-03				41

DATE:
FILE:

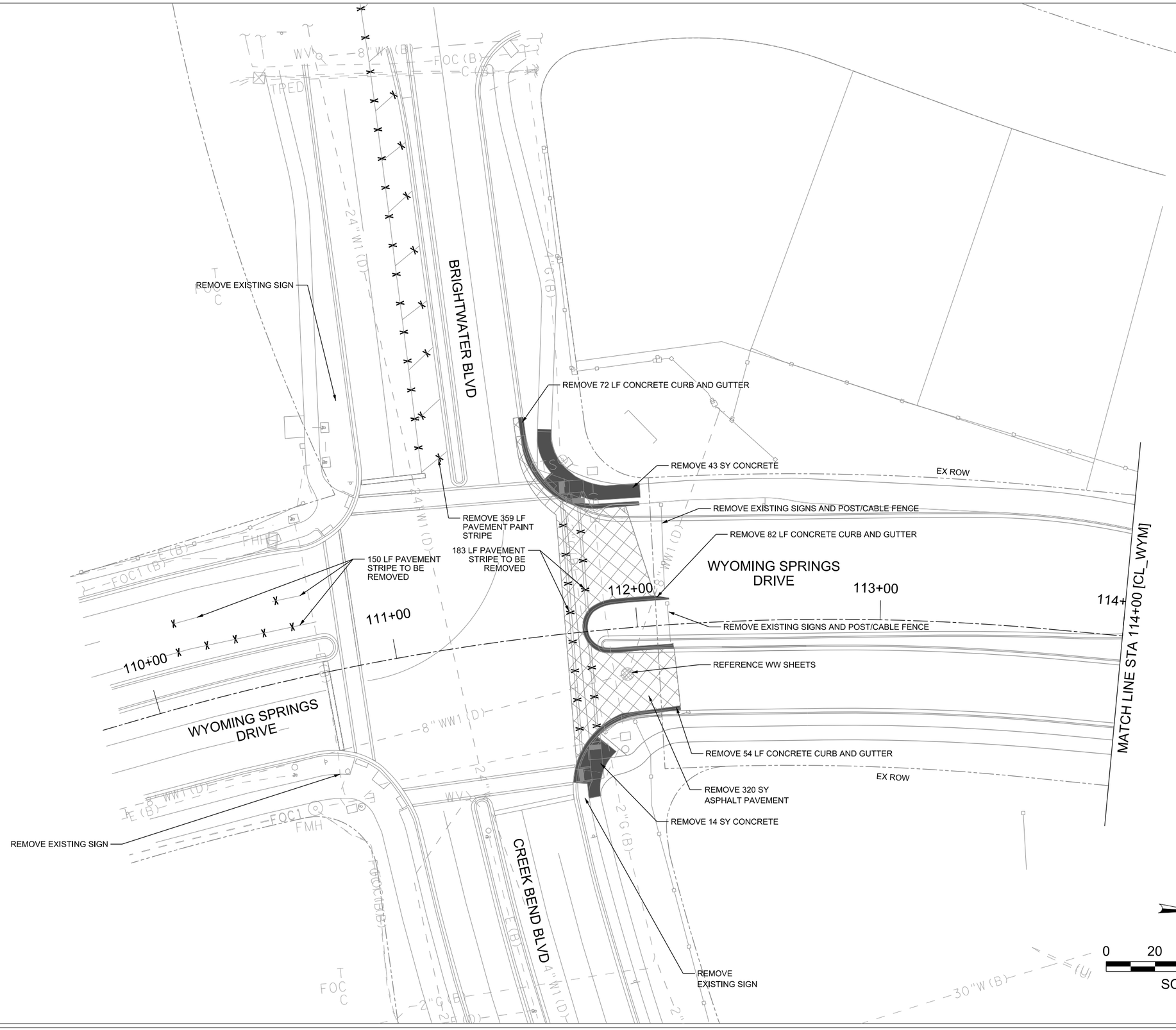

LEGEND

- DRIVEWAY REMOVAL
- ASPHALT REMOVAL
- CONCRETE REMOVAL
- SAW CUT LINE

NOTES:

1. UTILITIES SHOWN ARE APPROXIMATE AND MAY BE INCOMPLETE. CONTRACTOR IS RESPONSIBLE FOR LOCATING EXISTING UTILITIES HORIZONTALLY AND VERTICALLY PRIOR TO CONSTRUCTION
2. CONTRACTOR SHALL INSTALL TEMPORARY EROSION CONTROL MEASURES PRIOR TO COMMENCEMENT OF DEMOLITION OR CONSTRUCTION ACTIVITIES.
3. SEE TREE REMOVAL PLAN FOR MORE INFORMATION.
4. REMOVALS NOT SPECIFICALLY NOTED ON PLANS SHALL BE CONSIDERED SUBSIDIARY TO ITEM 100 PREPARING RIGHT OF WAY.
5. SEE DRIVEWAY PLANS FOR REPLACEMENT CULVERTS AND DRIVEWAY PAVING INFORMATION.
6. TREE REMOVAL SHALL BE SUBSIDIARY TO ITEM 100 PREPARING RIGHT OF WAY.
7. ABANDONED UNDERGROUND UTILITIES MAY BE ENCOUNTERED DURING EXCAVATION. THESE UTILITIES SHALL BE REMOVED AND CONSIDERED INCIDENTAL TO EXCAVATION.

WYOMING SPRINGS
SEGMENT 1
ROUND ROCK, TX

ROUND ROCK TEXAS

halff
13620 BRANTWICK DR
BLDG C, STE 100
AUSTIN, TX 78729
(512) 777-4600
TBPELS FIRM #312

Revision No.	Date	Description

F-312 4/5/23
STATE OF TEXAS
JEFFREY L. NAGY
133255
LICENSED
PROFESSIONAL ENGINEER

100% SUBMITTAL

Project No.:	36179.002
Issued:	4/28/2023
Drawn By:	HW
Checked By:	JN
Scale:	1"=40'

Sheet Title
REMOVAL PLAN
(1 OF 12)

42
Sheet Number

4/28/2023 11:39:11 AM HALFF
Xref: 0%20x%20000000361f7f002f2CA2D3\model\A361f7f.DGN?0,1,0

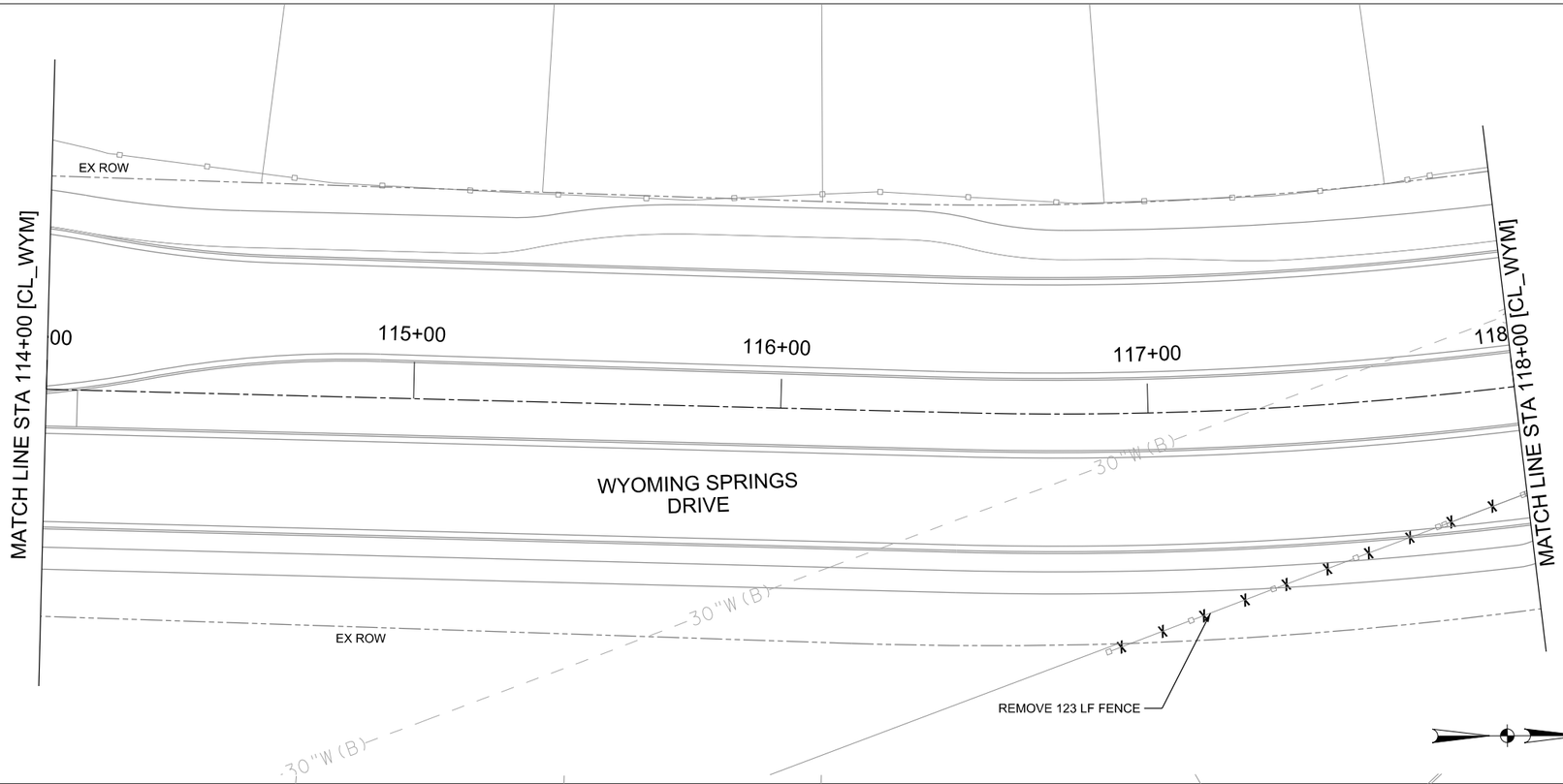

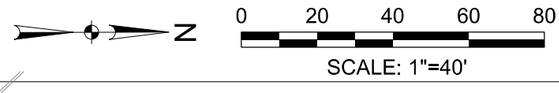

SCALE: 1"=40'

LEGEND

- DRIVEWAY REMOVAL
- ASPHALT REMOVAL
- CONCRETE REMOVAL
- SAW CUT LINE

NOTES:

1. UTILITIES SHOWN ARE APPROXIMATE AND MAY BE INCOMPLETE. CONTRACTOR IS RESPONSIBLE FOR LOCATING EXISTING UTILITIES HORIZONTALLY AND VERTICALLY PRIOR TO CONSTRUCTION
2. CONTRACTOR SHALL INSTALL TEMPORARY EROSION CONTROL MEASURES PRIOR TO COMMENCEMENT OF DEMOLITION OR CONSTRUCTION ACTIVITIES.
3. SEE TREE REMOVAL PLAN FOR MORE INFORMATION.
4. REMOVALS NOT SPECIFICALLY NOTED ON PLANS SHALL BE CONSIDERED SUBSIDIARY TO ITEM 100 PREPARING RIGHT OF WAY.
5. SEE DRIVEWAY PLANS FOR REPLACEMENT CULVERTS AND DRIVEWAY PAVING INFORMATION.
6. TREE REMOVAL SHALL BE SUBSIDIARY TO ITEM 100 PREPARING RIGHT OF WAY.
7. ABANDONED UNDERGROUND UTILITIES MAY BE ENCOUNTERED DURING EXCAVATION. tHESE UTILITIES SHALL BE REMOVED AND CONSIDERED INCIDENTAL TO EXCAVATION.

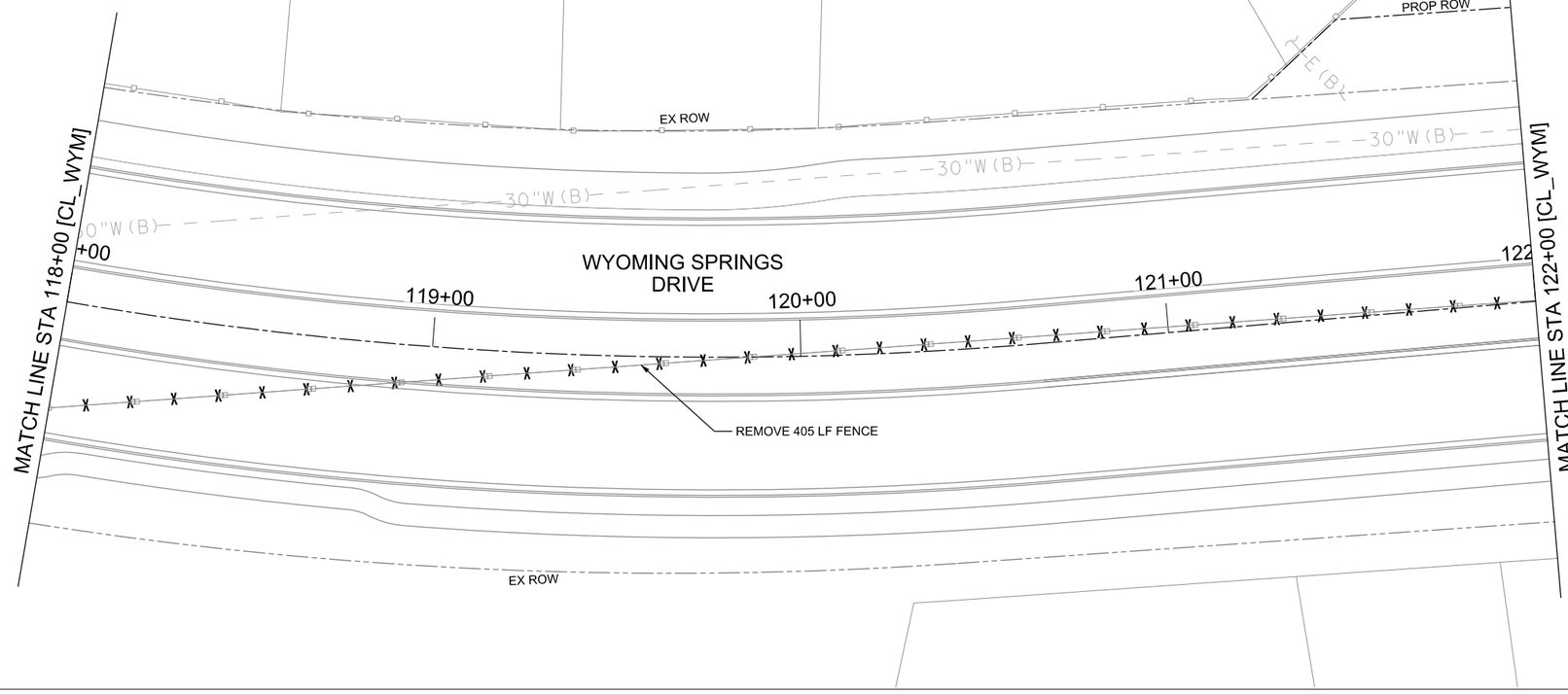



WYOMING SPRINGS
SEGMENT 1
ROUND ROCK, TX

ROUND ROCK
TEXAS

halff
13620 BRANTWICK DR
BLDG C, STE 100
AUSTIN, TX 78729
(512) 777-4600
TBPELS FIRM #312

Revision No.	Date	Description

F-312 4/5/23
STATE OF TEXAS
JEFFREY L. NAGY
133255
LICENSED
PROFESSIONAL ENGINEER

100% SUBMITTAL

Project No.:	36179.002
Issued:	4/17/2023
Drawn By:	HW
Checked By:	JN
Scale:	1"=40'

Sheet Title
REMOVAL PLAN
(2 OF 12)

43
Sheet Number

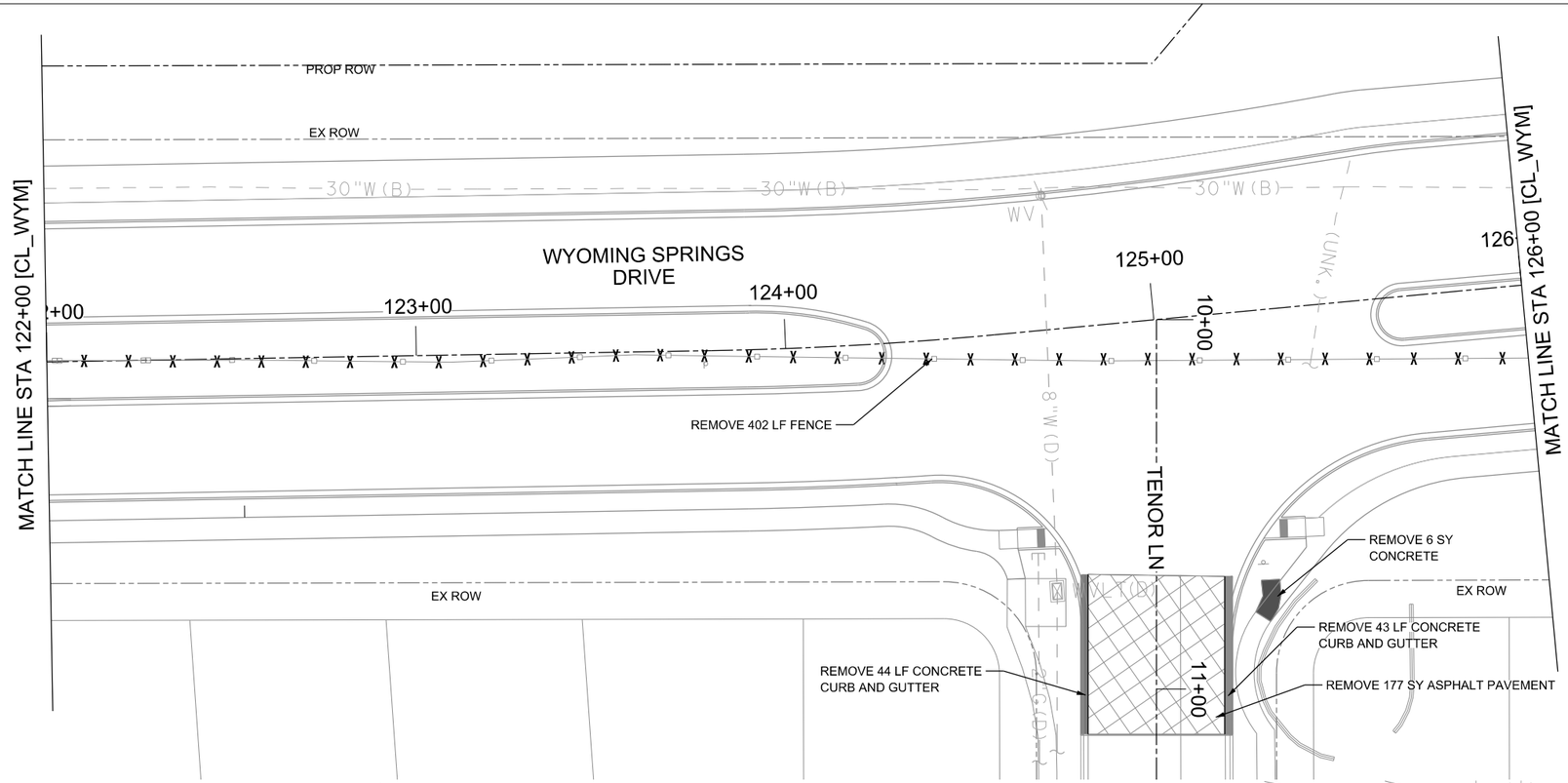

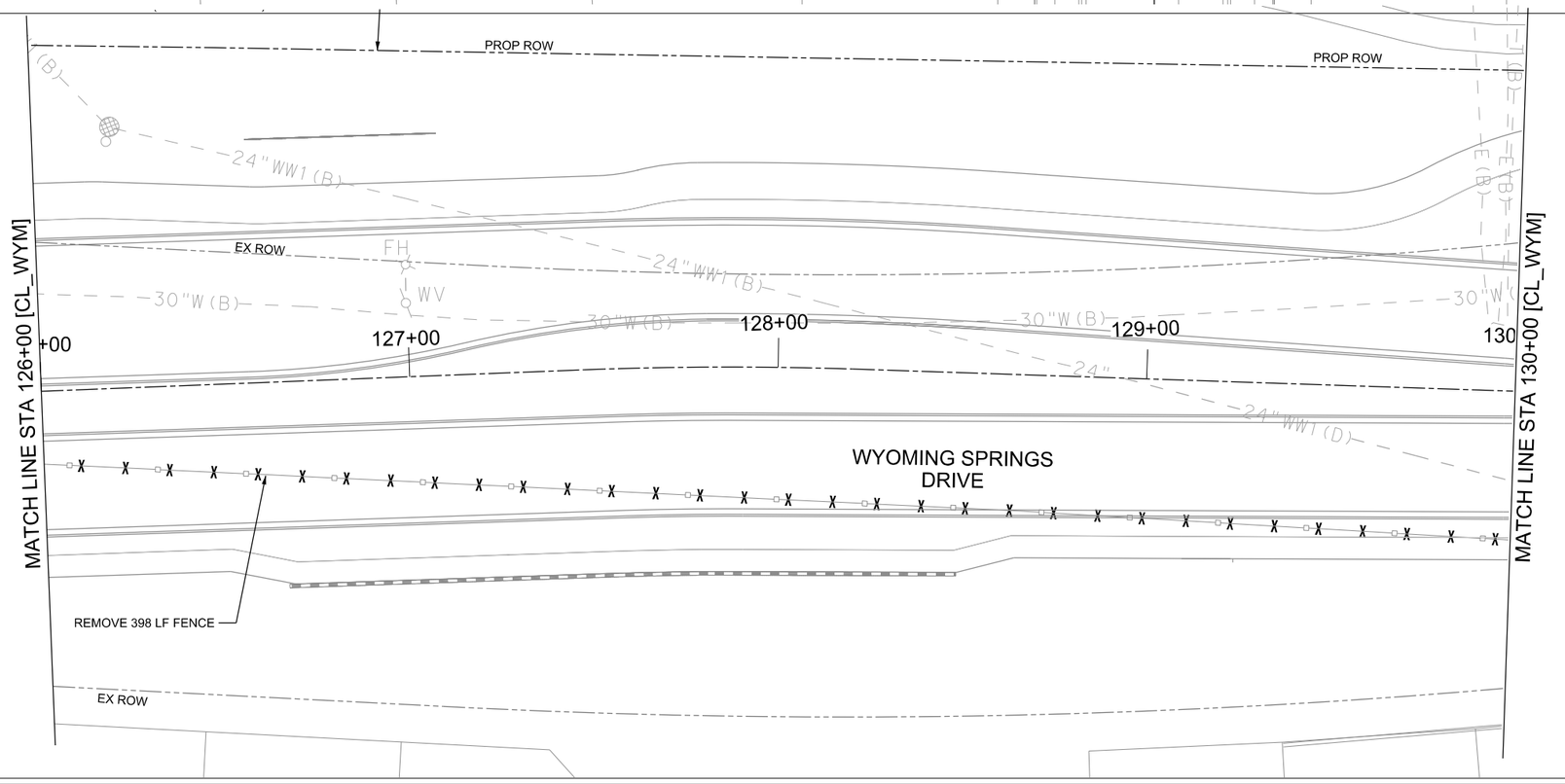

LEGEND

- DRIVEWAY REMOVAL
- ASPHALT REMOVAL
- CONCRETE REMOVAL
- SAW CUT LINE

NOTES:

1. UTILITIES SHOWN ARE APPROXIMATE AND MAY BE INCOMPLETE. CONTRACTOR IS RESPONSIBLE FOR LOCATING EXISTING UTILITIES HORIZONTALLY AND VERTICALLY PRIOR TO CONSTRUCTION
2. CONTRACTOR SHALL INSTALL TEMPORARY EROSION CONTROL MEASURES PRIOR TO COMMENCEMENT OF DEMOLITION OR CONSTRUCTION ACTIVITIES.
3. SEE TREE REMOVAL PLAN FOR MORE INFORMATION.
4. REMOVALS NOT SPECIFICALLY NOTED ON PLANS SHALL BE CONSIDERED SUBSIDIARY TO ITEM 100 PREPARING RIGHT OF WAY.
5. SEE DRIVEWAY PLANS FOR REPLACEMENT CULVERTS AND DRIVEWAY PAVING INFORMATION.
6. TREE REMOVAL SHALL BE SUBSIDIARY TO ITEM 100 PREPARING RIGHT OF WAY.
7. ABANDONED UNDERGROUND UTILITIES MAY BE ENCOUNTERED DURING EXCAVATION. THESE UTILITIES SHALL BE REMOVED AND CONSIDERED INCIDENTAL TO EXCAVATION.

N

0 20 40 60 80

SCALE: 1"=40'

WYOMING SPRINGS
SEGMENT 1
ROUND ROCK, TX

ROUND ROCK TEXAS

halff
13620 BRANTWICK DR
BLDG C, STE 100
AUSTIN, TX 78729
(512) 777-4600
TBPELS FIRM #312

Revision No.	Date	Description

F-312 4/17/23
STATE OF TEXAS
JEFFREY L. NAGY
133255
LICENSED
PROFESSIONAL ENGINEER

100% SUBMITTAL

Project No.:	36179.002
Issued:	4/17/2023
Drawn By:	HW
Checked By:	JN
Scale:	1"=40'

Sheet Title
REMOVAL PLAN (3 OF 12)

44
Sheet Number

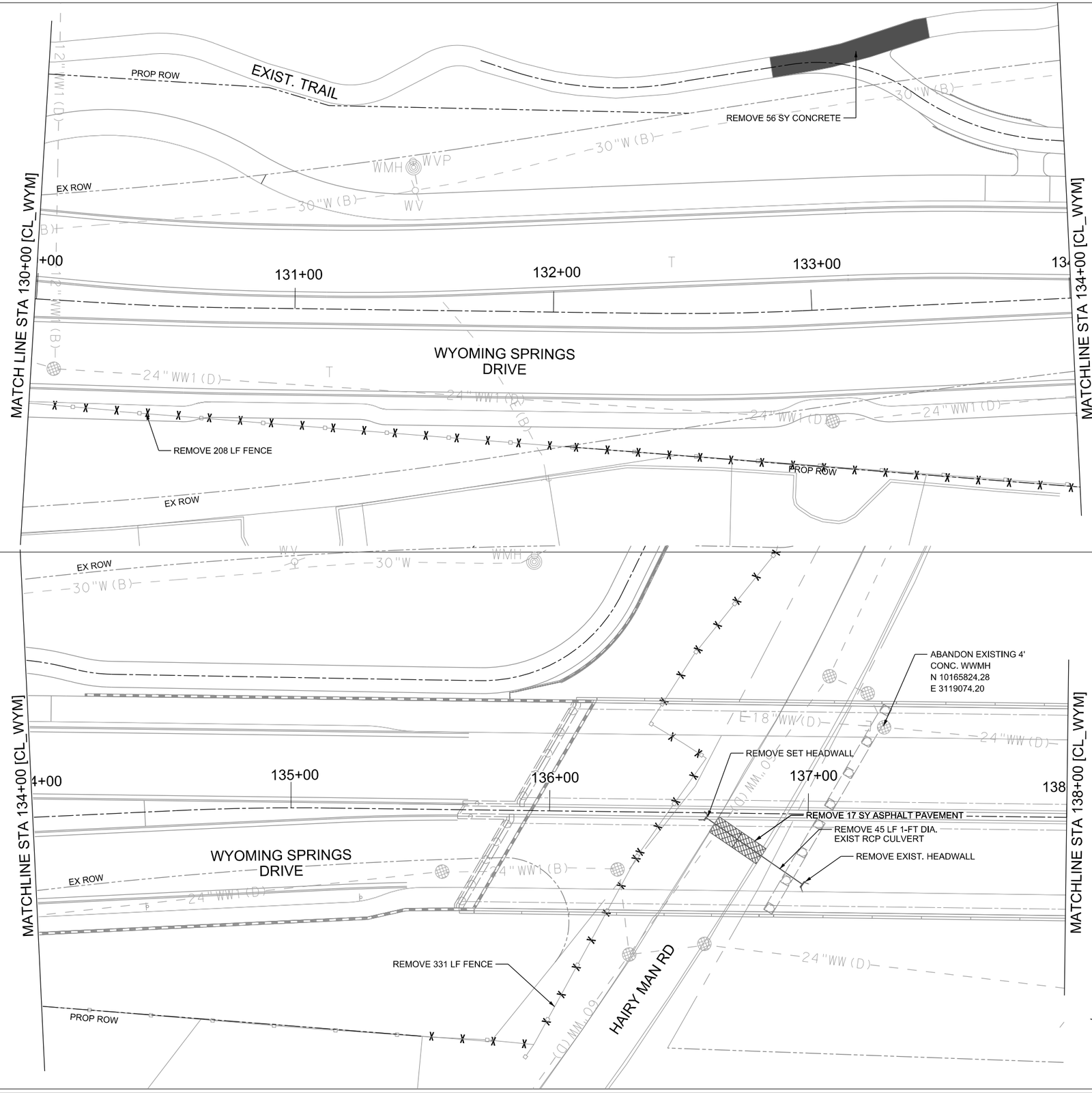

LEGEND

- DRIVEWAY REMOVAL
- ASPHALT REMOVAL
- CONCRETE REMOVAL
- SAW CUT LINE

NOTES:

1. UTILITIES SHOWN ARE APPROXIMATE AND MAY BE INCOMPLETE. CONTRACTOR IS RESPONSIBLE FOR LOCATING EXISTING UTILITIES HORIZONTALLY AND VERTICALLY PRIOR TO CONSTRUCTION
2. CONTRACTOR SHALL INSTALL TEMPORARY EROSION CONTROL MEASURES PRIOR TO COMMENCEMENT OF DEMOLITION OR CONSTRUCTION ACTIVITIES.
3. SEE TREE REMOVAL PLAN FOR MORE INFORMATION.
4. REMOVALS NOT SPECIFICALLY NOTED ON PLANS SHALL BE CONSIDERED SUBSIDIARY TO ITEM 100 PREPARING RIGHT OF WAY.
5. SEE DRIVEWAY PLANS FOR REPLACEMENT CULVERTS AND DRIVEWAY PAVING INFORMATION.
6. TREE REMOVAL SHALL BE SUBSIDIARY TO ITEM 100 PREPARING RIGHT OF WAY.
7. ABANDONED UNDERGROUND UTILITIES MAY BE ENCOUNTERED DURING EXCAVATION. tHESE UTILITIES SHALL BE REMOVED AND CONSIDERED INCIDENTAL TO EXCAVATION.

WYOMING SPRINGS
SEGMENT 1
ROUND ROCK, TX

ROUND ROCK
TEXAS

halff
13620 BRANTWICK DR
BLDG C, STE 100
AUSTIN, TX 78729
(512) 777-4800
TBPELS FIRM #312

No.	Revision Date	Description

F-312 4/5/23
STATE OF TEXAS
JEFFREY L. NAGY
133255
LICENSED
PROFESSIONAL ENGINEER

100% SUBMITTAL

Project No.:	36179.002
Issued:	4/17/2023
Drawn By:	HW
Checked By:	JN
Scale:	1"=40'

Sheet Title
REMOVAL PLAN
(4 OF 12)

45
Sheet Number

4/17/2023 10:59:08 AM HALFF afs914 \\Halff_AMV_VPN\HOU_TEN\Projects\36179.002\CAD\Sheets\ATS\36179.002_DEMO-04.dgn

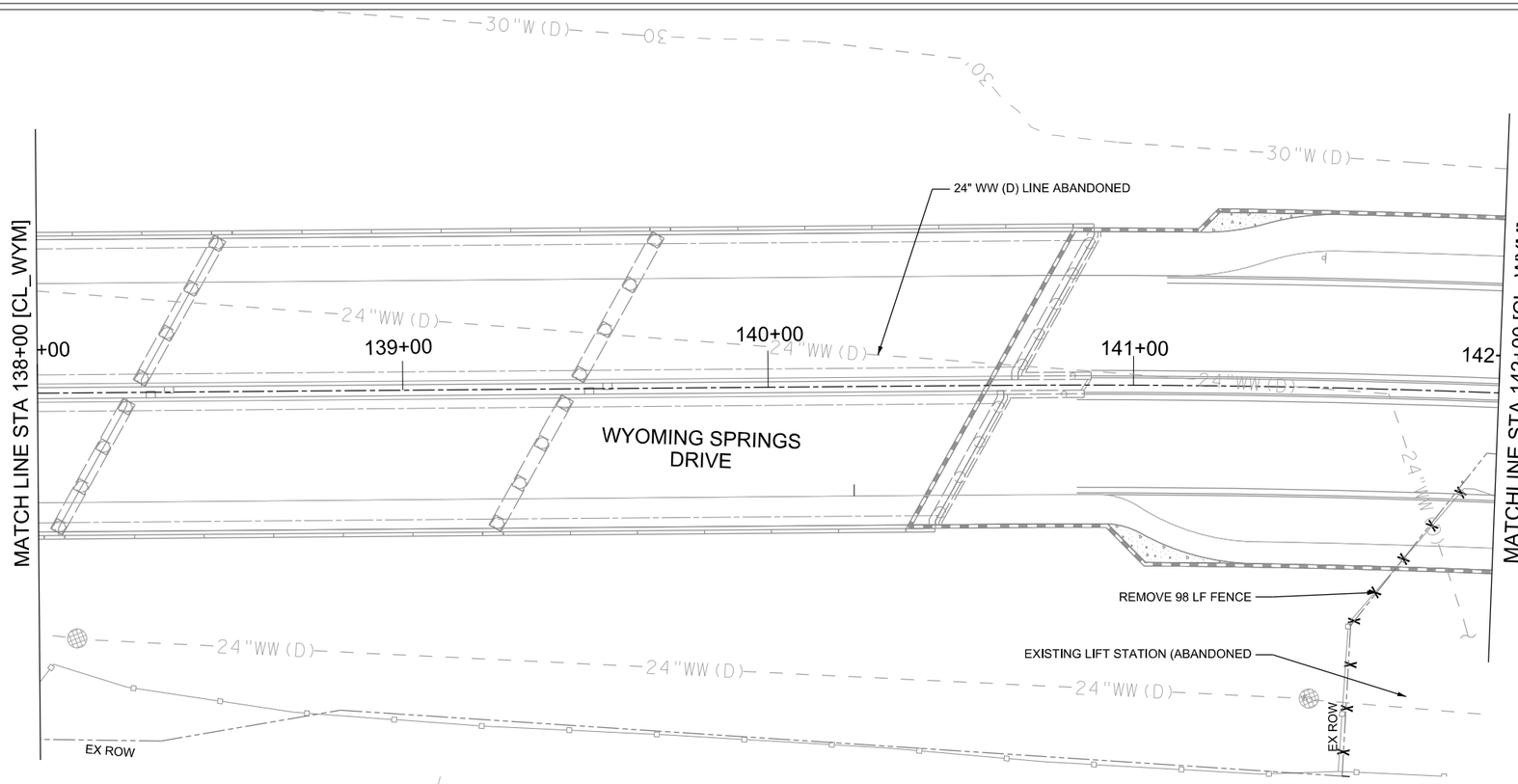

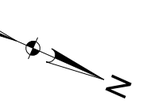

0 20 40 60 80

SCALE: 1"=40'

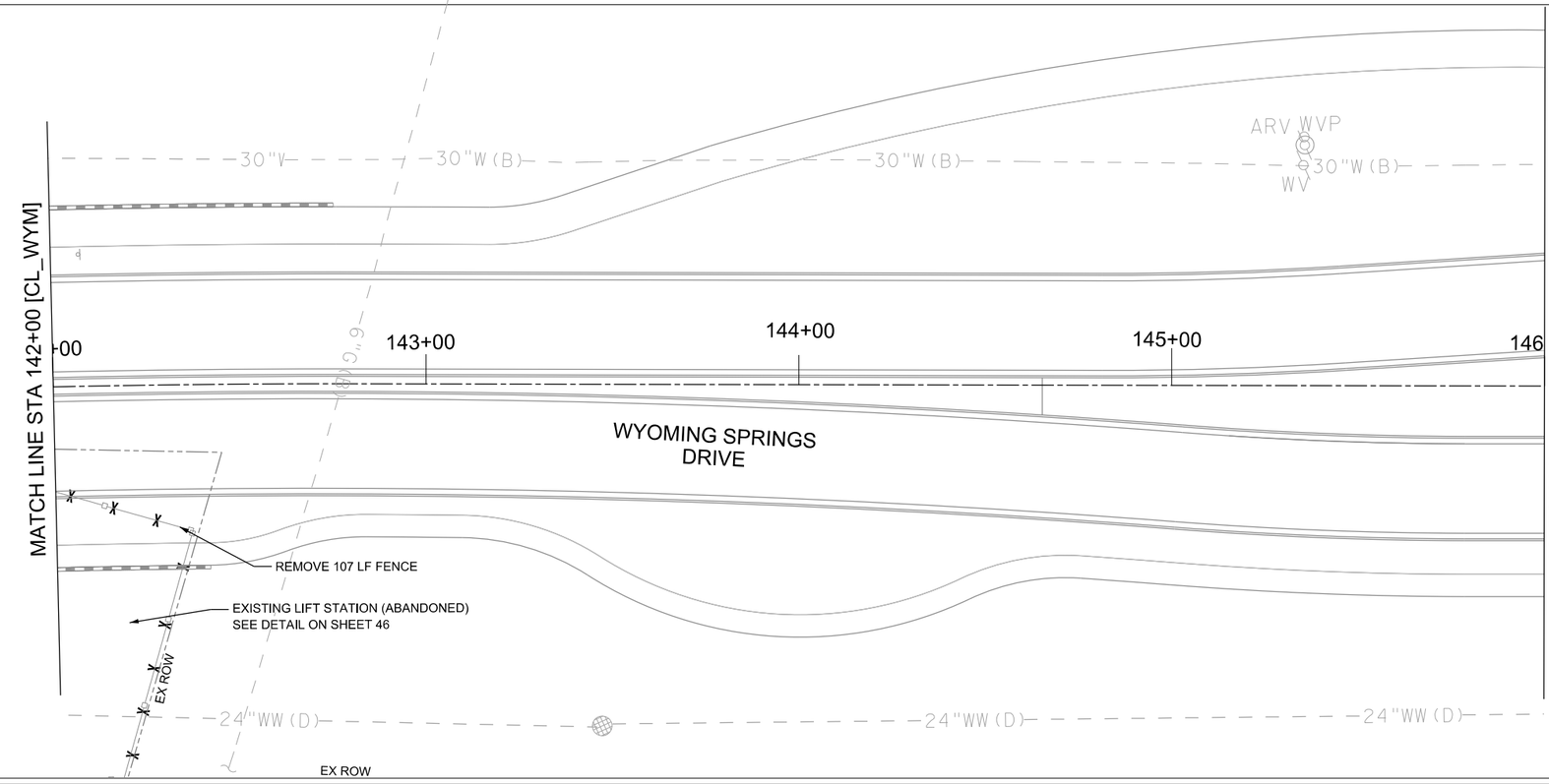



LEGEND

- DRIVEWAY REMOVAL
- ASPHALT REMOVAL
- CONCRETE REMOVAL
- SAW CUT LINE

NOTES:

1. UTILITIES SHOWN ARE APPROXIMATE AND MAY BE INCOMPLETE. CONTRACTOR IS RESPONSIBLE FOR LOCATING EXISTING UTILITIES HORIZONTALLY AND VERTICALLY PRIOR TO CONSTRUCTION
2. CONTRACTOR SHALL INSTALL TEMPORARY EROSION CONTROL MEASURES PRIOR TO COMMENCEMENT OF DEMOLITION OR CONSTRUCTION ACTIVITIES.
3. SEE TREE REMOVAL PLAN FOR MORE INFORMATION.
4. REMOVALS NOT SPECIFICALLY NOTED ON PLANS SHALL BE CONSIDERED SUBSIDIARY TO ITEM 100 PREPARING RIGHT OF WAY.
5. SEE DRIVEWAY PLANS FOR REPLACEMENT CULVERTS AND DRIVEWAY PAVING INFORMATION.
6. TREE REMOVAL SHALL BE SUBSIDIARY TO ITEM 100 PREPARING RIGHT OF WAY.
7. ABANDONED UNDERGROUND UTILITIES MAY BE ENCOUNTERED DURING EXCAVATION. tHESE UTILITIES SHALL BE REMOVED AND CONSIDERED INCIDENTAL TO EXCAVATION.

WYOMING SPRINGS
SEGMENT 1
ROUND ROCK, TX

ROUND ROCK TEXAS

halff
13620 BRANTWICK DR
BLDG C, STE 100
AUSTIN, TX 78729
(512) 777-4600
TBPELS FIRM #312

Revision No.	Date	Description
.	.	.
.	.	.
.	.	.
.	.	.
.	.	.
.	.	.
.	.	.

F-312 4/17/23
STATE OF TEXAS
JEFFREY L. NAGY
133255
LICENSED
PROFESSIONAL ENGINEER

100% SUBMITTAL

Project No.:	36179.002
Issued:	4/17/2023
Drawn By:	HW
Checked By:	JN
Scale:	1"=40'

Sheet Title
REMOVAL PLAN
(5 OF 12)

46
Sheet Number

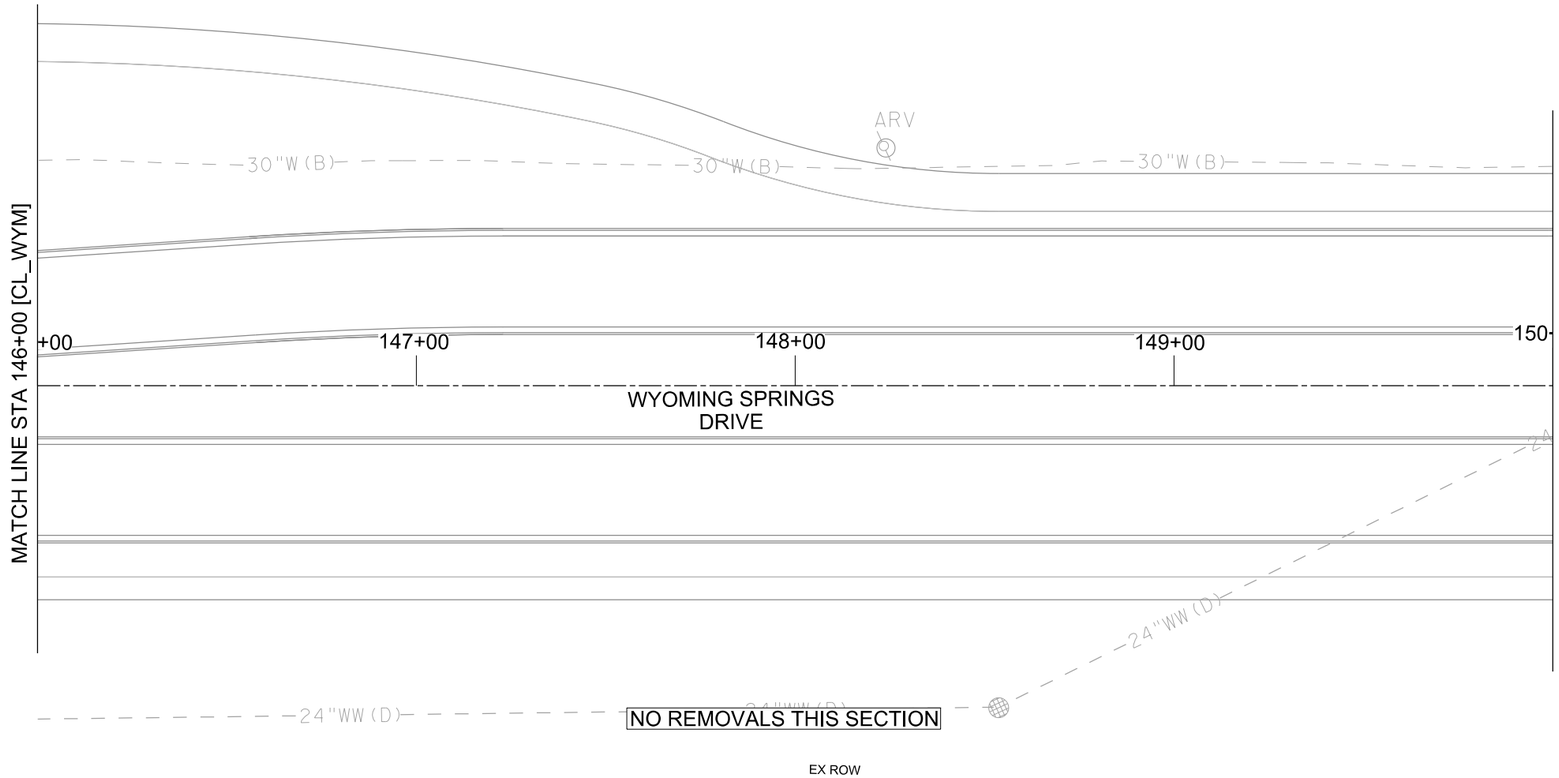

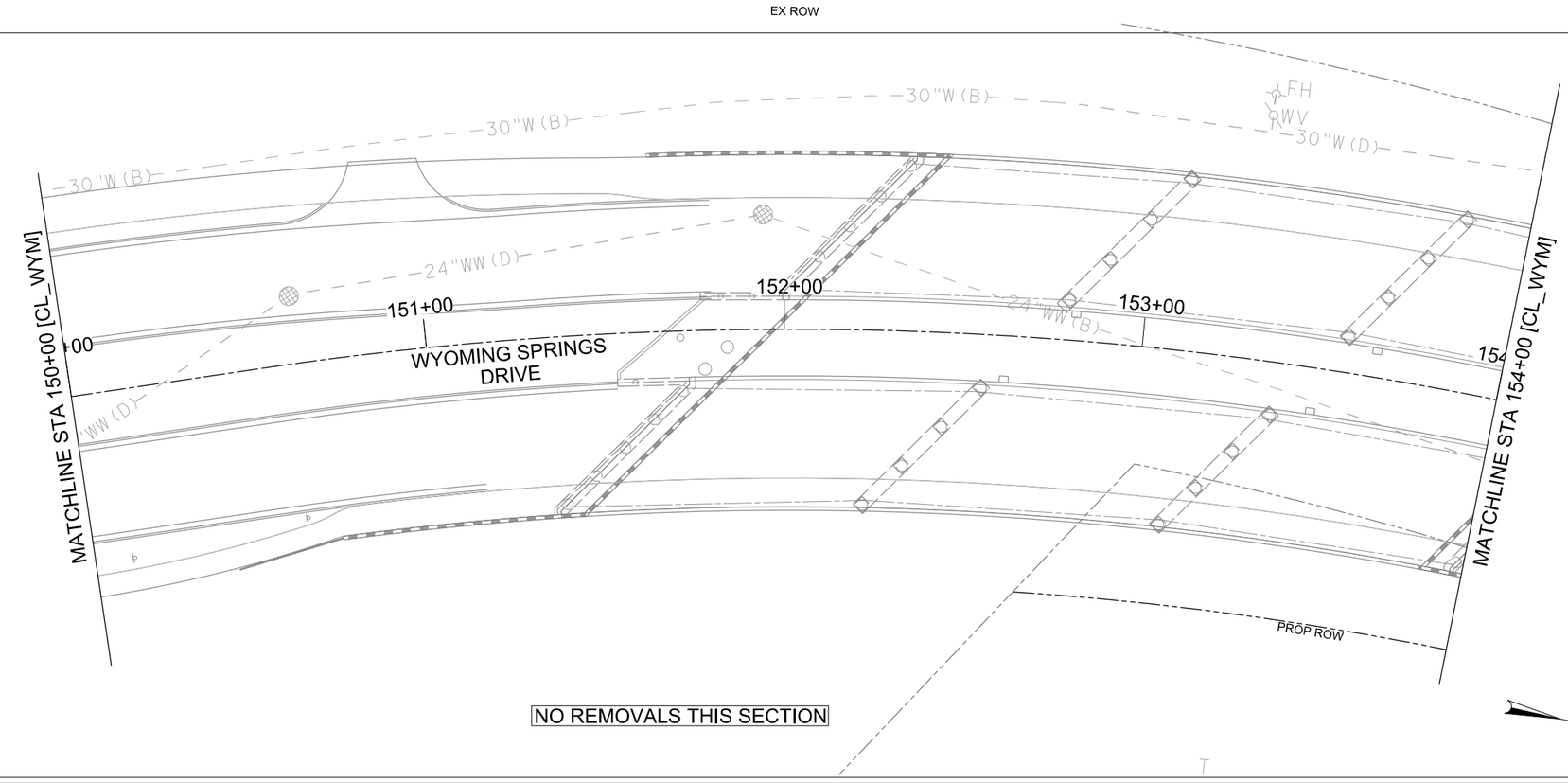

LEGEND

- DRIVEWAY REMOVAL
- ASPHALT REMOVAL
- CONCRETE REMOVAL
- SAW CUT LINE

NOTES:

1. UTILITIES SHOWN ARE APPROXIMATE AND MAY BE INCOMPLETE. CONTRACTOR IS RESPONSIBLE FOR LOCATING EXISTING UTILITIES HORIZONTALLY AND VERTICALLY PRIOR TO CONSTRUCTION
2. CONTRACTOR SHALL INSTALL TEMPORARY EROSION CONTROL MEASURES PRIOR TO COMMENCEMENT OF DEMOLITION OR CONSTRUCTION ACTIVITIES.
3. SEE TREE REMOVAL PLAN FOR MORE INFORMATION.
4. REMOVALS NOT SPECIFICALLY NOTED ON PLANS SHALL BE CONSIDERED SUBSIDIARY TO ITEM 100 PREPARING RIGHT OF WAY.
5. SEE DRIVEWAY PLANS FOR REPLACEMENT CULVERTS AND DRIVEWAY PAVING INFORMATION.
6. TREE REMOVAL SHALL BE SUBSIDIARY TO ITEM 100 PREPARING RIGHT OF WAY.
7. ABANDONED UNDERGROUND UTILITIES MAY BE ENCOUNTERED DURING EXCAVATION. tHESE UTILITIES SHALL BE REMOVED AND CONSIDERED INCIDENTAL TO EXCAVATION.

N

0 20 40 60 80

SCALE: 1"=40'

WYOMING SPRINGS
SEGMENT 1
ROUND ROCK, TX

ROUND ROCK TEXAS

halff
13620 BRANTWICK DR
BLDG C, STE 100
AUSTIN, TX 78729
(512) 777-4600
TBPELS FIRM #312

Revision No.	Date	Description

STATE OF TEXAS
JEFFREY L NAGY
133255
LICENSED
PROFESSIONAL ENGINEER
4/5/23

100% SUBMITTAL

Project No.:	36179.002
Issued:	4/17/2023
Drawn By:	HW
Checked By:	JN
Scale:	1"=40'

Sheet Title
REMOVAL PLAN
(6 OF 12)

47
Sheet Number

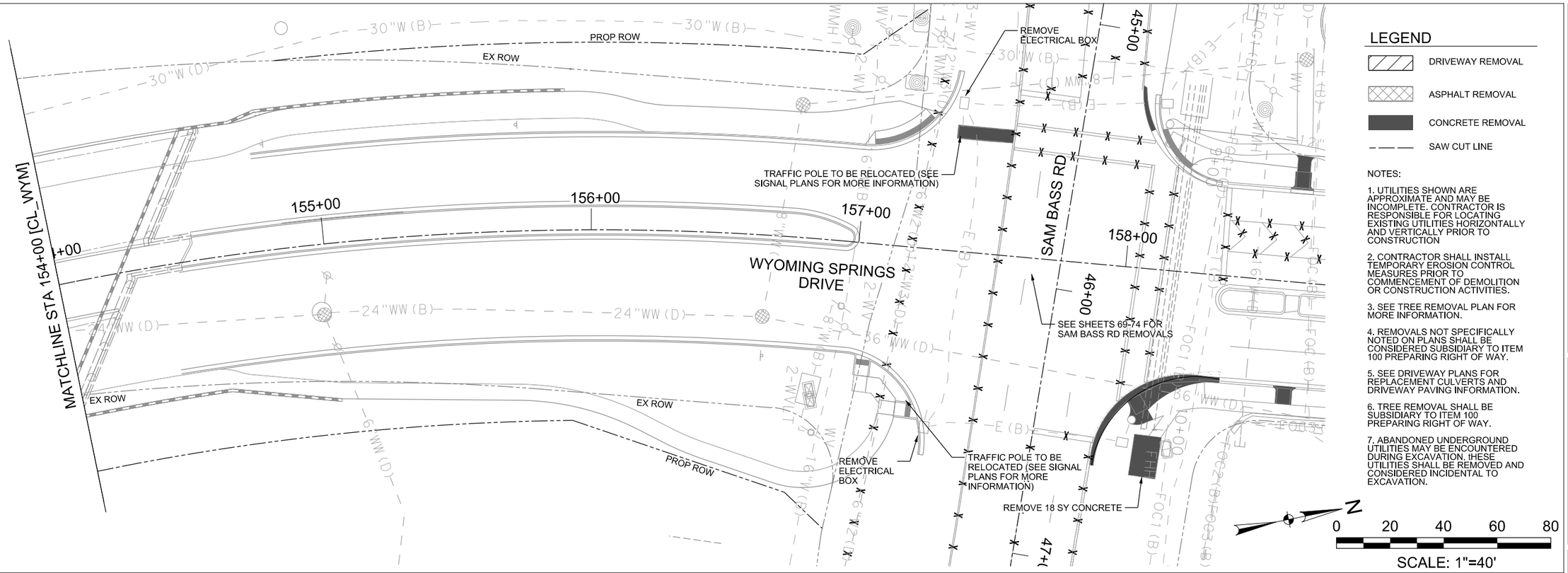

EXISTING LIFT STATION INSET

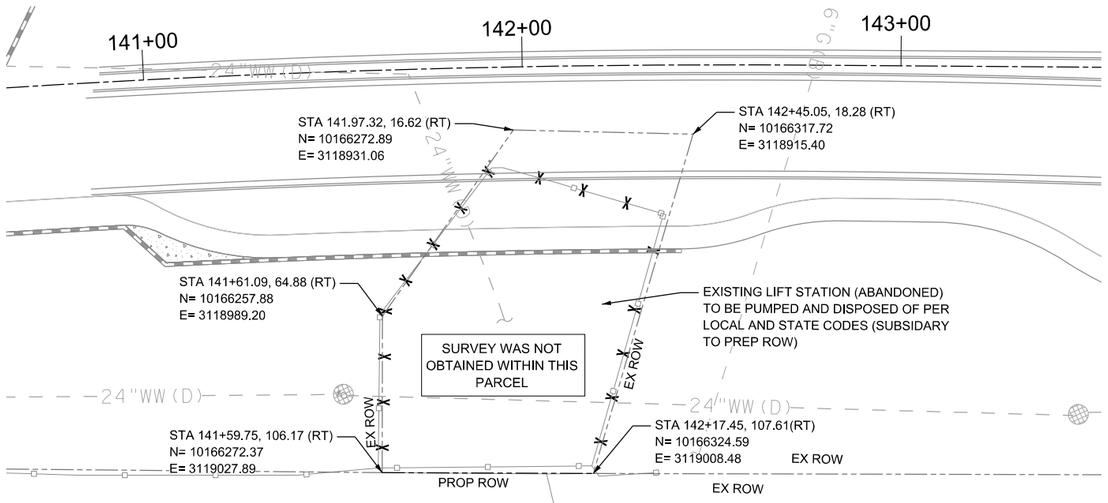

NOTES:

1. REMOVE/DEMO ALL LIFTSTAION WALLS AND STRUCTURES 3 FEET BELOW GRADE, FILL WITH COMPACTED EXCAVATED MATERIAL OR GRAVEL, AND CAP WITH 6 INCHES OF CONCRETE OR FLOWABLE FILL. FILL IN 2 FEET (min.) WITH EXCAVATED MATERIAL AND THEN 4 INCHES OF TOP SOIL AND HYDROMUCH OR SOD.

WYOMING SPRINGS
SEGMENT 1
ROUND ROCK, TX

ROUND ROCK TEXAS

halff
13620 BRANTWICK DR
BLDG C, STE 100
AUSTIN, TX 78729
(512) 777-4600
TBPELS FIRM #312

Revision No.	Date	Description
.	.	.
.	.	.
.	.	.
.	.	.
.	.	.
.	.	.
.	.	.

F-312 4/5/23
STATE OF TEXAS
JEFFREY L NAGY
133255
LICENSED PROFESSIONAL ENGINEER

100% SUBMITTAL

Project No.:	36179.002
Issued:	4/17/2023
Drawn By:	HW
Checked By:	JN
Scale:	1"=40'

Sheet Title
REMOVAL PLAN
(7 OF 12)

48
Sheet Number

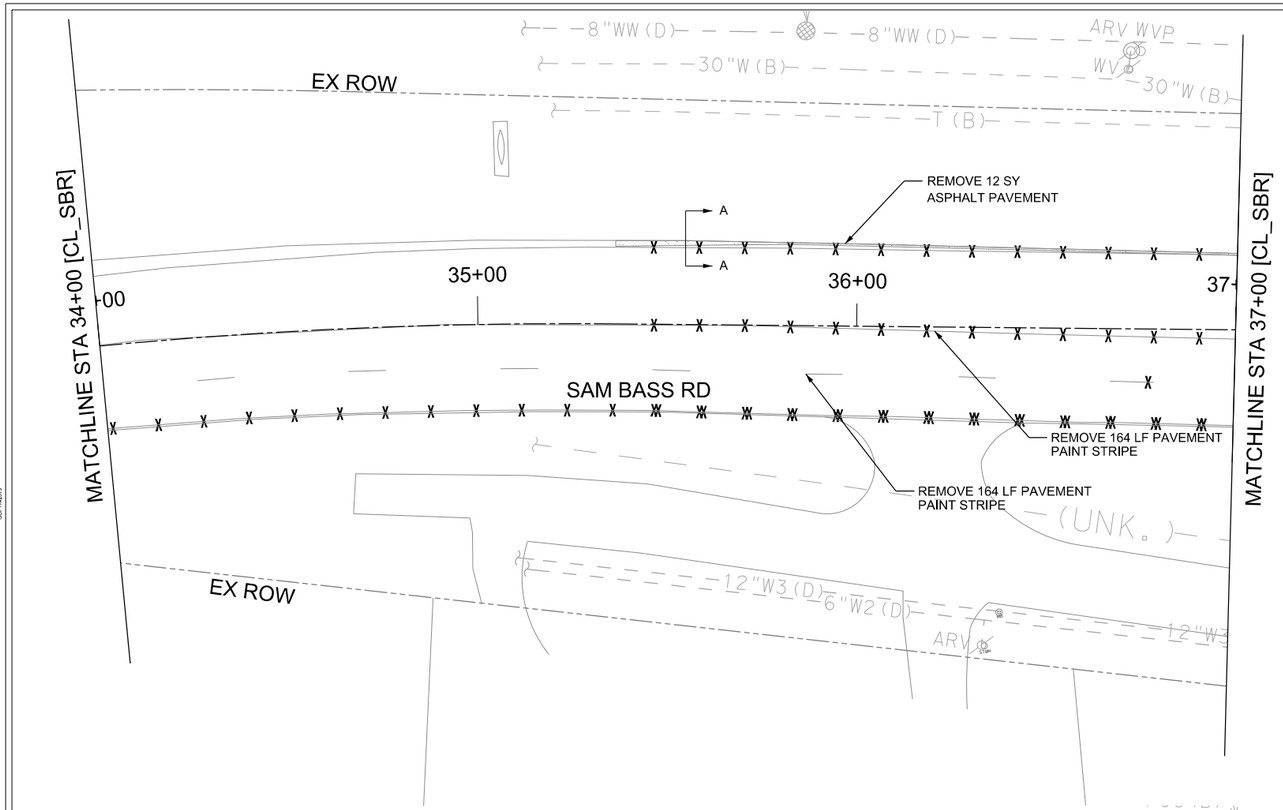

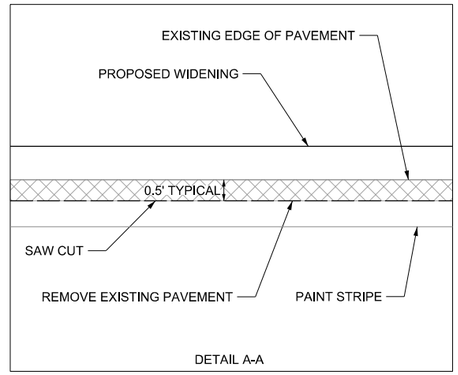

LEGEND

- DRIVEWAY REMOVAL
- ASPHALT REMOVAL
- CONCRETE REMOVAL
- SAW CUT LINE

NOTES:

1. UTILITIES SHOWN ARE APPROXIMATE AND MAY BE INCOMPLETE. CONTRACTOR IS RESPONSIBLE FOR LOCATING EXISTING UTILITIES HORIZONTALLY AND VERTICALLY PRIOR TO CONSTRUCTION
2. CONTRACTOR SHALL INSTALL TEMPORARY EROSION CONTROL MEASURES PRIOR TO COMMENCEMENT OF DEMOLITION OR CONSTRUCTION ACTIVITIES.
3. SEE TREE REMOVAL PLAN FOR MORE INFORMATION.
4. REMOVALS NOT SPECIFICALLY NOTED ON PLANS SHALL BE CONSIDERED SUBSIDIARY TO ITEM 100 PREPARING RIGHT OF WAY.
5. SEE DRIVEWAY PLANS FOR REPLACEMENT CULVERTS AND DRIVEWAY PAVING INFORMATION.
6. TREE REMOVAL SHALL BE SUBSIDIARY TO ITEM 100 PREPARING RIGHT OF WAY.
7. ABANDONED UNDERGROUND UTILITIES MAY BE ENCOUNTERED DURING EXCAVATION. tHESE UTILITIES SHALL BE REMOVED AND CONSIDERED INCIDENTAL TO EXCAVATION.

N

0 20 40 60 80

SCALE: 1"=40'

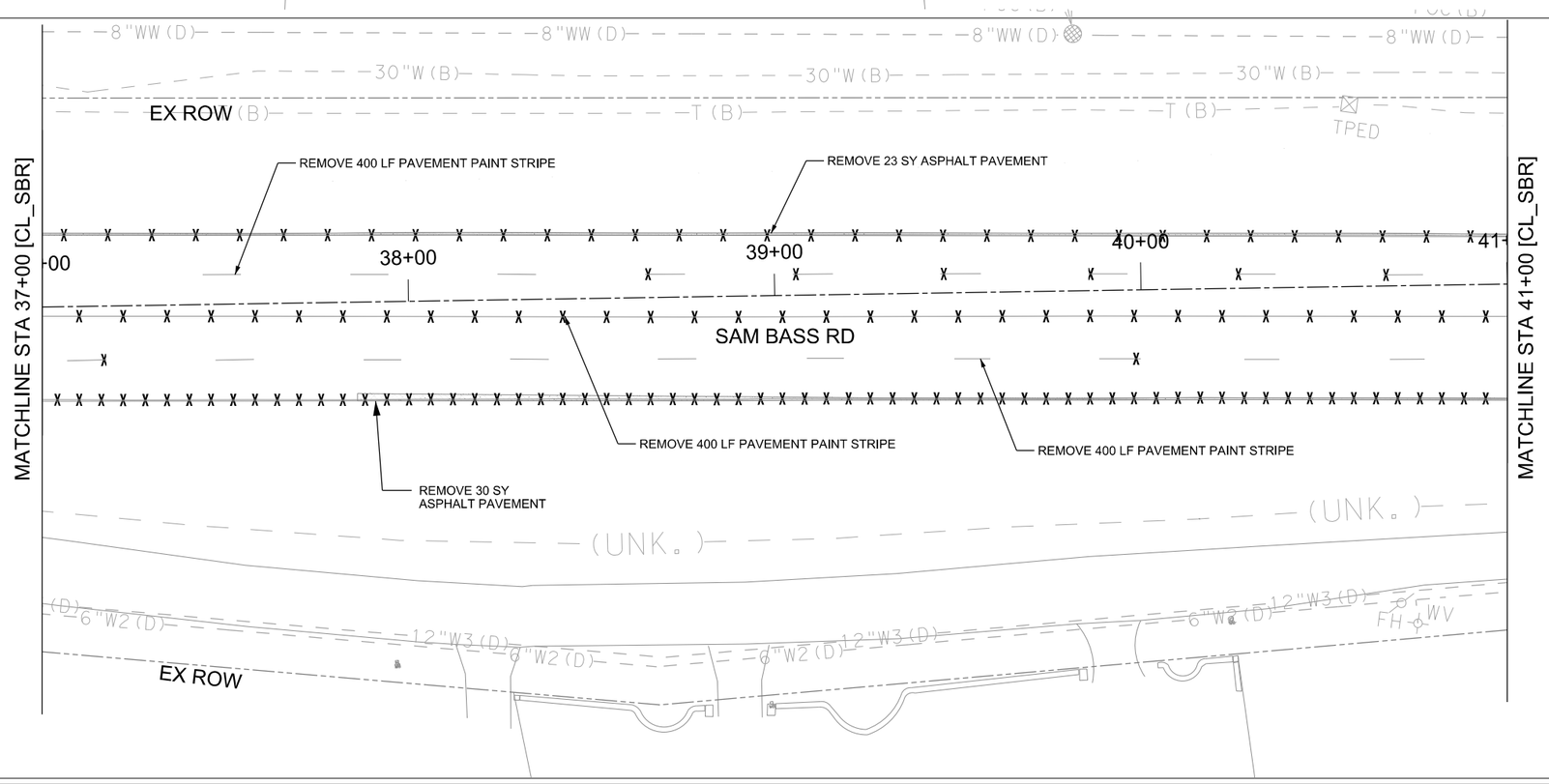

N

WYOMING SPRINGS
SEGMENT 1
ROUND ROCK, TX

ROUND ROCK TEXAS

halff
13620 BRANTWICK DR
BLDG C, STE 100
AUSTIN, TX 78729
(512) 777-4600
TBPELS FIRM #312

Revision No.	Date	Description

4/5/23

JEFFREY L NAGY
133255
LICENSED
PROFESSIONAL ENGINEER

100% SUBMITTAL

Project No.:	36179.002
Issued:	4/17/2023
Drawn By:	HW
Checked By:	JN
Scale:	1"=40'

Sheet Title
REMOVAL PLAN
(8 OF 12)

49
Sheet Number

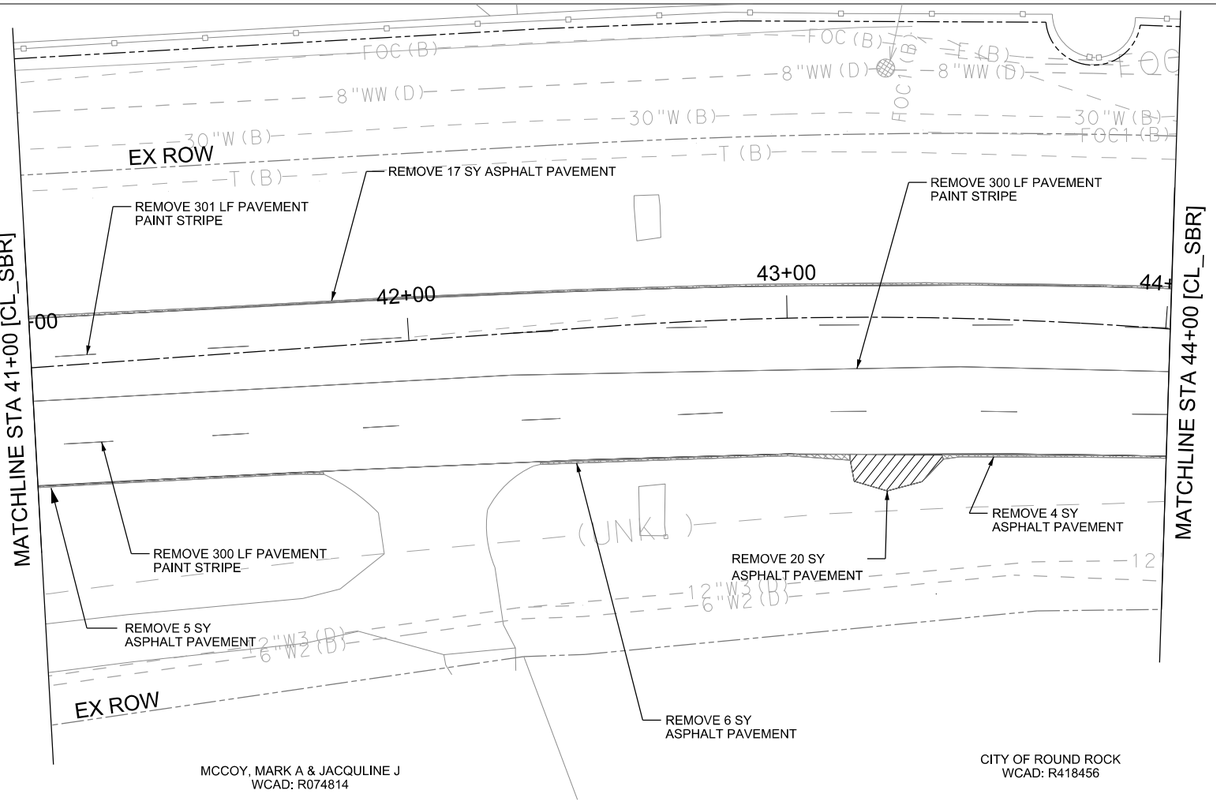

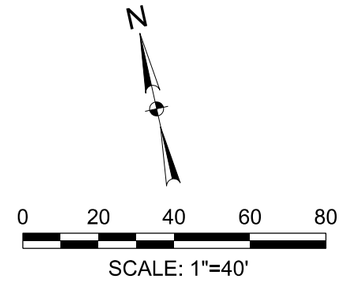

LEGEND

- DRIVEWAY REMOVAL
- ASPHALT REMOVAL
- CONCRETE REMOVAL
- SAW CUT LINE

NOTES:

1. UTILITIES SHOWN ARE APPROXIMATE AND MAY BE INCOMPLETE. CONTRACTOR IS RESPONSIBLE FOR LOCATING EXISTING UTILITIES HORIZONTALLY AND VERTICALLY PRIOR TO CONSTRUCTION

2. CONTRACTOR SHALL INSTALL TEMPORARY EROSION CONTROL MEASURES PRIOR TO COMMENCEMENT OF DEMOLITION OR CONSTRUCTION ACTIVITIES.

3. SEE TREE REMOVAL PLAN FOR MORE INFORMATION.

4. REMOVALS NOT SPECIFICALLY NOTED ON PLANS SHALL BE CONSIDERED SUBSIDIARY TO ITEM 100 PREPARING RIGHT OF WAY.

5. SEE DRIVEWAY PLANS FOR REPLACEMENT CULVERTS AND DRIVEWAY PAVING INFORMATION.

6. TREE REMOVAL SHALL BE SUBSIDIARY TO ITEM 100 PREPARING RIGHT OF WAY.

7. ABANDONED UNDERGROUND UTILITIES MAY BE ENCOUNTERED DURING EXCAVATION. THESE UTILITIES SHALL BE REMOVED AND CONSIDERED INCIDENTAL TO EXCAVATION.

8. CONTRACTOR TO COORDINATE DRIVEWAY CLOSURE WITH FIRE DEPARTMENT. AT NO POINT SHALL BOTH DRIVEWAYS BE INOPERABLE

WYOMING SPRINGS
SEGMENT 1
ROUND ROCK, TX

ROUND ROCK TEXAS

halff
13620 BRANTWICK DR
BLDG C, STE 100
AUSTIN, TX 78729
(512) 777-4600
TBPELS FIRM #312

Revision No.	Date	Description
.	.	.
.	.	.
.	.	.
.	.	.
.	.	.
.	.	.
.	.	.
.	.	.

F-312 4/5/23
STATE OF TEXAS
JEFFREY L. NAGY
133255
LICENSED
PROFESSIONAL ENGINEER

100% SUBMITTAL

Project No.:	36179.002
Issued:	4/17/2023
Drawn By:	HW
Checked By:	JN
Scale:	1"=40'

Sheet Title
REMOVAL PLAN
(9 OF 12)

50
Sheet Number

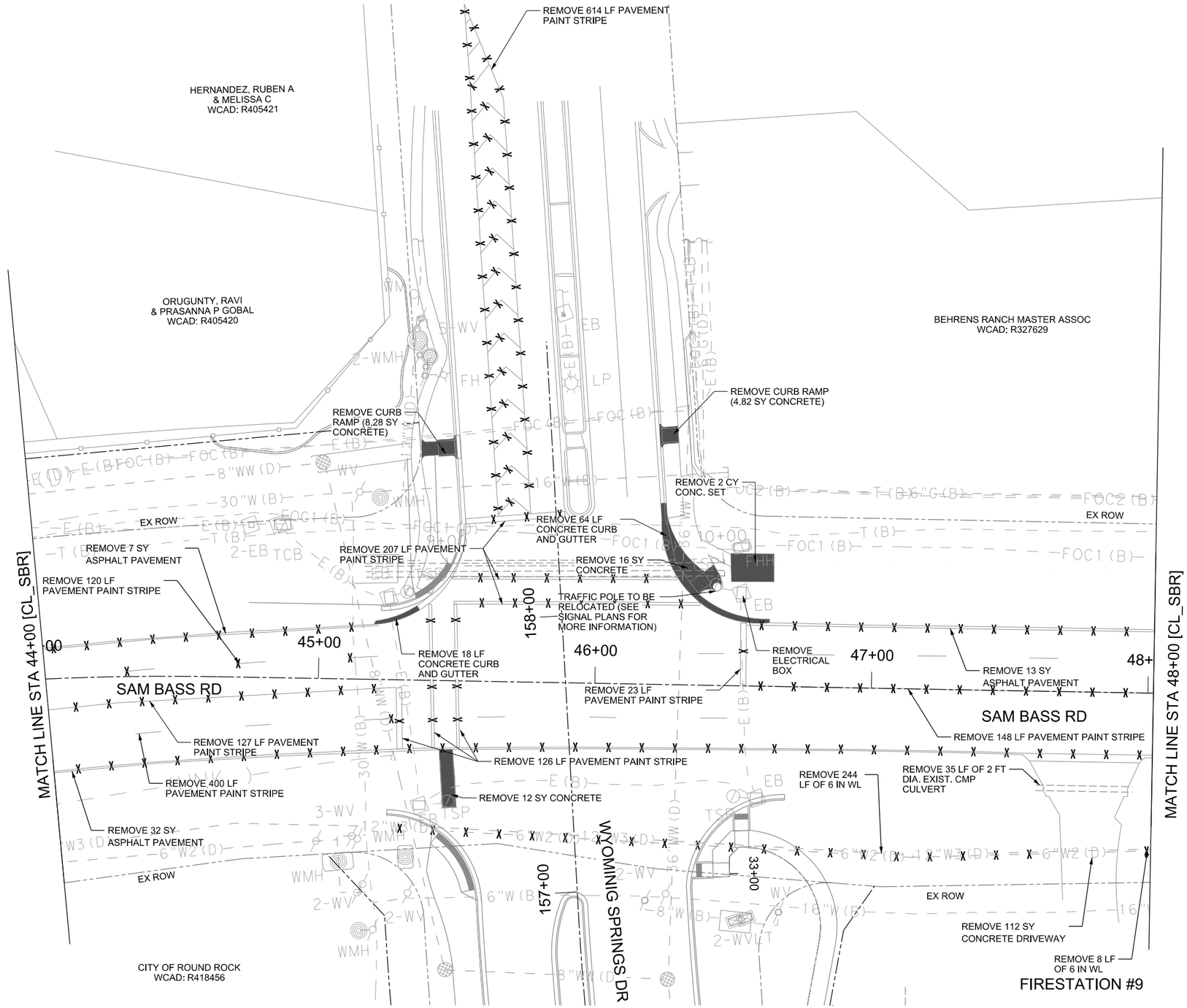

0 20 40 60 80

SCALE: 1"=40'

LEGEND

- DRIVEWAY REMOVAL
- ASPHALT REMOVAL
- CONCRETE REMOVAL
- SAW CUT LINE

NOTES:

1. UTILITIES SHOWN ARE APPROXIMATE AND MAY BE INCOMPLETE. CONTRACTOR IS RESPONSIBLE FOR LOCATING EXISTING UTILITIES HORIZONTALLY AND VERTICALLY PRIOR TO CONSTRUCTION
2. CONTRACTOR SHALL INSTALL TEMPORARY EROSION CONTROL MEASURES PRIOR TO COMMENCEMENT OF DEMOLITION OR CONSTRUCTION ACTIVITIES.
3. SEE TREE REMOVAL PLAN FOR MORE INFORMATION.
4. REMOVALS NOT SPECIFICALLY NOTED ON PLANS SHALL BE CONSIDERED SUBSIDIARY TO ITEM 100 PREPARING RIGHT OF WAY.
5. SEE DRIVEWAY PLANS FOR REPLACEMENT CULVERTS AND DRIVEWAY PAVING INFORMATION.
6. TREE REMOVAL SHALL BE SUBSIDIARY TO ITEM 100 PREPARING RIGHT OF WAY.
7. ABANDONED UNDERGROUND UTILITIES MAY BE ENCOUNTERED DURING EXCAVATION. THESE UTILITIES SHALL BE REMOVED AND CONSIDERED INCIDENTAL TO EXCAVATION.

WYOMING SPRINGS
SEGMENT 1
ROUND ROCK, TX

ROUND ROCK TEXAS

halff
13620 BRANTWICK DR
BLDG C, STE 100
AUSTIN, TX 78729
(512) 777-4600
TBPELS FIRM #312

Revision No.	Date	Description

F-312 4/5/23
STATE OF TEXAS
JEFFREY L. NAGY
133255
LICENSED PROFESSIONAL ENGINEER

100% SUBMITTAL

Project No.:	36179.002
Issued:	4/17/2023
Drawn By:	HW
Checked By:	JN
Scale:	1"=40'

Sheet Title
REMOVAL PLAN
(10 OF 12)

51
Sheet Number

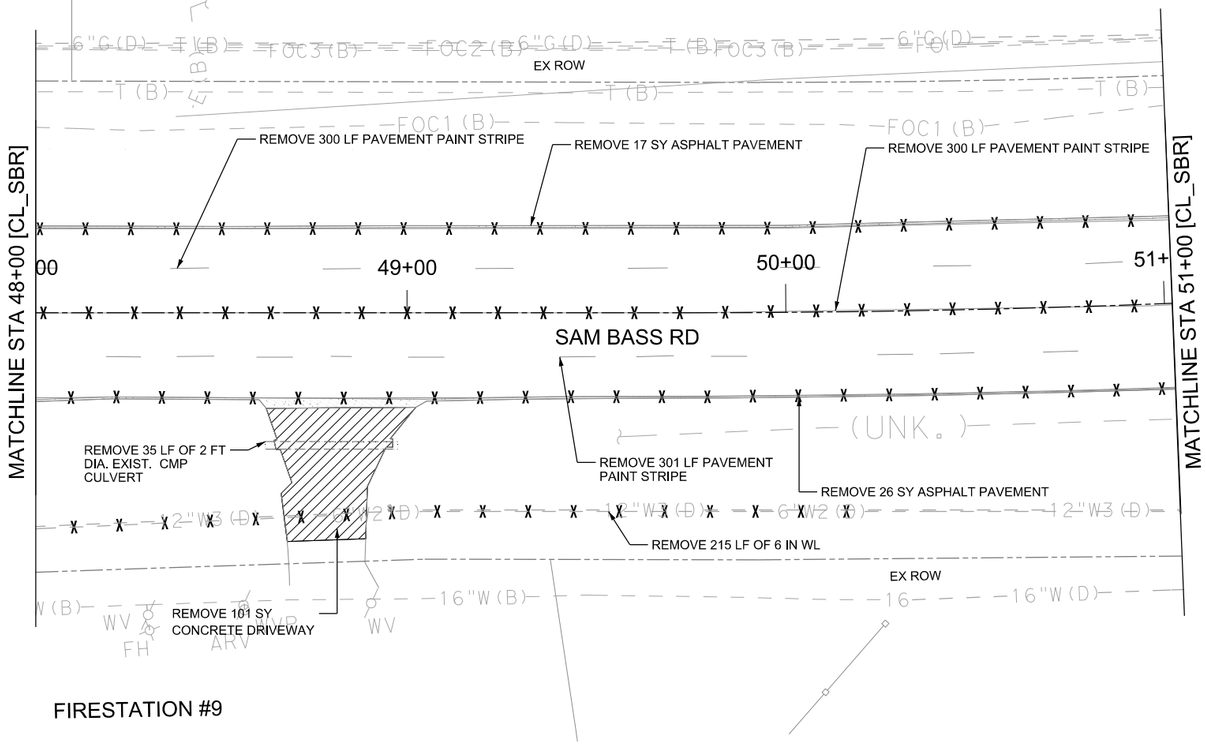

FIRESTATION #9

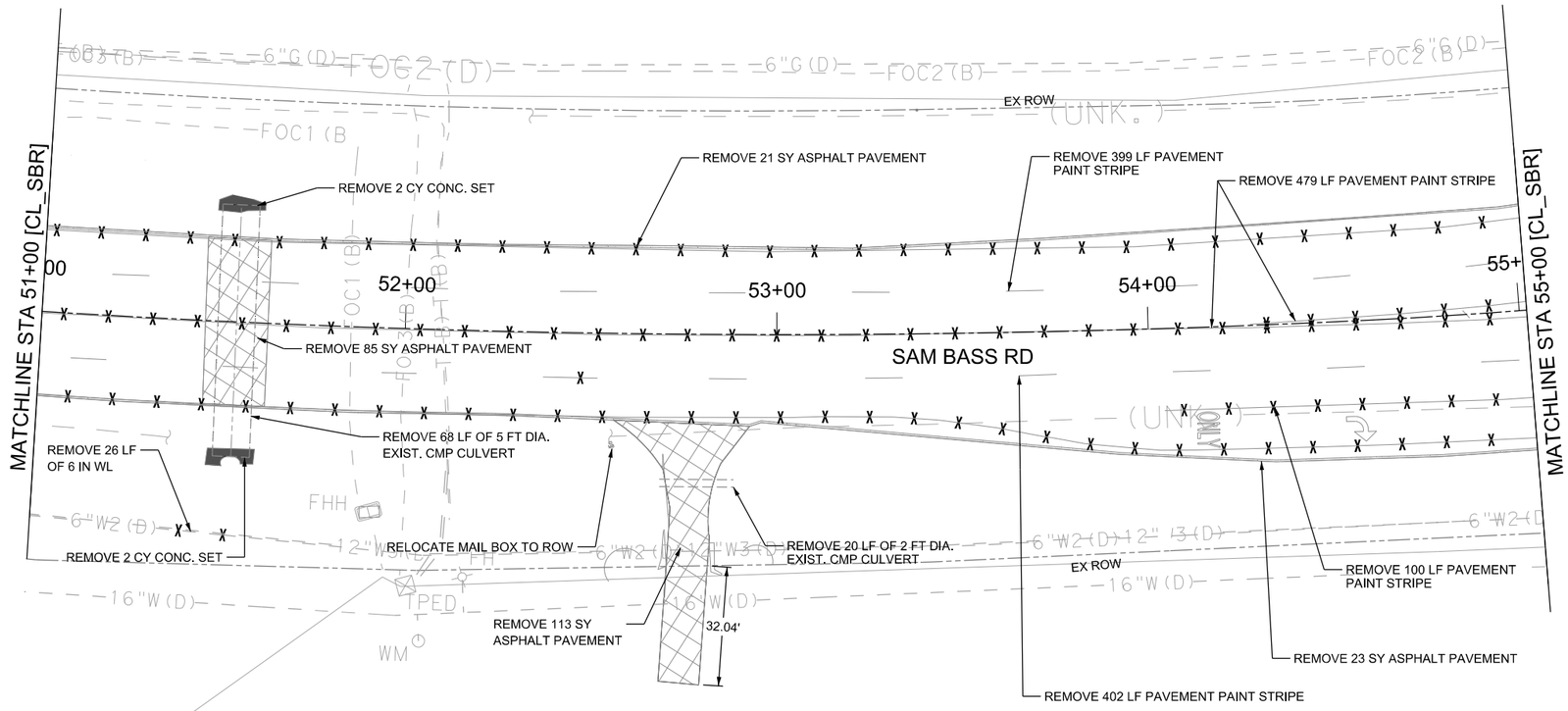

LEGEND

- DRIVEWAY REMOVAL
- ASPHALT REMOVAL
- CONCRETE REMOVAL
- SAW CUT LINE

NOTES:

1. UTILITIES SHOWN ARE APPROXIMATE AND MAY BE INCOMPLETE. CONTRACTOR IS RESPONSIBLE FOR LOCATING EXISTING UTILITIES HORIZONTALLY AND VERTICALLY PRIOR TO CONSTRUCTION
2. CONTRACTOR SHALL INSTALL TEMPORARY EROSION CONTROL MEASURES PRIOR TO COMMENCEMENT OF DEMOLITION OR CONSTRUCTION ACTIVITIES.
3. SEE TREE REMOVAL PLAN FOR MORE INFORMATION.
4. REMOVALS NOT SPECIFICALLY NOTED ON PLANS SHALL BE CONSIDERED SUBSIDIARY TO ITEM 100 PREPARING RIGHT OF WAY.
5. SEE DRIVEWAY PLANS FOR REPLACEMENT CULVERTS AND DRIVEWAY PAVING INFORMATION.
6. TREE REMOVAL SHALL BE SUBSIDIARY TO ITEM 100 PREPARING RIGHT OF WAY.
7. ABANDONED UNDERGROUND UTILITIES MAY BE ENCOUNTERED DURING EXCAVATION. tHESE UTILITIES SHALL BE REMOVED AND CONSIDERED INCIDENTAL TO EXCAVATION.
8. CONTRACTOR TO COORDINATE DRIVEWAY CLOSURE WITH FIRE DEPARTMENT. AT NO POINT SHALL BOTH DRIVEWAYS BE INOPERABLE

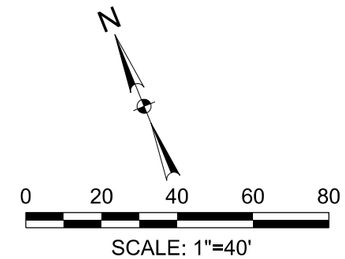

SCALE: 1"=40'

WYOMING SPRINGS
SEGMENT 1
ROUND ROCK, TX

ROUND ROCK TEXAS

halff
13620 BRANTWICK DR
BLDG C, STE 100
AUSTIN, TX 78729
(512) 777-4800
TBPELS FIRM #312

Revision No.	Date	Description

F-312 4/5/23
STATE OF TEXAS
JEFFREY L. NAGY
133255
LICENSED
PROFESSIONAL ENGINEER

100% SUBMITTAL

Project No.:	36179.002
Issued:	4/17/2023
Drawn By:	HW
Checked By:	JN
Scale:	1"=40'

Sheet Title
REMOVAL PLAN
(11 OF 12)

52
Sheet Number

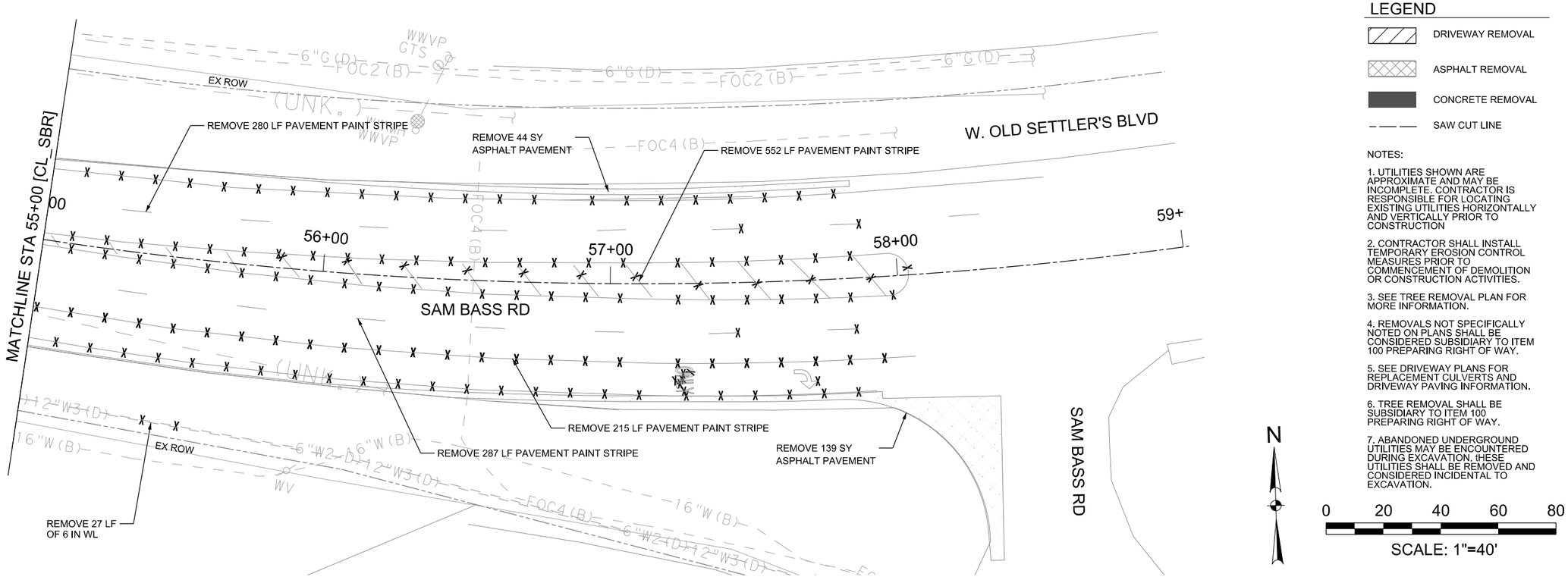

LEGEND

- DRIVEWAY REMOVAL
- ASPHALT REMOVAL
- CONCRETE REMOVAL
- SAW CUT LINE

NOTES:

1. UTILITIES SHOWN ARE APPROXIMATE AND MAY BE INCOMPLETE. CONTRACTOR IS RESPONSIBLE FOR LOCATING EXISTING UTILITIES HORIZONTALLY AND VERTICALLY PRIOR TO CONSTRUCTION
2. CONTRACTOR SHALL INSTALL TEMPORARY EROSION CONTROL MEASURES PRIOR TO COMMENCEMENT OF DEMOLITION OR CONSTRUCTION ACTIVITIES.
3. SEE TREE REMOVAL PLAN FOR MORE INFORMATION.
4. REMOVALS NOT SPECIFICALLY NOTED ON PLANS SHALL BE CONSIDERED SUBSIDIARY TO ITEM 100 PREPARING RIGHT OF WAY.
5. SEE DRIVEWAY PLANS FOR REPLACEMENT CULVERTS AND DRIVEWAY PAVING INFORMATION.
6. TREE REMOVAL SHALL BE SUBSIDIARY TO ITEM 100 PREPARING RIGHT OF WAY.
7. ABANDONED UNDERGROUND UTILITIES MAY BE ENCOUNTERED DURING EXCAVATION. tHESE UTILITIES SHALL BE REMOVED AND CONSIDERED INCIDENTAL TO EXCAVATION.

N

0 20 40 60 80

SCALE: 1"=40'

WYOMING SPRINGS
SEGMENT 1
ROUND ROCK, TX

ROUND ROCK TEXAS

halff
13620 BRANTWICK DR
BLDG C, STE 100
AUSTIN, TX 78729
(512) 777-4600
TBPELS FIRM #312

Revision No.	Date	Description
.	.	.
.	.	.
.	.	.
.	.	.
.	.	.
.	.	.
.	.	.
.	.	.

F-312 4/17/23
STATE OF TEXAS
JEFFREY L. NAGY
133255
LICENSED
PROFESSIONAL ENGINEER

100% SUBMITTAL

Project No.:	36179.002
Issued:	4/17/2023
Drawn By:	HW
Checked By:	JN
Scale:	1"=40'

Sheet Title
REMOVAL PLAN
(12 OF 12)

53
Sheet Number

TAG NO.	TREE DESCRIPTION	DIAMETER (IN.)	PROTECT	REMOVE
2049	LIVE OAK	18	YES	NO
30564	PECAN	20	YES	NO
30565	PECAN	20	YES	NO
30566	BOXELDER	15	YES	NO
30567	PECAN	12	YES	NO
30568	PECAN	30	NO	YES
30672	PECAN	24	YES	NO
30673	PECAN	18	YES	NO
30674	PECAN	20	YES	NO
30675	PECAN	21	YES	NO
30676	PECAN	19	YES	NO
30677	OAK	9	NO	YES
30680	OAK	18	NO	NO
30681	OAK	9	NO	YES
30682	OAK	8	NO	YES
30683	SYCAMORE	8	NO	YES
30684	PECAN	9	NO	YES
30685	PECAN	23	YES	NO
30686	PECAN	23	YES	NO
30687	OAK	22	YES	NO
30688	PECAN	43	YES	NO
30706	PECAN	15	YES	NO
30786	PECAN	17	NO	YES
30787	LIVE OAK	28	NO	YES
30984	PECAN	24	NO	NO
30985	PECAN	20	NO	NO
30986	PECAN	28	NO	NO
30987	ASH	18	NO	NO
30988	ASH	19	NO	NO
30989	PECAN	18	NO	NO
31023	LIVE OAK	20	NO	NO
31024	LIVE OAK	20	YES	NO
31025	LIVE OAK	24	YES	NO
31026	LIVE OAK	15	YES	NO
31027	CEDAR ELM	16	NO	NO
31028	CEDAR ELM	11	NO	NO
31029	CEDAR ELM	10	NO	NO
31030	CEDAR ELM	14	NO	NO
31031	CEDAR ELM	13	YES	NO
31032	CEDAR ELM	13	YES	NO
31033	CEDAR ELM	14	YES	NO
31034	CEDAR ELM	16	YES	NO
31035	CEDAR ELM	10	NO	NO
31036	CEDAR ELM	16	NO	NO
31037	CEDAR ELM	16	YES	NO
31038	CEDAR ELM	15	NO	NO
31039	CEDAR ELM	15	NO	NO
31040	CEDAR ELM	8	NO	NO
31041	CEDAR ELM	9	NO	NO
31042	CEDAR ELM	12	NO	NO
31043	CEDAR ELM	14	NO	NO
31044	LIVE OAK	28	NO	NO
31045	CEDAR ELM	11	NO	NO
31046	CEDAR ELM	10	NO	NO
31047	CEDAR ELM	11	NO	NO
31048	CEDAR ELM	11	NO	NO
31049	CEDAR ELM	9	NO	NO
31050	LIVE OAK	25	NO	NO
31051	LIVE OAK	30	YES	NO
31052	CEDAR ELM	13	NO	YES
31053	CEDAR ELM	13	NO	YES
31054	CEDAR ELM	10	NO	YES
31055	CEDAR ELM	12	NO	YES
31056	LIVE OAK	16	NO	NO
31057	LIVE OAK	17	YES	NO
31058	LIVE OAK	18	YES	NO
31059	LIVE OAK	16	YES	NO
31060	LIVE OAK	24	YES	NO
31061	LIVE OAK	16	YES	NO

TAG NO.	TREE DESCRIPTION	DIAMETER (IN.)	PROTECT	REMOVE
31062	LIVE OAK	12	YES	NO
31063	LIVE OAK	17	YES	NO
31064	CEDAR ELM	13	YES	NO
31065	LIVE OAK	19	YES	NO
31066	CEDAR ELM	8	YES	NO
31067	LIVE OAK	16	YES	NO
31068	LIVE OAK	22	YES	NO
31069	CEDAR ELM	10	YES	NO
31070	CEDAR ELM	9	YES	NO
31071	CEDAR ELM	9	YES	NO
31072	LIVE OAK	28	YES	NO
31073	LIVE OAK	15	YES	NO
31074	LIVE OAK	18	NO	YES
31075	CEDAR ELM	13	NO	YES
31076	CEDAR ELM	15	NO	YES
31077	LIVE OAK	17	NO	YES
31078	CEDAR ELM	17	NO	YES
31079	LIVE OAK	8	NO	YES
31365	CEDAR ELM	13	NO	YES
31366	LIVE OAK	33	YES	NO
31367	POST OAK	14	NO	YES
31368	CEDAR ELM	12	NO	YES
31369	CEDAR ELM	14	NO	YES
31370	POST OAK	13	NO	YES
31371	LIVE OAK	19	YES	NO
31372	POST OAK	21	NO	YES
31373	LIVE OAK	18	NO	YES
31374	LIVE OAK	20	NO	YES
31375	LIVE OAK	23	NO	YES
31376	CEDAR ELM	10	NO	YES
31377	LIVE OAK	42	NO	NO
31378	CEDAR ELM	11	NO	NO
31379	LIVE OAK	10	NO	NO
31380	LIVE OAK	17	NO	NO
31381	LIVE OAK	11	NO	NO
31382	LIVE OAK	12	NO	NO
31383	LIVE OAK	13	NO	NO
31384	LIVE OAK	21	NO	NO
31385	LIVE OAK	10	NO	NO
31386	LIVE OAK	9	NO	NO
31387	LIVE OAK	16	NO	NO
31388	LIVE OAK	11	NO	NO
31389	LIVE OAK	19	NO	NO
31390	LIVE OAK	13	NO	NO
31391	LIVE OAK	34	NO	NO
31392	LIVE OAK	21	NO	NO
31393	LIVE OAK	25	NO	NO
31394	BOXELDER	11	YES	NO
31395	LIVE OAK	27	NO	YES
31396	LIVE OAK	28	NO	NO
31397	LIVE OAK	14	NO	YES
31398	LIVE OAK	21	NO	YES
31399	LIVE OAK	14	NO	YES
31400	LIVE OAK	11	NO	YES
31401	LIVE OAK	22	NO	YES
31402	LIVE OAK	9	NO	YES
31403	LIVE OAK	8	NO	YES
31404	LIVE OAK	17	NO	YES
31405	LIVE OAK	13	NO	YES
31406	LIVE OAK	17	NO	YES
31407	LIVE OAK	16	NO	YES
31408	LIVE OAK	14	NO	YES
31409	LIVE OAK	8	NO	YES
31410	LIVE OAK	10	YES	NO
31411	LIVE OAK	15	NO	YES
35100	LIVE OAK	18	YES	NO
35101	LIVE OAK	16	YES	NO
35102	LIVE OAK	10	YES	NO
35103	LIVE OAK	10	YES	NO

TAG NO.	TREE DESCRIPTION	DIAMETER (IN.)	PROTECT	REMOVE
35104	LIVE OAK	13	YES	NO
35105	LIVE OAK	10	YES	NO
35106	LIVE OAK	21	YES	NO
35107	LIVE OAK	13	NO	YES
35108	LIVE OAK	31	YES	NO
35109	POST OAK	13	NO	YES
35110	POST OAK	23	NO	YES
35334	CEDAR ELM	14	NO	NO
35335	CEDAR ELM	12	NO	NO
35336	CEDAR ELM	22	NO	NO
35337	CEDAR ELM	12	NO	NO
35338	CEDAR ELM	8	NO	NO
35339	CEDAR ELM	8	NO	NO
35340	PECAN	15	NO	NO
35341	CEDAR ELM	12	NO	NO
35342	LIVE OAK	10	NO	NO
35343	CEDAR ELM	11	NO	NO
35344	PECAN	14	YES	NO
35345	PECAN	16	YES	NO
35346	CEDAR ELM	9	YES	NO
35347	PECAN	22	YES	NO
35348	CEDAR ELM	13	YES	NO
35349	CEDAR ELM	11	YES	NO
35350	HACKBERRY	13	YES	NO
35351	CEDAR ELM	12	NO	YES
35352	PECAN	48	YES	NO
35353	PECAN	17	YES	NO
35354	PECAN	13	YES	NO
35355	PECAN	15	YES	NO
35356	PECAN	14	YES	NO
35357	PECAN	17	YES	NO
35358	PECAN	18	YES	NO
35359	PECAN	17	YES	NO
35360	PECAN	17	YES	NO
35361	PECAN	16	YES	NO
35362	PECAN	19	YES	NO
35363	PECAN	11	NO	YES
35364	PECAN	9	YES	NO
35365	PECAN	15	YES	NO
35366	PECAN	19	YES	NO
35367	PECAN	21	YES	NO
35368	PECAN	24	YES	NO
35369	PECAN	24	YES	NO
35370	PECAN	12	NO	YES
35371	PECAN	20	YES	NO
35372	PECAN	10	NO	NO
35373	PECAN	19	NO	NO
35374	PECAN	43	NO	NO
35375	PECAN	24	NO	NO
35376	PECAN	12	NO	NO
35377	PECAN	16	NO	NO
35378	PECAN	24	NO	NO
35379	PECAN	18	NO	NO
35380	PECAN	12	YES	NO
35381	PECAN	19	YES	NO
35382	PECAN	16	NO	NO
35383	PECAN	21	NO	NO
35384	PECAN	12	NO	NO
35385	PECAN	18	NO	NO
35386	PECAN	21	NO	NO
35387	PECAN	19	NO	NO
35388	PECAN	12	NO	NO
41244	LIVE OAK	20	NO	NO
41245	CREPE MYRTLE	9	NO	NO
41246	SPANISH OAK	9	NO	NO
41247	SPANISH OAK	18	NO	NO
41248	SPANISH OAK	15	NO	NO
41249	CEDAR ELM	14	NO	NO
41250	BUR OAK	11	NO	NO

WYOMING SPRINGS
SEGMENT 1
ROUND ROCK, TX

ROUND ROCK TEXAS

halff
13620 BRANTWICK DR
BLDG C, STE 100
AUSTIN, TX 78729
(512) 777-4800
TBPELS FIRM #312

Revision No.	Date	Description

F-312 4/5/23
STATE OF TEXAS
JEFFREY L. NAGY
133255
LICENSED
PROFESSIONAL ENGINEER

100% SUBMITTAL

Project No.:	36179.002
Issued:	4/17/2023
Drawn By:	SG
Checked By:	JN
Scale:	N.T.S

Sheet Title
TREE LIST
(1 OF 3)

54
Sheet Number

USER: JMAY_PENHALETA
P:\PW\HALFF_DFW\36179.002\CAD\Sheets\SHEET LIST.dgn
4/17/2023 10:59:58 AM
dwg
Sheet
D:\000000\36179\002\CAD\Sheets\SHEET LIST.dgn

TAG NO.	TREE DESCRIPTION	DIAMETER (IN.)	PROTECT	REMOVE
41251	LIVE OAK	12	NO	NO
41252	SPANISH OAK	11	NO	NO
41253	LIVE OAK	8	NO	NO
41254	LIVE OAK	19	NO	NO
43421	HACKBERRY	9	NO	NO
43422	CEDAR ELM	8	NO	NO
43423	LIVE OAK	8	NO	NO
43424	LIVE OAK	24	NO	NO
43425	LIVE OAK	14	NO	NO
43426	LIVE OAK	15	NO	NO
43427	LIVE OAK	12	NO	NO
43428	LIVE OAK	10	NO	NO
43429	HACKBERRY	20	NO	NO
43430	LIVE OAK	9	NO	NO
43431	LIVE OAK	8	YES	NO
43432	LIVE OAK	14	YES	NO
43433	LIVE OAK	15	YES	NO
43434	LIVE OAK	13	NO	NO
43435	LIVE OAK	12	NO	NO
43436	LIVE OAK	11	NO	NO
43437	LIVE OAK	12	NO	NO
43438	LIVE OAK	11	NO	NO
43439	LIVE OAK	19	NO	NO
43440	LIVE OAK	16	NO	NO
43441	LIVE OAK	12	YES	NO
43442	LIVE OAK	8	YES	NO
43443	LIVE OAK	13	YES	NO
43444	LIVE OAK	16	YES	NO
43445	CHINA BERRY	12	YES	NO
43446	LIVE OAK	12	NO	NO
43447	LIVE OAK	16	NO	NO
43448	LIVE OAK	12	NO	NO
43449	LIVE OAK	16	NO	NO
43450	LIVE OAK	11	YES	NO
43451	CHINA BERRY	22	YES	NO
43452	LIVE OAK	10	YES	NO
43453	LIVE OAK	8	YES	NO
43454	LIVE OAK	14	NO	NO
43455	LIVE OAK	13	NO	NO
43456	LIVE OAK	12	YES	NO
43457	LIVE OAK	11	YES	NO
43458	LIVE OAK	8	YES	NO
43459	LIVE OAK	14	NO	YES
43460	HACKBERRY	15	NO	YES
43461	LIVE OAK	14	NO	NO
43462	LIVE OAK	15	NO	NO
43466	CREPE	17	NO	NO
43467	PECAN	15	NO	NO
43468	PECAN	18	NO	NO
43469	LIVE OAK	19	NO	NO
43470	CREPE	14	NO	NO
43471	CREPE	11	NO	NO
43472	CEDAR ELM	21	NO	NO
43473	CEDAR ELM	12	NO	NO
43474	CEDAR ELM	16	NO	NO
43475	CEDAR ELM	14	NO	NO
43476	CEDAR ELM	15	NO	NO
43477	LIVE OAK	25	NO	NO
43478	LIVE OAK	20	NO	NO
43479	LIVE OAK	35	NO	NO
43480	LIVE OAK	25	NO	NO
43481	LIVE OAK	17	NO	NO
43482	CEDAR ELM	20	NO	NO
43483	CEDAR ELM	17	NO	NO
43484	CEDAR ELM	14	NO	NO
43485	CEDAR ELM	10	NO	NO
43486	LIVE OAK	25	NO	NO
43487	CEDAR ELM	19	NO	NO
43488	LIVE OAK	46	NO	NO

TAG NO.	TREE DESCRIPTION	DIAMETER (IN.)	PROTECT	REMOVE
43489	CEDAR ELM	16	NO	NO
43490	CEDAR ELM	14	NO	NO
43491	LIVE OAK	22	NO	NO
43493	LIVE OAK	17	NO	NO
43494	LIVE OAK	30	NO	NO
43694	LIVE OAK	16	NO	NO
43695	LIVE OAK	12	NO	NO
43696	CEDAR ELM	9	NO	NO
43697	CEDAR ELM	9	NO	NO
43698	CEDAR ELM	12	YES	NO
43699	CEDAR ELM	13	YES	NO
43700	CEDAR ELM	10	YES	NO
43701	CEDAR ELM	15	YES	NO
43702	HACKBERRY	14	YES	NO
43703	CEDAR ELM	10	YES	NO
43704	HACKBERRY	13	YES	NO
43705	CEDAR ELM	8	NO	NO
43708	LIVE OAK	19	NO	NO
43709	LIVE OAK	15	NO	NO
43847	LIVE OAK	20	NO	NO
43848	LIVE OAK	18	NO	NO
43849	LIVE OAK	25	NO	NO
43850	LIVE OAK	32	NO	NO
43851	LIVE OAK	41	NO	NO
43852	LIVE OAK	14	NO	NO
43853	LIVE OAK	20	NO	NO
43854	LIVE OAK	22	NO	NO
43855	LIVE OAK	37	NO	NO
43856	LIVE OAK	23	YES	NO
43857	LIVE OAK	14	NO	YES
43858	LIVE OAK	14	NO	YES
43859	LIVE OAK	15	NO	YES
43860	LIVE OAK	17	NO	YES
43861	LIVE OAK	19	NO	YES
43862	CEDAR ELM	13	NO	YES
43863	LIVE OAK	17	NO	YES
43864	CEDAR ELM	14	NO	YES
43865	LIVE OAK	22	NO	YES
43866	CEDAR ELM	14	NO	YES
43867	LIVE OAK	31	NO	YES
43868	CEDAR ELM	12	NO	YES
43869	CEDAR ELM	13	NO	YES
43870	CEDAR ELM	8	NO	YES
43871	CEDAR ELM	13	NO	YES
43872	CEDAR ELM	10	YES	NO
43873	CEDAR ELM	12	YES	NO
43874	CEDAR ELM	15	YES	NO
43875	CEDAR ELM	11	YES	NO
43884	LIVE OAK	20	NO	YES
43885	LIVE OAK	10	NO	YES
43894	LIVE OAK	22	NO	NO
43895	LIVE OAK	29	NO	YES
43896	CEDAR ELM	13	NO	NO
43897	CEDAR ELM	21	NO	NO
43900	LIVE OAK	27	NO	NO
43901	LIVE OAK	24	NO	NO
43902	LIVE OAK	19	NO	NO
43903	CEDAR ELM	10	NO	YES
43904	CEDAR ELM	22	YES	NO
43906	POST OAK	15	NO	NO
43907	POST OAK	11	NO	NO
43908	CEDAR ELM	13	NO	NO
43909	POST OAK	26	NO	NO
43910	CEDAR ELM	10	YES	NO
43911	CEDAR ELM	8	YES	NO
43912	CEDAR ELM	23	NO	YES
43913	CEDAR ELM	9	YES	NO
43914	CEDAR ELM	18	YES	NO
43915	CEDAR ELM	15	YES	NO

TAG NO.	TREE DESCRIPTION	DIAMETER (IN.)	PROTECT	REMOVE
43916	CEDAR ELM	13	YES	NO
43917	CEDAR ELM	13	YES	NO
44218	LIVE OAK	10	NO	NO
44219	LIVE OAK	31	NO	NO
44220	CEDAR ELM	9	NO	NO
44221	LIVE OAK	20	YES	NO
44222	LIVE OAK	22	NO	YES
44223	LIVE OAK	8	NO	YES
44224	LIVE OAK	11	NO	YES
44225	LIVE OAK	16	NO	YES
44226	LIVE OAK	9	NO	YES
44227	LIVE OAK	14	NO	YES
44228	LIVE OAK	10	NO	YES
44229	LIVE OAK	17	NO	YES
44230	LIVE OAK	13	NO	YES
44231	LIVE OAK	15	NO	YES
44232	LIVE OAK	28	NO	YES
44233	LIVE OAK	16	NO	NO
44234	LIVE OAK	16	NO	NO
44235	LIVE OAK	11	NO	NO
44236	LIVE OAK	26	NO	NO
44237	LIVE OAK	13	NO	YES
44238	CEDAR ELM	9	NO	NO
44239	LIVE OAK	26	NO	NO
44240	LIVE OAK	10	NO	NO
44241	CEDAR ELM	16	YES	NO
44242	CEDAR ELM	12	YES	NO
44243	CEDAR ELM	9	YES	NO
44244	CEDAR ELM	11	NO	YES
44245	CEDAR ELM	11	NO	YES
44246	CEDAR ELM	10	NO	YES
44247	CEDAR ELM	8	YES	NO
44248	CEDAR ELM	9	NO	YES
44249	CEDAR ELM	10	NO	YES
44250	CEDAR ELM	11	YES	NO
44251	CEDAR ELM	8	YES	NO
44252	CEDAR ELM	11	YES	NO
44253	CEDAR ELM	12	YES	NO
44254	CEDAR ELM	14	YES	NO
44255	CEDAR ELM	10	YES	NO
44256	LIVE OAK	20	YES	NO
44257	LIVE OAK	24	YES	NO
44258	CEDAR ELM	19	YES	NO
44259	CEDAR ELM	8	YES	NO
44260	LIVE OAK	12	YES	NO
44261	LIVE OAK	14	YES	NO
44262	CEDAR ELM	12	NO	YES
44263	LIVE OAK	15	YES	NO
44264	CEDAR ELM	15	YES	NO
44265	LIVE OAK	12	YES	NO
44266	LIVE OAK	12	YES	NO
44267	LIVE OAK	17	YES	NO
44268	LIVE OAK	8	YES	NO
44269	LIVE OAK	25	YES	NO
44270	LIVE OAK	18	YES	NO
44271	LIVE OAK	27	YES	NO
44272	CEDAR ELM	13	YES	NO
44273	CEDAR ELM	18	YES	NO
44274	CEDAR ELM	32	YES	NO
44275	LIVE OAK	24	YES	NO
44276	WINGED ELM	11	YES	NO
44277	BLACK WILLOW	13	NO	NO
44278	SYCAMORE	8	NO	NO
44279	SYCAMORE	9	NO	NO
44281	ASH	14	YES	NO
44282	SYCAMORE	11	YES	NO
44283	WINGED ELM	9	NO	YES
44284	WINGED ELM	15	YES	NO
44285	SYCAMORE	11	YES	NO

WYOMING SPRINGS
SEGMENT 1
ROUND ROCK, TX

ROUND ROCK TEXAS

halff
13620 BRANTWICK DR
BLDG C, STE 100
AUSTIN, TX 78729
(512) 777-4600
TBPELS FIRM #312

Revision No.	Date	Description

4/5/23
STATE OF TEXAS
JEFFREY L NAGY
133255
LICENSED
PROFESSIONAL
ENGINEER

100% SUBMITTAL

Project No.:	36179.002
Issued:	4/17/2023
Drawn By:	SG
Checked By:	JN
Scale:	N.T.S

Sheet Title
TREE LIST
(2 OF 3)

55
Sheet Number

41720223 1035935 AM ak3914 HALFF Xrefs: E:\Projects\36179.002\CAD\Sheets\Utility\36179.002_TREE LIST-TL2.dgn
Last Saved By: JAMES_JEFFERSON
Plotted By: JAMES_JEFFERSON
Plot Date: 4/17/2023 10:35:59 AM

TAG NO.	TREE DESCRIPTION	DIAMETER (IN.)	PROTECT	REMOVE
44286	WINGED ELM	8	NO	YES
44287	WINGED ELM	11	NO	YES
44288	WINGED ELM	8	NO	YES
44289	PECAN	21	YES	NO
44290	PECAN	10	YES	NO
44291	PECAN	18	YES	NO
44292	PECAN	20	NO	YES
44293	PECAN	13	NO	YES
44294	PECAN	17	NO	YES
44295	PECAN	12	NO	YES
44296	PECAN	8	NO	YES
44297	PECAN	14	NO	YES
44298	PECAN	14	NO	YES
44299	PECAN	17	NO	YES
44300	PECAN	20	YES	NO
44301	PECAN	14	NO	YES
44302	PECAN	12	NO	YES
44303	PECAN	19	NO	YES
44304	PECAN	17	NO	YES
44305	PECAN	14	YES	NO
44306	PECAN	21	YES	NO
44307	PECAN	18	YES	NO
44308	PECAN	25	YES	NO
44309	PECAN	21	YES	NO
44310	PECAN	28	NO	YES
44311	PECAN	21	NO	YES
44312	PECAN	11	NO	YES
44313	PECAN	23	NO	YES
44314	PECAN	24	NO	YES
44315	PECAN	14	YES	NO
44316	PECAN	15	YES	NO
44317	PECAN	19	NO	YES
44318	PECAN	15	YES	NO
44319	PECAN	14	YES	NO
44320	PECAN	15	NO	YES
44321	PECAN	16	NO	YES
44322	PECAN	19	NO	YES
44323	PECAN	12	NO	YES
44324	CEDAR ELM	14	NO	YES
44325	CEDAR ELM	13	NO	YES
44326	CEDAR ELM	17	NO	YES
44327	LIVE OAK	18	NO	YES
44328	CEDAR ELM	8	NO	YES
44329	CEDAR ELM	10	NO	YES
44330	CEDAR ELM	10	NO	YES
44334	LIVE OAK	38	NO	YES
44335	CEDAR ELM	14	NO	YES
44336	CEDAR ELM	9	NO	YES
44337	POST OAK	39	YES	NO
44338	CEDAR ELM	13	NO	NO
44339	CEDAR ELM	12	YES	NO
44340	CEDAR ELM	9	YES	NO
44341	CEDAR ELM	15	NO	YES
44342	CEDAR ELM	9	NO	YES
44343	CEDAR ELM	9	NO	YES
44344	CEDAR ELM	16	YES	NO
44345	CEDAR ELM	8	NO	YES
44346	CEDAR ELM	8	NO	YES
44347	CEDAR ELM	12	NO	YES
44348	CEDAR ELM	11	NO	YES
44349	CEDAR ELM	9	NO	YES
44350	CEDAR ELM	9	NO	YES
44351	CEDAR ELM	9	NO	YES
44352	CEDAR ELM	13	YES	NO
44353	CEDAR ELM	12	NO	YES
44354	CEDAR ELM	17	NO	YES
44355	CEDAR ELM	9	NO	YES
44356	CEDAR ELM	10	NO	YES
44357	CEDAR ELM	14	NO	YES

TAG NO.	TREE DESCRIPTION	DIAMETER (IN.)	PROTECT	REMOVE
44358	CEDAR ELM	8	NO	NO
44359	CEDAR ELM	9	NO	NO
44360	CEDAR ELM	12	YES	NO
44361	CEDAR ELM	8	YES	NO
44362	CEDAR ELM	9	YES	NO
44363	CEDAR ELM	14	YES	NO
44364	CEDAR ELM	9	NO	YES
44365	CEDAR ELM	11	NO	YES
44366	CEDAR ELM	8	NO	YES
44367	CEDAR ELM	8	NO	YES
44368	CEDAR ELM	8	NO	YES
44369	CEDAR ELM	8	NO	NO
44370	CEDAR ELM	9	NO	YES
44371	CEDAR ELM	9	NO	YES
44372	CEDAR ELM	12	NO	YES
44373	CEDAR ELM	10	NO	YES
44374	CEDAR ELM	11	NO	YES
44375	CEDAR ELM	14	NO	YES
44376	CEDAR ELM	9	YES	NO
44377	POST OAK	27	YES	NO
44378	POST OAK	20	YES	NO
44379	CEDAR ELM	11	NO	YES
44380	CEDAR ELM	9	NO	YES
44381	ASH	9	NO	YES
44382	CEDAR ELM	8	NO	YES
44383	CEDAR ELM	11	YES	NO
44384	CEDAR ELM	10	YES	NO
44385	CEDAR ELM	10	NO	YES
44386	CEDAR ELM	9	NO	YES
44387	CEDAR ELM	9	YES	NO
44388	POST OAK	26	NO	YES
44389	CEDAR ELM	18	NO	YES
44390	CEDAR ELM	15	YES	NO
44391	CEDAR ELM	13	YES	NO
44392	CEDAR ELM	18	NO	YES
44393	CEDAR ELM	10	NO	YES
44394	CEDAR ELM	13	NO	YES
44395	CEDAR ELM	11	NO	YES
44396	CEDAR ELM	11	NO	YES
44397	CEDAR ELM	16	NO	YES
44398	CEDAR ELM	9	NO	YES
44399	CEDAR ELM	12	NO	YES
44400	CEDAR ELM	11	NO	YES
44401	OAK	10	YES	NO
44402	CEDAR ELM	10	YES	NO
44403	CEDAR ELM	9	YES	NO
44404	CEDAR ELM	19	NO	NO
44405	CEDAR ELM	8	NO	YES
44406	CEDAR ELM	8	NO	YES
44608	LIVE OAK	15	NO	NO
44609	CEDAR ELM	14	NO	NO
44610	LIVE OAK	12	NO	YES
44611	CEDAR ELM	22	NO	YES
44612	LIVE OAK	39	YES	NO
44613	LIVE OAK	14	NO	YES
44614	LIVE OAK	12	NO	YES
44615	LIVE OAK	9	NO	YES
44616	CEDAR ELM	16	NO	NO
44617	LIVE OAK	11	NO	NO
44618	LIVE OAK	10	NO	NO
44619	LIVE OAK	9	YES	NO
44620	LIVE OAK	11	NO	NO
44621	LIVE OAK	17	NO	NO
44622	LIVE OAK	18	NO	NO
44623	LIVE OAK	15	NO	NO
44624	LIVE OAK	12	YES	NO
44625	LIVE OAK	20	NO	YES
44626	LIVE OAK	9	NO	YES
44627	LIVE OAK	19	YES	NO

TAG NO.	TREE DESCRIPTION	DIAMETER (IN.)	PROTECT	REMOVE
44628	LIVE OAK	19	NO	NO
80063	LIVE OAK	27	YES	NO
80064	LIVE OAK	31	YES	NO
80065	LIVE OAK	8	YES	NO
80066	LIVE OAK	17	YES	NO
80067	LIVE OAK	21	YES	NO
80068	LIVE OAK	22	YES	NO
80165	LIVE OAK	32	NO	NO
80166	ELM	11	NO	NO
80167	LIVE OAK	21	NO	NO
80168	LIVE OAK	24	NO	NO

WYOMING SPRINGS
SEGMENT 1
ROUND ROCK, TX

ROUND ROCK TEXAS

halff
13620 BRANTWICK DR
BLDG C, STE 100
AUSTIN, TX 78729
(512) 777-4600
TBPELS FIRM #312

Revision No.	Date	Description
.	.	.
.	.	.
.	.	.
.	.	.
.	.	.
.	.	.
.	.	.
.	.	.

STATE OF TEXAS
JEFFREY L NAGY
133255
LICENSED
PROFESSIONAL ENGINEER
4/17/23

100% SUBMITTAL

Project No.:	36179.002
Issued:	4/17/2023
Drawn By:	SG
Checked By:	JN
Scale:	N.T.S

Sheet Title
TREE LIST
(3 OF 3)

56
Sheet Number

User: EMORGAN
Plotted: 17 Apr 2023 - 10:51AM
File: J:\HALFF_JOBS\36179.002\CAD\Sheets\ARCH\36179.002_TREE LIST (3 OF 3).dgn
Xref: ...\...\...\

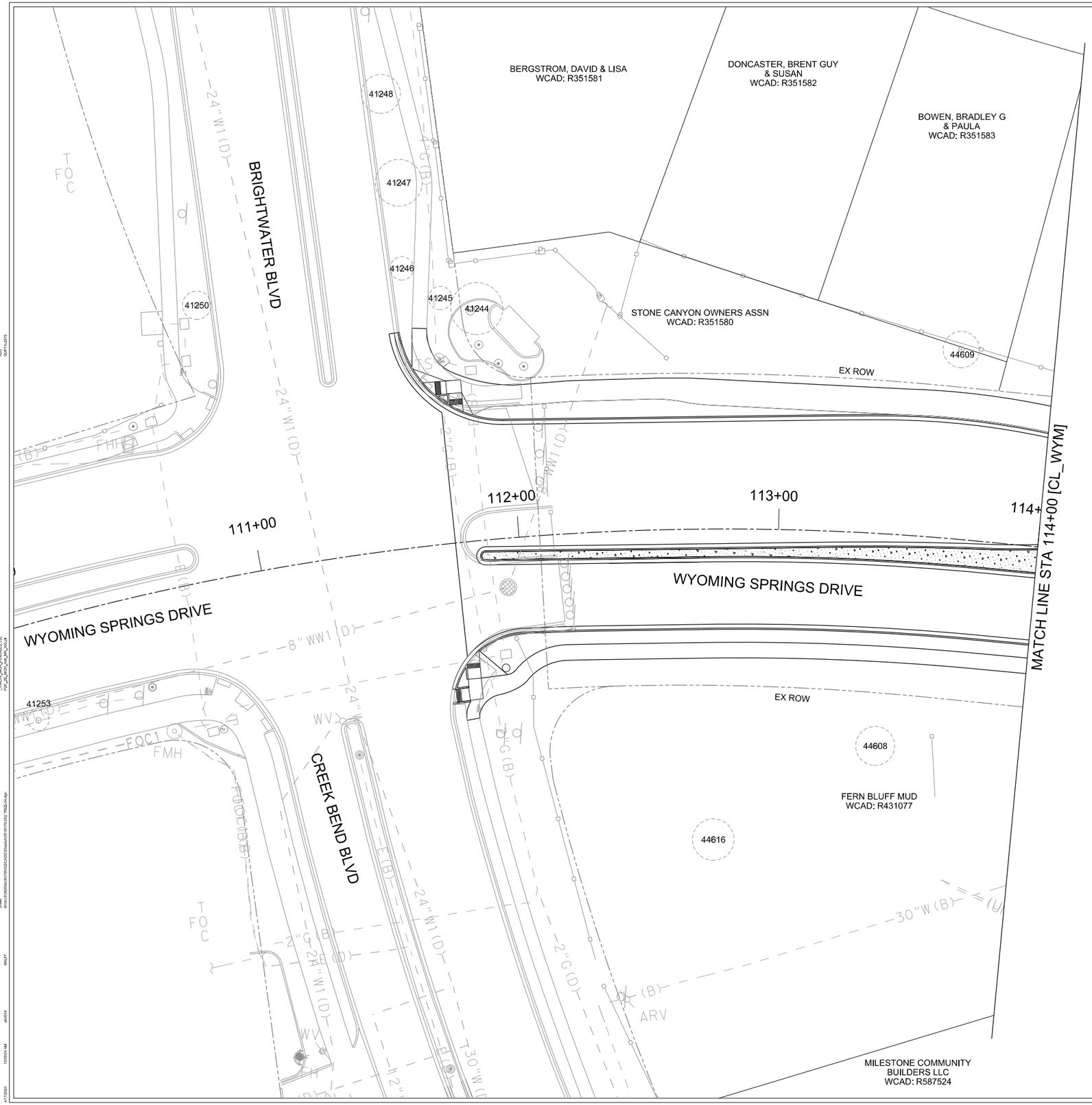

LEGEND

- TREE TO REMAIN
- TREE TO BE PROTECTED
- TREE TO BE REMOVED
- PROPERTY LINE
- PROPOSED ROW
- EXISTING ROW
- EASEMENT
- EXISTING FEATURES
- EXISTING FENCE LINE WORK
- RETAINING WALLS
- STORM MANHOLE
- POWER POLE
- LIGHT POLE
- SIGN
- FIRE HYDRANT
- TREE WELLS

NOTES:
1. TREES SHOWN ARE SURVEYED TREES 8-IN CALIPER OR ABOVE CLASSIFIES AS PROTECTED BY CITY OF ROUND ROCK ORDINANCE. CERTAIN TREE SPECIES LARGER THAN 8-IN MAY NOT BE SHOWN IN THE PLAN.

2. REMOVAL OF SHRUBS, BRUSH AND TREES NOT SHOWN ON THIS PLAN SHALL BE CONSIDERED SUBSIDIARY TO ITEM 100 PREPARATION OF RIGHT OF WAY.

3. TREE REMOVAL SHALL BE SUBSIDIARY TO ITEM 100 PREPARING RIGHT OF WAY.

4. TREE PROTECTION FENCE IS DEPICTED AS THE CRITICAL ROOT ZONE OF EACH TREE. CONTRACTOR SHALL PLACE FENCING A MINIMUM OF 4-FT FROM THE PROPOSED BACK-OF-CURB, WHERE APPLICABLE, TO ALLOW FOR PLACEMENT OF ROADWAY SUBGRADE MATERIALS.

N

0 20 40 60 80

SCALE: 1"=40'

WYOMING SPRINGS
SEGMENT 1
ROUND ROCK, TX

ROUND ROCK TEXAS

halff
13620 BRANTWICK DR
BLDG C, STE 100
AUSTIN, TX 78729
(512) 777-4600
TBPELS FIRM #312

Revision No.	Date	Description

F-312 4/5/23
STATE OF TEXAS
JEFFREY L. NAGY
133255
LICENSED
PROFESSIONAL ENGINEER

100% SUBMITTAL

Project No.:	36179.002
Issued:	4/17/2023
Drawn By:	SG
Checked By:	JN
Scale:	1"=40'

Sheet Title
TREE REMOVAL AND PROTECTION PLAN (1 OF 19)

57
Sheet Number

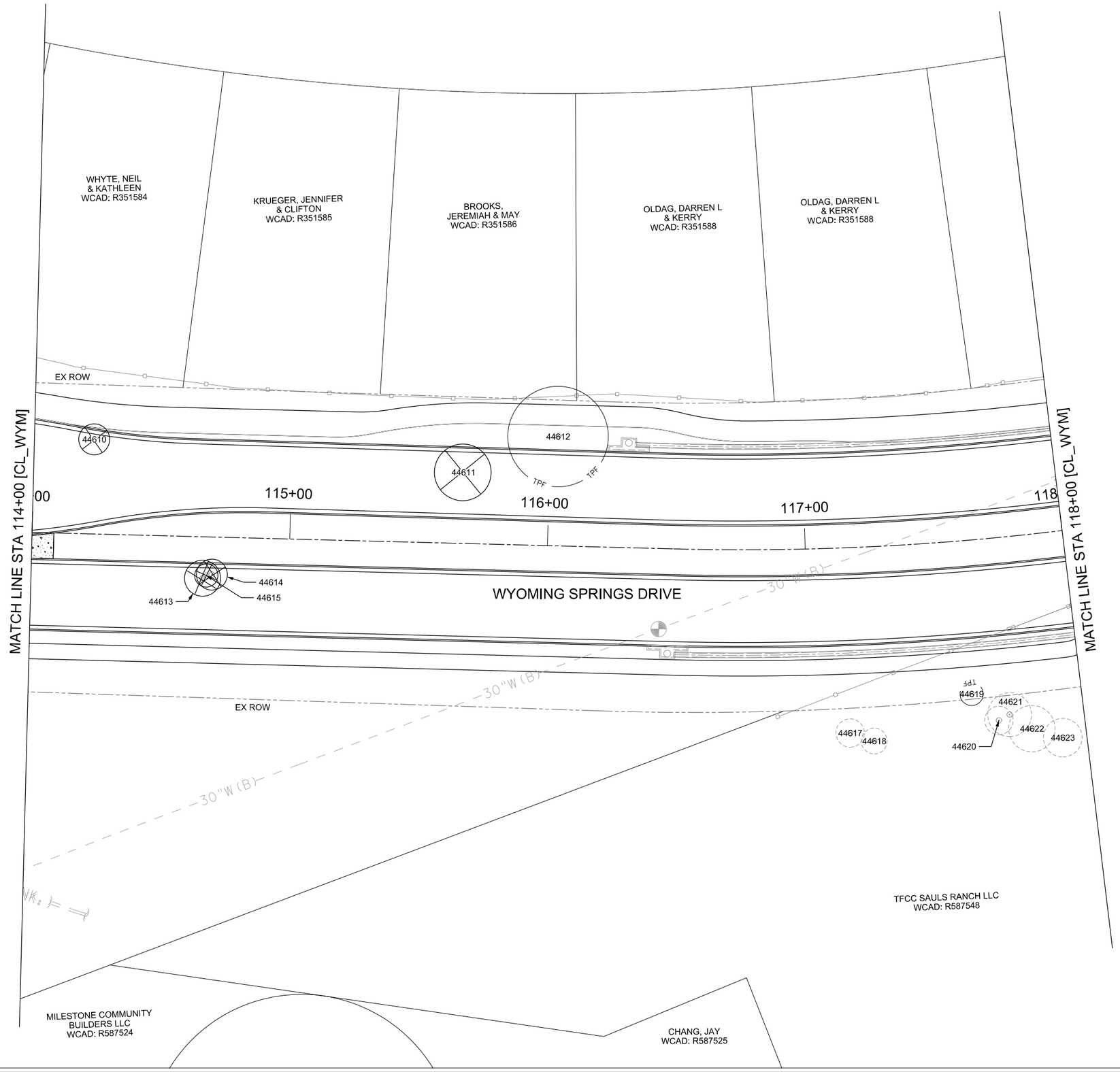

LEGEND

- TREE TO REMAIN
- TREE TO BE PROTECTED (TPF)
- TREE TO BE REMOVED
- PROPERTY LINE
- PROPOSED ROW
- EXISTING ROW
- EASEMENT
- EXISTING FEATURES
- EXISTING FENCE LINE WORK
- RETAINING WALLS
- STORM MANHOLE
- POWER POLE
- LIGHT POLE
- SIGN
- FIRE HYDRANT
- TREE WELLS

NOTES:
1. TREES SHOWN ARE SURVEYED TREES 8-IN CALIPER OR ABOVE CLASSIFIES AS PROTECTED BY CITY OF ROUND ROCK ORDINANCE. CERTAIN TREE SPECIES LARGER THAN 8-IN MAY NOT BE SHOWN IN THE PLAN.

2. REMOVAL OF SHRUBS. BRUSH AND TREES NOT SHOWN ON THIS PLAN SHALL BE CONSIDERED SUBSIDIARY TO ITEM 100 PREPARATION OF RIGHT OF WAY.

3. TREE REMOVAL SHALL BE SUBSIDIARY TO ITEM 100 PREPARING RIGHT OF WAY.

4. TREE PROTECTION FENCE IS DEPICTED AS THE CRITICAL ROOT ZONE OF EACH TREE. CONTRACTOR SHALL PLACE FENCING A MINIMUM OF 4-FT FROM THE PROPOSED BACK-OF-CURB, WHERE APPLICABLE, TO ALLOW FOR PLACEMENT OF ROADWAY SUBGRADE MATERIALS.

N

0 20 40 60 80

SCALE: 1"=40'

WYOMING SPRINGS
SEGMENT 1
ROUND ROCK, TX

ROUND ROCK TEXAS

halff
13620 BRANTWICK DR
BLDG C, STE 100
AUSTIN, TX 78729
(512) 777-4600
TBPELS FIRM #312

Revision No.	Date	Description

F-312 4/5/23
STATE OF TEXAS
JEFFREY L. NAGY
133255
LICENSED
PROFESSIONAL ENGINEER

100% SUBMITTAL

Project No.:	36179.002
Issued:	4/17/2023
Drawn By:	SG
Checked By:	JN
Scale:	1"=40'

Sheet Title
TREE REMOVAL AND PROTECTION PLAN
(2 OF 19)

58
Sheet Number

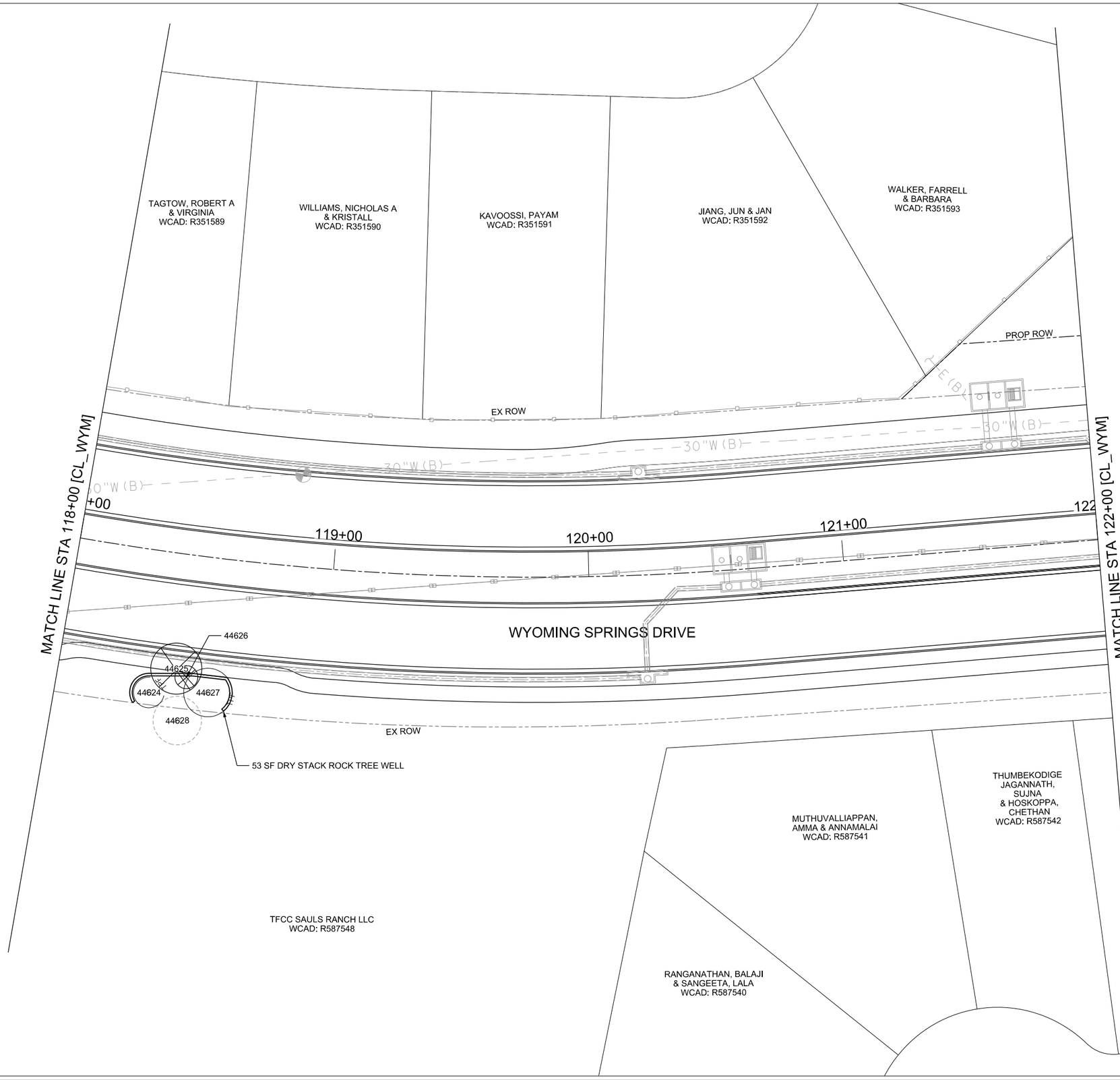

LEGEND

- TREE TO REMAIN
- TREE TO BE PROTECTED
- TREE TO BE REMOVED
- PROPERTY LINE
- PROPOSED ROW
- EXISTING ROW
- EASEMENT
- EXISTING FEATURES
- EXISTING FENCE LINE WORK
- RETAINING WALLS
- STORM MANHOLE
- POWER POLE
- LIGHT POLE
- SIGN
- FIRE HYDRANT
- TREE WELLS

NOTES:
1. TREES SHOWN ARE SURVEYED TREES 8-IN CALIPER OR ABOVE CLASSIFIES AS PROTECTED BY CITY OF ROUND ROCK ORDINANCE. CERTAIN TREE SPECIES LARGER THAN 8-IN MAY NOT BE SHOWN IN THE PLAN.

2. REMOVAL OF SHRUBS, BRUSH AND TREES NOT SHOWN ON THIS PLAN SHALL BE CONSIDERED SUBSIDIARY TO ITEM 100 PREPARATION OF RIGHT OF WAY.

3. TREE REMOVAL SHALL BE SUBSIDIARY TO ITEM 100 PREPARING RIGHT OF WAY.

4. TREE PROTECTION FENCE IS DEPICTED AS THE CRITICAL ROOT ZONE OF EACH TREE. CONTRACTOR SHALL PLACE FENCING A MINIMUM OF 4-FT FROM THE PROPOSED BACK-OF-CURB, WHERE APPLICABLE, TO ALLOW FOR PLACEMENT OF ROADWAY SUBGRADE MATERIALS.

N

0 20 40 60 80

SCALE: 1"=40'

WYOMING SPRINGS
SEGMENT 1
ROUND ROCK, TX

ROUND ROCK TEXAS

halff
13620 BRANTWICK DR
BLDG C, STE 100
AUSTIN, TX 78729
(512) 777-4600
TBPELS FIRM #312

Revision No.	Date	Description

F-312 4/5/23
STATE OF TEXAS
JEFFREY L. NAGY
133255
LICENSED PROFESSIONAL ENGINEER

100% SUBMITTAL

Project No.:	36179.002
Issued:	4/17/2023
Drawn By:	SG
Checked By:	JN
Scale:	1"=40'

Sheet Title
TREE REMOVAL AND PROTECTION PLAN
(3 OF 19)

59
Sheet Number

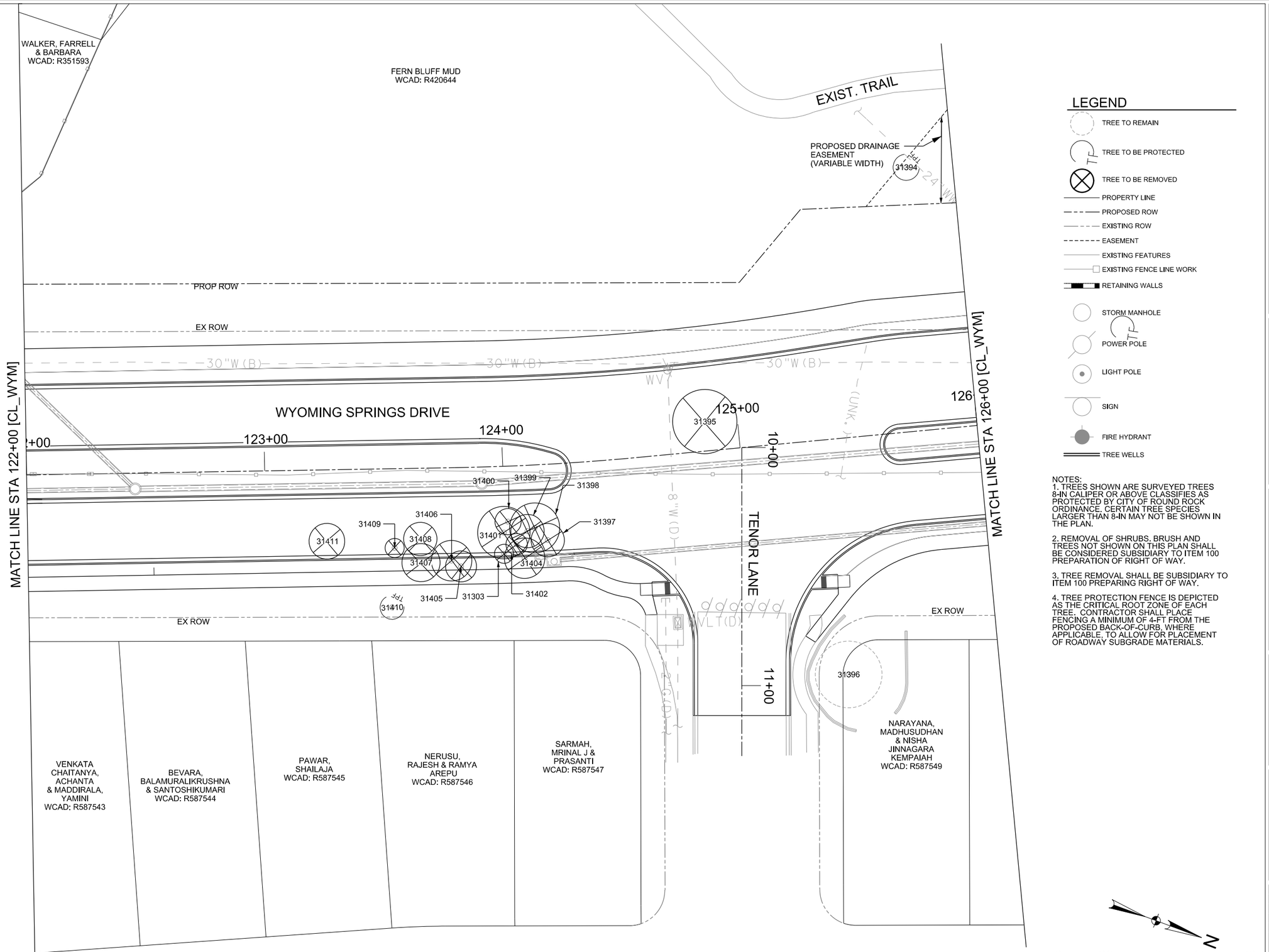

LEGEND

- TREE TO REMAIN
- TREE TO BE PROTECTED
- TREE TO BE REMOVED
- PROPERTY LINE
- PROPOSED ROW
- EXISTING ROW
- EASEMENT
- EXISTING FEATURES
- EXISTING FENCE LINE WORK
- RETAINING WALLS
- STORM MANHOLE
- POWER POLE
- LIGHT POLE
- SIGN
- FIRE HYDRANT
- TREE WELLS

NOTES:
1. TREES SHOWN ARE SURVEYED TREES 8-IN CALIPER OR ABOVE CLASSIFIES AS PROTECTED BY CITY OF ROUND ROCK ORDINANCE. CERTAIN TREE SPECIES LARGER THAN 8-IN MAY NOT BE SHOWN IN THE PLAN.

2. REMOVAL OF SHRUBS, BRUSH AND TREES NOT SHOWN ON THIS PLAN SHALL BE CONSIDERED SUBSIDIARY TO ITEM 100 PREPARATION OF RIGHT OF WAY.

3. TREE REMOVAL SHALL BE SUBSIDIARY TO ITEM 100 PREPARING RIGHT OF WAY.

4. TREE PROTECTION FENCE IS DEPICTED AS THE CRITICAL ROOT ZONE OF EACH TREE. CONTRACTOR SHALL PLACE FENCING A MINIMUM OF 4-FT FROM THE PROPOSED BACK-OF-CURB, WHERE APPLICABLE, TO ALLOW FOR PLACEMENT OF ROADWAY SUBGRADE MATERIALS.

N

0 20 40 60 80

SCALE: 1"=40'

WYOMING SPRINGS
SEGMENT 1
ROUND ROCK, TX

ROUND ROCK TEXAS

halff
13620 BRANTWICK DR
BLDG C, STE 100
AUSTIN, TX 78729
(512) 777-4600
TBPELS FIRM #312

Revision No.	Date	Description

STATE OF TEXAS
JEFFREY L NAGY
133255
LICENSED PROFESSIONAL ENGINEER
4/17/23

100% SUBMITTAL

Project No.:	36179.002
Issued:	4/17/2023
Drawn By:	SG
Checked By:	JN
Scale:	1"=40'

Sheet Title
TREE REMOVAL AND PROTECTION PLAN (4 OF 19)

60
Sheet Number

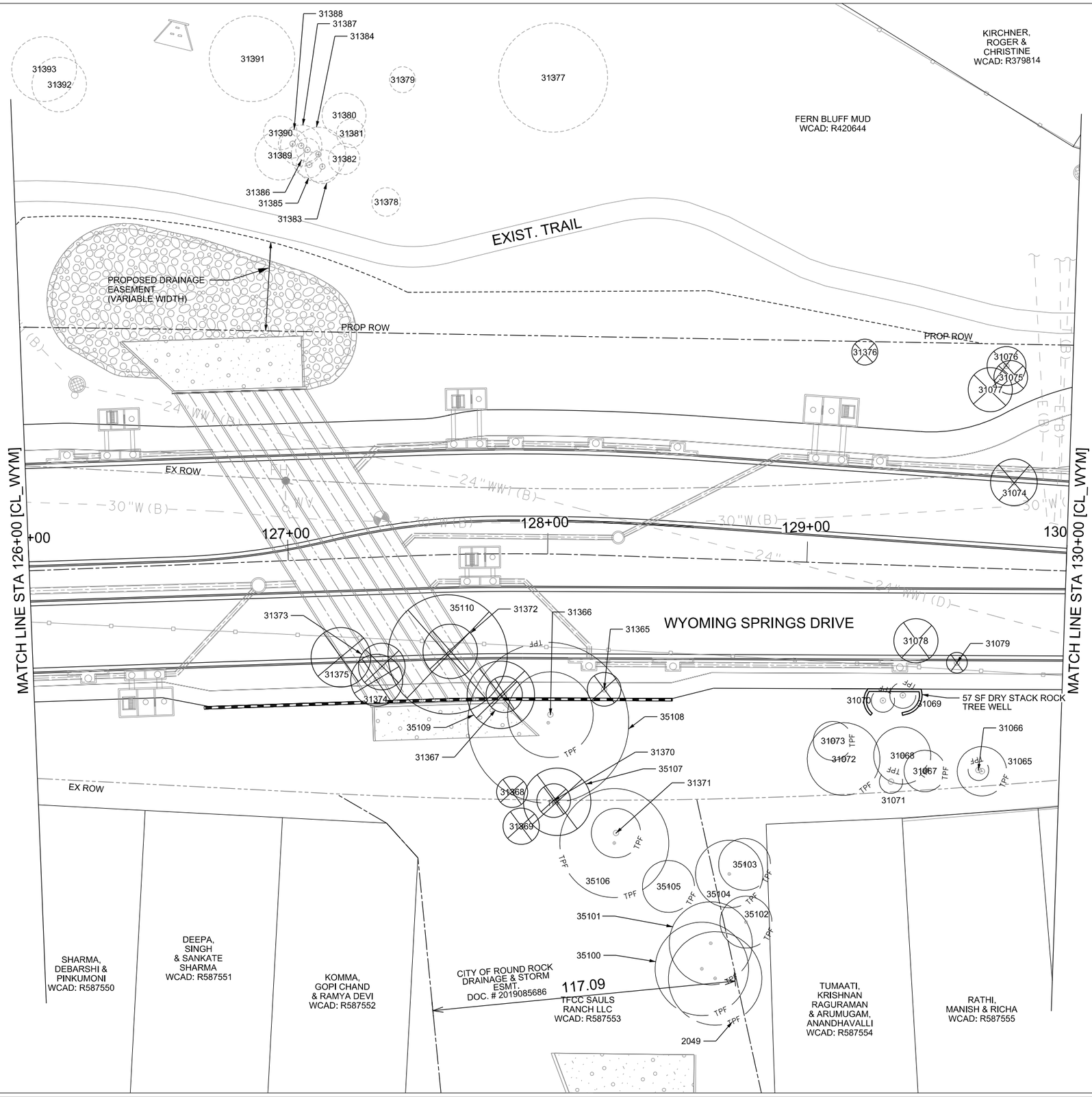

LEGEND

- TREE TO REMAIN
- TREE TO BE PROTECTED (TPF)
- TREE TO BE REMOVED
- PROPERTY LINE
- PROPOSED ROW
- EXISTING ROW
- EASEMENT
- EXISTING FEATURES
- EXISTING FENCE LINE WORK
- RETAINING WALLS
- STORM MANHOLE
- POWER POLE
- LIGHT POLE
- SIGN
- FIRE HYDRANT
- TREE WELLS

NOTES:
1. TREES SHOWN ARE SURVEYED TREES 8-IN CALIPER OR ABOVE CLASSIFIES AS PROTECTED BY CITY OF ROUND ROCK ORDINANCE. CERTAIN TREE SPECIES LARGER THAN 8-IN MAY NOT BE SHOWN IN THE PLAN.

2. REMOVAL OF SHRUBS. BRUSH AND TREES NOT SHOWN ON THIS PLAN SHALL BE CONSIDERED SUBSIDIARY TO ITEM 100 PREPARATION OF RIGHT OF WAY.

3. TREE REMOVAL SHALL BE SUBSIDIARY TO ITEM 100 PREPARING RIGHT OF WAY.

4. TREE PROTECTION FENCE IS DEPICTED AS THE CRITICAL ROOT ZONE OF EACH TREE. CONTRACTOR SHALL PLACE FENCING A MINIMUM OF 4-FT FROM THE PROPOSED BACK-OF-CURB, WHERE APPLICABLE, TO ALLOW FOR PLACEMENT OF ROADWAY SUBGRADE MATERIALS.

0 20 40 60 80

SCALE: 1"=40'

WYOMING SPRINGS
SEGMENT 1
ROUND ROCK, TX

ROUND ROCK TEXAS

halff
13620 BRANTWICK DR
BLDG C, STE 100
AUSTIN, TX 78729
(512) 777-4600
TBPELS FIRM #312

Revision No.	Date	Description

F-312 4/17/23
STATE OF TEXAS
JEFFREY L. NAGY
133255
LICENSED
PROFESSIONAL ENGINEER

100% SUBMITTAL

Project No.:	36179.002
Issued:	4/17/2023
Drawn By:	SG
Checked By:	JN
Scale:	1"=40'

Sheet Title
TREE REMOVAL AND PROTECTION PLAN (5 OF 19)

61
Sheet Number

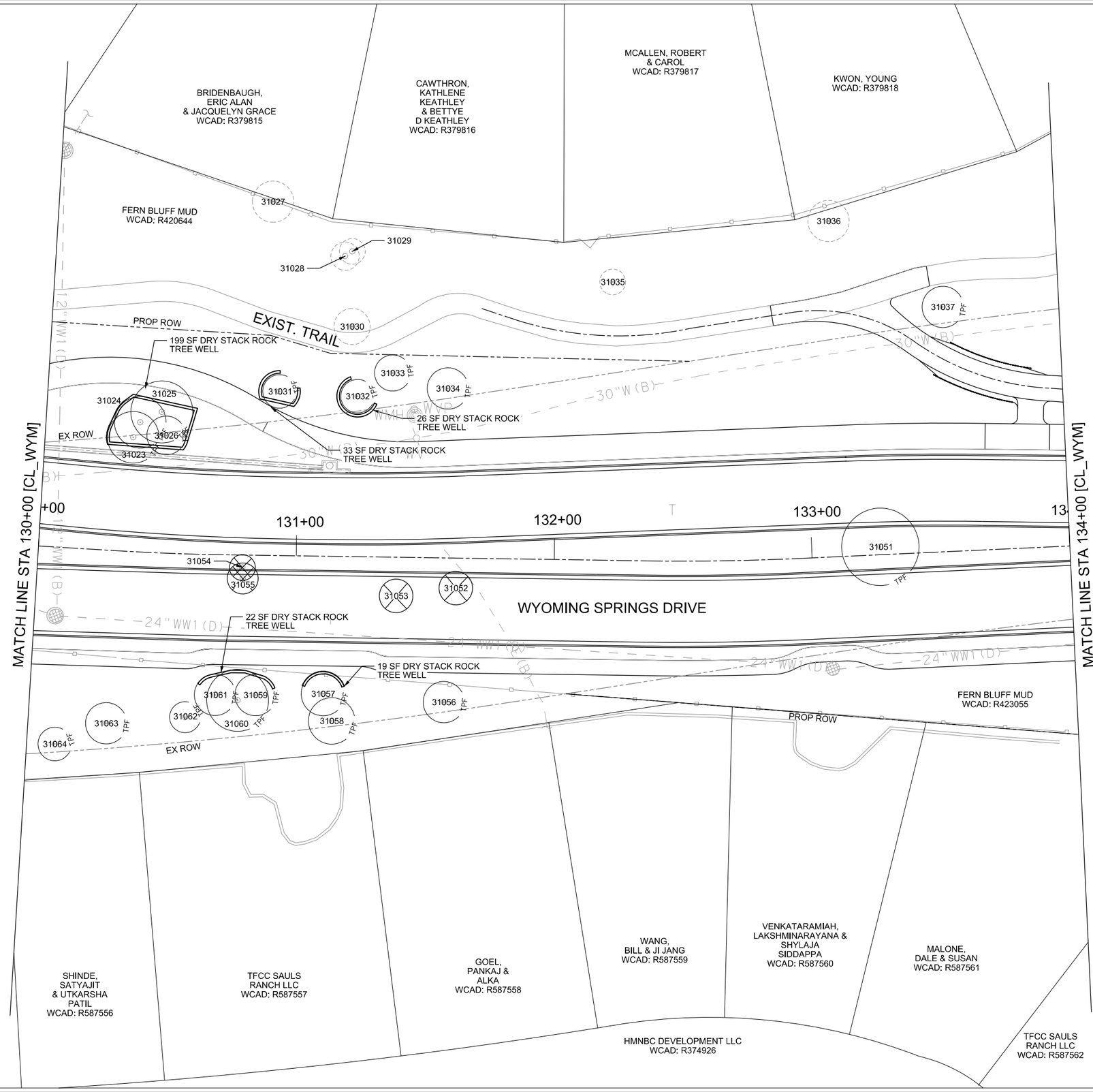

LEGEND

- TREE TO REMAIN
- TREE TO BE PROTECTED
- TREE TO BE REMOVED
- PROPERTY LINE
- PROPOSED ROW
- EXISTING ROW
- EASEMENT
- EXISTING FEATURES
- EXISTING FENCE LINE WORK
- RETAINING WALLS
- STORM MANHOLE
- POWER POLE
- LIGHT POLE
- SIGN
- FIRE HYDRANT
- TREE WELLS

NOTES:
1. TREES SHOWN ARE SURVEYED TREES 8-IN CALIPER OR ABOVE CLASSIFIES AS PROTECTED BY CITY OF ROUND ROCK ORDINANCE. CERTAIN TREE SPECIES LARGER THAN 8-IN MAY NOT BE SHOWN IN THE PLAN.

2. REMOVAL OF SHRUBS. BRUSH AND TREES NOT SHOWN ON THIS PLAN SHALL BE CONSIDERED SUBSIDIARY TO ITEM 100 PREPARATION OF RIGHT OF WAY.

3. TREE REMOVAL SHALL BE SUBSIDIARY TO ITEM 100 PREPARING RIGHT OF WAY.

4. TREE PROTECTION FENCE IS DEPICTED AS THE CRITICAL ROOT ZONE OF EACH TREE. CONTRACTOR SHALL PLACE FENCING A MINIMUM OF 4-FT FROM THE PROPOSED BACK-OF-CURB, WHERE APPLICABLE, TO ALLOW FOR PLACEMENT OF ROADWAY SUBGRADE MATERIALS.

N

0 20 40 60 80

SCALE: 1"=40'

WYOMING SPRINGS
SEGMENT 1
ROUND ROCK, TX

ROUND ROCK TEXAS

halff
13620 BRANTWICK DR
BLDG C, STE 100
AUSTIN, TX 78729
(512) 777-4600
TBPELS FIRM #312

Revision No.	Date	Description

F-312 4/5/23

STATE OF TEXAS
JEFFREY L. NAGY
133255
LICENSED
PROFESSIONAL ENGINEER

100% SUBMITTAL

Project No.:	36179.002
Issued:	4/17/2023
Drawn By:	SG
Checked By:	JN
Scale:	1"=40'

Sheet Title
TREE REMOVAL AND PROTECTION PLAN
(6 OF 19)

62
Sheet Number

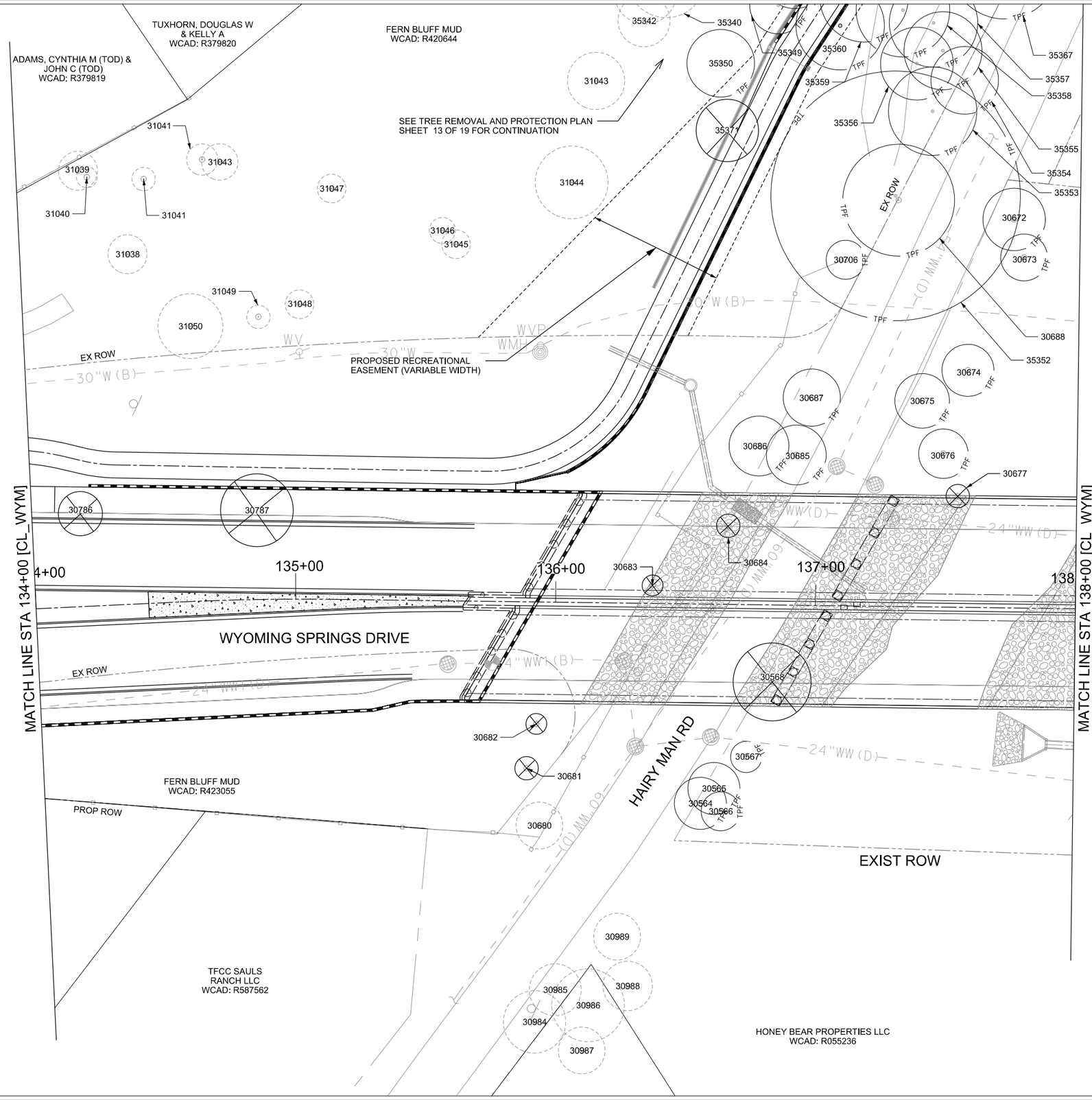

LEGEND

- TREE TO REMAIN
- TREE TO BE PROTECTED
- TREE TO BE REMOVED
- PROPERTY LINE
- PROPOSED ROW
- EXISTING ROW
- EASEMENT
- EXISTING FEATURES
- EXISTING FENCE LINE WORK
- RETAINING WALLS
- STORM MANHOLE
- POWER POLE
- LIGHT POLE
- SIGN
- FIRE HYDRANT
- TREE WELLS

NOTES:

1. TREES SHOWN ARE SURVEYED TREES 8-IN CALIPER OR ABOVE CLASSIFIES AS PROTECTED BY CITY OF ROUND ROCK ORDINANCE. CERTAIN TREE SPECIES LARGER THAN 8-IN MAY NOT BE SHOWN IN THE PLAN.

2. REMOVAL OF SHRUBS, BRUSH AND TREES NOT SHOWN ON THIS PLAN SHALL BE CONSIDERED SUBSIDIARY TO ITEM 100 PREPARATION OF RIGHT OF WAY.

3. TREE REMOVAL SHALL BE SUBSIDIARY TO ITEM 100 PREPARING RIGHT OF WAY.

4. TREE PROTECTION FENCE IS DEPICTED AS THE CRITICAL ROOT ZONE OF EACH TREE. CONTRACTOR SHALL PLACE FENCING A MINIMUM OF 4-FT FROM THE PROPOSED BACK-OF-CURB, WHERE APPLICABLE, TO ALLOW FOR PLACEMENT OF ROADWAY SUBGRADE MATERIALS.

0 20 40 60 80

SCALE: 1"=40'

WYOMING SPRINGS
SEGMENT 1
ROUND ROCK, TX

ROUND ROCK TEXAS

halff
13620 BRANTWICK DR
BLDG C, STE 100
AUSTIN, TX 78729
(512) 777-4600
TBPELS FIRM #312

Revision No.	Date	Description

4/17/23

STATE OF TEXAS
JEFFREY L NAGY
133255
LICENSED
PROFESSIONAL ENGINEER

100% SUBMITTAL

Project No.:	36179.002
Issued:	4/17/2023
Drawn By:	SG
Checked By:	JN
Scale:	1"=40'

Sheet Title
TREE REMOVAL AND PROTECTION PLAN
(7 OF 19)

63
Sheet Number

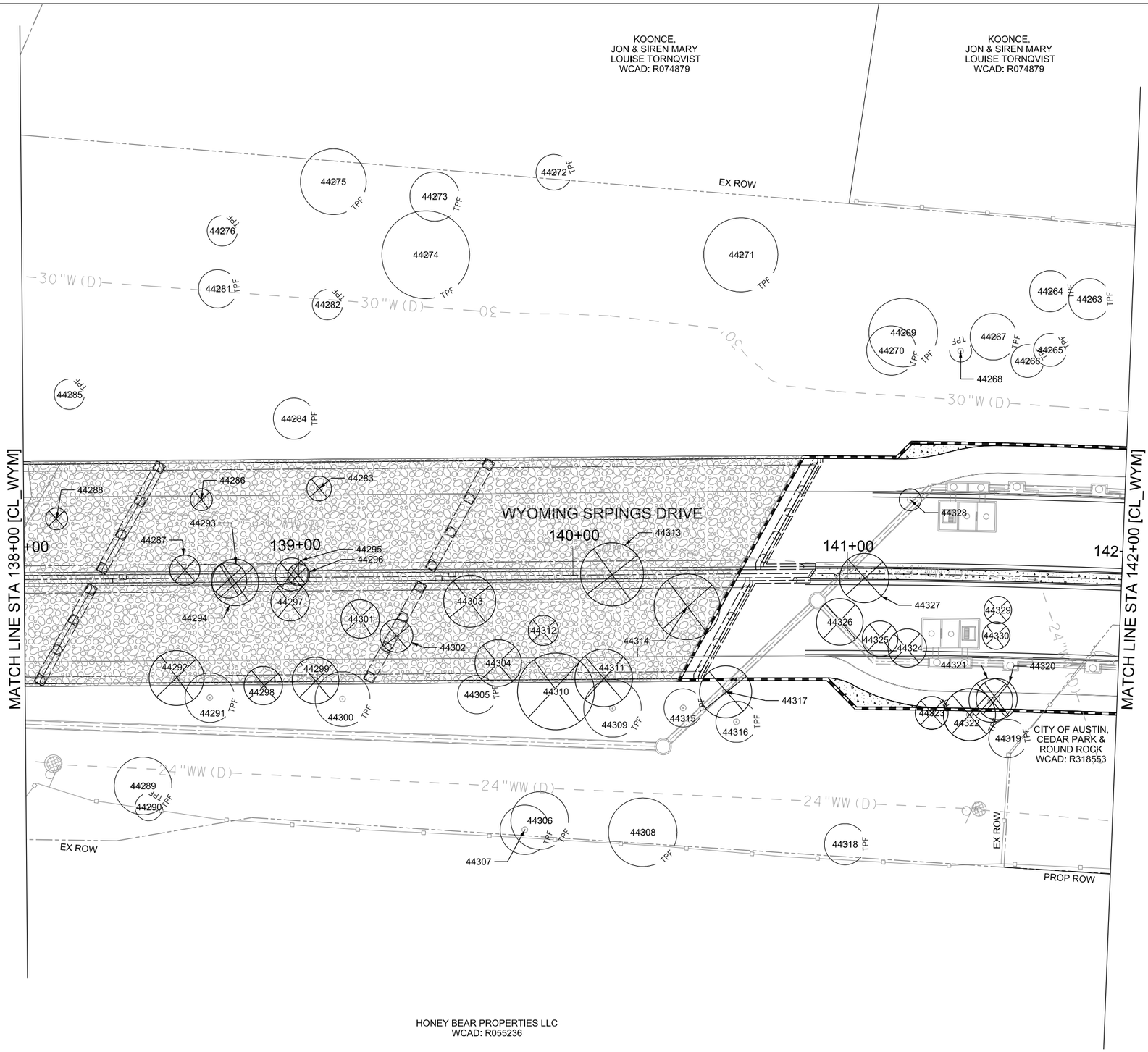

LEGEND

- TREE TO REMAIN
- TREE TO BE PROTECTED (TPF)
- TREE TO BE REMOVED
- PROPERTY LINE
- PROPOSED ROW
- EXISTING ROW
- EASEMENT
- EXISTING FEATURES
- EXISTING FENCE LINE WORK
- RETAINING WALLS
- STORM MANHOLE
- POWER POLE
- LIGHT POLE
- SIGN
- FIRE HYDRANT
- TREE WELLS

NOTES:
1. TREES SHOWN ARE SURVEYED TREES 8-IN CALIPER OR ABOVE CLASSIFIES AS PROTECTED BY CITY OF ROUND ROCK ORDINANCE. CERTAIN TREE SPECIES LARGER THAN 8-IN MAY NOT BE SHOWN IN THE PLAN.

2. REMOVAL OF SHRUBS, BRUSH AND TREES NOT SHOWN ON THIS PLAN SHALL BE CONSIDERED SUBSIDIARY TO ITEM 100 PREPARATION OF RIGHT OF WAY.

3. TREE REMOVAL SHALL BE SUBSIDIARY TO ITEM 100 PREPARING RIGHT OF WAY.

4. TREE PROTECTION FENCE IS DEPICTED AS THE CRITICAL ROOT ZONE OF EACH TREE. CONTRACTOR SHALL PLACE FENCING A MINIMUM OF 4-FT FROM THE PROPOSED BACK-OF-CURB, WHERE APPLICABLE, TO ALLOW FOR PLACEMENT OF ROADWAY SUBGRADE MATERIALS.

N

0 20 40 60 80

SCALE: 1"=40'

WYOMING SPRINGS
SEGMENT 1
ROUND ROCK, TX

ROUND ROCK TEXAS

halff
13620 BRANTWICK DR
BLDG C, STE 100
AUSTIN, TX 78729
(512) 777-4600
TBPELS FIRM #312

No.	Revision Date	Description

F-312 4/17/23
STATE OF TEXAS
JEFFREY L. NAGY
133255
LICENSED
PROFESSIONAL ENGINEER

100% SUBMITTAL

Project No.:	36179.002
Issued:	4/17/2023
Drawn By:	SG
Checked By:	JN
Scale:	1"=40'

Sheet Title
TREE REMOVAL AND PROTECTION PLAN
(8 OF 19)

64
Sheet Number

KOONCE,
JON & SIREN MARY
LOUISE TORNQVIST
WCAD: R074879

HOUSTON, RAY
WCAD: R074878

OH, JUNG MIN & JANET
ANN
WCAD: R074877

EX ROW

WYOMING SPRINGS DRIVE

MATCH LINE STA 142+00 [CL_WYM]

MATCH LINE STA 146+00 [CL_WYM]

142+00

143+00

144+00

145+00

146

44257
44256
44258
44260
44259
44262
44261
44366
44367
44365
44364
44363
44357
44356
44355
44368
44369
44376
44375
44374
44378
44377
44379
44380
44334
44347
44348
44349
44341
44342
44346
44345
44350
44351
44354
44353
44372
44370
44373
44371
44335
44343
44344
44340
44339
44352
44336
44337
44338

22 SF DRY STACK ROCK TREE WELL
50 SF DRY STACK ROCK TREE WELL
16 SF DRY STACK ROCK TREE WELL
172 SF DRY STACK ROCK TREE WELL
120 SF DRY STACK ROCK TREE WELL

30"W
30"W(B)
ARV WVP
WV
24"WW(D)

TPF
TFF

WILLIAMSON COUNTY
WCAD: R418434

FISHER, CECIL W, JR
WCAD: R055157

LEGEND

- TREE TO REMAIN
- TREE TO BE PROTECTED
- TREE TO BE REMOVED
- PROPERTY LINE
- PROPOSED ROW
- EXISTING ROW
- EASEMENT
- EXISTING FEATURES
- EXISTING FENCE LINE WORK
- RETAINING WALLS
- STORM MANHOLE
- POWER POLE
- LIGHT POLE
- SIGN
- FIRE HYDRANT
- TREE WELLS

NOTES:
1. TREES SHOWN ARE SURVEYED TREES 8-IN CALIPER OR ABOVE CLASSIFIES AS PROTECTED BY CITY OF ROUND ROCK ORDINANCE. CERTAIN TREE SPECIES LARGER THAN 8-IN MAY NOT BE SHOWN IN THE PLAN.

2. REMOVAL OF SHRUBS, BRUSH AND TREES NOT SHOWN ON THIS PLAN SHALL BE CONSIDERED SUBSIDIARY TO ITEM 100 PREPARATION OF RIGHT OF WAY.

3. TREE REMOVAL SHALL BE SUBSIDIARY TO ITEM 100 PREPARING RIGHT OF WAY.

4. TREE PROTECTION FENCE IS DEPICTED AS THE CRITICAL ROOT ZONE OF EACH TREE. CONTRACTOR SHALL PLACE FENCING A MINIMUM OF 4-FT FROM THE PROPOSED BACK-OF-CURB, WHERE APPLICABLE, TO ALLOW FOR PLACEMENT OF ROADWAY SUBGRADE MATERIALS.

N

0 20 40 60 80

SCALE: 1"=40'

WYOMING SPRINGS
SEGMENT 1
ROUND ROCK, TX

ROUND ROCK TEXAS

halff
13620 BRANTWICK DR
BLDG C, STE 100
AUSTIN, TX 78729
(512) 777-4600
TBPELS FIRM #312

No.	Revision	Date	Description

F-312 4/17/23
STATE OF TEXAS
JEFFREY L. NAGY
133255
LICENSED
PROFESSIONAL ENGINEER

100% SUBMITTAL

Project No.:	36179.002
Issued:	4/17/2023
Drawn By:	SG
Checked By:	JN
Scale:	1"=40'

Sheet Title
TREE REMOVAL AND PROTECTION PLAN
(9 OF 19)

65
Sheet Number

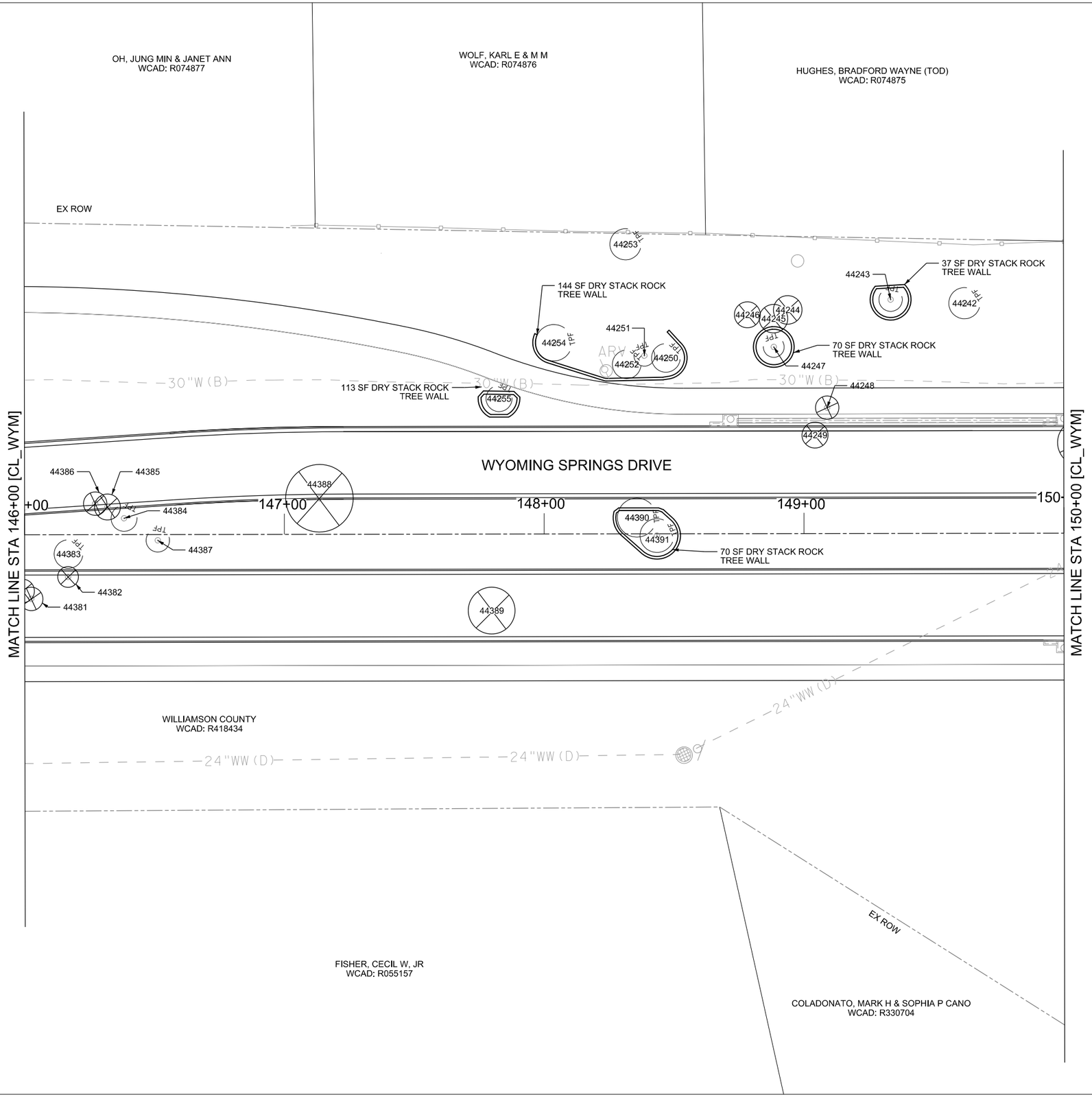

LEGEND

- TREE TO REMAIN
- TREE TO BE PROTECTED
- TREE TO BE REMOVED
- PROPERTY LINE
- PROPOSED ROW
- EXISTING ROW
- EASEMENT
- EXISTING FEATURES
- EXISTING FENCE LINE WORK
- RETAINING WALLS
- STORM MANHOLE
- POWER POLE
- LIGHT POLE
- SIGN
- FIRE HYDRANT
- TREE WELLS

NOTES:
1. TREES SHOWN ARE SURVEYED TREES 8-IN CALIPER OR ABOVE CLASSIFIES AS PROTECTED BY CITY OF ROUND ROCK ORDINANCE. CERTAIN TREE SPECIES LARGER THAN 8-IN MAY NOT BE SHOWN IN THE PLAN.

2. REMOVAL OF SHRUBS. BRUSH AND TREES NOT SHOWN ON THIS PLAN SHALL BE CONSIDERED SUBSIDIARY TO ITEM 100 PREPARATION OF RIGHT OF WAY.

3. TREE REMOVAL SHALL BE SUBSIDIARY TO ITEM 100 PREPARING RIGHT OF WAY.

4. TREE PROTECTION FENCE IS DEPICTED AS THE CRITICAL ROOT ZONE OF EACH TREE. CONTRACTOR SHALL PLACE FENCING A MINIMUM OF 4-FT FROM THE PROPOSED BACK-OF-CURB, WHERE APPLICABLE, TO ALLOW FOR PLACEMENT OF ROADWAY SUBGRADE MATERIALS.

N

0 20 40 60 80

SCALE: 1"=40'

WYOMING SPRINGS
SEGMENT 1
ROUND ROCK, TX

ROUND ROCK TEXAS

halff
13620 BRIARWICK DR
BLDG C, STE 100
AUSTIN, TX 78729
(512) 777-4600
TBPELS FIRM #312

Revision		
No.	Date	Description

STATE OF TEXAS
JEFFREY L. NAGY
133255
LICENSED
PROFESSIONAL ENGINEER
F-312 4/5/23

100% SUBMITTAL

Project No.:	36179.002
Issued:	4/17/2023
Drawn By:	SG
Checked By:	JN
Scale:	1"=40'

Sheet Title
TREE REMOVAL AND PROTECTION PLAN (10 OF 19)

66
Sheet Number

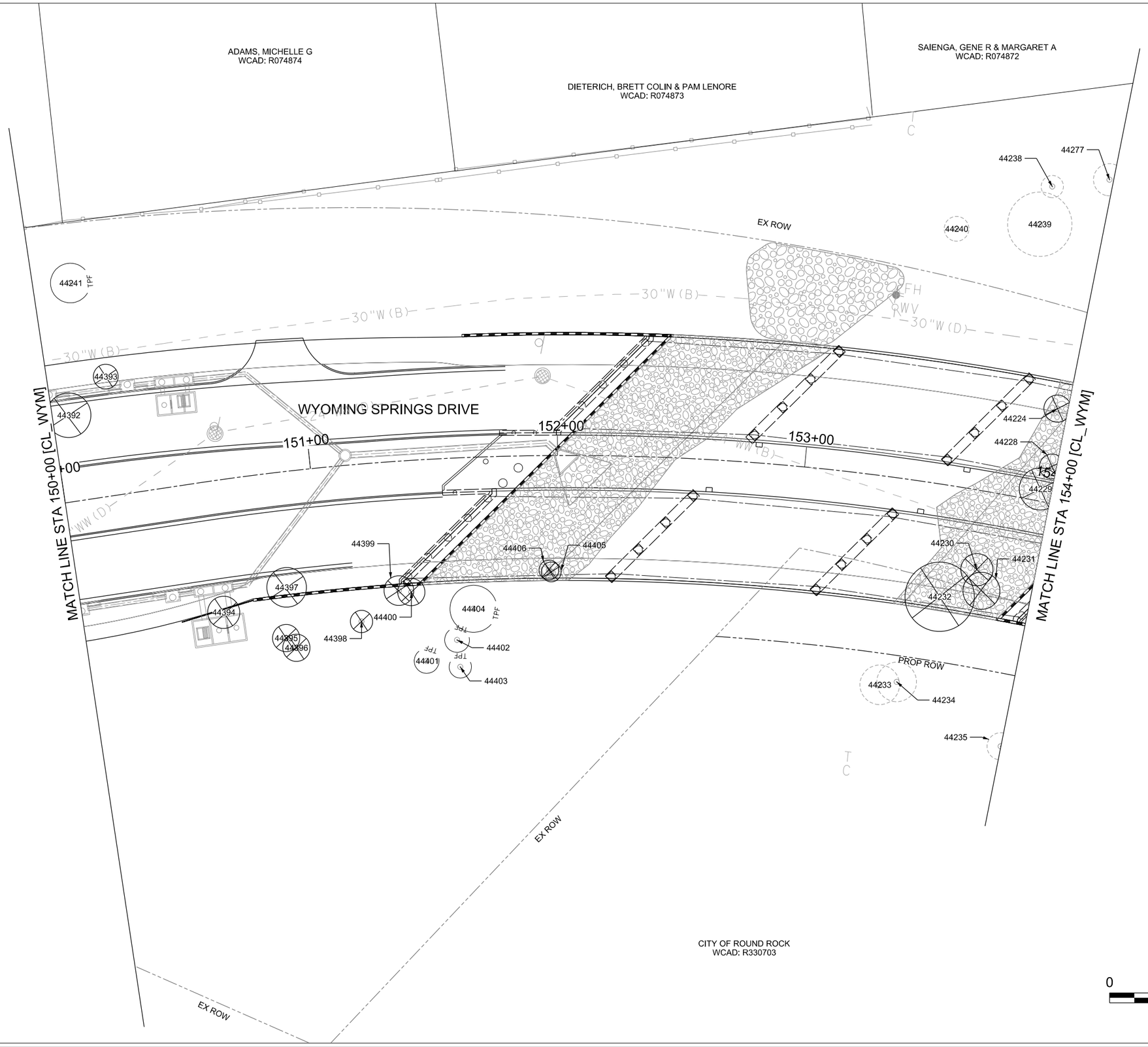

LEGEND

- TREE TO REMAIN
- TREE TO BE PROTECTED
- TREE TO BE REMOVED
- PROPERTY LINE
- PROPOSED ROW
- EXISTING ROW
- EASEMENT
- EXISTING FEATURES
- EXISTING FENCE LINE WORK
- RETAINING WALLS
- STORM MANHOLE
- POWER POLE
- LIGHT POLE
- SIGN
- FIRE HYDRANT
- TREE WELLS

NOTES:
1. TREES SHOWN ARE SURVEYED TREES 8-IN CALIPER OR ABOVE CLASSIFIES AS PROTECTED BY CITY OF ROUND ROCK ORDINANCE. CERTAIN TREE SPECIES LARGER THAN 8-IN MAY NOT BE SHOWN IN THE PLAN.

2. REMOVAL OF SHRUBS. BRUSH AND TREES NOT SHOWN ON THIS PLAN SHALL BE CONSIDERED SUBSIDIARY TO ITEM 100 PREPARATION OF RIGHT OF WAY.

3. TREE REMOVAL SHALL BE SUBSIDIARY TO ITEM 100 PREPARING RIGHT OF WAY.

4. TREE PROTECTION FENCE IS DEPICTED AS THE CRITICAL ROOT ZONE OF EACH TREE. CONTRACTOR SHALL PLACE FENCING A MINIMUM OF 4-FT FROM THE PROPOSED BACK-OF-CURB, WHERE APPLICABLE, TO ALLOW FOR PLACEMENT OF ROADWAY SUBGRADE MATERIALS.

N

0 20 40 60 80

SCALE: 1"=40'

WYOMING SPRINGS
SEGMENT 1
ROUND ROCK, TX

ROUND ROCK TEXAS

halff
13620 BRANTWICK DR
BLDG C, STE 100
AUSTIN, TX 78729
(512) 777-4600
TBPELS FIRM #312

Revision No.	Date	Description

F-312 4/17/23

STATE OF TEXAS
JEFFREY L. NAGY
133255
LICENSED
PROFESSIONAL ENGINEER

100% SUBMITTAL

Project No.:	36179.002
Issued:	4/17/2023
Drawn By:	SG
Checked By:	JN
Scale:	1"=40'

Sheet Title
TREE REMOVAL AND PROTECTION PLAN
(11 OF 19)

67
Sheet Number

SAIENGA, GENE R & MARGARET A
WCAD: R074872

MCCOY, MARK A & JACQUILINE J
WCAD: R074814

CITY OF ROUND ROCK
WCAD: R418456

MATCH LINE STA 154+00 [CL_WYM]

WYOMING SPRINGS DRIVE

SAM BASS RD

EX ROW

PROP ROW

56 SF DRY STACK ROCK TREE WALL

155+00

156+00

157+00

158+00

44+00

45+00

46+00

47+00

44218 44219 44220 44221 44222 44223 44225 44226 44227 44236 44237 44278 44279

43848 43847 43490 43850 43851 43849 43853 43852 43491 43493 43854 43855 43494 43894 43856 43857 43858 43859 43860 43861 43862 43863 43864 43865 43866 43867 43868 43869 43870 43871 43872 43873 43874 43875 43884 43885 43895 43896 43897 43900 43901 43902 43903 43460 43461 43694 43698 43699 43700 43701

CITY OF ROUND ROCK
WCAD: R330703

BEHRENS RANCH MASTER ASSOC
WCAD: R327629

LEGEND

- TREE TO REMAIN
- TREE TO BE PROTECTED (TF)
- TREE TO BE REMOVED
- PROPERTY LINE
- PROPOSED ROW
- EXISTING ROW
- EASEMENT
- EXISTING FEATURES
- EXISTING FENCE LINE WORK
- RETAINING WALLS
- STORM MANHOLE
- POWER POLE
- LIGHT POLE
- SIGN
- FIRE HYDRANT
- TREE WELLS

NOTES:

1. TREES SHOWN ARE SURVEYED TREES 8-IN CALIPER OR ABOVE CLASSIFIES AS PROTECTED BY CITY OF ROUND ROCK ORDINANCE. CERTAIN TREE SPECIES LARGER THAN 8-IN MAY NOT BE SHOWN IN THE PLAN.
2. REMOVAL OF SHRUBS, BRUSH AND TREES NOT SHOWN ON THIS PLAN SHALL BE CONSIDERED SUBSIDIARY TO ITEM 100 PREPARATION OF RIGHT OF WAY.
3. TREE REMOVAL SHALL BE SUBSIDIARY TO ITEM 100 PREPARING RIGHT OF WAY.
4. TREE PROTECTION FENCE IS DEPICTED AS THE CRITICAL ROOT ZONE OF EACH TREE. CONTRACTOR SHALL PLACE FENCING A MINIMUM OF 4-FT FROM THE PROPOSED BACK-OF-CURB, WHERE APPLICABLE, TO ALLOW FOR PLACEMENT OF ROADWAY SUBGRADE MATERIALS.

N

0 20 40 60 80

SCALE: 1"=40'

WYOMING SPRINGS
SEGMENT 1
ROUND ROCK, TX

ROUND ROCK TEXAS

halff
13620 BRANTWICK DR
BLDG C, STE 100
AUSTIN, TX 78729
(512) 777-4600
TBPELS FIRM #312

Revision No.	Date	Description

4/5/23

STATE OF TEXAS
JEFFREY L NAGY
133255
LICENSED
PROFESSIONAL ENGINEER

100% SUBMITTAL

Project No.:	36179.002
Issued:	4/17/2023
Drawn By:	SG
Checked By:	JN
Scale:	1"=40'

Sheet Title
TREE REMOVAL AND PROTECTION PLAN (12 OF 19)

68
Sheet Number

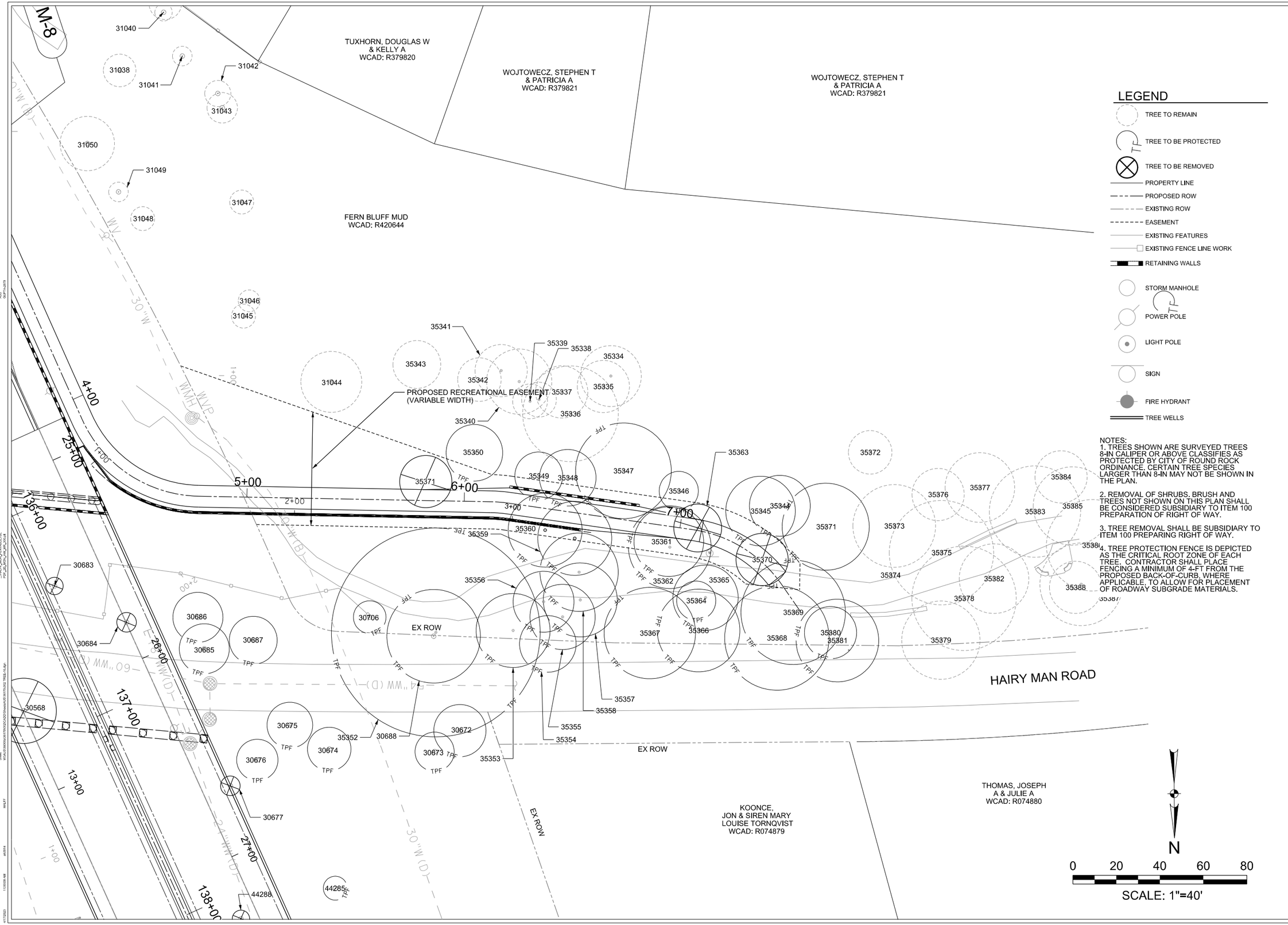

LEGEND

- TREE TO REMAIN
- TREE TO BE PROTECTED
- TREE TO BE REMOVED
- PROPERTY LINE
- PROPOSED ROW
- EXISTING ROW
- EASEMENT
- EXISTING FEATURES
- EXISTING FENCE LINE WORK
- RETAINING WALLS
- STORM MANHOLE
- POWER POLE
- LIGHT POLE
- SIGN
- FIRE HYDRANT
- TREE WELLS

NOTES:
1. TREES SHOWN ARE SURVEYED TREES 8-IN CALIPER OR ABOVE CLASSIFIES AS PROTECTED BY CITY OF ROUND ROCK ORDINANCE. CERTAIN TREE SPECIES LARGER THAN 8-IN MAY NOT BE SHOWN IN THE PLAN.

2. REMOVAL OF SHRUBS, BRUSH AND TREES NOT SHOWN ON THIS PLAN SHALL BE CONSIDERED SUBSIDIARY TO ITEM 100 PREPARATION OF RIGHT OF WAY.

3. TREE REMOVAL SHALL BE SUBSIDIARY TO ITEM 100 PREPARING RIGHT OF WAY.

4. TREE PROTECTION FENCE IS DEPICTED AS THE CRITICAL ROOT ZONE OF EACH TREE. CONTRACTOR SHALL PLACE FENCING A MINIMUM OF 4-FT FROM THE PROPOSED BACK-OF-CURB, WHERE APPLICABLE, TO ALLOW FOR PLACEMENT OF ROADWAY SUBGRADE MATERIALS.

WYOMING SPRINGS
SEGMENT 1
ROUND ROCK, TX

ROUND ROCK TEXAS

halff
13620 BRANTWICK DR
BLDG C, STE 100
AUSTIN, TX 78729
(512) 777-4600
TBPELS FIRM #312

Revision No.	Date	Description

F-312 4/17/23
STATE OF TEXAS
JEFFREY L. NAGY
133255
LICENSED PROFESSIONAL ENGINEER

100% SUBMITTAL

Project No.:	36179.002
Issued:	4/17/2023
Drawn By:	SG
Checked By:	JN
Scale:	1"=40'

Sheet Title
TREE REMOVAL AND PROTECTION PLAN (13 OF 19)

69
Sheet Number

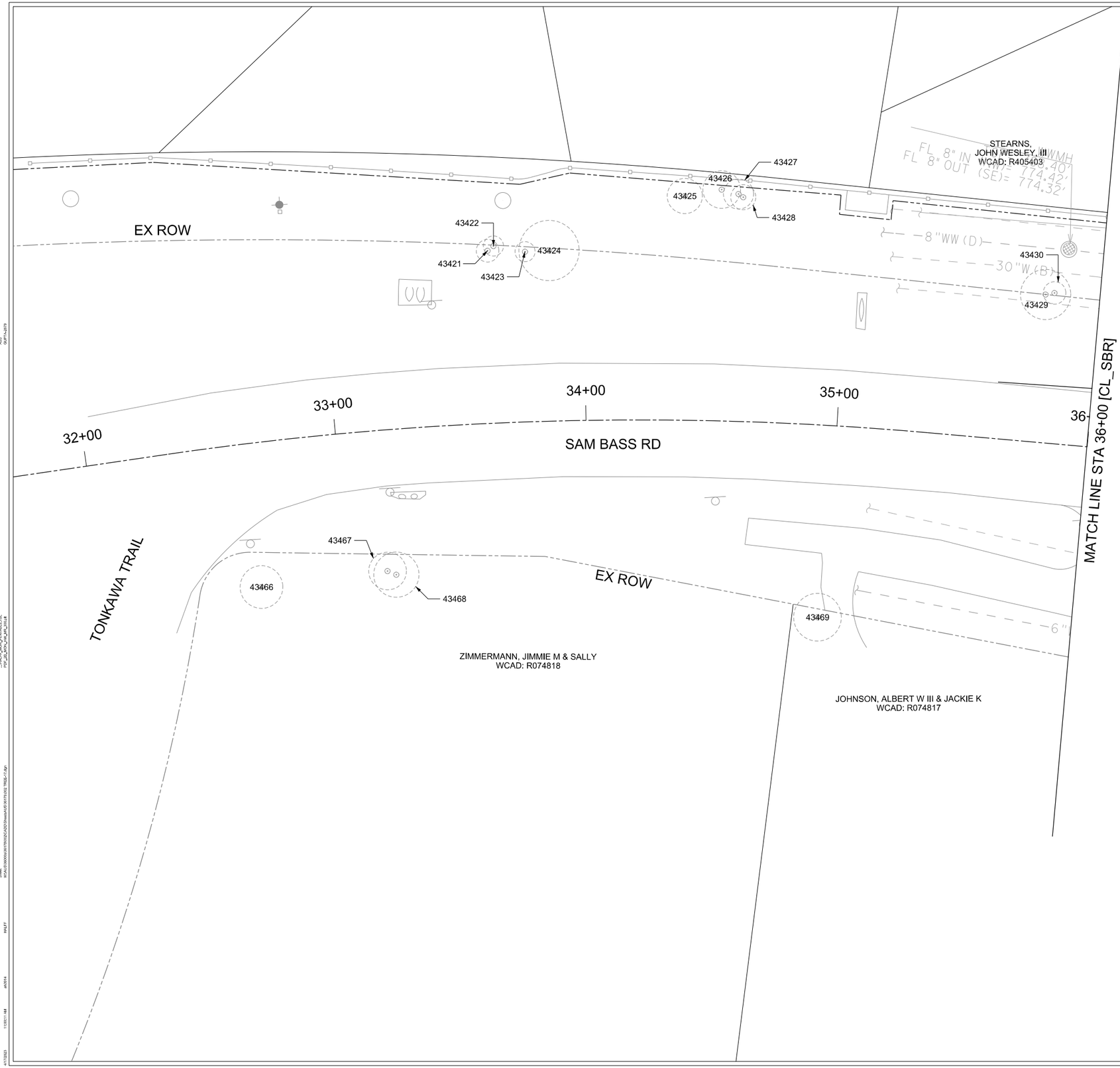

LEGEND

- TREE TO REMAIN
- TREE TO BE PROTECTED (TP)
- TREE TO BE REMOVED
- PROPERTY LINE
- PROPOSED ROW
- EXISTING ROW
- EASEMENT
- EXISTING FEATURES
- EXISTING FENCE LINE WORK
- RETAINING WALLS
- STORM MANHOLE
- POWER POLE (TP)
- LIGHT POLE
- SIGN
- FIRE HYDRANT
- TREE WELLS

NOTES:
1. TREES SHOWN ARE SURVEYED TREES 8-IN CALIPER OR ABOVE CLASSIFIES AS PROTECTED BY CITY OF ROUND ROCK ORDINANCE. CERTAIN TREE SPECIES LARGER THAN 8-IN MAY NOT BE SHOWN IN THE PLAN.

2. REMOVAL OF SHRUBS, BRUSH AND TREES NOT SHOWN ON THIS PLAN SHALL BE CONSIDERED SUBSIDIARY TO ITEM 100 PREPARATION OF RIGHT OF WAY.

3. TREE REMOVAL SHALL BE SUBSIDIARY TO ITEM 100 PREPARING RIGHT OF WAY.

4. TREE PROTECTION FENCE IS DEPICTED AS THE CRITICAL ROOT ZONE OF EACH TREE. CONTRACTOR SHALL PLACE FENCING A MINIMUM OF 4-FT FROM THE PROPOSED BACK-OF-CURB, WHERE APPLICABLE, TO ALLOW FOR PLACEMENT OF ROADWAY SUBGRADE MATERIALS.

N

0 20 40 60 80

SCALE: 1"=40'

WYOMING SPRINGS
SEGMENT 1
ROUND ROCK, TX

ROUND ROCK TEXAS

halff
13620 BRANTWICK DR
BLDG C, STE 100
AUSTIN, TX 78729
(512) 777-4600
TBPELS FIRM #312

Revision No.	Date	Description

F-312 4/5/23
STATE OF TEXAS
JEFFREY L. NAGY
133255
LICENSED
PROFESSIONAL ENGINEER

100% SUBMITTAL

Project No.:	36179.002
Issued:	4/17/2023
Drawn By:	SG
Checked By:	JN
Scale:	1"=40'

Sheet Title
TREE REMOVAL AND PROTECTION PLAN
(14 OF 19)

70
Sheet Number

UNAVAILABLE
WCAD: R405405

STEARNS,
JOHN WESLEY, III
WCAD: R405403

MOORE, LEONARD N
& THAIS D BASS MOORE
WCAD: R405404

KENNEDY,
CATHERINE S
WCAD: R405407

STRACHAN, BRIAN A
WCAD: R405408

JARVIS, JOHN M III
& SARAH A
WCAD: R405409

43438 43437 43435 43436 43434 43439 43440 43446 43448 43449 43447 43455 43431 43433 43432 43442 43443 43441 43444 43445 43451 43450 43452 43453 43454

EX ROW

MATCH LINE STA 36+00 [CL_SBR]

37+00 38+00 39+00 40+

MATCH LINE STA 40+00 [CL_SBR]

SAM BASS RD

43471 43470 43473 43472 43474 43475 43476 43477 43478 43480 43481 43483 43482 43479

EX ROW

JOHNSON, ALBERT W III & JACKIE K
WCAD: R074817

ANDERSON, BRIAN HERBERT
WCAD: R074816

FALLON, KATHLEEN MARY
WCAD: R074815

LEGEND

- TREE TO REMAIN
- TREE TO BE PROTECTED
- TREE TO BE REMOVED
- PROPERTY LINE
- PROPOSED ROW
- EXISTING ROW
- EASEMENT
- EXISTING FEATURES
- EXISTING FENCE LINE WORK
- RETAINING WALLS
- STORM MANHOLE
- POWER POLE
- LIGHT POLE
- SIGN
- FIRE HYDRANT
- TREE WELLS

NOTES:
1. TREES SHOWN ARE SURVEYED TREES 8-IN CALIPER OR ABOVE CLASSIFIES AS PROTECTED BY CITY OF ROUND ROCK ORDINANCE. CERTAIN TREE SPECIES LARGER THAN 8-IN MAY NOT BE SHOWN IN THE PLAN.

2. REMOVAL OF SHRUBS, BRUSH AND TREES NOT SHOWN ON THIS PLAN SHALL BE CONSIDERED SUBSIDIARY TO ITEM 100 PREPARATION OF RIGHT OF WAY.

3. TREE REMOVAL SHALL BE SUBSIDIARY TO ITEM 100 PREPARING RIGHT OF WAY.

4. TREE PROTECTION FENCE IS DEPICTED AS THE CRITICAL ROOT ZONE OF EACH TREE. CONTRACTOR SHALL PLACE FENCING A MINIMUM OF 4-FT FROM THE PROPOSED BACK-OF-CURB, WHERE APPLICABLE, TO ALLOW FOR PLACEMENT OF ROADWAY SUBGRADE MATERIALS.

N

0 20 40 60 80

SCALE: 1"=40'

WYOMING SPRINGS
SEGMENT 1
ROUND ROCK, TX

ROUND ROCK
TEXAS

halff
13620 BRANTWICK DR
BLDG C, STE 100
AUSTIN, TX 78729
(512) 777-4600
TBPELS FIRM #312

Revision No.	Date	Description

F-312 4/5/23
STATE OF TEXAS
JEFFREY L. NAGY
133255
LICENSED
PROFESSIONAL ENGINEER

100% SUBMITTAL

Project No.:	36179.002
Issued:	4/17/2023
Drawn By:	SG
Checked By:	JN
Scale:	1"=40'

Sheet Title
TREE REMOVAL AND PROTECTION PLAN (15 OF 19)

71
Sheet Number

KAD, SATISH D &
ELENA A FROLOVA SPILLER
WCAD: R405411

JARVIS, JOHN M III
& SARAH A
WCAD: R405409

STRAUSS DAVID
& KAREN
WCAD: R405410

KENNEDY, BRANDON CRAIG & MINDY NICOLE
WCAD: R405418

SRIKRISHNAN,
YOGESHWAR
& KOKILA SAIRAMAN
WCAD: R405419

WWMH
TOP= 784.75'
FL 8" IN (NW)= 771.49'
FL 8" OUT (SE)= 771.35'

EX ROW

43457
43458
43456
43459
43460

MATCH LINE STA 40+00 [CL_SBR]

MATCH LINE STA 44+00 [CL_SBR]

40+00
41+00
42+00
43+00
44+

SAM BASS RD

43484
43485
43486
43487
43488
43489
43848

EX ROW

MCCOY, MARK A & JACQULINE J
WCAD: R074814

CITY OF ROUND ROCK
WCAD: R418456

LEGEND

- TREE TO REMAIN
- TREE TO BE PROTECTED
- TREE TO BE REMOVED
- PROPERTY LINE
- PROPOSED ROW
- EXISTING ROW
- EASEMENT
- EXISTING FEATURES
- EXISTING FENCE LINE WORK
- RETAINING WALLS
- STORM MANHOLE
- POWER POLE
- LIGHT POLE
- SIGN
- FIRE HYDRANT
- TREE WELLS

NOTES:
1. TREES SHOWN ARE SURVEYED TREES 8-IN CALIPER OR ABOVE CLASSIFIES AS PROTECTED BY CITY OF ROUND ROCK ORDINANCE. CERTAIN TREE SPECIES LARGER THAN 8-IN MAY NOT BE SHOWN IN THE PLAN.

2. REMOVAL OF SHRUBS, BRUSH AND TREES NOT SHOWN ON THIS PLAN SHALL BE CONSIDERED SUBSIDIARY TO ITEM 100 PREPARATION OF RIGHT OF WAY.

3. TREE REMOVAL SHALL BE SUBSIDIARY TO ITEM 100 PREPARING RIGHT OF WAY.

4. TREE PROTECTION FENCE IS DEPICTED AS THE CRITICAL ROOT ZONE OF EACH TREE. CONTRACTOR SHALL PLACE FENCING A MINIMUM OF 4-FT FROM THE PROPOSED BACK-OF-CURB, WHERE APPLICABLE, TO ALLOW FOR PLACEMENT OF ROADWAY SUBGRADE MATERIALS.

N

0 20 40 60 80

SCALE: 1"=40'

WYOMING SPRINGS
SEGMENT 1
ROUND ROCK, TX

ROUND ROCK
TEXAS

halff
13620 BRANTWICK DR
BLDG C, STE 100
AUSTIN, TX 78729
(512) 777-4600
TBPELS FIRM #312

Revision No.	Date	Description

F-312 4/5/23
STATE OF TEXAS
JEFFREY L NAGY
133255
LICENSED
PROFESSIONAL ENGINEER

100% SUBMITTAL

Project No.:	36179.002
Issued:	4/17/2023
Drawn By:	SG
Checked By:	JN
Scale:	1"=40'

Sheet Title
TREE REMOVAL AND PROTECTION PLAN
(16 OF 19)

72
Sheet Number

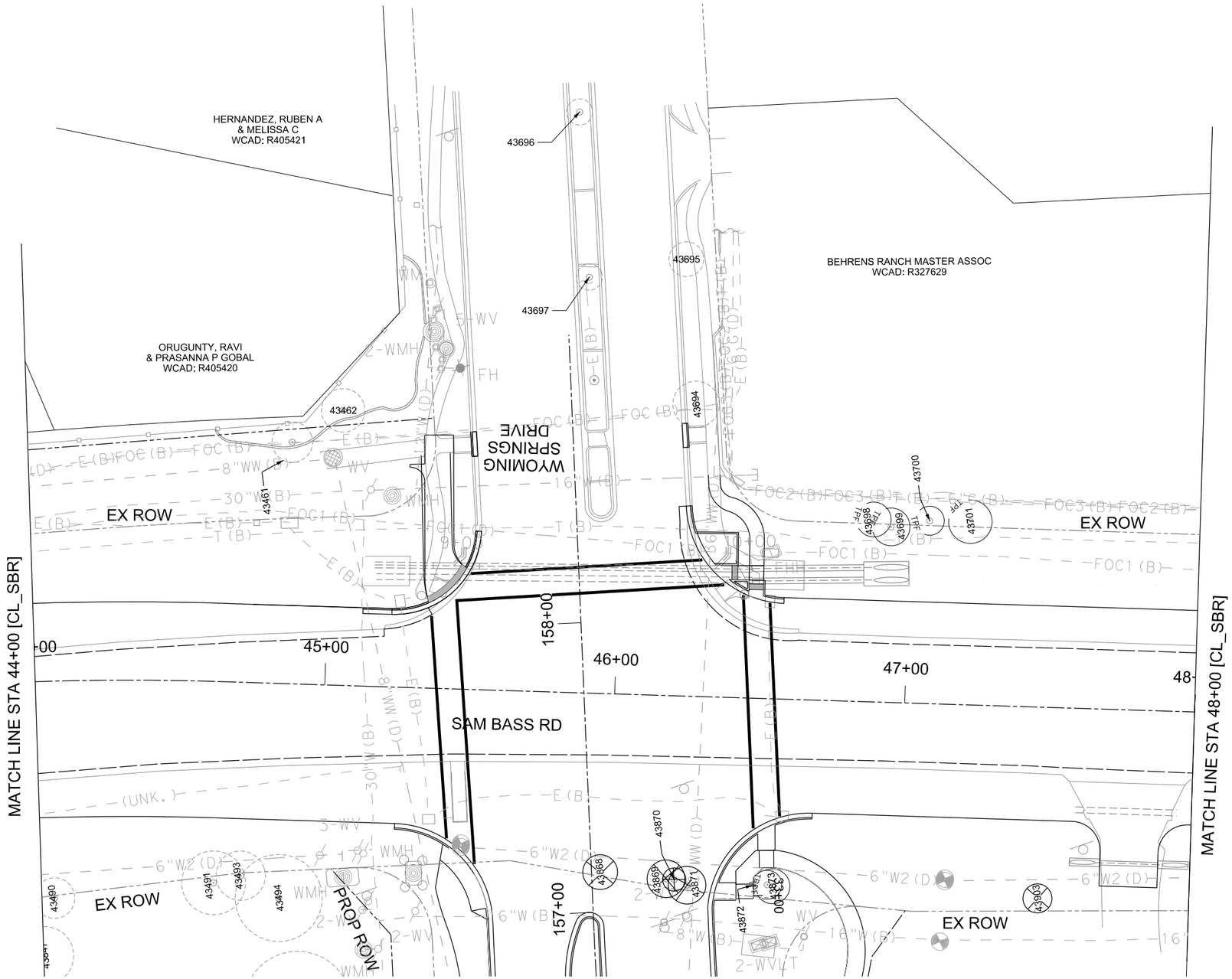

LEGEND

- TREE TO REMAIN
- TREE TO BE PROTECTED
- TREE TO BE REMOVED
- PROPERTY LINE
- PROPOSED ROW
- EXISTING ROW
- EASEMENT
- EXISTING FEATURES
- EXISTING FENCE LINE WORK
- RETAINING WALLS
- STORM MANHOLE
- POWER POLE
- LIGHT POLE
- SIGN
- FIRE HYDRANT
- TREE WELLS

NOTES:
1. TREES SHOWN ARE SURVEYED TREES 8-IN CALIPER OR ABOVE CLASSIFIES AS PROTECTED BY CITY OF ROUND ROCK ORDINANCE. CERTAIN TREE SPECIES LARGER THAN 8-IN MAY NOT BE SHOWN IN THE PLAN.

2. REMOVAL OF SHRUBS, BRUSH AND TREES NOT SHOWN ON THIS PLAN SHALL BE CONSIDERED SUBSIDIARY TO ITEM 100 PREPARATION OF RIGHT OF WAY.

3. TREE REMOVAL SHALL BE SUBSIDIARY TO ITEM 100 PREPARING RIGHT OF WAY.

4. TREE PROTECTION FENCE IS DEPICTED AS THE CRITICAL ROOT ZONE OF EACH TREE. CONTRACTOR SHALL PLACE FENCING A MINIMUM OF 4-FT FROM THE PROPOSED BACK-OF-CURB, WHERE APPLICABLE, TO ALLOW FOR PLACEMENT OF ROADWAY SUBGRADE MATERIALS.

N

0 20 40 60 80

SCALE: 1"=40'

WYOMING SPRINGS
SEGMENT 1
ROUND ROCK, TX

ROUND ROCK TEXAS

halff
13620 BRANTWICK DR
BLDG C, STE 100
AUSTIN, TX 78729
(512) 777-4600
TBPELS FIRM #312

Revision No.	Date	Description

STATE OF TEXAS
JEFFREY L NAGY
133255
LICENSED
PROFESSIONAL ENGINEER
4/5/23

100% SUBMITTAL

Project No.:	36179.002
Issued:	4/17/2023
Drawn By:	SG
Checked By:	JN
Scale:	1"=40'

Sheet Title
TREE REMOVAL AND PROTECTION PLAN (17 OF 19)

73
Sheet Number

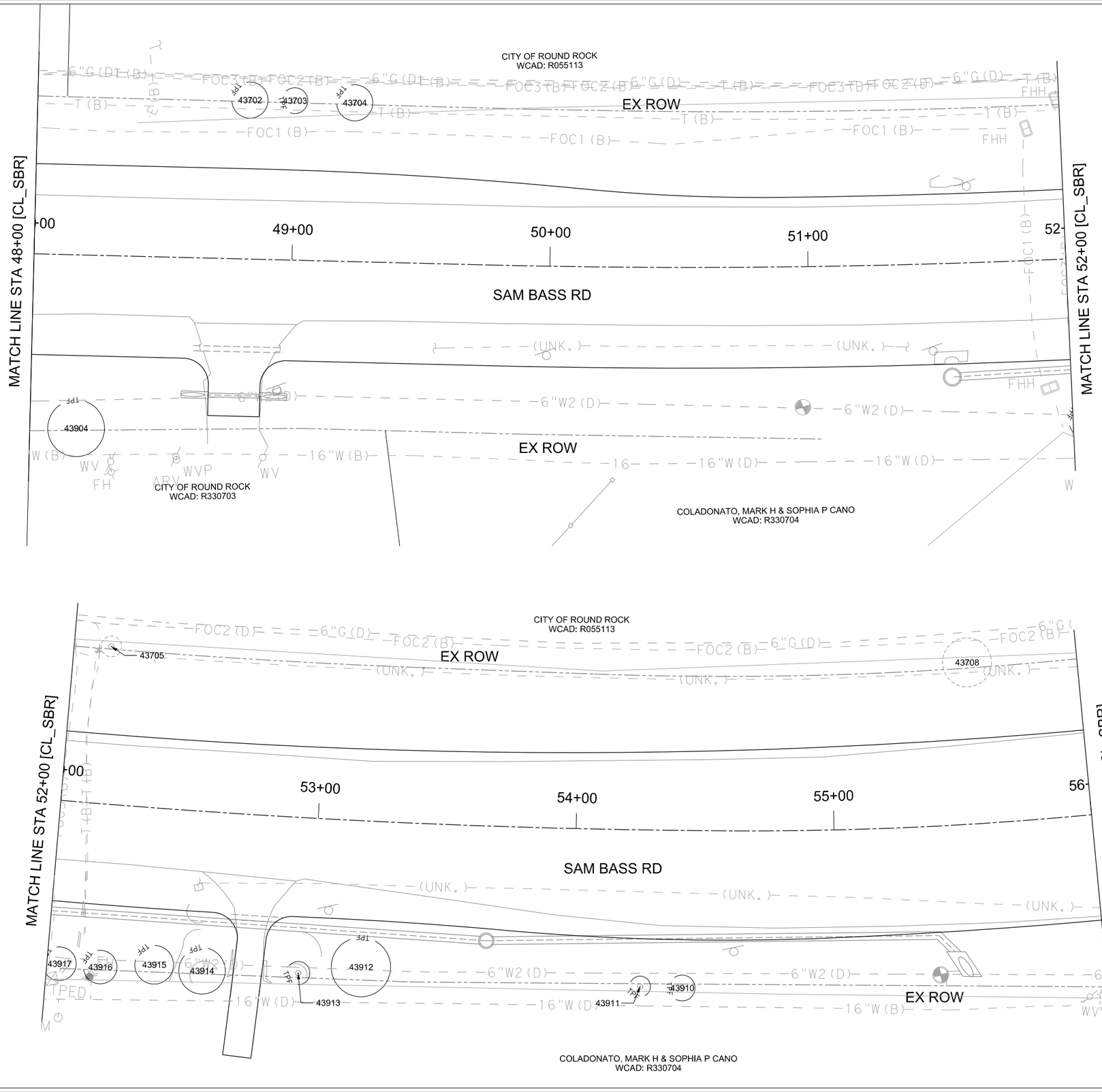

0 20 40 60 80

SCALE: 1"=40'

LEGEND

- TREE TO REMAIN
- TREE TO BE PROTECTED
- TREE TO BE REMOVED
- PROPERTY LINE
- PROPOSED ROW
- EXISTING ROW
- EASEMENT
- EXISTING FENCE LINE WORK
- RETAINING WALLS
- STORM MANHOLE
- POWER POLE
- LIGHT POLE
- SIGN
- FIRE HYDRANT
- TREE WELLS

NOTES:
1. TREES SHOWN ARE SURVEYED TREES 8-IN CALIPER OR ABOVE CLASSIFIES AS PROTECTED BY CITY OF ROUND ROCK ORDINANCE. CERTAIN TREE SPECIES LARGER THAN 8-IN MAY NOT BE SHOWN IN THE PLAN.

2. REMOVAL OF SHRUBS. BRUSH AND TREES NOT SHOWN ON THIS PLAN SHALL BE CONSIDERED SUBSIDIARY TO ITEM 100 PREPARATION OF RIGHT OF WAY.

3. TREE REMOVAL SHALL BE SUBSIDIARY TO ITEM 100 PREPARING RIGHT OF WAY.

4. TREE PROTECTION FENCE IS DEPICTED AS THE CRITICAL ROOT ZONE OF EACH TREE. CONTRACTOR SHALL PLACE FENCING A MINIMUM OF 4-FT FROM THE PROPOSED BACK-OF-CURB, WHERE APPLICABLE, TO ALLOW FOR PLACEMENT OF ROADWAY SUBGRADE MATERIALS.

WYOMING SPRINGS
SEGMENT 1
ROUND ROCK, TX

ROUND ROCK TEXAS

halff
13620 BRANTWICK DR
BLDG C, STE 100
AUSTIN, TX 78729
(512) 777-4600
TBPELS FIRM #312

Revision No.	Date	Description

F-312 4/17/23
STATE OF TEXAS
JEFFREY L. NAGY
133255
LICENSED
PROFESSIONAL ENGINEER

100% SUBMITTAL

Project No.:	36179.002
Issued:	4/17/2023
Drawn By:	SG
Checked By:	JN
Scale:	1"=40'

Sheet Title
TREE REMOVAL AND PROTECTION PLAN (18 OF 19)

74
Sheet Number

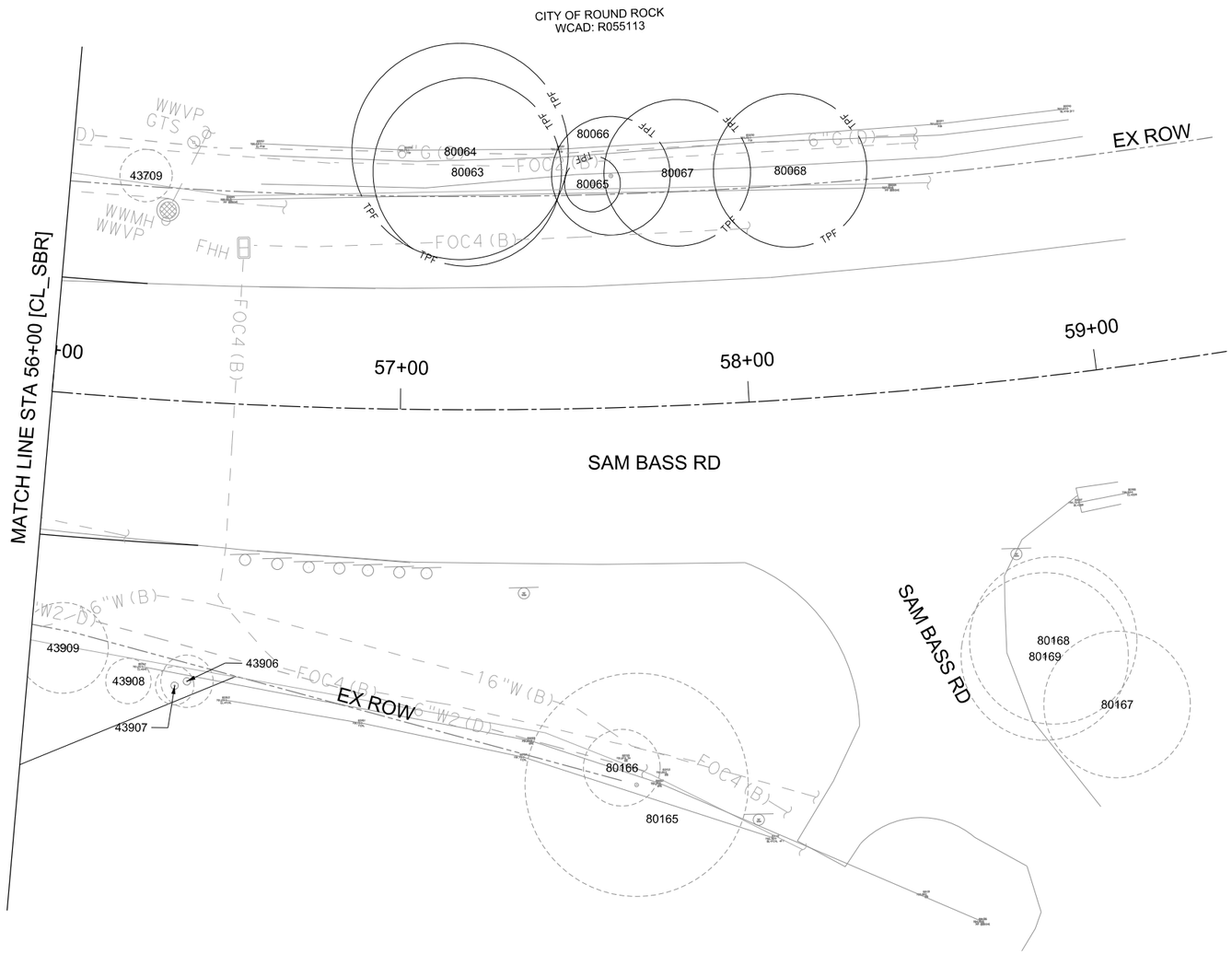

LEGEND

- TREE TO REMAIN
- TREE TO BE PROTECTED
- TREE TO BE REMOVED
- PROPERTY LINE
- PROPOSED ROW
- EXISTING ROW
- EASEMENT
- EXISTING FEATURES
- EXISTING FENCE LINE WORK
- RETAINING WALLS
- STORM MANHOLE
- POWER POLE
- LIGHT POLE
- SIGN
- FIRE HYDRANT
- TREE WELLS

NOTES:
1. TREES SHOWN ARE SURVEYED TREES 8-IN CALIPER OR ABOVE CLASSIFIES AS PROTECTED BY CITY OF ROUND ROCK ORDINANCE. CERTAIN TREE SPECIES LARGER THAN 8-IN MAY NOT BE SHOWN IN THE PLAN.

2. REMOVAL OF SHRUBS. BRUSH AND TREES NOT SHOWN ON THIS PLAN SHALL BE CONSIDERED SUBSIDIARY TO ITEM 100 PREPARATION OF RIGHT OF WAY.

3. TREE REMOVAL SHALL BE SUBSIDIARY TO ITEM 100 PREPARING RIGHT OF WAY.

4. TREE PROTECTION FENCE IS DEPICTED AS THE CRITICAL ROOT ZONE OF EACH TREE. CONTRACTOR SHALL PLACE FENCING A MINIMUM OF 4-FT FROM THE PROPOSED BACK-OF-CURB, WHERE APPLICABLE, TO ALLOW FOR PLACEMENT OF ROADWAY SUBGRADE MATERIALS.

N

0 20 40 60 80

SCALE: 1"=40'

WYOMING SPRINGS
SEGMENT 1
ROUND ROCK, TX

ROUND ROCK TEXAS

halff
13620 BRANTWICK DR
BLDG C, STE 100
AUSTIN, TX 78729
(512) 777-4600
TBPELS FIRM #312

Revision No.	Date	Description

F-312 4/17/23
STATE OF TEXAS
JEFFREY L. NAGY
133255
LICENSED
PROFESSIONAL ENGINEER

100% SUBMITTAL

Project No.:	36179.002
Issued:	4/17/2023
Drawn By:	SG
Checked By:	JN
Scale:	1"=40'

Sheet Title
TREE REMOVAL AND PROTECTION PLAN (19 OF 19)

75
Sheet Number

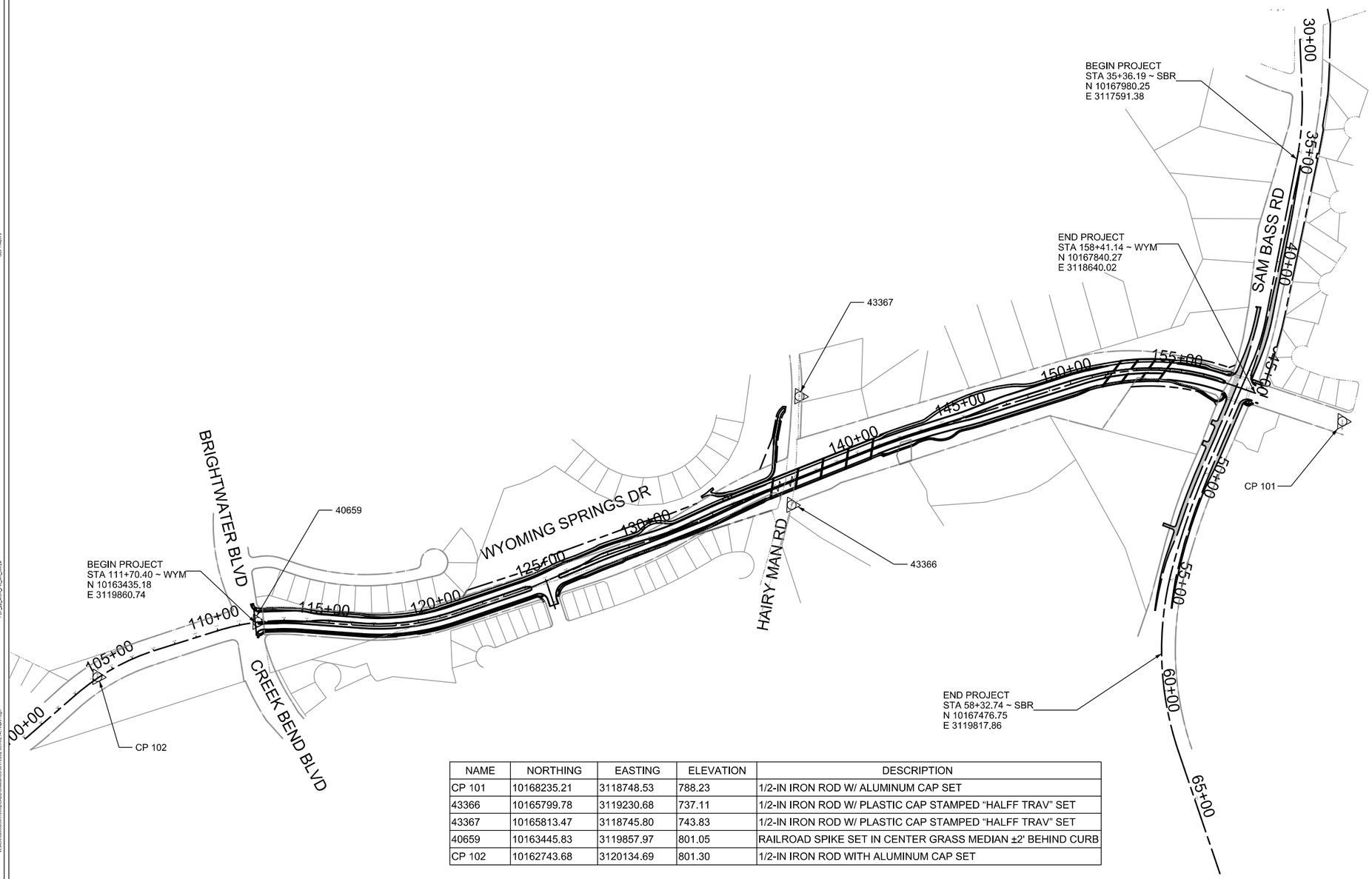

NAME	NORTHING	EASTING	ELEVATION	DESCRIPTION
CP 101	10168235.21	3118748.53	788.23	1/2-IN IRON ROD W/ ALUMINUM CAP SET
43366	10165799.78	3119230.68	737.11	1/2-IN IRON ROD W/ PLASTIC CAP STAMPED “HALFF TRAV” SET
43367	10165813.47	3118745.80	743.83	1/2-IN IRON ROD W/ PLASTIC CAP STAMPED “HALFF TRAV” SET
40659	10163445.83	3119857.97	801.05	RAILROAD SPIKE SET IN CENTER GRASS MEDIAN ±2' BEHIND CURB
CP 102	10162743.68	3120134.69	801.30	1/2-IN IRON ROD WITH ALUMINUM CAP SET

N

0 250 500 750 1000

SCALE: 1"=500'

LEGEND

- EXISTING ROW
- PROPOSED ROW
- PROPERTY LINES
- CONTROL POINT

NOTES:

1. BASIS OF BEARINGS IS THE TEXAS COORDINATE SYSTEM OF 1983, CENTRAL ZONE 4203 (NAD83/2011). ALL COORDINATES SHOWN HEREON ARE SURFACE AND MAY BE CONVERTED TO GRID BY DIVIDING BY THE SURFACE ADJUSTMENT FACTOR OF 1.00012. U.S. SURVEY FEET.

2. ELEVATIONS ARE BASED ON THE NORTH AMERICAN VERTICAL DATUM 88(NAV88), GEOID 12B.

3. FIELD SURVEY WAS CONCLUDED IN OCTOBER 2019.

4. SEE HORIZONTAL DATA SHEET FOR MORE INFORMATION.

WYOMING SPRINGS
SEGMENT 1
ROUND ROCK, TX

ROUND ROCK TEXAS

halff
13620 BRANTWICK DR
BLDG C, STE 100
AUSTIN, TX 78729
(512) 777-4600
TBPELS FIRM #312

Revision No.	Date	Description
.	.	.

STATE OF TEXAS
REGISTERED
PAUL L. EASLEY
4432
PROFESSIONAL
LAND SURVEYOR

04/05/2023

100% SUBMITTAL

Project No.:	36179.002
Issued:	3/23/2023
Drawn By:	SG
Checked By:	PE
Scale:	1"=500'

Sheet Title

SURVEY CONTROL PLAN

76
Sheet Number

Beginning chain CL_WYM description
==========

Point WYM01 N 10,162,434.7216 E 3,120,424.7163 Sta 100+00.00

Course from WYM01 to PC CL_WYM1 N 43° 37' 45.9588" W Dist 297.1228

Curve Data

Curve CL_WYM1
P.I. Station 105+06.33 N 10,162,801.2085 E 3,120,075.3564
Delta = 23° 37' 55.1248" (RT)
Degree = 5° 43' 46.4806"
Tangent = 209.2022
Length = 412.4558
Radius = 1,000.0000
External = 21.6484
Long Chord = 409.5384
Mid. Ord. = 21.1897
P.C. Station 102+97.12 N 10,162,649.7843 E 3,120,219.7041
P.T. Station 107+09.58 N 10,162,997.7974 E 3,120,003.8138
C.C. N 10,163,339.7757 E 3,120,943.5216
Back = N 43° 37' 45.9586" W
Ahead = N 19° 59' 50.8337" W
Chord Bear = N 31° 48' 48.3961" W

Course from PT CL_WYM1 to PC CL_WYM2 N 19° 59' 50.8335" W Dist 286.6778

Curve Data

Curve CL_WYM2
P.I. Station 111+86.87 N 10,163,446.3144 E 3,119,840.5895
Delta = 21° 35' 02.7206" (RT)
Degree = 5° 43' 46.4806"
Tangent = 190.6163
Length = 376.7134
Radius = 1,000.0000
External = 18.0052
Long Chord = 374.4898
Mid. Ord. = 17.6867
P.C. Station 109+96.26 N 10,163,267.1908 E 3,119,905.7762
P.T. Station 113+72.97 N 10,163,636.8576 E 3,119,845.8674
C.C. N 10,163,609.1692 E 3,120,845.4840
Back = N 19° 59' 50.8337" W
Ahead = N 1° 35' 11.8869" E
Chord Bear = N 9° 12' 19.4734" W

Course from PT CL_WYM2 to PC CL_WYM3 N 1° 35' 11.8869" E Dist 275.9032

Curve Data

Curve CL_WYM3
P.I. Station 118+59.84 N 10,164,123.5364 E 3,119,859.3480
Delta = 22° 58' 35.5954" (LT)
Degree = 5° 31' 11.3686"
Tangent = 210.9623
Length = 416.2552
Radius = 1,038.0000
External = 21.2210
Long Chord = 413.4716
Mid. Ord. = 20.7958
P.C. Station 116+48.87 N 10,163,912.6550 E 3,119,853.5067
P.T. Station 120+65.13 N 10,164,319.9677 E 3,119,782.4073
C.C. N 10,163,941.3956 E 3,118,815.9047
Back = N 1° 35' 11.8869" E
Ahead = N 21° 23' 23.7086" W
Chord Bear = N 9° 54' 05.9108" W

Course from PT CL_WYM3 to PC CL_WYM4 N 21° 23' 23.7085" W Dist 314.6749

Curve Data

Curve CL_WYM4
P.I. Station 124+18.24 N 10,164,648.7549 E 3,119,653.6237
Delta = 4° 24' 07.5322" (LT)
Degree = 5° 43' 46.4806"
Tangent = 38.4344
Length = 76.8310
Radius = 1,000.0000
External = 0.7383
Long Chord = 76.8121
Mid. Ord. = 0.7378
P.C. Station 123+79.80 N 10,164,612.9678 E 3,119,667.6412
P.T. Station 124+56.63 N 10,164,683.3604 E 3,119,636.9007
C.C. N 10,164,248.2548 E 3,118,736.5212
Back = N 21° 23' 23.7086" W
Ahead = N 25° 47' 31.2407" W
Chord Bear = N 23° 35' 27.4746" W

Course from PT CL_WYM4 to PC CL_WYM5 N 25° 47' 31.2409" W Dist 290.5820

Curve Data

Curve CL_WYM5
P.I. Station 127+83.73 N 10,164,977.8715 E 3,119,494.5791
Delta = 4° 10' 56.7108" (RT)
Degree = 5° 43' 46.4806"
Tangent = 36.5147
Length = 72.9970
Radius = 1,000.0000
External = 0.6664
Long Chord = 72.9808
Mid. Ord. = 0.6660
P.C. Station 127+47.22 N 10,164,944.9944 E 3,119,510.4668
P.T. Station 128+20.21 N 10,165,011.8198 E 3,119,481.1314
C.C. N 10,165,380.1000 E 3,120,410.8463
Back = N 25° 47' 31.2407" W
Ahead = N 21° 36' 34.5299" W
Chord Bear = N 23° 42' 02.8853" W

Course from PT CL_WYM5 to PC CL_WYM6 N 21° 36' 34.5296" W Dist 208.2985

Curve Data

Curve CL_WYM6
P.I. Station 130+51.64 N 10,165,226.9840 E 3,119,395.9003
Delta = 2° 39' 00.8471" (LT)
Degree = 5° 43' 46.4806"
Tangent = 23.1318
Length = 46.2553
Radius = 1,000.0000
External = 0.2675
Long Chord = 46.2512
Mid. Ord. = 0.2674
P.C. Station 130+28.51 N 10,165,205.4780 E 3,119,404.4192
P.T. Station 130+74.77 N 10,165,248.0731 E 3,119,386.3960
C.C. N 10,164,837.1978 E 3,118,474.7044
Back = N 21° 36' 34.5299" W
Ahead = N 24° 15' 35.3771" W
Chord Bear = N 22° 56' 04.9535" W

Course from PT CL_WYM6 to PC CL_WYM7 N 24° 15' 35.3773" W Dist 161.2882

Curve Data

Curve CL_WYM7
P.I. Station 132+66.24 N 10,165,422.6336 E 3,119,307.7262
Delta = 3° 27' 26.6288" (LT)
Degree = 5° 43' 46.4806"
Tangent = 30.1806
Length = 60.3430
Radius = 1,000.0000
External = 0.4553
Long Chord = 60.3338
Mid. Ord. = 0.4551
P.C. Station 132+36.06 N 10,165,395.1182 E 3,119,320.1266
P.T. Station 132+96.40 N 10,165,449.3511 E 3,119,293.6889
C.C. N 10,164,984.2430 E 3,118,408.4350
Back = N 24° 15' 35.3771" W
Ahead = N 27° 43' 02.0058" W
Chord Bear = N 25° 59' 18.6914" W

Course from PT CL_WYM7 to PC CL_WYM8 N 27° 43' 02.0056" W Dist 159.0496

Curve Data

Curve CL_WYM8
P.I. Station 134+85.24 N 10,165,616.5260 E 3,119,205.8560
Delta = 3° 24' 47.4633" (RT)
Degree = 5° 43' 46.4806"
Tangent = 29.7945
Length = 59.5713
Radius = 1,000.0000
External = 0.4438
Long Chord = 59.5625
Mid. Ord. = 0.4436
P.C. Station 134+55.45 N 10,165,590.1504 E 3,119,219.7136
P.T. Station 135+15.02 N 10,165,643.6800 E 3,119,193.5932
C.C. N 10,166,055.2586 E 3,120,104.9675
Back = N 27° 43' 02.0058" W
Ahead = N 24° 18' 14.5425" W
Chord Bear = N 26° 00' 38.2741" W

Course from PT CL_WYM8 to PC CL_WYM9 N 24° 18' 14.5425" W Dist 546.0373

Curve Data

Curve CL_WYM9
P.I. Station 141+68.43 N 10,166,239.1853 E 3,118,924.6617
Delta = 4° 05' 59.1471" (RT)
Degree = 1° 54' 35.4935"
Tangent = 107.3774
Length = 214.6631
Radius = 3,000.0000
External = 1.9210
Long Chord = 214.6173
Mid. Ord. = 1.9198
P.C. Station 140+61.06 N 10,166,141.3243 E 3,118,968.8559
P.T. Station 142+75.72 N 10,166,339.9554 E 3,118,887.5770
C.C. N 10,167,376.0601 E 3,121,702.9787
Back = N 24° 18' 14.5425" W
Ahead = N 20° 12' 15.3953" W
Chord Bear = N 22° 15' 14.9689" W

Course from PT CL_WYM9 to PC CL_WYM10 N 20° 12' 15.3953" W Dist 778.1283

Curve Data

Curve CL_WYM10
P.I. Station 153+85.11 N 10,167,381.0797 E 3,118,504.4296
Delta = 36° 39' 21.2555" (RT)
Degree = 5° 43' 46.4806"
Tangent = 331.2597
Length = 639.7662
Radius = 1,000.0000
External = 53.4386
Long Chord = 628.9112
Mid. Ord. = 50.7278
P.C. Station 150+53.85 N 10,167,070.2033 E 3,118,618.8362
P.T. Station 156+93.61 N 10,167,698.7773 E 3,118,598.2443
C.C. N 10,167,415.5716 E 3,119,557.3034
Back = N 20° 12' 15.3953" W
Ahead = N 16° 27' 05.8601" E
Chord Bear = N 1° 52' 34.7676" W

Course from PT CL_WYM10 to WYM02 N 16° 27' 05.8601" E Dist 205.7036

Point WYM02 N 10,167,896.0592 E 3,118,656.5007 Sta 158+99.32

==========
Ending chain CL_WYM description

Beginning chain CL_SBR description
==========

Point 212 N 10,167,969.5311 E 3,117,056.8808 Sta 30+00.00

Course from 212 to PC CL_SBR_1 N 85° 04' 28.8812" E Dist 232.9178

Curve Data

Curve CL_SBR_1
P.I. Station 33+85.24 N 10,168,002.6069 E 3,117,440.7018
Delta = 13° 21' 58.1835" (RT)
Degree = 4° 24' 26.5236"
Tangent = 152.3257
Length = 303.2666
Radius = 1,300.0000
External = 8.8939
Long Chord = 302.5814
Mid. Ord. = 8.8334
P.C. Station 32+32.92 N 10,167,989.5287 E 3,117,288.9385
P.T. Station 35+36.19 N 10,167,980.2473 E 3,117,591.3775
C.C. N 10,166,694.3290 E 3,117,400.5527
Back = N 85° 04' 28.8810" E
Ahead = S 81° 33' 32.9355" E
Chord Bear = S 88° 14' 32.0273" E

Course from PT CL_SBR_1 to 213 S 81° 33' 32.9353" E Dist 127.7752

Point 213 N 10,167,961.4914 E 3,117,717.7687 Sta 36+63.96

Course from 213 to 214 S 81° 33' 32.9355" E Dist 513.6516

Point 214 N 10,167,886.0933 E 3,118,225.8563 Sta 41+77.61

Course from 214 to PC CL_SBR_2 S 81° 33' 32.9354" E Dist 72.5911

Curve Data

Curve CL_SBR_2
P.I. Station 43+14.00 N 10,167,866.0741 E 3,118,360.7609
Delta = 7° 17' 59.9730" (RT)
Degree = 5° 43' 46.4806"
Tangent = 63.7908
Length = 127.4089
Radius = 1,000.0000
External = 2.0326
Long Chord = 127.3227
Mid. Ord. = 2.0284
P.C. Station 42+50.20 N 10,167,875.4378 E 3,118,297.6611
P.T. Station 43+77.61 N 10,167,848.7685 E 3,118,422.1594
C.C. N 10,166,886.2699 E 3,118,150.8728
Back = S 81° 33' 32.9355" E
Ahead = S 74° 15' 32.9625" E
Chord Bear = S 77° 54' 32.9490" E

Curve Data

Curve CL_SBR_3
P.I. Station 44+20.56 N 10,167,837.1184 E 3,118,463.4928
Delta = 4° 55' 04.7269" (RT)
Degree = 5° 43' 46.4806"
Tangent = 42.9438
Length = 85.8349
Radius = 1,000.0000
External = 0.9217
Long Chord = 85.8086
Mid. Ord. = 0.9208
P.C. Station 43+77.61 N 10,167,848.7685 E 3,118,422.1594
P.T. Station 44+63.45 N 10,167,821.9677 E 3,118,503.6753
C.C. N 10,166,886.2699 E 3,118,150.8728
Back = S 74° 15' 32.9625" E
Ahead = S 69° 20' 28.2356" E
Chord Bear = S 71° 48' 00.5991" E

Course from PT CL_SBR_3 to 215 S 69° 20' 28.2357" E Dist 52.2751

Point 215 N 10,167,803.5249 E 3,118,552.5890 Sta 45+15.72

Course from 215 to PC 4 S 69° 20' 28.2357" E Dist 460.2063

Curve Data

Curve 4
P.I. Station 52+19.07 N 10,167,555.3807 E 3,119,210.7137
Delta = 8° 41' 25.1038" (LT)
Degree = 1° 47' 25.7752"
Tangent = 243.1455
Length = 485.3583
Radius = 3,200.0000
External = 9.2242
Long Chord = 484.8932
Mid. Ord. = 9.1976
P.C. Station 49+75.93 N 10,167,641.1630 E 3,118,983.2030
P.T. Station 54+61.29 N 10,167,504.9586 E 3,119,448.5736
C.C. N 10,170,635.3960 E 3,120,112.1709
Back = S 69° 20' 28.2356" E
Ahead = S 78° 01' 53.3394" E
Chord Bear = S 73° 41' 10.7875" E

Curve Data

Curve CL_SBR_5
P.I. Station 58+79.38 N 10,167,418.2575 E 3,119,857.5749
Delta = 33° 15' 18.0011" (LT)
Degree = 4° 05' 33.2004"
Tangent = 418.0899
Length = 812.5729
Radius = 1,400.0000
External = 61.0952
Long Chord = 801.2152
Mid. Ord. = 58.5405
P.C. Station 54+61.29 N 10,167,504.9586 E 3,119,448.5736
P.T. Station 62+73.86 N 10,167,570.0373 E 3,120,247.1414
C.C. N 10,168,874.5250 E 3,119,738.8974
Back = S 78° 01' 53.3394" E
Ahead = N 68° 42' 48.6595" E
Chord Bear = N 85° 20' 27.6600" E

Course from PT CL_SBR_5 to 216 N 68° 42' 48.6596" E Dist 578.2970

Point 216 N 10,167,779.9773 E 3,120,785.9852 Sta 68+52.16

==========
Ending chain CL_SBR description

Beginning chain CL_TNR description
==========

Point TNR04 N 10,164,723.0885 E 3,119,617.7022 Sta 10+00.00

Course from TNR04 to TNR05 N 69° 35' 49.2276" E Dist 42.9829

Point TNR05 N 10,164,738.0733 E 3,119,657.9885 Sta 10+42.98

Course from TNR05 to TNR06 N 69° 35' 49.2258" E Dist 86.5351

Point TNR06 N 10,164,768.2412 E 3,119,739.0947 Sta 11+29.52

==========
Ending chain CL_TNR description

Beginning chain CL_SUP description
==========

Point CLSUP01 N 10,165,295.6146 E 3,119,258.7427 Sta 0+00.00

Course from CLSUP01 to PC CL_SUP1 N 6° 43' 49.5791" W Dist 15.0022

Curve Data

Curve CL_SUP1
P.I. Station 0+49.33 N 10,165,344.5191 E 3,119,252.2837
Delta = 29° 12' 54.4052" (LT)
Degree = 43° 29' 53.2979"
Tangent = 34.3291
Length = 67.1641
Radius = 131.7201
External = 4.4000
Long Chord = 66.4388
Mid. Ord. = 4.2577
P.C. Station 0+15.00 N 10,165,310.5134 E 3,119,256.9845
P.T. Station 0+82.17 N 10,165,371.9046 E 3,119,231.5831
C.C. N 10,165,292.4766 E 3,119,126.5052
Back = N 7° 52' 13.4464" W
Ahead = N 37° 05' 07.8516" W
Chord Bear = N 22° 28' 40.6490" W

Curve Data

Curve CL_SUP2
P.I. Station 0+82.17 N 10,165,371.9046 E 3,119,231.5831
Delta = 0° 00' 00.0000" (LT)
Degree = 0° 00' 00.0000"
Tangent = 0.0000
Length = 0.0000
Radius = 0.0000
External = 0.0000
Long Chord = 0.0000
Mid. Ord. = 0.0000
P.C. Station 0+82.17 N 10,165,371.9046 E 3,119,231.5831
P.T. Station 0+82.17 N 10,165,371.9046 E 3,119,231.5831
C.C. N 10,165,371.9046 E 3,119,231.5831
Back = Due South
Ahead = Due South
Chord Bear = Due North

Curve Data

Curve CL_SUP3
P.I. Station 0+82.17 N 10,165,371.9046 E 3,119,231.5831
Delta = 0° 00' 00.0000" (LT)
Degree = 0° 00' 00.0000"
Tangent = 0.0000
Length = 0.0000
Radius = 0.0000
External = 0.0000
Long Chord = 0.0000
Mid. Ord. = 0.0000
P.C. Station 0+82.17 N 10,165,371.9046 E 3,119,231.5831
P.T. Station 0+82.17 N 10,165,371.9046 E 3,119,231.5831
C.C. N 10,165,371.9046 E 3,119,231.5831
Back = Due South
Ahead = Due South
Chord Bear = Due North

Course from PT CL_SUP3 to PC CL_SUP4 N 33° 57' 41.7788" W Dist 39.8595

Curve Data

Curve CL_SUP4
P.I. Station 1+48.98 N 10,165,427.3205 E 3,119,194.2586
Delta = 45° 02' 42.9101" (RT)
Degree = 88° 08' 50.4711"
Tangent = 26.9540
Length = 51.1022
Radius = 65.0000
External = 5.3670
Long Chord = 49.7963
Mid. Ord. = 4.9577
P.C. Station 1+22.03 N 10,165,404.9645 E 3,119,209.3161
P.T. Station 1+73.13 N 10,165,453.7717 E 3,119,199.4403
C.C. N 10,165,441.2760 E 3,119,263.2279
Back = N 33° 57' 41.7778" W
Ahead = N 11° 05' 01.1323" E
Chord Bear = N 11° 26' 20.3227" W

Curve Data

Curve CL_SUP5
P.I. Station 2+01.79 N 10,165,482.0297 E 3,119,204.2074
Delta = 31° 58' 54.4550" (LT)
Degree = 57° 17' 44.8050"
Tangent = 28.6573
Length = 55.8188
Radius = 100.0000
External = 4.0252
Long Chord = 55.0969
Mid. Ord. = 3.8695
P.C. Station 1+73.13 N 10,165,453.7717 E 3,119,199.4403
P.T. Station 2+28.95 N 10,165,508.5236 E 3,119,193.2840
C.C. N 10,165,470.4063 E 3,119,100.8336
Back = N 9° 34' 31.6594" E
Ahead = N 22° 24' 22.7956" W
Chord Bear = N 6° 24' 55.5681" W

Curve Data

Curve CL_SUP6
P.I. Station 2+38.30 N 10,165,517.1737 E 3,119,189.7175
Delta = 10° 41' 26.2110" (RT)
Degree = 57° 17' 44.8087"
Tangent = 9.3565
Length = 18.6586
Radius = 100.0000
External = 0.4368
Long Chord = 18.6316
Mid. Ord. = 0.4349
P.C. Station 2+28.95 N 10,165,508.5236 E 3,119,193.2840
P.T. Station 2+47.61 N 10,165,526.3352 E 3,119,187.8176
C.C. N 10,165,546.6408 E 3,119,285.7344
Back = N 22° 24' 22.7956" W
Ahead = N 11° 42' 56.5847" W
Chord Bear = N 17° 03' 39.6902" W

Course from PT CL_SUP6 to PC CL_SUP7 N 11° 42' 56.5824" W Dist 6.7878

WYOMING SPRINGS
SEGMENT 1
ROUND ROCK, TX

ROUND ROCK
TEXAS

halff
13620 BRANTWICK DR
BLDG C, STE 100
AUSTIN, TX 78729
(512) 777-4800
TBPELS FIRM #312

No.	Revision Date	Description

F-312 4/5/23
STATE OF TEXAS
JEFFREY L. NAGY
133255
LICENSED
PROFESSIONAL ENGINEER

100% SUBMITTAL

Project No.:	36179.002
Issued:	4/17/2023
Drawn By:	SG
Checked By:	JN
Scale:	N.T.S

Sheet Title
HORIZONTAL ALIGNMENT
DATA SHEET
(1 OF 8)

77
Sheet Number

Civil 3D Projection: NAD83 (2011) Texas Central (FIPS 4203) (US Survey Feet)
Civil 3D Projection: NAD83 (2011) Texas Central (FIPS 4203) (US Survey Feet)
4/17/2023 11:39:21 AM
4/17/2023

Curve Data
Curve CL_SUP7
P.I. Station 2+60.85 N 10,165,539.3059 E 3,119,185.1278
Delta = 12° 17' 17.1683" (LT)
Degree = 95° 29' 34.6771"
Tangent = 6.4588
Length = 12.8681
Radius = 60.0000
External = 0.3466
Long Chord = 12.8434
Mid. Ord. = 0.3446
P.C. Station 2+54.39 N 10,165,532.9817 E 3,119,186.4393
P.T. Station 2+67.26 N 10,165,545.2062 E 3,119,182.5004
C.C. N 10,165,520.7983 E 3,119,127.6893
Back = N 11° 42' 56.5847" W
Ahead = N 24° 00' 13.7530" W
Chord Bear = N 17° 51' 35.1688" W

Course from PT CL_SUP7 to CLSUP02 N 24° 00' 13.7534" W Dist 122.0307

Point CLSUP02 N 10,165,656.6834 E 3,119,132.8586 Sta 3+89.29

Course from CLSUP02 to PC CL_SUP8 N 24° 18' 14.5426" W Dist 20.8025

Curve Data
Curve CL_SUP8
P.I. Station 4+48.03 N 10,165,710.2182 E 3,119,108.6822
Delta = 64° 36' 38.1549" (LT)
Degree = 95° 29' 34.6771"
Tangent = 37.9382
Length = 67.6601
Radius = 60.0000
External = 10.9881
Long Chord = 64.1317
Mid. Ord. = 9.2873
P.C. Station 4+10.09 N 10,165,675.6423 E 3,119,124.2967
P.T. Station 4+77.75 N 10,165,710.9368 E 3,119,070.7508
C.C. N 10,165,650.9476 E 3,119,069.6143
Back = N 24° 18' 14.5425" W
Ahead = N 88° 54' 52.6974" W
Chord Bear = N 56° 36' 33.6199" W

Course from PT CL_SUP8 to PC CL_SUP9 N 88° 54' 52.6978" W Dist 134.4017

Curve Data
Curve CL_SUP9
P.I. Station 6+16.18 N 10,165,713.5589 E 3,118,932.3473
Delta = 7° 05' 22.7973" (RT)
Degree = 88° 08' 50.4711"
Tangent = 4.0266
Length = 8.0430
Radius = 65.0000
External = 0.1246
Long Chord = 8.0378
Mid. Ord. = 0.1244
P.C. Station 6+12.16 N 10,165,713.4827 E 3,118,936.3732
P.T. Station 6+20.20 N 10,165,714.1315 E 3,118,928.3616
C.C. N 10,165,778.4710 E 3,118,937.6044
Back = N 88° 54' 52.6974" W
Ahead = N 81° 49' 29.9001" W
Chord Bear = N 85° 22' 11.2987" W

Course from PT CL_SUP9 to PC CL_SUP10 N 81° 49' 29.8998" W Dist 85.8639

Curve Data
Curve CL_SUP10
P.I. Station 7+32.15 N 10,165,730.0512 E 3,118,817.5447
Delta = 47° 00' 10.8804" (RT)
Degree = 95° 29' 34.6771"
Tangent = 26.0906
Length = 49.2214
Radius = 60.0000
External = 5.4272
Long Chord = 47.8528
Mid. Ord. = 4.9770
P.C. Station 7+06.06 N 10,165,726.3412 E 3,118,843.3702
P.T. Station 7+55.28 N 10,165,751.4698 E 3,118,802.6462
C.C. N 10,165,785.7315 E 3,118,851.9020
Back = N 81° 49' 29.9001" W
Ahead = N 34° 49' 19.0197" W
Chord Bear = N 58° 19' 24.4599" W

Course from PT CL_SUP10 to CLSUP03 N 34° 49' 19.0171" W Dist 15.9663

Point CLSUP03 N 10,165,764.5770 E 3,118,793.5290 Sta 7+71.25

==========
Ending chain CL_SUP description

Beginning chain SUP-EDGE description
==========

Point SUP100 N 10,163,443.2388 E 3,119,810.7172 Sta 1+00.00

Course from SUP100 to PC SUP-EDGE1 N 35° 07' 20.56" W Dist 3.4882

Curve Data
Curve SUP-EDGE1
P.I. Station 1+07.69 N 10,163,449.5862 E 3,119,806.3710
Delta = 31° 19' 12.80" (RT)
Degree = 381° 58' 18.71"
Tangent = 4.2050
Length = 8.1996
Radius = 15.0000
External = 0.5783
Long Chord = 8.0979
Mid. Ord. = 0.5568
P.C. Station 1+03.49 N 10,163,446.0919 E 3,119,808.7103
P.T. Station 1+11.69 N 10,163,453.7873 E 3,119,806.1890
C.C. N 10,163,454.4367 E 3,119,821.1749
Back = N 33° 48' 05.23" W
Ahead = N 2° 28' 52.43" W
Chord Bear = N 18° 08' 28.83" W

Curve Data
Curve SUP-EDGE2
P.I. Station 1+14.57 N 10,163,456.6621 E 3,119,806.0644
Delta = 4° 50' 45.94" (LT)
Degree = 84° 15' 30.60"
Tangent = 2.8774
Length = 5.7515
Radius = 68.0000
External = 0.0609
Long Chord = 5.7497
Mid. Ord. = 0.0608
P.C. Station 1+11.69 N 10,163,453.7873 E 3,119,806.1890
P.T. Station 1+17.44 N 10,163,459.5160 E 3,119,805.6974
C.C. N 10,163,450.8435 E 3,119,738.2527
Back = N 2° 28' 52.43" W
Ahead = N 7° 19' 38.37" W
Chord Bear = N 4° 54' 15.40" W

Course from PT SUP-EDGE2 to PC SUP-EDGE3 N 8° 15' 55.45" W Dist 20.3298

Curve Data
Curve SUP-EDGE3
P.I. Station 1+39.23 N 10,163,481.0838 E 3,119,802.5643
Delta = 2° 47' 46.16" (RT)
Degree = 95° 29' 34.68"
Tangent = 1.4644
Length = 2.9281
Radius = 60.0000
External = 0.0179
Long Chord = 2.9278
Mid. Ord. = 0.0179
P.C. Station 1+37.77 N 10,163,479.6347 E 3,119,802.7748
P.T. Station 1+40.70 N 10,163,482.5415 E 3,119,802.4247
C.C. N 10,163,488.2602 E 3,119,862.1516
Back = N 8° 15' 55.45" W
Ahead = N 5° 28' 09.28" W
Chord Bear = N 6° 52' 02.37" W

Course from PT SUP-EDGE3 to PC SUP-EDGE4 N 5° 28' 09.28" W Dist 28.5348

Curve Data
Curve SUP-EDGE4
P.I. Station 1+76.11 N 10,163,517.7954 E 3,119,799.0493
Delta = 13° 04' 59.85" (RT)
Degree = 95° 29' 34.68"
Tangent = 6.8803
Length = 13.7008
Radius = 60.0000
External = 0.3932
Long Chord = 13.6710
Mid. Ord. = 0.3906
P.C. Station 1+69.23 N 10,163,510.9464 E 3,119,799.7050
P.T. Station 1+82.93 N 10,163,524.6151 E 3,119,799.9609
C.C. N 10,163,516.6651 E 3,119,859.4319
Back = N 5° 28' 09.28" W
Ahead = N 7° 36' 50.57" E
Chord Bear = N 1° 04' 20.64" E

Curve Data
Curve SUP-EDGE5
P.I. Station 1+87.40 N 10,163,529.0385 E 3,119,800.5522
Delta = 8° 30' 27.16" (LT)
Degree = 95° 29' 34.63"
Tangent = 4.4627
Length = 8.9091
Radius = 60.0000
External = 0.1657
Long Chord = 8.9009
Mid. Ord. = 0.1653
P.C. Station 1+82.93 N 10,163,524.6151 E 3,119,799.9609
P.T. Station 1+91.84 N 10,163,533.5007 E 3,119,800.4826
C.C. N 10,163,532.5650 E 3,119,740.4899
Back = N 7° 36' 50.57" E
Ahead = N 0° 53' 36.59" W
Chord Bear = N 3° 21' 36.99" E

Course from PT SUP-EDGE5 to PC SUP-EDGE6 N 0° 53' 36.59" W Dist 78.5707

Curve Data
Curve SUP-EDGE6
P.I. Station 3+01.13 N 10,163,642.7652 E 3,119,798.3618
Delta = 11° 36' 54.64" (RT)
Degree = 18° 58' 19.60"
Tangent = 30.7165
Length = 61.2224
Radius = 302.0000
External = 1.5581
Long Chord = 61.1176
Mid. Ord. = 1.5501
P.C. Station 2+70.41 N 10,163,612.0618 E 3,119,799.2574
P.T. Station 3+31.64 N 10,163,673.0202 E 3,119,803.6664
C.C. N 10,163,620.8668 E 3,120,101.1290
Back = N 1° 40' 14.58" W
Ahead = N 9° 56' 40.06" E
Chord Bear = N 4° 08' 12.74" E

Curve Data
Curve SUP-EDGE7
P.I. Station 3+53.55 N 10,163,694.6105 E 3,119,807.4518
Delta = 8° 21' 28.17" (LT)
Degree = 19° 05' 54.93"
Tangent = 21.9196
Length = 43.7615
Radius = 300.0000
External = 0.7997
Long Chord = 43.7227
Mid. Ord. = 0.7976
P.C. Station 3+31.64 N 10,163,673.0202 E 3,119,803.6664
P.T. Station 3+75.40 N 10,163,716.5217 E 3,119,808.0587
C.C. N 10,163,724.8282 E 3,119,508.1737
Back = N 9° 56' 40.06" E
Ahead = N 1° 35' 11.89" E
Chord Bear = N 5° 45' 55.97" E

Course from PT SUP-EDGE7 to PC SUP-EDGE8 N 1° 35' 11.89" E Dist 64.0805

Curve Data
Curve SUP-EDGE8
P.I. Station 4+47.35 N 10,163,788.4502 E 3,119,810.0510
Delta = 12° 50' 18.85" (LT)
Degree = 81° 51' 04.01"
Tangent = 7.8756
Length = 15.6853
Radius = 70.0000
External = 0.4416
Long Chord = 15.6525
Mid. Ord. = 0.4389
P.C. Station 4+39.48 N 10,163,780.5776 E 3,119,809.8330
P.T. Station 4+55.16 N 10,163,796.1745 E 3,119,808.5143
C.C. N 10,163,782.5158 E 3,119,739.8598
Back = N 1° 35' 11.89" E
Ahead = N 11° 15' 06.96" W
Chord Bear = N 4° 49' 57.54" W

Curve Data
Curve SUP-EDGE9
P.I. Station 4+77.66 N 10,163,818.2437 E 3,119,804.1237
Delta = 12° 50' 18.85" (RT)
Degree = 28° 38' 52.40"
Tangent = 22.5018
Length = 44.8151
Radius = 200.0000
External = 1.2618
Long Chord = 44.7214
Mid. Ord. = 1.2539
P.C. Station 4+55.16 N 10,163,796.1745 E 3,119,808.5143
P.T. Station 4+99.98 N 10,163,840.7368 E 3,119,804.7467
C.C. N 10,163,835.1991 E 3,120,004.6701
Back = N 11° 15' 06.96" W
Ahead = N 1° 35' 11.89" E
Chord Bear = N 4° 49' 57.54" W

Course from PT SUP-EDGE9 to PC SUP-EDGE10 N 1° 35' 11.89" E Dist 57.8620

Curve Data
Curve SUP-EDGE10
P.I. Station 5+65.87 N 10,163,906.5997 E 3,119,806.5711
Delta = 12° 43' 17.01" (RT)
Degree = 79° 34' 38.90"
Tangent = 8.0261
Length = 15.9862
Radius = 72.0000
External = 0.4460
Long Chord = 15.9534
Mid. Ord. = 0.4432
P.C. Station 5+57.84 N 10,163,898.5767 E 3,119,806.3488
P.T. Station 5+73.83 N 10,163,914.3768 E 3,119,808.5546
C.C. N 10,163,896.5831 E 3,119,878.3212
Back = N 1° 35' 11.89" E
Ahead = N 14° 18' 28.90" E
Chord Bear = N 7° 56' 50.39" E

Curve Data
Curve SUP-EDGE11
P.I. Station 5+87.36 N 10,163,927.4922 E 3,119,811.8996
Delta = 14° 17' 12.66" (LT)
Degree = 53° 03' 05.92"
Tangent = 13.5352
Length = 26.9301
Radius = 108.0000
External = 0.8449
Long Chord = 26.8604
Mid. Ord. = 0.8383
P.C. Station 5+73.83 N 10,163,914.3768 E 3,119,808.5546
P.T. Station 6+00.76 N 10,163,941.0275 E 3,119,813.9046
C.C. N 10,163,941.0674 E 3,119,703.9046
Back = N 14° 18' 28.90" E
Ahead = N 0° 01' 16.25" E
Chord Bear = N 7° 09' 52.57" E

Course from PT SUP-EDGE11 to PC SUP-EDGE12 N 0° 34' 07.09" W Dist 20.5057

Curve Data
Curve SUP-EDGE12
P.I. Station 6+26.22 N 10,163,966.4934 E 3,119,811.6008
Delta = 2° 50' 33.25" (RT)
Degree = 28° 38' 52.40"
Tangent = 4.9622
Length = 9.9224
Radius = 200.0000
External = 0.0616
Long Chord = 9.9214
Mid. Ord. = 0.0615
P.C. Station 6+21.26 N 10,163,961.5322 E 3,119,811.7011
P.T. Station 6+31.18 N 10,163,971.4535 E 3,119,811.7466
C.C. N 10,163,965.5756 E 3,120,011.6602
Back = N 1° 09' 30.42" W
Ahead = N 1° 41' 02.83" E
Chord Bear = N 0° 15' 46.20" E

Course from PT SUP-EDGE12 to PC SUP-EDGE13 N 1° 41' 02.83" E Dist 15.0428

Curve Data
Curve SUP-EDGE13
P.I. Station 6+55.56 N 10,163,995.8237 E 3,119,812.4632
Delta = 5° 20' 46.91" (LT)
Degree = 28° 38' 52.40"
Tangent = 9.3379
Length = 18.6623
Radius = 200.0000
External = 0.2179
Long Chord = 18.6556
Mid. Ord. = 0.2176
P.C. Station 6+46.23 N 10,163,986.4898 E 3,119,812.1887
P.T. Station 6+64.89 N 10,164,005.1426 E 3,119,811.8667
C.C. N 10,163,992.3676 E 3,119,612.2751
Back = N 1° 41' 02.83" E
Ahead = N 3° 39' 44.08" W
Chord Bear = N 0° 59' 20.62" W

Curve Data
Curve SUP-EDGE14
P.I. Station 7+75.70 N 10,164,115.7227 E 3,119,804.7890
Delta = 12° 40' 15.68" (LT)
Degree = 5° 44' 27.82"
Tangent = 110.8063
Length = 220.7087
Radius = 998.0000
External = 6.1325
Long Chord = 220.2592
Mid. Ord. = 6.0950
P.C. Station 6+64.89 N 10,164,005.1426 E 3,119,811.8667
P.T. Station 8+85.60 N 10,164,222.0571 E 3,119,773.6276
C.C. N 10,163,941.3956 E 3,118,815.9047
Back = N 3° 39' 44.08" W
Ahead = N 16° 19' 59.75" W
Chord Bear = N 9° 59' 51.92" W

Curve Data
Curve SUP-EDGE15
P.I. Station 9+02.23 N 10,164,238.0204 E 3,119,768.9495
Delta = 9° 30' 32.73" (LT)
Degree = 28° 38' 52.41"
Tangent = 16.6347
Length = 33.1930
Radius = 200.0000
External = 0.6906
Long Chord = 33.1549
Mid. Ord. = 0.6882
P.C. Station 8+85.60 N 10,164,222.0571 E 3,119,773.6276
P.T. Station 9+18.79 N 10,164,252.9916 E 3,119,761.6985
C.C. N 10,164,165.8123 E 3,119,581.6992
Back = N 16° 19' 59.75" W
Ahead = N 25° 50' 32.48" W
Chord Bear = N 21° 05' 16.12" W

Curve Data
Curve SUP-EDGE16
P.I. Station 9+24.83 N 10,164,258.4292 E 3,119,759.0649
Delta = 6° 54' 53.71" (RT)
Degree = 57° 17' 44.78"
Tangent = 6.0417
Length = 12.0688
Radius = 100.0000
External = 0.1823
Long Chord = 12.0615
Mid. Ord. = 0.1820
P.C. Station 9+18.79 N 10,164,252.9916 E 3,119,761.6985
P.T. Station 9+30.86 N 10,164,264.1442 E 3,119,757.1052
C.C. N 10,164,296.5813 E 3,119,851.6982
Back = N 25° 50' 32.48" W
Ahead = N 18° 55' 38.78" W
Chord Bear = N 22° 23' 05.63" W

Curve Data
Curve SUP-EDGE17
P.I. Station 9+52.24 N 10,164,284.3730 E 3,119,750.1685
Delta = 2° 27' 44.93" (LT)
Degree = 5° 45' 30.13"
Tangent = 21.3850
Length = 42.7635
Radius = 995.0000
External = 0.2298
Long Chord = 42.7602
Mid. Ord. = 0.2297
P.C. Station 9+30.86 N 10,164,264.1442 E 3,119,757.1052
P.T. Station 9+73.62 N 10,164,304.2850 E 3,119,742.3691
C.C. N 10,163,941.3956 E 3,118,815.9047
Back = N 18° 55' 38.78" W
Ahead = N 21° 23' 23.71" W
Chord Bear = N 20° 09' 31.24" W

Course from PT SUP-EDGE17 to SUP101 N 21° 23' 23.71" W Dist 93.1432

Point SUP101 N 10,164,391.0125 E 3,119,708.3986 Sta 10+66.77

Course from SUP101 to PC SUP-EDGE18 N 21° 23' 23.71" W Dist 231.1235

Curve Data
Curve SUP-EDGE18
P.I. Station 13+79.50 N 10,164,682.2052 E 3,119,594.3405
Delta = 9° 43' 23.47" (LT)
Degree = 5° 58' 17.11"
Tangent = 81.6103
Length = 162.8287
Radius = 959.5000
External = 3.4644
Long Chord = 162.6334
Mid. Ord. = 3.4520
P.C. Station 12+97.89 N 10,164,606.2162 E 3,119,624.1048
P.T. Station 14+60.72 N 10,164,752.0757 E 3,119,552.1701
C.C. N 10,164,256.2741 E 3,118,730.6952
Back = N 21° 23' 23.71" W
Ahead = N 31° 06' 47.17" W
Chord Bear = N 26° 15' 05.44" W

Curve Data
Curve SUP-EDGE19
P.I. Station 14+63.84 N 10,164,754.7460 E 3,119,550.5584
Delta = 5° 40' 06.60" (RT)
Degree = 90° 56' 44.44"
Tangent = 3.1190
Length = 6.2328
Radius = 63.0000
External = 0.0772
Long Chord = 6.2303
Mid. Ord. = 0.0771
P.C. Station 14+60.72 N 10,164,752.0757 E 3,119,552.1701
P.T. Station 14+66.95 N 10,164,757.5625 E 3,119,549.2184
C.C. N 10,164,784.6297 E 3,119,606.1075
Back = N 31° 06' 47.17" W
Ahead = N 25° 26' 40.58" W
Chord Bear = N 28° 16' 43.88" W

Course from PT SUP-EDGE19 to PC SUP-EDGE20 N 25° 26' 40.58" W Dist 52.3397

Curve Data
Curve SUP-EDGE20
P.I. Station 15+21.32 N 10,164,806.6579 E 3,119,525.8593
Delta = 3° 52' 28.54" (RT)
Degree = 95° 29' 34.68"
Tangent = 2.0295
Length = 4.0575
Radius = 60.0000
External = 0.0343
Long Chord = 4.0567
Mid. Ord. = 0.0343
P.C. Station 15+19.29 N 10,164,804.8253 E 3,119,526.7313
P.T. Station 15+23.35 N 10,164,808.5453 E 3,119,525.1132
C.C. N 10,164,830.6036 E 3,119,580.9113
Back = N 25° 26' 40.58" W
Ahead = N 21° 34' 12.03" W
Chord Bear = N 23° 30' 26.30" W

Course from PT SUP-EDGE20 to PC SUP-EDGE21 N 21° 34' 12.03" W Dist 39.9992

Curve Data
Curve SUP-EDGE21
P.I. Station 15+65.72 N 10,164,847.9453 E 3,119,509.5375
Delta = 3° 52' 28.54" (LT)
Degree = 81° 51' 04.01"
Tangent = 2.3678
Length = 4.7337
Radius = 70.0000
External = 0.0400
Long Chord = 4.7328
Mid. Ord. = 0.0400
P.C. Station 15+63.35 N 10,164,845.7433 E 3,119,510.4080
P.T. Station 15+68.08 N 10,164,850.0834 E 3,119,508.5202
C.C. N 10,164,820.0087 E 3,119,445.3101
Back = N 21° 34' 12.03" W
Ahead = N 25° 26' 40.58" W
Chord Bear = N 23° 30' 26.30" W

Course from PT SUP-EDGE21 to PC SUP-EDGE22 N 25° 26' 40.58" W Dist 90.6803

Curve Data
Curve SUP-EDGE22
P.I. Station 16+65.13 N 10,164,937.7227 E 3,119,466.8223
Delta = 12° 07' 34.52" (LT)
Degree = 95° 29' 34.68"
Tangent = 6.3731
Length = 12.6986
Radius = 60.0000
External = 0.3375
Long Chord = 12.6749
Mid. Ord. = 0.3356
P.C. Station 16+58.76 N 10,164,931.9678 E 3,119,469.5605
P.T. Station 16+71.46 N 10,164,942.7740 E 3,119,462.9364
C.C. N 10,164,906.1895 E 3,119,415.3804
Back = N 25° 26' 40.58" W
Ahead = N 37° 34' 15.10" W
Chord Bear = N 31° 30' 27.84" W

Curve Data
Curve SUP-EDGE23
P.I. Station 16+78.61 N 10,164,948.4414 E 3,119,458.5766
Delta = 13° 35' 31.12" (RT)
Degree = 95° 29' 34.69"
Tangent = 7.1503
Length = 14.2335
Radius = 60.0000
External = 0.4246
Long Chord = 14.2001
Mid. Ord. = 0.4216
P.C. Station 16+71.46 N 10,164,942.7740 E 3,119,462.9364
P.T. Station 16+85.69 N 10,164,954.9746 E 3,119,455.6707
C.C. N 10,164,979.3586 E 3,119,510.4924
Back = N 37° 34' 15.10" W
Ahead = N 23° 58' 43.98" W
Chord Bear = N 30° 46' 29.54" W

WYOMING SPRINGS
SEGMENT 1
ROUND ROCK, TX

ROUND ROCK
TEXAS

halff
13620 BRANTWICK DR
BLDG C, STE 100
AUSTIN, TX 78729
(512) 777-4800
TBPELS FIRM #312

No.	Revision	Date	Description

F-312 4/5/23
STATE OF TEXAS
JEFFREY L. NAGY
133255
LICENSED
PROFESSIONAL ENGINEER

100% SUBMITTAL

Project No.:	36179.002
Issued:	4/17/2023
Drawn By:	SG
Checked By:	JN
Scale:	N.T.S

Sheet Title
HORIZONTAL ALIGNMENT DATA SHEET (2 OF 8)

Sheet Number
78

USER: JNAGY_HPW
PLOTTED: 4/17/2023 11:09:24 AM
FILE: C:\Users\JNAGY\Halff Associates Inc\Wyoming Springs - Documents\Design\Roadway\Horizontal\Segment 1\36179002_HALIGN_SEG1.dgn
DGN: 36179002_HALIGN_SEG1.dgn
4/17/2023 11:09:24 AM JNAGY HALFF

Curve Data

Curve SUP-EDGE24
P.I. Station 17+25.93 N 10,164,991.7385 E 3,119,439.3186
Delta = 4° 24' 28.55" (RT)
Degree = 5° 28' 48.82"
Tangent = 40.2365
Length = 80.4333
Radius = 1,045.5000
External = 0.7740
Long Chord = 80.4135
Mid. Ord. = 0.7734
P.C. Station 16+85.69 N 10,164,954.9746 E 3,119,455.6707
P.T. Station 17+66.13 N 10,165,029.6504 E 3,119,425.8404
C.C. N 10,165,379.8657 E 3,120,410.9391
Back = N 23° 58' 43.98" W
Ahead = N 19° 34' 15.43" W
Chord Bear = N 21° 46' 29.70" W

Course from PT SUP-EDGE24 to PC SUP-EDGE25 N 19° 34' 15.43" W Dist 84.5670

Curve Data

Curve SUP-EDGE25
P.I. Station 18+70.96 N 10,165,128.4251 E 3,119,390.7247
Delta = 32° 17' 23.67" (LT)
Degree = 81° 51' 04.01"
Tangent = 20.2640
Length = 39.4496
Radius = 70.0000
External = 2.8741
Long Chord = 38.9296
Mid. Ord. = 2.7607
P.C. Station 18+50.69 N 10,165,109.3318 E 3,119,397.5126
P.T. Station 18+90.14 N 10,165,140.9396 E 3,119,374.7868
C.C. N 10,165,085.8837 E 3,119,331.5567
Back = N 19° 34' 15.43" W
Ahead = N 51° 51' 39.09" W
Chord Bear = N 35° 42' 57.26" W

Curve Data

Curve SUP-EDGE26
P.I. Station 19+46.12 N 10,165,175.5120 E 3,119,330.7569
Delta = 58° 28' 52.29" (RT)
Degree = 57° 17' 44.81"
Tangent = 55.9811
Length = 102.0689
Radius = 100.0000
External = 14.6032
Long Chord = 97.6956
Mid. Ord. = 12.7424
P.C. Station 19+90.14 N 10,165,140.9396 E 3,119,374.7868
P.T. Station 19+92.21 N 10,165,231.1199 E 3,119,337.2110
C.C. N 10,165,219.5909 E 3,119,436.5442
Back = N 51° 51' 39.09" W
Ahead = N 6° 37' 13.19" E
Chord Bear = N 22° 37' 12.95" W

Curve Data

Curve SUP-EDGE27
P.I. Station 20+28.80 N 10,165,267.4626 E 3,119,341.4290
Delta = 33° 54' 42.30" (LT)
Degree = 47° 44' 47.34"
Tangent = 36.5867
Length = 71.0246
Radius = 120.0000
External = 5.4535
Long Chord = 69.9924
Mid. Ord. = 5.2164
P.C. Station 19+92.21 N 10,165,231.1199 E 3,119,337.2110
P.T. Station 20+63.24 N 10,165,299.9766 E 3,119,324.6534
C.C. N 10,165,244.9546 E 3,119,218.0111
Back = N 6° 37' 13.19" E
Ahead = N 27° 17' 29.11" W
Chord Bear = N 10° 20' 07.96" W

Course from PT SUP-EDGE27 to PC SUP-EDGE28 N 27° 17' 29.11" W Dist 164.7141

Curve Data

Curve SUP-EDGE28
P.I. Station 22+54.81 N 10,165,470.2241 E 3,119,236.8145
Delta = 2° 59' 14.57" (RT)
Degree = 5° 33' 45.71"
Tangent = 26.8580
Length = 53.7038
Radius = 1,030.0000
External = 0.3501
Long Chord = 53.6977
Mid. Ord. = 0.3500
P.C. Station 22+27.95 N 10,165,446.3558 E 3,119,249.1293
P.T. Station 22+81.66 N 10,165,494.7017 E 3,119,225.7603
C.C. N 10,165,918.6277 E 3,120,164.4758
Back = N 27° 17' 29.11" W
Ahead = N 24° 18' 14.54" W
Chord Bear = N 25° 47' 51.83" W

Course from PT SUP-EDGE28 to PC SUP-EDGE29 N 24° 18' 14.54" W Dist 161.2936

Curve Data

Curve SUP-EDGE29
P.I. Station 24+48.35 N 10,165,646.6265 E 3,119,157.1508
Delta = 10° 17' 41.65" (RT)
Degree = 95° 29' 34.68"
Tangent = 5.4049
Length = 10.7808
Radius = 60.0000
External = 0.2430
Long Chord = 10.7663
Mid. Ord. = 0.2420
P.C. Station 24+42.95 N 10,165,641.7005 E 3,119,159.3753
P.T. Station 24+53.73 N 10,165,651.8707 E 3,119,155.8423
C.C. N 10,165,666.3953 E 3,119,214.0578
Back = N 24° 18' 14.54" W
Ahead = N 14° 00' 32.89" W
Chord Bear = N 19° 09' 23.72" W

Course from PT SUP-EDGE29 to PC SUP-EDGE30 N 14° 00' 32.95" W Dist 0.3811

Curve Data

Curve SUP-EDGE30
P.I. Station 24+59.52 N 10,165,657.4846 E 3,119,154.4417
Delta = 10° 17' 41.65" (LT)
Degree = 95° 29' 34.68"
Tangent = 5.4049
Length = 10.7808
Radius = 60.0000
External = 0.2430
Long Chord = 10.7663
Mid. Ord. = 0.2420
P.C. Station 24+54.11 N 10,165,652.2405 E 3,119,155.7501
P.T. Station 24+64.89 N 10,165,662.4106 E 3,119,152.2171
C.C. N 10,165,637.7159 E 3,119,097.5347
Back = N 14° 00' 32.89" W
Ahead = N 24° 18' 14.54" W
Chord Bear = N 19° 09' 23.72" W

Course from PT SUP-EDGE30 to SUP102 N 24° 18' 14.54" W Dist 54.3301

Point SUP102 N 10,165,711.9257 E 3,119,129.8560 Sta 25+19.22

Course from SUP102 to PC SUP-EDGE31 N 24° 18' 14.54" W Dist 457.6071

Curve Data

Curve SUP-EDGE31
P.I. Station 30+02.80 N 10,166,152.6491 E 3,118,930.8243
Delta = 0° 58' 56.25" (RT)
Degree = 1° 53' 27.42"
Tangent = 25.9741
Length = 51.9470
Radius = 3,030.0000
External = 0.1113
Long Chord = 51.9464
Mid. Ord. = 0.1113
P.C. Station 29+76.83 N 10,166,128.9769 E 3,118,941.5147
P.T. Station 30+28.78 N 10,166,176.5011 E 3,118,920.5413
C.C. N 10,167,376.0601 E 3,121,702.9787
Back = N 24° 18' 14.54" W
Ahead = N 23° 19' 18.29" W
Chord Bear = N 23° 48' 46.42" W

Curve Data

Curve SUP-EDGE32
P.I. Station 30+40.56 N 10,166,187.3258 E 3,118,915.8746
Delta = 19° 07' 03.07" (LT)
Degree = 81° 51' 04.00"
Tangent = 11.7878
Length = 23.3565
Radius = 70.0000
External = 0.9856
Long Chord = 23.2483
Mid. Ord. = 0.9719
P.C. Station 30+28.78 N 10,166,176.5011 E 3,118,920.5413
P.T. Station 30+52.13 N 10,166,196.0251 E 3,118,907.9201
C.C. N 10,166,148.7885 E 3,118,856.2606
Back = N 23° 19' 18.29" W
Ahead = N 42° 26' 21.36" W
Chord Bear = N 32° 52' 49.83" W

Curve Data

Curve SUP-EDGE33
P.I. Station 30+62.66 N 10,166,203.7977 E 3,118,900.8129
Delta = 19° 54' 43.07" (RT)
Degree = 95° 29' 34.70"
Tangent = 10.5321
Length = 20.8518
Radius = 60.0000
External = 0.9174
Long Chord = 20.7470
Mid. Ord. = 0.9035
P.C. Station 30+52.13 N 10,166,196.0251 E 3,118,907.9201
P.T. Station 30+72.98 N 10,166,213.5261 E 3,118,896.7778
C.C. N 10,166,236.5136 E 3,118,952.1997
Back = N 42° 26' 21.36" W
Ahead = N 22° 31' 38.29" W
Chord Bear = N 32° 28' 59.82" W

Curve Data

Curve SUP-EDGE34
P.I. Station 31+33.92 N 10,166,269.8151 E 3,118,873.4308
Delta = 2° 19' 22.89" (RT)
Degree = 1° 54' 22.66"
Tangent = 60.9387
Length = 121.8608
Radius = 3,005.6099
External = 0.6177
Long Chord = 121.8524
Mid. Ord. = 0.6176
P.C. Station 30+72.98 N 10,166,213.5261 E 3,118,896.7778
P.T. Station 31+94.84 N 10,166,327.0041 E 3,118,852.3845
C.C. N 10,167,365.0463 E 3,121,673.0509
Back = N 22° 31' 38.29" W
Ahead = N 20° 12' 15.40" W
Chord Bear = N 21° 21' 56.84" W

Course from PT SUP-EDGE34 to SUP103 N 20° 12' 15.40" W Dist 25.5366

Point SUP103 N 10,166,350.9693 E 3,118,843.5649 Sta 32+20.38

Course from SUP103 to PC SUP-EDGE35 N 20° 12' 15.39" W Dist 15.7507

Curve Data

Curve SUP-EDGE35
P.I. Station 32+47.55 N 10,166,376.4652 E 3,118,834.1821
Delta = 18° 31' 35.42" (LT)
Degree = 81° 51' 04.01"
Tangent = 11.4168
Length = 22.6344
Radius = 70.0000
External = 0.9249
Long Chord = 22.5359
Mid. Ord. = 0.9129
P.C. Station 32+36.13 N 10,166,365.7508 E 3,118,838.1252
P.T. Station 32+58.77 N 10,166,385.3714 E 3,118,827.0391
C.C. N 10,166,341.5751 E 3,118,772.4324
Back = N 20° 12' 15.40" W
Ahead = N 38° 43' 50.92" W
Chord Bear = N 29° 28' 03.11" W

Course from PT SUP-EDGE35 to PC SUP-EDGE36 N 38° 43' 50.82" W Dist 42.0640

Curve Data

Curve SUP-EDGE36
P.I. Station 34+89.81 N 10,166,569.5929 E 3,118,687.6333
Delta = 28° 17' 06.39" (RT)
Degree = 7° 38' 21.97"
Tangent = 188.9792
Length = 370.2511
Radius = 750.0000
External = 23.4424
Long Chord = 366.5029
Mid. Ord. = 22.7319
P.C. Station 33+00.83 N 10,166,418.1853 E 3,118,800.7212
P.T. Station 36+71.08 N 10,166,756.5103 E 3,118,659.7939
C.C. N 10,166,866.9962 E 3,119,401.6112
Back = N 36° 45' 23.16" W
Ahead = N 8° 28' 16.79" W
Chord Bear = N 22° 36' 49.97" W

Curve Data

Curve SUP-EDGE37
P.I. Station 36+87.87 N 10,166,773.1139 E 3,118,657.3210
Delta = 9° 35' 44.23" (RT)
Degree = 28° 38' 52.40"
Tangent = 16.7868
Length = 33.4950
Radius = 200.0000
External = 0.7033
Long Chord = 33.4559
Mid. Ord. = 0.7008
P.C. Station 36+71.08 N 10,166,756.5103 E 3,118,659.7939
P.T. Station 37+04.58 N 10,166,789.8975 E 3,118,657.6504
C.C. N 10,166,785.9732 E 3,118,857.6119
Back = N 8° 28' 16.79" W
Ahead = N 1° 07' 27.45" E
Chord Bear = N 3° 40' 24.67" W

Curve Data

Curve SUP-EDGE38
P.I. Station 37+44.12 N 10,166,829.4342 E 3,118,658.4263
Delta = 21° 19' 42.84" (LT)
Degree = 27° 17' 01.33"
Tangent = 39.5443
Length = 78.1733
Radius = 210.0000
External = 3.6908
Long Chord = 77.7227
Mid. Ord. = 3.6270
P.C. Station 37+04.58 N 10,166,789.8975 E 3,118,657.6504
P.T. Station 37+82.75 N 10,166,866.5453 E 3,118,644.7689
C.C. N 10,166,794.0180 E 3,118,447.6908
Back = N 1° 07' 27.45" E
Ahead = N 20° 12' 15.40" W
Chord Bear = N 9° 32' 23.97" W

Course from PT SUP-EDGE38 to PC SUP-EDGE39 N 20° 12' 15.40" W Dist 145.2703

Curve Data

Curve SUP-EDGE39
P.I. Station 40+04.87 N 10,167,074.9973 E 3,118,568.0559
Delta = 8° 30' 48.18" (RT)
Degree = 5° 32' 57.22"
Tangent = 76.8493
Length = 153.4157
Radius = 1,032.5000
External = 2.8560
Long Chord = 153.2746
Mid. Ord. = 2.8481
P.C. Station 39+28.02 N 10,167,002.8767 E 3,118,594.5972
P.T. Station 40+81.44 N 10,167,150.2523 E 3,118,552.4838
C.C. N 10,167,359.4694 E 3,119,563.5646
Back = N 20° 12' 15.40" W
Ahead = N 11° 41' 27.21" W
Chord Bear = N 15° 56' 51.30" W

Curve Data

Curve SUP-EDGE40
P.I. Station 40+87.09 N 10,167,155.7637 E 3,118,551.2014
Delta = 10° 46' 30.96" (RT)
Degree = 95° 29' 34.67"
Tangent = 5.6586
Length = 11.2838
Radius = 60.0000
External = 0.2662
Long Chord = 11.2672
Mid. Ord. = 0.2651
P.C. Station 40+81.44 N 10,167,150.2523 E 3,118,552.4838
P.T. Station 40+92.72 N 10,167,161.4176 E 3,118,550.9720
C.C. N 10,167,163.8501 E 3,118,610.9226
Back = N 13° 05' 55.39" W
Ahead = N 2° 19' 24.43" W
Chord Bear = N 7° 42' 39.91" W

Curve Data

Curve SUP-EDGE41
P.I. Station 40+98.52 N 10,167,167.2142 E 3,118,550.7368
Delta = 11° 02' 43.76" (LT)
Degree = 95° 29' 34.69"
Tangent = 5.8014
Length = 11.5668
Radius = 60.0000
External = 0.2798
Long Chord = 11.5489
Mid. Ord. = 0.2785
P.C. Station 40+92.72 N 10,167,161.4176 E 3,118,550.9720
P.T. Station 41+04.29 N 10,167,172.8584 E 3,118,549.3954
C.C. N 10,167,158.9852 E 3,118,491.0213
Back = N 2° 19' 24.43" W
Ahead = N 13° 22' 08.19" W
Chord Bear = N 7° 50' 46.31" W

Curve Data

Curve SUP-EDGE42
P.I. Station 42+56.51 N 10,167,320.8491 E 3,118,513.7579
Delta = 16° 42' 21.79" (RT)
Degree = 5° 31' 35.90"
Tangent = 152.2211
Length = 302.2823
Radius = 1,036.7200
External = 11.1157
Long Chord = 301.2126
Mid. Ord. = 10.9978
P.C. Station 41+04.29 N 10,167,172.8584 E 3,118,549.3954
P.T. Station 44+06.57 N 10,167,472.8378 E 3,118,522.1663
C.C. N 10,167,415.5716 E 3,119,557.3034
Back = N 13° 32' 22.36" W
Ahead = N 3° 09' 59.43" E
Chord Bear = N 5° 11' 11.46" W

Curve Data

Curve SUP-EDGE43
P.I. Station 44+14.11 N 10,167,480.3696 E 3,118,522.5533
Delta = 14° 19' 43.07" (LT)
Degree = 95° 29' 34.72"
Tangent = 7.5418
Length = 15.0049
Radius = 60.0000
External = 0.4721
Long Chord = 14.9658
Mid. Ord. = 0.4684
P.C. Station 44+06.57 N 10,167,472.8378 E 3,118,522.1663
P.T. Station 44+21.57 N 10,167,487.7630 E 3,118,521.0643
C.C. N 10,167,475.9168 E 3,118,462.2453
Back = N 2° 56' 29.49" E
Ahead = N 11° 23' 13.58" W
Chord Bear = N 4° 13' 22.05" W

Curve Data

Curve SUP-EDGE44
P.I. Station 44+31.19 N 10,167,497.1107 E 3,118,518.8066
Delta = 18° 12' 40.32" (RT)
Degree = 95° 29' 34.64"
Tangent = 9.6165
Length = 19.0707
Radius = 60.0000
External = 0.7657
Long Chord = 18.9906
Mid. Ord. = 0.7561
P.C. Station 44+21.57 N 10,167,487.7630 E 3,118,521.0643
P.T. Station 44+40.64 N 10,167,506.6957 E 3,118,519.5833
C.C. N 10,167,501.8495 E 3,118,579.3873
Back = N 13° 34' 41.97" W
Ahead = N 4° 37' 58.34" E
Chord Bear = N 4° 28' 21.82" W

Course from PT SUP-EDGE44 to PC SUP-EDGE45 N 4° 37' 58.40" E Dist 0.9279

Curve Data

Curve SUP-EDGE45
P.I. Station 44+93.39 N 10,167,559.2387 E 3,118,524.2373
Delta = 5° 41' 44.57" (RT)
Degree = 5° 30' 00.41"
Tangent = 51.8208
Length = 103.5563
Radius = 1,041.7200
External = 1.2881
Long Chord = 103.5137
Mid. Ord. = 1.2865
P.C. Station 44+41.57 N 10,167,507.6205 E 3,118,519.6582
P.T. Station 45+45.13 N 10,167,610.1475 E 3,118,533.9165
C.C. N 10,167,415.5716 E 3,119,557.3034
Back = N 5° 04' 09.88" E
Ahead = N 10° 45' 54.44" E
Chord Bear = N 7° 55' 02.16" E

Curve Data

Curve SUP-EDGE46
P.I. Station 45+54.09 N 10,167,618.9536 E 3,118,535.5908
Delta = 16° 59' 38.20" (RT)
Degree = 95° 29' 34.68"
Tangent = 8.9638
Length = 17.7960
Radius = 60.0000
External = 0.6659
Long Chord = 17.7309
Mid. Ord. = 0.6586
P.C. Station 45+45.13 N 10,167,610.1475 E 3,118,533.9165
P.T. Station 45+62.92 N 10,167,626.8858 E 3,118,539.7658
C.C. N 10,167,598.9405 E 3,118,592.8606
Back = N 10° 45' 54.44" E
Ahead = N 27° 45' 32.64" E
Chord Bear = N 19° 15' 43.54" E

Course from PT SUP-EDGE46 to PC SUP-EDGE47 N 27° 45' 32.64" E Dist 9.2962

Curve Data

Curve SUP-EDGE47
P.I. Station 45+99.27 N 10,167,661.5491 E 3,118,549.8238
Delta = 2° 59' 21.42" (RT)
Degree = 5° 31' 35.90"
Tangent = 27.0505
Length = 54.0886
Radius = 1,036.7200
External = 0.3528
Long Chord = 54.0825
Mid. Ord. = 0.3527
P.C. Station 45+72.22 N 10,167,635.1121 E 3,118,544.0955
P.T. Station 46+26.31 N 10,167,687.6514 E 3,118,556.9230
C.C. N 10,167,415.5716 E 3,119,557.3034
Back = N 12° 13' 32.81" E
Ahead = N 15° 12' 54.23" E
Chord Bear = N 13° 43' 13.52" E

Curve Data

Curve SUP-EDGE48
P.I. Station 46+40.69 N 10,167,701.5287 E 3,118,560.6973
Delta = 1° 35' 22.25" (RT)
Degree = 5° 31' 35.90"
Tangent = 14.3814
Length = 28.7610
Radius = 1,036.7200
External = 0.0997
Long Chord = 28.7600
Mid. Ord. = 0.0997
P.C. Station 46+26.31 N 10,167,687.6514 E 3,118,556.9230
P.T. Station 46+55.07 N 10,167,715.2959 E 3,118,564.8551
C.C. N 10,167,415.5716 E 3,119,557.3034
Back = N 15° 12' 54.23" E
Ahead = N 16° 48' 16.49" E
Chord Bear = N 16° 00' 35.36" E

Course from PT SUP-EDGE48 to PC SUP-EDGE49 S 75° 53' 48.59" E Dist 0.4644

Curve Data

Curve SUP-EDGE49
P.I. Station 46+63.59 N 10,167,722.9928 E 3,118,567.2677
Delta = 27° 01' 57.52" (LT)
Degree = 171° 01' 55.84"
Tangent = 8.0527
Length = 15.8056
Radius = 33.5000
External = 0.9543
Long Chord = 15.6594
Mid. Ord. = 0.9278
P.C. Station 46+55.53 N 10,167,715.1828 E 3,118,565.3055
P.T. Station 46+71.34 N 10,167,730.8413 E 3,118,565.4659
C.C. N 10,167,723.3456 E 3,118,532.8153
Back = N 14° 06' 11.28" E
Ahead = N 12° 55' 46.25" W
Chord Bear = N 0° 35' 12.52" E

==========

Ending chain SUP-EDGE description

WYOMING SPRINGS
SEGMENT 1
ROUND ROCK, TX

ROUND ROCK
TEXAS

halff
13620 BRANTWICK DR
BLDG C, STE 150
AUSTIN, TX 78729
(512) 777-4800
TBPELS FIRM #312

No.	Revision	Date	Description

F-312 4/17/23
STATE OF TEXAS
JEFFREY L. NAGY
133255
LICENSED
PROFESSIONAL ENGINEER

100% SUBMITTAL

Project No.:	36179.002
Issued:	4/17/2023
Drawn By:	SG
Checked By:	JN
Scale:	N.T.S

Sheet Title
HORIZONTAL ALIGNMENT DATA SHEET (3 OF 8)

79
Sheet Number

USER: JASON.JENTHOUGH@HALFF.COM
DWG: C:\Users\JASON.JENTHOUGH\Halff Associates Inc\Halff Projects - Documents\36179.002\Design\Roadway\Alignment\SUP\SUP-ALIGNMENT.dwg
XREF: C:\Users\JASON.JENTHOUGH\Halff Associates Inc\Halff Projects - Documents\36179.002\Design\Roadway\Alignment\SUP\SUP-ALIGNMENT.dwg
PLOT: 4/17/2023 11:33:07 AM

Curve Data
————
Curve SUP-EDGE29
P.I. Station 22+55.37 N 10,165,470.2241 E 3,119,236.8145
Delta = 2° 59' 14.5682" (RT)
Degree = 5° 33' 45.7093"
Tangent = 26.8580
Length = 53.7038
Radius = 1,030.0000
External = 0.3501
Long Chord = 53.6977
Mid. Ord. = 0.3500
P.C. Station 22+28.52 N 10,165,446.3558 E 3,119,249.1293
P.T. Station 22+82.22 N 10,165,494.7017 E 3,119,225.7603
C.C. N 10,165,918.6277 E 3,120,164.4758
Back = N 27° 17' 29.1106" W
Ahead = N 24° 18' 14.5425" W
Chord Bear = N 25° 47' 51.8266" W

Course from PT SUP-EDGE29 to SUPEDGE03 N 24° 18' 14.5427" W Dist 172.7094

Point SUPEDGE03 N 10,165,652.1046 E 3,119,154.6768 Sta 24+54.93

Course from SUPEDGE03 to SUPEDGE04 N 2° 30' 09.4710" W Dist 5.3852

Point SUPEDGE04 N 10,165,657.4846 E 3,119,154.4417 Sta 24+60.31

Course from SUPEDGE04 to SUPEDGE05 N 24° 18' 14.5423" W Dist 59.7351

Point SUPEDGE05 N 10,165,711.9257 E 3,119,129.8560 Sta 25+20.05

Course from SUPEDGE05 to PC SUP-EDGE30 N 24° 18' 14.5424" W Dist 457.6071

Curve Data
————
Curve SUP-EDGE30
P.I. Station 30+08.82 N 10,166,157.3800 E 3,118,928.6878
Delta = 1° 10' 42.9265" (RT)
Degree = 1° 53' 27.4193"
Tangent = 31.1651
Length = 62.3280
Radius = 3,030.0000
External = 0.1603
Long Chord = 62.3269
Mid. Ord. = 0.1603
P.C. Station 29+77.66 N 10,166,128.9769 E 3,118,941.5147
P.T. Station 30+39.98 N 10,166,186.0409 E 3,118,916.4479
C.C. N 10,167,376.0601 E 3,121,702.9787
Back = N 24° 18' 14.5425" W
Ahead = N 23° 07' 31.6160" W
Chord Bear = N 23° 42' 53.0793" W

Course from PT SUP-EDGE30 to PC SUP-EDGE31 N 68° 44' 42.7373" W Dist 10.4283

Curve Data
————
Curve SUP-EDGE31
P.I. Station 31+24.21 N 10,166,257.7455 E 3,118,877.8725
Delta = 2° 48' 47.2097" (RT)
Degree = 1° 54' 22.6606"
Tangent = 73.7997
Length = 147.5697
Radius = 3,005.6099
External = 0.9059
Long Chord = 147.5549
Mid. Ord. = 0.9056
P.C. Station 30+50.41 N 10,166,189.8213 E 3,118,906.7290
P.T. Station 31+97.98 N 10,166,327.0041 E 3,118,852.3845
C.C. N 10,167,365.0463 E 3,121,673.0509
Back = N 23° 01' 02.6051" W
Ahead = N 20° 12' 15.3953" W
Chord Bear = N 21° 36' 39.0002" W

Course from PT SUP-EDGE31 to SUPEDGE06 N 20° 12' 15.3955" W Dist 25.5366

Point SUPEDGE06 N 10,166,350.9693 E 3,118,843.5649 Sta 32+23.52

Course from SUPEDGE06 to PC SUP-EDGE32 N 20° 12' 15.3929" W Dist 15.7507

Curve Data
————
Curve SUP-EDGE32
P.I. Station 32+50.69 N 10,166,376.4652 E 3,118,834.1821
Delta = 18° 31' 35.4225" (LT)
Degree = 81° 51' 04.0089"
Tangent = 11.4168
Length = 22.6344
Radius = 70.0000
External = 0.9249
Long Chord = 22.5359
Mid. Ord. = 0.9129
P.C. Station 32+39.27 N 10,166,365.7508 E 3,118,838.1252
P.T. Station 32+61.90 N 10,166,385.3714 E 3,118,827.0391
C.C. N 10,166,341.5751 E 3,118,772.4324
Back = N 20° 12' 15.3954" W
Ahead = N 38° 43' 50.8179" W
Chord Bear = N 29° 28' 03.1066" W

Course from PT SUP-EDGE32 to PC SUP-EDGE33 N 38° 43' 50.8182" W Dist 42.0640

Curve Data
————
Curve SUP-EDGE33
P.I. Station 34+92.95 N 10,166,569.5929 E 3,118,687.6333
Delta = 28° 17' 06.3754" (RT)
Degree = 7° 38' 21.9742"
Tangent = 188.9792
Length = 370.2511
Radius = 750.0000
External = 23.4424
Long Chord = 366.5029
Mid. Ord. = 22.7319
P.C. Station 33+03.97 N 10,166,418.1853 E 3,118,800.7212
P.T. Station 36+74.22 N 10,166,756.5103 E 3,118,659.7939
C.C. N 10,166,866.9962 E 3,119,401.6112
Back = N 36° 45' 23.1622" W
Ahead = N 8° 28' 16.7868" W
Chord Bear = N 22° 36' 49.9745" W

Curve Data
————
Curve SUP-EDGE34
P.I. Station 36+91.01 N 10,166,773.1139 E 3,118,657.3210
Delta = 9° 35' 44.2345" (RT)
Degree = 28° 38' 52.4043"
Tangent = 16.7868
Length = 33.4950
Radius = 200.0000
External = 0.7033
Long Chord = 33.4559
Mid. Ord. = 0.7008
P.C. Station 36+74.22 N 10,166,756.5103 E 3,118,659.7939
P.T. Station 37+07.71 N 10,166,789.8975 E 3,118,657.6504
C.C. N 10,166,785.9732 E 3,118,857.6119
Back = N 8° 28' 16.7868" W
Ahead = N 1° 07' 27.4477" E
Chord Bear = N 3° 40' 24.6696" W

Curve Data
————
Curve SUP-EDGE35
P.I. Station 37+47.26 N 10,166,829.4342 E 3,118,658.4263
Delta = 21° 19' 42.8430" (LT)
Degree = 27° 17' 01.3349"
Tangent = 39.5443
Length = 78.1733
Radius = 210.0000
External = 3.6908
Long Chord = 77.7227
Mid. Ord. = 3.6270
P.C. Station 37+07.71 N 10,166,789.8975 E 3,118,657.6504
P.T. Station 37+85.89 N 10,166,866.5453 E 3,118,644.7689
C.C. N 10,166,794.0180 E 3,118,447.6908
Back = N 1° 07' 27.4477" E
Ahead = N 20° 12' 15.3953" W
Chord Bear = N 9° 32' 23.9738" W

Course from PT SUP-EDGE35 to PC SUP-EDGE36 N 20° 12' 15.3958" W Dist 145.2703

Curve Data
————
Curve SUP-EDGE36
P.I. Station 40+06.43 N 10,167,073.5153 E 3,118,568.6012
Delta = 8° 20' 20.6610" (RT)
Degree = 5° 32' 57.2209"
Tangent = 75.2701
Length = 150.2745
Radius = 1,032.5000
External = 2.7400
Long Chord = 150.1419
Mid. Ord. = 2.7327
P.C. Station 39+31.16 N 10,167,002.8767 E 3,118,594.5972
P.T. Station 40+81.43 N 10,167,147.1772 E 3,118,553.1249
C.C. N 10,167,359.4694 E 3,119,563.5646
Back = N 20° 12' 15.3953" W
Ahead = N 11° 51' 54.7343" W
Chord Bear = N 16° 02' 05.0648" W

Curve Data
————
Curve SUP-EDGE37
P.I. Station 40+89.01 N 10,167,154.5954 E 3,118,551.5664
Delta = 0° 51' 36.0075" (LT)
Degree = 5° 40' 22.2561"
Tangent = 7.5801
Length = 15.1600
Radius = 1,010.0001
External = 0.0284
Long Chord = 15.1598
Mid. Ord. = 0.0284
P.C. Station 40+81.43 N 10,167,147.1772 E 3,118,553.1249
P.T. Station 40+96.59 N 10,167,161.9893 E 3,118,549.8967
C.C. N 10,166,939.5112 E 3,117,564.7045
Back = N 11° 51' 54.7343" W
Ahead = N 12° 43' 30.7419" W
Chord Bear = N 12° 17' 42.7381" W

Course from PT SUP-EDGE37 to PC SUP-EDGE38 N 8° 55' 50.8191" E Dist 5.4232

Curve Data
————
Curve SUP-EDGE38
P.I. Station 42+61.50 N 10,167,322.1917 E 3,118,512.5529
Delta = 17° 29' 27.8763" (RT)
Degree = 5° 31' 35.9031"
Tangent = 159.4838
Length = 316.4866
Radius = 1,036.7200
External = 12.1954
Long Chord = 315.2591
Mid. Ord. = 12.0536
P.C. Station 41+02.02 N 10,167,167.3467 E 3,118,550.7386
P.T. Station 44+18.50 N 10,167,481.3541 E 3,118,522.6726
C.C. N 10,167,415.5716 E 3,119,557.3034
Back = N 13° 51' 11.0456" W
Ahead = N 3° 38' 16.8307" E
Chord Bear = N 5° 06' 27.1074" W

Course from PT SUP-EDGE38 to SUPEDGE07 N 14° 06' 35.3929" W Dist 15.9531

Point SUPEDGE07 N 10,167,496.8259 E 3,118,518.7835 Sta 44+34.46

Course from SUPEDGE07 to PC SUP-EDGE39 N 4° 37' 58.3458" E Dist 10.8300

Curve Data
————
Curve SUP-EDGE39
P.I. Station 44+97.11 N 10,167,559.2387 E 3,118,524.2373
Delta = 5° 41' 44.5691" (RT)
Degree = 5° 30' 00.4076"
Tangent = 51.8208
Length = 103.5563
Radius = 1,041.7200
External = 1.2881
Long Chord = 103.5137
Mid. Ord. = 1.2865
P.C. Station 44+45.29 N 10,167,507.6205 E 3,118,519.6582
P.T. Station 45+48.84 N 10,167,610.1475 E 3,118,533.9165
C.C. N 10,167,415.5716 E 3,119,557.3034
Back = N 5° 04' 09.8752" E
Ahead = N 10° 45' 54.4443" E
Chord Bear = N 7° 55' 02.1597" E

Curve Data
————
Curve SUP-EDGE40
P.I. Station 45+57.81 N 10,167,618.9536 E 3,118,535.5908
Delta = 16° 59' 38.1967" (RT)
Degree = 95° 29' 34.6760"
Tangent = 8.9638
Length = 17.7960
Radius = 60.0000
External = 0.6659
Long Chord = 17.7309
Mid. Ord. = 0.6586
P.C. Station 45+48.84 N 10,167,610.1475 E 3,118,533.9165
P.T. Station 45+66.64 N 10,167,626.8858 E 3,118,539.7658
C.C. N 10,167,598.9405 E 3,118,592.8606
Back = N 10° 45' 54.4443" E
Ahead = N 27° 45' 32.6410" E
Chord Bear = N 19° 15' 43.5426" E

Course from PT SUP-EDGE40 to PC SUP-EDGE41 N 27° 45' 32.6396" E Dist 9.2962

Curve Data
————
Curve SUP-EDGE41
P.I. Station 46+02.98 N 10,167,661.5491 E 3,118,549.8238
Delta = 2° 59' 21.4240" (RT)
Degree = 5° 31' 35.9030"
Tangent = 27.0505
Length = 54.0886
Radius = 1,036.7200
External = 0.3528
Long Chord = 54.0825
Mid. Ord. = 0.3527
P.C. Station 45+75.93 N 10,167,635.1121 E 3,118,544.0955
P.T. Station 46+30.02 N 10,167,687.6514 E 3,118,556.9230
C.C. N 10,167,415.5716 E 3,119,557.3034
Back = N 12° 13' 32.8101" E
Ahead = N 15° 12' 54.2341" E
Chord Bear = N 13° 43' 13.5221" E

Curve Data
————
Curve SUP-EDGE42
P.I. Station 46+44.40 N 10,167,701.5287 E 3,118,560.6973
Delta = 1° 35' 22.2511" (RT)
Degree = 5° 31' 35.9028"
Tangent = 14.3814
Length = 28.7610
Radius = 1,036.7200
External = 0.0997
Long Chord = 28.7600
Mid. Ord. = 0.0997
P.C. Station 46+30.02 N 10,167,687.6514 E 3,118,556.9230
P.T. Station 46+58.78 N 10,167,715.2959 E 3,118,564.8551
C.C. N 10,167,415.5716 E 3,119,557.3034
Back = N 15° 12' 54.2341" E
Ahead = N 16° 48' 16.4851" E
Chord Bear = N 16° 00' 35.3596" E

Course from PT SUP-EDGE42 to PC SUP-EDGE43 S 75° 53' 48.5915" E Dist 0.4644

Curve Data
————
Curve SUP-EDGE43
P.I. Station 46+67.30 N 10,167,722.9928 E 3,118,567.2677
Delta = 27° 01' 57.5223" (LT)
Degree = 171° 01' 55.8395"
Tangent = 8.0527
Length = 15.8056
Radius = 33.5000
External = 0.9543
Long Chord = 15.6594
Mid. Ord. = 0.9278
P.C. Station 46+59.25 N 10,167,715.1828 E 3,118,565.3055
P.T. Station 46+75.05 N 10,167,730.8413 E 3,118,565.4659
C.C. N 10,167,723.3456 E 3,118,532.8153
Back = N 14° 06' 11.2772" E
Ahead = N 12° 55' 46.2451" W
Chord Bear = N 0° 35' 12.5161" E

==========
Ending chain SUP-EDGE description

WYOMING SPRINGS
SEGMENT 1
ROUND ROCK, TX

ROUND ROCK
TEXAS

halff
13620 BRANTWICK DR
BLDG C, STE 100
AUSTIN, TX 78729
(512) 777-4600
TBPELS FIRM #312

Revision		
No.	Date	Description

F-312 4/5/23
STATE OF TEXAS
JEFFREY L. NAGY
133255
LICENSED
PROFESSIONAL ENGINEER

100% SUBMITTAL

Project No.:	36179.002
Issued:	4/17/2023
Drawn By:	SG
Checked By:	JN
Scale:	N.T.S

Sheet Title
HORIZONTAL ALIGNMENT DATA SHEET (4 OF 8)

80
Sheet Number

4/17/2023 11:30:52 AM JHALFF
P:\Projects\36000\36179\002\CAD\Sheets\ASSETS\Horiz\Horiz Data Sheets.dgn

Beginning chain SDWK-EDGE-1 description

Curve Data
Curve SDWK-EDGE-11
P.I. Station 1+03.92 N 10,163,448.1768 E 3,119,923.8850
Delta = 42° 44' 32.42" (RT)
Degree = 572° 08' 50.45"
Tangent = 3.9187
Length = 7.4705
Radius = 10.0142
External = 0.7394
Long Chord = 7.2985
Mid. Ord. = 0.6886
P.C. Station 1+00.00 N 10,163,449.1760 E 3,119,927.6742
P.T. Station 1+07.47 N 10,163,450.0147 E 3,119,920.4241
C.C. N 10,163,458.8592 E 3,119,925.1208
Back = S 75° 13' 40.28" W
Ahead = N 62° 01' 47.30" W
Chord Bear = N 83° 24' 03.51" W

Curve Data
Curve SDWK-EDGE-12
P.I. Station 1+17.10 N 10,163,454.2110 E 3,119,911.7564
Delta = 48° 04' 56.18" (RT)
Degree = 265° 24' 33.33"
Tangent = 9.6300
Length = 18.1163
Radius = 21.5877
External = 2.0505
Long Chord = 17.5893
Mid. Ord. = 1.8727
P.C. Station 1+07.47 N 10,163,450.0147 E 3,119,920.4241
P.T. Station 1+25.59 N 10,163,463.4640 E 3,119,909.0883
C.C. N 10,163,469.4452 E 3,119,929.8309
Back = N 64° 10' 01.70" W
Ahead = N 16° 05' 05.53" W
Chord Bear = N 40° 07' 33.62" W

Curve Data
Curve SDWK-EDGE-13
P.I. Station 1+27.59 N 10,163,465.4241 E 3,119,908.6970
Delta = 43° 34' 38.89" (LT)
Degree = 1145° 54' 56.42"
Tangent = 1.9987
Length = 3.8029
Radius = 5.0000
External = 0.3847
Long Chord = 3.7119
Mid. Ord. = 0.3572
P.C. Station 1+25.59 N 10,163,463.4640 E 3,119,909.0883
P.T. Station 1+29.39 N 10,163,466.5743 E 3,119,907.0624
C.C. N 10,163,462.4853 E 3,119,904.1850
Back = N 11° 17' 20.20" W
Ahead = N 54° 51' 59.09" W
Chord Bear = N 33° 04' 39.64" W

Curve Data
Curve SDWK-EDGE-14
P.I. Station 1+41.33 N 10,163,473.4466 E 3,119,897.2963
Delta = 49° 20' 18.17" (RT)
Degree = 220° 22' 06.17"
Tangent = 11.9417
Length = 22.3890
Radius = 26.0000
External = 2.6113
Long Chord = 21.7037
Mid. Ord. = 2.3729
P.C. Station 1+29.39 N 10,163,466.5743 E 3,119,907.0624
P.T. Station 1+51.78 N 10,163,485.3328 E 3,119,896.1460
C.C. N 10,163,487.8374 E 3,119,922.0250
Back = N 54° 51' 59.09" W
Ahead = N 5° 31' 40.92" W
Chord Bear = N 30° 11' 50.01" W

Curve Data
Curve SDWK-EDGE-15
P.I. Station 1+60.25 N 10,163,493.7658 E 3,119,895.3298
Delta = 0° 59' 22.71" (RT)
Degree = 5° 50' 25.97"
Tangent = 8.4724
Length = 16.9443
Radius = 981.0000
External = 0.0366
Long Chord = 16.9441
Mid. Ord. = 0.0366
P.C. Station 1+51.78 N 10,163,485.3328 E 3,119,896.1460
P.T. Station 1+68.72 N 10,163,502.2116 E 3,119,894.6594
C.C. N 10,163,579.8352 E 3,120,872.5835
Back = N 5° 31' 40.92" W
Ahead = N 4° 32' 18.21" W
Chord Bear = N 5° 01' 59.57" W

Course from PT SDWK-EDGE-15 to PC SDWK-EDGE-16 N 4° 32' 18.21" W Dist 34.8819

Curve Data
Curve SDWK-EDGE-16
P.I. Station 2+56.20 N 10,163,589.4049 E 3,119,887.5695
Delta = 6° 18' 30.14" (RT)
Degree = 6° 00' 09.72"
Tangent = 52.5993
Length = 105.0922
Radius = 954.5000
External = 1.4482
Long Chord = 105.0391
Mid. Ord. = 1.4460
P.C. Station 2+03.60 N 10,163,536.9842 E 3,119,891.8993
P.T. Station 3+08.70 N 10,163,641.9840 E 3,119,889.0259
C.C. N 10,163,615.5554 E 3,120,843.1599
Back = N 4° 43' 18.25" W
Ahead = N 1° 35' 11.89" E
Chord Bear = N 1° 34' 03.18" W

Course from PT SDWK-EDGE-16 to PC SDWK-EDGE-17 N 1° 35' 11.89" E Dist 269.5838

Curve Data
Curve SDWK-EDGE-17
P.I. Station 6+54.93 N 10,163,988.0820 E 3,119,898.6125
Delta = 8° 06' 41.03" (LT)
Degree = 5° 18' 00.93"
Tangent = 76.6470
Length = 153.0378
Radius = 1,081.0000
External = 2.7139
Long Chord = 152.9101
Mid. Ord. = 2.7071
P.C. Station 5+78.28 N 10,163,911.4644 E 3,119,896.4902
P.T. Station 7+31.32 N 10,164,064.2325 E 3,119,889.9029
C.C. N 10,163,941.3956 E 3,118,815.9047
Back = N 1° 35' 11.89" E
Ahead = N 6° 31' 29.15" W
Chord Bear = N 2° 28' 08.63" W

Curve Data
Curve SDWK-EDGE-18
P.I. Station 7+33.79 N 10,164,066.6841 E 3,119,889.6274
Delta = 19° 59' 17.41" (LT)
Degree = 409° 15' 19.87"
Tangent = 2.4671
Length = 4.8840
Radius = 14.0000
External = 0.2157
Long Chord = 4.8593
Mid. Ord. = 0.2124
P.C. Station 7+31.32 N 10,164,064.2325 E 3,119,889.9029
P.T. Station 7+36.20 N 10,164,068.8939 E 3,119,888.5304
C.C. N 10,164,062.6690 E 3,119,875.9905
Back = N 6° 24' 43.93" W
Ahead = N 26° 24' 01.34" W
Chord Bear = N 16° 24' 22.64" W

Curve Data
Curve SDWK-EDGE-19
P.I. Station 7+41.57 N 10,164,073.5127 E 3,119,885.7918
Delta = 23° 20' 17.02" (RT)
Degree = 220° 22' 18.04"
Tangent = 5.3696
Length = 10.5903
Radius = 25.9996
External = 0.5487
Long Chord = 10.5173
Mid. Ord. = 0.5374
P.C. Station 7+36.20 N 10,164,068.8939 E 3,119,888.5304
P.T. Station 7+46.79 N 10,164,078.8384 E 3,119,885.1070
C.C. N 10,164,082.1543 E 3,119,910.8943
Back = N 30° 39' 54.93" W
Ahead = N 7° 19' 37.91" W
Chord Bear = N 18° 59' 46.42" W

Curve Data
Curve SDWK-EDGE-110
P.I. Station 7+83.29 N 10,164,115.0372 E 3,119,880.4523
Delta = 3° 52' 27.74" (LT)
Degree = 5° 18' 35.46"
Tangent = 36.4968
Length = 72.9657
Radius = 1,079.0472
External = 0.6170
Long Chord = 72.9518
Mid. Ord. = 0.6167
P.C. Station 7+46.79 N 10,164,078.8384 E 3,119,885.1070
P.T. Station 8+19.76 N 10,164,150.8387 E 3,119,873.3624
C.C. N 10,163,941.2217 E 3,118,814.8712
Back = N 7° 19' 37.91" W
Ahead = N 11° 12' 05.65" W
Chord Bear = N 9° 15' 51.78" W

Curve Data
Curve SDWK-EDGE-111
P.I. Station 8+24.19 N 10,164,155.1823 E 3,119,872.5022
Delta = 20° 17' 25.52" (RT)
Degree = 231° 32' 37.52"
Tangent = 4.4279
Length = 8.7631
Radius = 24.7451
External = 0.3930
Long Chord = 8.7174
Mid. Ord. = 0.3869
P.C. Station 8+19.76 N 10,164,150.8387 E 3,119,873.3624
P.T. Station 8+28.52 N 10,164,159.5546 E 3,119,873.2017
C.C. N 10,164,155.6457 E 3,119,897.6361
Back = N 11° 12' 05.65" W
Ahead = N 9° 05' 19.87" E
Chord Bear = N 1° 03' 22.89" W

Curve Data
Curve SDWK-EDGE-112
P.I. Station 8+31.97 N 10,164,162.9232 E 3,119,873.9288
Delta = 24° 14' 01.71" (LT)
Degree = 356° 56' 19.65"
Tangent = 3.4462
Length = 6.7893
Radius = 16.0520
External = 0.3658
Long Chord = 6.7389
Mid. Ord. = 0.3576
P.C. Station 8+28.52 N 10,164,159.5546 E 3,119,873.2017
P.T. Station 8+35.31 N 10,164,166.2934 E 3,119,873.2092
C.C. N 10,164,162.9413 E 3,119,857.5111
Back = N 12° 10' 48.66" E
Ahead = N 12° 03' 13.04" W
Chord Bear = N 0° 03' 47.81" E

Curve Data
Curve SDWK-EDGE-113
P.I. Station 9+24.44 N 10,164,253.4523 E 3,119,854.5977
Delta = 9° 20' 10.66" (LT)
Degree = 5° 14' 58.01"
Tangent = 89.1238
Length = 177.8530
Radius = 1,091.4634
External = 3.6327
Long Chord = 177.6563
Mid. Ord. = 3.6206
P.C. Station 8+35.31 N 10,164,166.2934 E 3,119,873.2092
P.T. Station 10+13.16 N 10,164,336.4372 E 3,119,822.0931
C.C. N 10,163,938.3664 E 3,118,805.8097
Back = N 12° 03' 13.04" W
Ahead = N 21° 23' 23.71" W
Chord Bear = N 16° 43' 18.38" W

Course from PT SDWK-EDGE-113 to PC SDWK-EDGE-114 N 21° 22' 57.51" W Dist 323.4055

Curve Data
Curve SDWK-EDGE-114
P.I. Station 13+54.87 N 10,164,654.6213 E 3,119,697.5068
Delta = 2° 00' 20.11" (LT)
Degree = 5° 28' 48.82"
Tangent = 18.3003
Length = 36.5968
Radius = 1,045.5000
External = 0.1601
Long Chord = 36.5949
Mid. Ord. = 0.1601
P.C. Station 13+36.57 N 10,164,637.5815 E 3,119,704.1812
P.T. Station 13+73.17 N 10,164,671.4170 E 3,119,690.2402
C.C. N 10,164,256.2741 E 3,118,730.6952
Back = N 21° 23' 23.71" W
Ahead = N 23° 23' 43.82" W
Chord Bear = N 22° 23' 33.76" W

Curve Data
Curve SDWK-EDGE-115
P.I. Station 13+81.59 N 10,164,679.1441 E 3,119,686.8971
Delta = 31° 21' 10.05" (RT)
Degree = 190° 59' 09.30"
Tangent = 8.4193
Length = 16.4163
Radius = 30.0000
External = 1.1590
Long Chord = 16.2122
Mid. Ord. = 1.1159
P.C. Station 13+73.17 N 10,164,671.4170 E 3,119,690.2402
P.T. Station 13+89.58 N 10,164,687.4823 E 3,119,688.0627
C.C. N 10,164,683.3292 E 3,119,717.7738
Back = N 23° 23' 43.82" W
Ahead = N 7° 57' 26.23" E
Chord Bear = N 7° 43' 08.79" W

Curve Data
Curve SDWK-EDGE-116
P.I. Station 13+97.81 N 10,164,695.6323 E 3,119,689.1592
Delta = 30° 06' 34.58" (LT)
Degree = 187° 24' 18.22"
Tangent = 8.2234
Length = 16.0666
Radius = 30.5732
External = 1.0866
Long Chord = 15.8824
Mid. Ord. = 1.0493
P.C. Station 13+89.58 N 10,164,687.4823 E 3,119,688.0627
P.T. Station 14+05.65 N 10,164,703.2326 E 3,119,686.0192
C.C. N 10,164,691.5589 E 3,119,657.7624
Back = N 7° 39' 45.39" E
Ahead = N 22° 26' 49.19" W
Chord Bear = N 7° 23' 31.90" W

Course from PT SDWK-EDGE-116 to SW101 N 22° 44' 30.01" W Dist 5.6847

Point SW101 N 10,164,708.4754 E 3,119,683.8217 Sta 14+11.33

Course from SW101 to SW102 N 22° 44' 30.02" W Dist 7.0538

Point SW102 N 10,164,714.9808 E 3,119,681.0948 Sta 14+18.39

Ending chain SDWK-EDGE-1 description

WYOMING SPRINGS
SEGMENT 1
ROUND ROCK, TX

ROUND ROCK
TEXAS

halff
13620 BRANTWICK DR
BLDG C, STE 100
AUSTIN, TX 78729
(512) 777-4600
TBPELS FIRM #312

Revision No.	Date	Description
.	.	.
.	.	.
.	.	.
.	.	.
.	.	.
.	.	.
.	.	.
.	.	.

STATE OF TEXAS
JEFFREY L. NAGY
133255
LICENSED
PROFESSIONAL ENGINEER
4/17/23

100% SUBMITTAL

Project No.:	36179.002
Issued:	4/17/2023
Drawn By:	SG
Checked By:	JN
Scale:	N.T.S

Sheet Title
HORIZONTAL ALIGNMENT DATA SHEET (5 OF 8)

81
Sheet Number

Beginning chain SDWK-EDGE-2 description

Point SW2100 N 10,164,772.5660 E 3,119,656.9572 Sta 1+00.00

Course from SW2100 to PC SDWK-EDGE-21 N 22° 44' 30.02" W Dist 11.2330

Curve Data

Curve SDWK-EDGE-21
P.I. Station 1+32.38 N 10,164,792.1042 E 3,119,633.5589
Delta = 38° 50' 13.39" (RT)
Degree = 95° 29' 34.68"
Tangent = 21.1511
Length = 40.6701
Radius = 60.0000
External = 3.6190
Long Chord = 39.8959
Mid. Ord. = 3.4131
P.C. Station 1+11.23 N 10,164,782.9257 E 3,119,652.6148
P.T. Station 1+51.90 N 10,164,811.2037 E 3,119,624.4715
C.C. N 10,164,836.9820 E 3,119,678.6516
Back = N 64° 16' 53.97" W
Ahead = N 25° 26' 40.58" W
Chord Bear = N 44° 51' 47.27" W

Course from PT SDWK-EDGE-21 to SW2101 N 25° 26' 40.58" W Dist 72.9435

Point SW2101 N 10,164,877.0718 E 3,119,593.1322 Sta 2+24.85

Course from SW2101 to SW2102 N 12° 38' 53.50" W Dist 18.0597

Point SW2102 N 10,164,894.6933 E 3,119,589.1778 Sta 2+42.91

Course from SW2102 to PC SDWK-EDGE-22 N 25° 26' 40.58" W Dist 85.0511

Curve Data

Curve SDWK-EDGE-22
P.I. Station 3+40.16 N 10,164,982.5107 E 3,119,547.3952
Delta = 1° 28' 14.48" (RT)
Degree = 6° 01' 40.66"
Tangent = 12.1996
Length = 24.3978
Radius = 950.5000
External = 0.0783
Long Chord = 24.3971
Mid. Ord. = 0.0783
P.C. Station 3+27.96 N 10,164,971.4945 E 3,119,552.6366
P.T. Station 3+52.36 N 10,164,993.6578 E 3,119,542.4383
C.C. N 10,165,379.8657 E 3,120,410.9391
Back = N 25° 26' 40.58" W
Ahead = N 23° 58' 26.10" W
Chord Bear = N 24° 42' 33.34" W

Course from PT SDWK-EDGE-22 to SW2103 N 23° 38' 39.92" W Dist 11.2606

Point SW2103 N 10,165,003.9731 E 3,119,537.9221 Sta 3+63.62

Course from SW2103 to SW2104 N 23° 17' 05.55" W Dist 10.7980

Point SW2104 N 10,165,013.8916 E 3,119,533.6536 Sta 3+74.41

Course from SW2104 to SW2105 N 23° 17' 42.73" W Dist 46.4928

Point SW2105 N 10,165,056.5943 E 3,119,515.2672 Sta 4+20.91

Course from SW2105 to SW2106 N 37° 44' 51.08" W Dist 16.0273

Point SW2106 N 10,165,069.2673 E 3,119,505.4555 Sta 4+36.93

Course from SW2106 to SW2107 N 23° 17' 42.73" W Dist 46.1622

Point SW2107 N 10,165,111.6663 E 3,119,487.1998 Sta 4+83.10

Course from SW2107 to PC SDWK-EDGE-23 N 23° 17' 42.73" W Dist 148.1378

Curve Data

Curve SDWK-EDGE-23
P.I. Station 6+31.91 N 10,165,248.3469 E 3,119,428.3495
Delta = 8° 33' 54.33" (LT)
Degree = 636° 37' 11.18"
Tangent = 0.6740
Length = 1.3454
Radius = 9.0000
External = 0.0252
Long Chord = 1.3441
Mid. Ord. = 0.0251
P.C. Station 6+31.23 N 10,165,247.7279 E 3,119,428.6160
P.T. Station 6+32.58 N 10,165,248.9193 E 3,119,427.9937
C.C. N 10,165,244.1686 E 3,119,420.3497
Back = N 23° 17' 42.73" W
Ahead = N 31° 51' 37.06" W
Chord Bear = N 27° 34' 39.89" W

Curve Data

Curve SDWK-EDGE-24
P.I. Station 6+34.04 N 10,165,250.1591 E 3,119,427.2232
Delta = 11° 06' 58.60" (LT)
Degree = 381° 58' 19.40"
Tangent = 1.4597
Length = 2.9102
Radius = 15.0000
External = 0.0709
Long Chord = 2.9057
Mid. Ord. = 0.0705
P.C. Station 6+32.58 N 10,165,248.9193 E 3,119,427.9937
P.T. Station 6+35.49 N 10,165,251.2270 E 3,119,426.2281
C.C. N 10,165,241.0015 E 3,119,415.2537
Back = N 31° 51' 37.06" W
Ahead = N 42° 58' 35.66" W
Chord Bear = N 37° 25' 06.36" W

Curve Data

Curve SDWK-EDGE-25
P.I. Station 6+38.95 N 10,165,253.7591 E 3,119,423.8689
Delta = 18° 43' 00.28" (RT)
Degree = 272° 50' 13.03"
Tangent = 3.4609
Length = 6.8600
Radius = 21.0000
External = 0.2833
Long Chord = 6.8296
Mid. Ord. = 0.2795
P.C. Station 6+35.49 N 10,165,251.2270 E 3,119,426.2281
P.T. Station 6+42.35 N 10,165,256.9143 E 3,119,422.4469
C.C. N 10,165,265.5427 E 3,119,441.5924
Back = N 42° 58' 35.66" W
Ahead = N 24° 15' 35.38" W
Chord Bear = N 33° 37' 05.52" W

Course from PT SDWK-EDGE-25 to PC SDWK-EDGE-26 N 24° 15' 35.38" W Dist 58.6106

Curve Data

Curve SDWK-EDGE-26
P.I. Station 7+04.09 N 10,165,313.2006 E 3,119,397.0802
Delta = 23° 33' 23.27" (RT)
Degree = 381° 58' 18.71"
Tangent = 3.1277
Length = 6.1671
Radius = 15.0000
External = 0.3226
Long Chord = 6.1237
Mid. Ord. = 0.3158
P.C. Station 7+00.96 N 10,165,310.3491 E 3,119,398.3653
P.T. Station 7+07.13 N 10,165,316.3281 E 3,119,397.0418
C.C. N 10,165,316.5122 E 3,119,412.0407
Back = N 24° 15' 35.38" W
Ahead = N 0° 42' 12.11" W
Chord Bear = N 12° 28' 53.74" W

Curve Data

Curve SDWK-EDGE-27
P.I. Station 7+09.00 N 10,165,318.2046 E 3,119,397.0187
Delta = 23° 33' 23.27" (LT)
Degree = 636° 37' 11.01"
Tangent = 1.8766
Length = 3.7002
Radius = 9.0000
External = 0.1936
Long Chord = 3.6742
Mid. Ord. = 0.1895
P.C. Station 7+07.13 N 10,165,316.3281 E 3,119,397.0418
P.T. Station 7+10.83 N 10,165,319.9155 E 3,119,396.2477
C.C. N 10,165,316.2176 E 3,119,388.0425
Back = N 0° 42' 12.11" W
Ahead = N 24° 15' 35.38" W
Chord Bear = N 12° 28' 53.74" W

Course from PT SDWK-EDGE-27 to PC SDWK-EDGE-28 N 24° 15' 35.38" W Dist 99.8379

Curve Data

Curve SDWK-EDGE-28
P.I. Station 8+34.62 N 10,165,432.7731 E 3,119,345.3858
Delta = 2° 38' 32.63" (LT)
Degree = 5° 31' 01.80"
Tangent = 23.9513
Length = 47.8941
Radius = 1,038.5000
External = 0.2762
Long Chord = 47.8898
Mid. Ord. = 0.2761
P.C. Station 8+10.67 N 10,165,410.9369 E 3,119,355.2268
P.T. Station 8+58.56 N 10,165,454.1323 E 3,119,334.5485
C.C. N 10,164,984.2430 E 3,118,408.4350
Back = N 24° 15' 35.38" W
Ahead = N 26° 54' 08.00" W
Chord Bear = N 25° 34' 51.69" W

Curve Data

Curve SDWK-EDGE-29
P.I. Station 8+62.75 N 10,165,457.8676 E 3,119,332.6534
Delta = 23° 39' 23.14" (LT)
Degree = 286° 28' 43.97"
Tangent = 4.1885
Length = 8.2577
Radius = 20.0000
External = 0.4339
Long Chord = 8.1991
Mid. Ord. = 0.4247
P.C. Station 8+58.56 N 10,165,454.1323 E 3,119,334.5485
P.T. Station 8+66.82 N 10,165,460.5285 E 3,119,329.4187
C.C. N 10,165,445.0829 E 3,119,316.7129
Back = N 26° 54' 08.00" W
Ahead = N 50° 33' 31.15" W
Chord Bear = N 38° 43' 49.57" W

Course from PT SDWK-EDGE-29 to PC SDWK-EDGE-210 N 50° 33' 31.18" W Dist 1.9898

Curve Data

Curve SDWK-EDGE-210
P.I. Station 8+72.85 N 10,165,464.3592 E 3,119,324.7619
Delta = 22° 50' 29.14" (RT)
Degree = 286° 28' 44.03"
Tangent = 4.0402
Length = 7.9732
Radius = 20.0000
External = 0.4040
Long Chord = 7.9205
Mid. Ord. = 0.3960
P.C. Station 8+68.81 N 10,165,461.7925 E 3,119,327.8821
P.T. Station 8+76.78 N 10,165,467.9359 E 3,119,322.8828
C.C. N 10,165,477.2380 E 3,119,340.5878
Back = N 50° 33' 31.15" W
Ahead = N 27° 43' 02.01" W
Chord Bear = N 39° 08' 16.58" W

Course from PT SDWK-EDGE-210 to PC SDWK-EDGE-211 N 27° 43' 02.01" W Dist 13.0749

Curve Data

Curve SDWK-EDGE-211
P.I. Station 8+93.90 N 10,165,483.0871 E 3,119,314.9224
Delta = 22° 50' 29.14" (RT)
Degree = 286° 28' 44.03"
Tangent = 4.0402
Length = 7.9732
Radius = 20.0000
External = 0.4040
Long Chord = 7.9205
Mid. Ord. = 0.3960
P.C. Station 8+89.85 N 10,165,479.5104 E 3,119,316.8015
P.T. Station 8+97.83 N 10,165,487.1127 E 3,119,314.5790
C.C. N 10,165,488.8126 E 3,119,334.5066
Back = N 27° 43' 02.01" W
Ahead = N 4° 52' 32.87" W
Chord Bear = N 16° 17' 47.44" W

Course from PT SDWK-EDGE-211 to PC SDWK-EDGE-212 N 4° 52' 32.86" W Dist 2.2552

Curve Data

Curve SDWK-EDGE-212
P.I. Station 9+04.12 N 10,165,493.3853 E 3,119,314.0439
Delta = 22° 50' 29.14" (LT)
Degree = 286° 28' 44.03"
Tangent = 4.0402
Length = 7.9732
Radius = 20.0000
External = 0.4040
Long Chord = 7.9205
Mid. Ord. = 0.3960
P.C. Station 9+00.08 N 10,165,489.3597 E 3,119,314.3873
P.T. Station 9+08.06 N 10,165,496.9620 E 3,119,312.1647
C.C. N 10,165,487.6598 E 3,119,294.4597
Back = N 4° 52' 32.87" W
Ahead = N 27° 43' 02.01" W
Chord Bear = N 16° 17' 47.44" W

Course from PT SDWK-EDGE-212 to SW2108 N 27° 43' 02.01" W Dist 78.8762

Point SW2108 N 10,165,566.7874 E 3,119,275.4788 Sta 9+86.93

Course from SW2108 to PC SDWK-EDGE-213 N 27° 43' 02.01" W Dist 105.1834

Curve Data

Curve SDWK-EDGE-213
P.I. Station 10+95.32 N 10,165,662.7348 E 3,119,225.0685
Delta = 0° 22' 42.60" (RT)
Degree = 5° 54' 46.36"
Tangent = 3.2007
Length = 6.4013
Radius = 969.0000
External = 0.0053
Long Chord = 6.4013
Mid. Ord. = 0.0053
P.C. Station 10+92.12 N 10,165,659.9014 E 3,119,226.5571
P.T. Station 10+98.52 N 10,165,665.5780 E 3,119,223.5986
C.C. N 10,166,110.5913 E 3,120,084.3681
Back = N 27° 43' 02.01" W
Ahead = N 27° 20' 19.40" W
Chord Bear = N 27° 31' 40.70" W

Curve Data

Curve SDWK-EDGE-214
P.I. Station 11+04.81 N 10,165,671.1639 E 3,119,220.7107
Delta = 17° 52' 05.46" (LT)
Degree = 143° 14' 22.06"
Tangent = 6.2882
Length = 12.4743
Radius = 40.0000
External = 0.4913
Long Chord = 12.4239
Mid. Ord. = 0.4853
P.C. Station 10+98.52 N 10,165,665.5780 E 3,119,223.5986
P.T. Station 11+10.99 N 10,165,675.5942 E 3,119,216.2482
C.C. N 10,165,647.2080 E 3,119,188.0663
Back = N 27° 20' 19.40" W
Ahead = N 45° 12' 24.86" W
Chord Bear = N 36° 16' 22.13" W

Course from PT SDWK-EDGE-214 to PC SDWK-EDGE-215 N 45° 12' 24.87" W Dist 2.4579

Curve Data

Curve SDWK-EDGE-215
P.I. Station 11+20.33 N 10,165,682.1730 E 3,119,209.6218
Delta = 19° 31' 03.71" (RT)
Degree = 143° 14' 22.02"
Tangent = 6.8796
Length = 13.6259
Radius = 40.0000
External = 0.5873
Long Chord = 13.5601
Mid. Ord. = 0.5786
P.C. Station 11+13.45 N 10,165,677.3260 E 3,119,214.5039
P.T. Station 11+27.08 N 10,165,688.3726 E 3,119,206.6395
C.C. N 10,165,705.7122 E 3,119,242.6859
Back = N 45° 12' 24.86" W
Ahead = N 25° 41' 21.16" W
Chord Bear = N 35° 26' 53.01" W

Curve Data

Curve SDWK-EDGE-216
P.I. Station 11+36.60 N 10,165,696.9555 E 3,119,202.5109
Delta = 1° 07' 13.82" (RT)
Degree = 5° 52' 57.08"
Tangent = 9.5243
Length = 19.0480
Radius = 974.0000
External = 0.0466
Long Chord = 19.0477
Mid. Ord. = 0.0466
P.C. Station 11+27.08 N 10,165,688.3726 E 3,119,206.6395
P.T. Station 11+46.12 N 10,165,705.6175 E 3,119,198.5508
C.C. N 10,166,110.5913 E 3,120,084.3681
Back = N 25° 41' 21.16" W
Ahead = N 24° 34' 07.34" W
Chord Bear = N 25° 07' 44.25" W

Curve Data

Curve SDWK-EDGE-217
P.I. Station 11+48.37 N 10,165,707.6635 E 3,119,197.6155
Delta = 0° 15' 52.80" (RT)
Degree = 5° 52' 57.08"
Tangent = 2.2496
Length = 4.4992
Radius = 974.0003
External = 0.0026
Long Chord = 4.4992
Mid. Ord. = 0.0026
P.C. Station 11+46.12 N 10,165,705.6175 E 3,119,198.5508
P.T. Station 11+50.62 N 10,165,709.7137 E 3,119,196.6896
C.C. N 10,166,110.5914 E 3,120,084.3684
Back = N 24° 34' 07.34" W
Ahead = N 24° 18' 14.54" W
Chord Bear = N 24° 26' 10.94" W

Course from PT SDWK-EDGE-217 to SW2109 N 24° 18' 14.54" W Dist 475.5094

Point SW2109 N 10,166,143.0808 E 3,119,000.9800 Sta 16+26.13

Course from SW2109 to PC SDWK-EDGE-218 N 24° 18' 14.54" W Dist 11.6208

Curve Data

Curve SDWK-EDGE-218
P.I. Station 16+52.37 N 10,166,166.9922 E 3,118,990.1816
Delta = 0° 33' 50.12" (RT)
Degree = 1° 55' 44.94"
Tangent = 14.6159
Length = 29.2316
Radius = 2,970.0000
External = 0.0360
Long Chord = 29.2315
Mid. Ord. = 0.0360
P.C. Station 16+37.75 N 10,166,153.6717 E 3,118,996.1972
P.T. Station 16+66.98 N 10,166,180.3714 E 3,118,984.2974
C.C. N 10,167,376.0601 E 3,121,702.9787
Back = N 24° 18' 14.54" W
Ahead = N 23° 44' 24.42" W
Chord Bear = N 24° 01' 19.48" W

Curve Data

Curve SDWK-EDGE-219
P.I. Station 16+72.89 N 10,166,185.7728 E 3,118,981.9218
Delta = 32° 52' 34.95" (RT)
Degree = 286° 28' 44.16"
Tangent = 5.9008
Length = 11.4760
Radius = 20.0000
External = 0.8523
Long Chord = 11.3192
Mid. Ord. = 0.8175
P.C. Station 16+66.98 N 10,166,180.3714 E 3,118,984.2974
P.T. Station 16+78.46 N 10,166,191.5988 E 3,118,982.8587
C.C. N 10,166,188.4231 E 3,119,002.6050
Back = N 23° 44' 24.42" W
Ahead = N 9° 08' 10.53" E
Chord Bear = N 7° 18' 06.95" W

Curve Data

Curve SDWK-EDGE-220
P.I. Station 16+95.69 N 10,166,208.6142 E 3,118,985.5952
Delta = 32° 03' 06.40" (LT)
Degree = 95° 29' 34.65"
Tangent = 17.2341
Length = 33.5645
Radius = 60.0000
External = 2.4261
Long Chord = 33.1286
Mid. Ord. = 2.3318
P.C. Station 16+78.46 N 10,166,191.5988 E 3,118,982.8587
P.T. Station 17+12.03 N 10,166,224.4882 E 3,118,978.8847
C.C. N 10,166,201.1258 E 3,118,923.6199
Back = N 9° 08' 10.53" E
Ahead = N 22° 54' 55.87" W
Chord Bear = N 6° 53' 22.67" W

Curve Data

Curve SDWK-EDGE-221
P.I. Station 17+65.30 N 10,166,273.5567 E 3,118,958.1417
Delta = 2° 03' 50.01" (RT)
Degree = 1° 56' 14.30"
Tangent = 53.2728
Length = 106.5341
Radius = 2,957.5000
External = 0.4798
Long Chord = 106.5284
Mid. Ord. = 0.4797
P.C. Station 17+12.03 N 10,166,224.4882 E 3,118,978.8847
P.T. Station 18+18.56 N 10,166,323.3404 E 3,118,939.1793
C.C. N 10,167,376.0601 E 3,121,702.9787
Back = N 22° 54' 55.87" W
Ahead = N 20° 51' 05.86" W
Chord Bear = N 21° 53' 00.87" W

Curve Data

Curve SDWK-EDGE-222
P.I. Station 18+28.06 N 10,166,332.2217 E 3,118,935.7964
Delta = 19° 57' 47.20" (LT)
Degree = 106° 06' 11.84"
Tangent = 9.5037
Length = 18.8148
Radius = 54.0000
External = 0.8299
Long Chord = 18.7198
Mid. Ord. = 0.8174
P.C. Station 18+18.56 N 10,166,323.3404 E 3,118,939.1793
P.T. Station 18+37.37 N 10,166,339.4144 E 3,118,929.5846
C.C. N 10,166,304.1192 E 3,118,888.7160
Back = N 20° 51' 05.86" W
Ahead = N 40° 48' 53.07" W
Chord Bear = N 30° 49' 59.46" W

Curve Data

Curve SDWK-EDGE-223
P.I. Station 18+49.47 N 10,166,348.5698 E 3,118,921.6778
Delta = 20° 46' 22.31" (RT)
Degree = 86° 48' 42.45"
Tangent = 12.0971
Length = 23.9286
Radius = 66.0000
External = 1.0995
Long Chord = 23.7978
Mid. Ord. = 1.0815
P.C. Station 18+37.37 N 10,166,339.4144 E 3,118,929.5846
P.T. Station 18+61.30 N 10,166,359.9344 E 3,118,917.5320
C.C. N 10,166,382.5530 E 3,118,979.5352
Back = N 40° 48' 53.07" W
Ahead = N 20° 02' 30.75" W
Chord Bear = N 30° 25' 41.91" W

Curve Data

Curve SDWK-EDGE-224
P.I. Station 18+74.21 N 10,166,372.0581 E 3,118,913.1093
Delta = 0° 29' 55.53" (RT)
Degree = 1° 55' 56.65"
Tangent = 12.9052
Length = 25.8103
Radius = 2,965.0001
External = 0.0281
Long Chord = 25.8102
Mid. Ord. = 0.0281
P.C. Station 18+61.30 N 10,166,359.9344 E 3,118,917.5320
P.T. Station 18+87.11 N 10,166,384.2198 E 3,118,908.7923
C.C. N 10,167,376.0602 E 3,121,702.9789
Back = N 20° 02' 30.75" W
Ahead = N 19° 32' 35.22" W
Chord Bear = N 19° 47' 32.99" W

Curve Data

Curve SDWK-EDGE-225
P.I. Station 19+07.04 N 10,166,402.9986 E 3,118,902.1265
Delta = 31° 46' 47.61" (RT)
Degree = 81° 51' 04.01"
Tangent = 19.9267
Length = 38.8265
Radius = 70.0000
External = 2.7810
Long Chord = 38.3307
Mid. Ord. = 2.6747
P.C. Station 18+87.11 N 10,166,384.2198 E 3,118,908.7923
P.T. Station 19+25.94 N 10,166,422.4726 E 3,118,906.3500
C.C. N 10,166,407.6360 E 3,118,974.7596
Back = N 19° 32' 35.22" W
Ahead = N 12° 14' 12.39" E
Chord Bear = N 3° 39' 11.42" W

Curve Data

Curve SDWK-EDGE-226
P.I. Station 19+81.23 N 10,166,476.5037 E 3,118,918.0683
Delta = 57° 52' 26.47" (LT)
Degree = 57° 17' 44.81"
Tangent = 55.2873
Length = 101.0092
Radius = 100.0000
External = 14.2658
Long Chord = 96.7696
Mid. Ord. = 12.4848
P.C. Station 19+25.94 N 10,166,422.4726 E 3,118,906.3500
P.T. Station 20+26.95 N 10,166,515.1605 E 3,118,878.5419
C.C. N 10,166,443.6678 E 3,118,808.6220
Back = N 12° 14' 12.39" E
Ahead = N 45° 38' 14.08" W
Chord Bear = N 16° 42' 00.85" W

WYOMING SPRINGS
SEGMENT 1
ROUND ROCK, TX

ROUND ROCK
TEXAS

halff
13620 BRANTWICK DR
BLDG C, STE 100
AUSTIN, TX 78729
(512) 777-4800
TBPELS FIRM #312

Revision No.	Date	Description

STATE OF TEXAS
JEFFREY L NAGY
133255
LICENSED
PROFESSIONAL ENGINEER
4/17/23

100% SUBMITTAL

Project No.:	36179.002
Issued:	4/17/2023
Drawn By:	SG
Checked By:	JN
Scale:	N.T.S

Sheet Title
HORIZONTAL ALIGNMENT DATA SHEET (6 OF 8)

Sheet Number
82

Plotted By: JNAGY@HALFF.COM
Plotted On: 4/17/2023 1:10:39 PM
File Name: C:\Users\JNAGY\Halff Associates Inc\Wyoming Springs - Segment 1 - Documents\Design\Roadway\Horizontal\Horizontal Alignment Data Sheet.dgn
HALFF
ab3934
1139934-4M
4/17/2023

Curve Data
Curve SDWK-EDGE-227
P.I. Station 20+44.21 N 10,166,527.2295 E 3,118,866.2014
Delta = 29° 18' 46.16" (RT)
Degree = 86° 48' 42.42"
Tangent = 17.2611
Length = 33.7659
Radius = 66.0000
External = 2.2198
Long Chord = 33.3989
Mid. Ord. = 2.1476
P.C. Station 20+26.95 N 10,166,515.1605 E 3,118,878.5419
P.T. Station 20+60.71 N 10,166,543.7947 E 3,118,861.3497
C.C. N 10,166,562.3457 E 3,118,924.6890
Back = N 45° 38' 14.08" W
Ahead = N 16° 19' 27.92" W
Chord Bear = N 30° 58' 51.00" W

Curve Data
Curve SDWK-EDGE-228
P.I. Station 20+72.81 N 10,166,555.4010 E 3,118,857.9505
Delta = 0° 28' 04.91" (RT)
Degree = 1° 56' 06.05"
Tangent = 12.0938
Length = 24.1874
Radius = 2,961.0000
External = 0.0247
Long Chord = 24.1873
Mid. Ord. = 0.0247
P.C. Station 20+60.71 N 10,166,543.7947 E 3,118,861.3497
P.T. Station 20+84.90 N 10,166,567.0346 E 3,118,854.6461
C.C. N 10,167,376.0601 E 3,121,702.9787
Back = N 16° 19' 27.92" W
Ahead = N 15° 51' 23.01" W
Chord Bear = N 16° 05' 25.46" W

Curve Data
Curve SDWK-EDGE-229
P.I. Station 21+24.19 N 10,166,604.8289 E 3,118,843.9112
Delta = 4° 20' 52.38" (LT)
Degree = 5° 32' 08.97"
Tangent = 39.2893
Length = 78.5409
Radius = 1,035.0000
External = 0.7455
Long Chord = 78.5220
Mid. Ord. = 0.7449
P.C. Station 20+84.90 N 10,166,567.0346 E 3,118,854.6461
P.T. Station 21+63.44 N 10,166,641.7006 E 3,118,830.3420
C.C. N 10,166,284.2445 E 3,117,859.0284
Back = N 15° 51' 23.01" W
Ahead = N 20° 12' 15.40" W
Chord Bear = N 18° 01' 49.20" W

Course from PT SDWK-EDGE-229 to PC SDWK-EDGE-230 N 20° 12' 15.40" W Dist 416.6613

Curve Data
Curve SDWK-EDGE-230
P.I. Station 26+13.02 N 10,167,063.6174 E 3,118,675.0710
Delta = 9° 33' 07.69" (LT)
Degree = 14° 32' 31.47"
Tangent = 32.9194
Length = 65.6862
Radius = 394.0000
External = 1.3728
Long Chord = 65.6101
Mid. Ord. = 1.3681
P.C. Station 25+80.10 N 10,167,032.7236 E 3,118,686.4404
P.T. Station 26+45.79 N 10,167,092.1961 E 3,118,658.7327
C.C. N 10,166,896.6485 E 3,118,316.6843
Back = N 20° 12' 15.40" W
Ahead = N 29° 45' 23.08" W
Chord Bear = N 24° 58' 49.24" W

Curve Data
Curve SDWK-EDGE-231
P.I. Station 26+49.42 N 10,167,095.3437 E 3,118,656.9332
Delta = 11° 49' 42.81" (LT)
Degree = 163° 42' 07.95"
Tangent = 3.6257
Length = 7.2257
Radius = 35.0000
External = 0.1873
Long Chord = 7.2128
Mid. Ord. = 0.1863
P.C. Station 26+45.79 N 10,167,092.1961 E 3,118,658.7327
P.T. Station 26+53.02 N 10,167,098.0557 E 3,118,654.5267
C.C. N 10,167,074.8251 E 3,118,628.3477
Back = N 29° 45' 23.08" W
Ahead = N 41° 35' 05.89" W
Chord Bear = N 35° 40' 14.48" W

Curve Data
Curve SDWK-EDGE-232
P.I. Station 26+57.02 N 10,167,101.0543 E 3,118,651.8659
Delta = 22° 40' 09.02" (RT)
Degree = 286° 28' 44.19"
Tangent = 4.0090
Length = 7.9130
Radius = 20.0000
External = 0.3978
Long Chord = 7.8615
Mid. Ord. = 0.3901
P.C. Station 26+53.02 N 10,167,098.0557 E 3,118,654.5267
P.T. Station 26+60.93 N 10,167,104.8467 E 3,118,650.5663
C.C. N 10,167,111.3303 E 3,118,669.4862
Back = N 41° 35' 05.89" W
Ahead = N 18° 54' 56.67" W
Chord Bear = N 30° 15' 01.38" W

Curve Data
Curve SDWK-EDGE-233
P.I. Station 27+79.96 N 10,167,217.4456 E 3,118,611.9804
Delta = 14° 09' 27.13" (RT)
Degree = 5° 58' 39.54"
Tangent = 119.0268
Length = 236.8411
Radius = 958.5000
External = 7.3621
Long Chord = 236.2391
Mid. Ord. = 7.3060
P.C. Station 26+60.93 N 10,167,104.8467 E 3,118,650.5663
P.T. Station 28+97.77 N 10,167,336.0622 E 3,118,602.1069
C.C. N 10,167,415.5716 E 3,119,557.3034
Back = N 18° 54' 56.87" W
Ahead = N 4° 45' 29.74" W
Chord Bear = N 11° 50' 13.30" W

Curve Data
Curve SDWK-EDGE-234
P.I. Station 29+31.44 N 10,167,369.6184 E 3,118,599.3137
Delta = 4° 01' 26.31" (RT)
Degree = 5° 58' 39.54"
Tangent = 33.6723
Length = 67.3170
Radius = 958.5000
External = 0.5913
Long Chord = 67.3032
Mid. Ord. = 0.5909
P.C. Station 29+97.77 N 10,167,336.0622 E 3,118,602.1069
P.T. Station 29+65.09 N 10,167,403.2880 E 3,118,598.8821
C.C. N 10,167,415.5716 E 3,119,557.3034
Back = N 4° 45' 29.74" W
Ahead = N 0° 44' 03.43" W
Chord Bear = N 2° 44' 46.59" W

Curve Data
Curve SDWK-EDGE-235
P.I. Station 29+93.45 N 10,167,431.6438 E 3,118,598.5187
Delta = 3° 23' 21.49" (RT)
Degree = 5° 58' 39.54"
Tangent = 28.3581
Length = 56.6996
Radius = 958.5000
External = 0.4194
Long Chord = 56.6913
Mid. Ord. = 0.4192
P.C. Station 29+65.09 N 10,167,403.2880 E 3,118,598.8821
P.T. Station 30+21.79 N 10,167,459.9714 E 3,118,599.8323
C.C. N 10,167,415.5716 E 3,119,557.3035
Back = N 0° 44' 03.43" W
Ahead = N 2° 39' 18.06" E
Chord Bear = N 0° 57' 37.31" E

Curve Data
Curve SDWK-EDGE-236
P.I. Station 30+26.62 N 10,167,464.8000 E 3,118,600.0563
Delta = 27° 10' 29.08" (RT)
Degree = 286° 28' 44.30"
Tangent = 4.8338
Length = 9.4858
Radius = 20.0000
External = 0.5759
Long Chord = 9.3971
Mid. Ord. = 0.5597
P.C. Station 30+21.79 N 10,167,459.9714 E 3,118,599.8323
P.T. Station 30+31.27 N 10,167,468.9934 E 3,118,602.4607
C.C. N 10,167,459.0449 E 3,118,619.8109
Back = N 2° 39' 18.06" E
Ahead = N 29° 49' 47.14" E
Chord Bear = N 16° 14' 32.60" E

Curve Data
Curve SDWK-EDGE-237
P.I. Station 30+33.64 N 10,167,471.0502 E 3,118,603.6401
Delta = 13° 31' 15.90" (LT)
Degree = 286° 28' 43.50"
Tangent = 2.3709
Length = 4.7198
Radius = 20.0000
External = 0.1400
Long Chord = 4.7088
Mid. Ord. = 0.1391
P.C. Station 30+31.27 N 10,167,468.9934 E 3,118,602.4607
P.T. Station 30+35.99 N 10,167,473.3257 E 3,118,604.3058
C.C. N 10,167,478.9419 E 3,118,585.1106
Back = N 29° 49' 47.14" E
Ahead = N 16° 18' 31.24" E
Chord Bear = N 23° 04' 09.19" E

Course from PT SDWK-EDGE-237 to PC SDWK-EDGE-238 N 16° 18' 31.24" E Dist 32.7873

Curve Data
Curve SDWK-EDGE-238
P.I. Station 30+69.93 N 10,167,505.9000 E 3,118,613.8366
Delta = 4° 33' 09.04" (LT)
Degree = 197° 34' 17.95"
Tangent = 1.1527
Length = 2.3042
Radius = 29.0000
External = 0.0229
Long Chord = 2.3036
Mid. Ord. = 0.0229
P.C. Station 30+68.78 N 10,167,504.7937 E 3,118,613.5129
P.T. Station 30+71.08 N 10,167,507.0286 E 3,118,614.0715
C.C. N 10,167,512.9372 E 3,118,585.6798
Back = N 16° 18' 31.24" E
Ahead = N 11° 45' 22.20" E
Chord Bear = N 14° 01' 56.72" E

Course from PT SDWK-EDGE-238 to PC SDWK-EDGE-239 N 11° 45' 22.20" E Dist 64.5455

Curve Data
Curve SDWK-EDGE-239
P.I. Station 31+60.59 N 10,167,594.6526 E 3,118,632.3071
Delta = 26° 29' 46.01" (RT)
Degree = 54° 03' 09.44"
Tangent = 24.9559
Length = 49.0191
Radius = 106.0000
External = 2.8981
Long Chord = 48.5835
Mid. Ord. = 2.8210
P.C. Station 31+35.63 N 10,167,570.2202 E 3,118,627.2224
P.T. Station 31+84.65 N 10,167,614.2503 E 3,118,647.7579
C.C. N 10,167,548.6230 E 3,118,730.9989
Back = N 11° 45' 22.20" E
Ahead = N 38° 15' 08.21" E
Chord Bear = N 25° 00' 15.20" E

Course from PT SDWK-EDGE-239 to PC SDWK-EDGE-240 N 38° 15' 08.21" E Dist 10.8190

Curve Data
Curve SDWK-EDGE-240
P.I. Station 32+02.67 N 10,167,628.4060 E 3,118,658.9184
Delta = 8° 14' 40.21" (LT)
Degree = 57° 17' 44.81"
Tangent = 7.2071
Length = 14.3894
Radius = 100.0000
External = 0.2594
Long Chord = 14.3770
Mid. Ord. = 0.2587
P.C. Station 31+95.47 N 10,167,622.7463 E 3,118,654.4562
P.T. Station 32+09.86 N 10,167,634.6471 E 3,118,662.5228
C.C. N 10,167,684.6588 E 3,118,575.9270
Back = N 38° 15' 08.21" E
Ahead = N 30° 00' 28.00" E
Chord Bear = N 34° 07' 48.11" E

Course from PT SDWK-EDGE-240 to PC SDWK-EDGE-241 N 30° 00' 28.00" E Dist 27.8603

Curve Data
Curve SDWK-EDGE-241
P.I. Station 32+67.90 N 10,167,684.9110 E 3,118,691.5518
Delta = 92° 17' 31.85" (LT)
Degree = 197° 34' 17.95"
Tangent = 30.1840
Length = 46.7133
Radius = 29.0000
External = 12.8578
Long Chord = 41.8243
Mid. Ord. = 8.9082
P.C. Station 32+37.72 N 10,167,658.7729 E 3,118,676.4562
P.T. Station 32+84.43 N 10,167,698.9491 E 3,118,664.8308
C.C. N 10,167,673.2763 E 3,118,651.3434
Back = N 30° 00' 28.00" E
Ahead = N 62° 17' 03.85" W
Chord Bear = N 16° 08' 17.92" W

Course from PT SDWK-EDGE-241 to SW2110 N 62° 17' 03.68" W Dist 0.3174

Point SW2110 N 10,167,699.0967 E 3,118,664.5499 Sta 32+84.75

Course from SW2110 to SW2111 N 71° 32' 34.36" W Dist 4.3935

Point SW2111 N 10,167,700.4877 E 3,118,660.3823 Sta 32+89.14

Course from SW2111 to SW2112 S 63° 27' 25.65" W Dist 4.7573

Point SW2112 N 10,167,698.3618 E 3,118,656.1265 Sta 32+93.90

Course from SW2112 to SW2113 S 18° 27' 25.65" W Dist 2.1583

Point SW2113 N 10,167,696.3145 E 3,118,655.4432 Sta 32+96.06

Course from SW2113 to SW2114 S 18° 33' 25.22" W Dist 5.0001

Point SW2114 N 10,167,691.5744 E 3,118,653.8519 Sta 33+01.06

Course from SW2114 to SW2115 N 71° 32' 34.35" W Dist 13.8772

Point SW2115 N 10,167,695.9678 E 3,118,640.6885 Sta 33+14.93

==========
Ending chain SDWK-EDGE-2 description

WYOMING SPRINGS DITCH HORIZONTAL ALIGNMENT DATA

Beginning chain BCRT_DITCH description
==========

Curve Data
Curve BCRT_DITCH1
P.I. Station 1+26.21 N 10,165,466.1944 E 3,119,192.5399
Delta = 33° 57' 49.2392" (LT)
Degree = 66° 44' 49.8488"
Tangent = 26.2142
Length = 50.8841
Radius = 85.8400
External = 3.9135
Long Chord = 50.1423
Mid. Ord. = 3.7428
P.C. Station 1+00.00 N 10,165,442.2290 E 3,119,181.9171
P.T. Station 1+50.88 N 10,165,492.0057 E 3,119,187.9617
C.C. N 10,165,477.0139 E 3,119,103.4409
Back = N 23° 54' 19.8424" E
Ahead = N 10° 03' 29.3968" W
Chord Bear = N 6° 55' 25.2228" E

Course from PT BCRT_DITCH1 to BCRTDITCH02 N 26° 18' 31.2298" W Dist 13.6876

Point BCRTDITCH02 N 10,165,504.2755 E 3,119,181.8952 Sta 1+64.57

Course from BCRTDITCH02 to BCRTDITCH03 N 24° 12' 12.8672" W Dist 16.5893

Point BCRTDITCH03 N 10,165,519.4065 E 3,119,175.0939 Sta 1+81.16

Course from BCRTDITCH03 to PC BCRT_DITCH2 N 13° 11' 30.3442" W Dist 10.7433

Curve Data
Curve BCRT_DITCH2
P.I. Station 1+96.98 N 10,165,534.8380 E 3,119,171.6112
Delta = 12° 19' 54.3937" (LT)
Degree = 121° 54' 21.2699"
Tangent = 5.0775
Length = 10.1158
Radius = 47.0000
External = 0.2735
Long Chord = 10.0963
Mid. Ord. = 0.2719
P.C. Station 1+91.90 N 10,165,529.8663 E 3,119,172.6422
P.T. Station 2+02.02 N 10,165,539.4749 E 3,119,169.5421
C.C. N 10,165,520.3227 E 3,119,126.6214
Back = N 11° 42' 56.5846" W
Ahead = N 24° 02' 50.9784" W
Chord Bear = N 17° 52' 53.7815" W

Course from PT BCRT_DITCH2 to PC BCRT_DITCH3 N 24° 02' 50.9783" W Dist 142.7291

Curve Data
Curve BCRT_DITCH3
P.I. Station 3+68.72 N 10,165,691.3262 E 3,119,100.8044
Delta = 53° 47' 30.9344" (LT)
Degree = 121° 14' 53.2028"
Tangent = 23.9696
Length = 44.3652
Radius = 47.2550
External = 5.7316
Long Chord = 42.7537
Mid. Ord. = 5.1116
P.C. Station 3+44.75 N 10,165,669.8162 E 3,119,111.3809
P.T. Station 3+89.11 N 10,165,695.4986 E 3,119,077.2007
C.C. N 10,165,648.9651 E 3,119,068.9750
Back = N 26° 11' 00.6294" W
Ahead = N 79° 58' 31.5638" W
Chord Bear = N 53° 04' 46.0966" W

Course from PT BCRT_DITCH3 to BCRTDITCH04 N 77° 23' 01.6334" W Dist 26.6923

Point BCRTDITCH04 N 10,165,701.3287 E 3,119,051.1529 Sta 4+15.81

==========
Ending chain BCRT_DITCH description

Chain OSD1_DITCH contains:
OSD101 CUR OSD1_DITCH1 CUR OSD1_DITCH2 CUR OSD1_DITCH3 CUR OSD1_DITCH4

Beginning chain OSD1_DITCH description
==========

Point OSD101 N 10,166,735.8163 E 3,118,626.6962 Sta 1+00.00

Course from OSD101 to PC OSD1_DITCH1 N 9° 52' 02.2041" W Dist 62.5215

Curve Data
Curve OSD1_DITCH1
P.I. Station 1+65.75 N 10,166,800.5962 E 3,118,615.4284
Delta = 6° 09' 53.7144" (LT)
Degree = 95° 29' 34.6771"
Tangent = 3.2311
Length = 6.4559
Radius = 60.0000
External = 0.0869
Long Chord = 6.4528
Mid. Ord. = 0.0868
P.C. Station 1+62.52 N 10,166,797.4129 E 3,118,615.9821
P.T. Station 1+68.98 N 10,166,803.7015 E 3,118,614.5361
C.C. N 10,166,787.1309 E 3,118,556.8697
Back = N 9° 52' 02.2037" W
Ahead = N 16° 01' 55.9181" W
Chord Bear = N 12° 56' 59.0609" W

Course from PT OSD1_DITCH1 to PC OSD1_DITCH2 N 16° 01' 55.9180" W Dist 87.4615

Curve Data
Curve OSD1_DITCH2
P.I. Station 2+63.21 N 10,166,894.2807 E 3,118,588.5676
Delta = 25° 25' 18.8490" (LT)
Degree = 190° 59' 09.3542"
Tangent = 6.7668
Length = 13.3109
Radius = 30.0000
External = 0.7537
Long Chord = 13.2020
Mid. Ord. = 0.7352
P.C. Station 2+56.44 N 10,166,887.7614 E 3,118,590.3811
P.T. Station 2+69.75 N 10,166,899.3902 E 3,118,584.1311
C.C. N 10,166,879.7214 E 3,118,561.4786
Back = N 15° 32' 42.9669" W
Ahead = N 40° 58' 01.8159" W
Chord Bear = N 28° 15' 22.3914" W

Course from PT OSD1_DITCH2 to PC OSD1_DITCH3 N 40° 58' 01.8138" W Dist 20.4583

Curve Data
Curve OSD1_DITCH3
P.I. Station 2+95.39 N 10,166,918.7532 E 3,118,567.3186
Delta = 19° 36' 43.5595" (RT)
Degree = 190° 59' 09.3542"
Tangent = 5.1852
Length = 10.2689
Radius = 30.0000
External = 0.4448
Long Chord = 10.2188
Mid. Ord. = 0.4383
P.C. Station 2+90.21 N 10,166,914.8380 E 3,118,570.7181
P.T. Station 3+00.48 N 10,166,923.5824 E 3,118,565.4304
C.C. N 10,166,934.5068 E 3,118,593.3707
Back = N 40° 58' 01.8159" W
Ahead = N 21° 21' 18.2564" W
Chord Bear = N 31° 09' 40.0361" W

Course from PT OSD1_DITCH3 to PC OSD1_DITCH4 N 21° 21' 18.2559" W Dist 68.0402

Curve Data
Curve OSD1_DITCH4
P.I. Station 5+93.24 N 10,167,199.8503 E 3,118,468.7187
Delta = 24° 09' 38.4553" (RT)
Degree = 5° 27' 24.2673"
Tangent = 224.7237
Length = 442.7676
Radius = 1,050.0000
External = 23.7787
Long Chord = 439.4944
Mid. Ord. = 23.2521
P.C. Station 3+68.52 N 10,166,986.9510 E 3,118,540.6538
P.T. Station 8+11.28 N 10,167,423.5426 E 3,118,490.2241
C.C. N 10,167,323.0608 E 3,119,535.4052
Back = N 18° 40' 09.2892" W
Ahead = N 5° 29' 29.1660" E
Chord Bear = N 6° 35' 20.0616" W

==========
Ending chain OSD1_DITCH description

WYOMING SPRINGS
SEGMENT 1
ROUND ROCK, TX

ROUND ROCK
TEXAS

halff
13620 BRAKWICK DR
BLDG C, STE 100
AUSTIN, TX 78729
(512) 777-4800
TBPELS FIRM #312

Revision No.	Date	Description

F-312 4/5/23
STATE OF TEXAS
JEFFREY L. NAGY
133255
LICENSED
PROFESSIONAL ENGINEER

100% SUBMITTAL

Project No.:	36179.002
Issued:	4/17/2023
Drawn By:	SG
Checked By:	JN
Scale:	N.T.S

Sheet Title
HORIZONTAL ALIGNMENT DATA SHEET
(7 OF 8)

83
Sheet Number

COPYRIGHT 2023 HALFF ASSOCIATES, INC.
I:\Projects\36179.002\Civil\Exhibits\Horizontal Alignment Data Sheet.dgn
$USER
$DGNFILE
$MODEL
$VIEWNAME
$PLOTSCALE
$PLOTDATE

SAM BASS DITCH HORIZONTAL ALIGNMENT DATA

BegInnIng chaIn N_CHANNEL_CL descrIptIon

Point NCL01 N 10,167,980.4623 E 3,117,817.4828 Sta 1+00.00
Course from NCL01 to NCL02 S 80° 55' 06.7967" E Dist 40.1916
Point NCL02 N 10,167,974.1185 E 3,117,857.1706 Sta 1+40.19
Course from NCL02 to NCL03 S 82° 07' 35.4386" E Dist 50.0025
Point NCL03 N 10,167,967.2689 E 3,117,906.7017 Sta 1+90.19
Course from NCL03 to NCL04 S 82° 07' 35.4386" E Dist 50.0025
Point NCL04 N 10,167,960.4192 E 3,117,956.2328 Sta 2+40.20
Course from NCL04 to NCL05 S 82° 15' 32.5777" E Dist 50.0037
Point NCL05 N 10,167,953.6840 E 3,118,005.7808 Sta 2+90.20
Course from NCL05 to NCL06 S 82° 19' 05.0831" E Dist 50.0044
Point NCL06 N 10,167,946.9998 E 3,118,055.3364 Sta 3+40.20
Course from NCL06 to NCL07 S 85° 35' 04.6706" E Dist 50.1237
Point NCL07 N 10,167,943.1409 E 3,118,105.3113 Sta 3+90.33
Course from NCL07 to NCL08 S 86° 42' 51.8802" E Dist 50.2031
Point NCL08 N 10,167,940.2636 E 3,118,155.4319 Sta 4+40.53
Course from NCL08 to NCL09 S 82° 22' 07.4944" E Dist 50.0050
Point NCL09 N 10,167,933.6231 E 3,118,204.9940 Sta 4+90.54
Course from NCL09 to NCL10 S 81° 03' 04.6930" E Dist 50.0020
Point NCL10 N 10,167,925.8453 E 3,118,254.3874 Sta 5+40.54
Course from NCL10 to NCL11 S 84° 08' 36.6325" E Dist 50.0509
Point NCL11 N 10,167,920.7383 E 3,118,304.1770 Sta 5+90.59
Course from NCL11 to NCL12 S 82° 03' 36.7157" E Dist 17.0396
Point NCL12 N 10,167,918.3845 E 3,118,321.0533 Sta 6+07.63
Course from NCL12 to NCL13 S 84° 40' 39.2647" E Dist 35.4297
Point NCL13 N 10,167,915.0981 E 3,118,356.3303 Sta 6+43.06
Course from NCL13 to NCL14 S 78° 13' 55.6370" E Dist 52.4902
Point NCL14 N 10,167,904.3928 E 3,118,407.7173 Sta 6+95.55
Course from NCL14 to NCL15 S 75° 08' 34.2163" E Dist 52.5167
Point NCL15 N 10,167,890.9270 E 3,118,458.4782 Sta 7+48.07
Course from NCL15 to NCL16 S 71° 08' 51.5338" E Dist 52.5214
Point NCL16 N 10,167,873.9557 E 3,118,508.1821 Sta 8+00.59
Course from NCL16 to NCL17 S 70° 42' 40.2807" E Dist 43.7449
Point NCL17 N 10,167,859.5055 E 3,118,549.4713 Sta 8+44.33
Course from NCL17 to NCL18 S 48° 32' 34.6673" E Dist 7.4281
Point NCL18 N 10,167,854.5877 E 3,118,555.0383 Sta 8+51.76
Course from NCL18 to NCL19 S 37° 47' 43.9422" E Dist 16.7765
Point NCL19 N 10,167,841.3308 E 3,118,565.3198 Sta 8+68.54
Course from NCL19 to NCL20 S 70° 33' 16.9408" E Dist 42.8609
Point NCL20 N 10,167,827.0621 E 3,118,605.7359 Sta 9+11.40
Course from NCL20 to NCL21 S 70° 33' 16.9363" E Dist 42.8609
Point NCL21 N 10,167,812.7934 E 3,118,646.1520 Sta 9+54.26
Course from NCL21 to NCL22 S 72° 21' 15.1304" E Dist 46.1720
Point NCL22 N 10,167,798.7972 E 3,118,690.1515 Sta 10+00.43
Course from NCL22 to NCL23 S 69° 57' 47.3044" E Dist 53.8950
Point NCL23 N 10,167,780.3315 E 3,118,740.7844 Sta 10+54.33
Course from NCL23 to NCL24 S 67° 55' 46.7078" E Dist 50.0152
Point NCL24 N 10,167,761.5385 E 3,118,787.1347 Sta 11+04.34
Course from NCL24 to NCL25 S 69° 08' 25.5496" E Dist 50.0003
Point NCL25 N 10,167,743.7345 E 3,118,833.8577 Sta 11+54.34
Course from NCL25 to NCL26 S 69° 08' 25.5496" E Dist 50.0003
Point NCL26 N 10,167,725.9304 E 3,118,880.5808 Sta 12+04.34
Course from NCL26 to NCL27 S 69° 18' 02.8303" E Dist 44.4016
Point NCL27 N 10,167,710.2362 E 3,118,922.1163 Sta 12+48.74
Course from NCL27 to NCL28 S 69° 18' 02.8234" E Dist 5.5984
Point NCL28 N 10,167,708.2573 E 3,118,927.3533 Sta 12+54.34
Course from NCL28 to NCL29 S 69° 18' 02.8295" E Dist 50.0000
Point NCL29 N 10,167,690.5842 E 3,118,974.1257 Sta 13+04.34
Course from NCL29 to NCL30 S 69° 07' 36.9976" E Dist 49.6784
Point NCL30 N 10,167,672.8839 E 3,119,020.5439 Sta 13+54.02
Course from NCL30 to NCL31 S 70° 15' 59.2767" E Dist 49.3310
Point NCL31 N 10,167,656.2274 E 3,119,066.9778 Sta 14+03.35
Course from NCL31 to NCL32 S 70° 38' 47.2756" E Dist 49.4435
Point NCL32 N 10,167,639.8420 E 3,119,113.6274 Sta 14+52.79
Course from NCL32 to NCL33 S 73° 55' 47.2017" E Dist 51.9647
Point NCL33 N 10,167,625.4574 E 3,119,163.5615 Sta 15+04.76
Course from NCL33 to NCL34 S 72° 39' 16.3438" E Dist 3.3335
Point NCL34 N 10,167,624.4636 E 3,119,166.7434 Sta 15+08.09
Course from NCL34 to NCL35 S 57° 48' 53.3851" E Dist 7.8928
Point NCL35 N 10,167,620.2595 E 3,119,173.4233 Sta 15+15.98

Ending chain N_CHANNEL_CL description

BegInnIng chaIn SE_CHANNEL_CL descrIptIon

Point SE01 N 10,167,698.3102 E 3,118,681.9205 Sta 1+00.00
Course from SE01 to SE02 S 67° 08' 55.2453" E Dist 28.0000
Point SE02 N 10,167,687.4367 E 3,118,707.7229 Sta 1+28.00
Course from SE02 to SE03 S 69° 20' 28.2452" E Dist 7.0000
Point SE03 N 10,167,684.9670 E 3,118,714.2728 Sta 1+35.00
Course from SE03 to SE04 S 70° 34' 56.8406" E Dist 41.1717
Point SE04 N 10,167,671.2795 E 3,118,753.1027 Sta 1+76.17
Course from SE04 to SE05 S 69° 20' 28.2366" E Dist 250.3841
Point SE05 N 10,167,582.9434 E 3,118,987.3866 Sta 4+26.56

Ending chain SE_CHANNEL_CL description

WYOMING SPRINGS
SEGMENT 1
ROUND ROCK, TX

ROUND ROCK
TEXAS

halff
13620 BRANTWICK DR
BLDG C, STE 100
AUSTIN, TX 78729
(512) 777-4600
TBPELS FIRM #312

Revision No.	Date	Description

STATE OF TEXAS
JEFFREY L NAGY
133255
LICENSED
PROFESSIONAL ENGINEER
4/5/23

100% SUBMITTAL

Project No.:	36179.002
Issued:	4/17/2023
Drawn By:	SG
Checked By:	JN
Scale:	N.T.S

Sheet Title
HORIZONTAL ALIGNMENT DATA SHEET (8 OF 8)

84
Sheet Number

USR
0x0=2x2=2x2=2
HALFF
alk3914
1:\36\36179.002 SAM BASS DITCH\CIVIL\SHEETS\SAM BASS DITCH HORIZONTAL ALIGNMENT DATA.dwg
Plotted: 17 Apr 2023 - 11:39:48 AM
41772023

SHARED USE PATH & SIDEWALK POINT DATA				
POINT	STATION (CL WYM)	OFFSET (FT.)	LT/RT	DESCRIPTION
1	111+68.02	84.05	LT	BEGIN SUP
2	111+66.48	69.31	LT	PT
3	111+68.79	64.28	LT	PC
4	111+78.57	53.04	LT	PC
5	111+86.97	48.24	LT	PT
6	111+89.26	49.52	LT	PC
7	111+96.87	50.85	LT	PT
8	111+73.24	83.21	LT	BEGIN SUP
9	111+74.40	72.96	LT	PT
10	111+80.52	65.55	LT	PC
11	112+02.39	58.50	LT	PT
12	111+80.15	57.72	RT	BEGIN SIDEWALK
13	111+78.04	67.91	RT	BEGIN SIDEWALK
14	112+72.99	50.38	LT	PC
15	112+64.58	48.94	LT	PCC
16	112+72.99	47.74	LT	PI

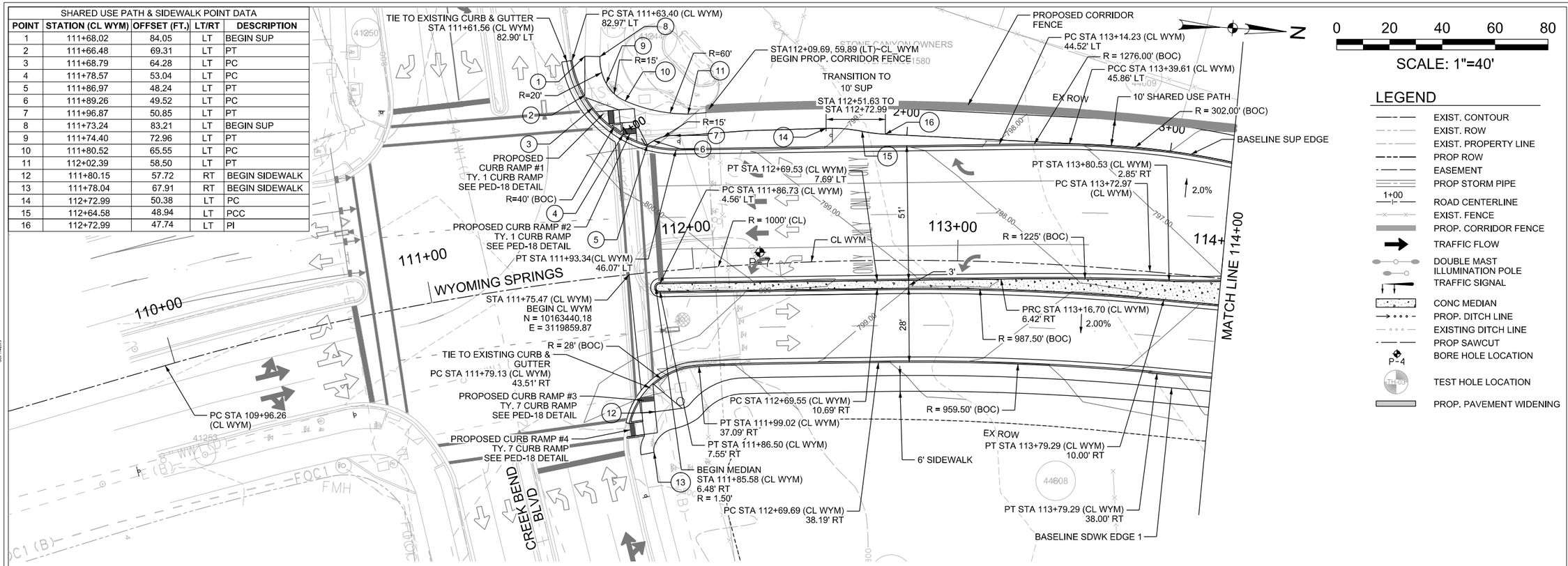

LEGEND

- EXIST. CONTOUR
- EXIST. ROW
- EXIST. PROPERTY LINE
- PROP ROW
- EASEMENT
- PROP STORM PIPE
- 1+00 ROAD CENTERLINE
- EXIST. FENCE
- PROP. CORRIDOR FENCE
- TRAFFIC FLOW
- DOUBLE MAST ILLUMINATION POLE
- TRAFFIC SIGNAL
- CONC MEDIAN
- PROP. DITCH LINE
- EXISTING DITCH LINE
- PROP SAWCUT
- P-4 BORE HOLE LOCATION
- TH-03 TEST HOLE LOCATION
- PROP. PAVEMENT WIDENING

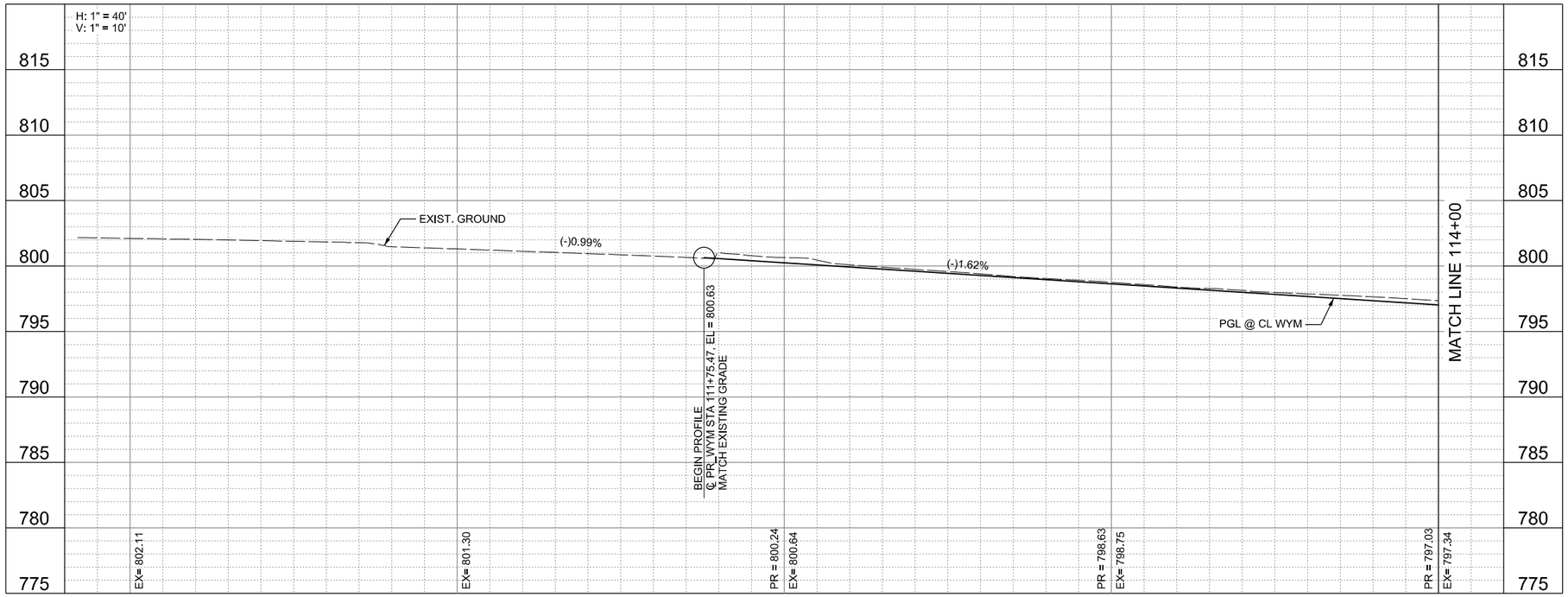

NOTES:

1. CALLOUTS ARE MEASURED TO BACK OF CURB OR EDGE OF PAVEMENT UNLESS OTHERWISE NOTED.
2. ALL STA/OFFSET CALLOUTS ARE FROM WYM/TNR/SBR UNLESS OTHERWISE NOTED.
3. SEE WYOMING SPRINGS DITCH PLAN SHEETS FOR MORE INFORMATION ON DITCHES.
4. ALL EXISTING M/H & WATER VALVES SHALL BE RAISED TO FINAL GRADE PRIOR TO PAVING PER CORR ITEM NO. 506.

WYOMING SPRINGS
SEGMENT 1
ROUND ROCK, TX

ROUND ROCK TEXAS

halff
13620 BRANTWICK DR
BLDG C, STE 100
AUSTIN, TX 78729
(512) 777-4600
TBPELS FIRM #312

Revision		
No.	Date	Description

F-312 4/5/23
STATE OF TEXAS
JEFFREY L. NAGY
133255
LICENSED
PROFESSIONAL ENGINEER
4/5/2023

100% SUBMITTAL

Project No.:	36179.002
Issued:	4/17/2023
Drawn By:	SG
Checked By:	JN
Scale:	1"=40'

Sheet Title
WYOMING SPRINGS DR ROADWAY PLAN & PROFILE (1 OF 12)

85
Sheet Number

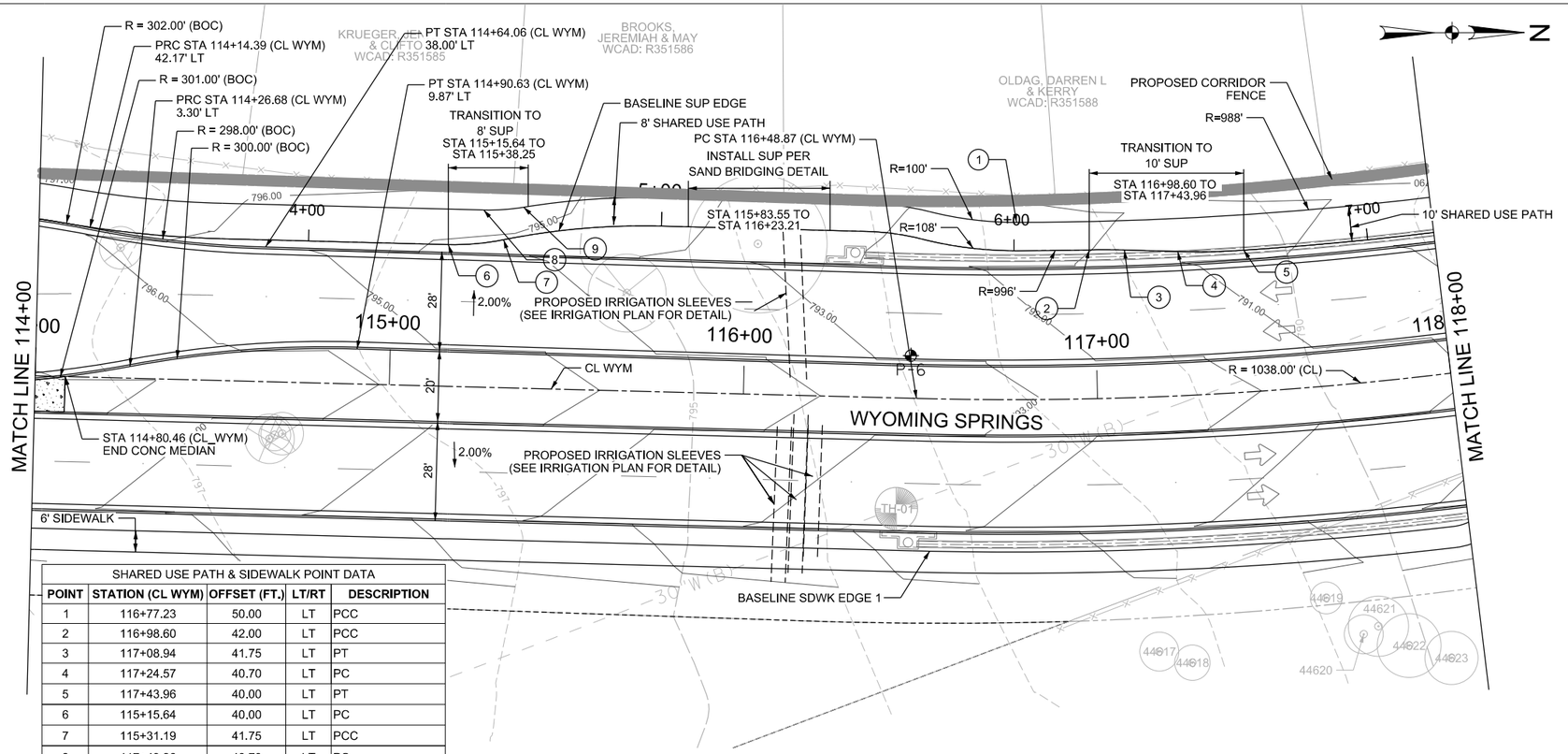

LEGEND

- EXIST. CONTOUR
- EXIST. ROW
- EXIST. PROPERTY LINE
- PROP ROW
- EASEMENT
- PROP STORM PIPE
- 1+00 ROAD CENTERLINE
- EXIST. FENCE
- PROP. CORRIDOR FENCE
- TRAFFIC FLOW
- DOUBLE MAST ILLUMINATION POLE
- TRAFFIC SIGNAL
- CONC MEDIAN
- PROP. DITCH LINE
- EXISTING DITCH LINE
- PROP SAWCUT
- P-4 BORE HOLE LOCATION
- TH-03 TEST HOLE LOCATION
- PROP. PAVEMENT WIDENING

SHARED USE PATH & SIDEWALK POINT DATA				
POINT	STATION (CL WYM)	OFFSET (FT.)	LT/RT	DESCRIPTION
1	116+77.23	50.00	LT	PCC
2	116+98.60	42.00	LT	PCC
3	117+08.94	41.75	LT	PT
4	117+24.57	40.70	LT	PC
5	117+43.96	40.00	LT	PT
6	115+15.64	40.00	LT	PC
7	115+31.19	41.75	LT	PCC
8	117+43.96	40.70	LT	PC
9	117+43.96	40.70	LT	PCC

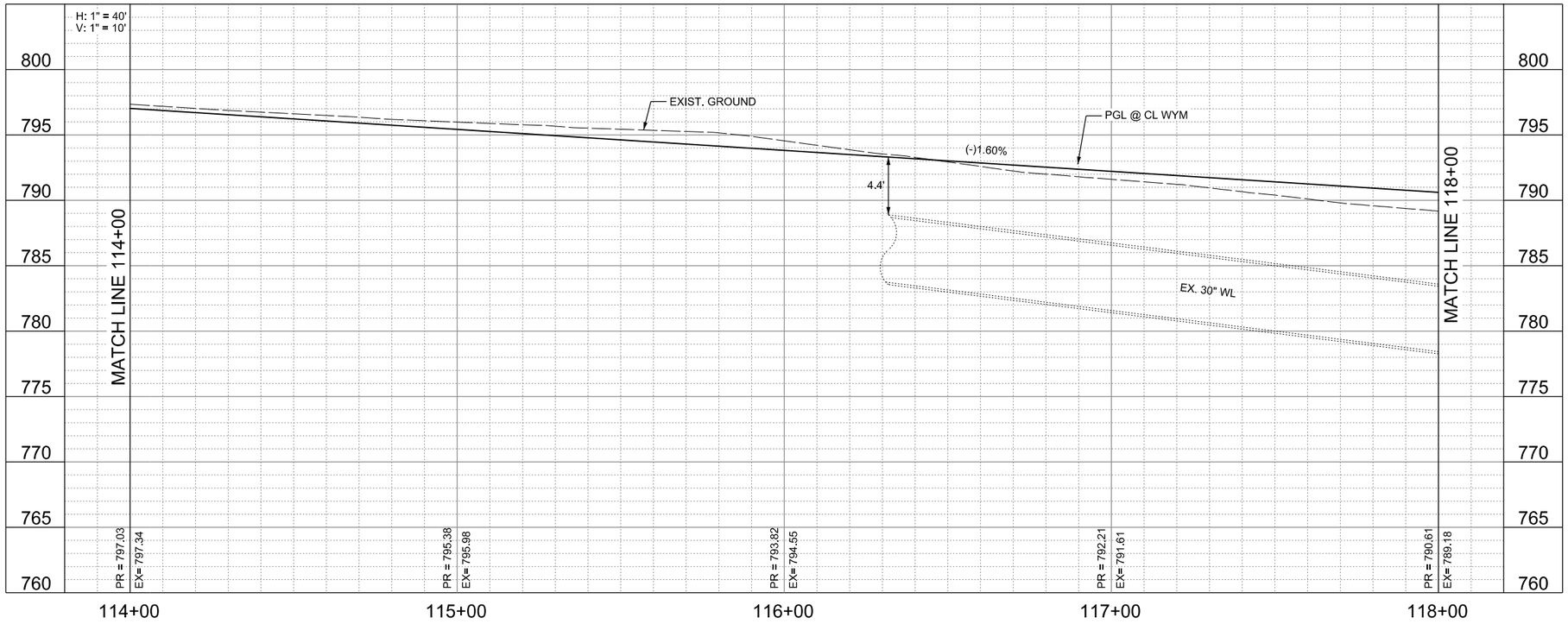

NOTES:

1. CALLOUTS ARE MEASURED TO BACK OF CURB OR EDGE OF PAVEMENT UNLESS OTHERWISE NOTED.
2. ALL STA/OFFSET CALLOUTS ARE FROM WYM/TNR/SBR UNLESS OTHERWISE NOTED.
3. SEE WYOMING SPRINGS DITCH PLAN SHEETS FOR MORE INFORMATION ON DITCHES.
4. ALL EXISTING M/H & WATER VALVES SHALL BE RAISED TO FINAL GRADE PRIOR TO PAVING PER CORR ITEM NO. 506.

WYOMING SPRINGS
SEGMENT 1
ROUND ROCK, TX

ROUND ROCK TEXAS

halff
13620 BRANTWICK DR
BLDG C, STE 100
AUSTIN, TX 78729
(512) 777-4600
TBPELS FIRM #312

Revision		
No.	Date	Description

F-312 4/17/23
STATE OF TEXAS
JEFFREY L NAGY
133255
LICENSED
PROFESSIONAL ENGINEER

100% SUBMITTAL

Project No.:	36179.002
Issued:	4/17/2023
Drawn By:	SG
Checked By:	JN
Scale:	1"=40'

Sheet Title
WYOMING SPRINGS DR ROADWAY PLAN & PROFILE (2 OF 12)

86
Sheet Number

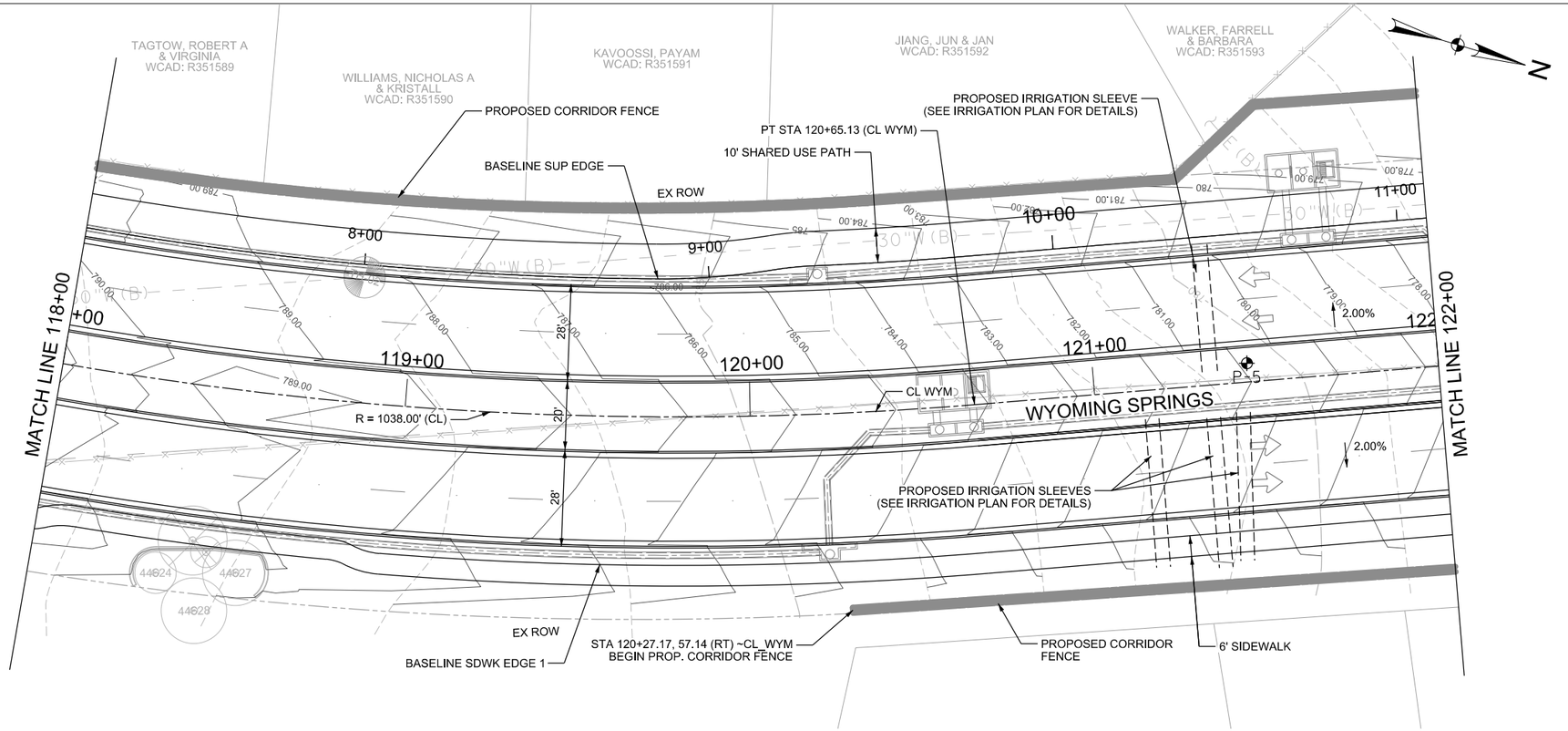

LEGEND

- EXIST. CONTOUR
- EXIST. ROW
- EXIST. PROPERTY LINE
- PROP ROW
- EASEMENT
- PROP STORM PIPE
- 1+00 ROAD CENTERLINE
- EXIST. FENCE
- PROP. CORRIDOR FENCE
- TRAFFIC FLOW
- DOUBLE MAST ILLUMINATION POLE
- TRAFFIC SIGNAL
- CONC MEDIAN
- PROP. DITCH LINE
- EXISTING DITCH LINE
- PROP SAWCUT
- P-4 BORE HOLE LOCATION
- TH-03 TEST HOLE LOCATION
- PROP. PAVEMENT WIDENING

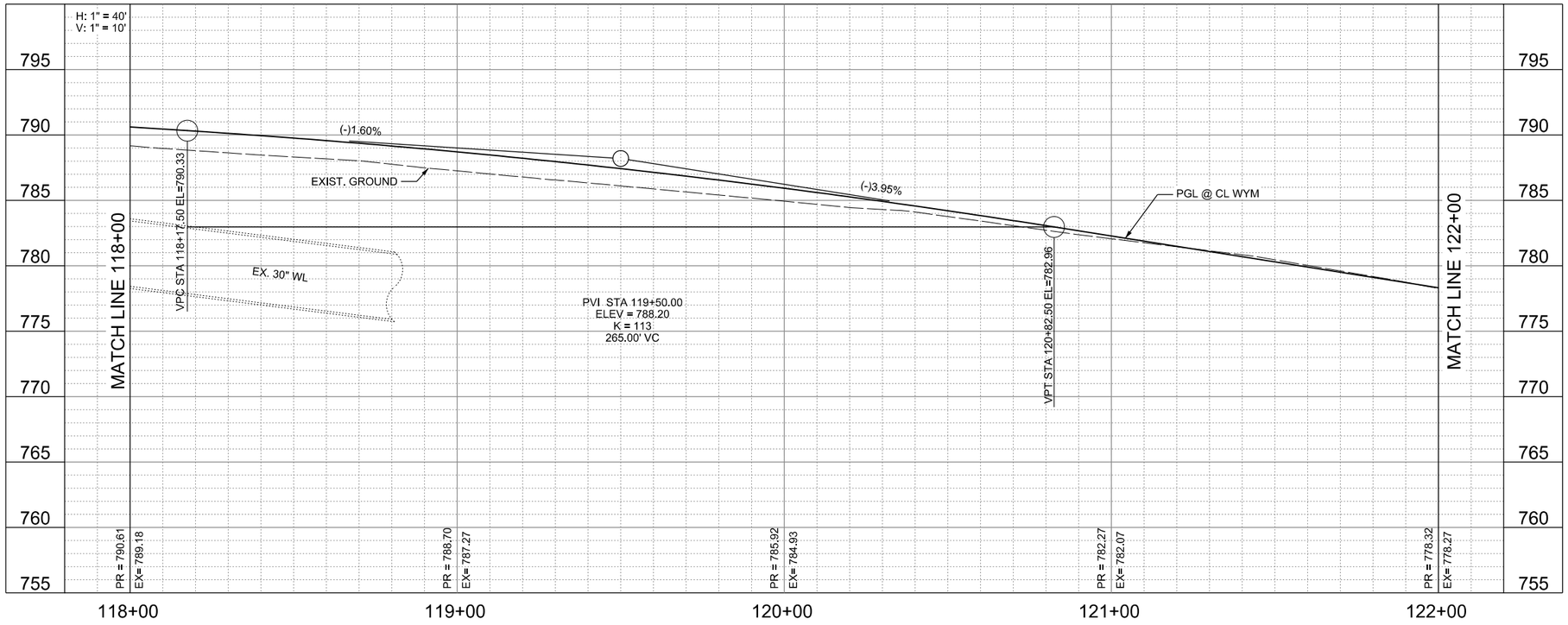

NOTES:

1. CALLOUTS ARE MEASURED TO BACK OF CURB OR EDGE OF PAVEMENT UNLESS OTHERWISE NOTED.
2. ALL STA/OFFSET CALLOUTS ARE FROM WYM/TNR/SBR UNLESS OTHERWISE NOTED.
3. SEE WYOMING SPRINGS DITCH PLAN SHEETS FOR MORE INFORMATION ON DITCHES.
4. ALL EXISTING M/H & WATER VALVES SHALL BE RAISED TO FINAL GRADE PRIOR TO PAVING PER CORR ITEM NO. 506.

WYOMING SPRINGS
SEGMENT 1
ROUND ROCK, TX

ROUND ROCK TEXAS

halff
13620 BRANTWICK DR
BLDG C, STE 100
AUSTIN, TX 78729
(512) 777-4600
TBPELS FIRM #312

Revision No.	Date	Description

STATE OF TEXAS
JEFFREY L NAGY
133255
LICENSED PROFESSIONAL ENGINEER
4/5/23

100% SUBMITTAL

Project No.:	36179.002
Issued:	4/17/2023
Drawn By:	SG
Checked By:	JN
Scale:	1"=40'

Sheet Title
WYOMING SPRINGS DR ROADWAY PLAN & PROFILE (3 OF 12)

87
Sheet Number

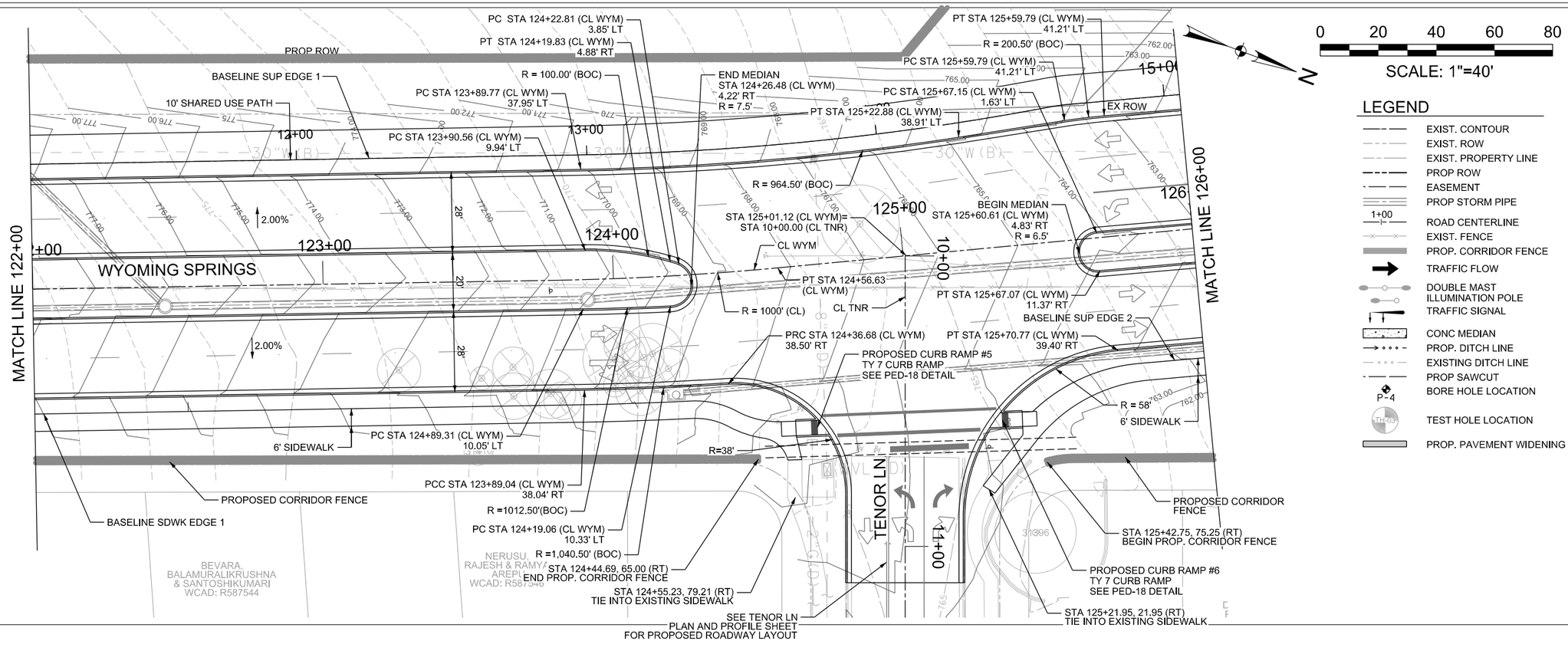

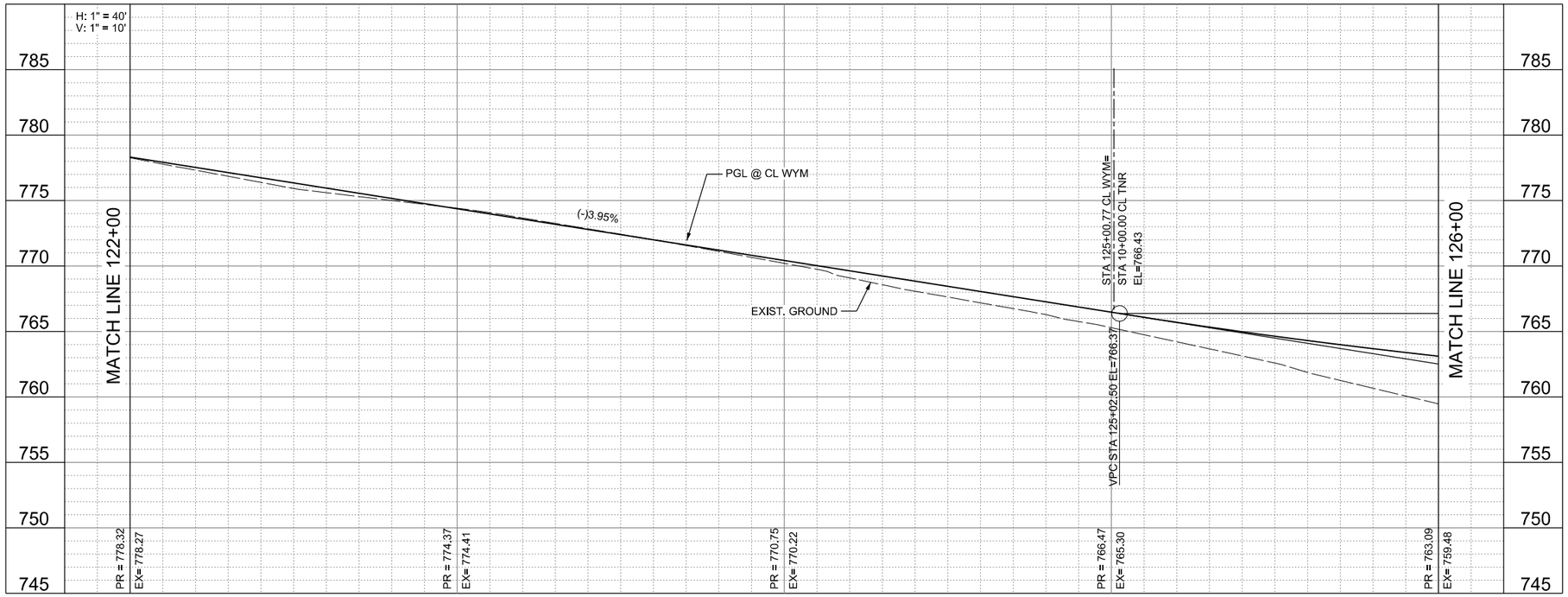

NOTES:

1. CALLOUTS ARE MEASURED TO BACK OF CURB OR EDGE OF PAVEMENT UNLESS OTHERWISE NOTED.
2. ALL STA/OFFSET CALLOUTS ARE FROM WYM/TNR/SBR UNLESS OTHERWISE NOTED.
3. SEE WYOMING SPRINGS DITCH PLAN SHEETS FOR MORE INFORMATION ON DITCHES.
4. ALL EXISTING M/H & WATER VALVES SHALL BE RAISED TO FINAL GRADE PRIOR TO PAVING PER CORR ITEM NO. 506.

WYOMING SPRINGS
SEGMENT 1
ROUND ROCK, TX

ROUND ROCK TEXAS

halff
13620 BRANTWICK DR
BLDG C, STE 100
AUSTIN, TX 78729
(512) 777-4800
TBPELS FIRM #312

Revision No.	Date	Description

F-312 4/5/23
STATE OF TEXAS
JEFFREY L. NAGY
133255
LICENSED
PROFESSIONAL ENGINEER

100% SUBMITTAL

Project No.:	36179.002
Issued:	4/17/2023
Drawn By:	SG
Checked By:	JN
Scale:	1"=40'

Sheet Title
WYOMING SPRINGS DR ROADWAY PLAN & PROFILE (4 OF 12)

88
Sheet Number

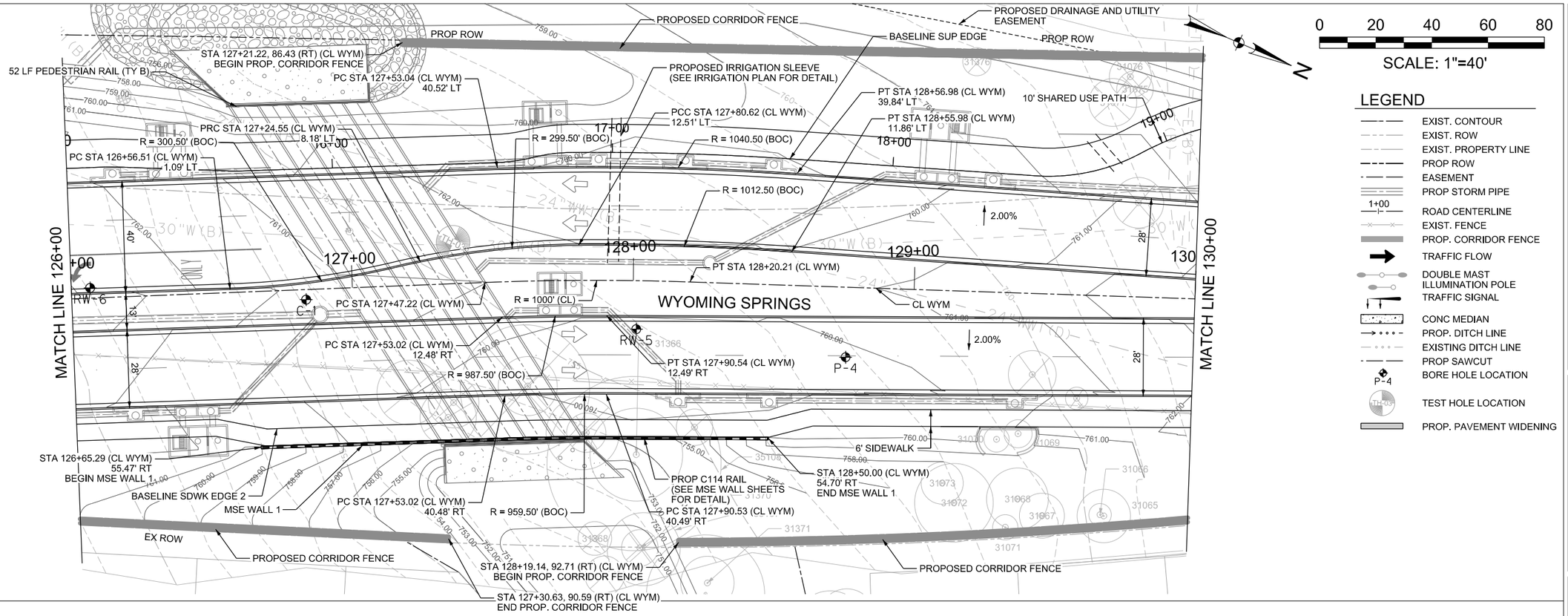

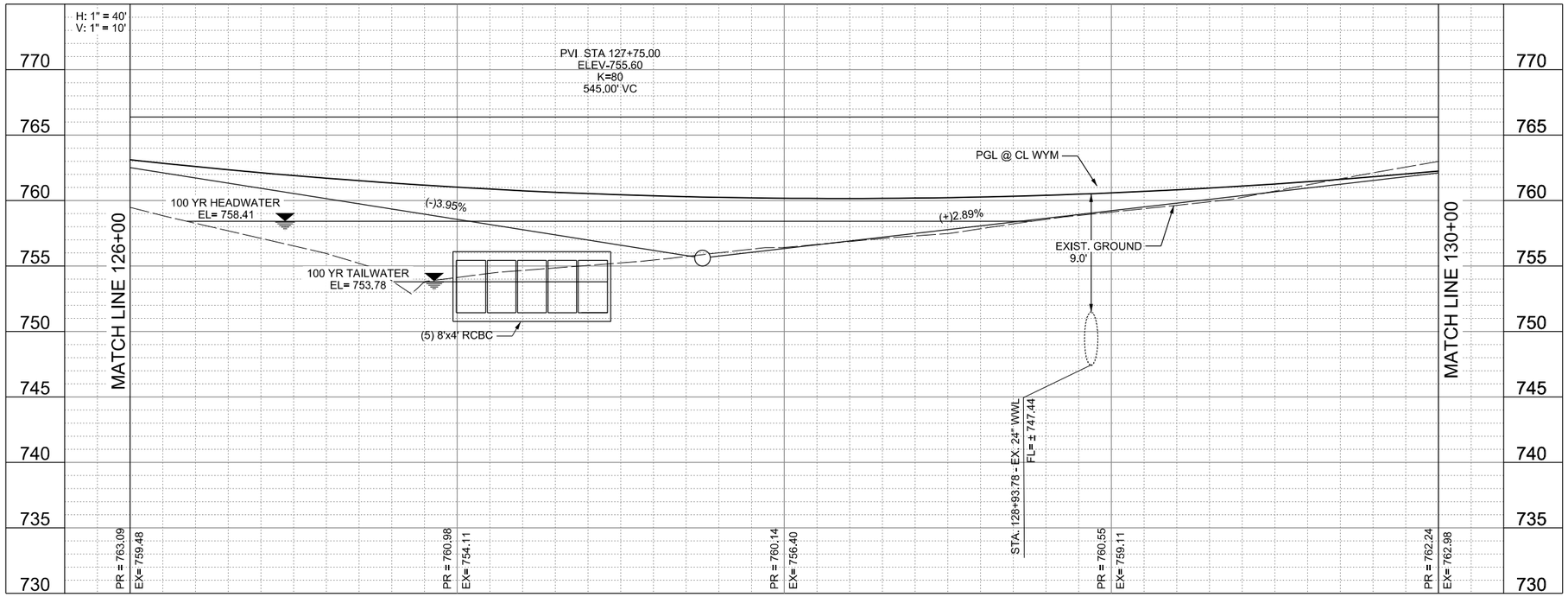

NOTES:

1. CALLOUTS ARE MEASURED TO BACK OF CURB OR EDGE OF PAVEMENT UNLESS OTHERWISE NOTED.
2. ALL STA/OFFSET CALLOUTS ARE FROM WYM/TNR/SBR UNLESS OTHERWISE NOTED.
3. SEE WYOMING SPRINGS DITCH PLAN SHEETS FOR MORE INFORMATION ON DITCHES.
4. ALL EXISTING M/H & WATER VALVES SHALL BE RAISED TO FINAL GRADE PRIOR TO PAVING PER CORR ITEM NO. 506.

WYOMING SPRINGS
SEGMENT 1
ROUND ROCK, TX

ROUND ROCK TEXAS

halff
13620 BRANTWICK DR
BLDG C, STE 100
AUSTIN, TX 78729
(512) 777-4800
TBPELS FIRM #312

Revision No.	Date	Description

F-312 4/5/23
STATE OF TEXAS
JEFFREY L. NAGY
133255
LICENSED
PROFESSIONAL ENGINEER

100% SUBMITTAL

Project No.:	36179.002
Issued:	4/17/2023
Drawn By:	SG
Checked By:	JN
Scale:	1"=40'

Sheet Title
WYOMING SPRINGS DR ROADWAY PLAN & PROFILE (5 OF 12)

89
Sheet Number

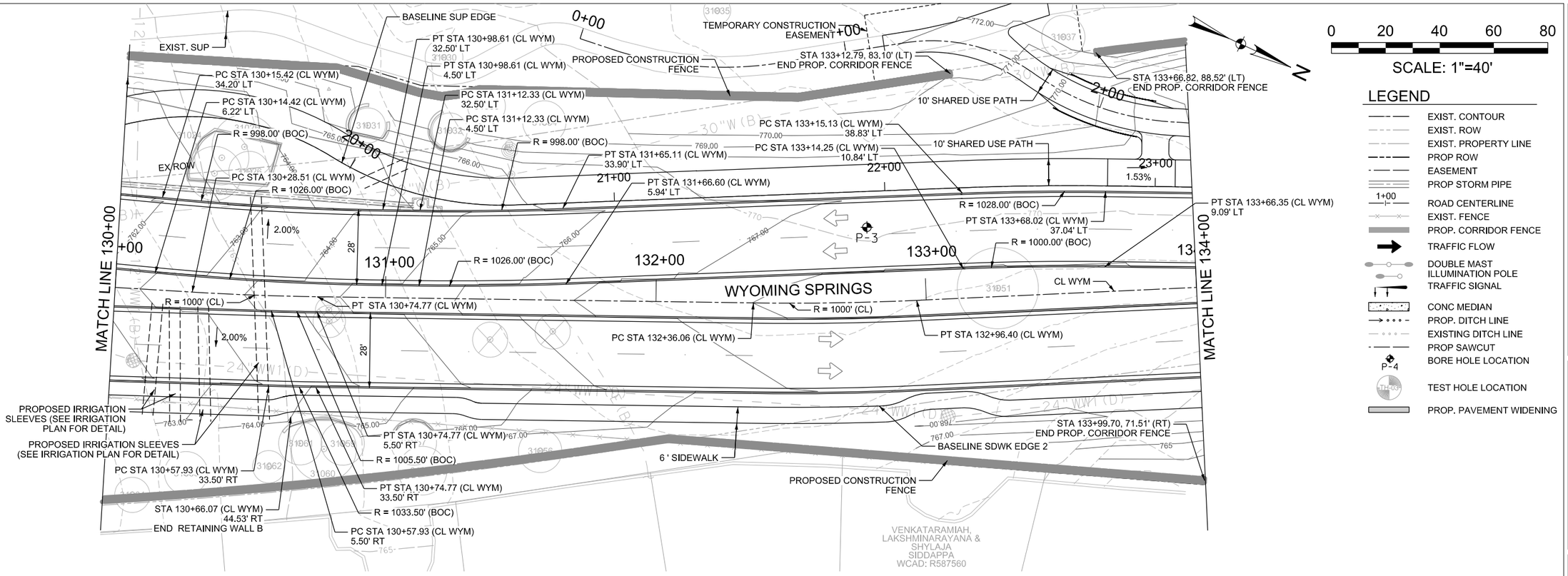

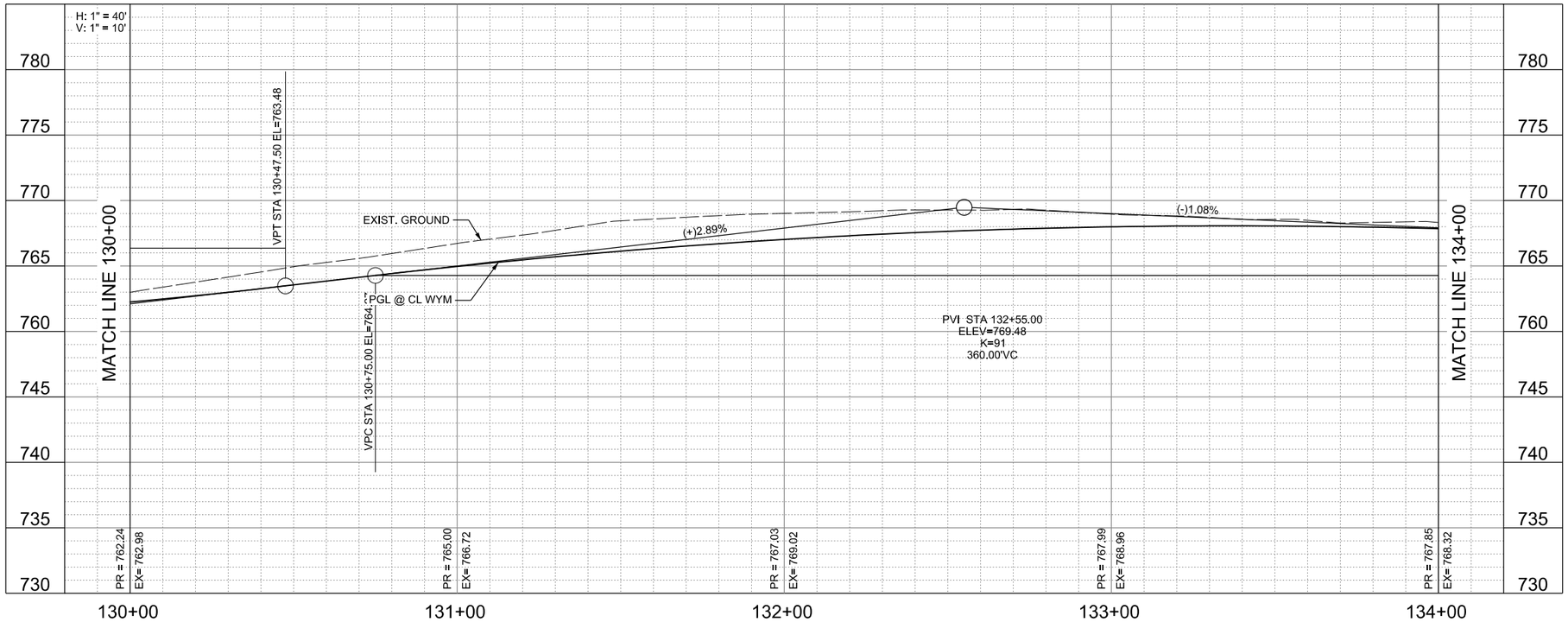

NOTES:

1. CALLOUTS ARE MEASURED TO BACK OF CURB OR EDGE OF PAVEMENT UNLESS OTHERWISE NOTED.
2. ALL STA/OFFSET CALLOUTS ARE FROM WYM/TNR/SBR UNLESS OTHERWISE NOTED.
3. SEE WYOMING SPRINGS DITCH PLAN SHEETS FOR MORE INFORMATION ON DITCHES.
4. ALL EXISTING M/H & WATER VALVES SHALL BE RAISED TO FINAL GRADE PRIOR TO PAVING PER CORR ITEM NO. 506.

WYOMING SPRINGS
SEGMENT 1
ROUND ROCK, TX

ROUND ROCK TEXAS

halff
13620 BRANTWICK DR
BLDG C, STE 100
AUSTIN, TX 78729
(512) 777-4600
TBPELS FIRM #312

Revision No.	Date	Description

STATE OF TEXAS
JEFFREY L. NAGY
133255
LICENSED
PROFESSIONAL ENGINEER
4/17/23

100% SUBMITTAL

Project No.:	36179.002
Issued:	4/17/2023
Drawn By:	SG
Checked By:	JN
Scale:	1"=40'

Sheet Title
WYOMING SPRINGS DR ROADWAY PLAN & PROFILE (6 OF 12)

90
Sheet Number

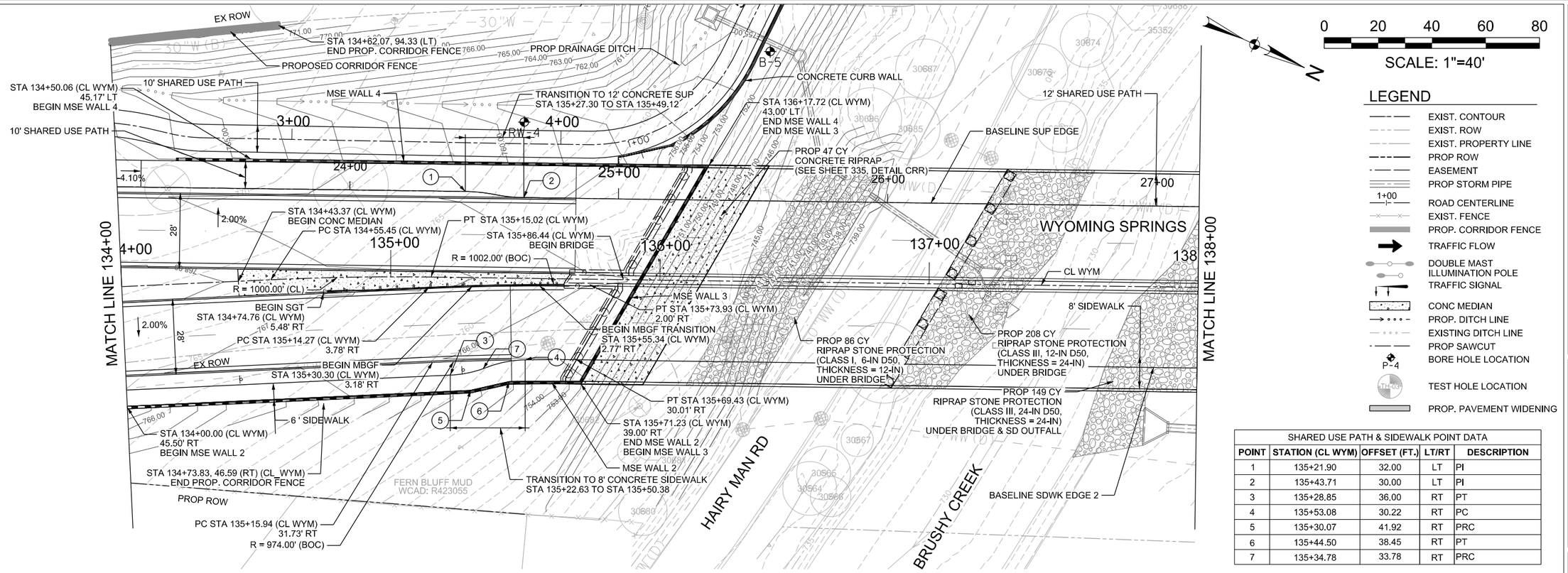

LEGEND

- EXIST. CONTOUR
- EXIST. ROW
- EXIST. PROPERTY LINE
- PROP ROW
- EASEMENT
- PROP STORM PIPE
- 1+00 ROAD CENTERLINE
- EXIST. FENCE
- PROP. CORRIDOR FENCE
- TRAFFIC FLOW
- DOUBLE MAST ILLUMINATION POLE
- TRAFFIC SIGNAL
- CONC MEDIAN
- PROP. DITCH LINE
- EXISTING DITCH LINE
- PROP SAWCUT
- P-4 BORE HOLE LOCATION
- TH-03 TEST HOLE LOCATION
- PROP. PAVEMENT WIDENING

SHARED USE PATH & SIDEWALK POINT DATA				
POINT	STATION (CL WYM)	OFFSET (FT.)	LT/RT	DESCRIPTION
1	135+21.90	32.00	LT	PI
2	135+43.71	30.00	LT	PI
3	135+28.85	36.00	RT	PT
4	135+53.08	30.22	RT	PC
5	135+30.07	41.92	RT	PRC
6	135+44.50	38.45	RT	PT
7	135+34.78	33.78	RT	PRC

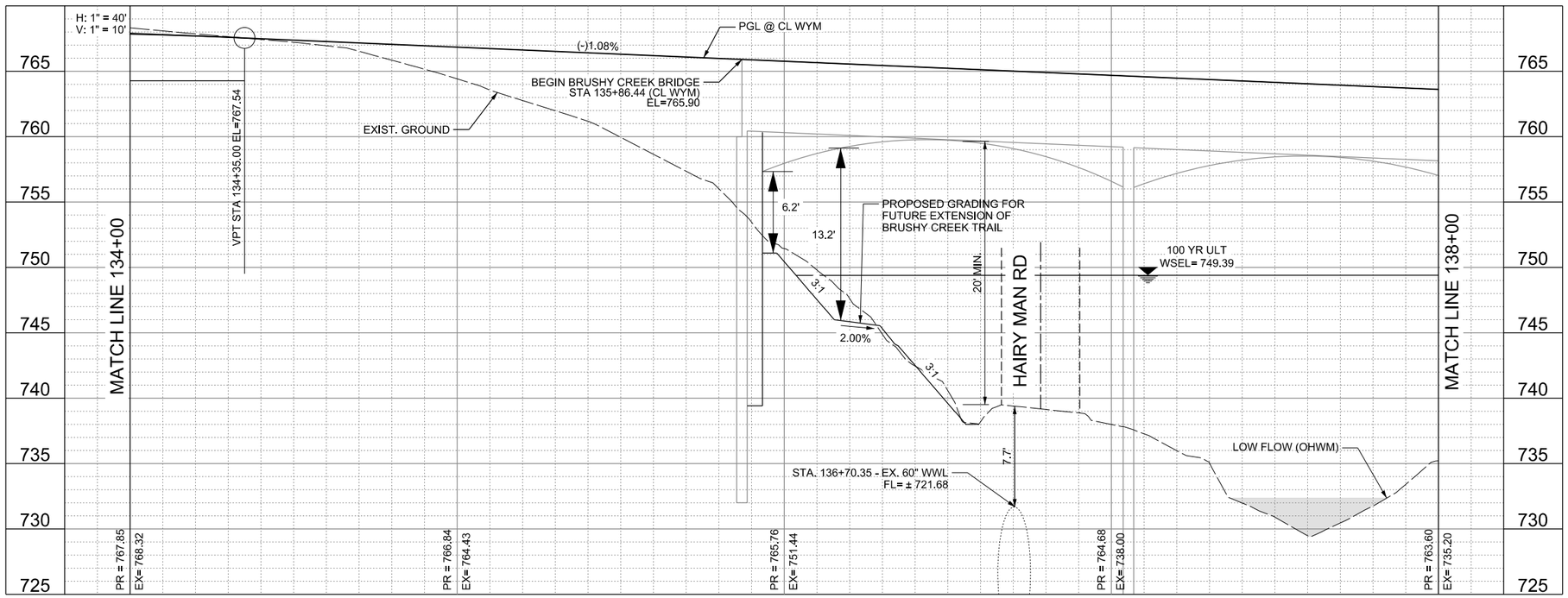

NOTES:

1. CALLOUTS ARE MEASURED TO BACK OF CURB OR EDGE OF PAVEMENT UNLESS OTHERWISE NOTED.
2. ALL STA/OFFSET CALLOUTS ARE FROM WYM/TNR/SBR UNLESS OTHERWISE NOTED.
3. SEE WYOMING SPRINGS DITCH PLAN SHEETS FOR MORE INFORMATION ON DITCHES.
4. ALL EXISTING M/H & WATER VALVES SHALL BE RAISED TO FINAL GRADE PRIOR TO PAVING PER CORR ITEM NO. 506.

WYOMING SPRINGS
SEGMENT 1
ROUND ROCK, TX

ROUND ROCK TEXAS

halff
13620 BRANTWICK DR
BLDG C, STE 100
AUSTIN, TX 78729
(512) 777-4800
TBPELS FIRM #312

Revision No.	Date	Description

F-312 4/5/23
STATE OF TEXAS
JEFFREY L. NAGY
133255
LICENSED
PROFESSIONAL ENGINEER

100% SUBMITTAL

Project No.:	36179.002
Issued:	4/28/2023
Drawn By:	SG
Checked By:	JN
Scale:	1"=40'

Sheet Title
WYOMING SPRINGS DR
ROADWAY PLAN &
PROFILE (7 OF 12)

91
Sheet Number

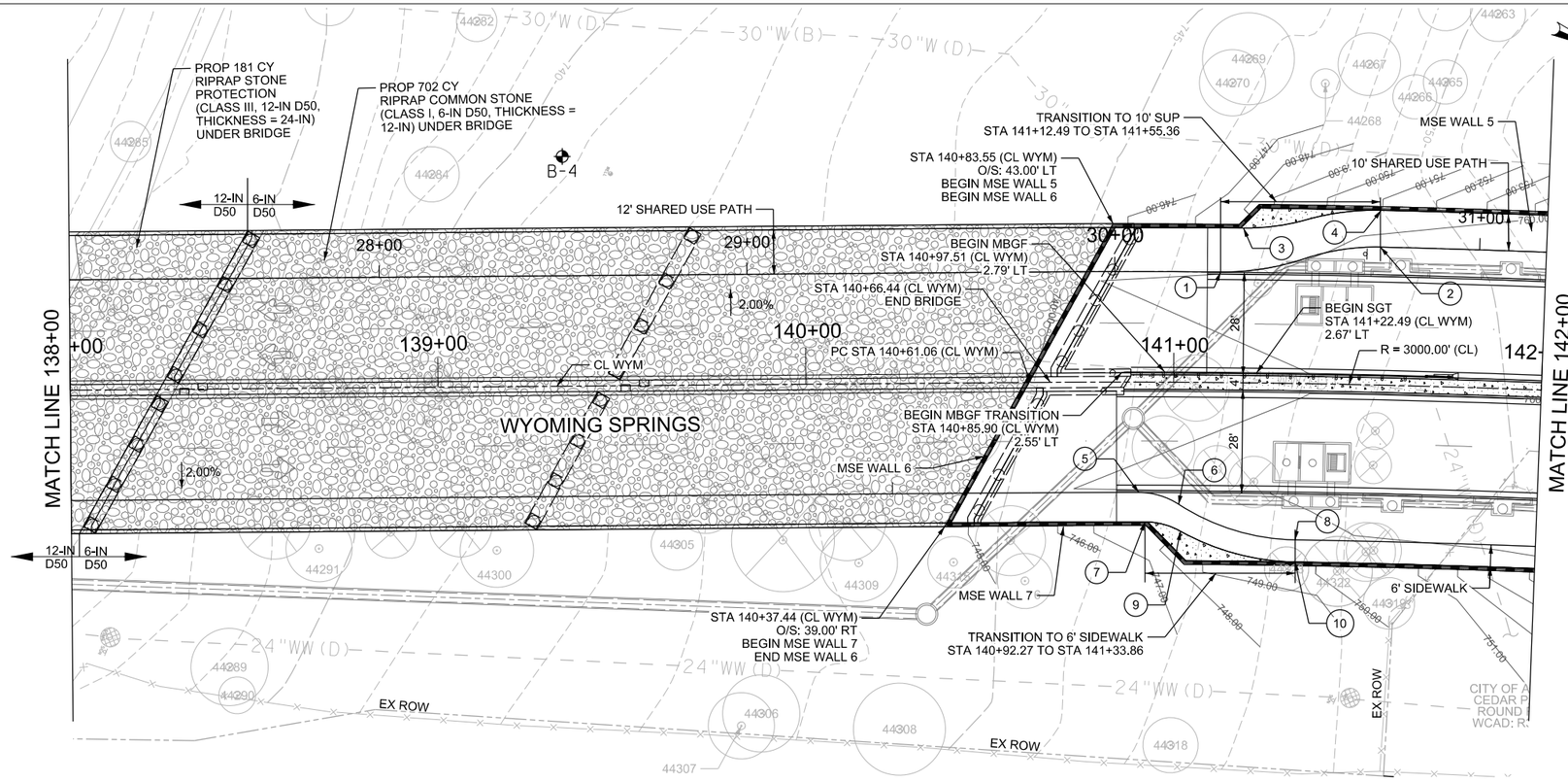

LEGEND

- EXIST. CONTOUR
- EXIST. ROW
- EXIST. PROPERTY LINE
- PROP ROW
- EASEMENT
- PROP STORM PIPE
- 1+00 ROAD CENTERLINE
- EXIST. FENCE
- PROP. CORRIDOR FENCE
- TRAFFIC FLOW
- DOUBLE MAST ILLUMINATION POLE
- TRAFFIC SIGNAL
- CONC MEDIAN
- PROP. DITCH LINE
- EXISTING DITCH LINE
- PROP SAWCUT
- P-4 BORE HOLE LOCATION
- TH-03 TEST HOLE LOCATION
- PROP. PAVEMENT WIDENING

SHARED USE PATH & SIDEWALK POINT DATA				
POINT	STATION (CL WYM)	OFFSET (FT.)	LT/RT	DESCRIPTION
1	141+12.49	30.00	LT	PC
2	141+55.36	37.47	LT	PRC
3	141+17.37	42.00	LT	PT
4	141+46.93	47.47	LT	PC
5	140+90.58	30.00	RT	PRC
6	141+01.56	33.18	RT	PRC
7	140+92.30	38.00	RT	PC
8	141+11.99	48.50	RT	PRC
9	141+02.13	40.49	RT	PRC
10	141+33.76	48.50	RT	PRC

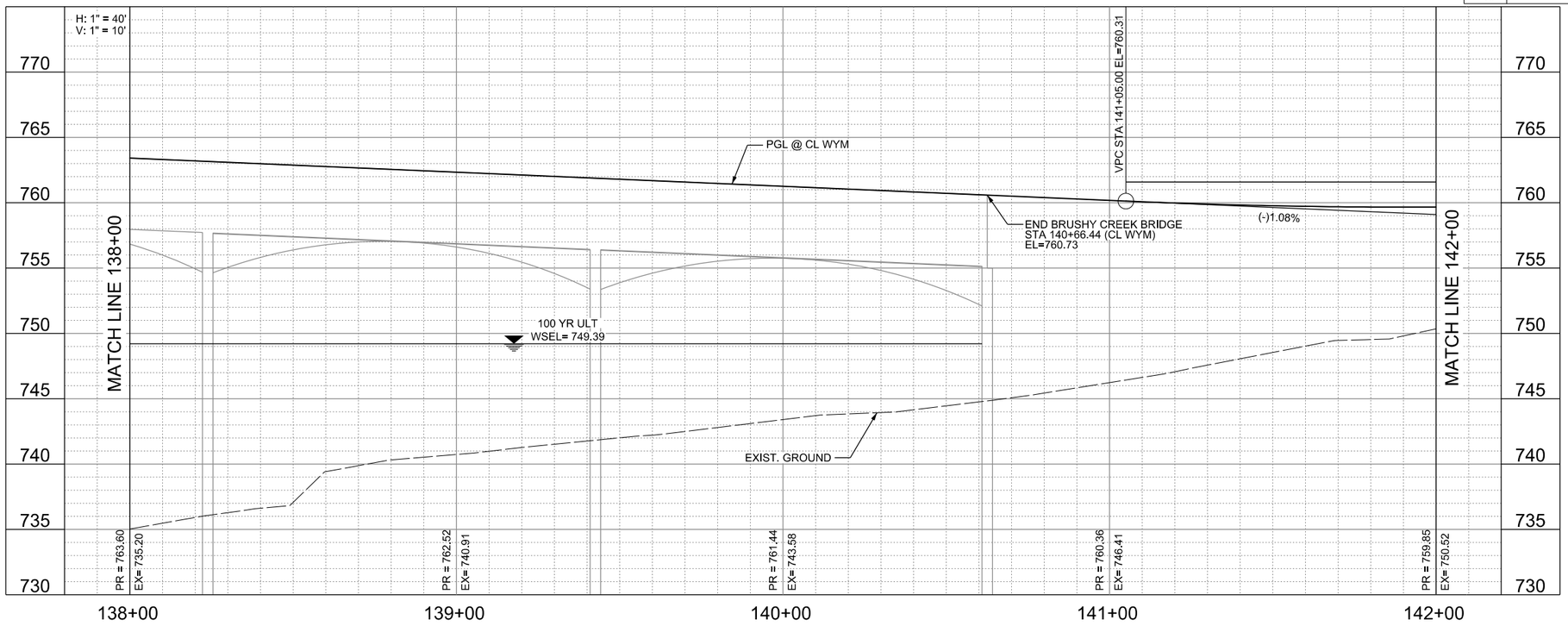

NOTES:

1. CALLOUTS ARE MEASURED TO BACK OF CURB OR EDGE OF PAVEMENT UNLESS OTHERWISE NOTED.
2. ALL STA/OFFSET CALLOUTS ARE FROM WYM/TNR/SBR UNLESS OTHERWISE NOTED.
3. SEE WYOMING SPRINGS DITCH PLAN SHEETS FOR MORE INFORMATION ON DITCHES.
4. ALL EXISTING M/H & WATER VALVES SHALL BE RAISED TO FINAL GRADE PRIOR TO PAVING PER CORR ITEM NO. 506.

BEGIN CORRIDOR FENCE
STA 141+57.00 (CL_WYM)
129.10' LT

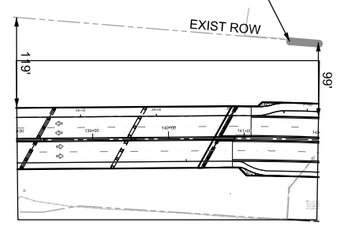

ROW KEY MAP

WYOMING SPRINGS
SEGMENT 1
ROUND ROCK, TX

ROUND ROCK TEXAS

halff
13620 BRANTWICK DR
BLDG C, STE 100
AUSTIN, TX 78729
(512) 777-4800
TBPELS FIRM #312

Revision No.	Date	Description

F-312 4/5/23
STATE OF TEXAS
JEFFREY L. NAGY
133255
LICENSED PROFESSIONAL ENGINEER

100% SUBMITTAL

Project No.:	36179.002
Issued:	4/28/2023
Drawn By:	SG
Checked By:	JN
Scale:	1"=40'

Sheet Title
WYOMING SPRINGS DR ROADWAY PLAN & PROFILE (8 OF 12)

92
Sheet Number

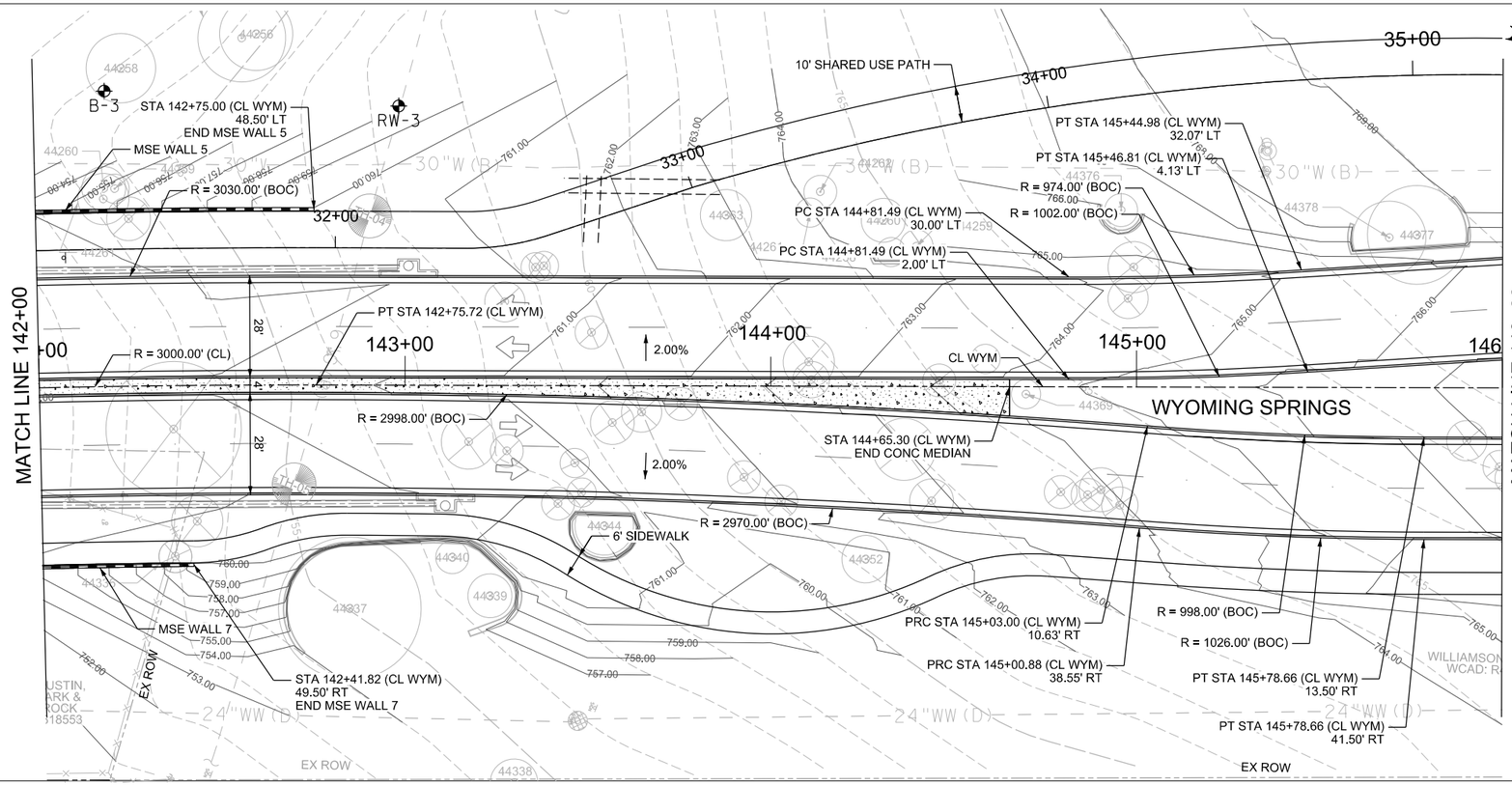

0 20 40 60 80

SCALE: 1"=40'

LEGEND

- EXIST. CONTOUR
- EXIST. ROW
- EXIST. PROPERTY LINE
- PROP ROW
- EASEMENT
- PROP STORM PIPE
- 1+00 ROAD CENTERLINE
- EXIST. FENCE
- PROP. CORRIDOR FENCE
- TRAFFIC FLOW
- DOUBLE MAST ILLUMINATION POLE
- TRAFFIC SIGNAL
- CONC MEDIAN
- PROP. DITCH LINE
- EXISTING DITCH LINE
- PROP SAWCUT
- P-4 BORE HOLE LOCATION
- TH-03 TEST HOLE LOCATION
- PROP. PAVEMENT WIDENING

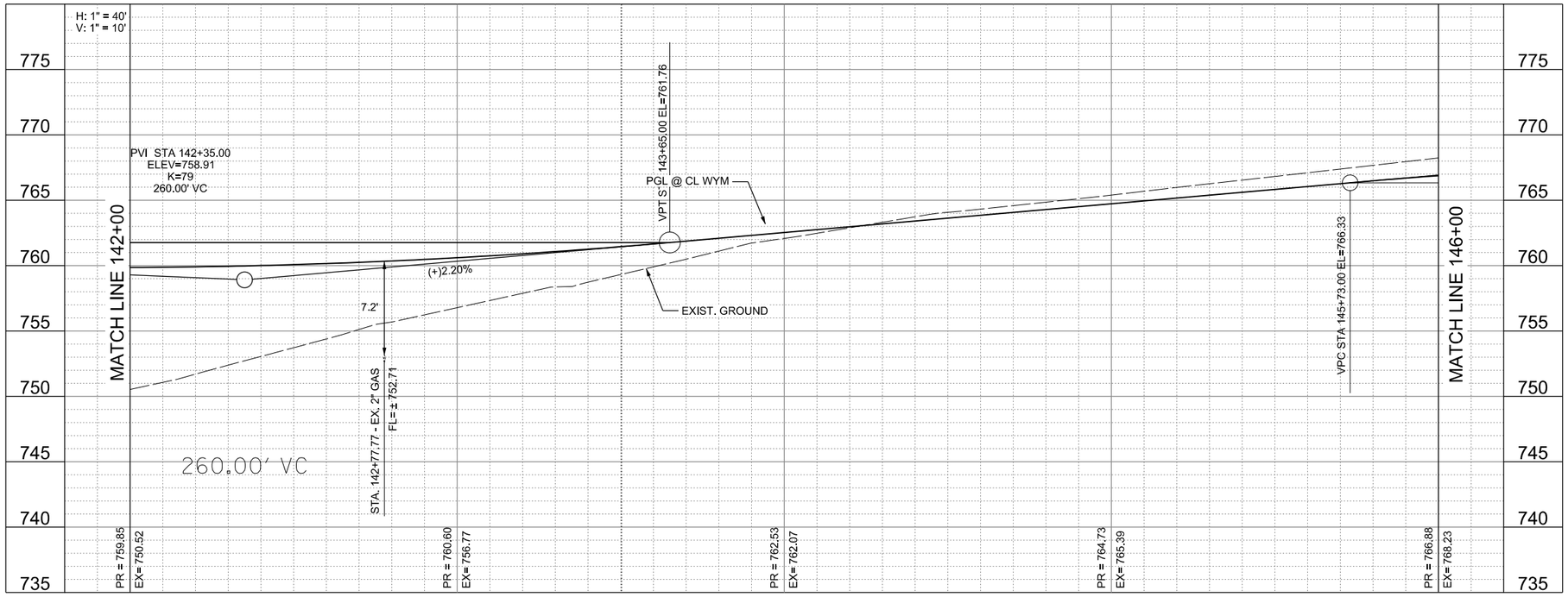

NOTES:

1. CALLOUTS ARE MEASURED TO BACK OF CURB OR EDGE OF PAVEMENT UNLESS OTHERWISE NOTED.
2. ALL STA/OFFSET CALLOUTS ARE FROM WYM/TNR/SBR UNLESS OTHERWISE NOTED.
3. SEE WYOMING SPRINGS DITCH PLAN SHEETS FOR MORE INFORMATION ON DITCHES.
4. ALL EXISTING M/H & WATER VALVES SHALL BE RAISED TO FINAL GRADE PRIOR TO PAVING PER CORR ITEM NO. 506.

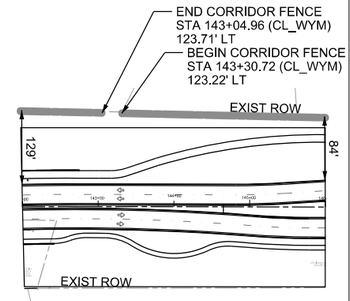

ROW KEY MAP

WYOMING SPRINGS
SEGMENT 1
ROUND ROCK, TX

ROUND ROCK TEXAS

halff
13620 BRANTWICK DR
BLDG C, STE 100
AUSTIN, TX 78729
(512) 777-4600
TBPELS FIRM #312

Revision No.	Date	Description

F-312 4/17/23
STATE OF TEXAS
JEFFREY L NAGY
133255
LICENSED
PROFESSIONAL ENGINEER

100% SUBMITTAL

Project No.:	36179.002
Issued:	4/17/2023
Drawn By:	SG
Checked By:	JN
Scale:	1"=40'

Sheet Title
WYOMING SPRINGS DR
ROADWAY PLAN &
PROFILE (9 OF 12)

93
Sheet Number

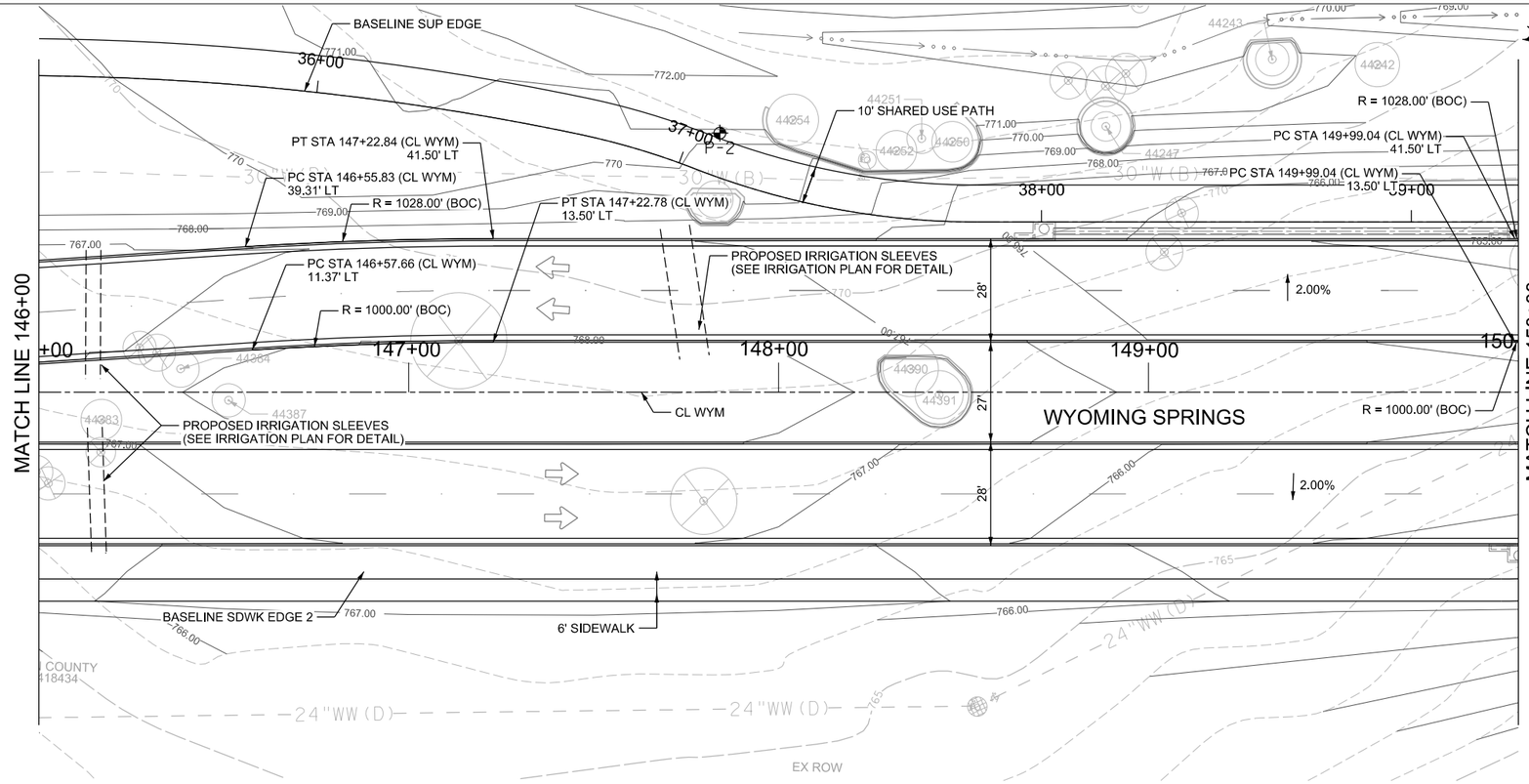

LEGEND

- EXIST. CONTOUR
- EXIST. ROW
- EXIST. PROPERTY LINE
- PROP ROW
- EASEMENT
- PROP STORM PIPE
- 1+00 ROAD CENTERLINE
- EXIST. FENCE
- PROP. CORRIDOR FENCE
- TRAFFIC FLOW
- DOUBLE MAST ILLUMINATION POLE
- TRAFFIC SIGNAL
- CONC MEDIAN
- PROP. DITCH LINE
- EXISTING DITCH LINE
- PROP SAWCUT
- P-4 BORE HOLE LOCATION
- TH-03 TEST HOLE LOCATION
- PROP. PAVEMENT WIDENING

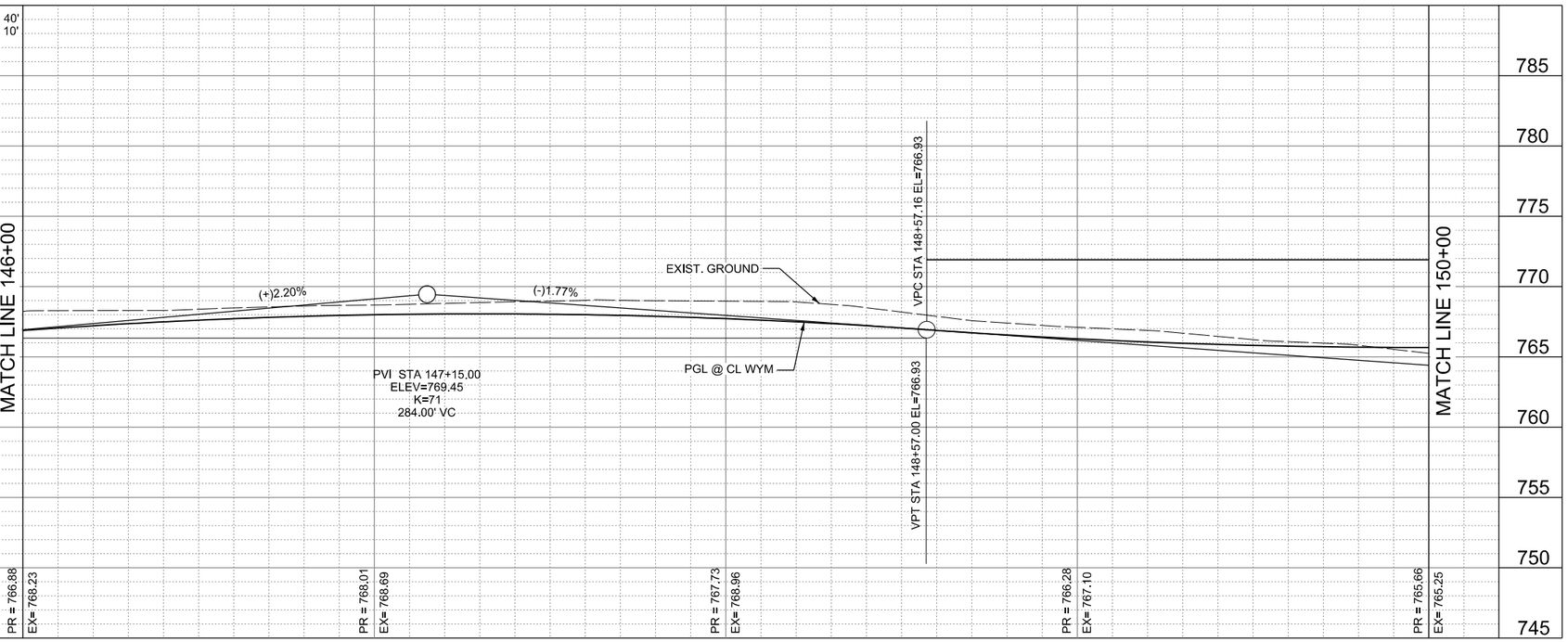

NOTES:

1. CALLOUTS ARE MEASURED TO BACK OF CURB OR EDGE OF PAVEMENT UNLESS OTHERWISE NOTED.
2. ALL STA/OFFSET CALLOUTS ARE FROM WYM/TNR/SBR UNLESS OTHERWISE NOTED.
3. SEE WYOMING SPRINGS DITCH PLAN SHEETS FOR MORE INFORMATION ON DITCHES.
4. ALL EXISTING M/H & WATER VALVES SHALL BE RAISED TO FINAL GRADE PRIOR TO PAVING PER CORR ITEM NO. 506.

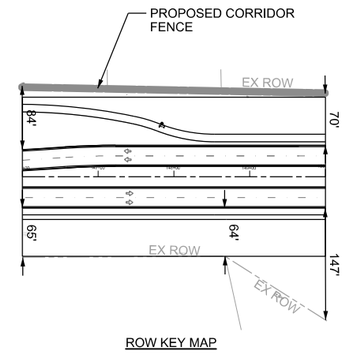

ROW KEY MAP

WYOMING SPRINGS
SEGMENT 1
ROUND ROCK, TX

ROUND ROCK TEXAS

halff
13620 BRANTWICK DR
BLDG C, STE 100
AUSTIN, TX 78729
(512) 777-4600
TBPELS FIRM #312

Revision No.	Date	Description

STATE OF TEXAS
JEFFREY L NAGY
133255
LICENSED
PROFESSIONAL ENGINEER
4/17/23

100% SUBMITTAL

Project No.:	36179.002
Issued:	4/17/2023
Drawn By:	SG
Checked By:	JN
Scale:	1"=40'

Sheet Title
WYOMING SPRINGS DR
ROADWAY PLAN &
PROFILE (10 OF 12)

94
Sheet Number

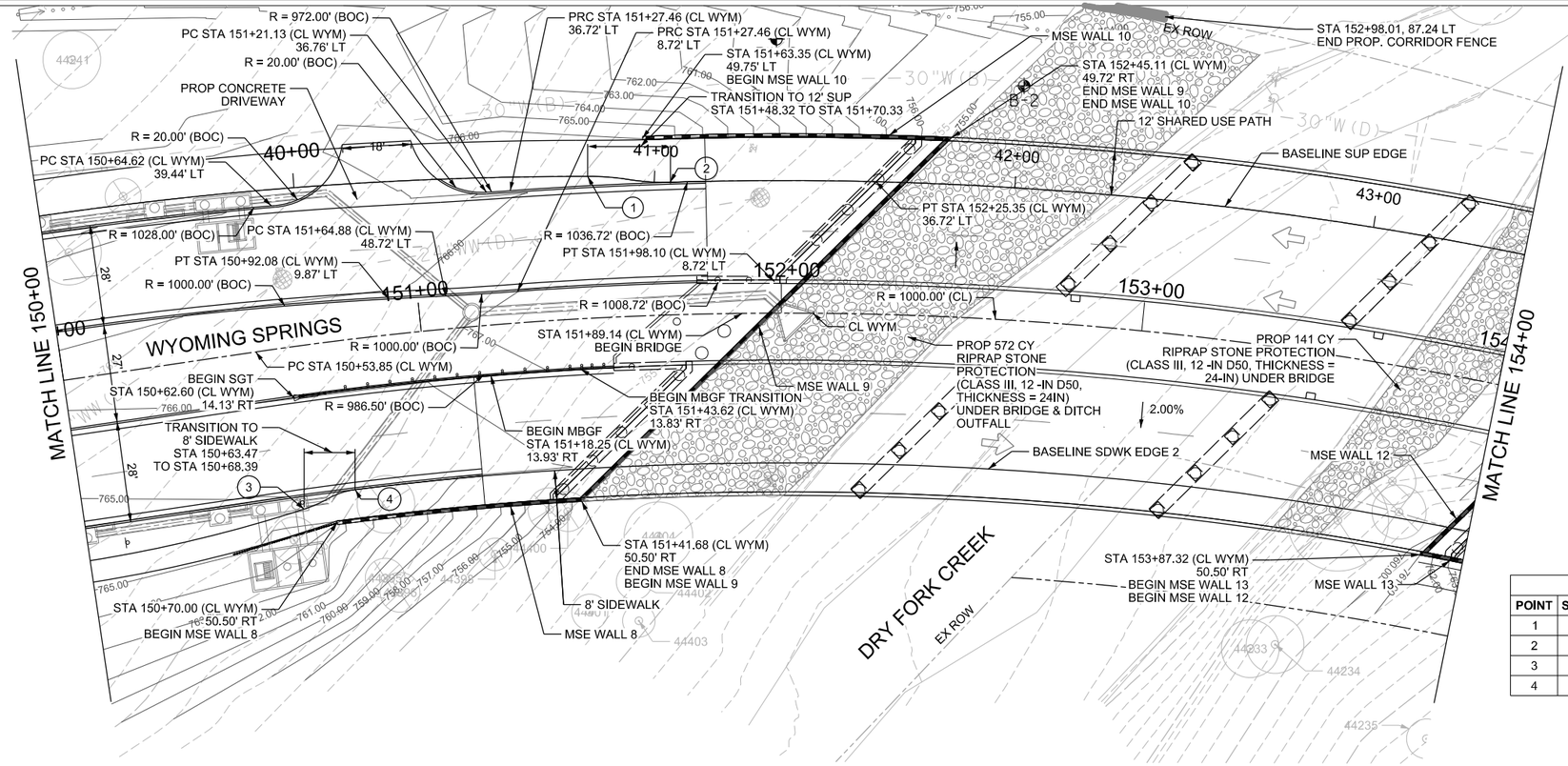

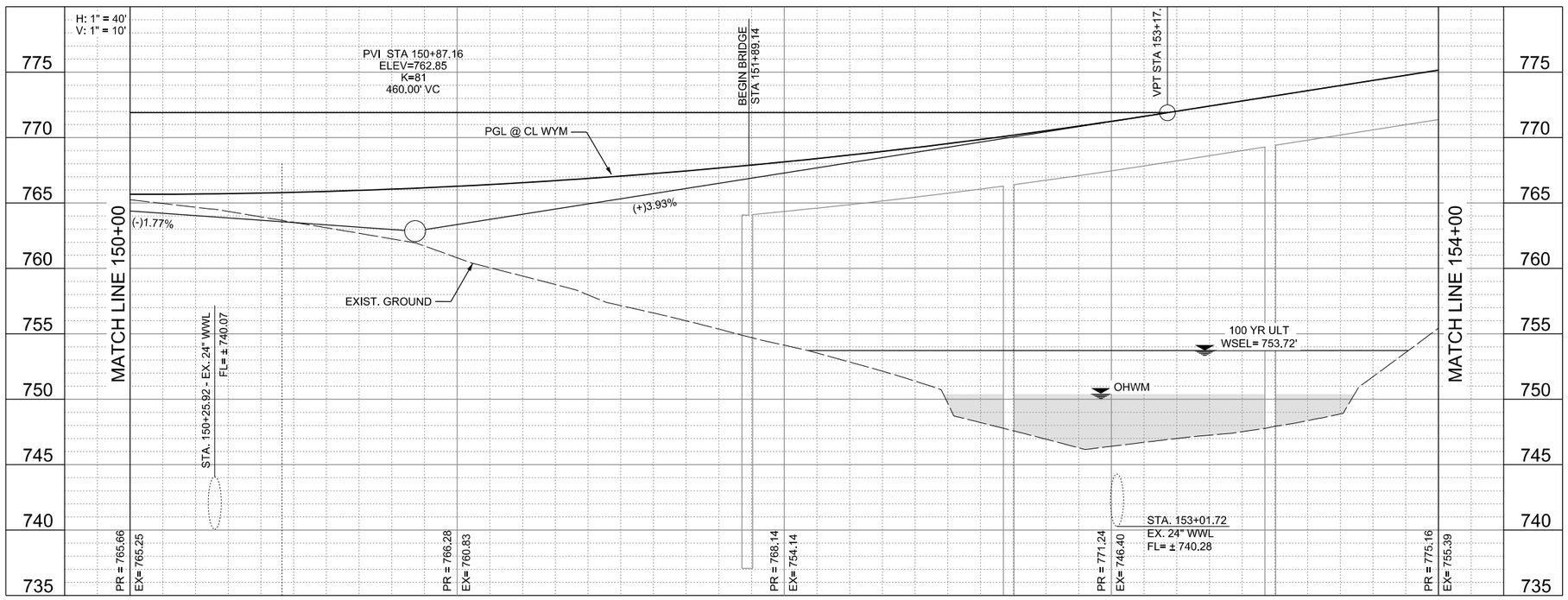

LEGEND

- EXIST. CONTOUR
- EXIST. ROW
- EXIST. PROPERTY LINE
- PROP ROW
- EASEMENT
- PROP STORM PIPE
- 1+00 ROAD CENTERLINE
- EXIST. FENCE
- PROP. CORRIDOR FENCE
- TRAFFIC FLOW
- DOUBLE MAST ILLUMINATION POLE
- TRAFFIC SIGNAL
- CONC MEDIAN
- PROP. DITCH LINE
- EXISTING DITCH LINE
- PROP SAWCUT
- P-4 BORE HOLE LOCATION
- TH-03 TEST HOLE LOCATION
- PROP. PAVEMENT WIDENING

SHARED USE PATH & SIDEWALK POINT DATA				
POINT	STATION (CL WYM)	OFFSET (FT.)		DESCRIPTION
1	151+59.70	38.83	LT	PI
2	151+64.70	36.72	LT	PI
3	150+62.30	44.80	RT	PI
4	150+68.39	41.50	RT	PI

NOTES:

1. CALLOUTS ARE MEASURED TO BACK OF CURB OR EDGE OF PAVEMENT UNLESS OTHERWISE NOTED.
2. ALL STA/OFFSET CALLOUTS ARE FROM WYM/TNR/SBR UNLESS OTHERWISE NOTED.
3. SEE WYOMING SPRINGS DITCH PLAN SHEETS FOR MORE INFORMATION ON DITCHES.
4. ALL EXISTING M/H & WATER VALVES SHALL BE RAISED TO FINAL GRADE PRIOR TO PAVING PER CORR ITEM NO. 506.

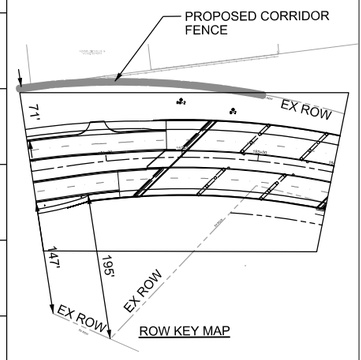

WYOMING SPRINGS
SEGMENT 1
ROUND ROCK, TX

ROUND ROCK TEXAS

halff
13620 BRANTWICK DR
BLDG C, STE 100
AUSTIN, TX 78729
(512) 777-4800
TBPELS FIRM #312

Revision No.	Date	Description

F-312 4/5/23
STATE OF TEXAS
JEFFREY L NAGY
133255
LICENSED
PROFESSIONAL ENGINEER

100% SUBMITTAL

Project No.:	36179.002
Issued:	4/28/2023
Drawn By:	SG
Checked By:	JN
Scale:	1"=40'

Sheet Title
WYOMING SPRINGS DR
ROADWAY PLAN &
PROFILE (11 OF 12)

95
Sheet Number

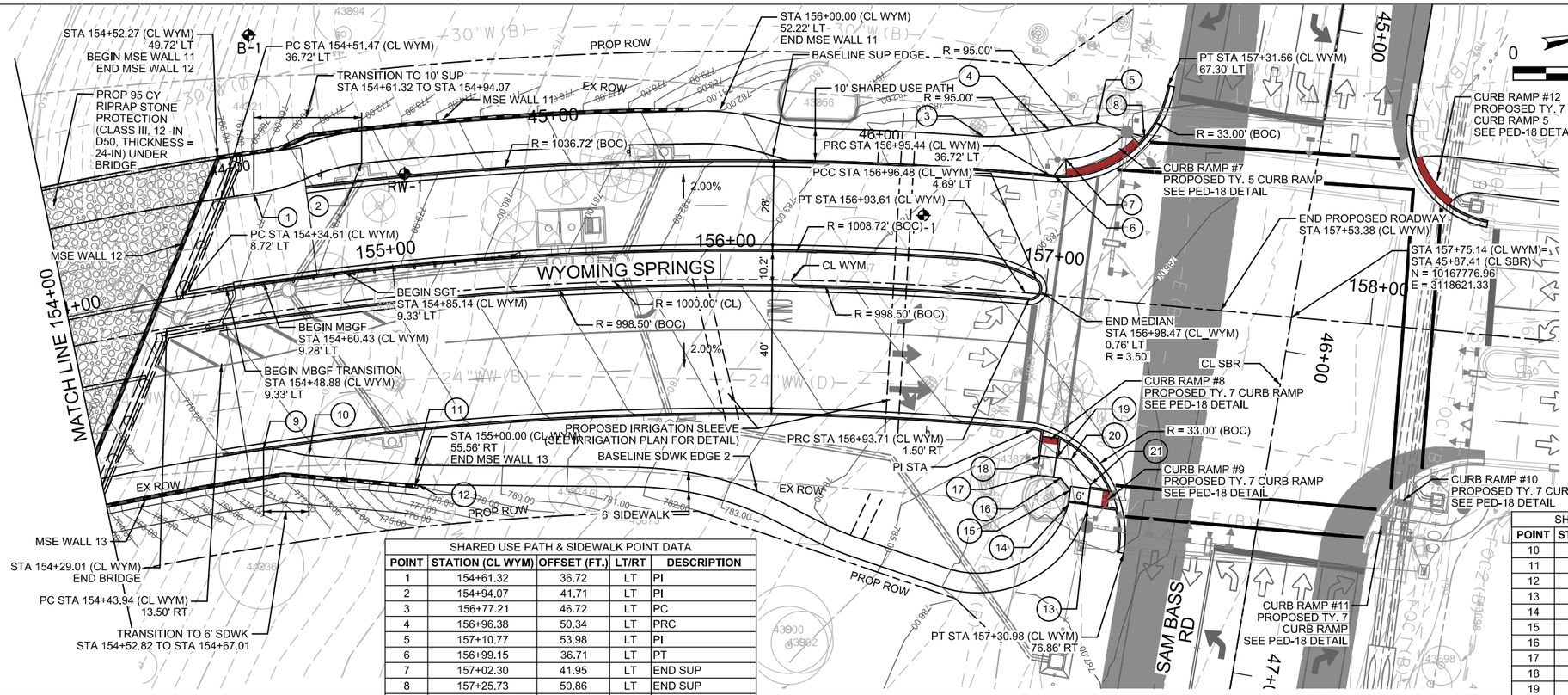

SHARED USE PATH & SIDEWALK POINT DATA

POINT	STATION (CL WYM)	OFFSET (FT.)	LT/RT	DESCRIPTION
1	154+61.32	36.72	LT	PI
2	154+94.07	41.71	LT	PI
3	156+77.21	46.72	LT	PC
4	156+96.38	50.34	LT	PRC
5	157+10.77	53.98	LT	PI
6	156+99.15	36.71	LT	PT
7	157+02.30	41.95	LT	END SUP
8	157+25.73	50.86	LT	END SUP
9	154+52.82	41.50	RT	PI

SHARED USE PATH & SIDEWALK POINT DATA (CONT.)

POINT	STATION (CL WYM)	OFFSET (FT.)	LT/RT	DESCRIPTION
10	154+67.01	45.25	RT	PI
11	155+00.73	52.00	RT	PI
12	155+01.02	58.16	RT	PI
13	157+18.68	64.13	RT	PT
14	157+12.70	63.50	RT	PT
15	157+12.85	59.11	RT	PI
16	157+09.61	55.63	RT	PI
17	157+02.45	55.37	RT	PI
18	157+02.66	49.37	RT	END SIDEWALK
19	157+07.66	49.55	RT	END SIDEWALK
20	157+12.30	49.72	RT	PI
21	157+18.94	56.84	RT	PI

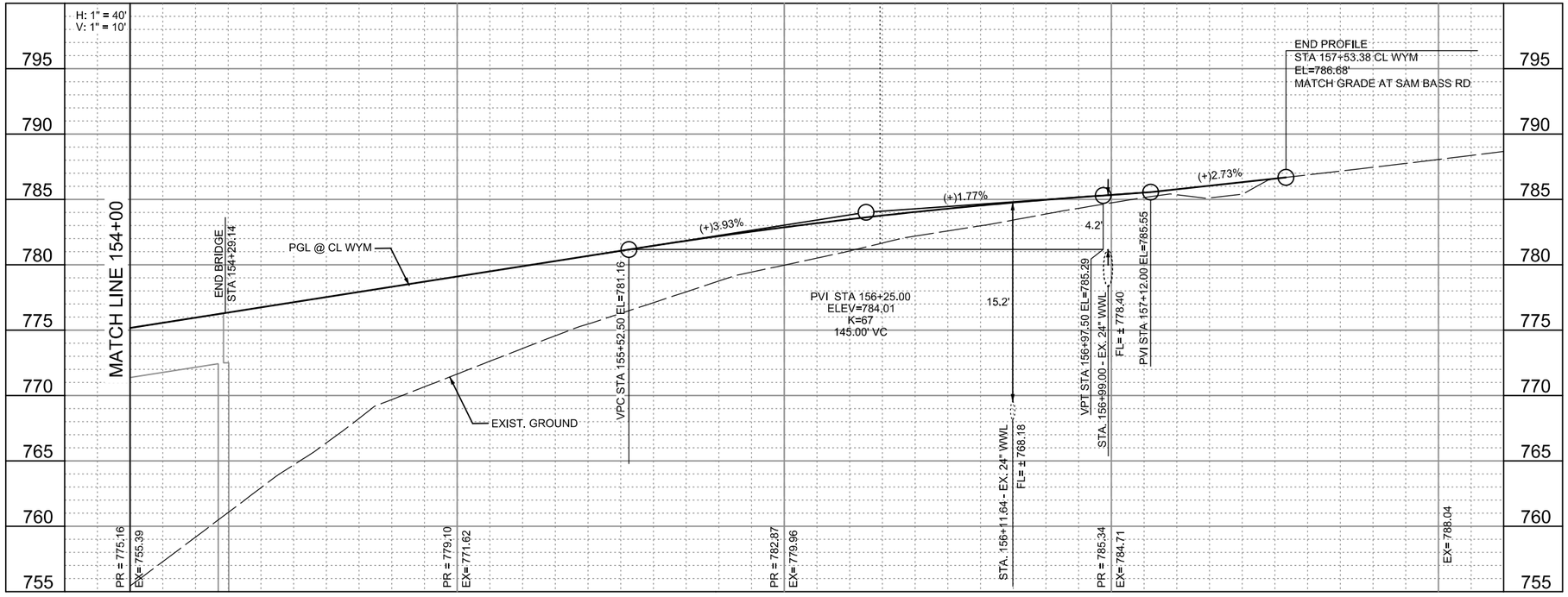

NOTES:

1. CALLOUTS ARE MEASURED TO BACK OF CURB OR EDGE OF PAVEMENT UNLESS OTHERWISE NOTED.
2. ALL STA/OFFSET CALLOUTS ARE FROM WYM/TNR/SBR UNLESS OTHERWISE NOTED.
3. SEE WYOMING SPRINGS DITCH PLAN SHEETS FOR MORE INFORMATION ON DITCHES.
4. ALL EXISTING M/H & WATER VALVES SHALL BE RAISED TO FINAL GRADE PRIOR TO PAVING PER CORR ITEM NO. 506.

WYOMING SPRINGS
SEGMENT 1
ROUND ROCK, TX

ROUND ROCK TEXAS

halff
13620 BRANTWICK DR
BLDG C, STE 100
AUSTIN, TX 78729
(512) 777-4600
TBPELS FIRM #312

Revision No.	Date	Description

F-312 6/14/23
STATE OF TEXAS
JEFFREY L. NAGY
133255
LICENSED PROFESSIONAL ENGINEER

100% SUBMITTAL

Project No.:	36179.002
Issued:	6/24/2023
Drawn By:	SG
Checked By:	JN
Scale:	1"=40'

Sheet Title
WYOMING SPRINGS DR ROADWAY PLAN & PROFILE (12 OF 12)

96
Sheet Number

SHARED USE PATH & SIDEWALK POINT DATA				
POINT	STATION (CL_SUP)	OFFSET (FT.)	LT/RT	DESCRIPTION
1	1+20.98	4.00	RT	PC
2	1+71.10	5.00	RT	PRC
3	1+77.37	5.00	RT	PI
4	1+86.91	7.00	RT	PI
5	2+15.23	7.00	RT	PRC
6	2+17.49	9.10	RT	PT
7	2+17.94	12.51	RT	PC
8	2+26.83	11.52	RT	PT
9	2+26.63	7.61	RT	PC

SHARED USE PATH & SIDEWALK POINT DATA (CONT.)				
POINT	STATION (CL_SUP)	OFFSET (FT.)	LT/RT	DESCRIPTION
10	2+27.46	5.00	LT	PI
11	2+16.91	7.00	LT	PI
12	1+86.91	7.00	LT	PI
13	1+76.36	5.00	LT	PT
14	1+58.72	7.69	LT	PC
15	1+58.20	11.07	LT	PT

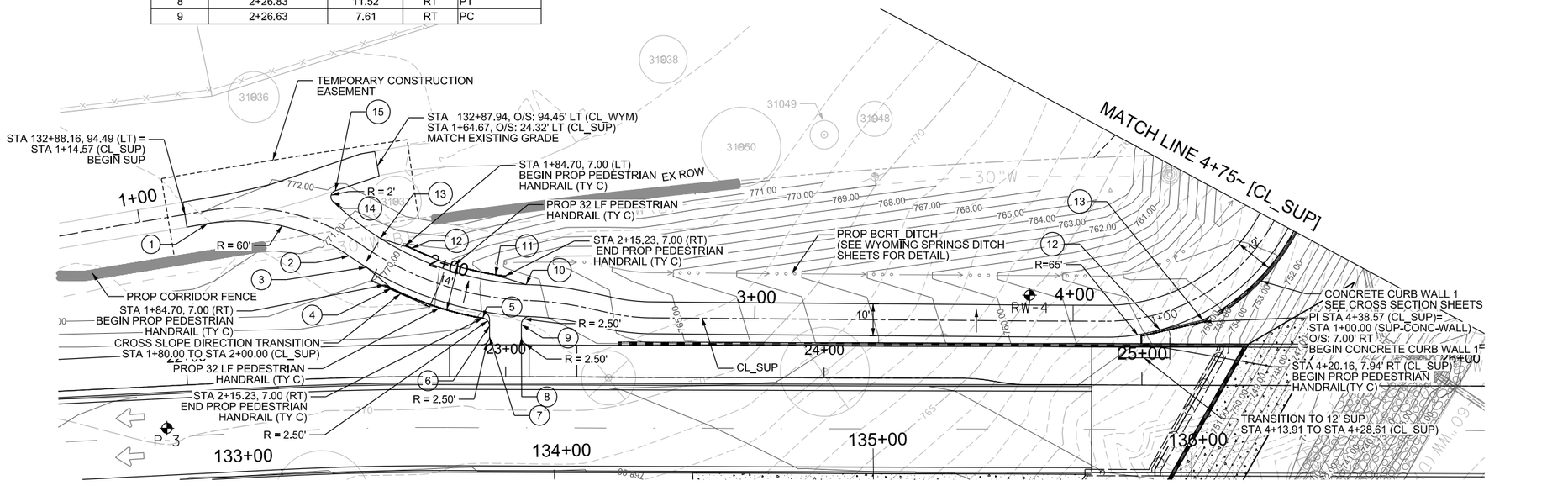

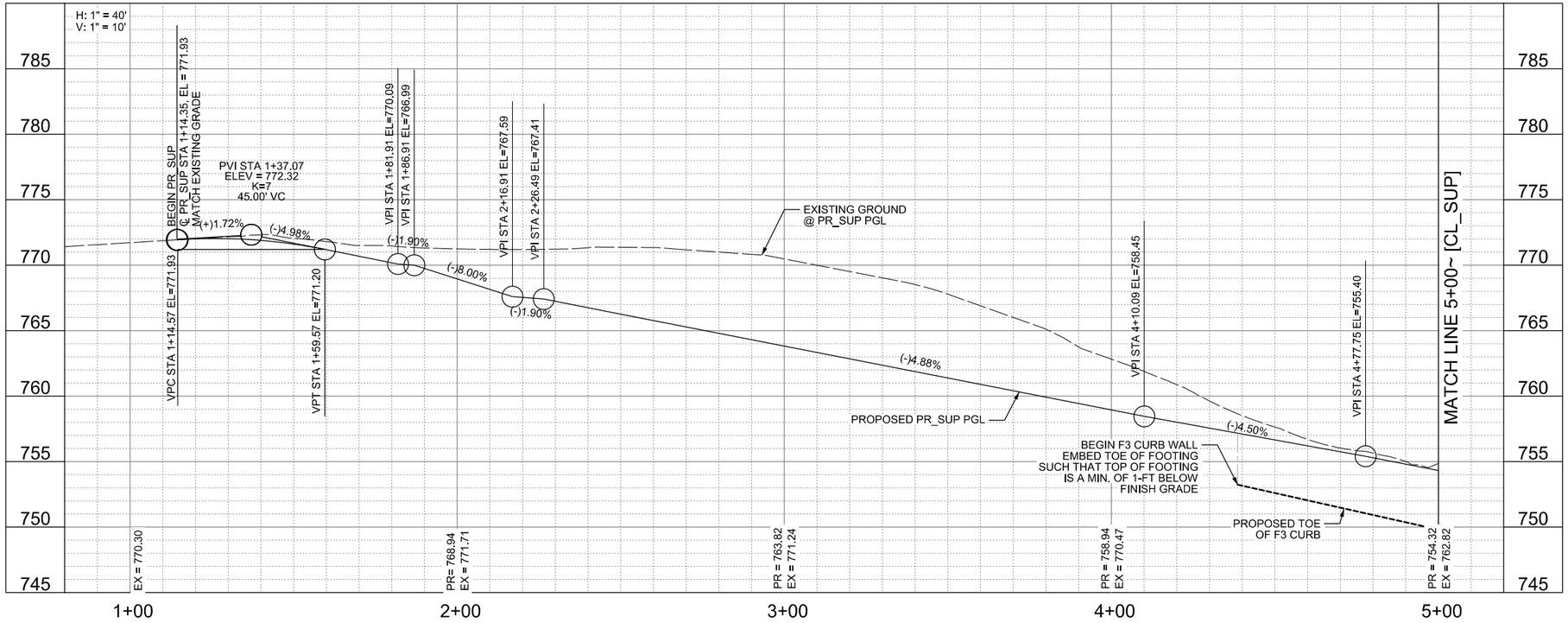

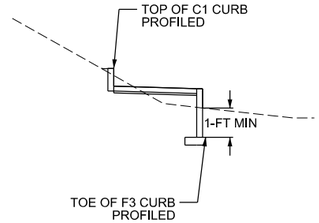

NOTES:

1. CALLOUTS ARE MEASURED TO BACK OF CURB OR EDGE OF PAVEMENT UNLESS OTHERWISE NOTED.
2. ALL STA/OFFSET CALLOUTS ARE FROM WYM/TNR/SBR UNLESS OTHERWISE NOTED.
3. SEE WYOMING SPRINGS DITCH PLAN SHEETS FOR MORE INFORMATION ON DITCHES.
4. ALL EXISTING M/H & WATER VALVES SHALL BE RAISED TO FINAL GRADE PRIOR TO PAVING PER CORR ITEM NO. 506.

0 20 40 60 80

SCALE: 1"=40'

LEGEND

- EXIST. CONTOUR
- EXIST. ROW
- EXIST. PROPERTY LINE
- PROP ROW
- EASEMENT
- PROP STORM PIPE
- 1+00 ROAD CENTERLINE
- EXIST. FENCE
- PROP. CORRIDOR FENCE
- TRAFFIC FLOW
- DOUBLE MAST ILLUMINATION POLE
- TRAFFIC SIGNAL
- CONC MEDIAN
- PROP. DITCH LINE
- EXISTING DITCH LINE
- PROP SAWCUT
- P-4 BORE HOLE LOCATION
- TH-03 TEST HOLE LOCATION
- PROP. PAVEMENT WIDENING

WYOMING SPRINGS
SEGMENT 1
ROUND ROCK, TX

ROUND ROCK TEXAS

halff
13620 BRANTWICK DR
BLDG C, STE 100
AUSTIN, TX 78729
(512) 777-4800
TBPELS FIRM #312

Revision No.	Date	Description

F-3R U.S. 79

STATE OF TEXAS
JEFFREY L. NAGY
133255
LICENSED
PROFESSIONAL ENGINEER

100% SUBMITTAL

Project No.:	36179.002
Issued:	4/17/2023
Drawn By:	SG
Checked By:	JN
Scale:	1"=40'

Sheet Title
BCRT SUP
PLAN AND PROFILE
(1 OF 2)

97
Sheet Number

SHARED USE PATH & SIDEWALK POINT DATA (CONT.)				
POINT	STATION (CL_SUP)	OFFSET (FT.)	LT/RT	DESCRIPTION
1	5+80.76	5.00	LT	PI
2	6+98.57	5.00	RT	PI
3	7+06.06	5.00	RT	PC
4	7+40.31	5.00	LT	END SUP
5	7+11.01	5.00	RT	PC
6	7+52.03	5.00	LT	END SUP

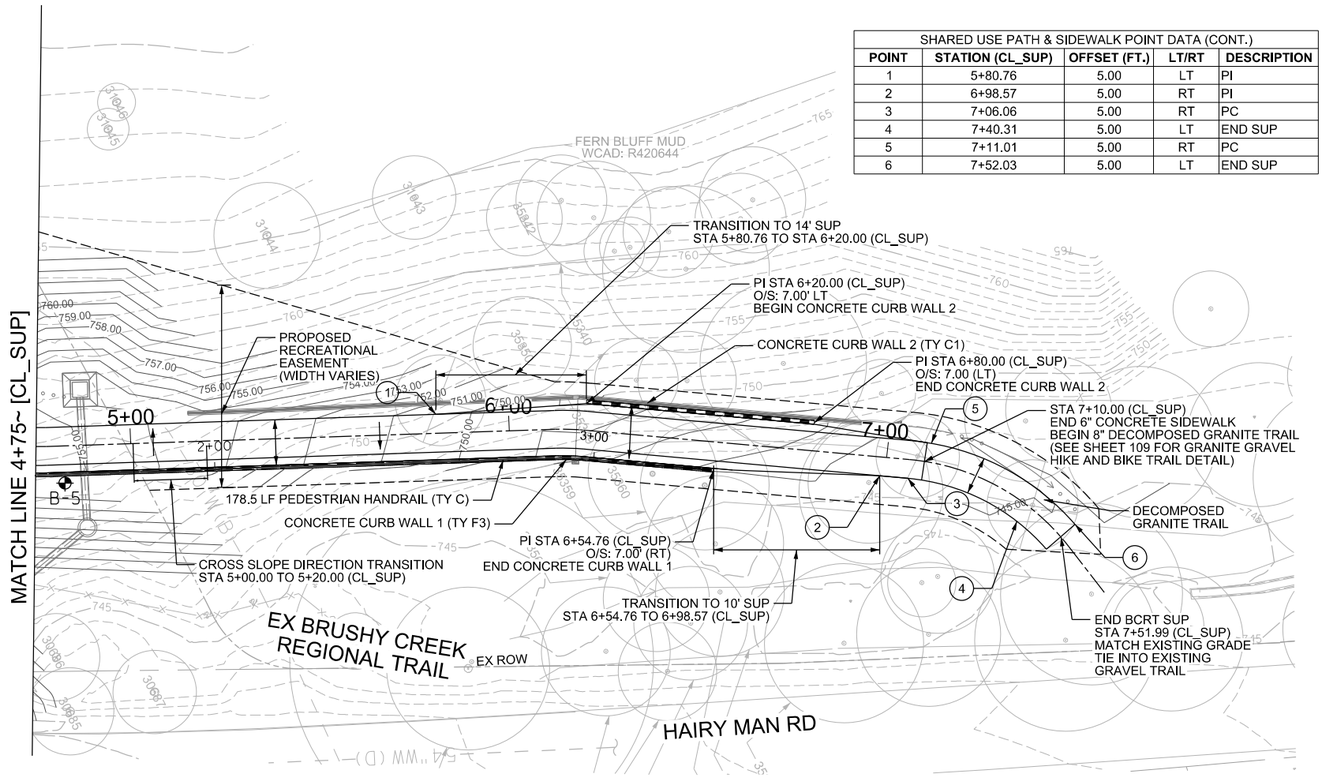

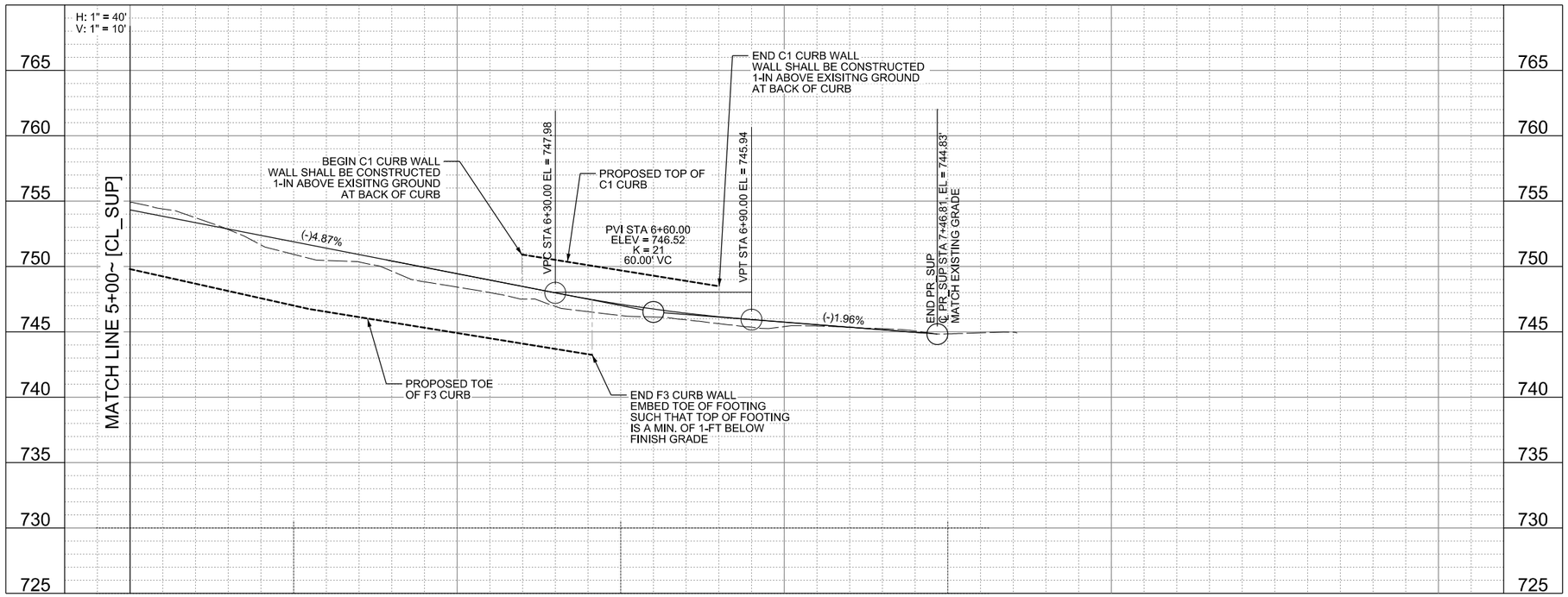

NOTES:

1. CALLOUTS ARE MEASURED TO BACK OF CURB OR EDGE OF PAVEMENT UNLESS OTHERWISE NOTED.
2. ALL STA/OFFSET CALLOUTS ARE FROM WYM/TNR/SBR UNLESS OTHERWISE NOTED.
3. SEE WYOMING SPRINGS DITCH PLAN SHEETS FOR MORE INFORMATION ON DITCHES.
4. ALL EXISTING M/H & WATER VALVES SHALL BE RAISED TO FINAL GRADE PRIOR TO PAVING PER CORR ITEM NO. 506.

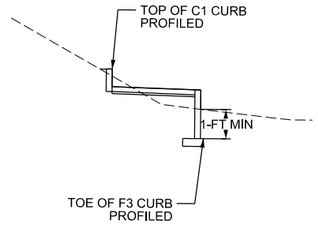



LEGEND

- EXIST. CONTOUR
- EXIST. ROW
- EXIST. PROPERTY LINE
- PROP ROW
- EASEMENT
- PROP STORM PIPE
- 1+00 ROAD CENTERLINE
- EXIST. FENCE
- PROP. CORRIDOR FENCE
- TRAFFIC FLOW
- DOUBLE MAST ILLUMINATION POLE
- TRAFFIC SIGNAL
- CONC MEDIAN
- PROP. DITCH LINE
- EXISTING DITCH LINE
- PROP SAWCUT
- P-4 BORE HOLE LOCATION
- TH-03 TEST HOLE LOCATION
- PROP. PAVEMENT WIDENING

WYOMING SPRINGS
SEGMENT 1
ROUND ROCK, TX

ROUND ROCK TEXAS

halff
13620 BRANTWICK DR
BLDG C, STE 100
AUSTIN, TX 78729
(512) 777-4600
TBPELS FIRM #312

Revision No.	Date	Description

F-312 4/17/23
STATE OF TEXAS
JEFFREY L. NAGY
133255
LICENSED
PROFESSIONAL ENGINEER

100% SUBMITTAL

Project No.:	36179.002
Issued:	4/17/2023
Drawn By:	SG
Checked By:	JN
Scale:	1"=40'

Sheet Title
BCRT SUP
PLAN AND PROFILE
(2 OF 2)

98
Sheet Number

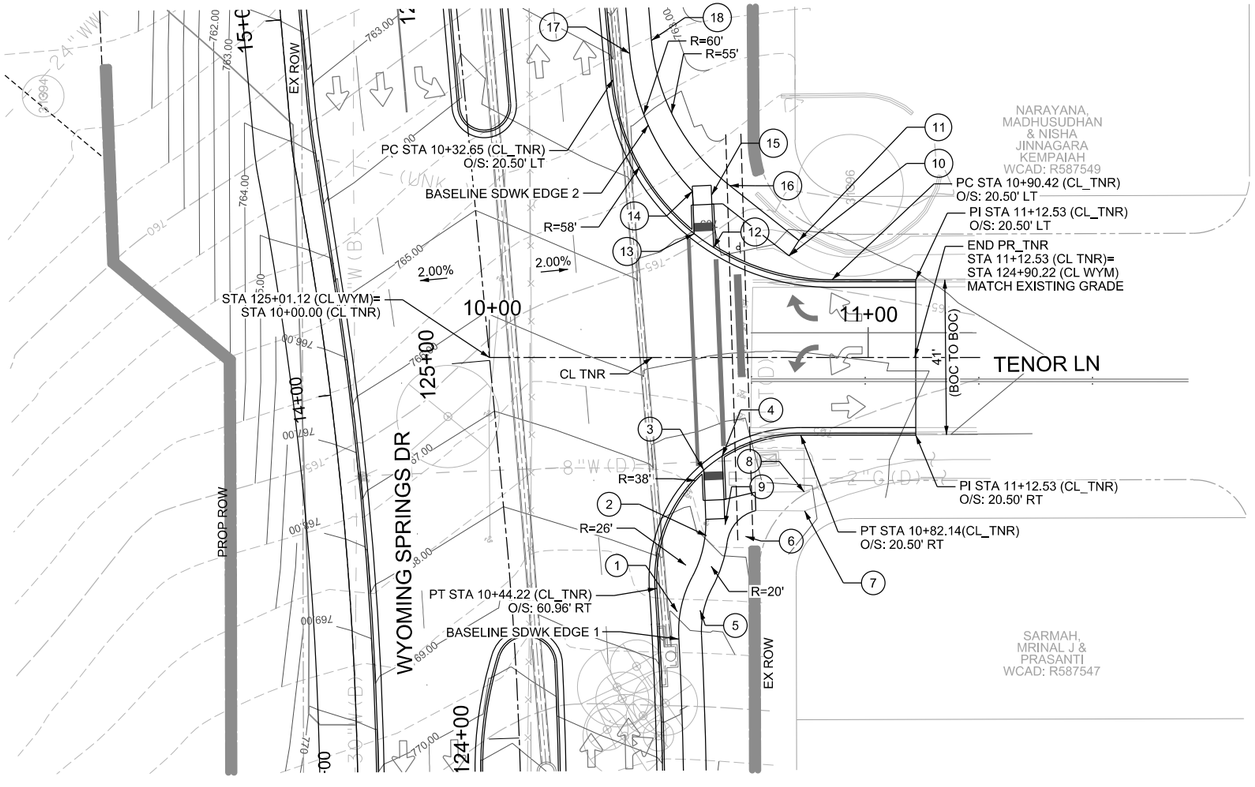

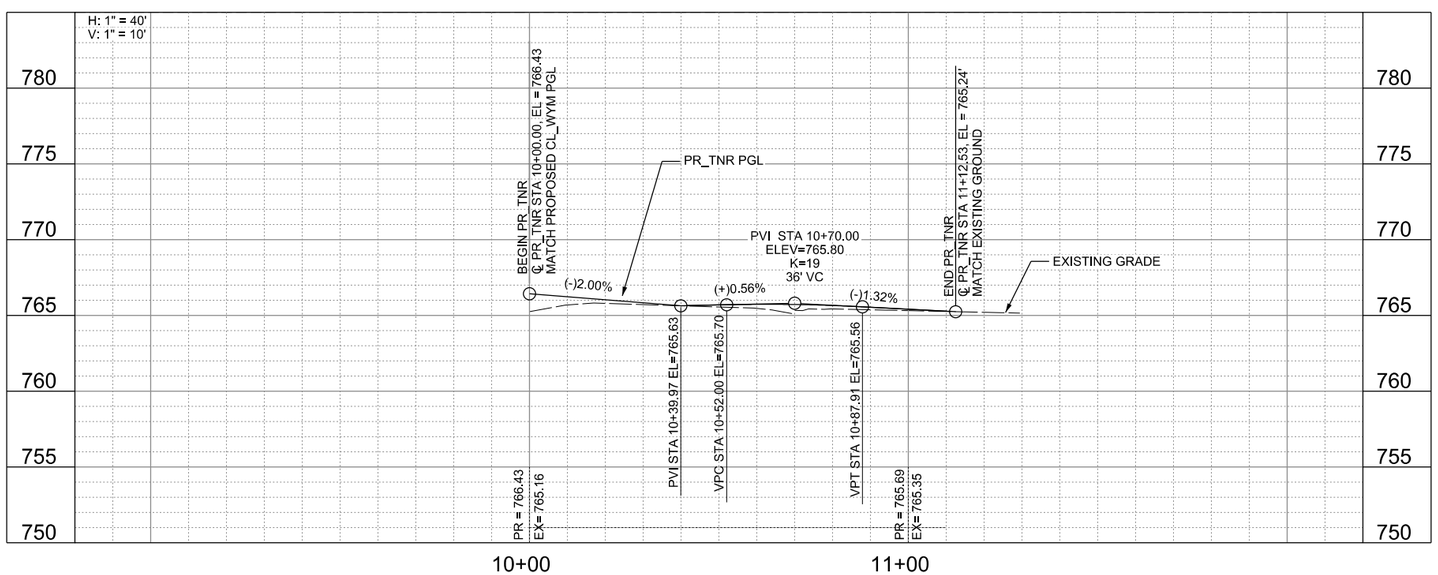

SHARED USE PATH & SIDEWALK POINT DATA				
POINT	STATION (CL TNR)	OFFSET (FT.)	LT/RT	DESCRIPTION
1	10+49.61	67.10	RT	PC
2	10+57.30	47.08	RT	PT
3	10+56.59	29.70	RT	PI
4	10+61.44	26.03	RT	PI
5	10+55.60	66.75	RT	PRC
6	10+67.61	66.75	RT	PT
7	10+83.20	40.48	RT	END SIDEWALK
8	10+83.20	35.51	RT	END SIDEWALK
9	10+62.18	44.17	RT	PI
10	10+79.11	26.85	RT	BEGIN SIDEWALK
11	10+81.69	30.90	RT	BEGIN SIDEWALK
12	10+59.17	29.03	LT	PI
13	10+54.04	32.69	LT	PI
14	10+53.58	43.91	LT	PC
15	10+58.63	42.87	LT	PI
16	10+63.42	45.38	LT	PC
17	10+37.06	80.23	LT	PI
18	10+42.78	83.65	LT	PT

NOTES:

1. CALLOUTS ARE MEASURED TO BACK OF CURB OR EDGE OF PAVEMENT UNLESS OTHERWISE NOTED.

2. ALL STA/OFFSET CALLOUTS ARE FROM WYM/TNR/SBR UNLESS OTHERWISE NOTED.

3. SEE WYOMING SPRINGS DITCH PLAN SHEETS FOR MORE INFORMATION ON DITCHES.

4. ALL EXISTING M/H & WATER VALVES SHALL BE RAISED TO FINAL GRADE PRIOR TO PAVING PER CORR ITEM NO. 506.

N

0 20 40 60 80

SCALE: 1"=40'

LEGEND

- EXIST. CONTOUR
- EXIST. ROW
- EXIST. PROPERTY LINE
- PROP ROW
- EASEMENT
- PROP STORM PIPE
- 1+00 ROAD CENTERLINE
- EXIST. FENCE
- PROP. CORRIDOR FENCE
- TRAFFIC FLOW
- DOUBLE MAST ILLUMINATION POLE
- TRAFFIC SIGNAL
- CONC MEDIAN
- PROP. DITCH LINE
- EXISTING DITCH LINE
- PROP SAWCUT
- P-4 BORE HOLE LOCATION
- TH-03 TEST HOLE LOCATION
- PROP. PAVEMENT WIDENING

WYOMING SPRINGS
SEGMENT 1
ROUND ROCK, TX

ROUND ROCK TEXAS

halff
13620 BRAKWICK DR
BLDG C, STE 100
AUSTIN, TX 78729
(512) 777-4800
TBPELS FIRM #312

Revision No.	Date	Description
.	.	.
.	.	.
.	.	.
.	.	.
.	.	.
.	.	.

F-312 4/5/23

STATE OF TEXAS
JEFFREY L. NAGY
133255
LICENSED
PROFESSIONAL ENGINEER

100% SUBMITTAL

Project No.:	36179.002
Issued:	4/17/2023
Drawn By:	SG
Checked By:	JN
Scale:	1"=40'

Sheet Title
TENOR LN
PLAN AND PROFILE

99
Sheet Number

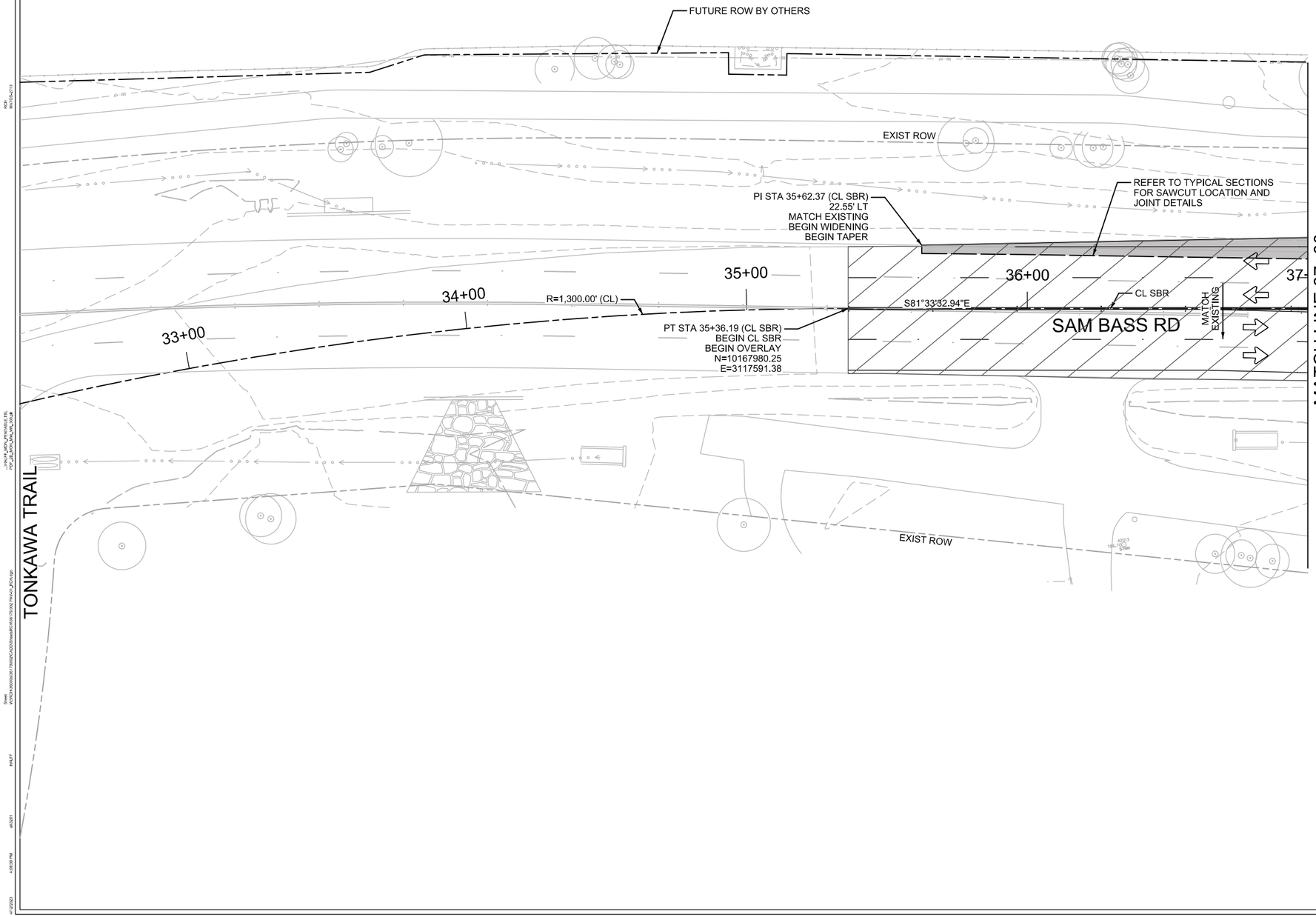



0 20 40 60 80

SCALE: 1"=40'

LEGEND

- EXIST. CONTOUR
- EXIST. ROW
- EXIST. PROPERTY LINE
- PROP ROW
- EASEMENT
- PROP STORM PIPE
- 1+00 ROAD CENTERLINE
- EXIST. FENCE
- PROP. CORRIDOR FENCE
- TRAFFIC FLOW
- DOUBLE MAST ILLUMINATION POLE
- TRAFFIC SIGNAL
- CONC MEDIAN
- PROP. DITCH LINE
- EXISTING DITCH LINE
- PROP SAWCUT
- P-4 BORE HOLE LOCATION
- TH-03 TEST HOLE LOCATION
- PROP. PAVEMENT WIDENING
- OVERLAY

NOTES:

1. CALLOUTS ARE MEASURED TO BACK OF CURB OR EDGE OF PAVEMENT UNLESS OTHERWISE NOTED.

2. ALL STA/OFFSET CALLOUTS ARE FROM WYM/TNR/SBR UNLESS OTHERWISE NOTED.

3. SEE SAM BASS DRAINAGE DITCH PLAN SHEETS FOR MORE INFORMATION ON DITCHES.

4. ALL EXISTING M/H & WATER VALVES SHALL BE RAISED TO FINAL GRADE PRIOR TO PAVING PER CORR ITEM NO. 506.

DESIGN SPEED (MPH)	MIN K VALUE (CREST)	MIN K VALUE (SAG)
50	84	96

VERTICAL CURVE GEOMETRY			
VPI STA	CREST/SAG	VC LENGTH	K VALUE
41+50.00	SAG	300	320
44+25.00	CREST	150	150
46+00.00	SAG	200	130

WYOMING SPRINGS
SEGMENT 1
ROUND ROCK, TX

ROUND ROCK TEXAS

halff
13620 BRANTWICK DR
BLDG C, STE 100
AUSTIN, TX 78729
(512) 777-4800
TBPELS FIRM #312

Revision No.	Date	Description

STATE OF TEXAS
MELANIE S. CLEAVELIN
108945
LICENSED PROFESSIONAL ENGINEER
4/5/23

THE SEAL APPEARING ON THIS DOCUMENT WAS AUTHORIZED BY MELANIE S. CLEAVELIN, P.E. 108945 ON 4/5/2023. ALTERATION OF A SEALED DOCUMENT WITHOUT PROPER AUTHORITY TO DO SO IS UNLAWFUL AND CONSTITUTES AN OFFENSE UNDER THE TEXAS ENGINEERING PRACTICE ACT. THE RECORD COPY OF THIS DRAWING IS ON FILE AT THE OFFICES OF HALFF ASSOCIATES, INC., 1201 NORTH BOWSER RD, RICHARDSON, TEXAS, 75081 / TBPE FIRM #F-312.

100% SUBMITTAL

Project No.:	36179.002
Issued:	4/12/2023
Drawn By:	TM
Checked By:	MC
Scale:	1"=40'

Sheet Title
SAM BASS RD
ROADWAY PLAN
(1 OF 6)

100
Sheet Number

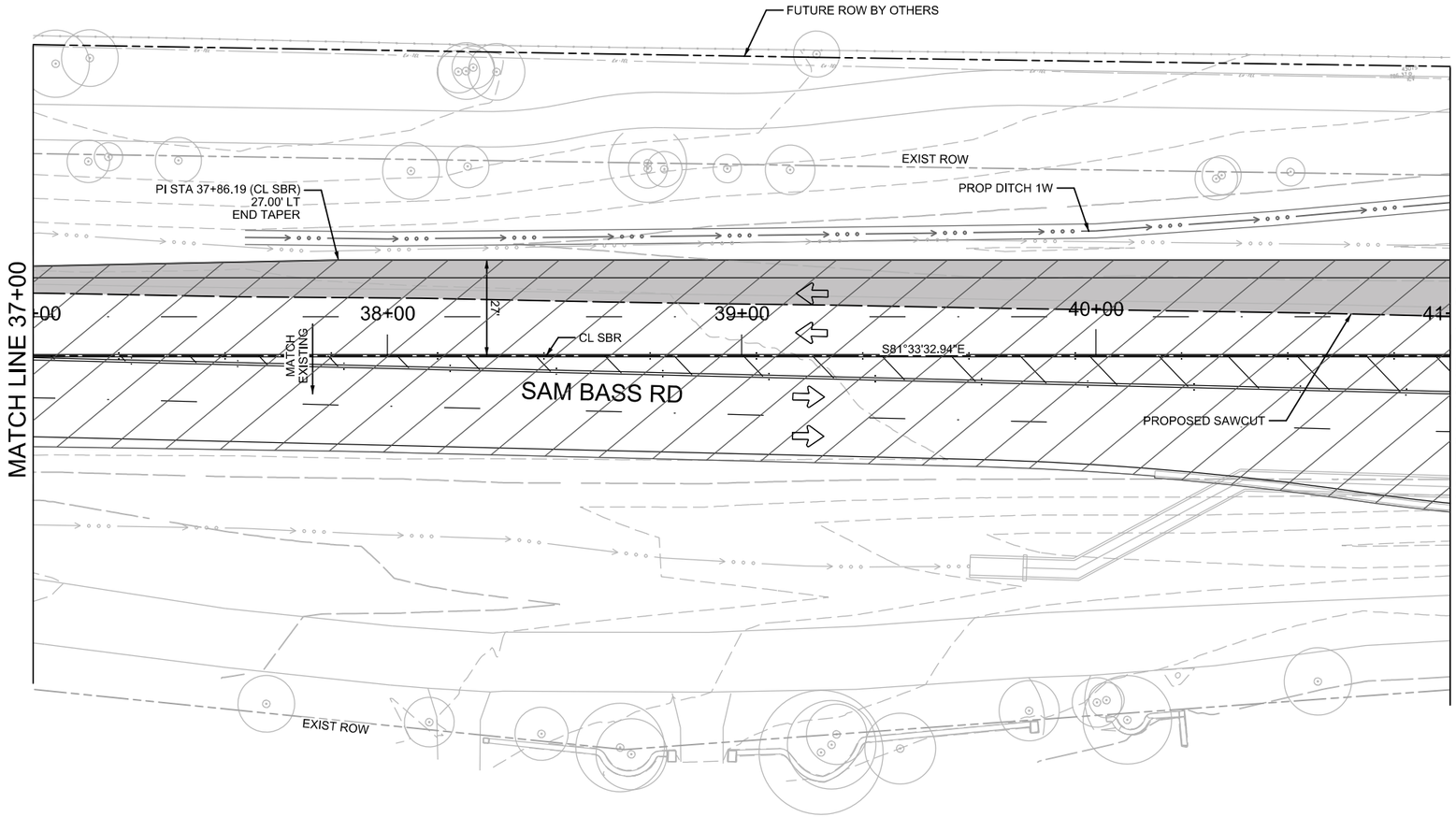



0 20 40 60 80

SCALE: 1"=40'

LEGEND

- EXIST. CONTOUR
- EXIST. ROW
- EXIST. PROPERTY LINE
- PROP ROW
- EASEMENT
- PROP STORM PIPE
- 1+00 ROAD CENTERLINE
- EXIST. FENCE
- PROP. CORRIDOR FENCE
- TRAFFIC FLOW
- DOUBLE MAST ILLUMINATION POLE
- TRAFFIC SIGNAL
- CONC MEDIAN
- PROP. DITCH LINE
- EXISTING DITCH LINE
- PROP SAWCUT
- P-4 BORE HOLE LOCATION
- TH-03 TEST HOLE LOCATION
- PROP. PAVEMENT WIDENING
- OVERLAY

NOTES:

1. CALLOUTS ARE MEASURED TO BACK OF CURB OR EDGE OF PAVEMENT UNLESS OTHERWISE NOTED.

2. ALL STA/OFFSET CALLOUTS ARE FROM WYM/TNR/SBR UNLESS OTHERWISE NOTED.

3. SEE SAM BASS DRAINAGE DITCH PLAN SHEETS FOR MORE INFORMATION ON DITCHES.

4. ALL EXISTING M/H & WATER VALVES SHALL BE RAISED TO FINAL GRADE PRIOR TO PAVING PER CORR ITEM NO. 506.

DESIGN SPEED (MPH)	MIN K VALUE (CREST)	MIN K VALUE (SAG)
50	84	96

VERTICAL CURVE GEOMETRY			
VPI STA	CREST/SAG	VC LENGTH	K VALUE
41+50.00	SAG	300	320
44+25.00	CREST	150	150
46+00.00	SAG	200	130

WYOMING SPRINGS
SEGMENT 1
ROUND ROCK, TX

ROUND ROCK TEXAS

halff
13620 BRANTWICK DR
BLDG C, STE 100
AUSTIN, TX 78729
(512) 777-4600
TBPELS FIRM #312

Revision No.	Date	Description

STATE OF TEXAS
MELANIE S. CLEAVELIN
108945
LICENSED
PROFESSIONAL ENGINEER
4/5/23

THE SEAL APPEARING ON THIS DOCUMENT WAS AUTHORIZED BY MELANIE S. CLEAVELIN, P.E., 108945 ON 4/5/2023. ALTERATION OF A SEALED DOCUMENT WITHOUT PROPER AUTHORITY TO DO SO IS UNLAWFUL AND CONSTITUTES AN OFFENSE UNDER THE TEXAS ENGINEERING PRACTICE ACT. THE RECORD COPY OF THIS DRAWING IS ON FILE AT THE OFFICES OF HALFF ASSOCIATES, INC., 1201 NORTH BOWSER RD, RICHARDSON, TEXAS, 75081 / TBPE FIRM #F-312.

100% SUBMITTAL

Project No.:	36179.002
Issued:	4/12/2023
Drawn By:	TM
Checked By:	MC
Scale:	1"=40'

Sheet Title
SAM BASS RD
ROADWAY PLAN
(2 OF 6)

101
Sheet Number

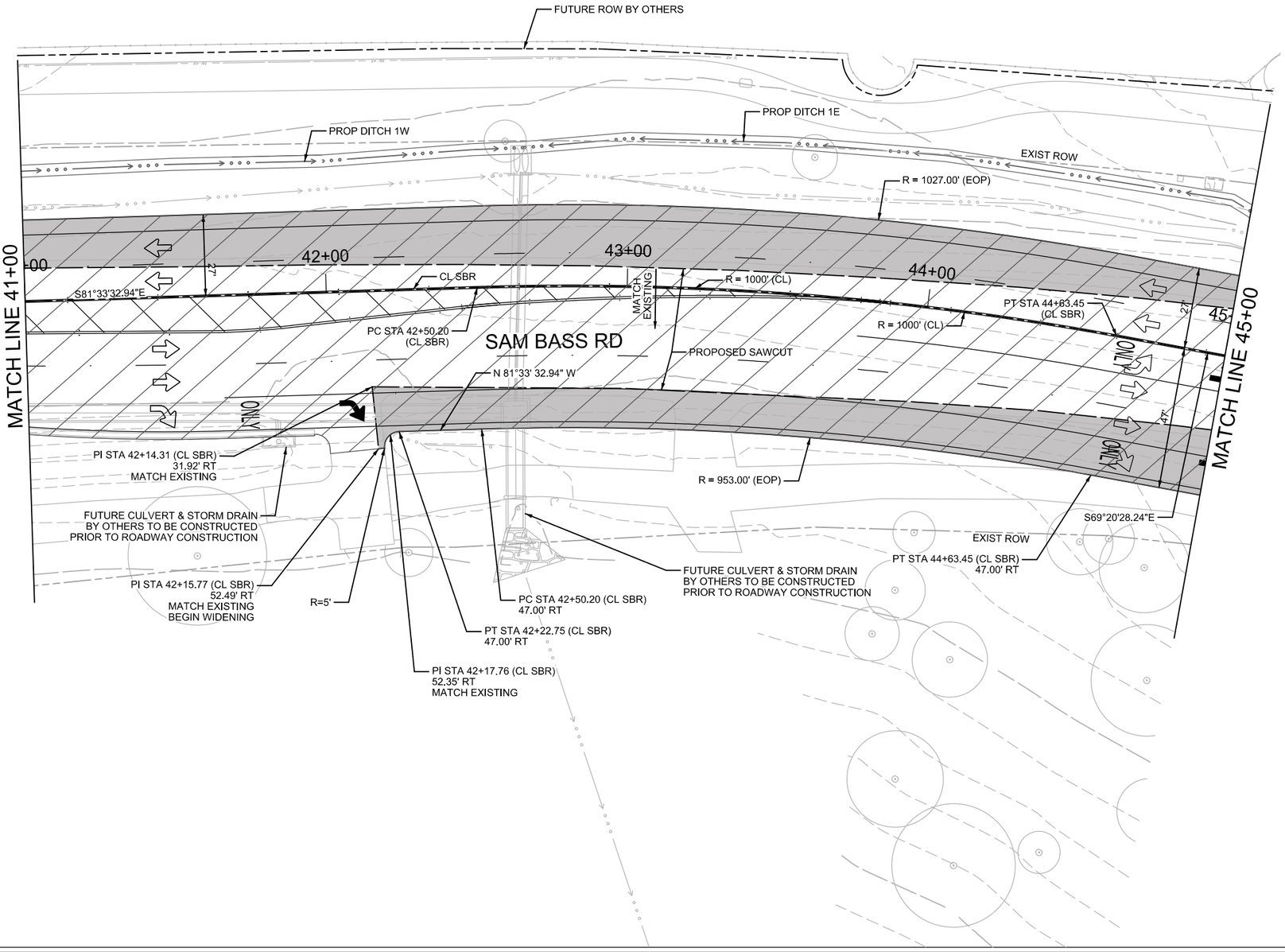

N

0 20 40 60 80

SCALE: 1"=40'

LEGEND

- EXIST. CONTOUR
- EXIST. ROW
- EXIST. PROPERTY LINE
- PROP ROW
- EASEMENT
- PROP STORM PIPE
- 1+00 ROAD CENTERLINE
- EXIST. FENCE
- PROP. CORRIDOR FENCE
- TRAFFIC FLOW
- DOUBLE MAST ILLUMINATION POLE
- TRAFFIC SIGNAL
- CONC MEDIAN
- PROP. DITCH LINE
- EXISTING DITCH LINE
- PROP SAWCUT
- P-4 BORE HOLE LOCATION
- TH-105 TEST HOLE LOCATION
- PROP. PAVEMENT WIDENING
- OVERLAY

NOTES:

1. CALLOUTS ARE MEASURED TO BACK OF CURB OR EDGE OF PAVEMENT UNLESS OTHERWISE NOTED.

2. ALL STA/OFFSET CALLOUTS ARE FROM WYM/TNR/SBR UNLESS OTHERWISE NOTED.

3. SEE SAM BASS DRAINAGE DITCH PLAN SHEETS FOR MORE INFORMATION ON DITCHES.

4. ALL EXISTING M/H & WATER VALVES SHALL BE RAISED TO FINAL GRADE PRIOR TO PAVING PER CORR ITEM NO. 506.

DESIGN SPEED (MPH)	MIN K VALUE (CREST)	MIN K VALUE (SAG)
50	84	96

VERTICAL CURVE GEOMETRY			
VPI STA	CREST/SAG	VC LENGTH	K VALUE
41+50.00	SAG	300	320
44+25.00	CREST	150	150
46+00.00	SAG	200	130

WYOMING SPRINGS
SEGMENT 1
ROUND ROCK, TX

ROUND ROCK TEXAS

halff
13620 BRANTWICK DR
BLDG C, STE 100
AUSTIN, TX 78729
(512) 777-4600
TBPELS FIRM #312

Revision No.	Date	Description
.	.	.

STATE OF TEXAS
MELANIE S. CLEAVELIN
108945
LICENSED PROFESSIONAL ENGINEER
4/5/23
Melanie S Cleavelin

"THIS SEAL APPEARING ON THIS DOCUMENT WAS AUTHORIZED BY MELANIE S. CLEAVELIN, P.E. 108945 ON 4/5/2023. IT IS A VIOLATION OF LAW FOR ANY PERSON, UNLESS ACTING UNDER THE DIRECTION OF THE PROPER NOTIFICATION TO THE RESPONSIBLE ENGINEER IN AN OFFENSE UNDER THE TEXAS ENGINEERING PRACTICE ACT. THE RECORD COPY OF THIS DRAWING IS ON FILE AT THE OFFICES OF HALFF ASSOCIATES, INC., 1201 NORTH BOWSER RD, RICHARDSON, TEXAS, 75081, TBPE FIRM #312."

100% SUBMITTAL

Project No.:	36179.002
Issued:	4/12/2023
Drawn By:	TM
Checked By:	MC
Scale:	1"=40'

Sheet Title
SAM BASS RD
ROADWAY PLAN
(3 OF 6)

102
Sheet Number

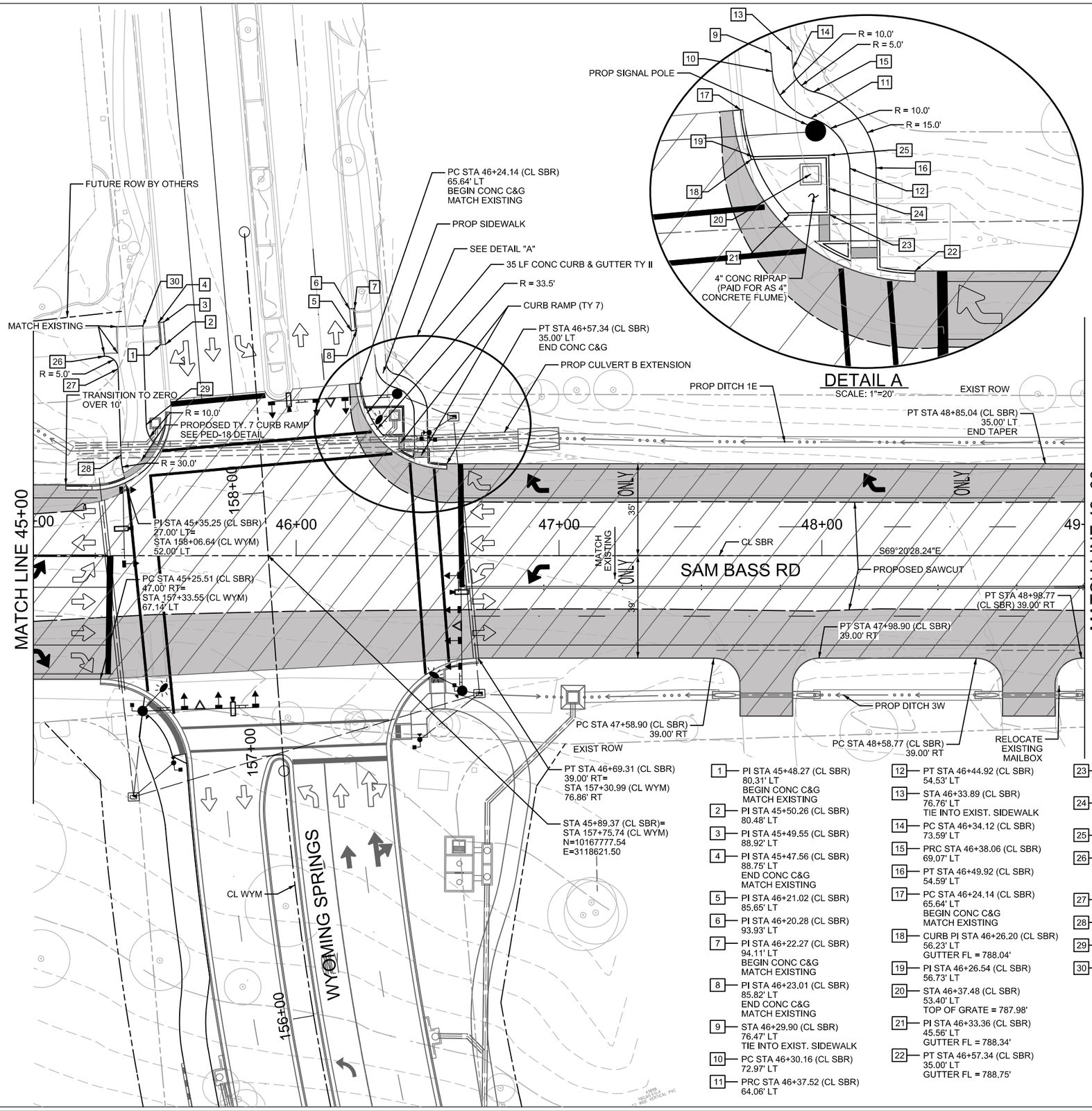

N

0 20 40 60 80

SCALE: 1"=40'

LEGEND

- EXIST. CONTOUR
- EXIST. ROW
- EXIST. PROPERTY LINE
- PROP ROW
- EASEMENT
- PROP STORM PIPE
- 1+00 ROAD CENTERLINE
- EXIST. FENCE
- PROP. CORRIDOR FENCE
- TRAFFIC FLOW
- DOUBLE MAST ILLUMINATION POLE
- TRAFFIC SIGNAL
- CONC MEDIAN
- PROP. DITCH LINE
- EXISTING DITCH LINE
- PROP SAWCUT
- P-4 BORE HOLE LOCATION
- TH-1 TEST HOLE LOCATION
- PROP. PAVEMENT WIDENING
- OVERLAY

1 PI STA 45+48.27 (CL SBR)
80.31' LT
BEGIN CONC C&G
MATCH EXISTING

2 PI STA 45+50.26 (CL SBR)
80.48' LT

3 PI STA 45+49.55 (CL SBR)
88.92' LT

4 PI STA 45+47.56 (CL SBR)
88.75' LT
END CONC C&G
MATCH EXISTING

5 PI STA 46+21.02 (CL SBR)
85.65' LT

6 PI STA 46+20.28 (CL SBR)
93.93' LT

7 PI STA 46+22.27 (CL SBR)
94.11' LT
BEGIN CONC C&G
MATCH EXISTING

8 PI STA 46+23.01 (CL SBR)
85.82' LT
END CONC C&G
MATCH EXISTING

9 STA 46+29.90 (CL SBR)
76.47' LT
TIE INTO EXIST. SIDEWALK

10 PC STA 46+30.16 (CL SBR)
72.97' LT

11 PRC STA 46+37.52 (CL SBR)
64.06' LT

12 PT STA 46+44.92 (CL SBR)
54.53' LT

13 STA 46+33.89 (CL SBR)
76.76' LT
TIE INTO EXIST. SIDEWALK

14 PC STA 46+34.12 (CL SBR)
73.59' LT

15 PRC STA 46+38.06 (CL SBR)
69.07' LT

16 PT STA 46+49.92 (CL SBR)
54.59' LT

17 PC STA 46+24.14 (CL SBR)
65.64' LT
BEGIN CONC C&G
MATCH EXISTING

18 CURB PI STA 46+26.20 (CL SBR)
56.23' LT
GUTTER FL = 788.04'

19 PI STA 46+26.54 (CL SBR)
56.73' LT

20 STA 46+37.48 (CL SBR)
53.40' LT
TOP OF GRATE = 787.98'

21 PI STA 46+33.36 (CL SBR)
45.56' LT
GUTTER FL = 788.34'

22 PT STA 46+57.34 (CL SBR)
35.00' LT
GUTTER FL = 788.75'

23 STA 46+41.14 (CL SBR)
45.66' LT
END TAPER TO ZERO CURB

24 STA 46+41.04 (CL SBR)
50.66' LT
BEGIN TAPER TO ZERO CURB

25 CURB PI STA 46+40.91 (CL SBR)
57.02' LT

26 PC STA 45+27.00 (CL SBR)
75.94' LT
KEEP 12" MIN POUR WIDTH FROM
EXIST. SHARED USE PATH

27 PT STA 45+32.23 (CL SBR)
71.11' LT

28 PC STA 45+33.33 (CL SBR)
38.29' LT

29 PT STA 45+42.95 (CL SBR)
49.89' LT

30 PI STA 45+41.69 (CL SBR)
87.50' LT

NOTES:

1. CALLOUTS ARE MEASURED TO BACK OF CURB OR EDGE OF PAVEMENT UNLESS OTHERWISE NOTED.

2. ALL STA/OFFSET CALLOUTS ARE FROM WYM/TNR/SBR UNLESS OTHERWISE NOTED.

3. SEE SAM BASS DRAINAGE DITCH PLAN SHEETS FOR MORE INFORMATION ON DITCHES.

4. ALL EXISTING M/H & WATER VALVES SHALL BE RAISED TO FINAL GRADE PRIOR TO PAVING PER CORR ITEM NO. 506.

DESIGN SPEED (MPH)	MIN K VALUE (CREST)	MIN K VALUE (SAG)
50	84	96

VERTICAL CURVE GEOMETRY			
VPI STA	CREST/SAG	VC LENGTH	K VALUE
41+50.00	SAG	300	320
44+25.00	CREST	150	150
46+00.00	SAG	200	130

WYOMING SPRINGS
SEGMENT 1
ROUND ROCK, TX

ROUND ROCK TEXAS

halff
13620 BRANTWICK DR
BLDG C, STE 100
AUSTIN, TX 78729
(512) 777-4600
TBPELS FIRM #312

Revision No.	Date	Description

STATE OF TEXAS
MELANIE S. CLEAVELIN
108945
LICENSED
PROFESSIONAL
ENGINEER
4/5/23
Melanie S Cleavelin

THIS SEAL APPEARING ON THIS DOCUMENT WAS AUTHORIZED BY MELANIE S. CLEAVELIN, P.E. ON 4/5/2023. ALTERATION OF A SEALED DOCUMENT WITHOUT PROPER NOTIFICATION TO THE RESPONSIBLE ENGINEER IS AN OFFENSE UNDER THE TEXAS ENGINEERING PRACTICE ACT. THE RECORD COPY OF THIS DRAWING IS ON FILE AT THE OFFICES OF HALFF ASSOCIATES, INC. 1201 N. BOWSER RD, RICHARDSON, TEXAS, 75081 / TBPE FIRM #312.

100% SUBMITTAL

Project No.:	36179.002
Issued:	4/12/2023
Drawn By:	TM
Checked By:	MC
Scale:	1"=40'

Sheet Title
SAM BASS RD
ROADWAY PLAN
(4 OF 6)

103
Sheet Number

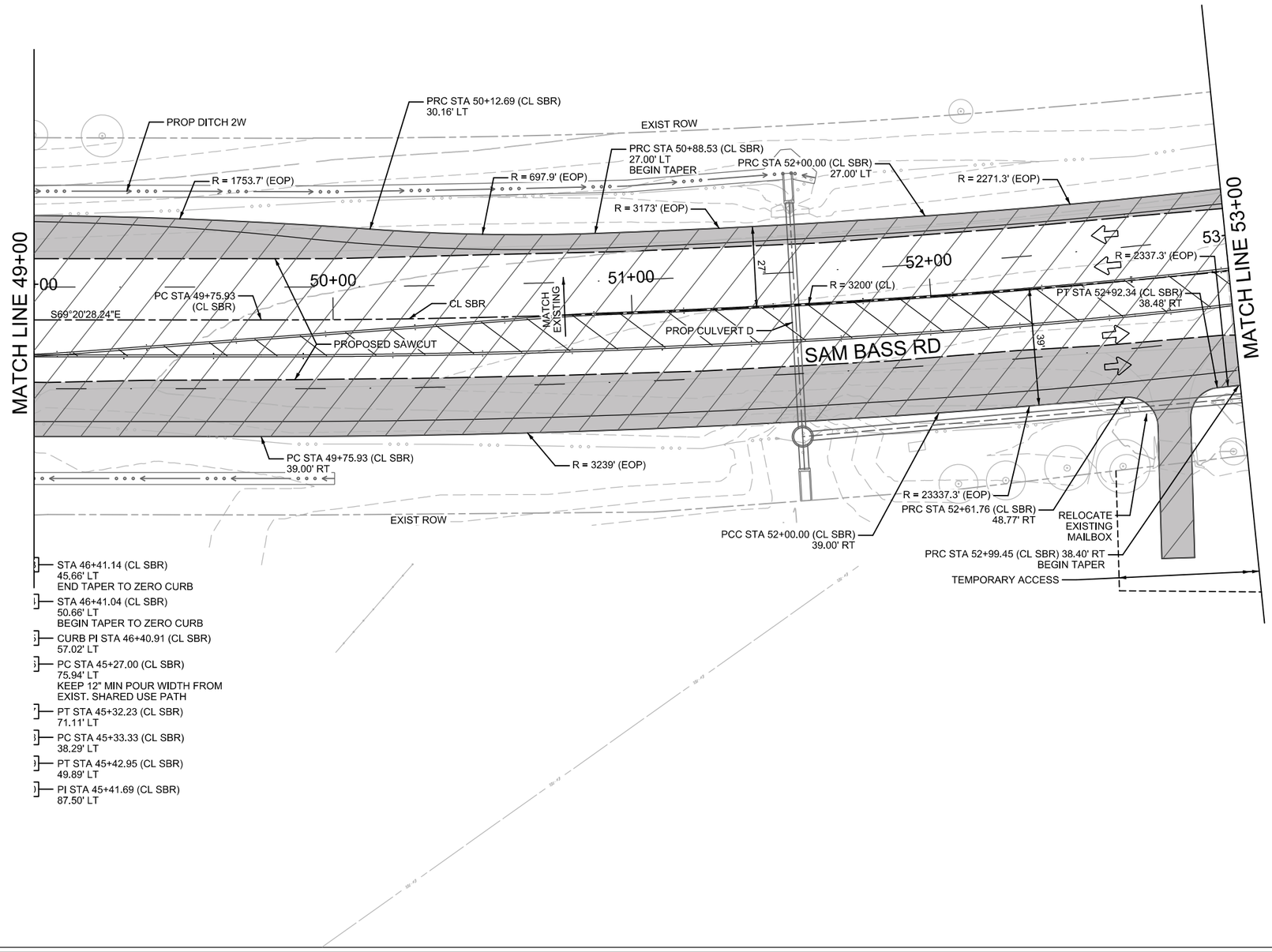

N

0 20 40 60 80

SCALE: 1"=40'

LEGEND

- EXIST. CONTOUR
- EXIST. ROW
- EXIST. PROPERTY LINE
- PROP ROW
- EASEMENT
- PROP STORM PIPE
- 1+00 ROAD CENTERLINE
- EXIST. FENCE
- PROP. CORRIDOR FENCE
- TRAFFIC FLOW
- DOUBLE MAST ILLUMINATION POLE
- TRAFFIC SIGNAL
- CONC MEDIAN
- PROP. DITCH LINE
- EXISTING DITCH LINE
- PROP SAWCUT
- P-4 BORE HOLE LOCATION
- TH-103 TEST HOLE LOCATION
- PROP. PAVEMENT WIDENING
- OVERLAY

NOTES:

1. CALLOUTS ARE MEASURED TO BACK OF CURB OR EDGE OF PAVEMENT UNLESS OTHERWISE NOTED.
2. ALL STA/OFFSET CALLOUTS ARE FROM WYM/TNR/SBR UNLESS OTHERWISE NOTED.
3. SEE SAM BASS DRAINAGE DITCH PLAN SHEETS FOR MORE INFORMATION ON DITCHES.
4. ALL EXISTING M/H & WATER VALVES SHALL BE RAISED TO FINAL GRADE PRIOR TO PAVING PER CORR ITEM NO. 506.

DESIGN SPEED (MPH)	MIN K VALUE (CREST)	MIN K VALUE (SAG)
50	84	96

VERTICAL CURVE GEOMETRY

VPI STA	CREST/SAG	VC LENGTH	K VALUE
41+50.00	SAG	300	320
44+25.00	CREST	150	150
46+00.00	SAG	200	130

WYOMING SPRINGS
SEGMENT 1
ROUND ROCK, TX

ROUND ROCK TEXAS

halff
13620 BRANTWICK DR
BLDG C, STE 100
AUSTIN, TX 78729
(512) 777-4600
TBPELS FIRM #312

Revision No.	Date	Description

STATE OF TEXAS
MELANIE S. CLEAVELIN
108945
LICENSED
PROFESSIONAL ENGINEER
4/5/23

THIS SEAL APPEARING ON THIS DOCUMENT WAS AUTHORIZED BY MELANIE S. CLEAVELIN, P.E. 108945 ON 4/5/2023. ALTERATION OF A SEALED DOCUMENT WITHOUT PROPER AUTHORITY TO DO SO IS UNLAWFUL AND PUNISHABLE AS AN OFFENSE UNDER THE TEXAS ENGINEERING PRACTICE ACT. THE RECORD COPY OF THIS DRAWING IS ON FILE AT THE OFFICES OF HALFF ASSOCIATES, INC., 1201 NORTH BOWSER RD, RICHARDSON, TEXAS, 75081 / TBPE FIRM #F-312.

100% SUBMITTAL

Project No.:	36179.002
Issued:	4/12/2023
Drawn By:	TM
Checked By:	MC
Scale:	1"=40'

Sheet Title
SAM BASS RD
ROADWAY PLAN
(5 OF 6)

104
Sheet Number

LEGEND

- EXIST. CONTOUR
- EXIST. ROW
- EXIST. PROPERTY LINE
- PROP ROW
- EASEMENT
- PROP STORM PIPE
- 1+00 ROAD CENTERLINE
- EXIST. FENCE
- PROP. CORRIDOR FENCE
- TRAFFIC FLOW
- DOUBLE MAST ILLUMINATION POLE
- TRAFFIC SIGNAL
- CONC MEDIAN
- PROP. DITCH LINE
- EXISTING DITCH LINE
- PROP SAWCUT
- P-4 BORE HOLE LOCATION
- TH-05 TEST HOLE LOCATION
- PROP. PAVEMENT WIDENING
- OVERLAY

NOTES:

1. CALLOUTS ARE MEASURED TO BACK OF CURB OR EDGE OF PAVEMENT UNLESS OTHERWISE NOTED.
2. ALL STA/OFFSET CALLOUTS ARE FROM WYM/TNR/SBR UNLESS OTHERWISE NOTED.
3. SEE SAM BASS DRAINAGE DITCH PLAN SHEETS FOR MORE INFORMATION ON DITCHES.
4. ALL EXISTING M/H & WATER VALVES SHALL BE RAISED TO FINAL GRADE PRIOR TO PAVING PER CORR ITEM NO. 506.

N

0 20 40 60 80

SCALE: 1"=40'

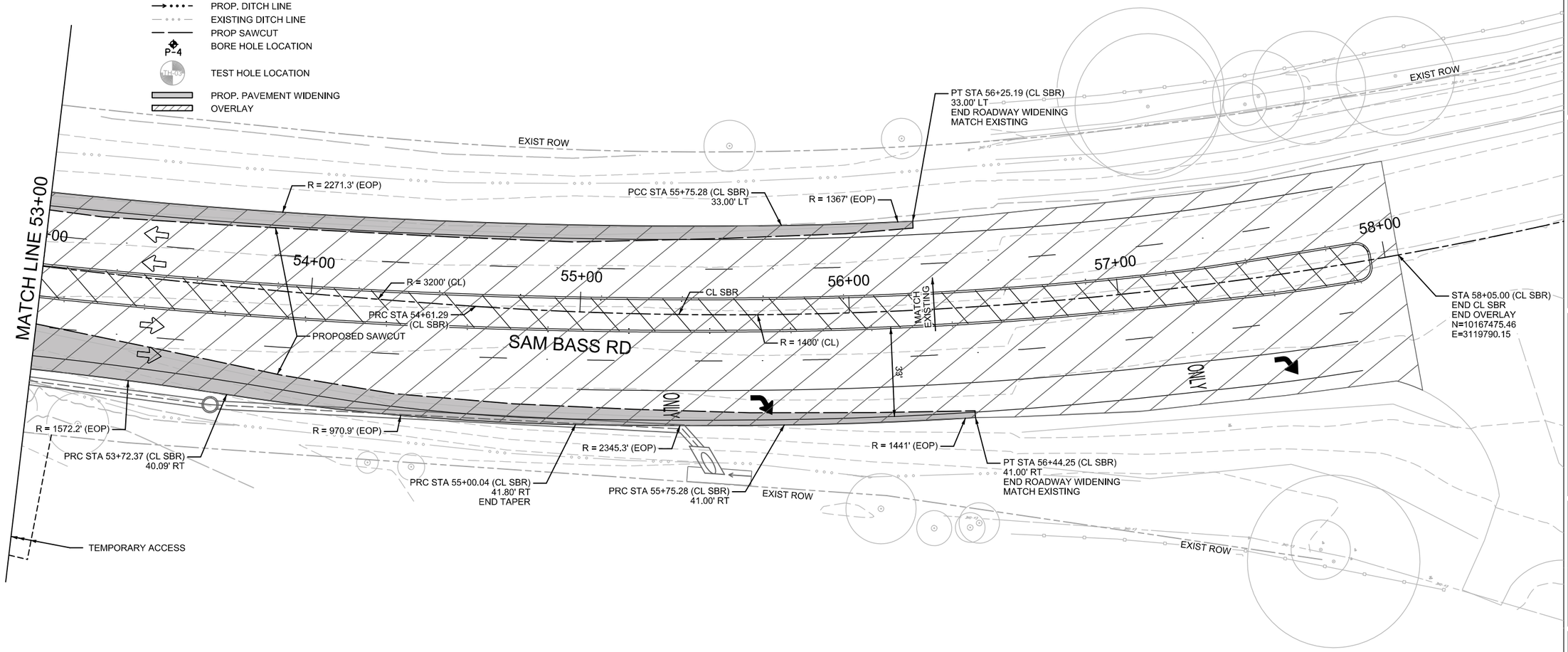

DESIGN SPEED (MPH)	MIN K VALUE (CREST)	MIN K VALUE (SAG)
50	84	96

VERTICAL CURVE GEOMETRY			
VPI STA	CREST/SAG	VC LENGTH	K VALUE
41+50.00	SAG	300	320
44+25.00	CREST	150	150
46+00.00	SAG	200	130

WYOMING SPRINGS
SEGMENT 1
ROUND ROCK, TX

ROUND ROCK TEXAS

halff
13620 BRANTWICK DR
BLDG C, STE 100
AUSTIN, TX 78729
(512) 777-4800
TBPELS FIRM #312

Revision No.	Date	Description

STATE OF TEXAS
MELANIE S. CLEAVELIN
108945
LICENSED PROFESSIONAL ENGINEER
4/5/23

THE SEAL APPEARING ON THIS DOCUMENT WAS AUTHORIZED BY MELANIE S. CLEAVELIN, P.E. 108945 ON 4/5/2023. ALTERATION OF A SEALED DOCUMENT WITHOUT PROPER NOTIFICATION TO THE RESPONSIBLE ENGINEER IS AN OFFENSE UNDER THE TEXAS ENGINEERING PRACTICE ACT. THE RECORD COPY OF THIS DRAWING IS ON FILE IN THE OFFICES OF HALFF ASSOCIATES, INC., 1201 NORTH BOWSER RD, RICHARDSON, TEXAS, 75081 TBPE FIRM #312.

100% SUBMITTAL

Project No.:	36179.002
Issued:	4/12/2023
Drawn By:	TM
Checked By:	MC
Scale:	1"=40'

Sheet Title
SAM BASS RD
ROADWAY PLAN
(6 OF 6)

105
Sheet Number

TCP-01-2-13
MOD-2-13

Date: 4/12/2023
File: 036179.002 SAM BASS RD PLAN.dgn
Time: 4:59:17 PM
User: eric.lizon
Name: HALFF

OMITTED

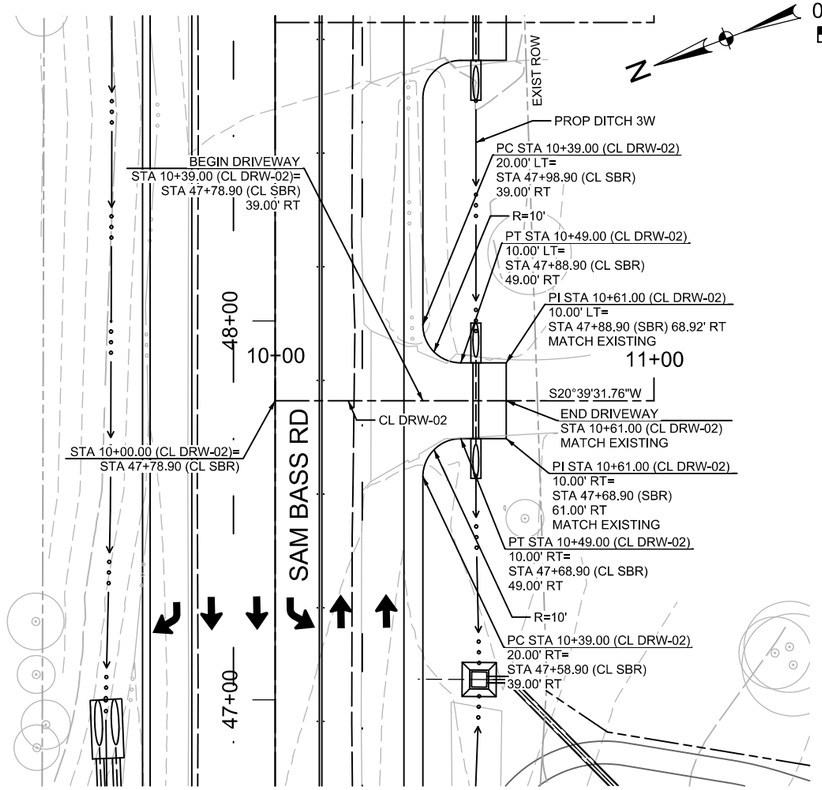

0 20 40 60 80

SCALE: 1"=40'

LEGEND

- EXIST. CONTOUR
- EXIST. ROW
- EXIST. PROPERTY LINE
- PROP ROW
- EASEMENT
- PROP STORM PIPE
- 1+00 ROAD CENTERLINE
- EXIST. FENCE
- PROP. CORRIDOR FENCE
- TRAFFIC FLOW
- DOUBLE MAST ILLUMINATION POLE
- TRAFFIC SIGNAL
- CONC MEDIAN
- PROP. DITCH LINE
- EXISTING DITCH LINE
- PROP SAWCUT
- P-4 BORE HOLE LOCATION
- TH-105 TEST HOLE LOCATION
- PROP. PAVEMENT WIDENING

DRIVEWAY 01

DRIVEWAY 02

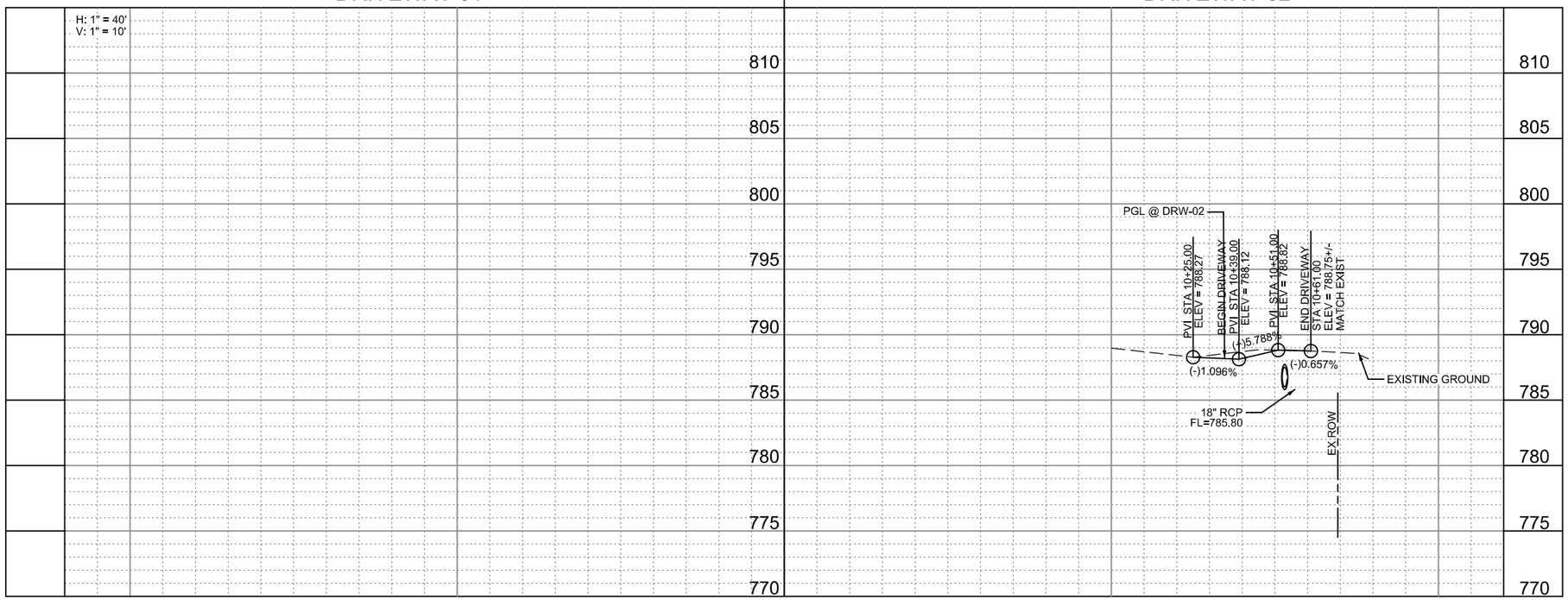

NOTES:

1. CALLOUTS ARE MEASURED TO BACK OF CURB OR EDGE OF PAVEMENT UNLESS OTHERWISE NOTED.

2. ALL STA/OFFSET CALLOUTS ARE FROM WYM/TNR/SBR UNLESS OTHERWISE NOTED.

3. SEE WYOMING SPRINGS DITCH PLAN SHEETS FOR MORE INFORMATION ON DITCHES.

4. ALL EXISTING M/H & WATER VALVES SHALL BE RAISED TO FINAL GRADE PRIOR TO PAVING PER CORR ITEM NO. 506.

WYOMING SPRINGS
SEGMENT 1
ROUND ROCK, TX

ROUND ROCK TEXAS

halff
13620 BRANTWICK DR
BLDG C, STE 100
AUSTIN, TX 78729
(512) 777-4600
TBPELS FIRM #312

Revision No.	Date	Description

STATE OF TEXAS
MELANIE S. CLEAVELIN
108945
LICENSED PROFESSIONAL ENGINEER
4/5/23

"THE SEAL APPEARING ON THIS DOCUMENT WAS AUTHORIZED BY MELANIE S. CLEAVELIN, P.E., 108945 ON 4/5/2023. ALTERATION OF A SEALED DOCUMENT WITHOUT PROPER NOTIFICATION TO THE RESPONSIBLE ENGINEER IS AN OFFENSE UNDER THE TEXAS ENGINEERING PRACTICE ACT. THIS DOCUMENT WAS ORIGINALLY PROCESSED BY HALFF ASSOCIATES, INC., 1201 NORTH BOWSER RD, RICHARDSON, TEXAS, 75081 / TBPE FIRM #F-312."

100% SUBMITTAL

Project No.:	36179.002
Issued:	4/6/2023
Drawn By:	TM
Checked By:	MC
Scale:	1"=40'H, 1"=10'V

Sheet Title
DRIVEWAY
PLAN & PROFILE
(1 OF 2)

106
Sheet Number

DWG
P:\Projects\36000s\36179.002\CAD\Dwgs\BRIDGE\36179.002 DRW01.dgn
HALFF
4/5/2023 3:57:09 PM

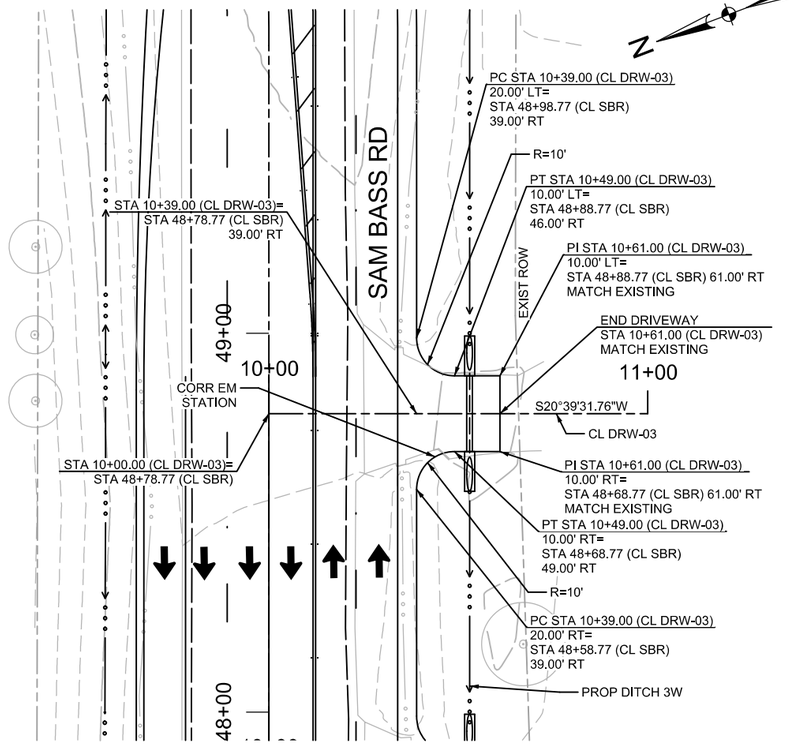

DRIVEWAY 03

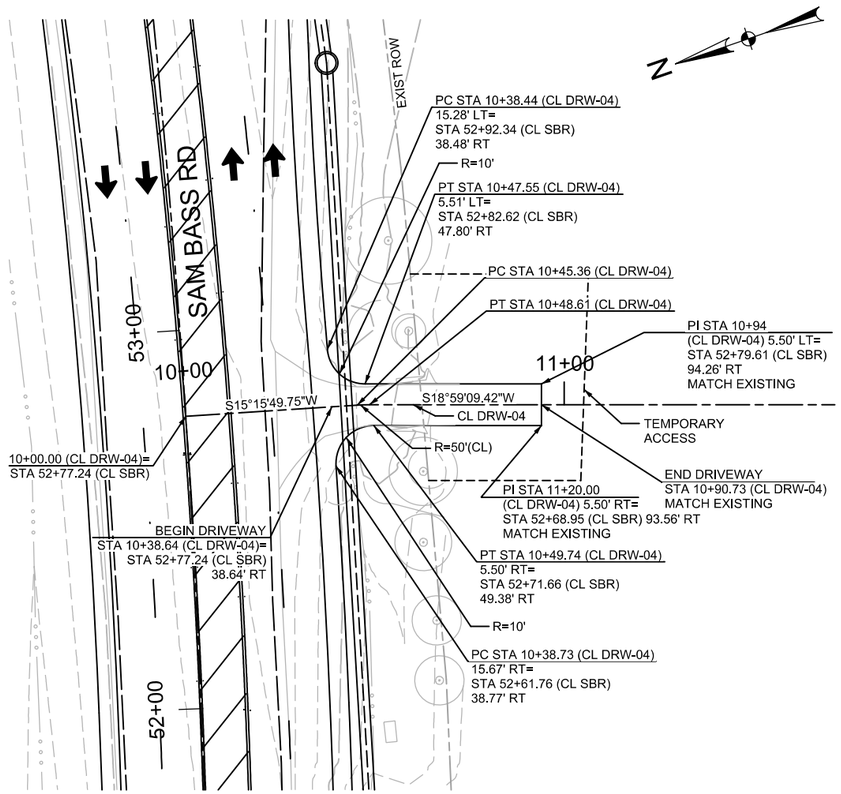

DRIVEWAY 04

0 20 40 60 80

SCALE: 1"=40'

LEGEND

- EXIST. CONTOUR
- EXIST. ROW
- EXIST. PROPERTY LINE
- PROP ROW
- EASEMENT
- PROP STORM PIPE
- 1+00 ROAD CENTERLINE
- EXIST. FENCE
- PROP. CORRIDOR FENCE
- TRAFFIC FLOW
- DOUBLE MAST ILLUMINATION POLE
- TRAFFIC SIGNAL
- CONC MEDIAN
- PROP. DITCH LINE
- EXISTING DITCH LINE
- PROP SAWCUT
- P-4 BORE HOLE LOCATION
- TH-105 TEST HOLE LOCATION
- PROP. PAVEMENT WIDENING

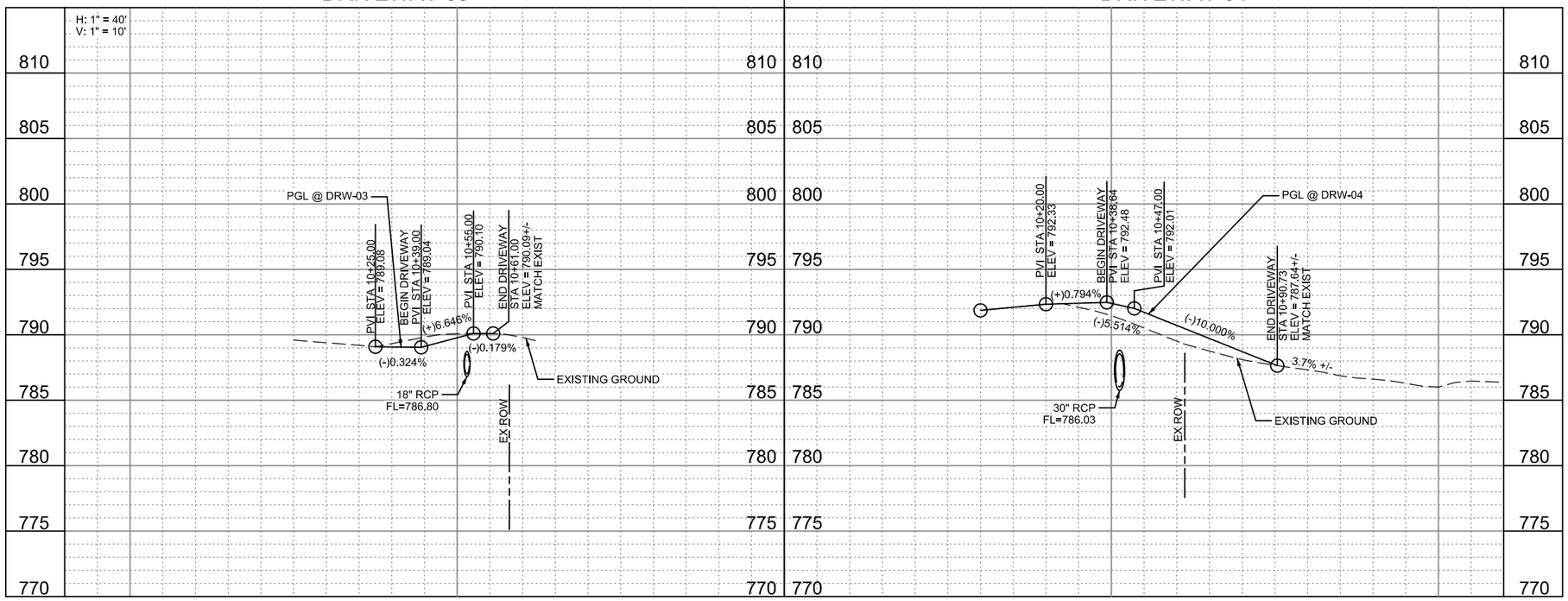

NOTES:

1. CALLOUTS ARE MEASURED TO BACK OF CURB OR EDGE OF PAVEMENT UNLESS OTHERWISE NOTED.
2. ALL STA/OFFSET CALLOUTS ARE FROM WYM/TNR/SBR UNLESS OTHERWISE NOTED.
3. SEE WYOMING SPRINGS DITCH PLAN SHEETS FOR MORE INFORMATION ON DITCHES.
4. ALL EXISTING M/H & WATER VALVES SHALL BE RAISED TO FINAL GRADE PRIOR TO PAVING PER CORR ITEM NO. 506.

WYOMING SPRINGS
SEGMENT 1
ROUND ROCK, TX

ROUND ROCK TEXAS

halff
13620 BRANTWICK DR
BLDG C, STE 100
AUSTIN, TX 78729
(512) 777-4600
TBPELS FIRM #312

Revision No.	Date	Description

STATE OF TEXAS
MELANIE S. CLEAVELIN
108945
LICENSED
PROFESSIONAL ENGINEER
4/5/23

"THE SEAL APPEARING ON THIS DOCUMENT WAS AUTHORIZED BY MELANIE S. CLEAVELIN, P.E. 108945 ON 4/5/2023. ALTERATION OF A SEALED DOCUMENT WITHOUT PROPER NOTIFICATION TO THE RESPONSIBLE ENGINEER IS AN OFFENSE UNDER THE TEXAS ENGINEERING PRACTICE ACT. THIS DOCUMENT WAS ORIGINALLY ISSUED BY HALFF ASSOCIATES, INC., 1201 NORTH BOWSER RD, RICHARDSON, TEXAS, 75081 / TBPE FIRM #312."

100% SUBMITTAL

Project No.:	36179.002
Issued:	4/6/2023
Drawn By:	TM
Checked By:	MC
Scale:	1"=40'H, 1"=10'V

Sheet Title
DRIVEWAY
PLAN & PROFILE
(2 OF 2)

107
Sheet Number

• SEE DRIVEWAY PLAN & PROFILE SHEET.

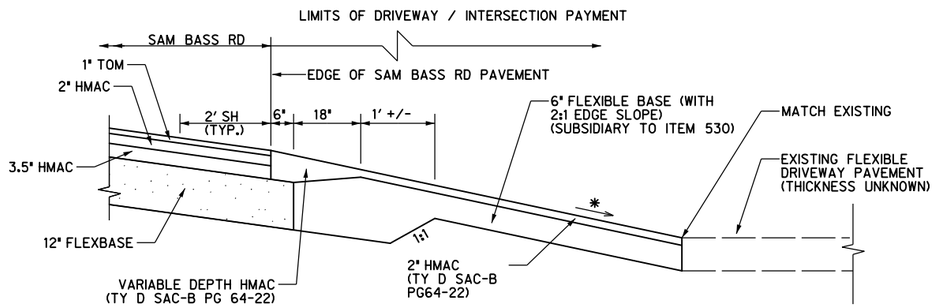

SECTION A-A: FLEXIBLE PAVEMENT DRIVEWAY & INTERSECTION

N.T.S.

DRIVEWAY 4

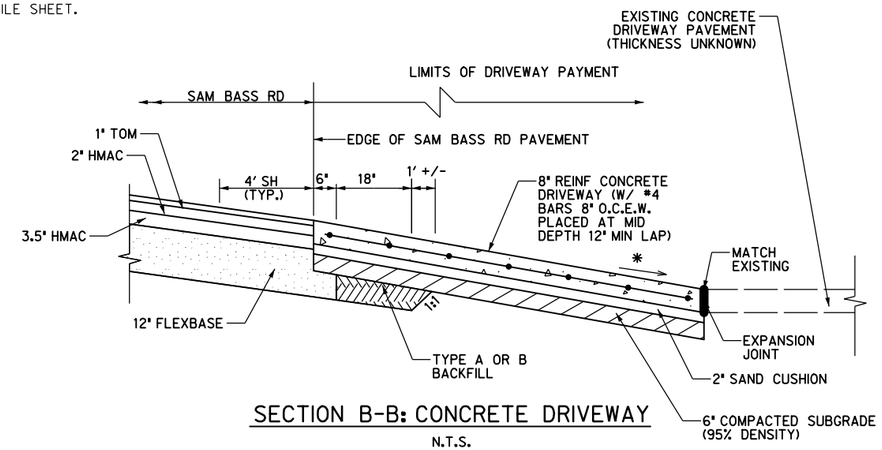

SECTION B-B: CONCRETE DRIVEWAY

N.T.S.

DRIVEWAY 2
DRIVEWAY 3

WYOMING SPRINGS
SEGMENT 1
ROUND ROCK, TX

halff
13620 BRANTWICK DR
BLDG C, STE 100
AUSTIN, TX 78729
(512) 777-4600
TBPELS FIRM #312

Revision No.	Date	Description
.	.	.
.	.	.
.	.	.
.	.	.
.	.	.
.	.	.
.	.	.
.	.	.

STATE OF TEXAS
MELANIE S. CLEAVELIN
108945
LICENSED
PROFESSIONAL ENGINEER
4/5/23

THE SEAL APPEARING ON THIS DOCUMENT WAS AUTHORIZED BY MELANIE S. CLEAVELIN, P.E. ON 4/5/2023. ALTERATION OF A SEALED DOCUMENT WITHOUT PROPER NOTIFICATION TO THE RESPONSIBLE ENGINEER IS AN OFFENSE UNDER THE TEXAS ENGINEERING PRACTICE ACT. THE RECORD COPY OF THIS DRAWING IS ON FILE AT THE OFFICE OF HALFF ASSOCIATES, INC. 1201 N. BOWSER RD, RICHARDSON, TEXAS, 75081. TBPE FIRM #312.

100% SUBMITTAL

Project No.:	36179.002
Issued:	4/6/2023
Drawn By:	TM
Checked By:	MC
Scale:	AS NOTED

Sheet Title

DRIVEWAY DETAILS

108
Sheet Number

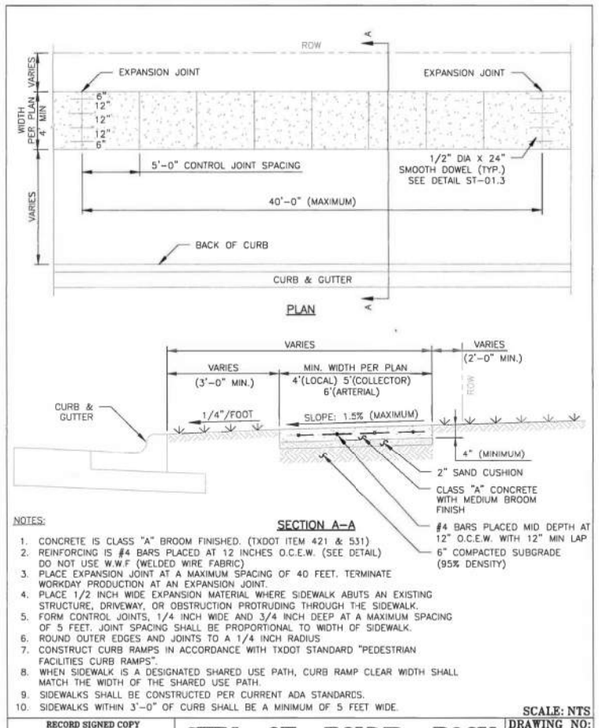

NOTES:

1. CONCRETE IS CLASS "A" BROOM FINISHED. (TXDOT ITEM 421 & 531)
2. REINFORCING IS #4 BARS PLACED AT 12 INCHES O.C.E.W. (SEE DETAIL) DO NOT USE W.W.F (WELDED WIRE FABRIC)
3. PLACE EXPANSION JOINT AT A MAXIMUM SPACING OF 40 FEET. TERMINATE WORKDAY PRODUCTION AT AN EXPANSION JOINT.
4. PLACE 1/2 INCH WIDE EXPANSION MATERIAL WHERE SIDEWALK ABUTS AN EXISTING STRUCTURE, DRIVEWAY, OR OBSTRUCTION PROTRUDING THROUGH THE SIDEWALK.
5. FORM CONTROL JOINTS, 1/4 INCH WIDE AND 3/4 INCH DEEP AT A MAXIMUM SPACING OF 5 FEET. JOINT SPACING SHALL BE PROPORTIONAL TO WIDTH OF SIDEWALK.
6. ROUND OUTER EDGES AND JOINTS TO A 1/4 INCH RADIUS
7. CONSTRUCT CURB RAMPS IN ACCORDANCE WITH TXDOT STANDARD "PEDESTRIAN FACILITIES CURB RAMPS".
8. WHEN SIDEWALK IS A DESIGNATED SHARED USE PATH, CURB RAMP CLEAR WIDTH SHALL MATCH THE WIDTH OF THE SHARED USE PATH.
9. SIDEWALKS SHALL BE CONSTRUCTED PER CURRENT ADA STANDARDS.
10. SIDEWALKS WITHIN 3'-0" OF CURB SHALL BE A MINIMUM OF 5 FEET WIDE.

SCALE: NTS

RECORD SIGNED COPY ON FILE APPROVED 01-28-21 DATE THE ARCHITECT/ENGINEER ASSUMES RESPONSIBILITY FOR THE APPROPRIATE USE OF THIS DETAIL.	CITY OF ROUND ROCK SIDEWALK DETAIL	DRAWING NO: ST-01.1 SHEET 1 of 3

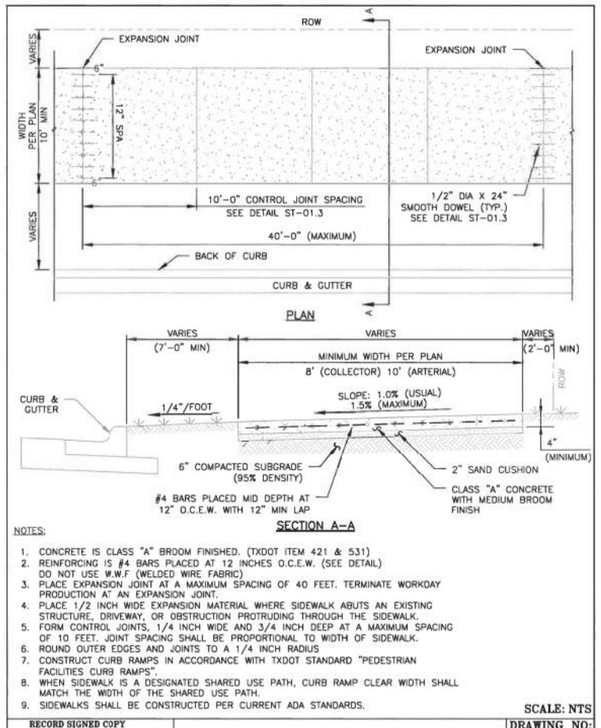

NOTES:

1. CONCRETE IS CLASS "A" BROOM FINISHED. (TXDOT ITEM 421 & 531)
2. REINFORCING IS #4 BARS PLACED AT 12 INCHES O.C.E.W. (SEE DETAIL) DO NOT USE W.W.F (WELDED WIRE FABRIC)
3. PLACE EXPANSION JOINT AT A MAXIMUM SPACING OF 40 FEET. TERMINATE WORKDAY PRODUCTION AT AN EXPANSION JOINT.
4. PLACE 1/2 INCH WIDE EXPANSION MATERIAL WHERE SIDEWALK ABUTS AN EXISTING STRUCTURE, DRIVEWAY, OR OBSTRUCTION PROTRUDING THROUGH THE SIDEWALK.
5. FORM CONTROL JOINTS, 1/4 INCH WIDE AND 3/4 INCH DEEP AT A MAXIMUM SPACING OF 10 FEET. JOINT SPACING SHALL BE PROPORTIONAL TO WIDTH OF SIDEWALK.
6. ROUND OUTER EDGES AND JOINTS TO A 1/4 INCH RADIUS
7. CONSTRUCT CURB RAMPS IN ACCORDANCE WITH TXDOT STANDARD "PEDESTRIAN FACILITIES CURB RAMPS".
8. WHEN SIDEWALK IS A DESIGNATED SHARED USE PATH, CURB RAMP CLEAR WIDTH SHALL MATCH THE WIDTH OF THE SHARED USE PATH.
9. SIDEWALKS SHALL BE CONSTRUCTED PER CURRENT ADA STANDARDS.

SCALE: NTS

RECORD SIGNED COPY ON FILE APPROVED 01-28-21 DATE THE ARCHITECT/ENGINEER ASSUMES RESPONSIBILITY FOR THE APPROPRIATE USE OF THIS DETAIL.	CITY OF ROUND ROCK SHARED USE PATH DETAIL	DRAWING NO: ST-01.2 SHEET 2 of 3

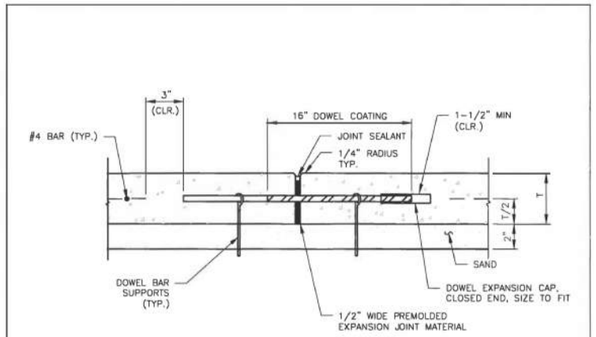

NOTES:

1. SIDEWALKS SHALL BE CONSTRUCTED PER CURRENT ADA STANDARDS.
2. PROPER CHAIRS SHALL BE USED TO SUPPORT THE STEEL REINFORCEMENT.

SCALE: NTS

RECORD SIGNED COPY ON FILE APPROVED 01-28-21 DATE THE ARCHITECT/ENGINEER ASSUMES RESPONSIBILITY FOR THE APPROPRIATE USE OF THIS DETAIL.	CITY OF ROUND ROCK SIDEWALK & SHARED USE PATH DETAIL	DRAWING NO: ST-01.3 SHEET 3 of 3

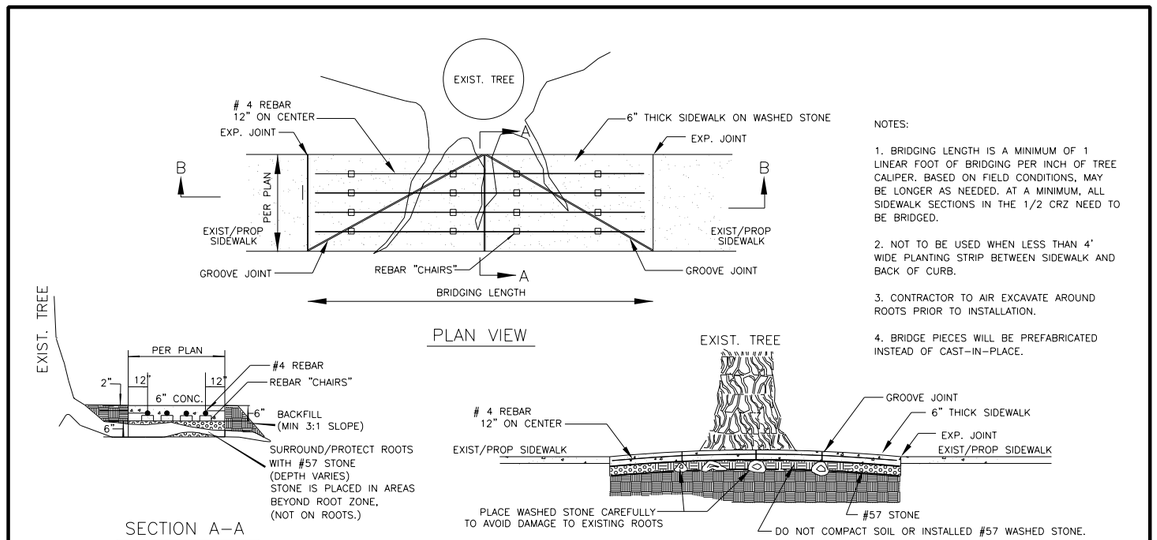

NOTES:

1. BRIDGING LENGTH IS A MINIMUM OF 1 LINEAR FOOT OF BRIDGING PER INCH OF TREE CALIPER. BASED ON FIELD CONDITIONS, MAY BE LONGER AS NEEDED. AT A MINIMUM, ALL SIDEWALK SECTIONS IN THE 1/2 CRZ NEED TO BE BRIDGED.
2. NOT TO BE USED WHEN LESS THAN 4' WIDE PLANTING STRIP BETWEEN SIDEWALK AND BACK OF CURB.
3. CONTRACTOR TO AIR EXCAVATE AROUND ROOTS PRIOR TO INSTALLATION.
4. BRIDGE PIECES WILL BE PREFABRICATED INSTEAD OF CAST-IN-PLACE.

BRIDGING TREE ROOTS DETAILS
(N.T.S)

GRANIT GRAVEL HIKE AND BIKE TRAILS

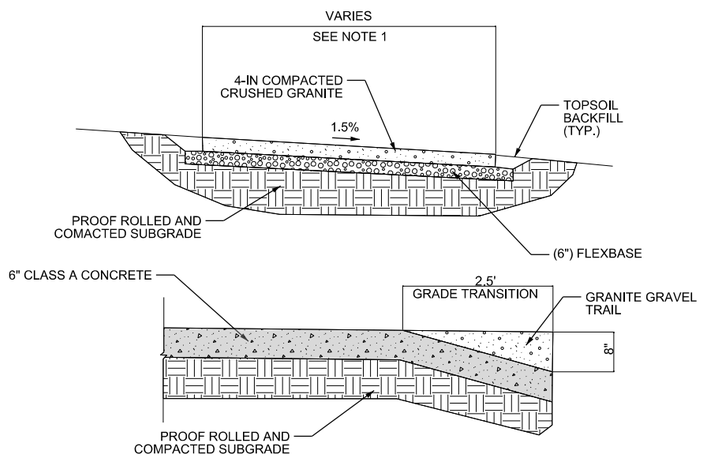

NOTES:

1. ALL WORK SHALL BE PERFORMED IN ACCORDANCE WITH ENGINEERING DRAWINGS.
2. EXISTING TREES, PROPERTY AND PUBLIC RIGHT-OF WAYS SHALL BE PROTECTED FROM DAMAGE BY TRUCKS AND/OR EQUIPMENT.
3. THE GRANITE GRAVEL WEARING COURSE SHALL BE 4" COMPACTED.
4. THE WEARING MATERIAL SHALL BE COMPRISED OF UNWASHED GRANITE AGGREGATE AND FLEXBASE THAT CONFORM TO STARDARD SPECIFICATIONS.
5. UPON COMPLETION OF TRAIL CONSTRUCTION ALL GRANITE GRAVEL SHALL BE REMOVED FROM ADJOINING HARD SURFACESM (I.E. RETAINING CURB/WALL SIDEWALKS.
6. ALL ADJACENT HARD SURFACES, SUCH AS CURBS OR WALKS, SHALL BE INSTALLED PRIOR TO INSTALLATION OF GRANITE GRAVEL.

WYOMING SPRINGS
SEGMENT 1
ROUND ROCK, TX

ROUND ROCK TEXAS

halff
13620 BRANTWICK DR
BLDG C, STE 100
AUSTIN, TX 78729
(512) 777-4600
TBPELS FIRM #312

No.	Date	Revision Description

F-312 4/5/23
STATE OF TEXAS
JEFFREY L. NAGY
133255
LICENSED
PROFESSIONAL ENGINEER

100% SUBMITTAL

Project No.:	36179.002
Issued:	4/28/2023
Drawn By:	SG
Checked By:	JN
Scale:	N.T.S

Sheet Title
ROADWAY STANDARD DETAILS

109
Sheet Number

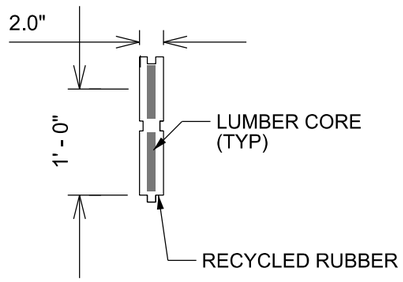

TYPICAL WALL PANEL

(NTS)

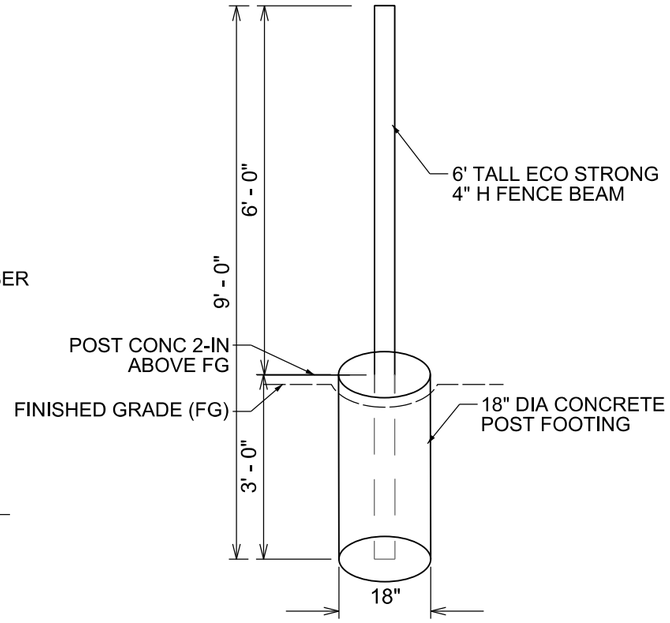

FENCE POST DETAIL
6-FT HIGH FENCE

(NTS)

GENERAL NOTES:

1. THE DIMENSIONS SHOWN ARE IN FEET AND INCHES UNLESS NOTED OTHERWISE.
2. FENCE TO BE ECO-STRONG PRODUCT OR APPROVED EQUAL.
3. COLOR OF PANELS SHALL BE SELECTED AS "SANDSTONE" PER ECO-FLEX MANUFACTURER SPECIFICATIONS.

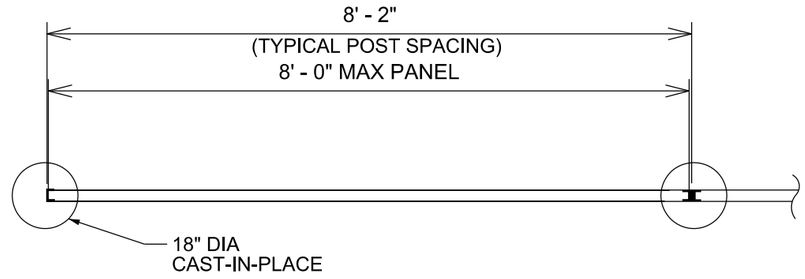

WALL PLAN

(NTS)

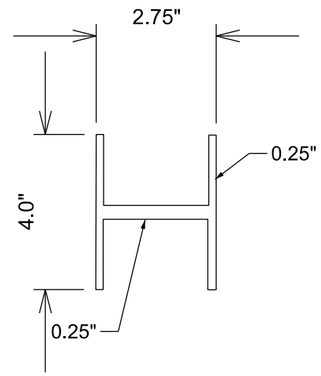

SECTION 4" H BEAM

(NTS)

NOTES:

1. DIMENSIONS ARE APPROXIMATE. FINAL H BEAM TO BE PER MANUFACTURER SHOP DRAWING SUBMITTAL TO FIT TO PANELS. END CAPS TO BE C CHANNELS. BEAMS TO BE COATED TO MATCH COLOR AND AESTHETIC OF PANELS.

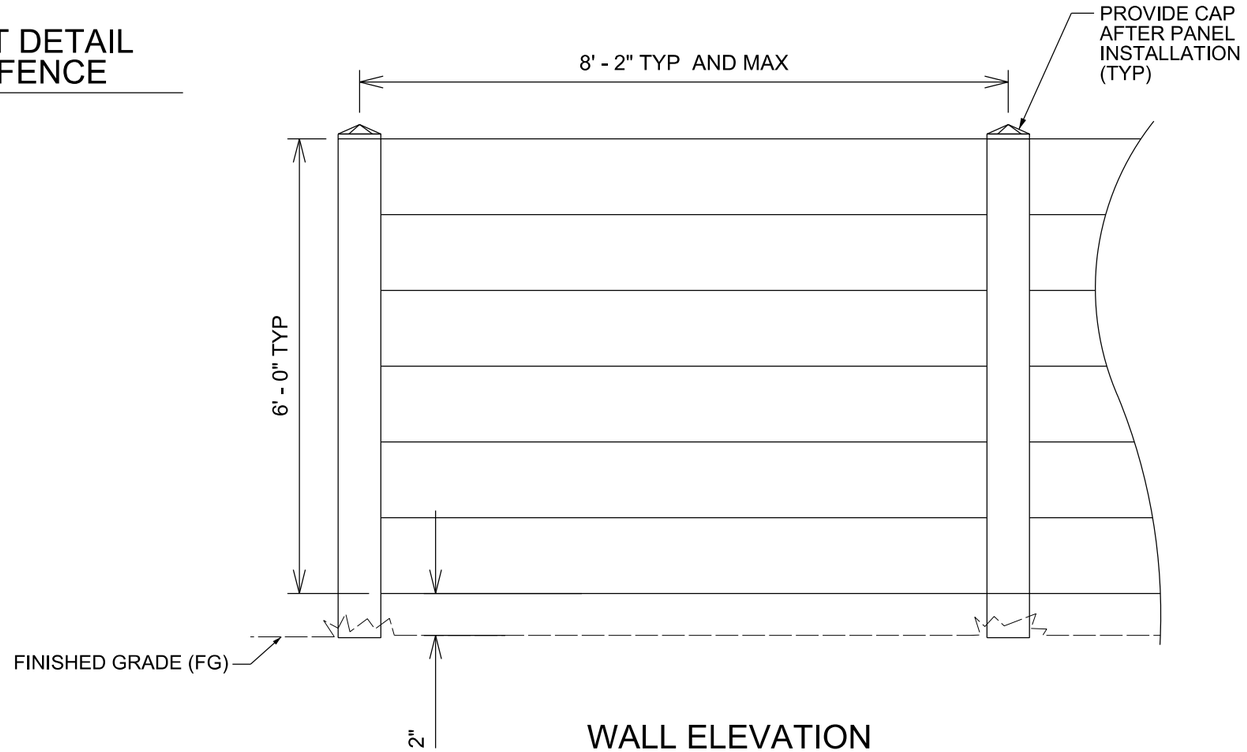

WALL ELEVATION

SCALE - 1:20

WYOMING SPRINGS
SEGMENT 1
ROUND ROCK, TX

ROUND ROCK
TEXAS

halff
13620 BRANTWICK DR
BLDG C, STE 100
AUSTIN, TX 78729
(512) 777-4600
TBPELS FIRM #312

Revision No.	Date	Description

F-312 4/5/23
STATE OF TEXAS
JEFFREY L NAGY
133255
LICENSED
PROFESSIONAL ENGINEER

100% SUBMITTAL

Project No.:	36179.002
Issued:	4/17/2023
Drawn By:	SG
Checked By:	JN
Scale:	N.T.S

Sheet Title
CORRIDOR FENCE DETAIL

110
Sheet Number

DISCLAIMER:
The use of this standard is governed by the "Texas Engineering Practice Act". No warranty of any kind is made by TxDOT for any purpose whatsoever. TxDOT assumes no responsibility for the conversion of this standard to other formats or for incorrect results or damages resulting from its use.

DATE:
FILE:

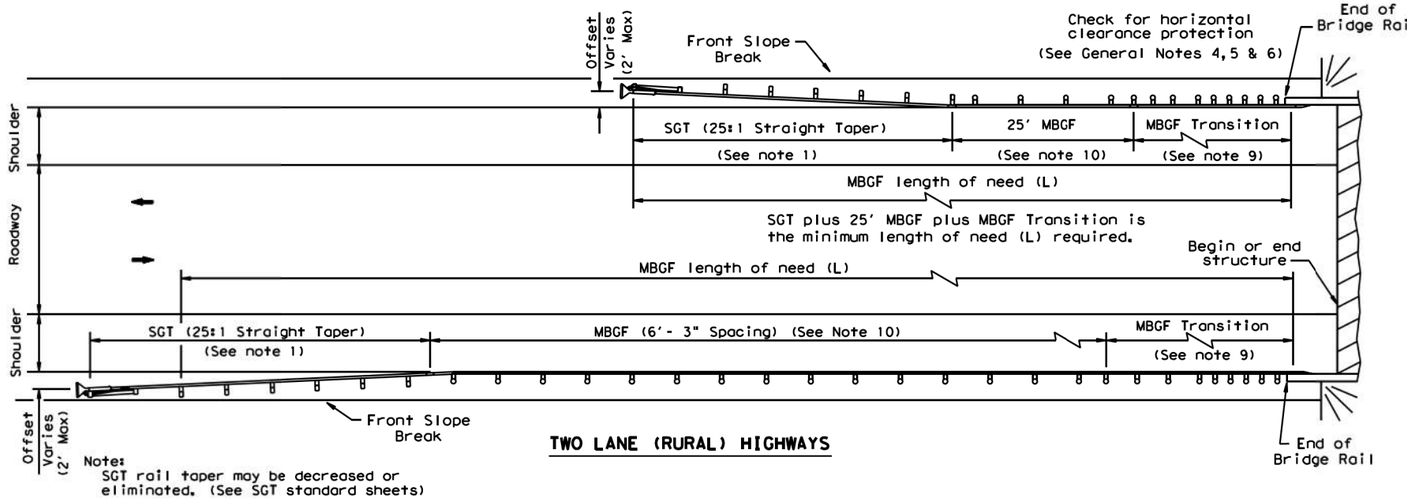

TWO LANE (RURAL) HIGHWAYS

Note:
SGT rail taper may be decreased or eliminated. (See SGT standard sheets)

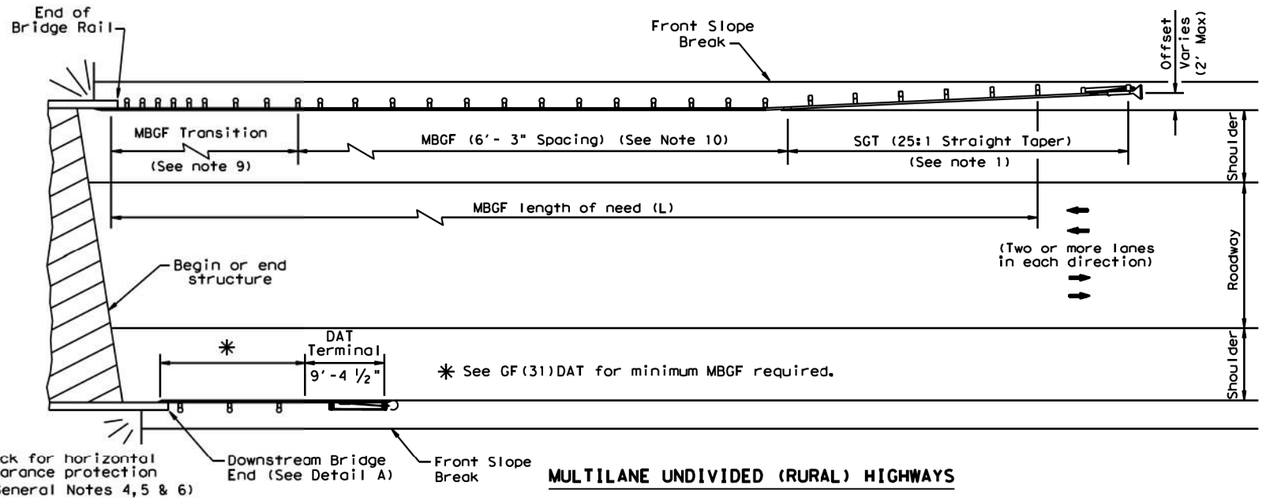

MULTILANE UNDIVIDED (RURAL) HIGHWAYS

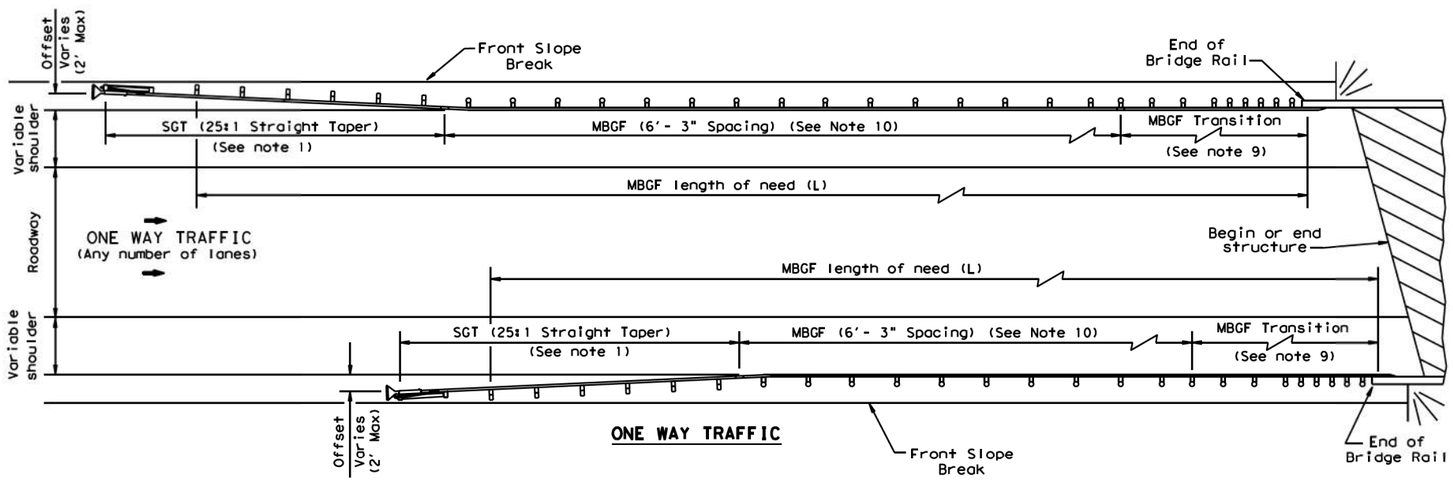

ONE WAY TRAFFIC

GENERAL NOTES

1. For more detail: See GF(31), SGT( )31, GF(31)TR, and GF(31)TL2 standard sheets.
2. Quantities of metal beam guard fence (MBGF) at individual bridge ends are as shown in the plans.
3. Use average daily traffic (ADT) for the current year to determine MBGF length of need in accordance with the Roadway Design Manual unless otherwise specified. Where significant traffic volume growth is anticipated on low volume (0-750 ADT) highways, use length determinations for the higher volume category.
4. MBGF may not be required to shield departure end of bridge unless other obstacles within the horizontal clearance limits or opposing traffic indicate a MBGF consideration.
5. Downstream anchor terminals (DAT) are only for downstream end anchorage use, outside the horizontal clearance area of opposing traffic.
6. Direct connection of MBGF to concrete rails are only for downstream rail connections outside the horizontal clearance area of opposing traffic. (This requires a minimum of three standard line posts plus the DAT terminal, See Detail A)
7. The crown shall be widened to accommodate MBGF. Typically the "front slope" break should be 2'- 0" from the back of the MBGF post. This applies to new construction on new alignment or where existing roadway cross section is to be widened to increase roadway width. This does not apply to rehabilitation work where existing roadway crown width is to be retained (See Typical Cross Section at MBGF).
8. For restrictive bridge widths: The MBGF should be properly transitioned from the existing bridge rail to the adjoining MBGF (See MBGF Transition Standards). Metal beam guard fence at these bridge location(s) shall be flared at the rate of 25:1 or flatter, and be of the length necessary to locate the terminal end at the 2 ft. "maximum" offset from the shoulder edge in the approach direction.
9. Transition length and post spacing will vary depending on the transition type. Transition type will be shown elsewhere in the plans.
10. A minimum 25' length of MBGF will be required.

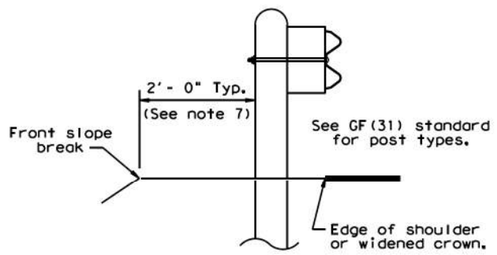

TYPICAL CROSS SECTION AT MBGF

Note:
All rail elements shall be lapped in the direction of adjacent traffic.

DETAIL A

Showing Downstream Rail Attachment

Texas Department of Transportation | Design Division Standard

BRIDGE END DETAILS

(METAL BEAM GUARD FENCE APPLICATIONS TO RIGID RAILS)

BED-14

FILE: bed14.dgn	DN: TxDOT	CK: AM	DW: BD/VP	CK: CGL	
© TxDOT: December 2011	CONT	SECT	JOB	HIGHWAY	
REVISIONS REVISED APRIL 2014 SEE (MEMO 0414)	DIST	COUNTY		SHEET NO.	
				111	

DISCLAIMER:
THE USE OF THIS STANDARD IS GOVERNED BY THE "TEXAS ENGINEERING PRACTICE ACT". NO WARRANTY OF ANY KIND IS MADE BY TXDOT FOR ANY PURPOSE WHATSOEVER. TXDOT ASSUMES NO RESPONSIBILITY FOR THE CONVERSION OF THIS STANDARD TO OTHER FORMATS OR FOR INCORRECT RESULTS OR DAMAGES RESULTING FROM ITS USE.

DATE:
FILE:

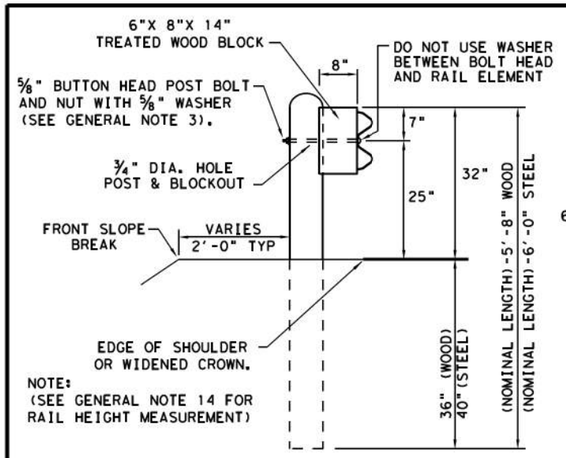

TYPICAL POST PLACEMENT

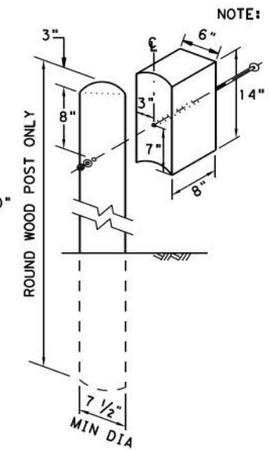

WOOD BLOCK TO ROUND WOOD POST

NOTE: TOENAIL WITH ONE 16D GALV. NAIL TO PREVENT BLOCK ROTATION.

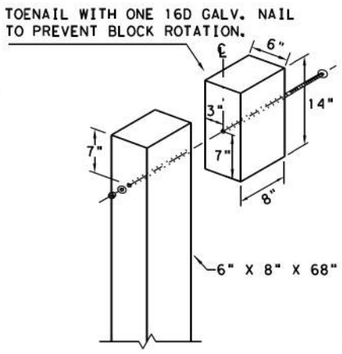

WOOD BLOCK TO RECTANGULAR WOOD POST

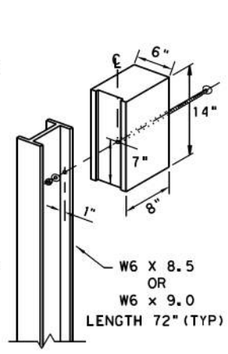

ROUTED WOOD BLOCK TO I-BEAM STEEL POST

NOTE: ** "WOOD" INDICATES DIMENSIONS FOR BOTH ROUND AND RECTANGULAR WOOD POST SYSTEMS.

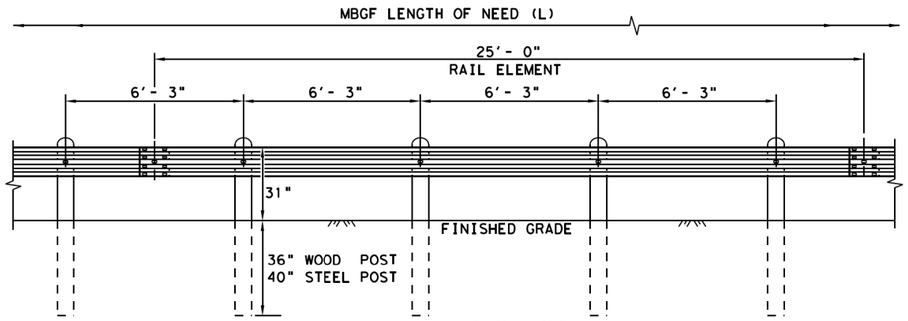

DIRECTION OF TRAFFIC

ELEVATION MID-SPAN RAIL SPLICE

SHOWING A 25'- 0" SECTION OF W-BEAM RAIL. (SEE GENERAL NOTE 2)

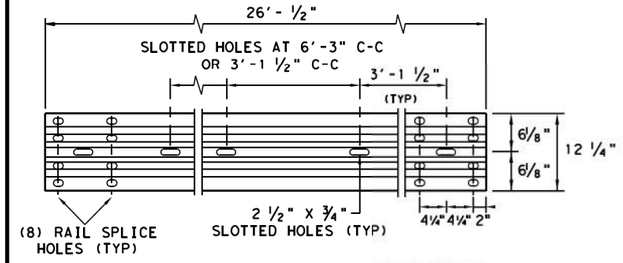

ELEVATION 25'- 0" (NOM.) W-BEAM SECTION

NOTES: SEE GENERAL NOTE 2 FOR ALLOWABLE RAIL TYPES.
SEE RAIL SPLICE DETAIL FOR REQUIRED HARDWARE.

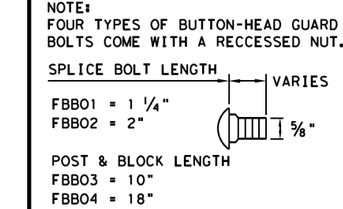

BUTTON HEAD BOLT

NOTE: SEE GENERAL NOTE 3 FOR SPLICE & POST BOLT DETAILS.

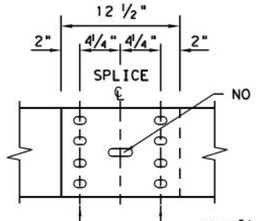

DIRECTION OF TRAFFIC

MID-SPAN RAIL SPLICE DETAIL

NOTE: GF(31), MID-SPAN RAIL SPLICES ARE REQUIRED WITH 6'-3" POST SPACINGS.

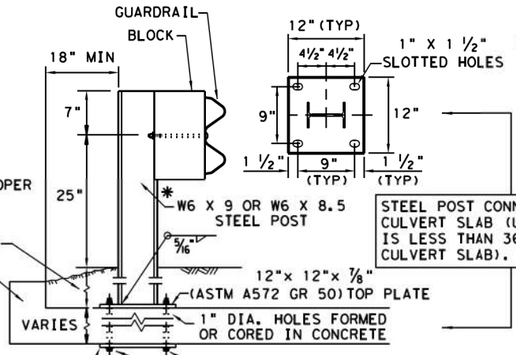

*POST(S) MAY REQUIRE FIELD MODIFICATION TO ENSURE PROPER GUARDRAIL HEIGHT.

STEEL POST CONNECTION TO CULVERT SLAB (USE WHEN THERE IS LESS THAN 36" COVER OVER CULVERT SLAB).

12" X 12" X ¼" (ASTM A36) STEEL BOTTOM PLATE WITH 1" DIA. HOLES REQUIRED WITH BOLT-THROUGH INSTALLATION.

LOW FILL CULVERT POST

NOTE: TWO INSTALLATION OPTIONS.

1. BOLT-THROUGH OPTION: REQUIRES A 6" MIN. SLAB THICKNESS. ⅞" DIA (ASTM A449) HEAVY HEX BOLTS WITH TWO HARDENED WASHER EACH AND HEAVY HEX NUTS.
   NOTE: BOLT LENGTH = SLAB PLUS 2 ¼" MIN.

2. EPOXY ANCHOR OPTION: THIS OPTION MAY ONLY BE USED IF THE CULVERT SLAB IS 9" MIN. THICK. THREADED ANCHOR RODS MUST BE ⅞" DIA. ASTM A449 OR A193 GRADE B7 WITH HEAVY HEX NUT, AND ONE HARDENED WASHER EACH. EMBED ANCHOR RODS 6" WITH HILTI HIT RE 500 EPOXY ADHESIVE. OTHER TYPE III CLASS C EPOXY ADHESIVES MEETING THE REQUIREMENTS OF DMS-6100, "EPOXIES AND ADHESIVES", MAY BE USED IF IT CAN BE DEMONSTRATED THAT THEY MEET OR EXCEED THE STRENGTH OF HILTI HIT RE 500 WITH THE SAME EMBEDMENT DEPTH AND THREADED ROD DIA. FOLLOW THE MANUFACTURER'S REQUIREMENTS FOR INSTALLING EPOXIED THREADED RODS. EXTEND RODS ¼" MIN. BEYOND NUT.

NOTE: CULVERTS OF 25 FT. OR LESS, SEE GF(31)LS STANDARD FOR "LONG SPAN" OPTION.

NOTE: TRANSISTIONS TO BRIDGE RAILS OR TRAFFIC BARRIERS.
SEE GF(31)TL3 TR STANDARD FOR HIGH-SPEED TL-3 TRANSITIONS.
SEE GF(31)TL2 TR STANDARD FOR LOW-SPEED TL-2 TRANSITIONS.

GENERAL NOTES

1. THE TYPE OF POST (ROUND WOOD POST, RECTANGULAR WOOD POST, OR STEEL POST) WILL BE AS SHOWN IN THE PLANS. THE EXACT POSITION OF MBGF SHALL BE SHOWN IN THE PLANS OR AS DIRECTED BY THE ENGINEER. STEEL POSTS TO BE GALVANIZED IN ACCORDANCE WITH ITEM 445, "GALVANIZING."
2. RAIL ELEMENTS SHALL MEET THE REQUIREMENTS OF ITEM 540, "METAL BEAM GUARD FENCE" EXCEPT AS MODIFIED IN THE PLANS. THE CONTRACTOR MAY FURNISH RAIL ELEMENTS OF 25'- 0", OR 12'- 6" (NOM.) LENGTHS. RAIL ELEMENTS MAY HAVE SLOTTED HOLES AT 3'-1 ½" C-C OR 6'-3" C-C. A SPECIAL LENGTH OF RAIL MAY BE MANUFACTURED TO ACCOMMODATE THE DOWNSTREAM ANCHOR TERMINAL (DAT) AND THE TRANSITION SECTIONS OF GUARDRAIL.
3. BUTTON HEAD "POST BOLTS & NUTS" SHALL MEET THE REQUIREMENTS OF (ASTM A307), AND SHALL BE OF SUFFICIENT LENGTH TO EXTEND THROUGH THE FULL THICKNESS OF THE NUT AND ⅝" WASHER (FWC16a) AND NOT MORE THAN 1" BEYOND IT. TRIM REMAINING BOLT LENGTH TO MEET REQUIRED LENGTH.
4. FITTINGS (BOLTS, NUTS, AND WASHERS) SHALL BE GALVANIZED IN ACCORDANCE WITH ITEM 445, "GALVANIZING." FITTINGS SHALL BE SUBSIDIARY TO THE BID ITEM.
5. CROWN SHALL BE WIDENED TO ACCOMMODATE THE METAL BEAM GUARD FENCE.
6. THE LATERAL APPROACH TO THE GUARD FENCE, SHALL HAVE A MAXIMUM SLOPE OF 1V:10H.
7. IF SHOWN ELSEWHERE IN THE PLANS OR AS DIRECTED BY THE ENGINEER, THE GUARD FENCE MAY BE FLARED AT A RATE OF 25:1 OR FLATTER.
8. UNLESS OTHERWISE SHOWN IN THE PLANS, GUARD FENCE PLACED IN THE VICINITY OF CURBS SHALL BE POSITIONED SO THAT THE FACE OF CURB IS LOCATED DIRECTLY BELOW OR BEHIND THE FACE OF THE RAIL. RAIL PLACED OVER CURBS SHALL BE INSTALLED SO THAT THE POST BOLT IS LOCATED APPROXIMATELY 25 INCHES ABOVE THE GUTTER PAN OR EDGE OF SHOULDER.
9. APPLICATIONS IN SOLID ROCK ARE ONLY ALLOWED WITH STEEL POSTS. IF SOLID ROCK IS ENCOUNTERED WITHIN 0 TO 18" OF THE FINISHED GRADE, DRILL A 24" DIA. HOLE, 24" INTO THE ROCK. IF SOLID ROCK IS ENCOUNTERED BELOW 18", DRILL A 12" DIA. HOLE, 12" INTO THE ROCK OR TO THE STANDARD EMBEDMENT DEPTH, WHICHEVER MAYBE LESS. ANY EXCESS POST LENGTH, AFTER MEETING THESE DEPTHS, MAY BE FIELD CUT TO ENSURE PROPER GUARDRAIL MOUNTING HEIGHT. BACKFILL WITH COARSE AGGREGATE MATERIAL.
10. POSTS SHALL NOT BE SET IN CONCRETE, OF ANY DEPTH.
11. SPECIAL FABRICATION WILL BE REQUIRED AT INSTALLATION LOCATIONS HAVING A CURVATURE OF LESS THAN 150 FT. RADIUS.
12. UNLESS OTHERWISE SHOWN IN THE PLANS, A COMPOSITE MATERIAL BLOCK THAT MEETS THE REQUIREMENTS OF DMS-7210, "COMPOSITE MATERIAL POSTS AND BLOCKS FOR METAL BEAM GUARD FENCE" MAY BE SUBSTITUTED FOR BLOCKS OF SIMILAR DIMENSIONS. THE CONSTRUCTION DIVISION, TXDOT MAINTAINS A MATERIAL PRODUCER LIST (MPL) FOR PRODUCERS OF MATERIALS CONFORMING TO DMS-7210 ONLY PRODUCERS ON THE MPL MAY FURNISH COMPOSITE MATERIAL BLOCKS.
13. FOR THE LOW FILL CULVERT OPTION, POSTS LOCATED PARTIALLY OR WHOLLY BETWEEN PRECAST BOX CULVERT UNITS, THE USE OF A CAST-IN-PLACE CONCRETE CLOSURE BETWEEN BOXES IS REQUIRED. THE LENGTH OF THE CAST-IN-PLACE CONCRETE CLOSURE SHALL ACCOMMODATE THE PLACEMENT OF THE LOW FILL CULVERT OPTION. SEE CONCRETE CLOSURE DETAILS ON BRIDGE STANDARD SCP-MD.
14. GUARDRAIL HEIGHT MEASUREMENT: WHEN THE GUARDRAIL IS LOCATED ABOVE PAVEMENT, MEASURE THE HEIGHT FROM THE PAVEMENT TO THE TOP OF THE W-BEAM RAIL. WHEN THE GUARDRAIL IS LOCATED UP TO 2 FT. OFF OF THE EDGE OF PAVEMENT OR FOR A PAVEMENT OVERLAY, USE A 10-FOOT STRAIGHTEDGE TO EXTEND THE PAVEMENT/SHOULDER SLOPE TO THE BACK OF RAIL, MEASURE FROM THE BOTTOM OF STRAIGHTEDGE TO THE TOP OF RAIL. FOR GUARDRAIL LOCATED DOWN A 10:1 SLOPE, MEASURE FROM THE NOMINAL TERRAIN.

Texas Department of Transportation

Design Division Standard

METAL BEAM GUARD FENCE TL-3 MASH COMPLIANT

GF(31)-19

FILE: gf3119.dgn	DN: TxDOT	CK: KM	DW: VP	CK: CGL/AG
©TxDOT: NOVEMBER 2019	CONT	SECT	JOB	HIGHWAY
REVISIONS				
	DIST	COUNTY		SHEET NO.
				112

DISCLAIMER:
THE USE OF THIS STANDARD IS GOVERNED BY THE "TEXAS ENGINEERING PRACTICE ACT". NO WARRANTY OF ANY KIND IS MADE BY TXDOT FOR ANY PURPOSE WHATSOEVER. TXDOT ASSUMES NO RESPONSIBILITY FOR THE CONVERSION OF THIS STANDARD TO OTHER FORMATS OR FOR INCORRECT RESULTS OR DAMAGES RESULTING FROM ITS USE.

DATE:
FILE:

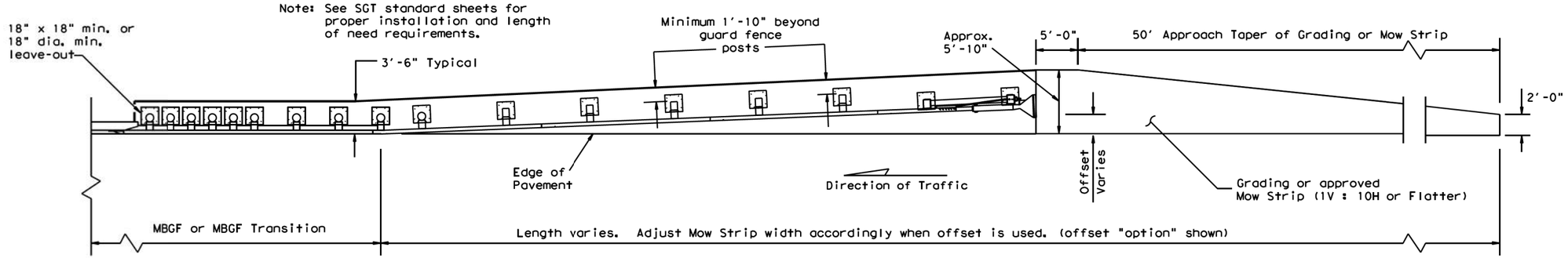

GRADING AND MOW STRIP AT GUARDRAIL END TREATMENTS

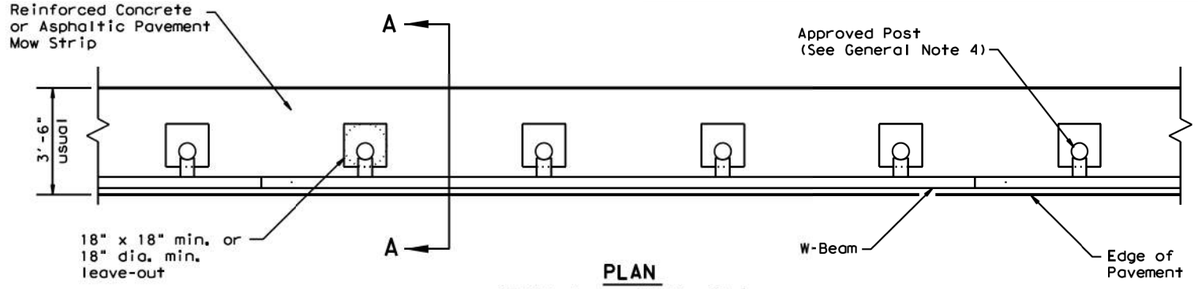

PLAN

GF(31) shown with Mow Strip
(See GF(31) standard sheet for proper installation)

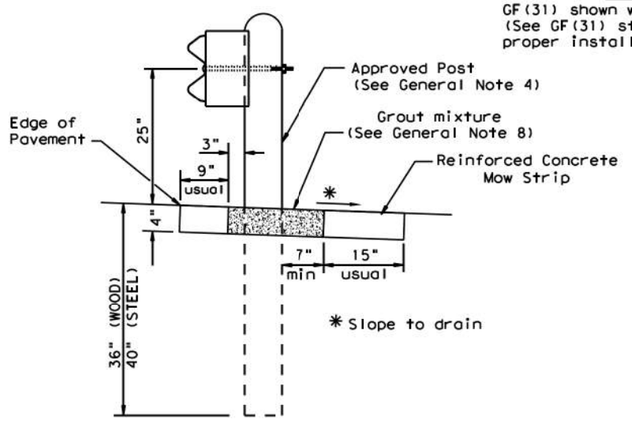

SECTION A-A

Typical

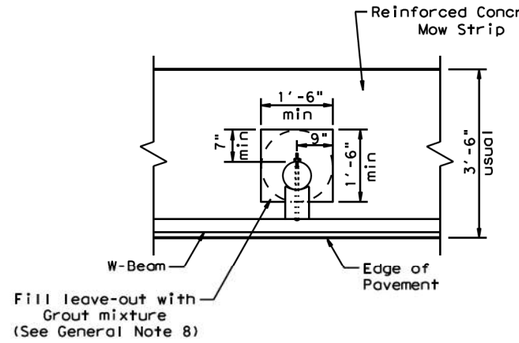

MOW STRIP DETAIL

Reinforced Concrete Mow Strip
with 18" x 18" Square or
18" Dia. minimum leave-out.

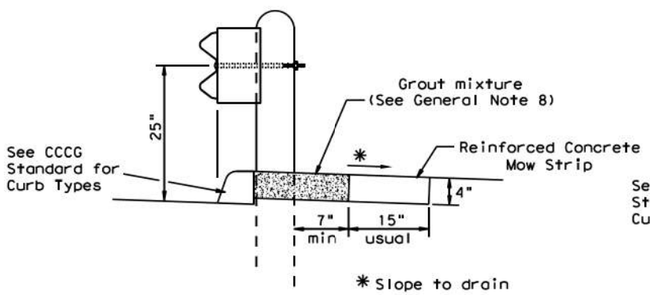

CURB OPTION (1)

This option will increase the post embedment throughout the system.

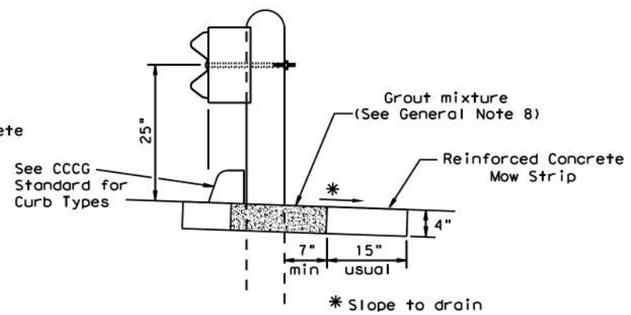

CURB OPTION (2)

Curb shown on top of mow strip

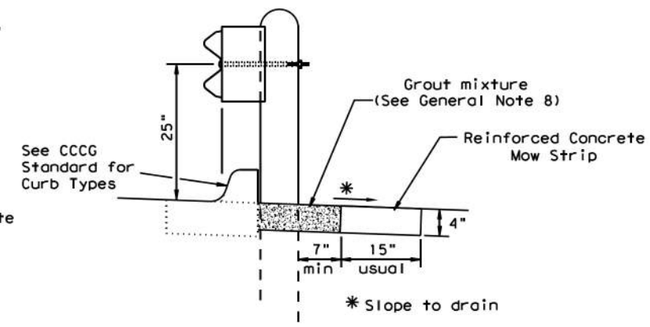

CURB OPTION (3)

Note: Site Condition(s)

Site conditions may exist where grading is required for the proper installation of metal guard fence and end treatments.

Approach grading or mow strip may be decreased or eliminated, as directed by the Engineer.

GENERAL NOTES

1. This mow strip design is for use with metal beam guard fence, guard fence transitions, and guard fence end treatments. See applicable GF(31) MBGF or GF(31) Transition Standard sheet for additional information.
2. Mow strips shall be reinforced concrete with (wire mesh or synthetic fiber), as shown on the plans and will be paid for under the pertinent bid item. Reinforced concrete shall be placed in accordance with Item 432, "Riprap." The use of the synthetic fiber in lieu of steel reinforcing is acceptable, provided the fiber producer is on the Department Material Producer List (MPL), maintained by TxDOT, Construction Division.
3. The leave-out behind the post shall be a minimum of 7".
4. Only steel (W6 x 8.5 or W6 x 9.0), or 7 ½" Dia. round wood posts are acceptable for use in the mow strip. See GF(31) Standard for additional details.
5. Other curb placement options may be used. Curbs are not considered part of the mow strip and will be paid for under other pertinent bid item.
6. Thickness of the mow strip will be 4".
7. The limits of payment for reinforced concrete will include leave-outs for the posts.
8. The leave-outs shall be filled with a Grout mixture consisting of: 2719 pounds sand, 188 pounds Type 1 or II cement, and 550 pounds of water per cubic yard, with a 28-day compressive strength of approximately 230 psi or less. Provide grout with a consistency that will flow into and completely fill all voids. Due to auger size, larger leave-out dimensions are acceptable from both an impact performance and maintenance repair standpoint (Suggested Maximum leave-out of 20"). Payment for furnishing and placing the grout mixture will be subsidiary to the pay item of riprap mow strip.

Texas Department of Transportation

Design Division Standard

METAL BEAM GUARD FENCE (MOW STRIP) TL-3 MASH COMPLIANT

GF(31)MS-19

FILE: gf31ms19.dgn	DN: TxDOT	CK: KM	DW: VP	CK: CGL/AG
©TxDOT: NOVEMBER 2019	CONT	SECT	JOB	HIGHWAY
REVISIONS				
	DIST	COUNTY		SHEET NO.
				113

DISCLAIMER:
The use of this standard is governed by the "Texas Engineering Practice Act". No warranty of any kind is made by TxDOT for any purpose whatsoever. TxDOT assumes no responsibility for the conversion of this standard to other formats or for incorrect results or damages resulting from its use.

DATE:
FILE:

TYPE 1

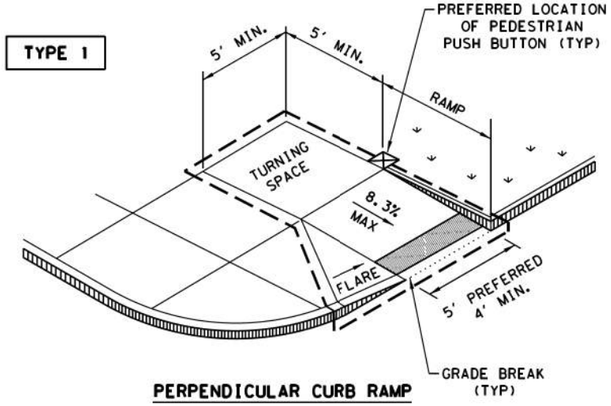

PERPENDICULAR CURB RAMP

TYPE 2

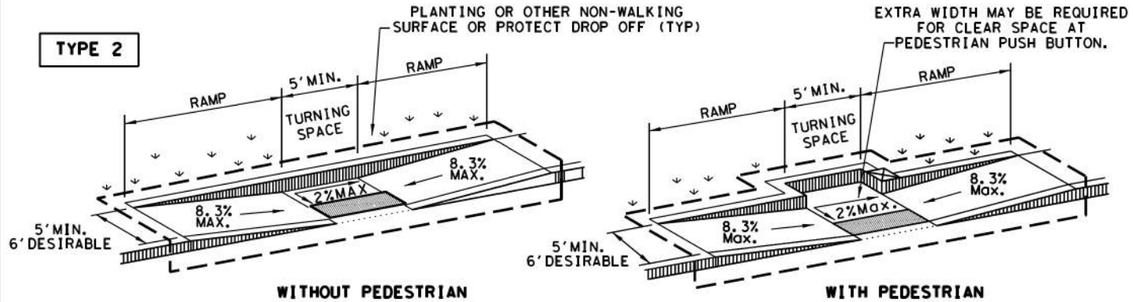

WITHOUT PEDESTRIAN PUSH BUTTON

WITH PEDESTRIAN PUSH BUTTON

PARALLEL CURB RAMP

TYPE 3

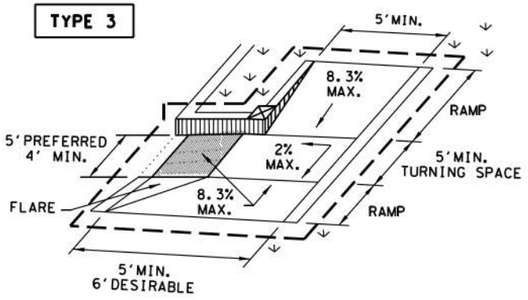

TYPE 6

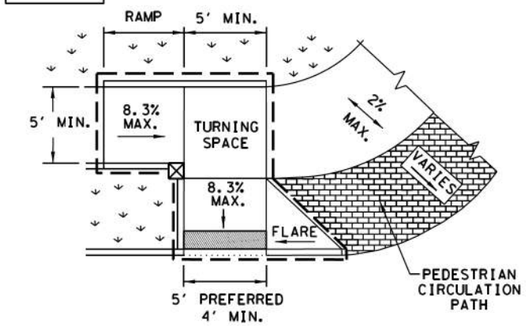

COMBINATION CURB RAMPS

TYPE 20

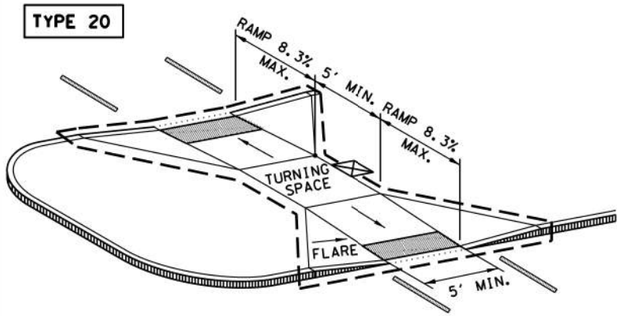

CURB RAMPS AT MEDIAN ISLANDS

TYPE 7

(SIDEWALK SET BACK FROM CURB)

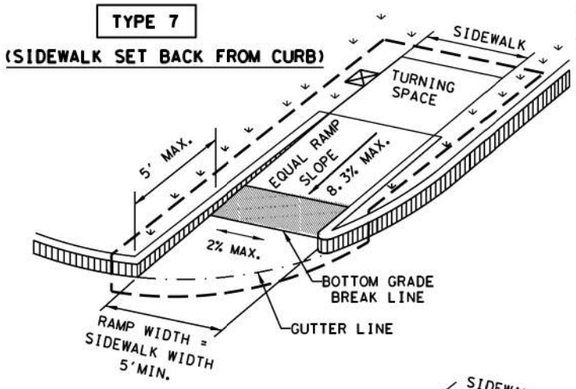

CROSS SLOPE NOT TO EXCEED 2% ON ANY PORTION OF RAMP, TURNING SPACE OR TRANSITION TO STREET.

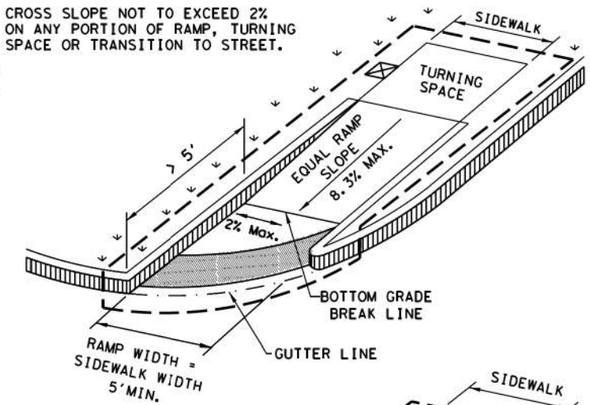

TYPE 10

(SIDEWALK ADJACENT TO CURB)

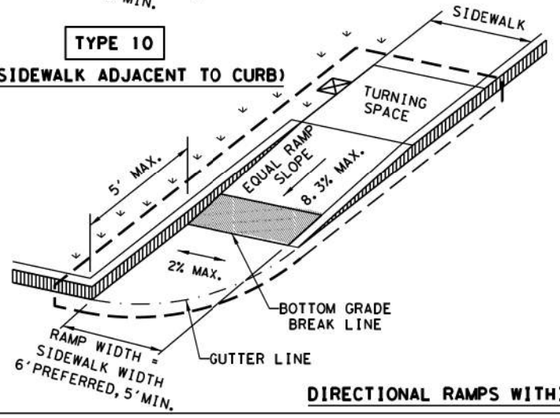

CROSS SLOPE NOT TO EXCEED 2% ON ANY PORTION OF RAMP, TURNING SPACE OR TRANSITION TO STREET.

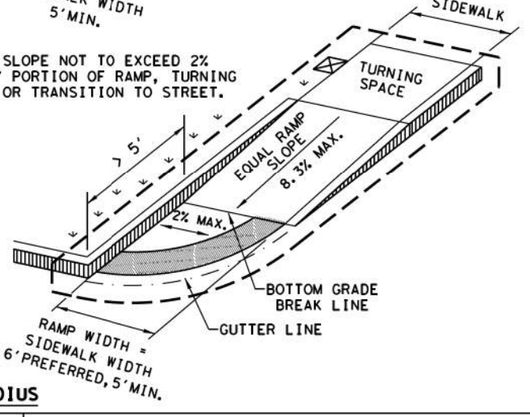

DIRECTIONAL RAMPS WITHIN RADIUS

TYPE 5

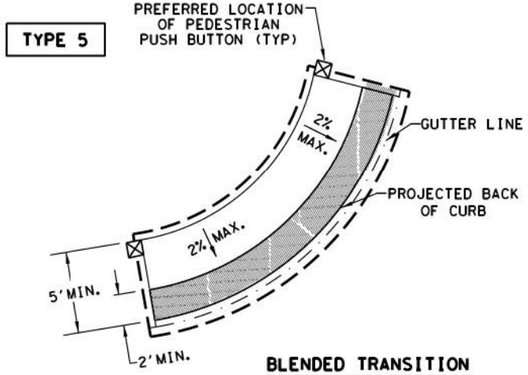

BLENDED TRANSITION
(FLUSH LANDING)

TYPE 21

INSTALL DETECTABLE WARNING SURFACE AT EACH END OF THE CUT-THROUGH RAMP WITH A MINIMUM 2' USUAL SIDEWALK SURFACE BETWEEN. IF MEDIAN IS LESS THAN 6' WIDE, ELIMINATE DETECTABLE WARNING SURFACES.

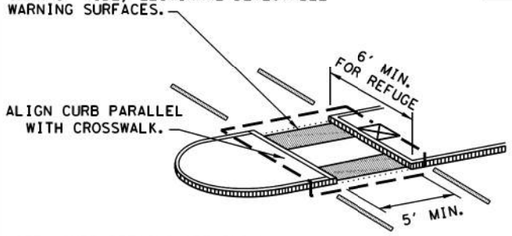

NOTE: CURB DETAILS ARE SHOWN ELSEWHERE IN THE PLANS.

TYPE 22

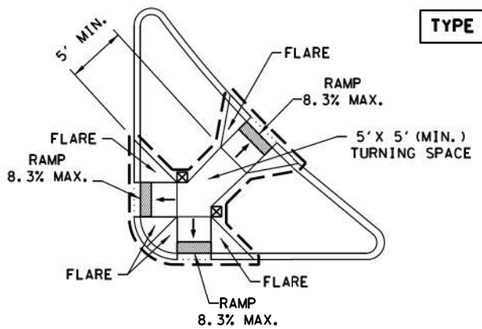

COMBINATION ISLAND RAMPS

BOTTOM GRADE BREAK OF CURB RAMP WILL NORMALLY BE AT GUTTER LINE. SURFACE SLOPES AT GRADE BREAKS SHALL BE FLUSH.

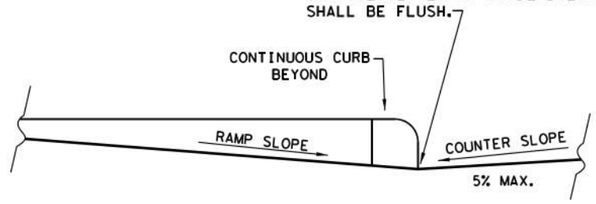

TYPICAL SECTION OF PERPENDICULAR CURB RAMP AT CONNECTION TO ROADWAY

NOTES / LEGEND:

SEE GENERAL NOTES ON SHEET 2 OF 4 FOR MORE INFORMATION.

DENOTES PLANTING OR NON-WALKING SURFACE NOT PART OF PEDESTRIAN CIRCULATION PATH.

DETECTABLE WARNING SURFACE

DENOTES PREFERRED LOCATION OF PEDESTRIAN PUSH BUTTON IF APPLICABLE.

GUTTER LINE

GRADE BREAK

RAMP LIMITS OF PAYMENT

Texas Department of Transportation

Design Division Standard

PEDESTRIAN FACILITIES CURB RAMPS

PED-18

FILE: ped18	DN: TxDOT	DW: VP	CK: KM	CK: PK & JG
© TxDOT: MARCH, 2002	CONT	SECT	JOB	HIGHWAY
REVISIONS				
REVISED 08, 2009	DIST	COUNTY		SHEET NO.
REVISED 06, 2012				114
REVISED 01, 2018				

DISCLAIMER:
The use of this standard is governed by the "Texas Engineering Practice Act". No warranty of any kind is made by TxDOT for any purpose whatsoever. TxDOT assumes no responsibility for the conversion of this standard to other formats or for incorrect results or damages resulting from its use.

DATE:
FILE:

GENERAL NOTES

CURB RAMPS

1. Install a curb ramp or blended transition at each pedestrian street crossing.
2. All slopes shown are maximum allowable. Cross slopes of 1.5% and lesser running should be used. Adjust curb ramp length or grade of approach sidewalks as directed.
3. Maximum allowable cross slope on sidewalk and curb ramp surfaces is 2%.
4. The minimum sidewalk width is 5'. Where the sidewalk is adjacent to the back of curb, a 6' sidewalk width is desirable. Where a 5' sidewalk cannot be provided due to site constraints, sidewalk width may be reduced to 4' for short distances. 5'x 5' passing areas at intervals not to exceed 200' are required.
5. Turning Spaces shall be 5'x 5' minimum. Cross slope shall be maximum 2%.
6. Clear space at the bottom of curb ramps shall be a minimum of 4'x 4' wholly contained within the crosswalk and wholly outside the parallel vehicular travel path.
7. Provide flared sides where the pedestrian circulation path crosses the curb ramp. Flared sides shall be sloped at 10% maximum, measured parallel to the curb. Returned curbs may be used only where pedestrians would not normally walk across the ramp, either because the adjacent surface is planted, substantially obstructed, or otherwise protected.
8. Additional information on curb ramp location, design, light reflective value and texture may be found in the latest draft of the Proposed Guidelines for Pedestrian Facilities in the Public Right of Way (PROWAG) as published by the U.S. Architectural and Transportation Barriers Compliance Board (Access Board).
9. To serve as a pedestrian refuge area, the median should be a minimum of 6' wide, measured from back of curbs. Medians should be designed to provide accessible passage over or through them.
10. Small channelization islands, which do not provide a minimum 5'x 5' landing at the top of curb ramps, shall be cut through level with the surface of the street.
11. Crosswalk dimensions, crosswalk markings and stop bar locations shall be as shown elsewhere in the plans. At intersections where crosswalk markings are not required, curb ramps shall align with theoretical crosswalks unless otherwise directed.
12. Provide curb ramps to connect the pedestrian access route at each pedestrian street crossing. Handrails are not required on curb ramps.
13. Curb ramps and landings shall be constructed and paid for in accordance with Item 531 "Sidewalks".
14. Place concrete at a minimum depth of 5" for ramps, flares and landings, unless otherwise directed.
15. Furnish and install No. 3 reinforcing steel bars at 18" o.c. both ways, unless otherwise directed.
16. Provide a smooth transition where the curb ramps connect to the street.
17. Curbs shown on sheet 1 within the limits of payment are considered part of the curb ramp for payment, whether it is concrete curb, gutter, or combined curb and gutter.
18. Existing features that comply with applicalble standards may remain in place unless otherwise shown on the plans.

DETECTABLE WARNING MATERIAL

19. Curb ramps must contain a detectable warning surface that consists of raised truncated domes complying with PROWAG. The surface must contrast visually with adjoining surfaces, including side flares. Furnish and install an approved cast-in-place dark brown or dark red detectable warning surface material adjacent to uncolored concrete, unless specified elsewhere in the plans.
20. Detectable Warning Materials must meet TxDOT Departmental Materials Specification DMS 4350 and be listed on the Material Producer List. Install products in accordance with manufacturer's specifications.
21. Detectable warning surfaces must be firm, stable and slip resistant.
22. Detectable warning surfaces shall be a minimum of 24 inches in depth in the direction of pedestrian travel, and extend the full width of the curb ramp or landing where the pedestrian access route enters the street.
23. Detectable warning surfaces shall be located so that the edge nearest the curb line is at the back of curb and neither end of that edge is greater than 5 feet from the back of curb. Detectable warning surfaces may be curved along the corner radius.
24. Shaded areas on Sheet 1 of 4 indicate the approximate location for the detectable warning surface for each curb ramp type.

DETECTABLE WARNING PAVERS (IF USED)

25. Furnish detectable warning paver units meeting all requirements of ASTM C-936, C-33. Lay in a two by two unit basket weave pattern or as directed.
26. Lay full-size units first followed by closure units consisting of at least 25 percent (25%) of a full unit. Cut detectable warning paver units using a power saw.

SIDEWALKS

27. Provide clear ground space at operable parts, including pedestrian push buttons. Operable parts shall be placed within unobstructed reach range specified in PROWAG section R406.
28. Place traffic signal or illumination poles, ground boxes, controller boxes, signs, drainage facilities and other items so as not to obstruct the pedestrian access route or clear ground space.
29. Street grades and cross slopes shall be as shown elsewhere in the plans.
30. Changes in level greater than 1/4 inch are not permitted.
31. The least possible grade should be used to maximize accessibility. The running slope of sidewalks and crosswalks within the public right of way may follow the grade of the parallel roadway. Where a continuous grade greater than five percent (5%) must be provided, handrails may be desirable to improve accessibility. Handrails may also be needed to protect pedestrians from potentially hazardous conditions. If provided, handrails shall comply with PROWAG R409.
32. Handrail extensions shall not protrude into the usable landing area or into intersecting pedestrian routes.
33. Driveways and turnouts shall be constructed and paid for in accordance with Item "Intersections, Driveways and Turnouts". Sidewalks shall be constructed and paid for in accordance with Item, "Sidewalks".
34. Sidewalk details are shown elsewhere in the plans.

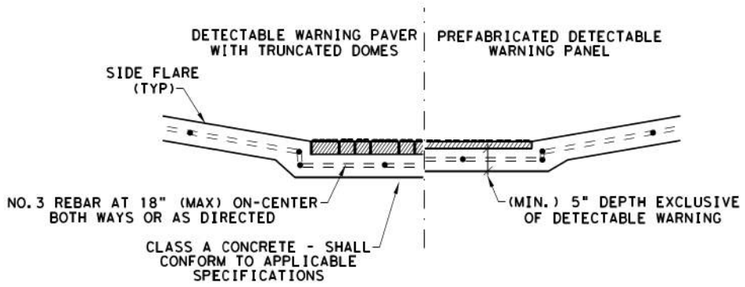

SECTION VIEW DETAIL
CURB RAMP AT DETECTIBLE WARNINGS

DETECTABLE WARNING SURFACE DETAILS

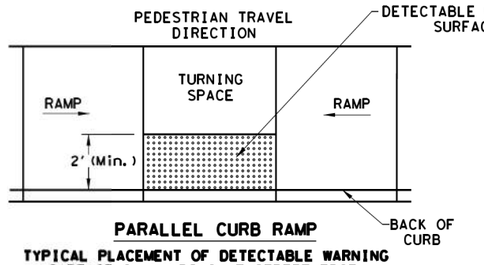

PARALLEL CURB RAMP

TYPICAL PLACEMENT OF DETECTABLE WARNING SURFACE ON LANDING AT STREET EDGE.

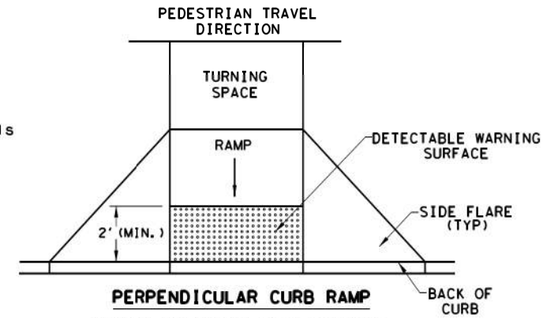

PERPENDICULAR CURB RAMP

TYPICAL PLACEMENT OF DETECTABLE WARNING SURFACE ON SLOPING RAMP RUN.

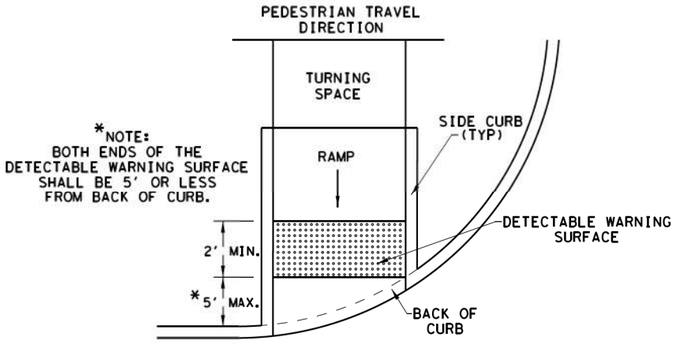

DIRECTIONAL CURB RAMP

TYPICAL PLACEMENT OF DETECTABLE WARNING SURFACE ON SLOPING RAMP RUN.

Texas Department of Transportation | Design Division Standard

PEDESTRIAN FACILITIES CURB RAMPS

PED-18

FILE: ped18	DN: TxDOT		CK: KM	CK: PK & JG
© TxDOT: MARCH, 2002	CONT	SECT	JOB	HIGHWAY
REVISIONS				
REVISED 08, 2005	DIST	COUNTY		SHEET NO.
REVISED 06, 2012				115
REVISED 01, 2018				

DISCLAIMER:
The use of this standard is governed by the "Texas Engineering Practice Act". No warranty of any kind is made by TxDOT for any purpose whatsoever. TxDOT assumes no responsibility for the conversion of this standard to other formats or for incorrect results or damages resulting from its use.

DATE:
FILE:

SIDEWALK TREATMENT AT DRIVEWAYS

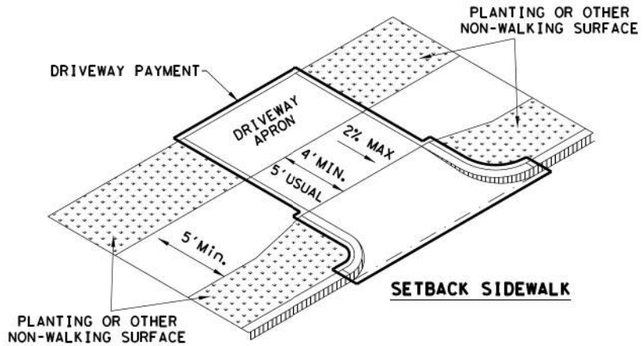

SETBACK SIDEWALK

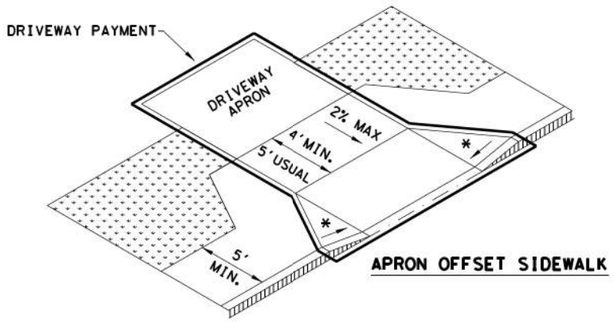

APRON OFFSET SIDEWALK

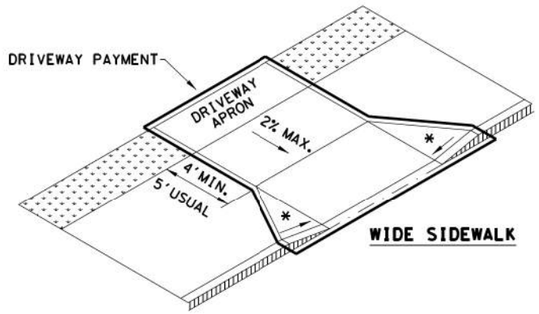

WIDE SIDEWALK

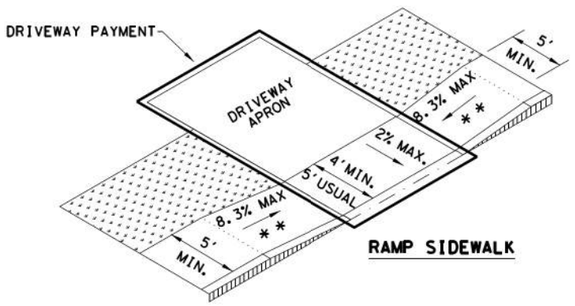

RAMP SIDEWALK

NOTES:

* WHERE DRIVEWAYS CROSS THE PEDESTRIAN ROUTE, SIDES SHALL BE FLARED AT 10% MAX SLOPE.

** IF CURB HEIGHT IS GREATER THAN 6 INCHES, USE GRADE LESS THAN OR EQUAL TO 5%. HANDRAIL AND DETECTABLE WARNING ARE NOT REQUIRED.

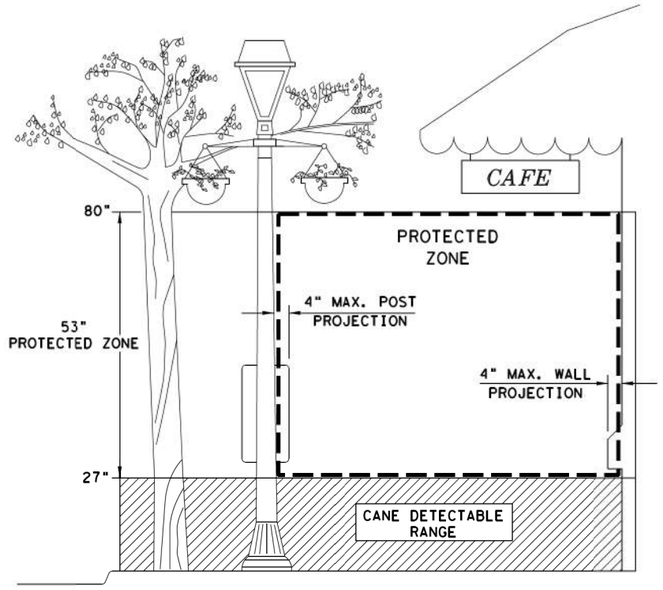

PROTECTED ZONE

NOTE: IN PEDESTRIAN CIRCULATION AREA, MAXIMUM 4" PROJECTION FOR POST OR WALL MOUNTED OBJECTS BETWEEN 27" AND 80" ABOVE THE SURFACE.

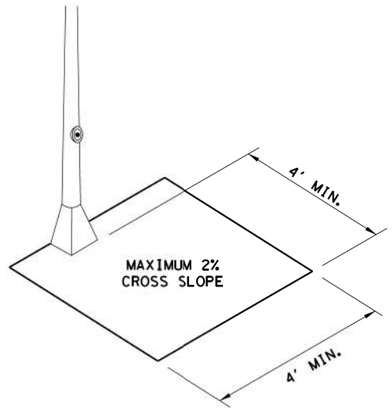

CLEAR SPACE ADJACENT TO PEDESTRIAN PUSH BUTTON

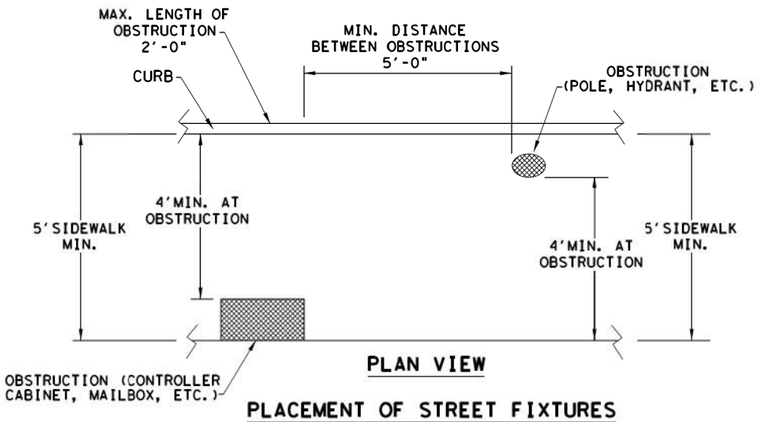

PLAN VIEW

PLACEMENT OF STREET FIXTURES

NOTE: ITEMS NOT INTENDED FOR PUBLIC USE. MINIMUM 4' X 4' CLEAR GROUND SPACE REQUIRED AT PUBLIC USE FIXTURES.

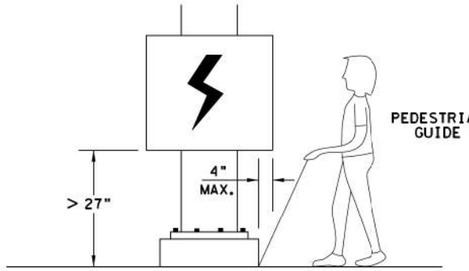

WHEN AN OBSTRUCTION OF A HEIGHT GREATER THAN 27" FROM THE SURFACE WOULD CREATE A PROTRUSION OF MORE THAN 4" INTO THE PEDESTRIAN CIRCULATION AREA, CONSTRUCT ADDITIONAL CURB OR FOUNDATION AT THE BOTTOM TO PROVIDE A MAXIMUM 4" OVERHANG.

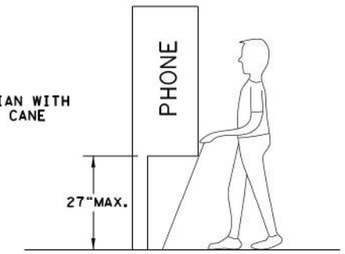

PROTRUDING OBJECTS OF A HEIGHT ≤ 27" ARE DETECTABLE BY CANE AND DO NOT REQUIRE ADDITIONAL TREATMENT.

DETECTION BARRIER FOR VERTICAL CLEARANCE < 80"

Texas Department of Transportation

Design Division Standard

PEDESTRIAN FACILITIES CURB RAMPS

PED-18

FILE: ped18	DN: TxDOT		DW: VP	CK: KM	CK: PK & JG
© TxDOT: MARCH, 2002	CONT	SECT	JOB	HIGHWAY	
REVISIONS					
REVISED 08,2005	DIST	COUNTY			SHEET NO.
REVISED 06,2012					116
REVISED 01,2018					

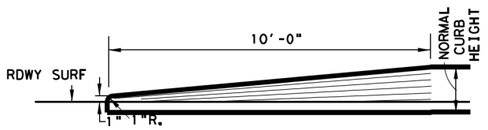

TRANSITION FOR CONCRETE CURB ENDS

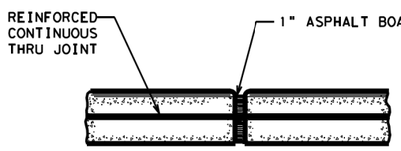

EXPANSION JOINT DETAIL

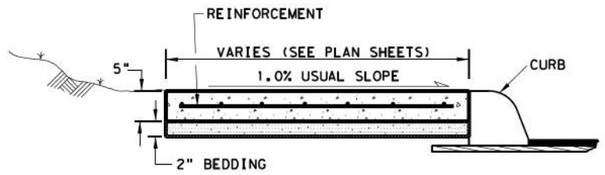

SIDEWALK & SHARED USE PATH (S.U.P.) TYP. SECT.

SIDEWALK OR S.U.P. EXPANSION JOINTS ARE TO BE AT A MAX. SPACING OF 40' AND COINCIDE WITH THE CURB EXPANSION JOINTS.

NOTE: TOOLED OR SAWED CONTRACTION JOINTS ARE NOT ALLOWED.

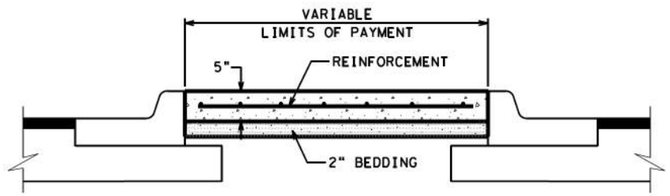

RIPRAP MEDIAN DETAIL

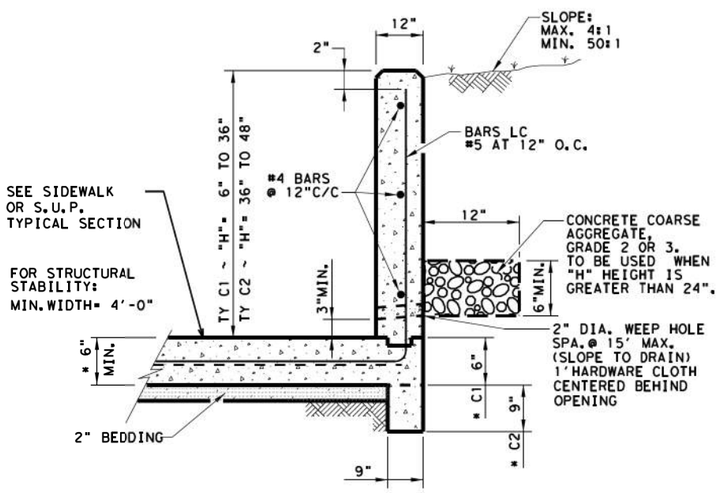

CONC CURB (TY C1) & (TY C2)

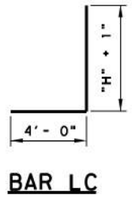

BAR LC

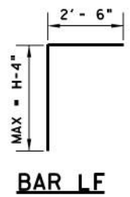

BAR LF

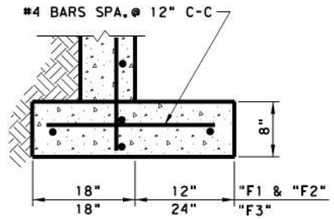

FOOTING DETAIL

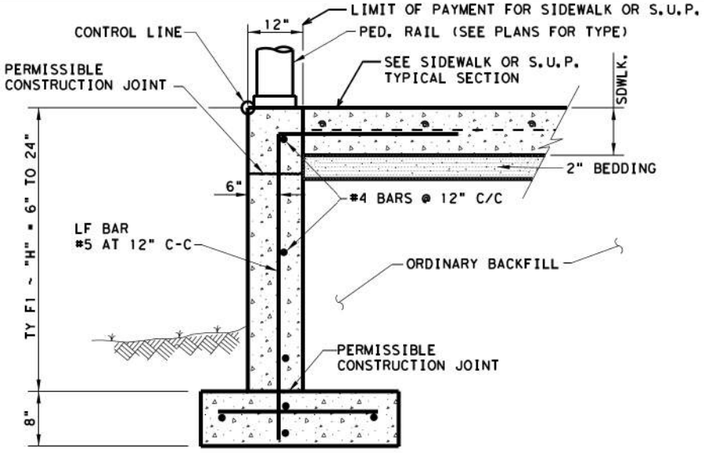

CONC CURB (TY F1)‡

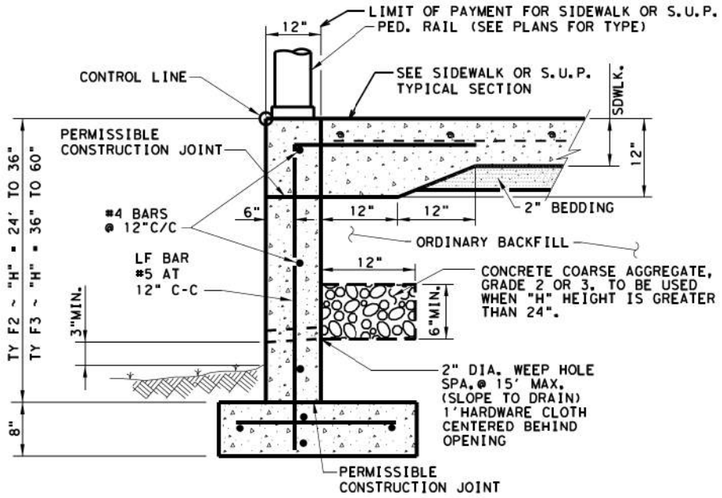

CONC CURB (TY F2) & (TY F3)‡

SIDEWALK, SHARED USE PATH, AND MEDIAN NOTES

Reinforcement will be in accordance with Item 432.3.1. Fiber reinforcement is not allowed. Class A and B Concrete are allowed to use Coarse Aggregate Grades 1-8.

Bedding may be sand, base, or RAP bedding. Furnish base meeting the requirement for any type or grade in accordance with Item 247. Base compressive strengths are waived. RAP must be 100% passing a 1 in. sieve. Bedding must be placed using ordinary compaction.

If roots are encountered verify with the Engineer prior to accommodating or removing 2 in. diameter or larger roots. Root removal must be in accordance with Item 752.4.2. Roots may remain in the bedding or base. For improvements within 6 in. of a root, the concrete thickness may be reduced by 1 in. and the bedding increased by 1 in. to minimize impacts to the roots. Adjust bedding and surface profile to provide a 1 in. bedding cushion around the roots. The surface profile may be adjusted to the extent allowed by ADA. This work is subsidiary.

CONCRETE CURB NOTES:
All Concrete, including adjacent sidewalk or S.U.P., shall be Class "C".
All Reinforcing Steel shall be Grade 60.
Minimum 4' sidewalk width for CONC CURB (TYPES C1 & C2).

‡ Until the sidewalk is complete, lateral support for the "F" curbs will be required.

ALL WORK SHOWN BEYOND TYPICAL SIDEWALK, S.U.P., AND PED RAIL IS SUBSIDIARY.

DESIGN SOIL PARAMETERS:
Soil Unit Wt. = 120 pcf
Phi = 30 Degrees
Cohesion = 50 psf
Min. PI = 15
Max. PI = 30
SURCHARGE:
TYPE F CURB q = 2' Adjacent to sidewalk
Max. slope behind TYPE C Curb = 4:1
Min. Factor of Safety against sliding is 1.5.
Designed in accordance with current AASHTO Standards and Interim Specifications.

NOT TO SCALE

Texas Department of Transportation | Austin District Standard

MISCELLANEOUS CURB, PATH, SIDEWALK, AND MEDIAN DETAILS

MCPSWMD-19 (AUS)

©TxDOT 2020

REVISIONS
04/19a APPROVED

CONT	SECT	JOB	HIGHWAY
DIST	COUNTY		SHEET NO.
			117

DATE: 9/21/2020 12:55:01 PM
FILE: pw:\\txdot.projectwiseonline.com:TxDOT4\Documents\14 - AUS_Standards\District Design Standards\Approved\MCPSWMD-19(AUS).dgn

DISCLAIMER:
The use of this standard is governed by the "Texas Engineering Practice Act". No warranty of any kind is made by TxDOT for any purpose whatsoever. TxDOT assumes no responsibility for the conversion of this standard to other formats or for incorrect results or damages resulting from its use.

DATE:
FILE:

TYPICAL CROSSING LAYOUTS
SEE SHEET 1 OF 4 FOR DETAILS AND DIMENSIONS

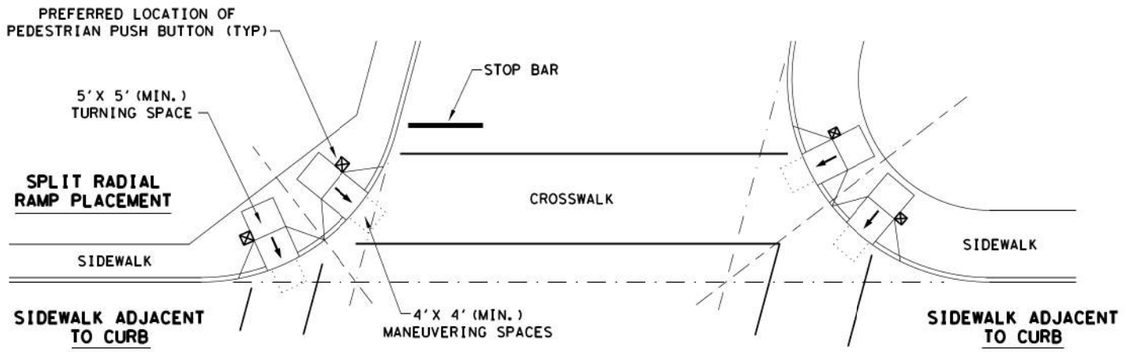

SKEWED INTERSECTION WITH "LARGE" RADIUS

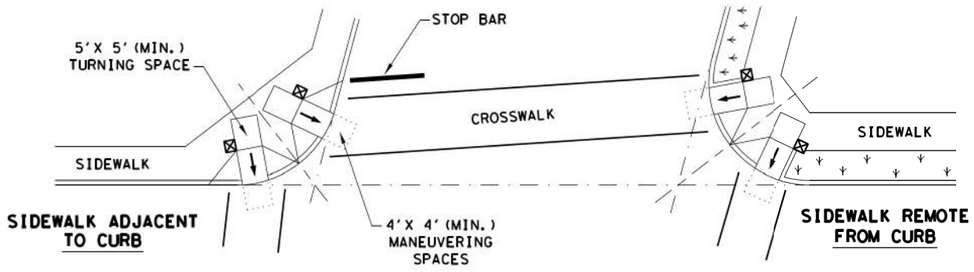

SKEWED INTERSECTION WITH "SMALL" RADIUS

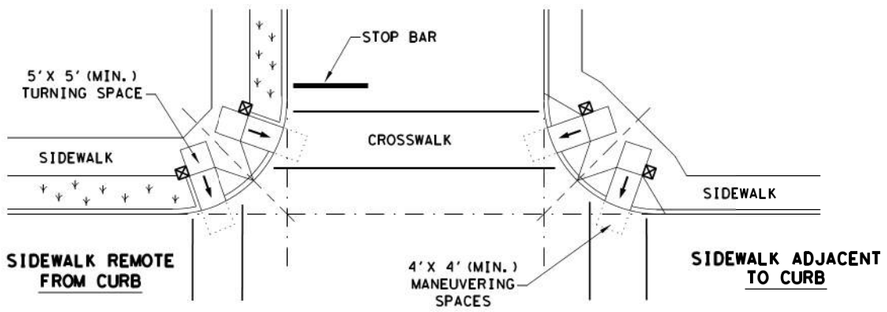

NORMAL INTERSECTION WITH "SMALL" RADIUS

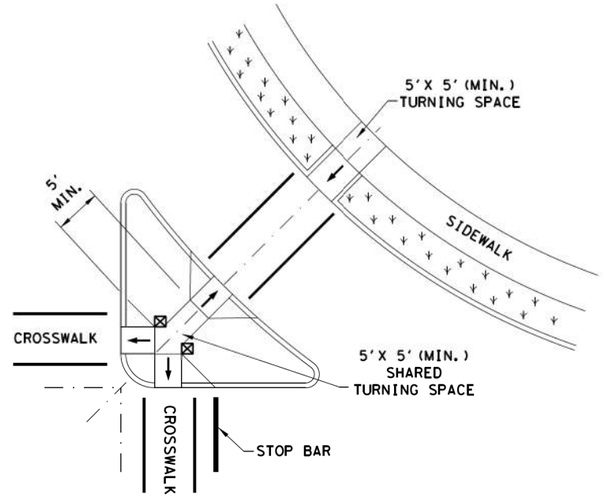

AT INTERSECTION
W/FREE RIGHT TURN & ISLAND

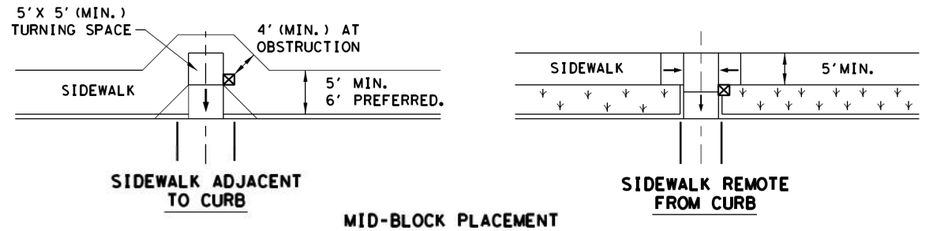

MID-BLOCK PLACEMENT
PERPENDICULAR RAMPS

LEGEND:

SHOWS DOWNWARD SLOPE. →

DENOTES PREFERRED LOCATION OF PEDESTRIAN PUSH BUTTON (IF APPLICABLE). ☒

DENOTES PLANTING OR NON-WALKING SURFACE NOT PART OF PEDESTRIAN CIRCULATION PATH.

Texas Department of Transportation | Design Division Standard

PEDESTRIAN FACILITIES
CURB RAMPS

PED-18

FILE: ped18	DN: TxDOT	DW: VP	CK: KM	CK: PK & JG
© TxDOT: MARCH, 2002	CONT	SECT	JOB	HIGHWAY
REVISIONS				
REVISED 08, 2005 REVISED 06, 2012 REVISED 01, 2018	DIST	COUNTY		SHEET NO.
				118

DISCLAIMER:
The use of this standard is governed by the "Texas Engineering Practice Act". No warranty of any kind is made by TxDOT for any purpose whatsoever. TxDOT assumes no responsibility for the conversion of this standard to other formats or for incorrect results or damages resulting from its use.

DATE:
FILE:

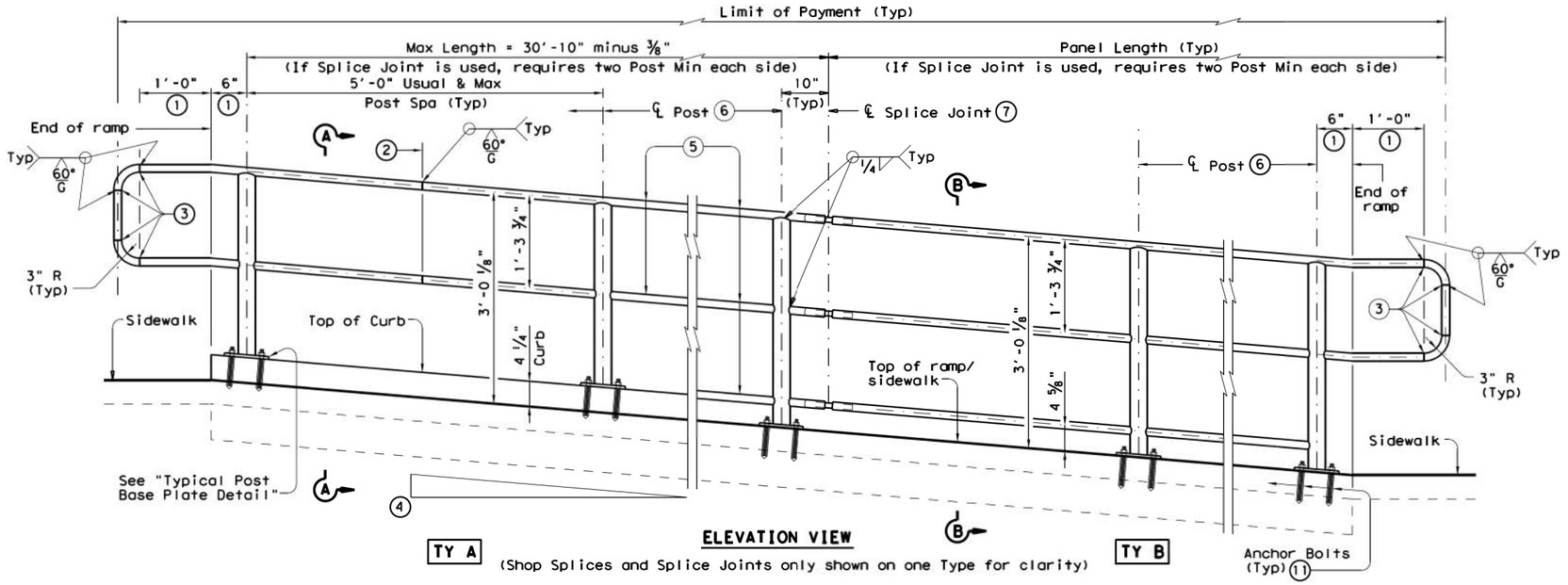

ELEVATION VIEW

(Shop Splices and Splice Joints only shown on one Type for clarity)

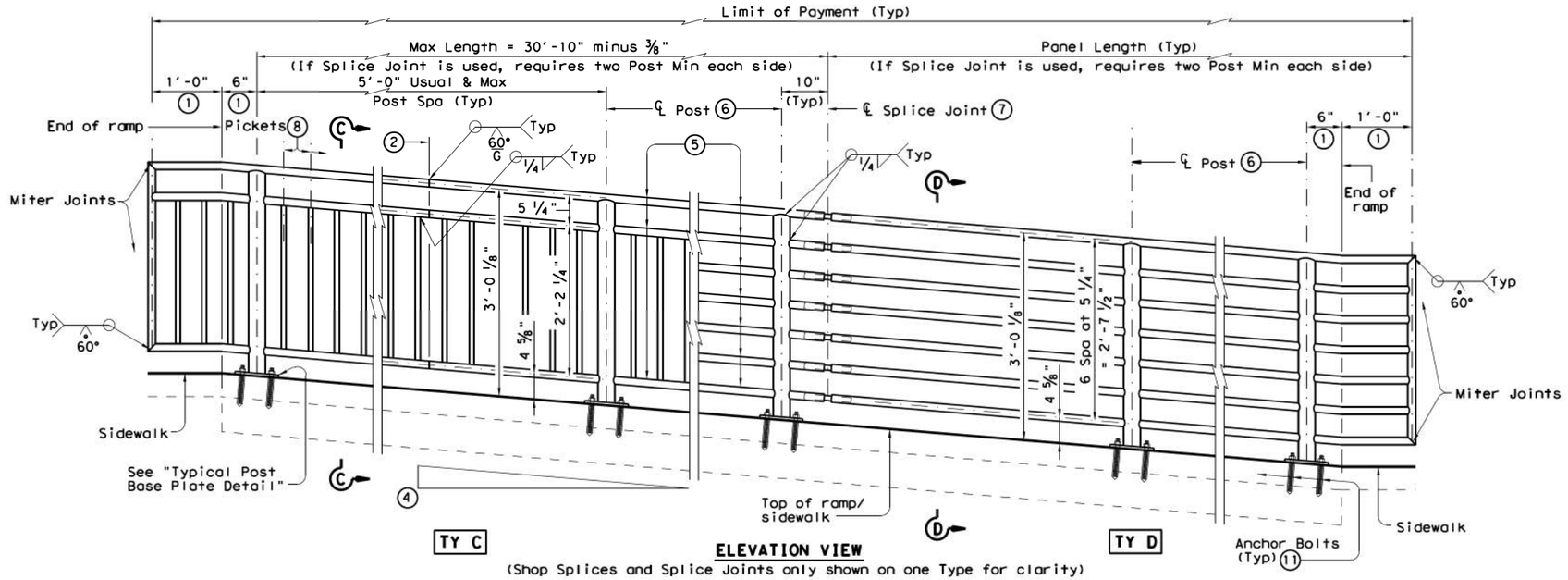

ELEVATION VIEW

(Shop Splices and Splice Joints only shown on one Type for clarity)

RECOMMENDED USAGE ⑨⑩	
Dropoff Height/ Condition	Recommended Rail Options
<30" dropoff	TY A, TY B, TY C, or TY D
≥ 30" dropoff, or along Bike Path	TY E or TY F

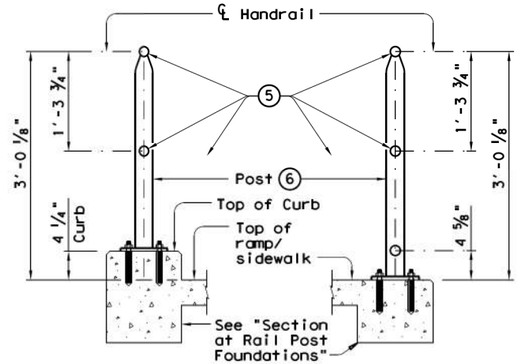

SECTION A-A
(Showing Handrail **TY A**)

SECTION B-B
(Showing Handrail **TY B**)

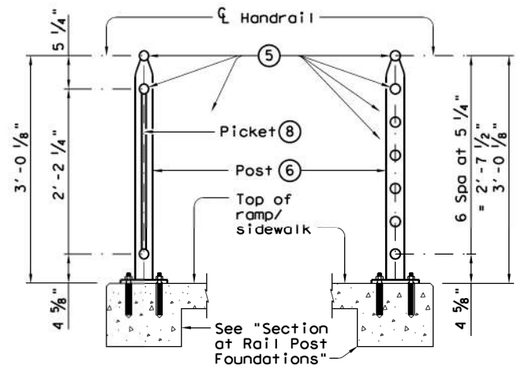

SECTION C-C
(Showing Handrail **TY C**)

SECTION D-D
(Showing Handrail **TY D**)

1. Parallel to ground.
2. One shop splice per panel is permitted with minimum 85 percent penetration. The weld may be square groove or single vee groove. Grind smooth.
3. Shop splice is permitted with minimum 85 percent penetration. The weld may be square groove or single vee groove. Grind smooth.
4. See Ramp Details located elsewhere in plans for ramp slope and dimensions. Maximum ramp slope will not exceed 8.3 percent. Level landing required for each 30" rise if grade exceeds 5 percent.
5. 1 ½" Dia. Standard Pipe (1.900" O.D., 0.145" wall thickness). Parallel to ramp / sidewalk. Provide holes as needed in 1 ½" Dia. pipe for galvanizing drainage and venting.
6. 2 ½" Dia. Standard Pipe (2.875" O.D., 0.203" wall thickness). See "Post Mount Detail" for crimping and trimming post to fit Dia. of top rail. Provide holes as needed in post for galvanizing drainage and venting. Plumb all posts.
7. See "Handrail Fabrication Details" for Splice Joints.
8. ℄ ⅝" Dia. Round Bar equal spacing at 4 ½" Max. Plumb all pickets.
9. When needed for accessibility (grade > 5 percent) or as needed for pedestrian safety.
10. Not to be used on bridges.
11. See "General Notes" for anchor bolt information.

SHEET 1 OF 3

Texas Department of Transportation

Design Division Standard

PEDESTRIAN HANDRAIL DETAILS

PRD-13

FILE: prd13.dgn	DN: TxDOT	CK: AM	DW: JTR	CK: CGL
©TxDOT December 2006	CONT	SECT	JOB	HIGHWAY
REVISIONS REVISED MAY, 2013 (VP)	DIST	COUNTY		SHEET NO. 119

DISCLAIMER:
The use of this standard is governed by the "Texas Engineering Practice Act". No warranty of any kind is made by TxDOT for any purpose whatsoever. TxDOT assumes no responsibility for the conversion of this standard to other formats or for incorrect results or damages resulting from its use.

DATE:
FILE:

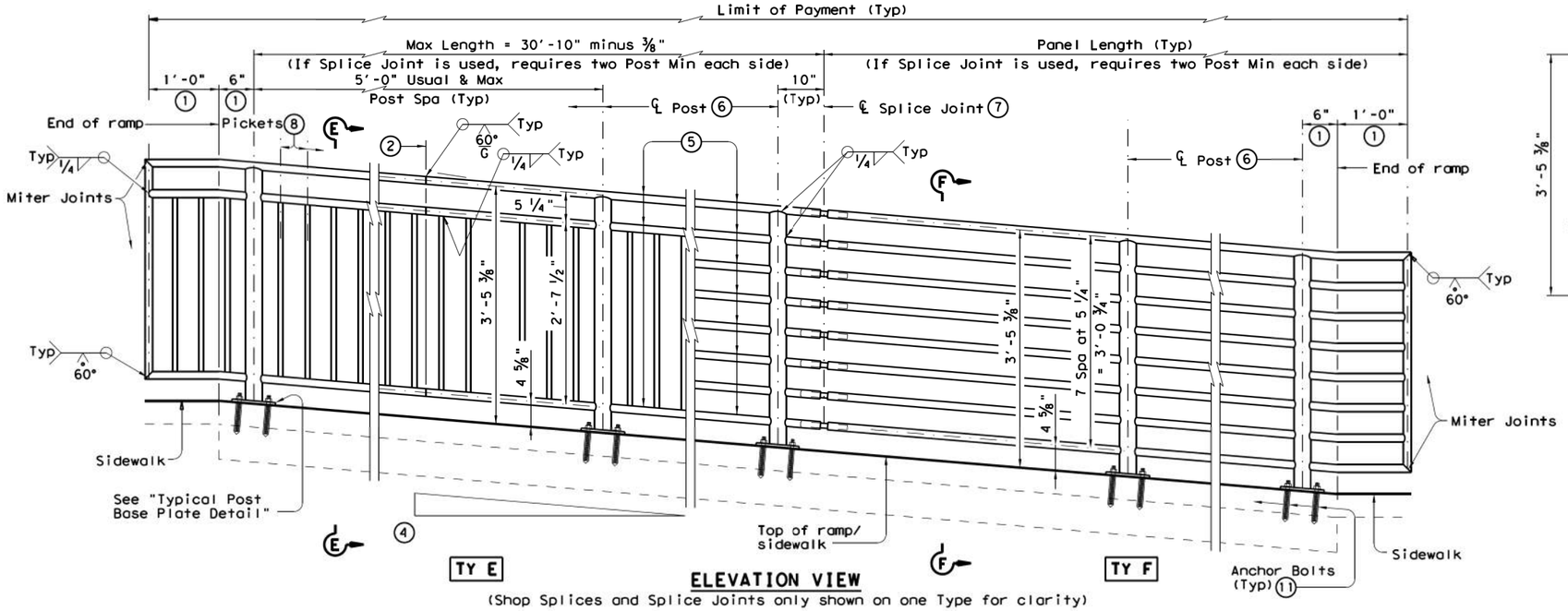

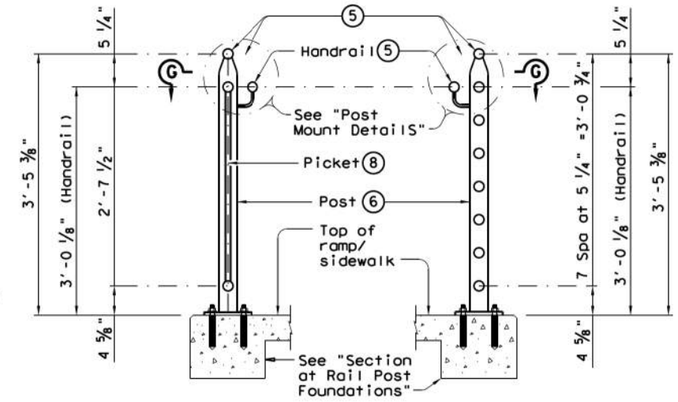

SECTION E-E
(Showing Handrail **TY E**)

SECTION F-F
(Showing Handrail **TY F**)

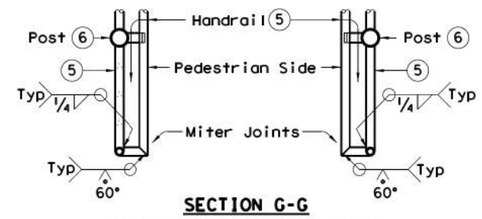

SECTION G-G
(Showing Handrail Termination)

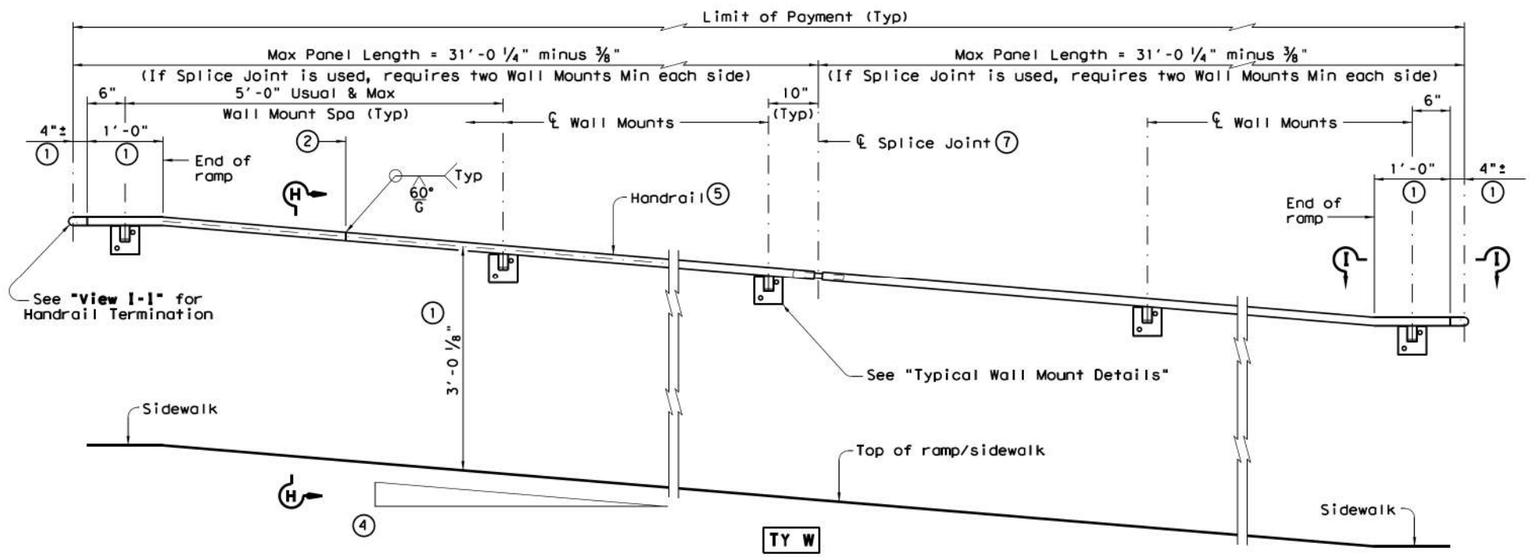

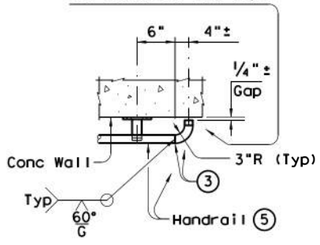

VIEW 1-1
(Showing Handrail Termination)

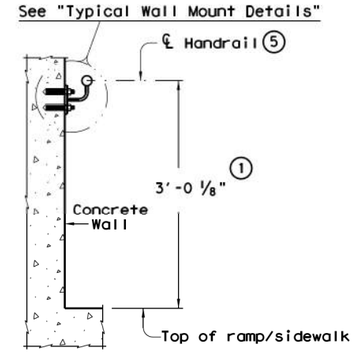

SECTION H-H
(Showing Handrail **TY W**)

1. Parallel to ground.
2. One shop splice per panel is permitted with minimum 85 percent penetration. The weld may be square groove or single vee groove. Grind smooth.
3. Shop splice is permitted with minimum 85 percent penetration. The weld may be square groove or single vee groove. Grind smooth.
4. See Ramp Details located elsewhere in plans for ramp slope and dimensions. Maximum ramp slope will not exceed 8.3 percent. Level landing required for each 30" rise if grade exceeds 5 percent.
5. 1 ½" Dia. Standard Pipe (1.900" O.D., 0.145" wall thickness). Parallel to ramp / sidewalk. Provide holes as needed in 1 ½" Dia. pipe for galvanizing drainage and venting.
6. 2 ½" Dia. Standard Pipe (2.875" O.D., 0.203" wall thickness). See "Post Mount Detail" for crimping and trimming post to fit Dia. of top rail. Provide holes as needed in post for galvanizing drainage and venting. Plumb all posts.
7. See "Handrail Fabrication Details" for Splice Joints.
8. ℄ ⅝" Dia. Round Bar equal spacing at 4 ½" Max. Plumb all pickets.
11. See "General Notes" for anchor bolt information.

SHEET 2 OF 3

Texas Department of Transportation | Design Division Standard

PEDESTRIAN HANDRAIL DETAILS

PRD-13

FILE: prd13.dgn	DN: TxDOT	CK: AM	DW: JTR	CK: CGL
©TxDOT December 2006	CONT	SECT	JOB	HIGHWAY
REVISIONS REVISED MAY, 2013 (VP)	DIST	COUNTY		SHEET NO.
				120

DISCLAIMER:
The use of this standard is governed by the "Texas Engineering Practice Act". No warranty of any kind is made by TxDOT for any purpose whatsoever. TxDOT assumes no responsibility for the conversion of this standard to other formats or for incorrect results or damages resulting from its use.

DATE:
FILE:

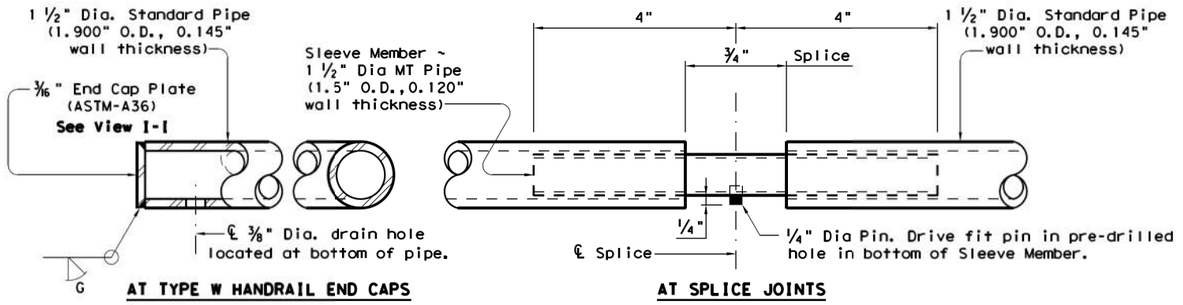

AT TYPE W HANDRAIL END CAPS

AT SPLICE JOINTS

HANDRAIL FABRICATION DETAILS

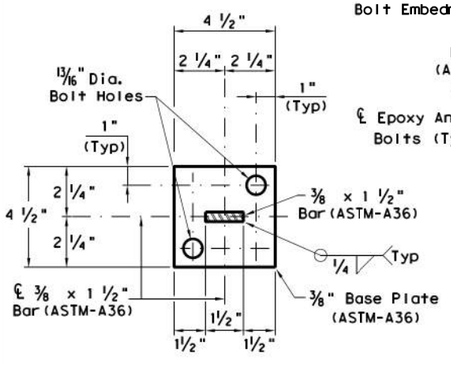

SECTION J-J
(Anchor Bolts not shown for clarity)

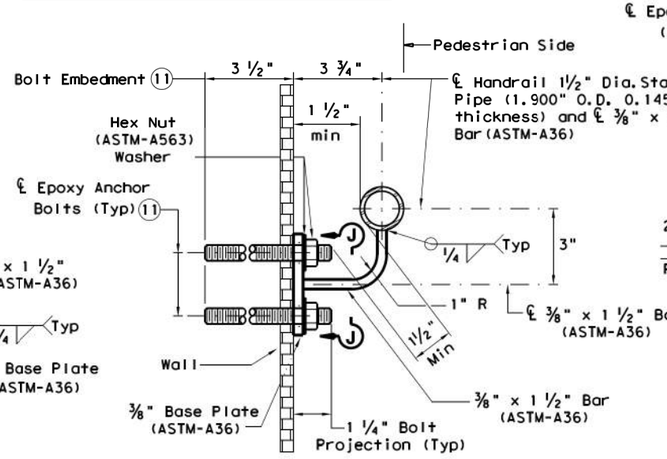

SECTION AT WALL MOUNT

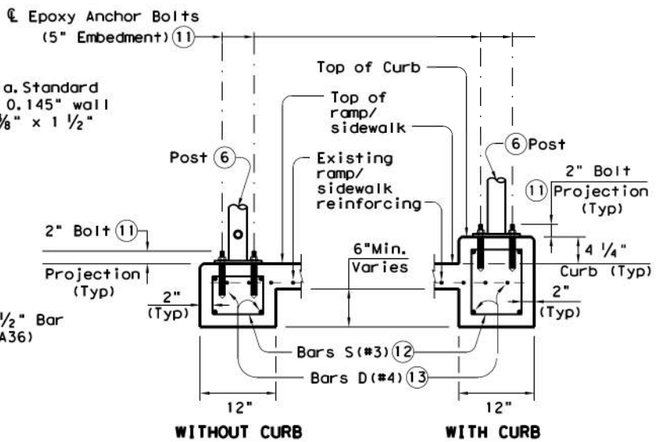

WITHOUT CURB

WITH CURB

SECTION AT RAIL POST FOUNDATIONS

TYPICAL WALL MOUNT DETAILS

(5) 1 ½" Dia. Standard Pipe (1.900" O.D., 0.145" wall thickness). Parallel to ramp/sidewalk. Provide holes as needed in 1 ½" Dia. pipe for galvanizing drainage and venting.

(6) 2 ½" Dia. Standard Pipe (2.875" O.D., 0.203" wall thickness). Plumb all posts. See "Post Mount Detail" for crimping and trimming post to fit the diamenter of top rail. Provide holes as needed in post for galvanizing drainage and venting.

(11) See "General Notes" for anchor bolt information.

(12) Bars S(#3) spaced at 12" Max (Spaced 3" from outside edge of overall length of Ramp/Sidewalk).

(13) Provide 1 ½" end cover to Bars D(#4) from outside edge of overall length of Ramp/Sidewalk.

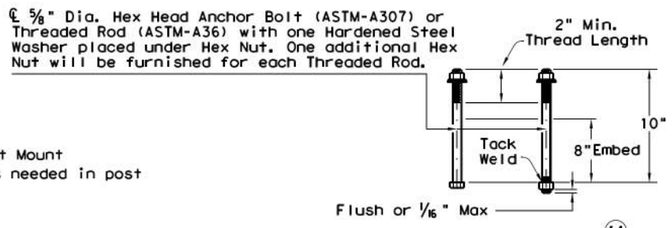

CAST-IN-PLACE ANCHOR BOLT OPTIONS
(Used for Post Base Plate only)

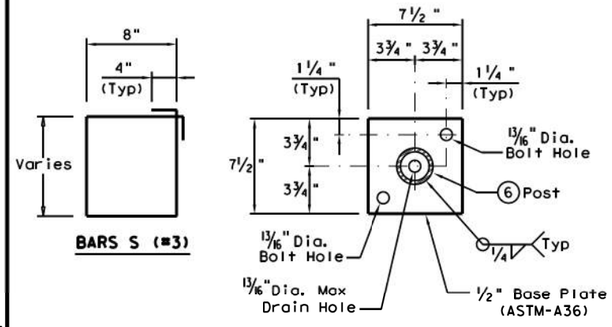

BARS S (#3)

TYPICAL POST BASE PLATE DETAIL

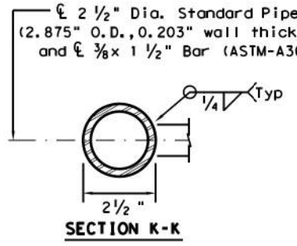

SECTION K-K

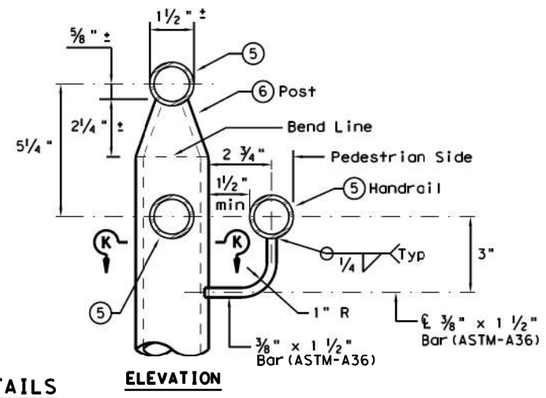

ELEVATION

POST MOUNT DETAILS

GENERAL NOTES

Designed according to ADAAG, Texas Accessibility Standards, Uniform Building Code, and AASHTO LRFD Specifications.

Handrail anchorage details shown on this standard may require modification for select structure types. See appropriate details elsewhere in plans for these modifications.

Pipe will conform to ASTM-A53 Grade B or A500 Grade B. Steel plates and steel bars will conform to ASTM-A36. Mechanical tubing (MT) will conform to ASTM A513 Grade 1015 or higher. Galvanize all steel components except reinforcing steel unless noted otherwise.

Concrete for foundations will be in accordance with Item 531 "Sidewalks". All reinforcing steel must be Grade 60. Bar laps, where required, will be as follows: Uncoated ~ #4 = 1'-5" Epoxy coated ~ #4 = 2'-1"

When the plans require painted steel, follow the requirements for painting galvanized steel in Item 446, "Cleaning and Painting Steel". Sleeve Members will receive galvanization and only get field painted after installation unless directed otherwise by Engineer.

Epoxy Anchor bolts for wall mount and post base plate will be ⅝" Dia. ASTM A36 threaded rods with one hex nut and one hardened steel washer at each bolt. ⅝" Dia. threaded rod embedment depth for wall mounts is 3 ½" and embedment depth for post base plate is 5".

Embed threaded rods into concrete with a Type III (Class C) epoxy meeting the requirements of DMS-6100, "Epoxies and Adhesives". Mix and dispense adhesive with the manufacturer's static mixing nozzle/dual cartridge system. Core drill holes (percussion drilling not permitted).

At the contractor's option the post base plate anchor bolts may be cast with the Ramp/Sidewalk (See Cast-in-Place Anchor Bolt Options).

Optional cast-in-place anchor bolts will be ⅝" Dia ASTM A307 Grade A bolts (or A36 threaded rods with one tack welded hex nut each) with one hex nut and one hardened steel washer at each bolt. Embedment depth of cast-in-place bolt will be 8" for post base plate.

Handrails and any wall or other surface adjacent to them will be free of any sharp or abrasive elements.

Submit shop drawings to the Engineer unless otherwise noted. For curved handrail applications, fabricate the handrail to the curve if radius is less than 600 ft. Shop drawings are required when rail is fabricated to the curve.

For all handrails, erection drawings will be submitted to the Engineer for approval to ensure proper installation.

Drawings will show handrail mount locations with bolts setting, spacing, ramp slope, and/or splice joint locations, and handrail lengths with identification showing where each handrail goes on the layout.

Payment for concrete sidewalks or curb ramps will be paid for in accordance with Item 531 "Sidewalks".

Payment for all items shown is to be included in unit price bid in accordance with Item 450 "Railing" of the type specified.

All exposed edges will be rounded or chamfered to approximately ⅛" by grinding.

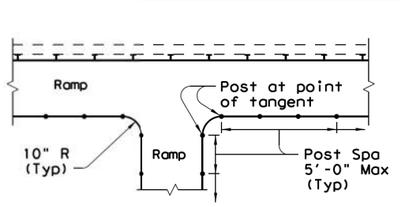

RAMP INTERSECTION

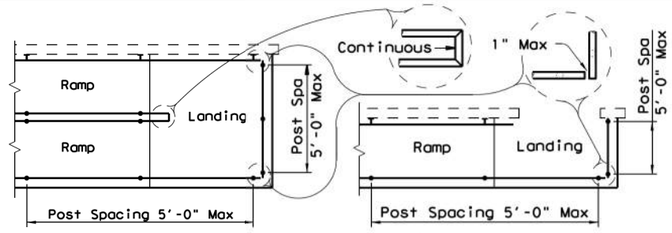

MULTI-LEVEL RAMP

SINGLE-LEVEL RAMP

PLAN SHOWING RAIL AT RAMP CONDITIONS

SHEET 3 OF 3

Texas Department of Transportation

Design Division Standard

PEDESTRIAN HANDRAIL DETAILS

PRD-13

FILE: prd13.dgn	DN: TxDOT	CK: AM	DW: JTR	CK: CGL
©TxDOT December 2006	CONT	SECT	JOB	HIGHWAY
REVISIONS REVISED MAY, 2013 (VP)				
	DIST	COUNTY		SHEET NO.
				121

DISCLAIMER:
THE USE OF THIS STANDARD IS GOVERNED BY THE "TEXAS ENGINEERING PRACTICE ACT". NO WARRANTY OF ANY KIND IS MADE BY TXDOT FOR ANY PURPOSE WHATSOEVER. TXDOT ASSUMES NO RESPONSIBILITY FOR THE CONVERSIONOF THIS STANDARD TO OTHER FORMATS OR FOR INCORRECT RESULTS OR DAMAGES RESULTING FROM ITS USE.

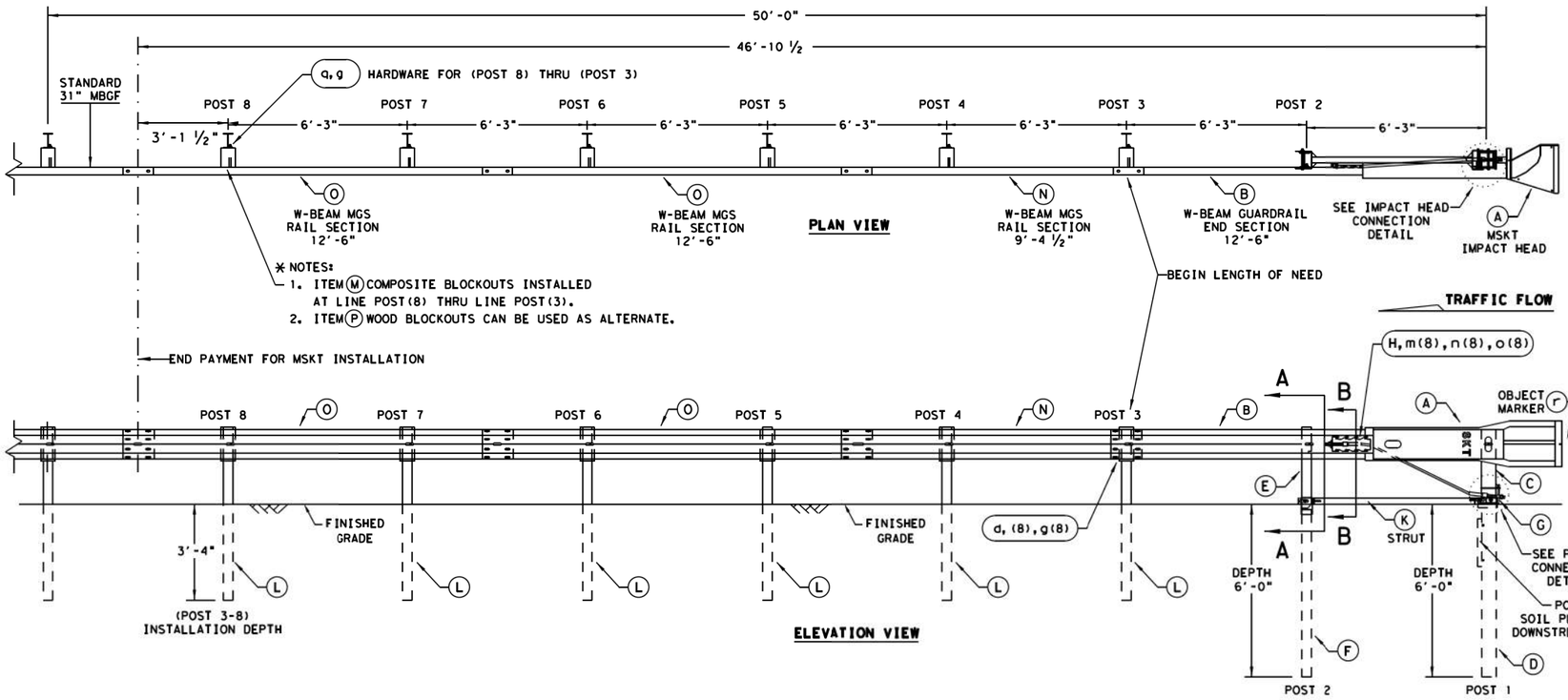

NOTE: SEE (GENERAL NOTE 14) FOR DRIVING CAP INFORMATION.

GENERAL NOTES

1. FOR SPECIFIC INFORMATION REGARDING INSTALLATION AND TECHNICAL GUIDANCE OF THE SYSTEM, CONTACT: ROAD SYSTEMS, INC. (432)263-2435. 3616 OLD HOWARD COUNTY AIRPORT, BIG SPRING, TX 79720
2. FOR INSTALLATION, REPAIR AND MAINTENANCE REFER TO THE: MSKT END TERMINAL, PRODUCT DESCRIPTION ASSEMBLY MANUAL (PUBLICATION-062717).
3. APPLY HIGH INTENSITY REFLECTIVE SHEETING, "OBJECT MARKER" ON THE FRONT FACE OF THE DEVICE PER MANUFACTURER'S RECOMMENDATIONS. OBJECT MARKER SHALL CONFORM TO THE STANDARDS REQUIRED IN TEXAS MUTCD.
4. FOR POST (LEAVE-OUT) INSTALLATION AND GUIDANCE SEE TXDOT'S LATEST ROADWAY MOW STRIP STANDARD.
5. HARDWARE (BOLTS, NUTS, & WASHERS) SHALL BE GALVANIZED IN ACCORDANCE WITH ITEM 445, "GALVANIZING". FITTINGS SHALL BE SUBSIDIARY TO THE BID ITEM.
6. SYSTEM SHOWN USING STEEL WIDE FLANGE POSTS WITH COMPOSITE BLOCKOUTS.
7. A COMPOSITE MATERIAL BLOCKOUTS THAT MEETS THE REQUIREMENTS OF DMS-7210, MAY BE SUBSTITUTED FOR BLOCKOUTS OF SIMILAR DIMENSIONS. SEE CONSTRUCTION DIVISION MATERIAL PRODUCER LIST (MPL) FOR CERTIFIED PRODUCERS.
8. IF SOLID ROCK IS ENCOUNTERED IN THE AREA OF (POST 1) AND / OR (POST 2) CONTACT THE MANUFACTURER, & REFER TO THE LATEST ROADWAY MBGF STANDARD FOR INSTALLATION GUIDANCE.
9. POSTS SHALL NOT BE SET IN CONCRETE.
10. SYSTEM MUST BE ATTACHED TO STANDARD 31" MBGF.
11. UNDER NO CIRCUMSTANCES SHALL THE GUARDRAIL WITHIN THE MSKT SYSTEM BE CURVED.
12. A FLARE RATE OF UP TO 25:1 MAY BE USED TO PREVENT THE TERMINAL HEAD FROM ENCROACHING ON THE SHOULDER. THE FLARE MAY BE DECREASED OR ELIMINATED FOR SPECIFIC INSTALLATIONS, IF DIRECTED BY THE ENGINEER.
13. THE SYSTEM IS SHOWN WITH TWO 12'-6" MBGF PANELS, ONE 25'-0" MBGF PANEL IS ALSO ALLOWED IN THEIR PLACE.
14. A DRIVING CAP WITH A TIMBER OR PLASTIC INSERT SHALL BE USED WHEN DRIVING POSTS 3-8 TO PREVENT DAMAGE TO THE GALVANIZING ON TOP OF THE POST. SPECIAL DRIVING CAP TO BE USED ON LOWER POSTS 1 & 2 TO PREVENT DAMAGE TO THE WELDED PLATES.

ITEM	QTY	MAIN SYSTEM COMPONENTS	ITEM NUMBERS
A	1	MSKT IMPACT HEAD	MS3000
B	1	W-BEAM GUARDRAIL END SECTION, 12 Ga.	SF1303
C	1	POST 1 - TOP (6" X 6" X ⅛" TUBE)	MTPHP1A
D	1	POST 1 - BOTTOM (6' W6X15)	MTPHP1B
E	1	POST 2 - ASSEMBLY TOP	UHP2A
F	1	POST 2 - ASSEMBLY BOTTOM (6' W6X9)	HP2B
G	1	BEARING PLATE	E750
H	1	CABLE ANCHOR BOX	S760
J	1	BCT CABLE ANCHOR ASSEMBLY	E770
K	1	GROUND STRUT	MS785
L	6	W6x9 OR W6x8.5 STEEL POST	P621
M	6	COMPOSITE BLOCKOUTS	CBSP-14
N	1	W-BEAM MGS RAIL SECTION (9'-4 ½")	G12025
O	2	W-BEAM MGS RAIL SECTION (12'-6")	G1203A
P	6	WOOD BLOCKOUT 6" X 8" X 14"	P675
Q	1	W-BEAM MGS RAIL SECTION (25'-0")	G1209
		SMALL HARDWARE	
a	2	⅝" x 1" HEX BOLT (GRD 5)	B5160104A
b	4	⅝" WASHER	W0516
c	2	⅝" HEX NUT	N0516
d	25	⅝" Dia. x 1 ¼" SPLICE BOLT (POST 2)	B580122
e	2	⅝" Dia. x 9" HEX BOLT (GRD A449)	B580904A
f	3	⅝" WASHER	W050
g	33	⅝" Dia. H.G.R NUT	N050
h	1	¾" Dia. x 8 ½" HEX BOLT (GRD A449)	B340854A
j	1	¾" Dia. HEX NUT	N030
k	2	1 ANCHOR CABLE HEX NUT	N100
l	2	1 ANCHOR CABLE WASHER	W100
m	8	½" x 1 ¼" A325 BOLT WITH CAPTIVE WASHER	SB12A
n	8	½" STRUCTURAL NUTS	N012A
o	8	1 ⅛" O.D. x ⅜" I.D. STRUCTURAL WASHERS	W012A
p	1	BEARING PLATE RETAINER TIE	CT-100ST
q	6	⅝" x 10" H.G.R. BOLT	B581002
r	1	OBJECT MARKER 18" X 18"	E3151

SEE NOTES: *

ALTERNATIVE ITEMS NOT SHOWN. * *
* ITEM(P) 8" WOOD-BLOCKOUT
* * ITEM(Q) 25'GUARD FENCE PANEL

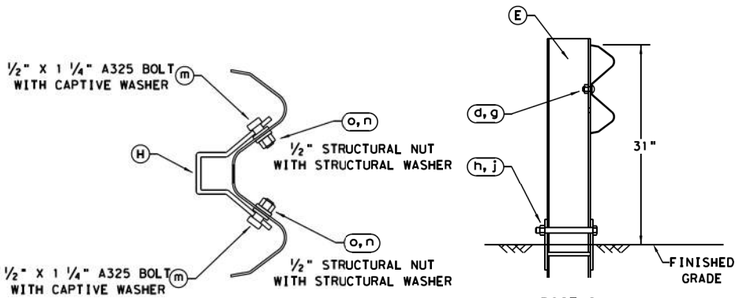

SECTION B-B
ANCHOR BRACKET

POST 2
SECTION A-A

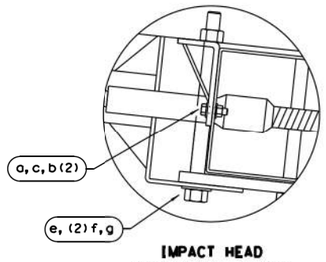

IMPACT HEAD
CONNECTION DETAIL

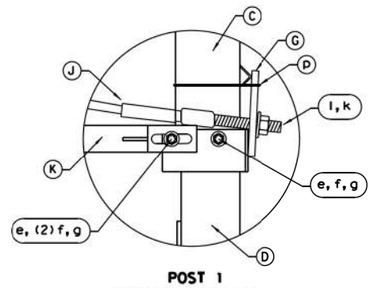

POST 1
CONNECTION DETAIL

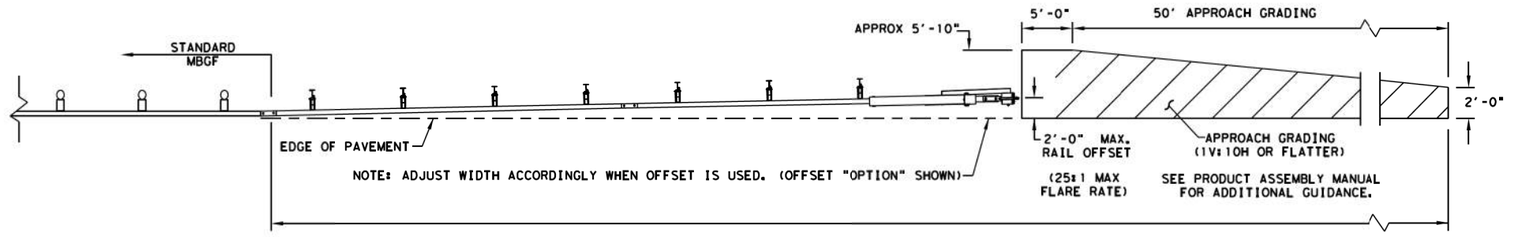

APPROACH GRADING AT GUARDRAIL END TREATMENTS

TRAFFIC FLOW

NOTE: TXDOT GENERIC APPROACH GRADING LAYOUT USED FOR ALL TANGENT TYPE END TREATMENTS.

NOTE: THIS STANDARD IS A BASIC REPRESENTATION OF THE MSKT END TERMINAL, IT IS NOT INTENDED TO REPLACE THE PRODUCT DESCRIPTION ASSEMBLY MANUAL.

Texas Department of Transportation

Design Division Standard

SINGLE GUARDRAIL TERMINAL
MSKT-MASH-TL-3
SGT(12S)31-18

FILE: sgt12s3118.dgn	DN: TxDOT	CK: KM	DW: VP	CK: CL	
© TxDOT: APRIL 2018	CONT	SECT	JOB	HIGHWAY	
REVISIONS					
	DIST	COUNTY		SHEET NO.	
				122	

DATE:
FILE:

DISCLAIMER:
The use of this standard is governed by the "Texas Engineering Practice Act". No warranty of any kind is made by TxDOT for any purpose whatsoever. TxDOT assumes no responsibility for the conversion of this standard to other formats or for incorrect results or damages resulting from its use.

DATE:
FILE:

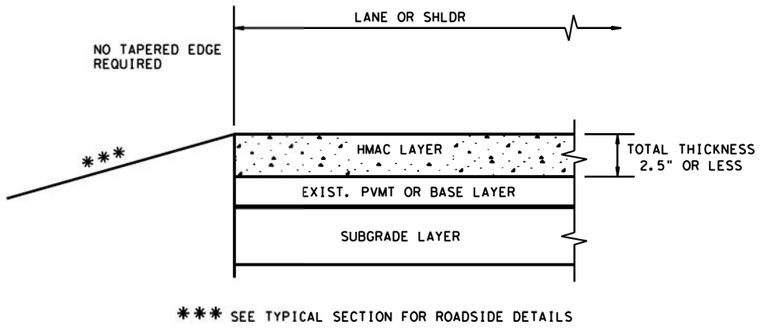

*** SEE TYPICAL SECTION FOR ROADSIDE DETAILS

CONDITION - 1
THIN HMAC SURFACES OR HMAC OVERLAY WITH THICKNESS OF 2.5" OR LESS

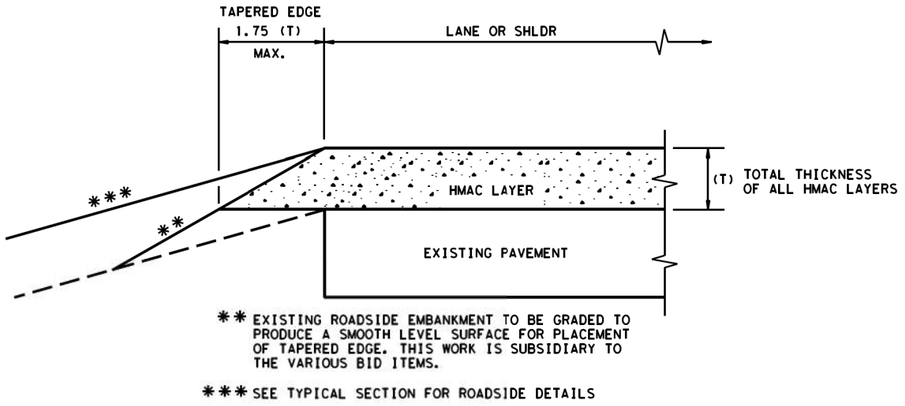

** EXISTING ROADSIDE EMBANKMENT TO BE GRADED TO PRODUCE A SMOOTH LEVEL SURFACE FOR PLACEMENT OF TAPERED EDGE. THIS WORK IS SUBSIDIARY TO THE VARIOUS BID ITEMS.

*** SEE TYPICAL SECTION FOR ROADSIDE DETAILS

CONDITION - 2
OVERLAY OF EXISTING PAVEMENT HMAC THICKNESS 2.5" TO 5"

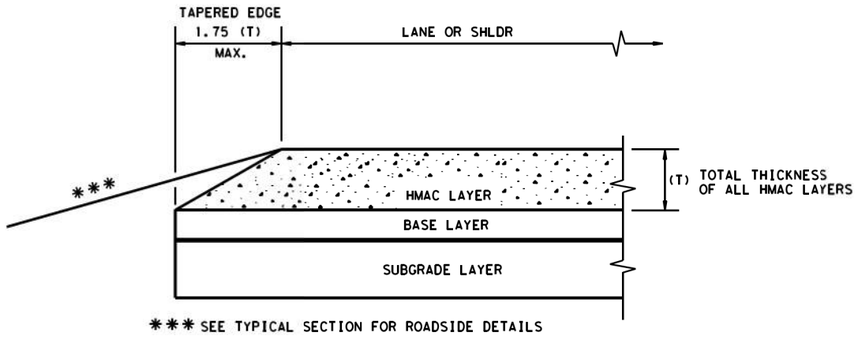

*** SEE TYPICAL SECTION FOR ROADSIDE DETAILS

CONDITION - 3
NEW OR RECONSTRUCTED PAVEMENT HMAC THICKNESS 2.5" TO 5"

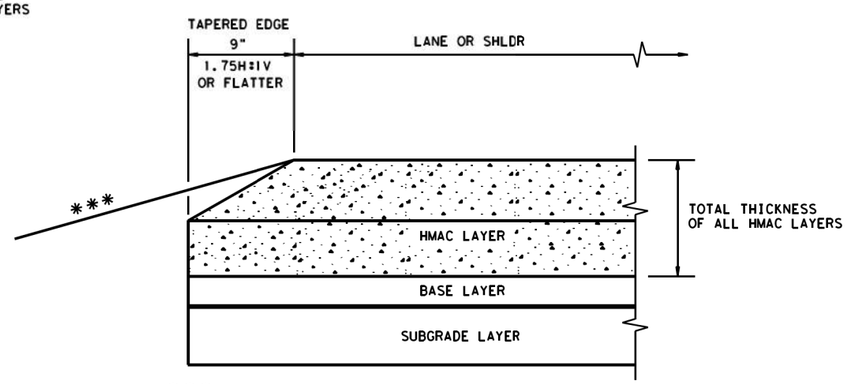

*** SEE TYPICAL SECTION FOR ROADSIDE DETAILS

CONDITION - 4
NEW OR RECONSTRUCTED PAVEMENT HMAC THICKNESS 5" OR GREATER

(NOT TO SCALE)

GENERAL NOTES

1. UNLESS OTHERWISE SHOWN IN THE PLANS, A VERTICAL EDGE IS PERMISSIBLE FOR HMAC PLACED GREATER THAN 5" BELOW THE EDGE OF PAVEMENT AND FOR THICKNESS OF HMAC LESS THAN 2.5".
2. FOR FURTHER INFORMATION REGARDING THE ROADSIDE AND PAVEMENT DETAILS, SEE TYPICAL SECTIONS.
3. PAYMENT FOR TAPERED EDGE WILL BE IN ACCORDANCE WITH APPLICABLE ITEMS IN THE CONTRACT.
4. THE SLOPE OF THE TAPERED EDGE SHALL BE 1.75H:1V OR FLATTER.
5. THE TAPERED EDGE SHALL BE PRODUCED BY USE OF A SCREED ATTACHMENT CAPABLE OF PRODUCING A SMOOTH COMPACTED SURFACE. ADDITIONAL COMPACTING EFFORT BEHIND THE SCREED IS NOT REQUIRED.

Texas Department of Transportation

Design Division Standard

TAPERED EDGE DETAILS HMAC PAVEMENT

TE(HMAC)-11

FILE: tehmac11.dgn	DN: TxDOT	CK: RL	DW: KB	CK:
©TxDOT January 2011	CONT	SECT	JOB	HIGHWAY
REVISIONS				
	DIST	COUNTY		SHEET NO.
				123

DISCLAIMER: The use of this standard is governed by the "Texas Engineering Practice Act". No warranty of any kind is made by TxDOT for any purpose whatsoever. TxDOT assumes no responsibility for the conversion of this standard to other formats or for incorrect results or damages resulting from its use.

DATE:
FILE:

DEFINITION OF TREATMENT ZONES FOR VARIOUS EDGE CONDITIONS

Edge Height (D) in Inches versus Lateral Clearance (Y) in Feet

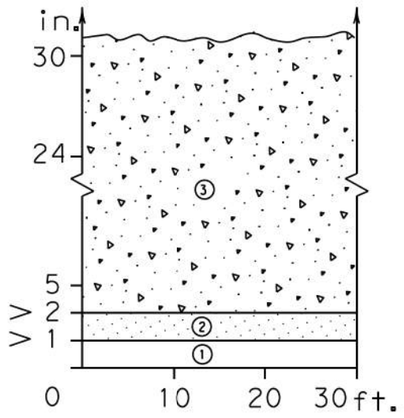

Edge Condition I
S = (3:1) (or flatter)

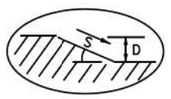

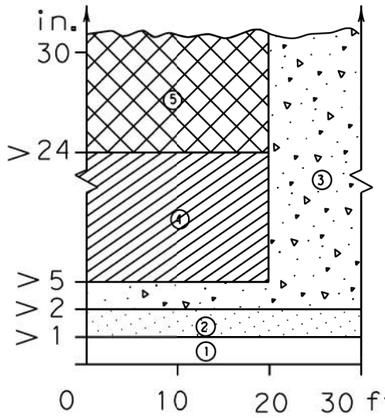

Edge Condition II
S = ((2.99):1) to (1:1)

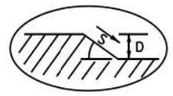

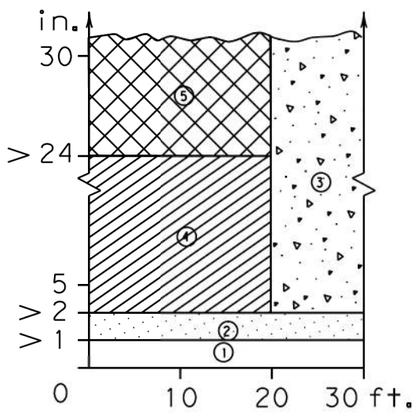

Edge Condition III
S is steeper than (1:1)

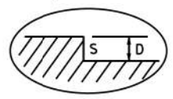

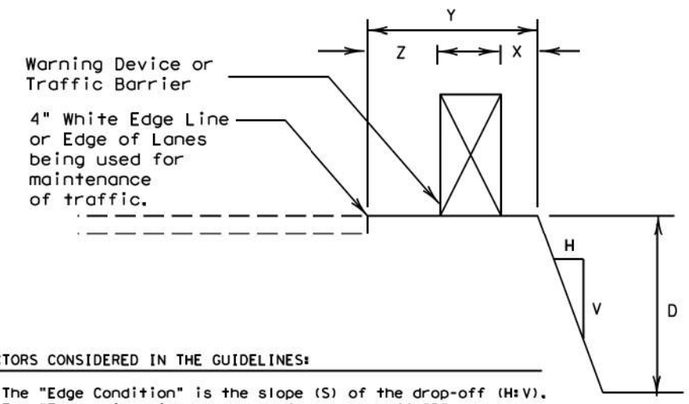

FACTORS CONSIDERED IN THE GUIDELINES:

1. The "Edge Condition" is the slope (S) of the drop-off (H:V). The "Edge Height is the depth of the drop-off "D".

2. Distance "X" is to be the maximum practical under job conditions. Two feet minimum for high speed conditions. Distance "Y" is the lateral clearance from edge of travel lane to edge of dropoff. Distance "Z" does not have a minimum.

3. In addition to the factors considered in the guidelines, each construction zone drop-off situation should be analyzed individually, taking into account other variables, such as: traffic mix, posted speed in the construction zone, horizontal curvature, and the practicality of the treatment options.

4. The conditions for indicating the use of positive or protective barriers are given by Zone-5 and Figure-1. Traffic barriers are primarily applicable for high speed conditions. Urban areas with speeds of 30 mph or less may have a lesser need for signing, delineation, and barriers. Right-angled edges, however, with "D" greater than 2 inches and located within a lateral offset of 6 feet, may indicate a higher level of treatment.

5. If the distance "Y" must be less than 3 feet, the use of a positive barrier may not be feasible. In such a case, consider either: 1) narrowing the lanes to a desired 11 to 12 feet or 10 foot minimum (see CW20-8 sign), or 2) provide an edge slope such as Edge Condition I.

Zone	Treatment Types Guidelines:
①	No treatment.
②	CW 8-11 "Uneven Lanes" signs.
③	CW 8-9a "Shoulder Drop-Off" or CW 8-11 signs plus vertical panels.
④	CW 8-9a or CW 8-11, signs plus drums. Where restricted space precludes the use of drums, use vertical panels. An edge fill may be provided to change the edge slope to that of the preferable Edge Condition I.
⑤	Check indications (Figure-1) for positive barrier. Where positive barrier is not indicated, the treatment shown above for Zone- 4 may be used after consideration of other applicable factors.

Edge Condition Notes:

1. Edge Condition I: Most vehicles are able to traverse an edge condition with a slope rate of (3 to 1) or flatter. The slope must be constructed with a compacted material capable of supporting vehicles.

2. Edge Condition II: Most vehicles are able to traverse an edge condition with a slope between (2.99 to 1) and (1to 1) so long as "D" does not exceed 5 inches. Under-carriage drag on most automobiles will occur when "D" exceeds 6 inches. As "D" exeeds 24 inches, the possibility for rollover is greater in most vehicles.

3. Edge Condition III: When slopes are greater than (1 to 1) and where "D" is greater than 2 inches, a more difficult control factor may exist for some vehicles, if not properly treated. For example, where "D" is greater than 2 inches and up to 24 inches different types of vehicles may experience different steering control at different edge heights. Automobiles might experience more steering control differential when "D" is greater than 2 inches and up to 5 inches. Trucks, particularly those with high loads, have more steering control differential when "D" is greater than 5 inches and up to 24 inches. When "D" exceeds 24 inches, the possibility of rollover is greater for most vehicles.

4. Milling or overlay operations that result in Edge Condition III should not be in place without appropriate warning treatments, and these conditions should not be left in place for extended periods of time.

FIGURE-1: CONDITIONS INDICATING USE OF POSITIVE BARRIER FOR ZONE 5 (▨)

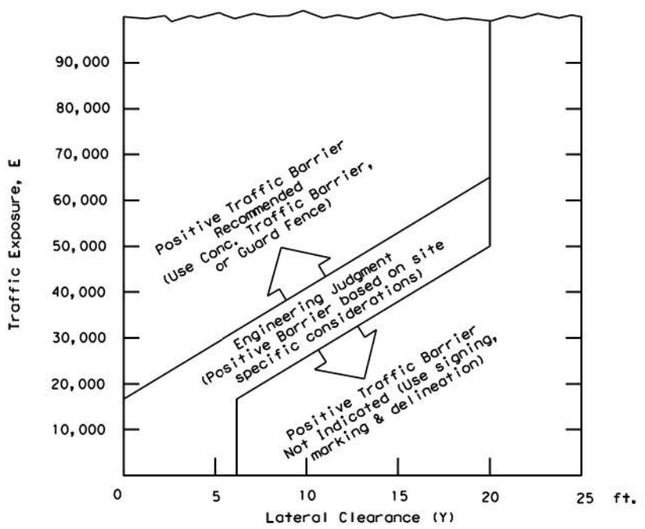

1 E = ADT x T
Where ADT is that portion of the average daily traffic volume traveling within 20 feet (generally two adjacent lanes) of the edge dropoff condition; and, T is the duration time in years of the dropoff condition.

2 Figure-1 provides a practical approach to the use of positive barriers for the protection of vehicles from pavement drop-offs. Other factors, such as the presence of heavy machinery, construction workers, or the mix and volume of traffic may make the use of positive barriers appropriate, even when the edge condition alone may not justify the use of a barrier.

3 An approved end treatment should be provided for any positive barrier end located within a lateral offset of 20 feet from the edge of the travel lane.

These guidelines apply to temporary traffic control areas or work zones where continuous pavement edges or drop-offs exists parallel and adjacent to a lane used by traffic. The edge conditions may be present between shoulders and travel lanes, between adjacent or opposing travel lanes, or at intermediate points across the width of the paved surface. Due to the variability in construction operations, tolerances in the variables may be allowed by the engineer. These guidelines do not apply to short term operations. These guidelines do not constitute a rigid standard or policy; rather, they are guidance to be used in conjunction with engineering judgement. These guidelines may be updated on the Design Division's on-line manuals.

Engineer's Seal

Date _____

_____

Texas Department of Transportation
Traffic Operations Division

TREATMENT FOR VARIOUS EDGE CONDITIONS

©TxDOT August 2000

DN: TXDOT	CK: TXDOT	DW: TXDOT	CK: TXDOT
CONT	SECT	JOB	HIGHWAY
DIST	COUNTY		SHEET NO.
			124

REVISIONS
03-01
08-01 correct typos

SUMMARY OF RETAINING WALL QUANTITIES

ITEM	423	427	432	450
BID CODE	6001	6002	6046	6036
DESCRIPTION	RETAINING WALL (MSE)	CONCRETE PAINT FINISH	RIPRAP (MOW STRIP) (5 IN)	RAIL (TY C411)
UNIT	SF	SF	CY	LF
BRUSHY CREEK				
MSE WALL 1	1,185	2,640	4.1	180.7
MSE WALL 2	1,452	2,780	5.3	163.3
MSE WALL 3	762	860	2.9	
MSE WALL 4	1,512	3,150	6.4	202.4
MSE WALL 5	2,055	3,600	6.1	191.0
MSE WALL 6	943	1,040	2.9	
MSE WALL 7	2,737	4,340	6.4	197.9
TOTAL	10,646	18,410	34.1	935.3

WYOMING SPRINGS
SEGMENT 1
ROUND ROCK, TX

ROUND ROCK, TEXAS

AGUIRRE & FIELDS
ENGINEERING INNOVATORS
TBPE FIRM REGISTRATION # 739

Revision		
No.	Date	Description

4/17/2023

STATE OF TEXAS
MACK DAVIS
119955
LICENSED
PROFESSIONAL ENGINEER

100% SUBMITTAL

Project No.:	36179
Issued:	4/17/2023
Drawn By:	QBH
Checked By:	CMD
Scale:	

Sheet Title
MSE WALL
ESTIMATED QUANTITIES
AT BRUSHY CREEK

125
Sheet Number

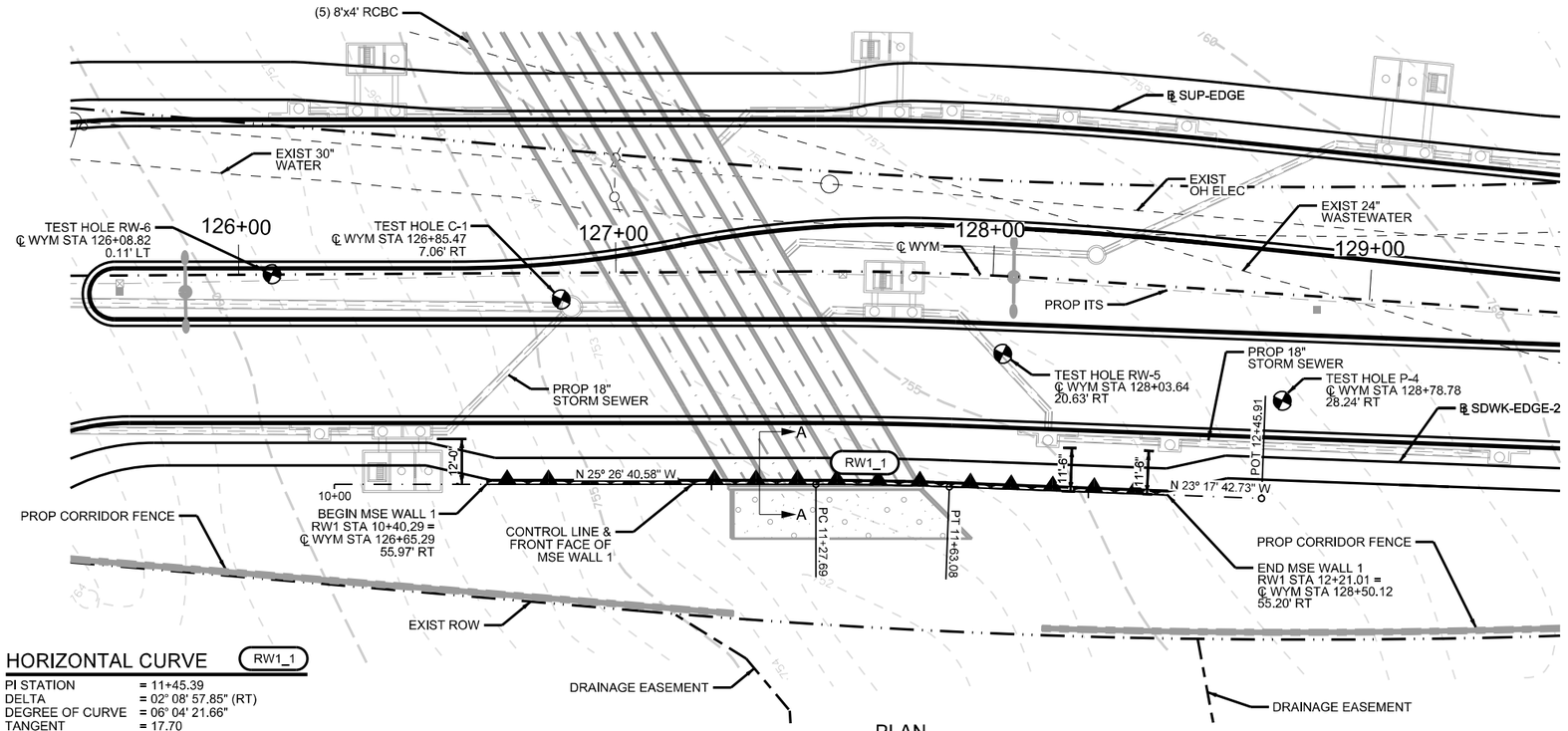

PLAN

HORIZONTAL CURVE (RW1_1)

PI STATION	= 11+45.39
DELTA	= 02° 08' 57.85" (RT)
DEGREE OF CURVE	= 06° 04' 21.66"
TANGENT	= 17.70
LENGTH	= 35.39
RADIUS	= 943.50
PC STATION	= 11+27.69
PT STATION	= 11+63.08

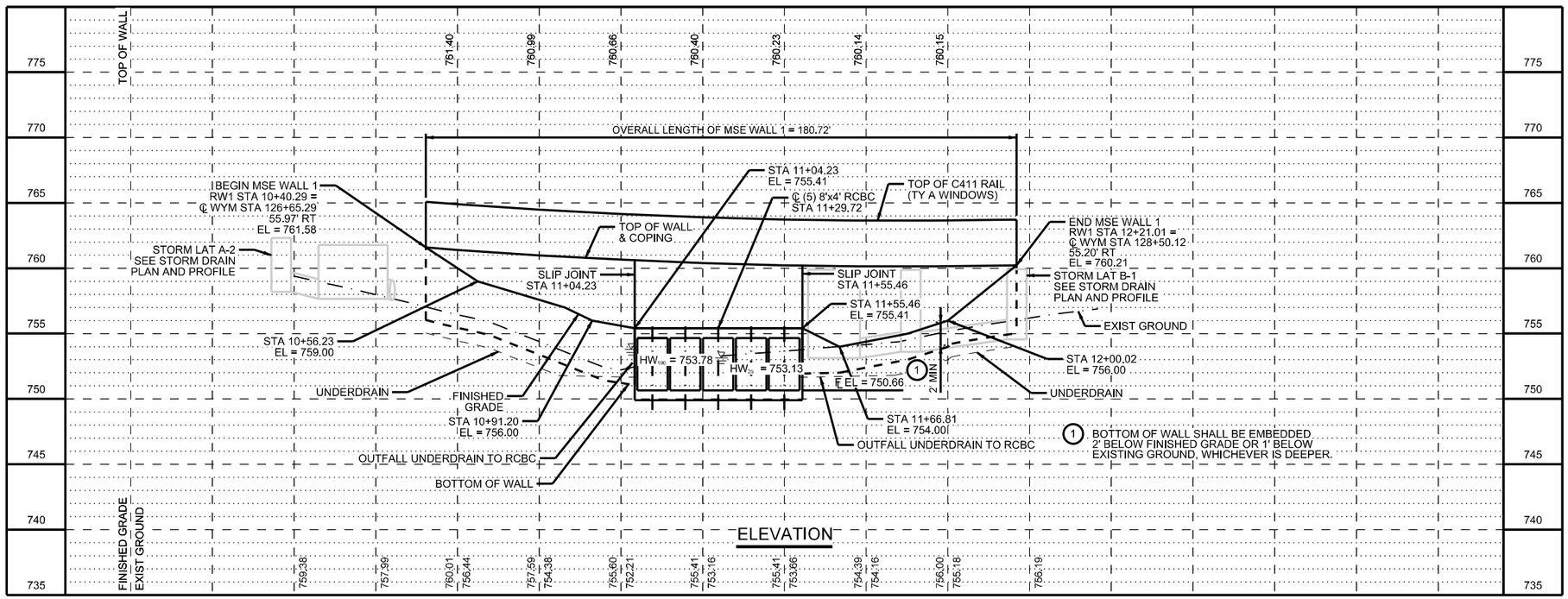

ELEVATION

GENERAL NOTES:

1. WALL SHALL BE CONSTRUCTED PER 2014 STANDARD SPECIFICATIONS FOR CONSTRUCTION AND MAINTENANCE OF HIGHWAYS, STREETS, AND BRIDGES AS ADOPTED BY THE TEXAS DEPARTMENT OF TRANSPORTATATION.
2. ALL STATIONING AND OFFSETS ARE MEASURED ALONG WALL CONTROL LINE UNLESS NOTED OTHERWISE.
3. SEE MSE WALL TYPICAL SECTIONS SHEETS FOR WALL SECTION VIEWS.
4. WALL MAY BE SUBJECT TO INUNDATION. USE TXDOT ITEM 423 TYPE DS SELECT BACKFILL.
5. SEE STANDARD RW(MSE)DD FOR MINIMUM STRAP LENGTH, WALL SOIL PARAMETERS, AND OTHER WALL DESIGN INFORMATION.
6. SEE STANDARDS RW(MSE)(MOD), RW(EM), AND RW(TRF) FOR ADDITIONAL WALL DETAILS.
7. SEE MSE WALL BORING LOGS SHEETS FOR SOIL BORING INFORMATION.
8. SEE AESTHETIC DETAILS SHEETS FOR RETAINING WALL AND RAIL AESTHETIC INFORMATION.
9. CONTRACTOR SHALL FIELD VERIFY LOCATIONS AND DEPTHS OF ALL UTILITIES PRIOR TO CONSTRUCTION, AND IF NECESSARY, NOTIFY ENGINEER OF ANY CONFLICTS.
10. CONTRACTOR SHALL PROVIDE POSITIVE DRAINAGE AWAY FROM WALL AT ALL TIMES (DURING AND POST CONSTRUCTION).
11. SEE DRAINAGE PLANS FOR EXISTING AND PROPOSED DRAINAGE INFORMATION.
12. SELECT RETAINED FILL BETWEEN THE REINFORCED ZONE AND CONSTRUCTION BACKSLOPE SHALL BE TYPE A GRANULAR FILL IN ACCORDANCE WITH TXDOT ITEM 132.

0 20 40 60 80

SCALE: 1"=40' H
1"=10' V

WYOMING SPRINGS
SEGMENT 1
ROUND ROCK, TX

ROUND ROCK, TEXAS

AGUIRRE & FIELDS
ENGINEERING INNOVATORS
TBPE FIRM REGISTRATION # 739

Revision No.	Date	Description

4/17/2023

STATE OF TEXAS
MACK DAVIS
119955
LICENSED PROFESSIONAL ENGINEER

100% SUBMITTAL

Project No.:	36179
Issued:	4/6/2023
Drawn By:	QBH
Checked By:	CMD
Scale:	

Sheet Title

MSE WALL 1 LAYOUT

126
Sheet Number

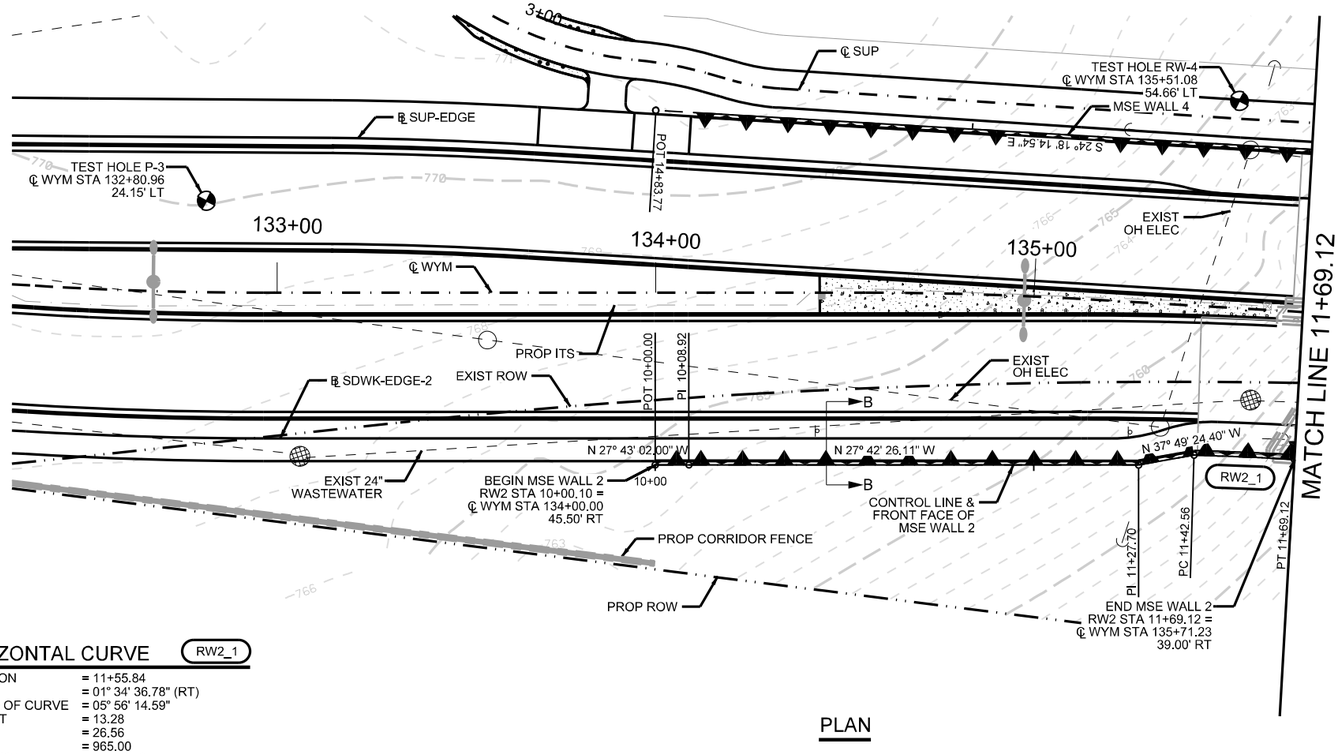

PLAN

HORIZONTAL CURVE (RW2_1)

PI STATION	= 11+55.84
DELTA	= 01° 34' 36.78" (RT)
DEGREE OF CURVE	= 05° 56' 14.59"
TANGENT	= 13.28
LENGTH	= 26.56
RADIUS	= 965.00
PC STATION	= 11+42.56
PT STATION	= 11+69.12

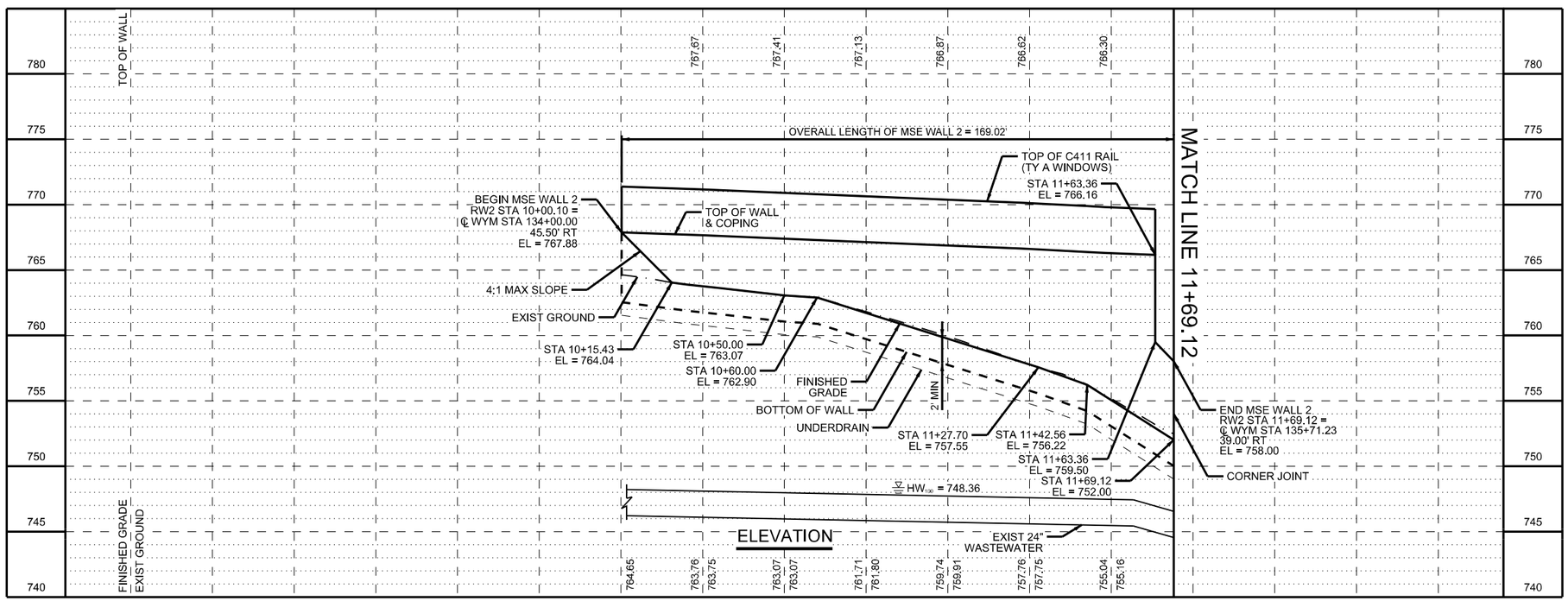

ELEVATION

GENERAL NOTES:

1. WALL SHALL BE CONSTRUCTED PER 2014 STANDARD SPECIFICATIONS FOR CONSTRUCTION AND MAINTENANCE OF HIGHWAYS, STREETS, AND BRIDGES AS ADOPTED BY THE TEXAS DEPARTMENT OF TRANSPORTATATION.
2. ALL STATIONING AND OFFSETS ARE MEASURED ALONG WALL CONTROL LINE UNLESS NOTED OTHERWISE.
3. SEE MSE WALL TYPICAL SECTIONS SHEETS FOR WALL SECTION VIEWS.
4. WALL MAY BE SUBJECT TO INUNDATION. USE TXDOT ITEM 423 TYPE DS SELECT BACKFILL.
5. SEE STANDARD RW(MSE)DD FOR MINIMUM STRAP LENGTH, WALL SOIL PARAMETERS, AND OTHER WALL DESIGN INFORMATION.
6. SEE STANDARDS RW(MSE)(MOD), RW(EM), AND RW(TRF) FOR ADDITIONAL WALL DETAILS.
7. SEE MSE WALL BORING LOGS SHEETS FOR SOIL BORING INFORMATION.
8. SEE AESTHETIC DETAILS SHEETS FOR RETAINING WALL AND RAIL AESTHETIC INFORMATION.
9. CONTRACTOR SHALL FIELD VERIFY LOCATIONS AND DEPTHS OF ALL UTILITIES PRIOR TO CONSTRUCTION, AND IF NECESSARY, NOTIFY ENGINEER OF ANY CONFLICTS.
10. CONTRACTOR SHALL PROVIDE POSITIVE DRAINAGE AWAY FROM WALL AT ALL TIMES (DURING AND POST CONSTRUCTION).
11. SEE DRAINAGE PLANS FOR EXISTING AND PROPOSED DRAINAGE INFORMATION.
12. SELECT RETAINED FILL BETWEEN THE REINFORCED ZONE AND CONSTRUCTION BACKSLOPE SHALL BE TYPE A GRANULAR FILL IN ACCORDANCE WITH TXDOT ITEM 132.

0 20 40 60 80

SCALE: 1"=40' H
1"=10' V

WYOMING SPRINGS
SEGMENT 1
ROUND ROCK, TX

AGUIRRE & FIELDS
ENGINEERING INNOVATORS
TBPE FIRM REGISTRATION # 739

Revision No.	Date	Description

4/20/2023
STATE OF TEXAS
MACK DAVIS
119955
LICENSED
PROFESSIONAL ENGINEER

100% SUBMITTAL

Project No.:	36179
Issued:	4/20/2023
Drawn By:	QBH
Checked By:	CMD
Scale:	

Sheet Title
MSE WALL 2 LAYOUT

127
Sheet Number

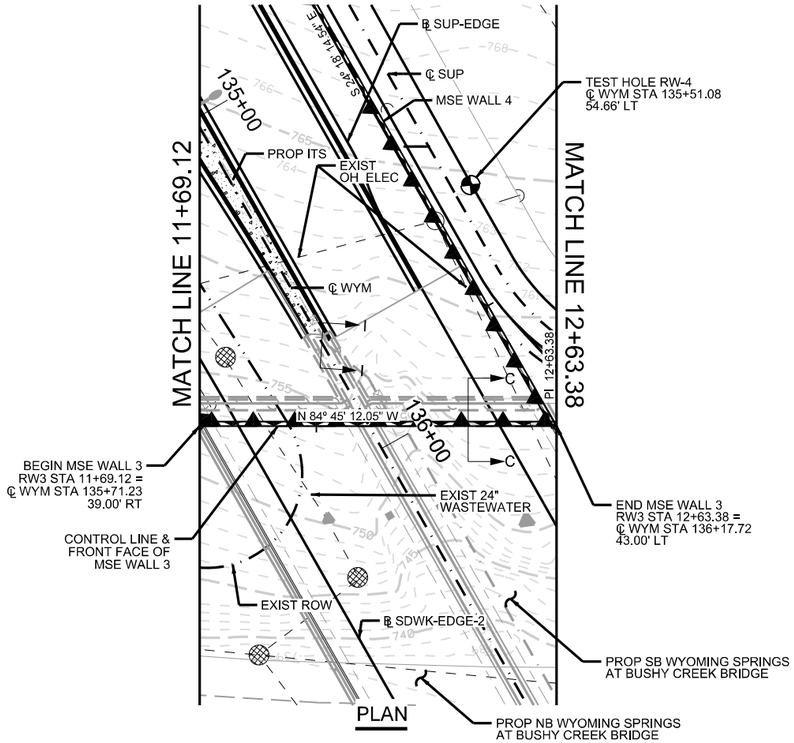

PLAN

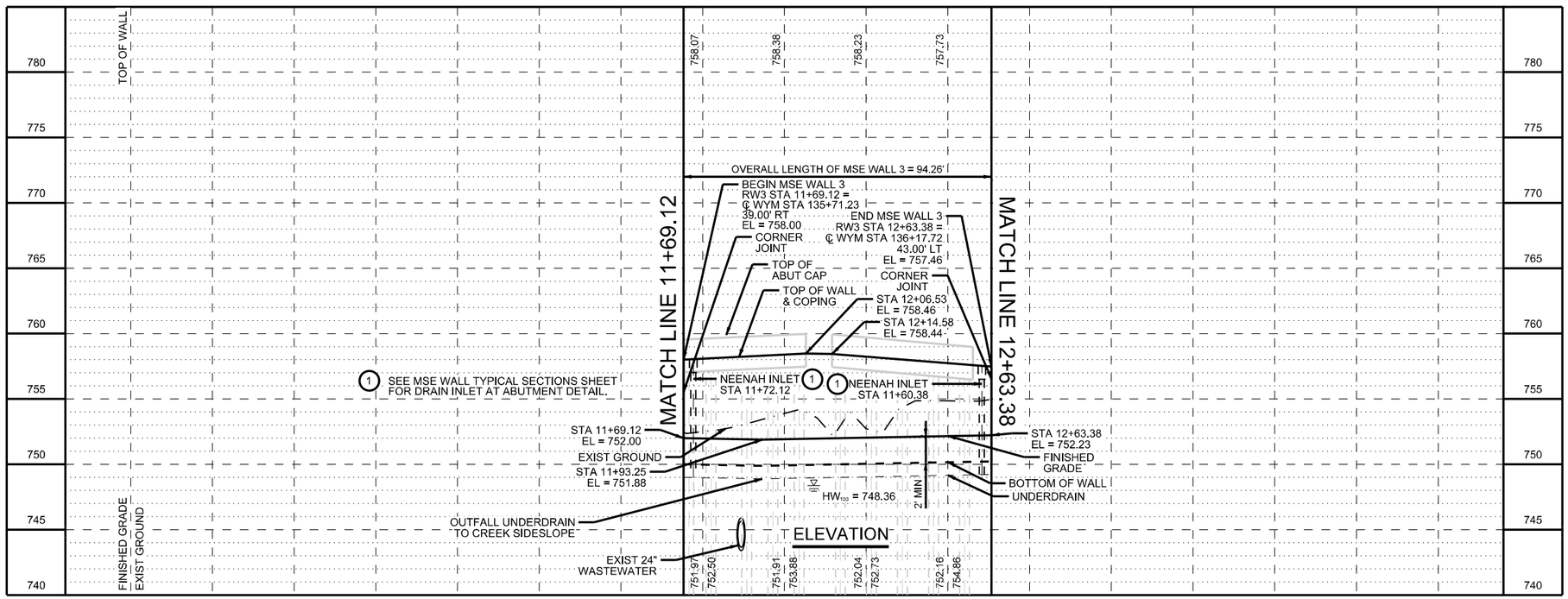

ELEVATION

12+00

GENERAL NOTES:

1. WALL SHALL BE CONSTRUCTED PER 2014 STANDARD SPECIFICATIONS FOR CONSTRUCTION AND MAINTENANCE OF HIGHWAYS, STREETS, AND BRIDGES AS ADOPTED BY THE TEXAS DEPARTMENT OF TRANSPORTATATION.
2. ALL STATIONING AND OFFSETS ARE MEASURED ALONG WALL CONTROL LINE UNLESS NOTED OTHERWISE.
3. SEE MSE WALL TYPICAL SECTIONS SHEETS FOR WALL SECTION VIEWS.
4. WALL MAY BE SUBJECT TO INUNDATION. USE TXDOT ITEM 423 TYPE DS SELECT BACKFILL.
5. SEE STANDARD RW(MSE)DD FOR MINIMUM STRAP LENGTH, WALL SOIL PARAMETERS, AND OTHER WALL DESIGN INFORMATION.
6. SEE STANDARDS RW(MSE)(MOD), RW(EM), AND RW(TRF) FOR ADDITIONAL WALL DETAILS.
7. SEE MSE WALL BORING LOGS SHEETS FOR SOIL BORING INFORMATION.
8. SEE AESTHETIC DETAILS SHEETS FOR RETAINING WALL AND RAIL AESTHETIC INFORMATION.
9. CONTRACTOR SHALL FIELD VERIFY LOCATIONS AND DEPTHS OF ALL UTILITIES PRIOR TO CONSTRUCTION, AND IF NECESSARY, NOTIFY ENGINEER OF ANY CONFLICTS.
10. CONTRACTOR SHALL PROVIDE POSITIVE DRAINAGE AWAY FROM WALL AT ALL TIMES (DURING AND POST CONSTRUCTION).
11. SEE DRAINAGE PLANS FOR EXISTING AND PROPOSED DRAINAGE INFORMATION.
12. SELECT RETAINED FILL BETWEEN THE REINFORCED ZONE AND CONSTRUCTION BACKSLOPE SHALL BE TYPE A GRANULAR FILL IN ACCORDANCE WITH TXDOT ITEM 132.

N

0 20 40 60 80

SCALE: 1"=40' H
1"=10' V

WYOMING SPRINGS
SEGMENT 1
ROUND ROCK, TX

ROUND ROCK, TEXAS

AGUIRRE & FIELDS
ENGINEERING INNOVATORS
TBPE FIRM REGISTRATION # 739

Revision No.	Date	Description

4/20/2023
STATE OF TEXAS
MACK DAVIS
119955
LICENSED
PROFESSIONAL ENGINEER
Mack Davis

100% SUBMITTAL

Project No.:	36179
Issued:	4/20/2023
Drawn By:	QBH
Checked By:	CMD
Scale:	

Sheet Title

MSE WALL 3 LAYOUT

128
Sheet Number

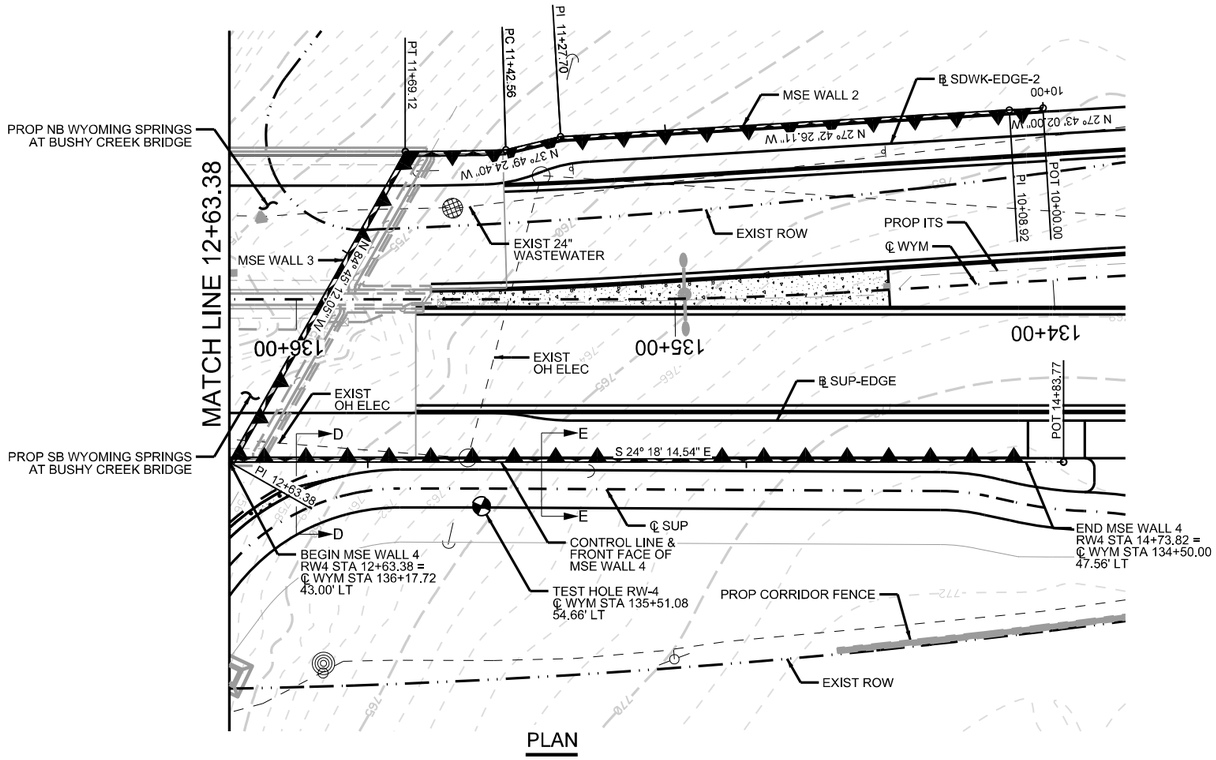

PLAN

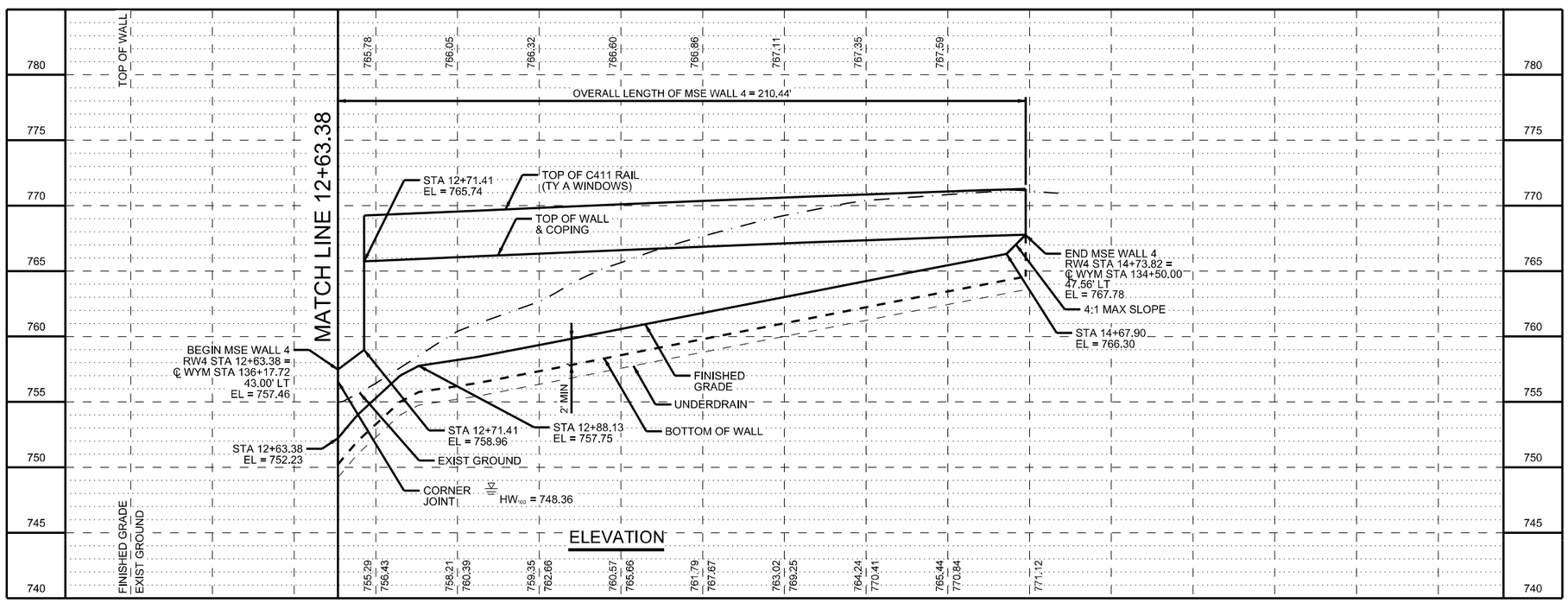

ELEVATION

GENERAL NOTES:

1. WALL SHALL BE CONSTRUCTED PER 2014 STANDARD SPECIFICATIONS FOR CONSTRUCTION AND MAINTENANCE OF HIGHWAYS, STREETS, AND BRIDGES AS ADOPTED BY THE TEXAS DEPARTMENT OF TRANSPORTATATION.
2. ALL STATIONING AND OFFSETS ARE MEASURED ALONG WALL CONTROL LINE UNLESS NOTED OTHERWISE.
3. SEE MSE WALL TYPICAL SECTIONS SHEETS FOR WALL SECTION VIEWS.
4. WALL MAY BE SUBJECT TO INUNDATION. USE TXDOT ITEM 423 TYPE DS SELECT BACKFILL.
5. SEE STANDARD RW(MSE)DD FOR MINIMUM STRAP LENGTH, WALL SOIL PARAMETERS, AND OTHER WALL DESIGN INFORMATION.
6. SEE STANDARDS RW(MSE)(MOD), RW(EM), AND RW(TRF) FOR ADDITIONAL WALL DETAILS.
7. SEE MSE WALL BORING LOGS SHEETS FOR SOIL BORING INFORMATION.
8. SEE AESTHETIC DETAILS SHEETS FOR RETAINING WALL AND RAIL AESTHETIC INFORMATION.
9. CONTRACTOR SHALL FIELD VERIFY LOCATIONS AND DEPTHS OF ALL UTILITIES PRIOR TO CONSTRUCTION, AND IF NECESSARY, NOTIFY ENGINEER OF ANY CONFLICTS.
10. CONTRACTOR SHALL PROVIDE POSITIVE DRAINAGE AWAY FROM WALL AT ALL TIMES (DURING AND POST CONSTRUCTION).
11. SEE DRAINAGE PLANS FOR EXISTING AND PROPOSED DRAINAGE INFORMATION.
12. SELECT RETAINED FILL BETWEEN THE REINFORCED ZONE AND CONSTRUCTION BACKSLOPE SHALL BE TYPE A GRANULAR FILL IN ACCORDANCE WITH TXDOT ITEM 132.

0 20 40 60 80

SCALE: 1"=40' H
1"=10' V

WYOMING SPRINGS
SEGMENT 1
ROUND ROCK, TX

ROUND ROCK, TEXAS

AGUIRRE & FIELDS
ENGINEERING INNOVATORS
TBPE FIRM REGISTRATION # 739

Revision		
No.	Date	Description

4/20/2023
STATE OF TEXAS
MACK DAVIS
119955
LICENSED
PROFESSIONAL ENGINEER

100% SUBMITTAL

Project No.:	36179
Issued:	4/20/2023
Drawn By:	QBH
Checked By:	CMD
Scale:	

Sheet Title
MSE WALL 4 LAYOUT

129
Sheet Number

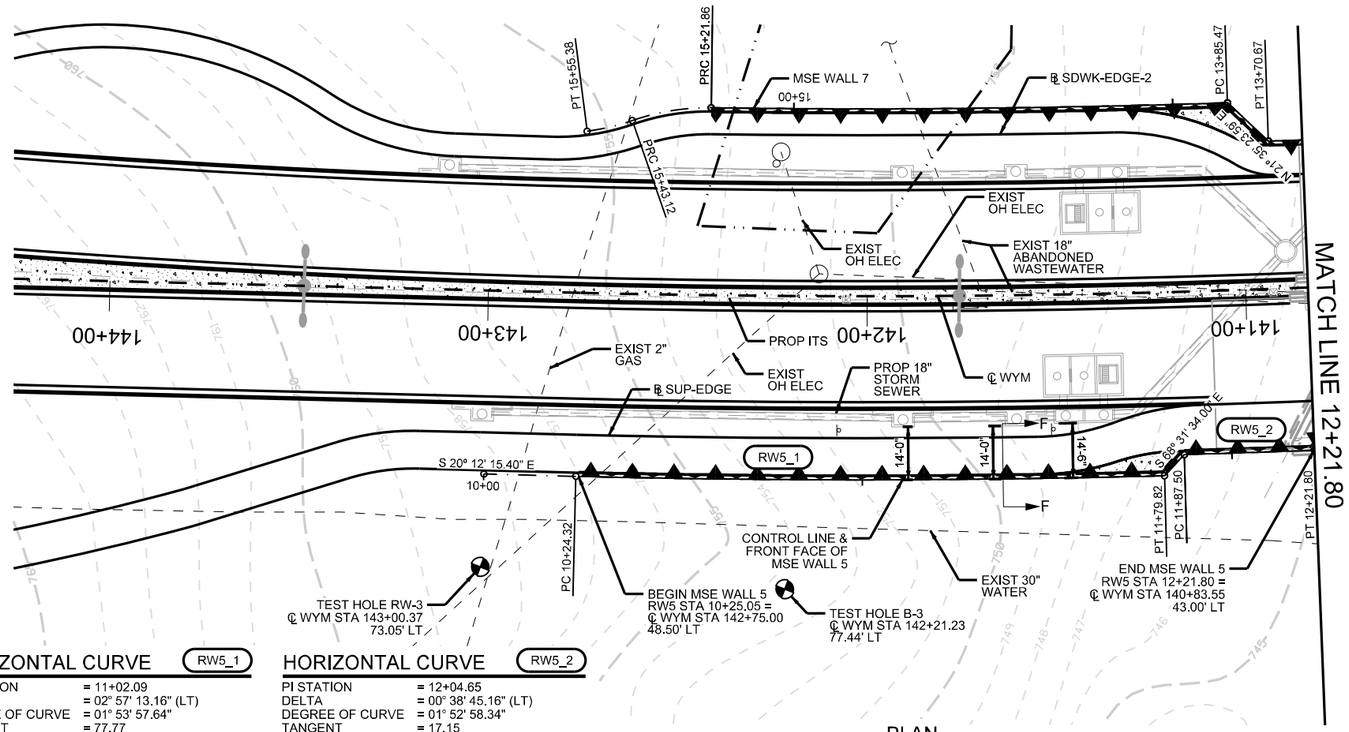

PLAN

HORIZONTAL CURVE RW5_1

PI STATION	= 11+02.09
DELTA	= 02° 57' 13.16" (LT)
DEGREE OF CURVE	= 01° 53' 57.64"
TANGENT	= 77.77
LENGTH	= 155.51
RADIUS	= 3,016.61
PC STATION	= 10+24.32
PT STATION	= 11+79.82

HORIZONTAL CURVE RW5_2

PI STATION	= 12+04.65
DELTA	= 00° 38' 45.16" (LT)
DEGREE OF CURVE	= 01° 52' 58.34"
TANGENT	= 17.15
LENGTH	= 34.30
RADIUS	= 3,043.00
PC STATION	= 11+87.50
PT STATION	= 12+21.80

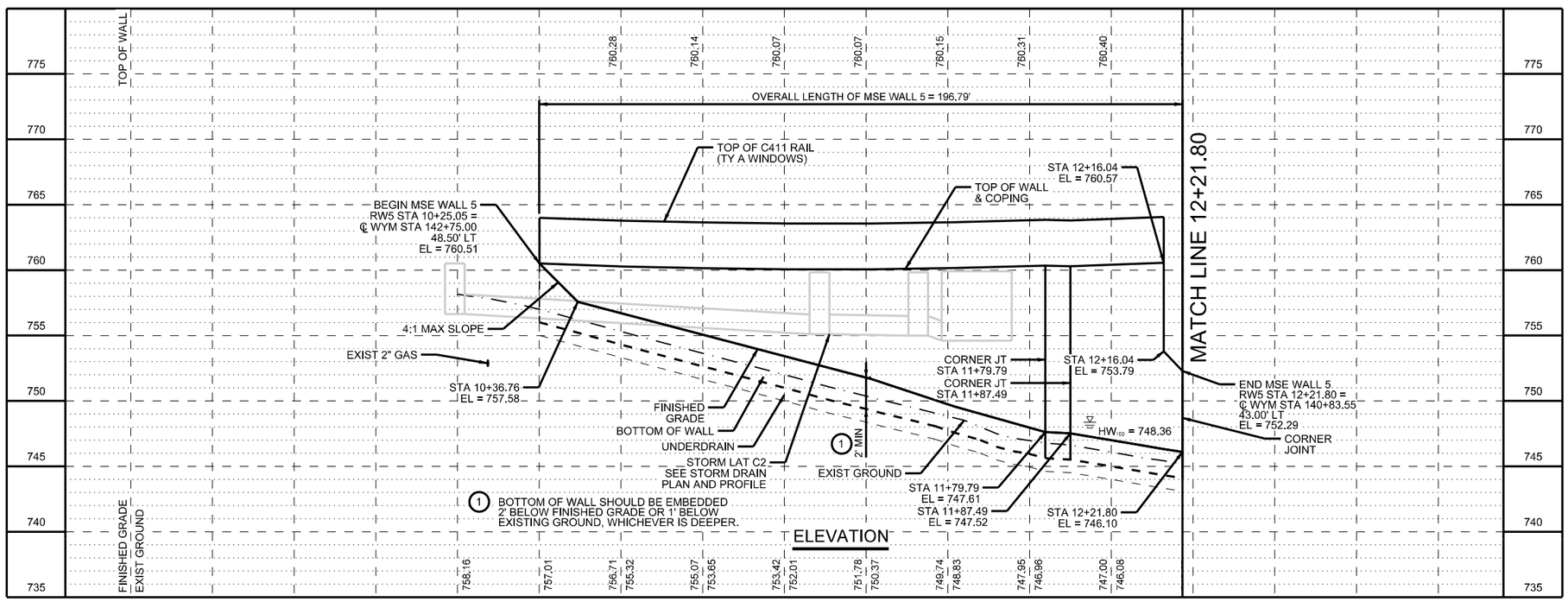

ELEVATION

GENERAL NOTES:

1. WALL SHALL BE CONSTRUCTED PER 2014 STANDARD SPECIFICATIONS FOR CONSTRUCTION AND MAINTENANCE OF HIGHWAYS, STREETS, AND BRIDGES AS ADOPTED BY THE TEXAS DEPARTMENT OF TRANSPORTATATION.
2. ALL STATIONING AND OFFSETS ARE MEASURED ALONG WALL CONTROL LINE UNLESS NOTED OTHERWISE.
3. SEE MSE WALL TYPICAL SECTIONS SHEETS FOR WALL SECTION VIEWS.
4. WALL MAY BE SUBJECT TO INUNDATION. USE TXDOT ITEM 423 TYPE DS SELECT BACKFILL.
5. SEE STANDARD RW(MSE)DD FOR MINIMUM STRAP LENGTH, WALL SOIL PARAMETERS, AND OTHER WALL DESIGN INFORMATION.
6. SEE STANDARDS RW(MSE)(MOD), RW(EM), AND RW(TRF) FOR ADDITIONAL WALL DETAILS.
7. SEE MSE WALL BORING LOGS SHEETS FOR SOIL BORING INFORMATION.
8. SEE AESTHETIC DETAILS SHEETS FOR RETAINING WALL AND RAIL AESTHETIC INFORMATION.
9. CONTRACTOR SHALL FIELD VERIFY LOCATIONS AND DEPTHS OF ALL UTILITIES PRIOR TO CONSTRUCTION, AND IF NECESSARY, NOTIFY ENGINEER OF ANY CONFLICTS.
10. CONTRACTOR SHALL PROVIDE POSITIVE DRAINAGE AWAY FROM WALL AT ALL TIMES (DURING AND POST CONSTRUCTION).
11. SEE DRAINAGE PLANS FOR EXISTING AND PROPOSED DRAINAGE INFORMATION.
12. SELECT RETAINED FILL BETWEEN THE REINFORCED ZONE AND CONSTRUCTION BACKSLOPE SHALL BE TYPE A GRANULAR FILL IN ACCORDANCE WITH TXDOT ITEM 132.

0 20 40 60 80

SCALE: 1"=40' H
1"=10' V

WYOMING SPRINGS
SEGMENT 1
ROUND ROCK, TX

ROUND ROCK, TEXAS

AGUIRRE & FIELDS
ENGINEERING INNOVATORS
TBPE FIRM REGISTRATION # 739

Revision No.	Date	Description

4/20/2023
STATE OF TEXAS
MACK DAVIS
119955
LICENSED PROFESSIONAL ENGINEER

100% SUBMITTAL

Project No.:	36179
Issued:	4/20/2023
Drawn By:	QBH
Checked By:	CMD
Scale:	

Sheet Title

MSE WALL 5 LAYOUT

130
Sheet Number

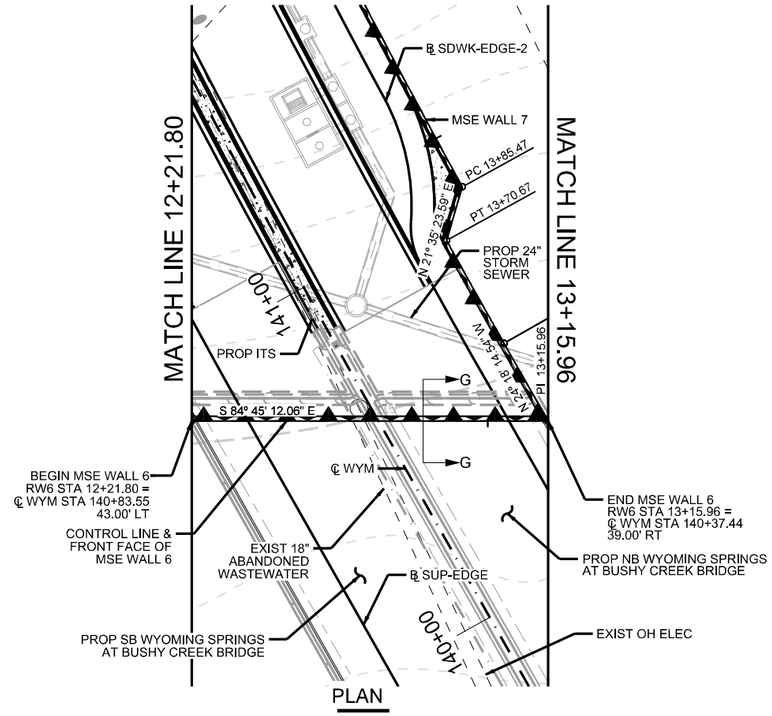

PLAN

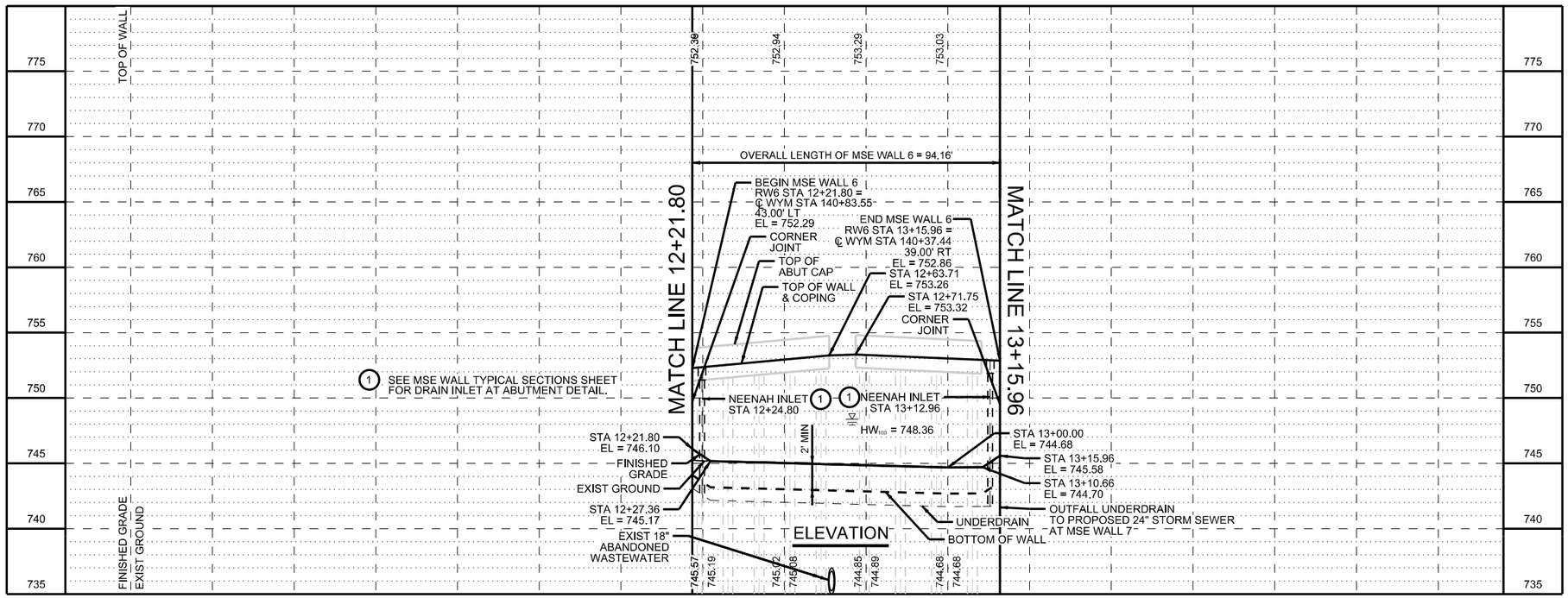

ELEVATION

13+00



GENERAL NOTES:

1. WALL SHALL BE CONSTRUCTED PER 2014 STANDARD SPECIFICATIONS FOR CONSTRUCTION AND MAINTENANCE OF HIGHWAYS, STREETS, AND BRIDGES AS ADOPTED BY THE TEXAS DEPARTMENT OF TRANSPORTATATION.
2. ALL STATIONING AND OFFSETS ARE MEASURED ALONG WALL CONTROL LINE UNLESS NOTED OTHERWISE.
3. SEE MSE WALL TYPICAL SECTIONS SHEETS FOR WALL SECTION VIEWS.
4. WALL MAY BE SUBJECT TO INUNDATION. USE TXDOT ITEM 423 TYPE DS SELECT BACKFILL.
5. SEE STANDARD RW(MSE)DD FOR MINIMUM STRAP LENGTH, WALL SOIL PARAMETERS, AND OTHER WALL DESIGN INFORMATION.
6. SEE STANDARDS RW(MSE)(MOD), RW(EM), AND RW(TRF) FOR ADDITIONAL WALL DETAILS.
7. SEE MSE WALL BORING LOGS SHEETS FOR SOIL BORING INFORMATION.
8. SEE AESTHETIC DETAILS SHEETS FOR RETAINING WALL AND RAIL AESTHETIC INFORMATION.
9. CONTRACTOR SHALL FIELD VERIFY LOCATIONS AND DEPTHS OF ALL UTILITIES PRIOR TO CONSTRUCTION, AND IF NECESSARY, NOTIFY ENGINEER OF ANY CONFLICTS.
10. CONTRACTOR SHALL PROVIDE POSITIVE DRAINAGE AWAY FROM WALL AT ALL TIMES (DURING AND POST CONSTRUCTION).
11. SEE DRAINAGE PLANS FOR EXISTING AND PROPOSED DRAINAGE INFORMATION.
12. SELECT RETAINED FILL BETWEEN THE REINFORCED ZONE AND CONSTRUCTION BACKSLOPE SHALL BE TYPE A GRANULAR FILL IN ACCORDANCE WITH TXDOT ITEM 132.

0 20 40 60 80

SCALE: 1"=40' H
1"=10' V

WYOMING SPRINGS
SEGMENT 1
ROUND ROCK, TX

ROUND ROCK, TEXAS

AGUIRRE & FIELDS
ENGINEERING INNOVATORS
TBPE FIRM REGISTRATION # 739

Revision No.	Date	Description

4/20/2023

STATE OF TEXAS
MACK DAVIS
119955
LICENSED
PROFESSIONAL ENGINEER

100% SUBMITTAL

Project No.:	36179
Issued:	4/20/2023
Drawn By:	QBH
Checked By:	CMD
Scale:	

Sheet Title
MSE WALL 6 LAYOUT

131
Sheet Number

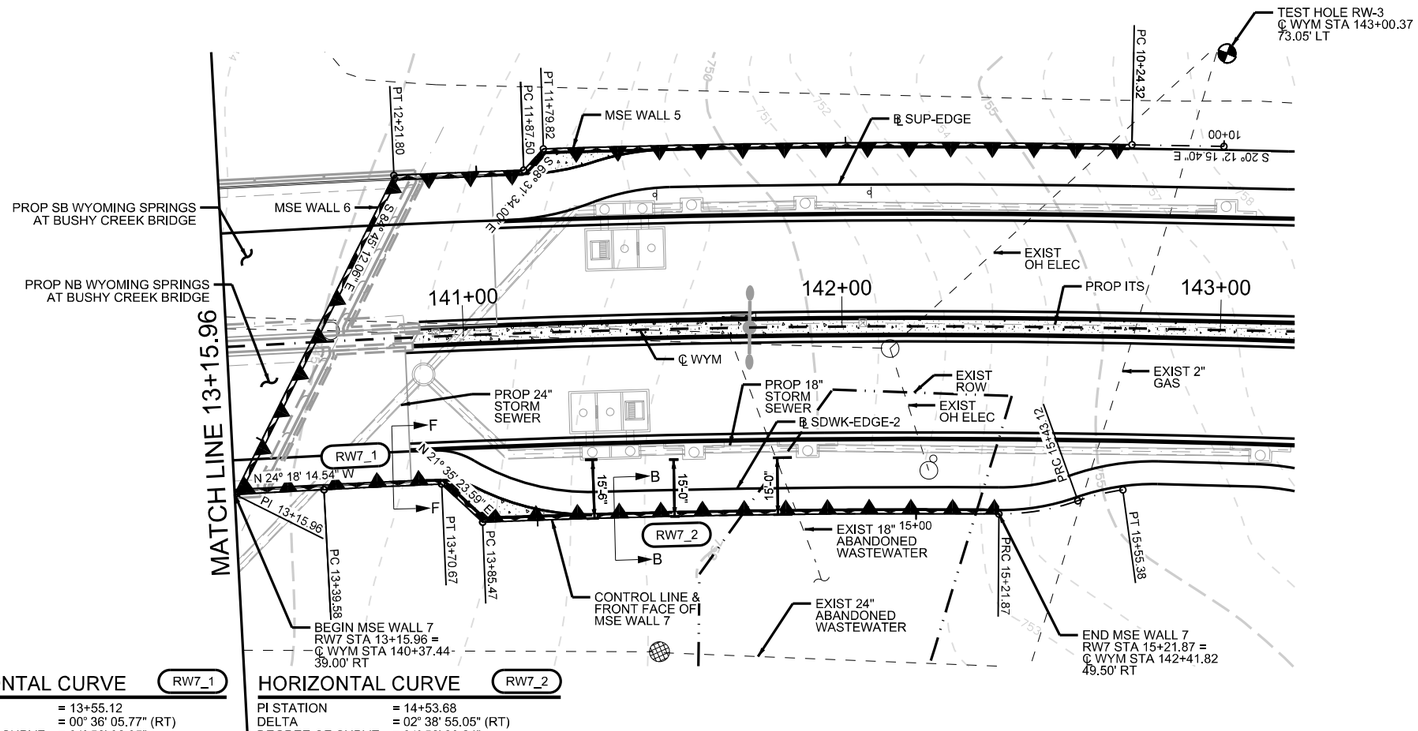

PLAN

HORIZONTAL CURVE — RW7_1

PI STATION	= 13+55.12
DELTA	= 00° 36' 05.77" (RT)
DEGREE OF CURVE	= 01° 56' 06.05"
TANGENT	= 15.55
LENGTH	= 31.09
RADIUS	= 2,961.00
PC STATION	= 13+39.58
PT STATION	= 13+70.67

HORIZONTAL CURVE — RW7_2

PI STATION	= 14+53.68
DELTA	= 02° 38' 55.05" (RT)
DEGREE OF CURVE	= 01° 56' 30.84"
TANGENT	= 68.21
LENGTH	= 136.39
RADIUS	= 2,950.50
PC STATION	= 13+85.47
PRC STATION	= 15+21.87

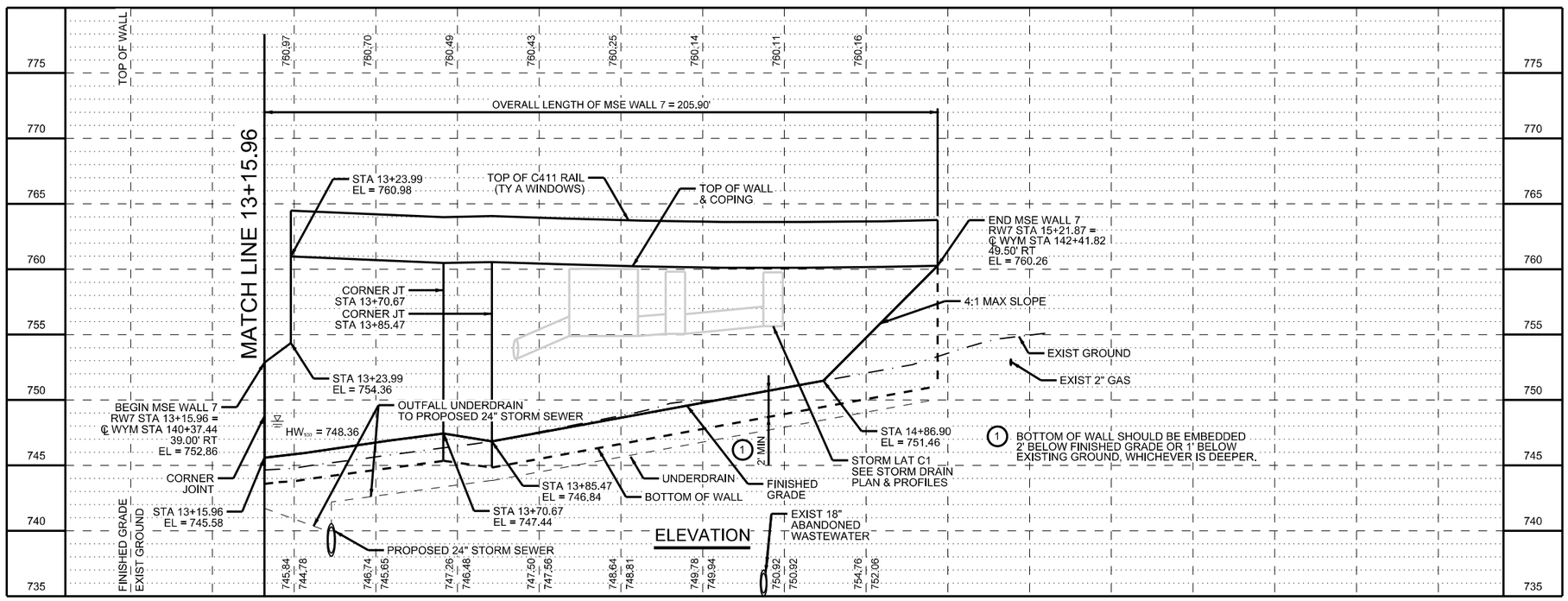

ELEVATION

GENERAL NOTES:

1. WALL SHALL BE CONSTRUCTED PER 2014 STANDARD SPECIFICATIONS FOR CONSTRUCTION AND MAINTENANCE OF HIGHWAYS, STREETS, AND BRIDGES AS ADOPTED BY THE TEXAS DEPARTMENT OF TRANSPORTATATION.
2. ALL STATIONING AND OFFSETS ARE MEASURED ALONG WALL CONTROL LINE UNLESS NOTED OTHERWISE.
3. SEE MSE WALL TYPICAL SECTIONS SHEETS FOR WALL SECTION VIEWS.
4. WALL MAY BE SUBJECT TO INUNDATION. USE TXDOT ITEM 423 TYPE DS SELECT BACKFILL.
5. SEE STANDARD RW(MSE)DD FOR MINIMUM STRAP LENGTH, WALL SOIL PARAMETERS, AND OTHER WALL DESIGN INFORMATION.
6. SEE STANDARDS RW(MSE)(MOD), RW(EM), AND RW(TRF) FOR ADDITIONAL WALL DETAILS.
7. SEE MSE WALL BORING LOGS SHEETS FOR SOIL BORING INFORMATION.
8. SEE AESTHETIC DETAILS SHEETS FOR RETAINING WALL AND RAIL AESTHETIC INFORMATION.
9. CONTRACTOR SHALL FIELD VERIFY LOCATIONS AND DEPTHS OF ALL UTILITIES PRIOR TO CONSTRUCTION, AND IF NECESSARY, NOTIFY ENGINEER OF ANY CONFLICTS.
10. CONTRACTOR SHALL PROVIDE POSITIVE DRAINAGE AWAY FROM WALL AT ALL TIMES (DURING AND POST CONSTRUCTION).
11. SEE DRAINAGE PLANS FOR EXISTING AND PROPOSED DRAINAGE INFORMATION.
12. SELECT RETAINED FILL BETWEEN THE REINFORCED ZONE AND CONSTRUCTION BACKSLOPE SHALL BE TYPE A GRANULAR FILL IN ACCORDANCE WITH TXDOT ITEM 132.

0 20 40 60 80

SCALE: 1"=40' H
1"=10' V

WYOMING SPRINGS
SEGMENT 1
ROUND ROCK, TX

ROUND ROCK, TEXAS

AGUIRRE & FIELDS
ENGINEERING INNOVATORS
TBPE FIRM REGISTRATION # 739

Revision No.	Date	Description

4/20/2023
STATE OF TEXAS
MACK DAVIS
119955
LICENSED PROFESSIONAL ENGINEER

100% SUBMITTAL

Project No.:	36179
Issued:	4/20/2023
Drawn By:	QBH
Checked By:	CMD
Scale:	

Sheet Title
MSE WALL 7 LAYOUT

132
Sheet Number

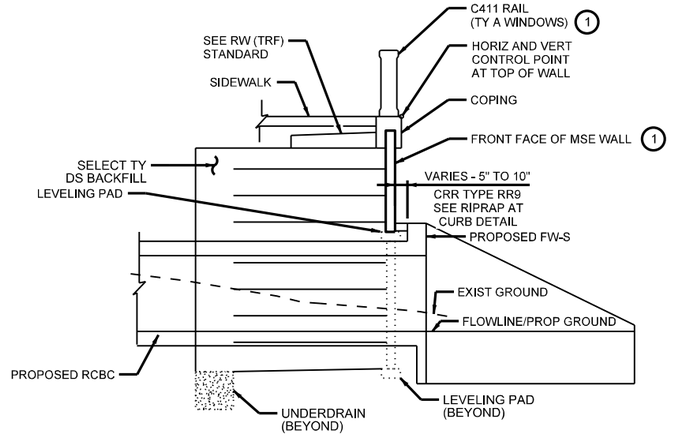

SECTION A-A

MSE WALL 1 STA 10+40.29 TO 12+21.01
N. T. S.

1 SEE AESTHETIC DETAILS SHEETS UNDER BRIDGE SHEETS FOR RAIL, ASHLAR STONE FORM LINER, ROUND ROCK LOGO, AND COLOR INFORMATION.

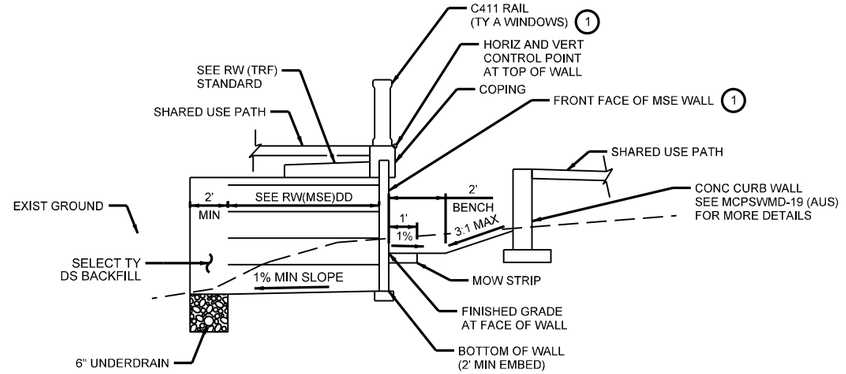

SECTION D-D

MSE WALL 4 STA 12+63.38 TO 12+88.13
N. T. S.

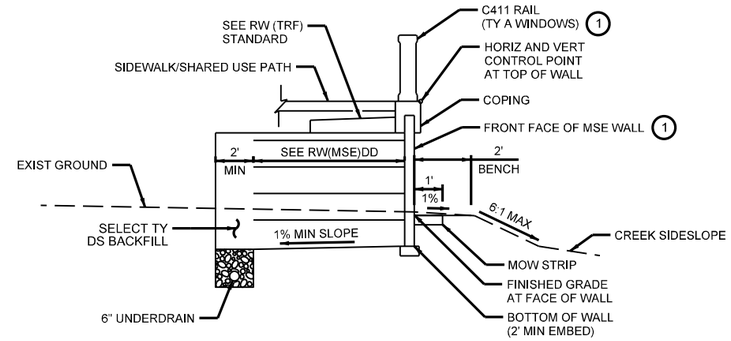

SECTION B-B

MSE WALL 2 STA 10+00.10 TO 11+69.12
MSE WALL 7 STA 13+70.67 TO 15+21.87
N. T. S.

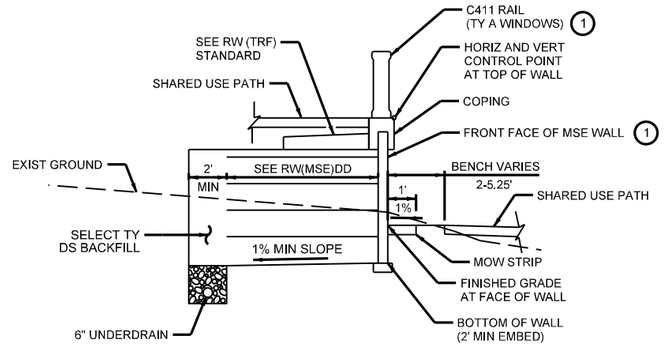

SECTION E-E

MSE WALL 4 STA 12+88.13 TO 14+73.82
N. T. S.

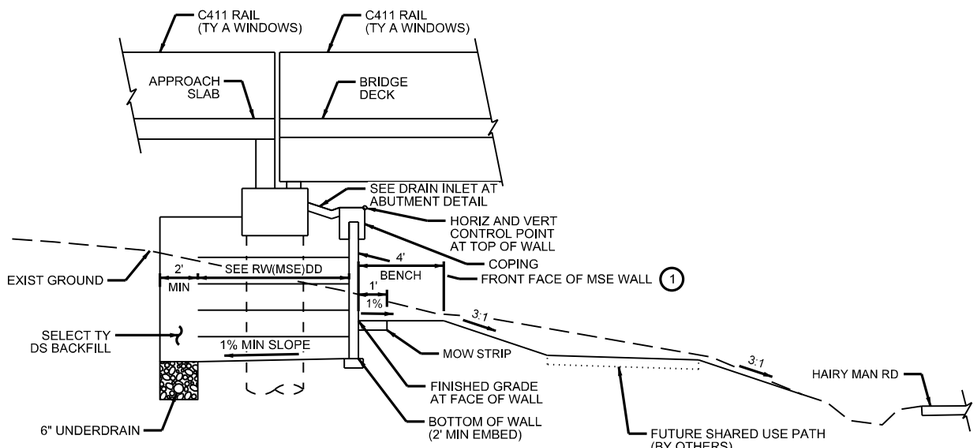

SECTION C-C

MSE WALL 3 STA 11+69.12 TO 12+63.38
N. T. S.

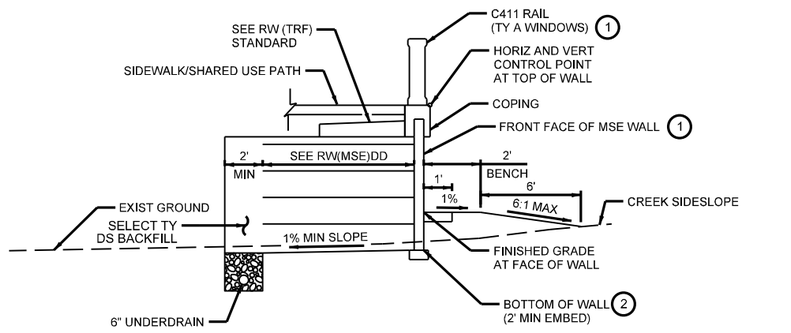

SECTION F-F

MSE WALL 5 STA 10+25.05 TO 12+21.80
MSE WALL 7 STA 13+15.96 TO 13+70.67
N. T. S.

2 BOTTOM OF WALL SHALL BE EMBEDDED 2' BELOW FINISHED GRADE OR 1' BELOW EXISTING GROUND, WHICHEVER IS DEEPER.

WYOMING SPRINGS
SEGMENT 1
ROUND ROCK, TX

AGUIRRE & FIELDS
ENGINEERING INNOVATORS
TBPE FIRM REGISTRATION # 739

Revision No.	Date	Description

4/17/2023
STATE OF TEXAS
MACK DAVIS
119955
LICENSED PROFESSIONAL ENGINEER

100% SUBMITTAL

Project No.:	36179
Issued:	4/5/2023
Drawn By:	QBH
Checked By:	CMD
Scale:	

Sheet Title
MSE WALL
TYPICAL SECTIONS
AT BRUSHY CREEK
SHEET 01 OF 02

133
Sheet Number

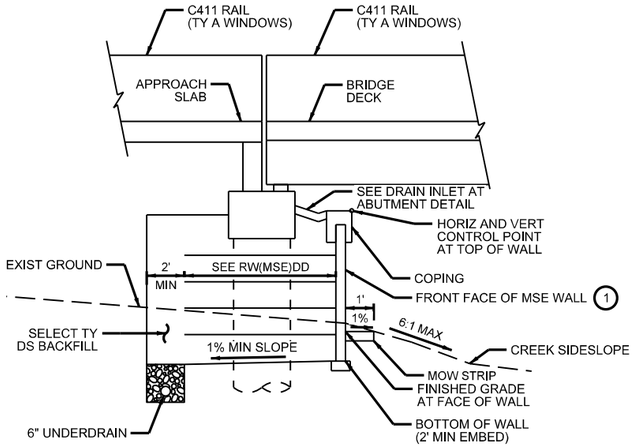

SECTION G-G

MSE WALL 6 STA 12+21.80 TO 13+15.96
N. T. S.

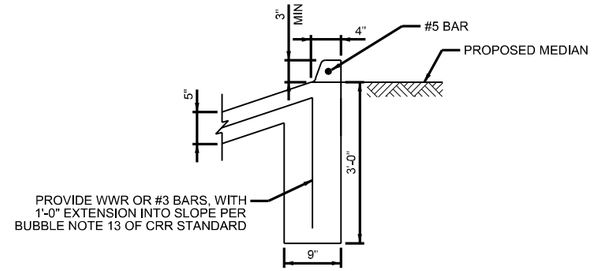

SECTION I-I

1 SEE AESTHETIC DETAILS SHEETS UNDER BRIDGE SHEETS FOR RAIL, ASHLAR STONE FORM LINER, ROUND ROCK LOGO, AND COLOR INFORMATION.

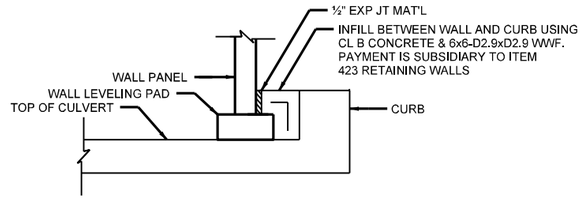

RIPRAP AT CURB DETAIL

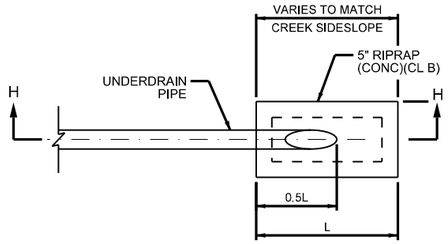

UNDERDRAIN PIPE DETAIL

(OUTFALL TO CREEK SIDESLOPE)

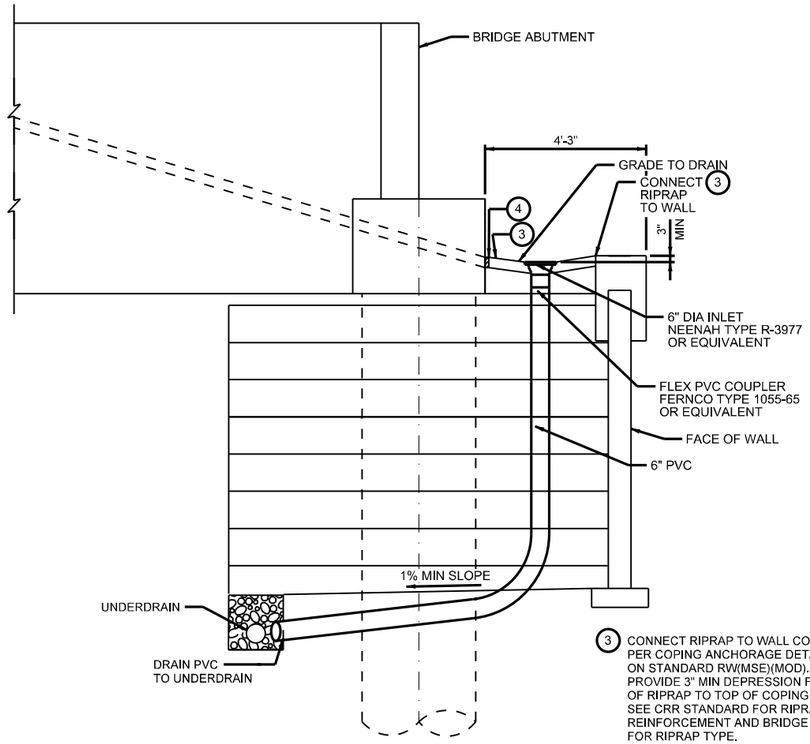

3 CONNECT RIPRAP TO WALL COPING PER COPING ANCHORAGE DETAILS ON STANDARD RW(MSE)(MOD). PROVIDE 3" MIN DEPRESSION FROM TOP OF RIPRAP TO TOP OF COPING. SEE CRR STANDARD FOR RIPRAP REINFORCEMENT AND BRIDGE PLANS FOR RIPRAP TYPE.

4 PLACE ¾" PREFORMED BITUMINOUS FIBER MATERIAL BETWEEN CRR AND FRONT OF ABUTMENT CAP.

DRAIN INLET AT ABUTMENT DETAIL

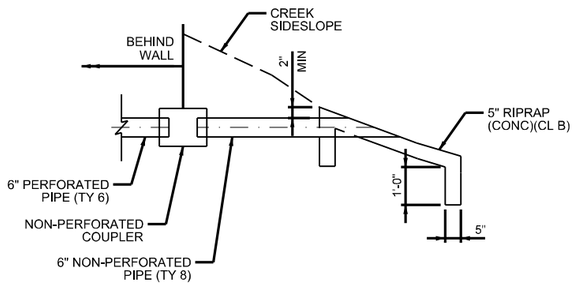

SECTION H-H

WYOMING SPRINGS
SEGMENT 1
ROUND ROCK, TX

ROUND ROCK, TEXAS

AGUIRRE & FIELDS
ENGINEERING INNOVATORS
TBPE FIRM REGISTRATION # 739

Revision		
No.	Date	Description

4/17/2023

STATE OF TEXAS
MACK DAVIS
119955
LICENSED
PROFESSIONAL ENGINEER

100% SUBMITTAL

Project No.:	36179
Issued:	4/5/2023
Drawn By:	QBH
Checked By:	CMD
Scale:	

Sheet Title
MSE WALL
TYPICAL SECTIONS
AT BRUSHY CREEK
SHEET 02 OF 02

134
Sheet Number

SUMMARY OF RETAINING WALL QUANTITIES

ITEM	423	427	432	450
BID CODE	6001	6002	6046	6036
DESCRIPTION	RETAINING WALL (MSE)	CONCRETE PAINT FINISH	RIPRAP (MOW STRIP) (5 IN)	RAIL (TY C411)
UNIT	SF	SF	CY	LF
DRY FORK CREEK				
MSE WALL 8	697	1,200	2.2	61.1
MSE WALL 9	1,284	1,430	4.5	
MSE WALL 10	961	1,590	2.7	75.7
MSE WALL 11	1,318	2,460	4.6	140.2
MSE WALL 12	1,329	1,450	3.7	
MSE WALL 13	1,092	1,910	3.4	99.9
TOTAL	6,681	10,040	21.1	376.9

WYOMING SPRINGS
SEGMENT 11
ROUND ROCK, TX

ROUND ROCK, TEXAS

AGUIRRE & FIELDS
ENGINEERING INNOVATORS
TBPE FIRM REGISTRATION # 739

Revision		
No.	Date	Description

4/17/2023

STATE OF TEXAS
MACK DAVIS
119955
LICENSED
PROFESSIONAL ENGINEER

100% SUBMITTAL

Project No.:	36179
Issued:	4/17/2023
Drawn By:	QBH
Checked By:	CMD
Scale:	

Sheet Title
MSE WALL
ESTIMATED QUANTITIES
AT DRY FORK CREEK

135
Sheet Number

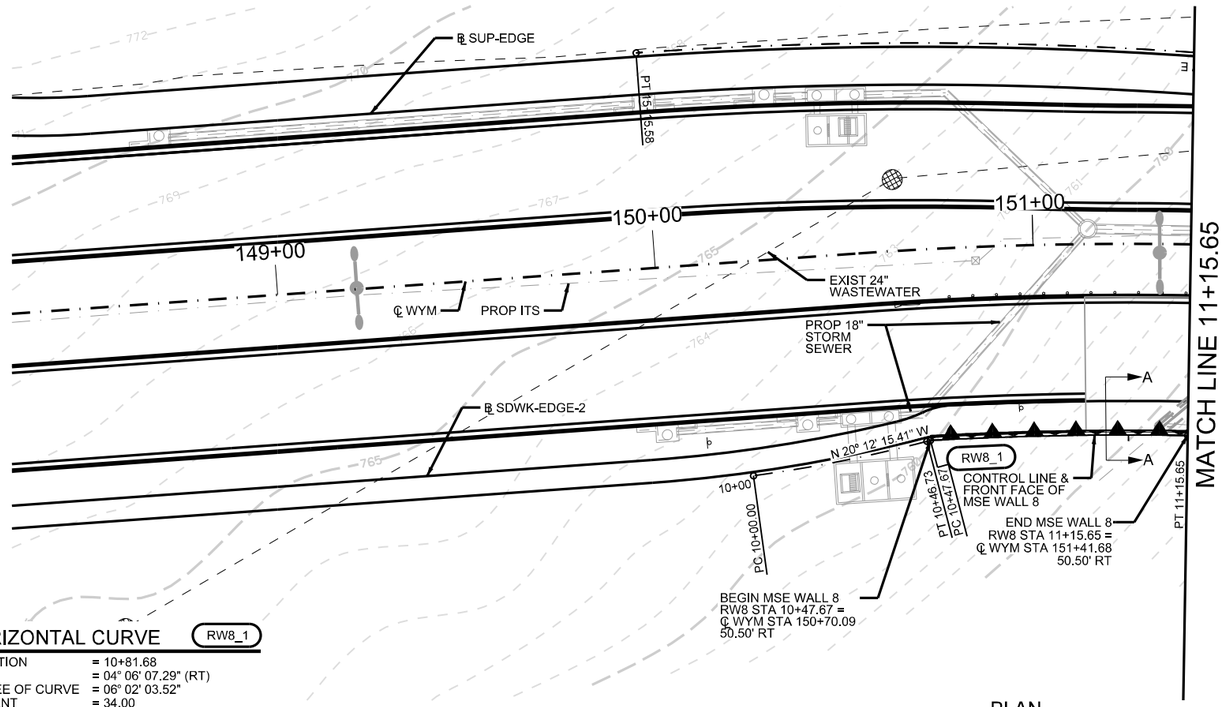

PLAN

HORIZONTAL CURVE (RW8_1)

PI STATION	= 10+81.68
DELTA	= 04° 06' 07.29" (RT)
DEGREE OF CURVE	= 06° 02' 03.52"
TANGENT	= 34.00
LENGTH	= 67.98
RADIUS	= 949.50
PC STATION	= 10+47.67
PT STATION	= 11+15.65

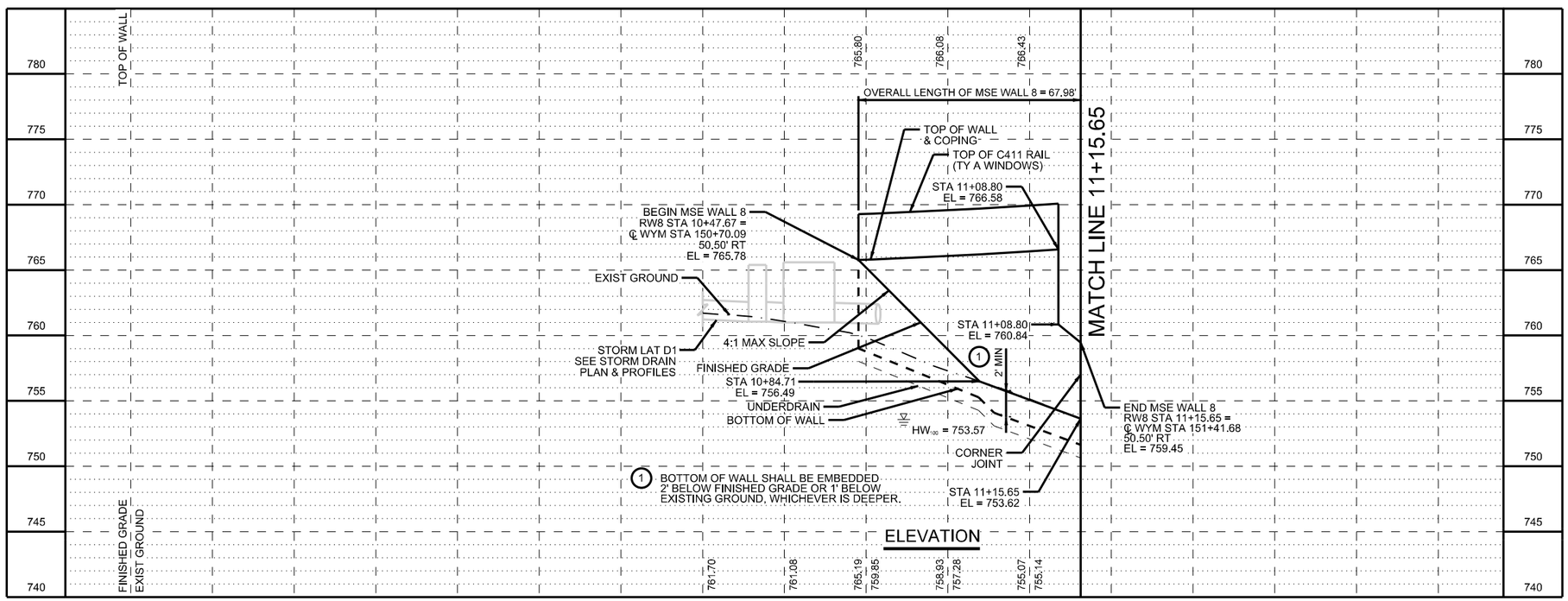

ELEVATION



GENERAL NOTES:

1. WALL SHALL BE CONSTRUCTED PER 2014 STANDARD SPECIFICATIONS FOR CONSTRUCTION AND MAINTENANCE OF HIGHWAYS, STREETS, AND BRIDGES AS ADOPTED BY THE TEXAS DEPARTMENT OF TRANSPORTATATION.
2. ALL STATIONING AND OFFSETS ARE MEASURED ALONG WALL CONTROL LINE UNLESS NOTED OTHERWISE.
3. SEE MSE WALL TYPICAL SECTIONS SHEETS FOR WALL SECTION VIEWS.
4. WALL MAY BE SUBJECT TO INUNDATION. USE TXDOT ITEM 423 TYPE DS SELECT BACKFILL.
5. SEE STANDARD RW(MSE)DD FOR MINIMUM STRAP LENGTH, WALL SOIL PARAMETERS, AND OTHER WALL DESIGN INFORMATION.
6. SEE STANDARDS RW(MSE)(MOD), RW(EM), AND RW(TRF) FOR ADDITIONAL WALL DETAILS.
7. SEE MSE WALL BORING LOGS SHEETS FOR SOIL BORING INFORMATION.
8. SEE AESTHETIC DETAILS SHEETS FOR RETAINING WALL AND RAIL AESTHETIC INFORMATION.
9. CONTRACTOR SHALL FIELD VERIFY LOCATIONS AND DEPTHS OF ALL UTILITIES PRIOR TO CONSTRUCTION, AND IF NECESSARY, NOTIFY ENGINEER OF ANY CONFLICTS.
10. CONTRACTOR SHALL PROVIDE POSITIVE DRAINAGE AWAY FROM WALL AT ALL TIMES (DURING AND POST CONSTRUCTION).
11. SEE DRAINAGE PLANS FOR EXISTING AND PROPOSED DRAINAGE INFORMATION.
12. SELECT RETAINED FILL BETWEEN THE REINFORCED ZONE AND CONSTRUCTION BACKSLOPE SHALL BE TYPE A GRANULAR FILL IN ACCORDANCE WITH TXDOT ITEM 132.

0 20 40 60 80

SCALE: 1"=40' H
1"=10' V

WYOMING SPRINGS
SEGMENT 1
ROUND ROCK, TX

ROUND ROCK, TEXAS

AGUIRRE & FIELDS
ENGINEERING INNOVATORS
TBPE FIRM REGISTRATION # 739

Revision No.	Date	Description

4/20/2023

STATE OF TEXAS
MACK DAVIS
119955
LICENSED PROFESSIONAL ENGINEER

100% SUBMITTAL

Project No.:	36179
Issued:	4/20/2023
Drawn By:	QBH
Checked By:	CMD
Scale:	

Sheet Title

MSE WALL 8 LAYOUT

136
Sheet Number

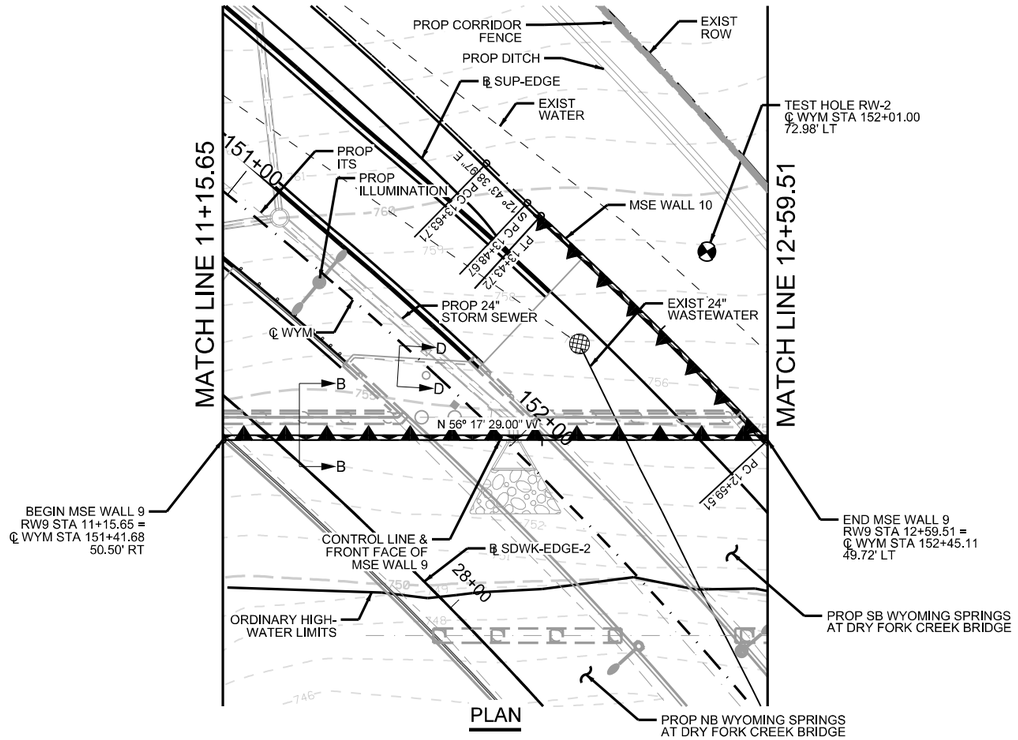

PLAN

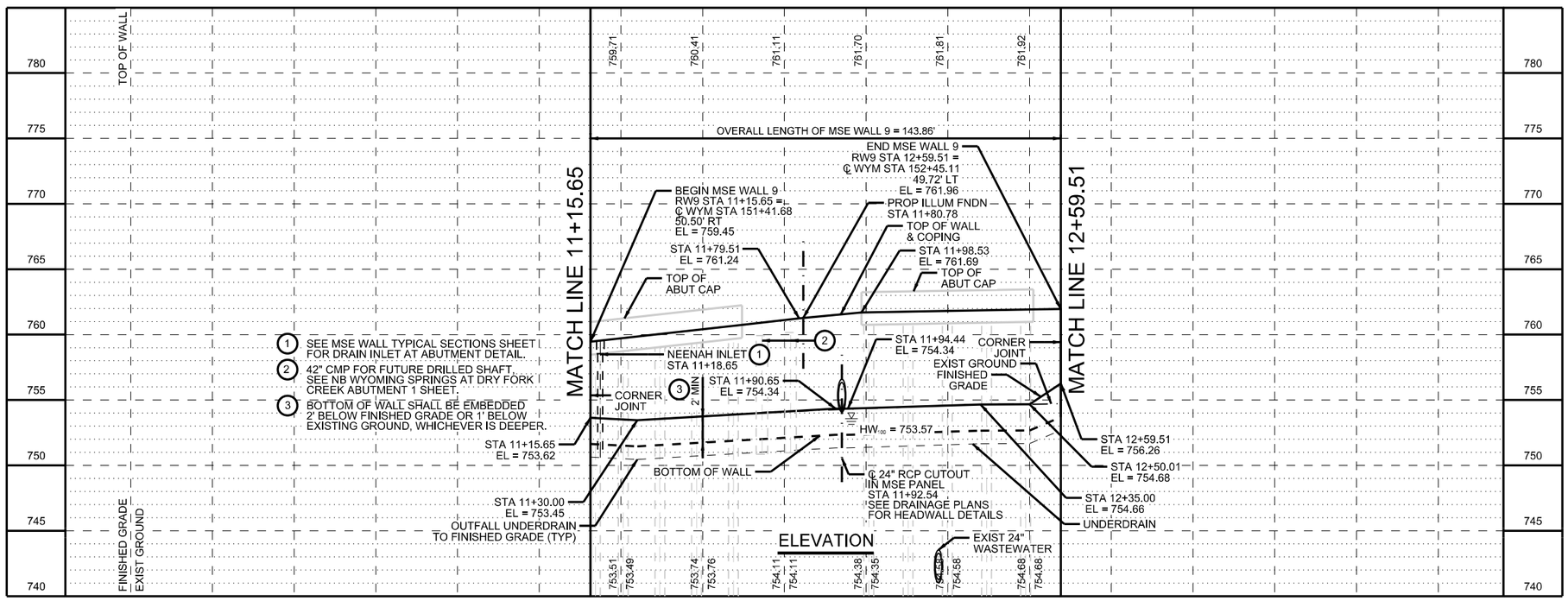

ELEVATION

12+00

GENERAL NOTES:

1. WALL SHALL BE CONSTRUCTED PER 2014 STANDARD SPECIFICATIONS FOR CONSTRUCTION AND MAINTENANCE OF HIGHWAYS, STREETS, AND BRIDGES AS ADOPTED BY THE TEXAS DEPARTMENT OF TRANSPORTATATION.
2. ALL STATIONING AND OFFSETS ARE MEASURED ALONG WALL CONTROL LINE UNLESS NOTED OTHERWISE.
3. SEE MSE WALL TYPICAL SECTIONS SHEETS FOR WALL SECTION VIEWS.
4. WALL MAY BE SUBJECT TO INUNDATION. USE TXDOT ITEM 423 TYPE DS SELECT BACKFILL.
5. SEE STANDARD RW(MSE)DD FOR MINIMUM STRAP LENGTH, WALL SOIL PARAMETERS, AND OTHER WALL DESIGN INFORMATION.
6. SEE STANDARDS RW(MSE)(MOD), RW(EM), AND RW(TRF) FOR ADDITIONAL WALL DETAILS.
7. SEE MSE WALL BORING LOGS SHEETS FOR SOIL BORING INFORMATION.
8. SEE AESTHETIC DETAILS SHEETS FOR RETAINING WALL AND RAIL AESTHETIC INFORMATION.
9. CONTRACTOR SHALL FIELD VERIFY LOCATIONS AND DEPTHS OF ALL UTILITIES PRIOR TO CONSTRUCTION, AND IF NECESSARY, NOTIFY ENGINEER OF ANY CONFLICTS.
10. CONTRACTOR SHALL PROVIDE POSITIVE DRAINAGE AWAY FROM WALL AT ALL TIMES (DURING AND POST CONSTRUCTION).
11. SEE DRAINAGE PLANS FOR EXISTING AND PROPOSED DRAINAGE INFORMATION.
12. SELECT RETAINED FILL BETWEEN THE REINFORCED ZONE AND CONSTRUCTION BACKSLOPE SHALL BE TYPE A GRANULAR FILL IN ACCORDANCE WITH TXDOT ITEM 132.

0 20 40 60 80

SCALE: 1"=40' H
1"=10' V

WYOMING SPRINGS
SEGMENT 1
ROUND ROCK, TX

AGUIRRE & FIELDS
ENGINEERING INNOVATORS
TBPE FIRM REGISTRATION # 739

Revision No.	Date	Description

4/20/2023
STATE OF TEXAS
MACK DAVIS
119955
LICENSED PROFESSIONAL ENGINEER

100% SUBMITTAL

Project No.:	36179
Issued:	4/20/2023
Drawn By:	QBH
Checked By:	CMD
Scale:	

Sheet Title
MSE WALL 9 LAYOUT

137
Sheet Number

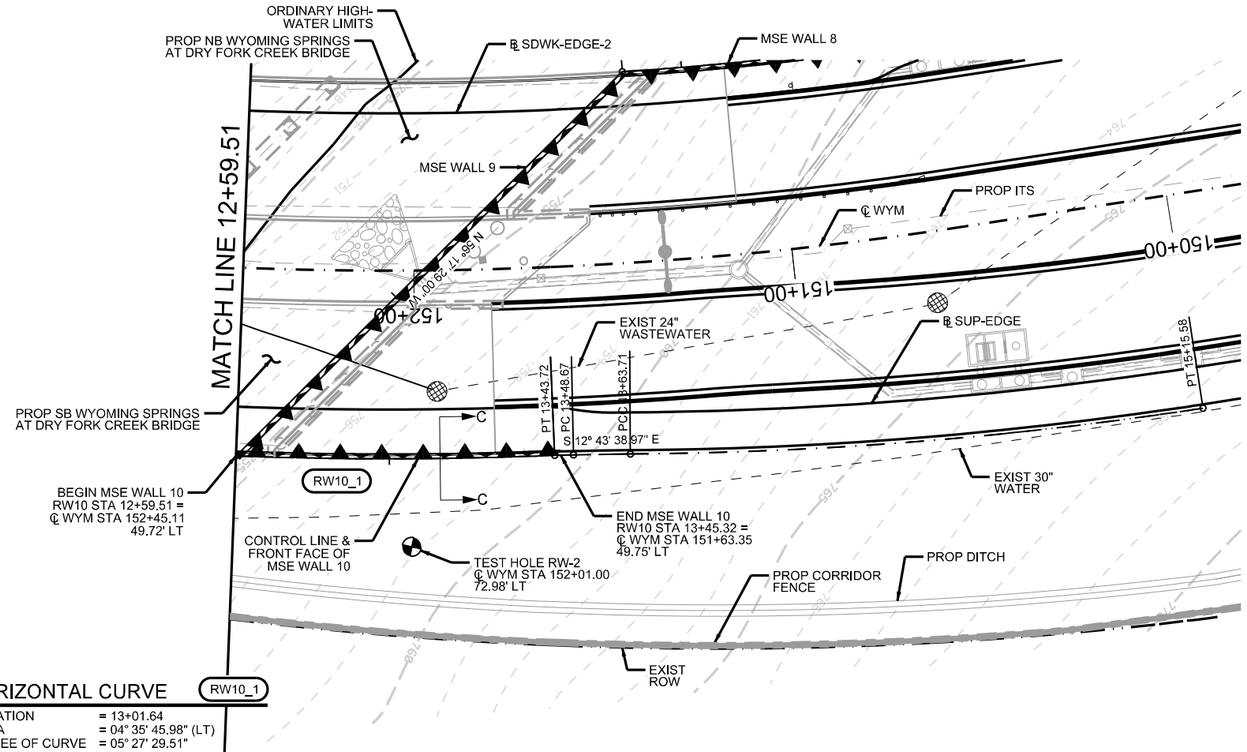

PLAN

HORIZONTAL CURVE

RW10_1

PI STATION	= 13+01.64
DELTA	= 04° 35' 45.98" (LT)
DEGREE OF CURVE	= 05° 27' 29.51"
TANGENT	= 42.13
LENGTH	= 84.21
RADIUS	= 1,049.72
PC STATION	= 12+59.51
PT STATION	= 13+43.72

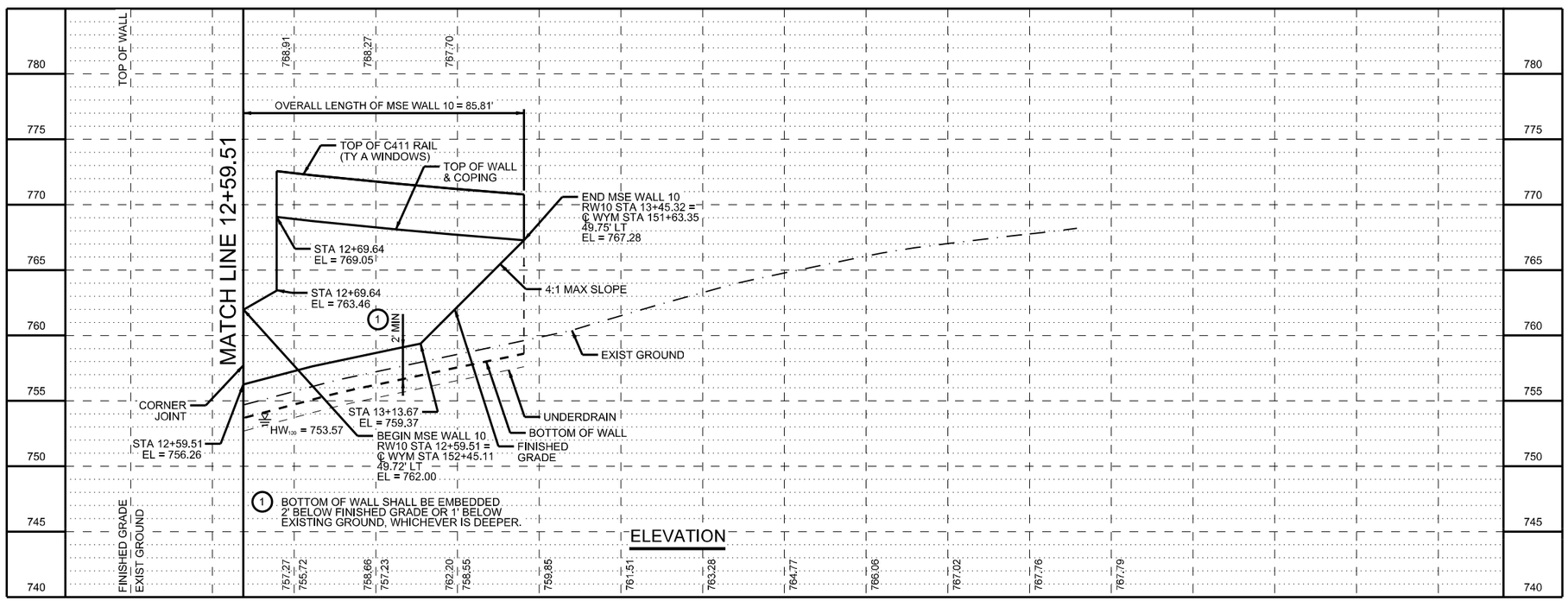

ELEVATION



GENERAL NOTES:

1. WALL SHALL BE CONSTRUCTED PER 2014 STANDARD SPECIFICATIONS FOR CONSTRUCTION AND MAINTENANCE OF HIGHWAYS, STREETS, AND BRIDGES AS ADOPTED BY THE TEXAS DEPARTMENT OF TRANSPORTATATION.
2. ALL STATIONING AND OFFSETS ARE MEASURED ALONG WALL CONTROL LINE UNLESS NOTED OTHERWISE.
3. SEE MSE WALL TYPICAL SECTIONS SHEETS FOR WALL SECTION VIEWS.
4. WALL MAY BE SUBJECT TO INUNDATION. USE TXDOT ITEM 423 TYPE DS SELECT BACKFILL.
5. SEE STANDARD RW(MSE)DD FOR MINIMUM STRAP LENGTH, WALL SOIL PARAMETERS, AND OTHER WALL DESIGN INFORMATION.
6. SEE STANDARDS RW(MSE)(MOD), RW(EM), AND RW(TRF) FOR ADDITIONAL WALL DETAILS.
7. SEE MSE WALL BORING LOGS SHEETS FOR SOIL BORING INFORMATION.
8. SEE AESTHETIC DETAILS SHEETS FOR RETAINING WALL AND RAIL AESTHETIC INFORMATION.
9. CONTRACTOR SHALL FIELD VERIFY LOCATIONS AND DEPTHS OF ALL UTILITIES PRIOR TO CONSTRUCTION, AND IF NECESSARY, NOTIFY ENGINEER OF ANY CONFLICTS.
10. CONTRACTOR SHALL PROVIDE POSITIVE DRAINAGE AWAY FROM WALL AT ALL TIMES (DURING AND POST CONSTRUCTION).
11. SEE DRAINAGE PLANS FOR EXISTING AND PROPOSED DRAINAGE INFORMATION.
12. SELECT RETAINED FILL BETWEEN THE REINFORCED ZONE AND CONSTRUCTION BACKSLOPE SHALL BE TYPE A GRANULAR FILL IN ACCORDANCE WITH TXDOT ITEM 132.

0 20 40 60 80

SCALE: 1"=40' H
1"=10' V

WYOMING SPRINGS
SEGMENT 1
ROUND ROCK, TX

ROUND ROCK, TEXAS

AGUIRRE & FIELDS
ENGINEERING INNOVATORS
TBPE FIRM REGISTRATION # 739

Revision No.	Date	Description

4/20/2023

STATE OF TEXAS
MACK DAVIS
119955
LICENSED PROFESSIONAL ENGINEER

100% SUBMITTAL

Project No.:	36179
Issued:	4/20/2023
Drawn By:	QBH
Checked By:	CMD
Scale:	

Sheet Title

MSE WALL 10 LAYOUT

138
Sheet Number

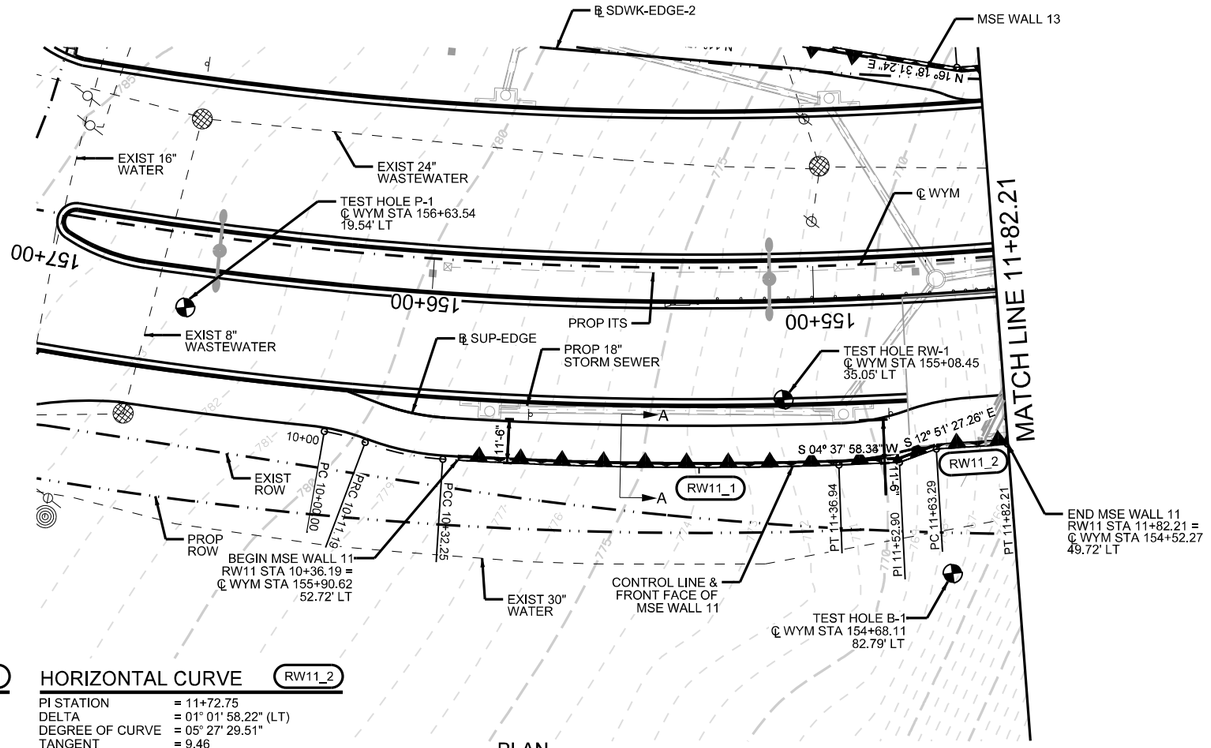

PLAN

HORIZONTAL CURVE RW11_1

PI STATION	= 10+84.64
DELTA	= 05° 41' 53.15" (LT)
DEGREE OF CURVE	= 05° 26' 33.46"
TANGENT	= 52.39
LENGTH	= 104.69
RADIUS	= 1,052.72
PCC STATION	= 10+32.25
PT STATION	= 11+36.94

HORIZONTAL CURVE RW11_2

PI STATION	= 11+72.75
DELTA	= 01° 01' 58.22" (LT)
DEGREE OF CURVE	= 05° 27' 29.51"
TANGENT	= 9.46
LENGTH	= 18.92
RADIUS	= 1,049.72
PC STATION	= 11+63.29
PT STATION	= 11+82.21

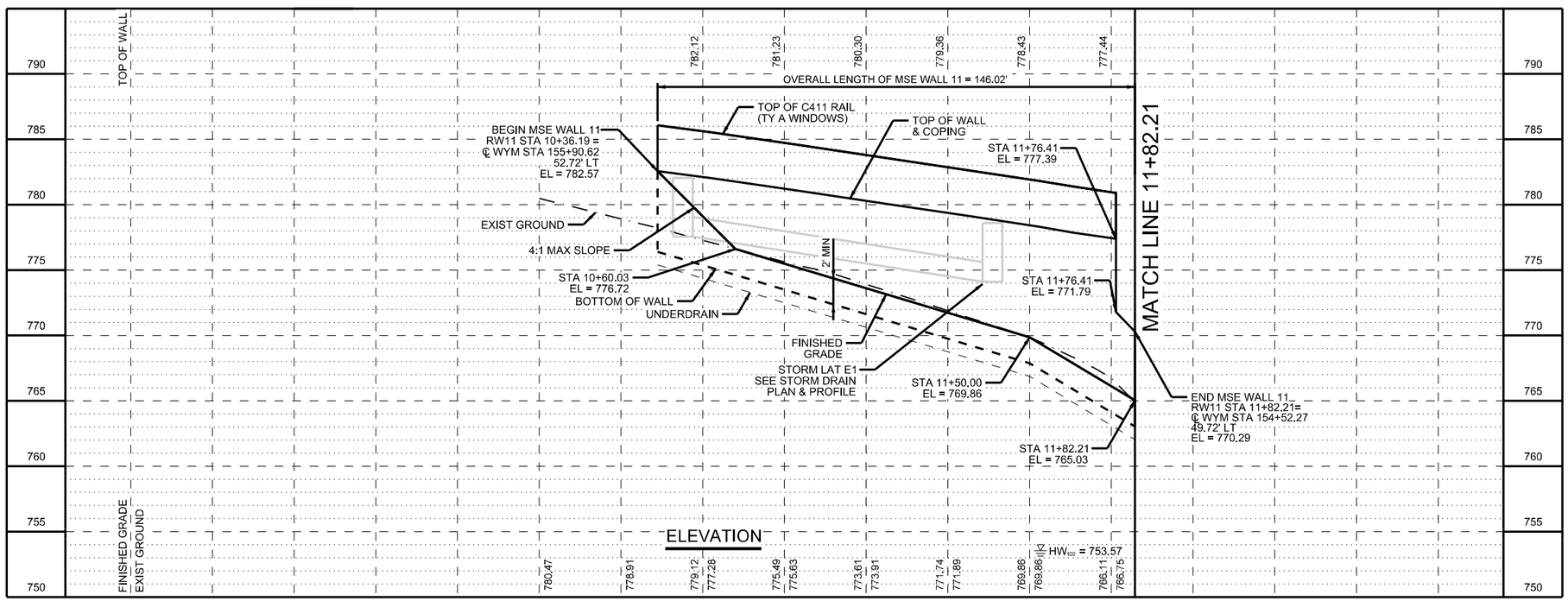

ELEVATION

N

GENERAL NOTES:

1. WALL SHALL BE CONSTRUCTED PER 2014 STANDARD SPECIFICATIONS FOR CONSTRUCTION AND MAINTENANCE OF HIGHWAYS, STREETS, AND BRIDGES AS ADOPTED BY THE TEXAS DEPARTMENT OF TRANSPORTATATION.
2. ALL STATIONING AND OFFSETS ARE MEASURED ALONG WALL CONTROL LINE UNLESS NOTED OTHERWISE.
3. SEE MSE WALL TYPICAL SECTIONS SHEETS FOR WALL SECTION VIEWS.
4. WALL MAY BE SUBJECT TO INUNDATION. USE TXDOT ITEM 423 TYPE DS SELECT BACKFILL.
5. SEE STANDARD RW(MSE)DD FOR MINIMUM STRAP LENGTH, WALL SOIL PARAMETERS, AND OTHER WALL DESIGN INFORMATION.
6. SEE STANDARDS RW(MSE)(MOD), RW(EM), AND RW(TRF) FOR ADDITIONAL WALL DETAILS.
7. SEE MSE WALL BORING LOGS SHEETS FOR SOIL BORING INFORMATION.
8. SEE AESTHETIC DETAILS SHEETS FOR RETAINING WALL AND RAIL AESTHETIC INFORMATION.
9. CONTRACTOR SHALL FIELD VERIFY LOCATIONS AND DEPTHS OF ALL UTILITIES PRIOR TO CONSTRUCTION, AND IF NECESSARY, NOTIFY ENGINEER OF ANY CONFLICTS.
10. CONTRACTOR SHALL PROVIDE POSITIVE DRAINAGE AWAY FROM WALL AT ALL TIMES (DURING AND POST CONSTRUCTION).
11. SEE DRAINAGE PLANS FOR EXISTING AND PROPOSED DRAINAGE INFORMATION.
12. SELECT RETAINED FILL BETWEEN THE REINFORCED ZONE AND CONSTRUCTION BACKSLOPE SHALL BE TYPE A GRANULAR FILL IN ACCORDANCE WITH TXDOT ITEM 132.

0 20 40 60 80

SCALE: 1"=40' H
1"=10' V

WYOMING SPRINGS
SEGMENT 1
ROUND ROCK, TX

ROUND ROCK, TEXAS

AGUIRRE & FIELDS
ENGINEERING INNOVATORS
TBPE FIRM REGISTRATION # 739

No.	Date	Revision
		Description

4/20/2023

STATE OF TEXAS
MACK DAVIS
119955
LICENSED
PROFESSIONAL ENGINEER

100% SUBMITTAL

Project No.:	36179
Issued:	4/20/2023
Drawn By:	QBH
Checked By:	CMD
Scale:	

Sheet Title

MSE WALL 11 LAYOUT

139
Sheet Number

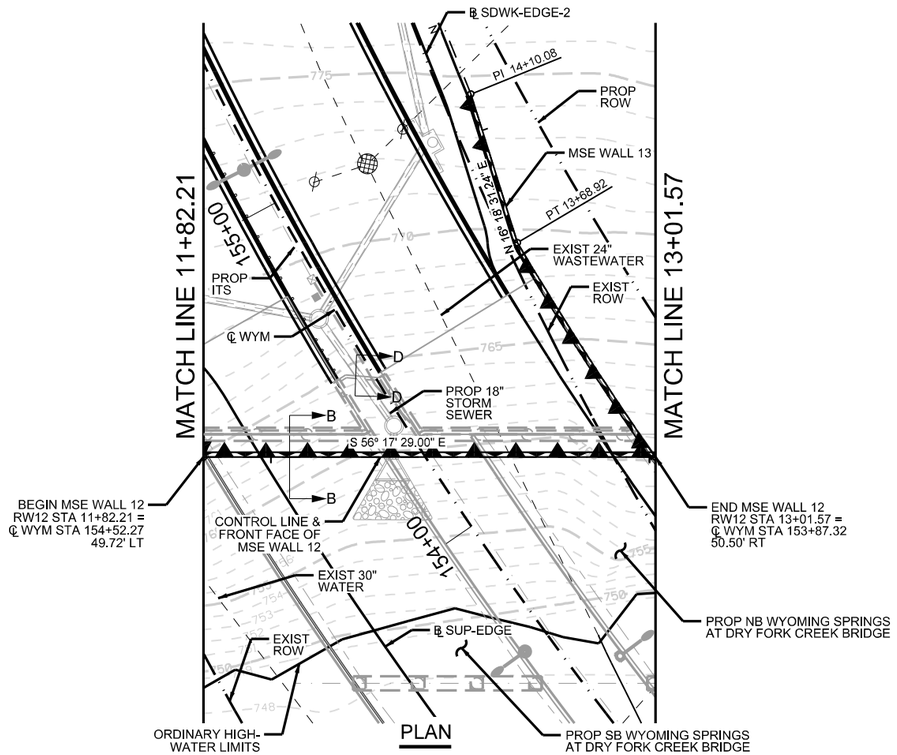

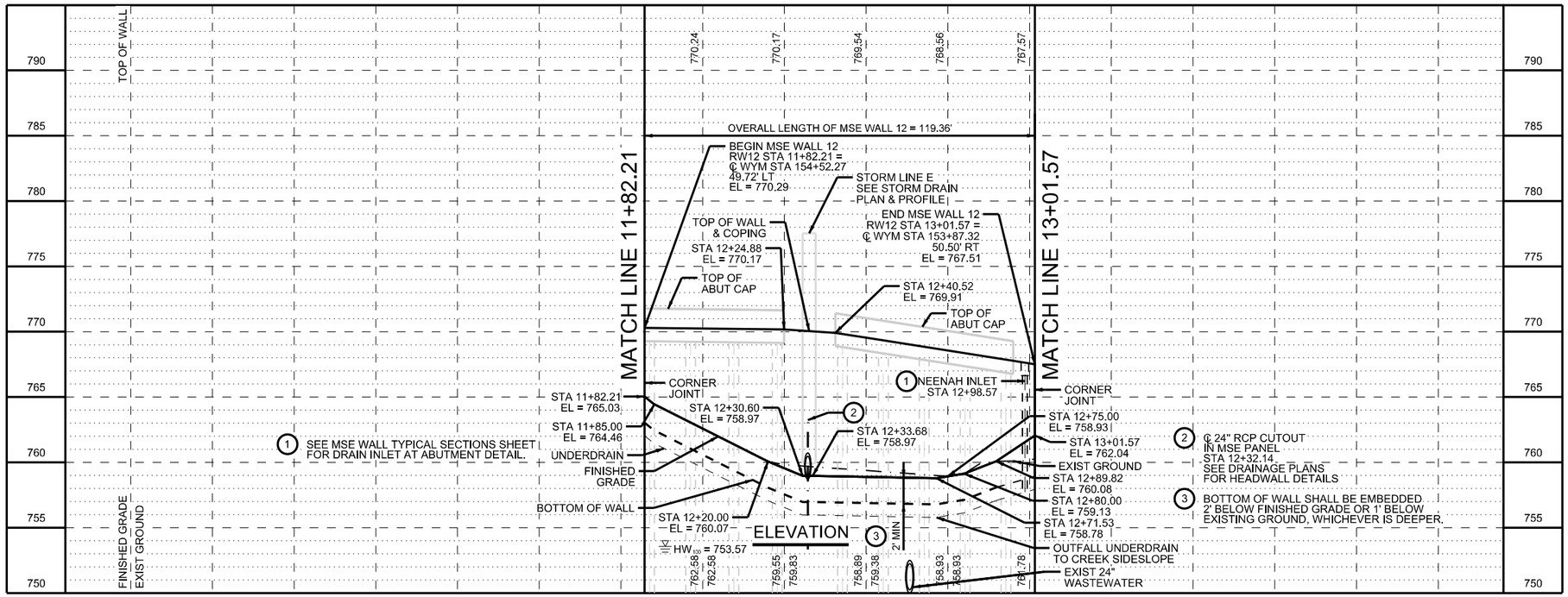

GENERAL NOTES:

1. WALL SHALL BE CONSTRUCTED PER 2014 STANDARD SPECIFICATIONS FOR CONSTRUCTION AND MAINTENANCE OF HIGHWAYS, STREETS, AND BRIDGES AS ADOPTED BY THE TEXAS DEPARTMENT OF TRANSPORTATATION.
2. ALL STATIONING AND OFFSETS ARE MEASURED ALONG WALL CONTROL LINE UNLESS NOTED OTHERWISE.
3. SEE MSE WALL TYPICAL SECTIONS SHEETS FOR WALL SECTION VIEWS.
4. WALL MAY BE SUBJECT TO INUNDATION. USE TXDOT ITEM 423 TYPE DS SELECT BACKFILL.
5. SEE STANDARD RW(MSE)DD FOR MINIMUM STRAP LENGTH, WALL SOIL PARAMETERS, AND OTHER WALL DESIGN INFORMATION.
6. SEE STANDARDS RW(MSE)(MOD), RW(EM), AND RW(TRF) FOR ADDITIONAL WALL DETAILS.
7. SEE MSE WALL BORING LOGS SHEETS FOR SOIL BORING INFORMATION.
8. SEE AESTHETIC DETAILS SHEETS FOR RETAINING WALL AND RAIL AESTHETIC INFORMATION.
9. CONTRACTOR SHALL FIELD VERIFY LOCATIONS AND DEPTHS OF ALL UTILITIES PRIOR TO CONSTRUCTION, AND IF NECESSARY, NOTIFY ENGINEER OF ANY CONFLICTS.
10. CONTRACTOR SHALL PROVIDE POSITIVE DRAINAGE AWAY FROM WALL AT ALL TIMES (DURING AND POST CONSTRUCTION).
11. SEE DRAINAGE PLANS FOR EXISTING AND PROPOSED DRAINAGE INFORMATION.
12. SELECT RETAINED FILL BETWEEN THE REINFORCED ZONE AND CONSTRUCTION BACKSLOPE SHALL BE TYPE A GRANULAR FILL IN ACCORDANCE WITH TXDOT ITEM 132.

0 20 40 60 80

SCALE: 1"=40' H
1"=10' V

WYOMING SPRINGS
SEGMENT 1
ROUND ROCK, TX

ROUND ROCK, TEXAS

AGUIRRE & FIELDS
ENGINEERING INNOVATORS
TBPE FIRM REGISTRATION # 739

Revision No.	Date	Description

4/20/2023

STATE OF TEXAS
MACK DAVIS
119955
LICENSED PROFESSIONAL ENGINEER

100% SUBMITTAL

Project No.:	36179
Issued:	4/20/2023
Drawn By:	QBH
Checked By:	CMD
Scale:	
Sheet Title	MSE WALL 12 LAYOUT

140
Sheet Number

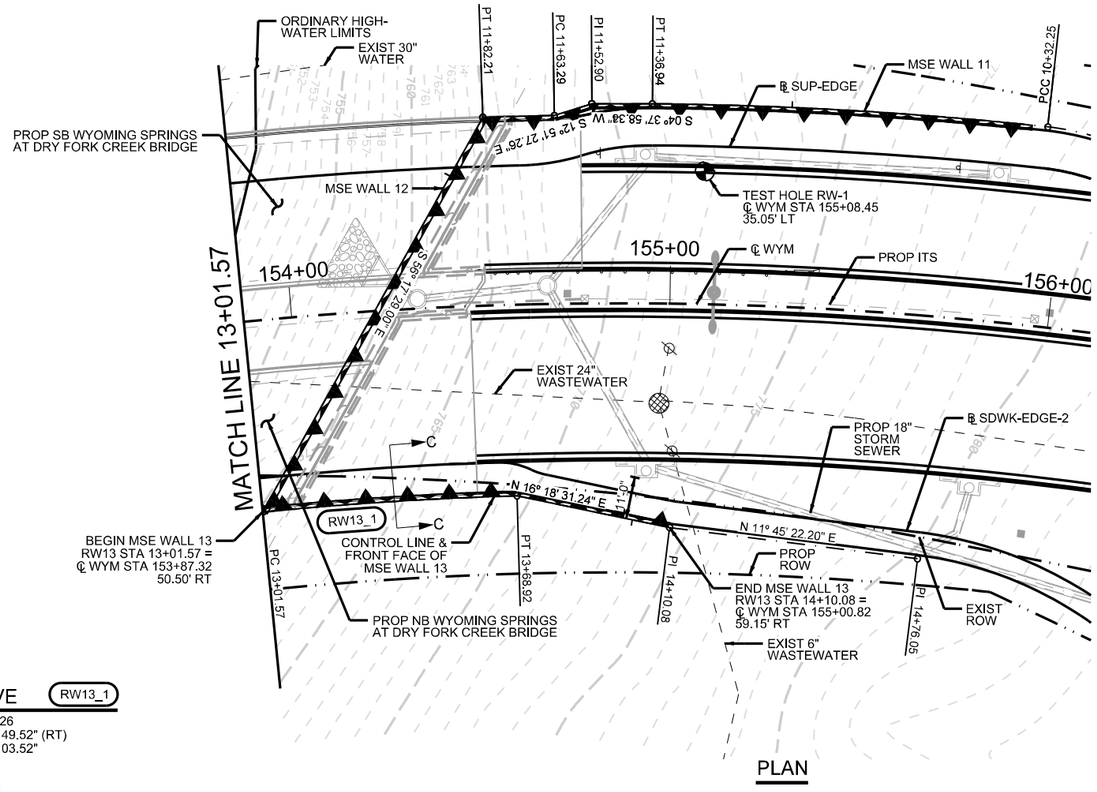

PLAN

HORIZONTAL CURVE (RW13_1)

PI STATION	= 13+35.26
DELTA	= 04° 03' 49.52" (RT)
DEGREE OF CURVE	= 06° 02' 03.52"
TANGENT	= 33.69
LENGTH	= 67.34
RADIUS	= 949.50
PC STATION	= 13+01.57
PT STATION	= 13+68.92

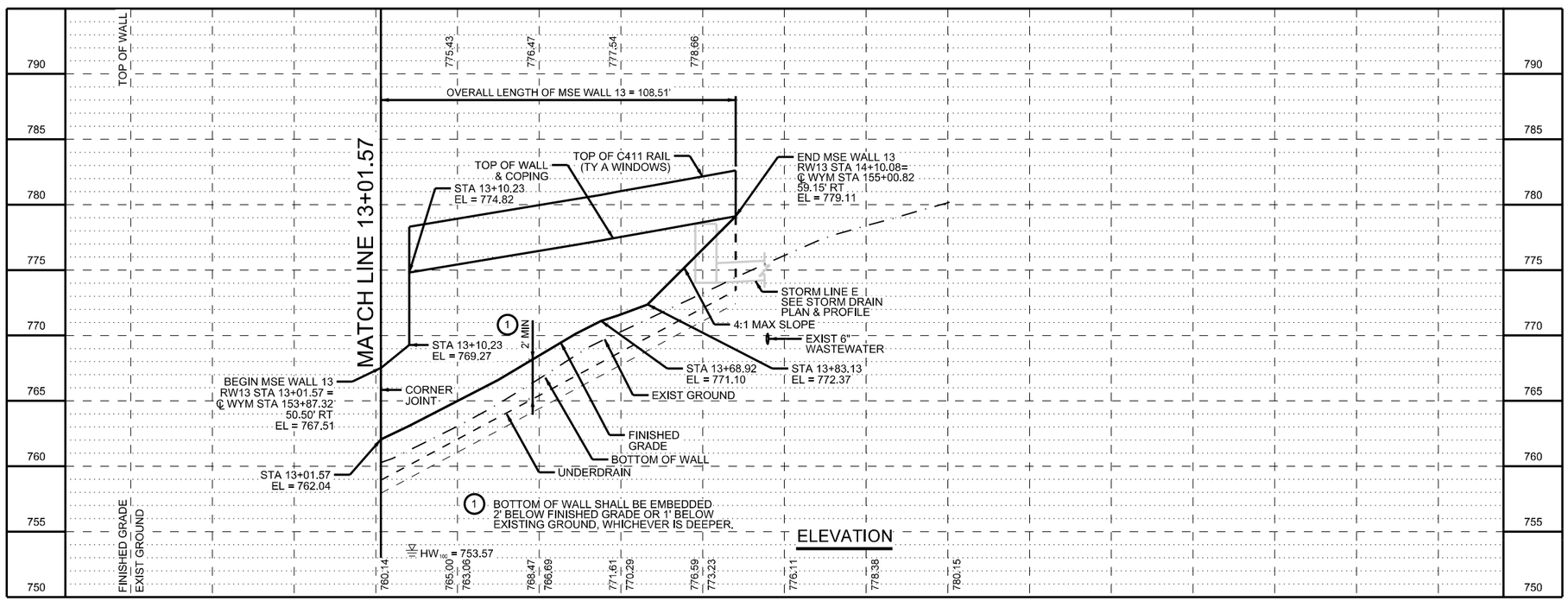

14+00

ELEVATION

GENERAL NOTES:

1. WALL SHALL BE CONSTRUCTED PER 2014 STANDARD SPECIFICATIONS FOR CONSTRUCTION AND MAINTENANCE OF HIGHWAYS, STREETS, AND BRIDGES AS ADOPTED BY THE TEXAS DEPARTMENT OF TRANSPORTATATION.
2. ALL STATIONING AND OFFSETS ARE MEASURED ALONG WALL CONTROL LINE UNLESS NOTED OTHERWISE.
3. SEE MSE WALL TYPICAL SECTIONS SHEETS FOR WALL SECTION VIEWS.
4. WALL MAY BE SUBJECT TO INUNDATION. USE TXDOT ITEM 423 TYPE DS SELECT BACKFILL.
5. SEE STANDARD RW(MSE)DD FOR MINIMUM STRAP LENGTH, WALL SOIL PARAMETERS, AND OTHER WALL DESIGN INFORMATION.
6. SEE STANDARDS RW(MSE)(MOD), RW(EM), AND RW(TRF) FOR ADDITIONAL WALL DETAILS.
7. SEE MSE WALL BORING LOGS SHEETS FOR SOIL BORING INFORMATION.
8. SEE AESTHETIC DETAILS SHEETS FOR RETAINING WALL AND RAIL AESTHETIC INFORMATION.
9. CONTRACTOR SHALL FIELD VERIFY LOCATIONS AND DEPTHS OF ALL UTILITIES PRIOR TO CONSTRUCTION, AND IF NECESSARY, NOTIFY ENGINEER OF ANY CONFLICTS.
10. CONTRACTOR SHALL PROVIDE POSITIVE DRAINAGE AWAY FROM WALL AT ALL TIMES (DURING AND POST CONSTRUCTION).
11. SEE DRAINAGE PLANS FOR EXISTING AND PROPOSED DRAINAGE INFORMATION.
12. SELECT RETAINED FILL BETWEEN THE REINFORCED ZONE AND CONSTRUCTION BACKSLOPE SHALL BE TYPE A GRANULAR FILL IN ACCORDANCE WITH TXDOT ITEM 132.

N

0 20 40 60 80

SCALE: 1"=40' H
1"=10' V

WYOMING SPRINGS
SEGMENT 1
ROUND ROCK, TX

AGUIRRE & FIELDS
ENGINEERING INNOVATORS
TBPE FIRM REGISTRATION # 739

Revision No.	Date	Description

4/20/2023
STATE OF TEXAS
MACK DAVIS
119955
LICENSED PROFESSIONAL ENGINEER

100% SUBMITTAL

Project No.:	36179
Issued:	4/20/2023
Drawn By:	QBH
Checked By:	CMD
Scale:	

Sheet Title
MSE WALL 13 LAYOUT

141
Sheet Number

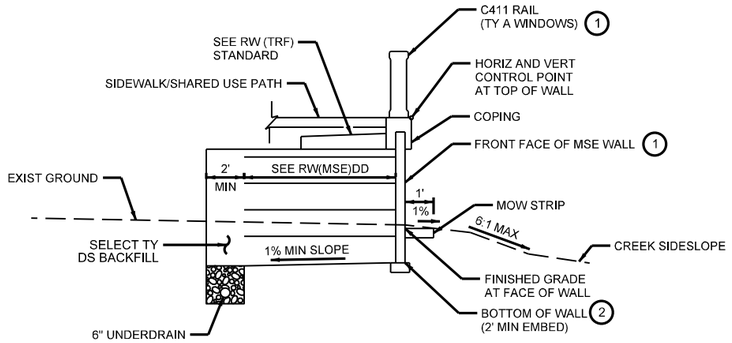

SECTION A-A

MSE WALL 8 STA 10+47.67 TO 11+15.65
MSE WALL 11 STA 10+36.19 TO 11+82.21
N. T. S.

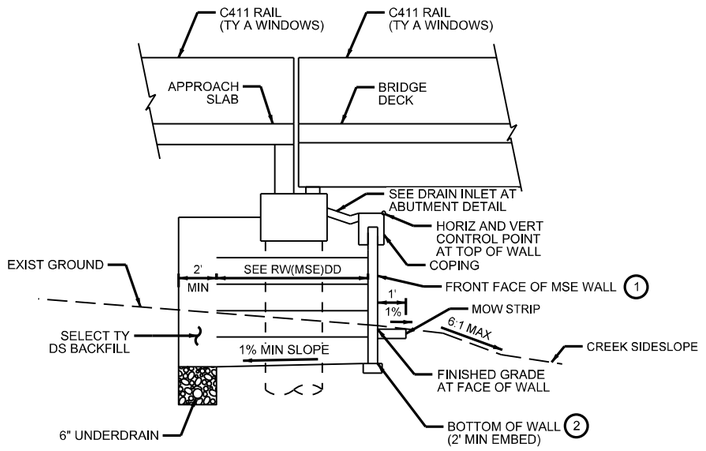

SECTION B-B

MSE WALL 9 STA 11+15.65 TO 12+59.51
MSE WALL 12 STA 11+82.21 TO 13+01.57
N. T. S.

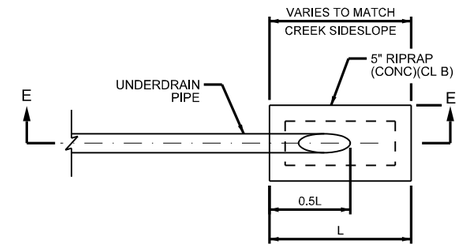

UNDERDRAIN PIPE DETAIL

(OUTFALL TO CREEK SIDESLOPE)

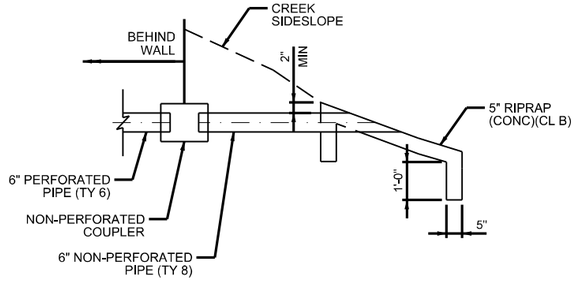

SECTION E-E

1. SEE AESTHETIC DETAILS SHEETS UNDER BRIDGE SHEETS FOR RAIL, ASHLAR STONE FORM LINER, ROUND ROCK LOGO, AND COLOR INFORMATION.
2. BOTTOM OF WALL SHALL BE EMBEDDED 2' BELOW FINISHED GRADE OR 1' BELOW EXISTING GROUND, WHICHEVER IS DEEPER.

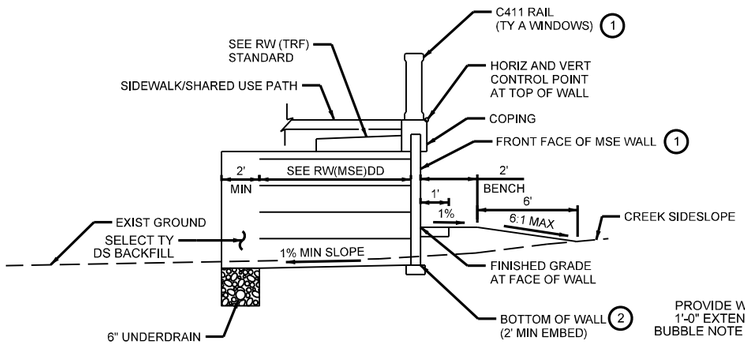

SECTION C-C

MSE WALL 10 STA 12+59.51 TO 13+45.32
MSE WALL 13 STA 13+01.57 TO 14+10.08
N. T. S.

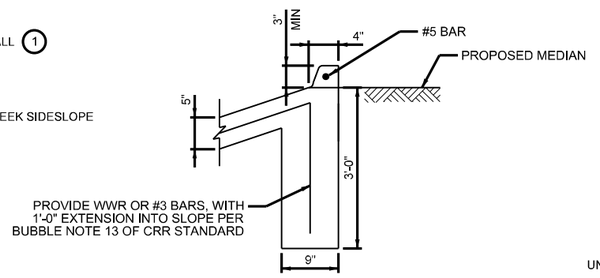

SECTION D-D

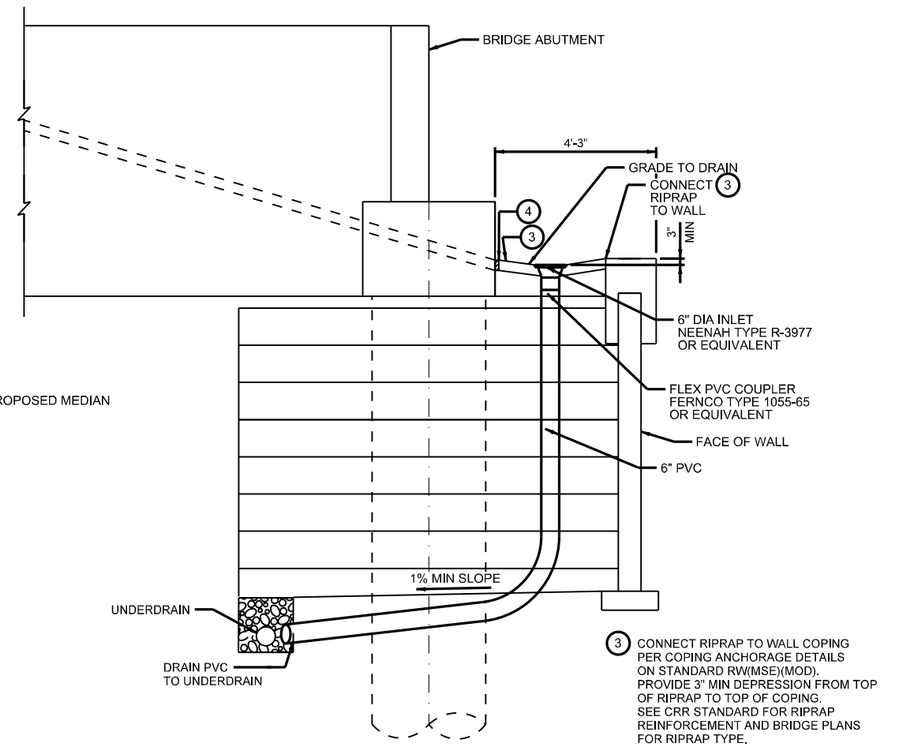

DRAIN INLET AT ABUTMENT DETAIL

3. CONNECT RIPRAP TO WALL COPING PER COPING ANCHORAGE DETAILS ON STANDARD RW(MSE)(MOD). PROVIDE 3" MIN DEPRESSION FROM TOP OF RIPRAP TO TOP OF COPING. SEE CRR STANDARD FOR RIPRAP REINFORCEMENT AND BRIDGE PLANS FOR RIPRAP TYPE.
4. PLACE ¾" PREFORMED BITUMINOUS FIBER MATERIAL BETWEEN CRR AND FRONT OF ABUTMENT CAP.

WYOMING SPRINGS
SEGMENT 1
ROUND ROCK, TX

ROUND ROCK, TEXAS

AGUIRRE & FIELDS
ENGINEERING INNOVATORS
TBPE FIRM REGISTRATION # 739

Revision No.	Date	Description

4/17/2023

STATE OF TEXAS
MACK DAVIS
119955
LICENSED PROFESSIONAL ENGINEER

100% SUBMITTAL

Project No.:	36179
Issued:	4/5/2023
Drawn By:	QBH
Checked By:	CMD
Scale:	

Sheet Title
MSE WALL
TYPICAL SECTIONS
AT DRY FORK CREEK

142
Sheet Number

LOG OF BORING NO. RW-1

Wyoming Springs Drive Segment 1
From Creek Bend Boulevard to Sam Bass Road
Williamson County, Texas

RABA KISTNER
TBPE Firm Registration No. F-3257

DRILLING METHOD: Straight Flight Auger & NX Core
LOCATION: N 30.53046; W 97.72354

DEPTH, FT	SYMBOL	SAMPLES	DESCRIPTION OF MATERIAL	BLOWS PER FT	UNIT DRY WEIGHT, pcf	SHEAR STRENGTH, TONS/FT² (0.5 1.0 1.5 2.0 2.5 3.0 3.5 4.0) / PLASTIC LIMIT / WATER CONTENT / LIQUID LIMIT (10 20 30 40 50 60 70 80)	PLASTICITY INDEX	% -200
			SURFACE ELEVATION: 772 ft					
			CLAYEY SAND (SC), Very Dense, Brown, with limestone fragments and calcareous deposits (decomposed limestone)	50/5"			17	46
			LIMESTONE, Hard, Tan	ref/2"				
5				ref/3"				
				ref/2"				
				ref/2"				
10								
				ref/1"				
15			Boring Terminated					
			NOTES: 1. Groundwater not encountered during drilling operations. 2. Borehole backfilled with auger cuttings and bentonite. 3. Approximate Station: STA 155+05					
20								
25								

DEPTH DRILLED:	15.0 ft	**DEPTH TO WATER:**	Dry	**PROJ. No.:**	AAA19-110-00
DATE DRILLED:	2/18/2020	**DATE MEASURED:**	2/18/2020	**FIGURE:**	15

NOTE: THESE LOGS SHOULD NOT BE USED SEPARATELY FROM THE PROJECT REPORT

LOG OF BORING NO. RW-2

Wyoming Springs Drive Segment 1
From Creek Bend Boulevard to Sam Bass Road
Williamson County, Texas

RABA KISTNER
TBPE Firm Registration No. F-3257

DRILLING METHOD: Straight Flight Auger & NX Core
LOCATION: N 30.52957; W 97.72363

DEPTH, FT	SYMBOL	SAMPLES	DESCRIPTION OF MATERIAL	BLOWS PER FT	UNIT DRY WEIGHT, pcf	SHEAR STRENGTH, TONS/FT² (0.5 1.0 1.5 2.0 2.5 3.0 3.5 4.0) / PLASTIC LIMIT / WATER CONTENT / LIQUID LIMIT (10 20 30 40 50 60 70 80)	PLASTICITY INDEX	% -200
			SURFACE ELEVATION: 754 ft					
			FAT CLAY (CH), Hard, Brown, with limestone fragments and calcareous deposits					
			LIMESTONE, Hard, Tan, Highly Weathered, vuggy, with ferrous staining	50/4"				
5				ref/5"				
				ref/0"				
				ref/0.5"				
10			**REC = 73%** **RQD = 0%**					
15			Boring Terminated					
			NOTES: 1. Groundwater not encountered during drilling operations. 2. Borehole backfilled with auger cuttings and bentonite. 3. Approximate Station: STA 152+00					
20								
25								

DEPTH DRILLED:	15.0 ft	**DEPTH TO WATER:**	Dry	**PROJ. No.:**	AAA19-110-00
DATE DRILLED:	2/28/2020	**DATE MEASURED:**	2/28/2020	**FIGURE:**	16

NOTE: THESE LOGS SHOULD NOT BE USED SEPARATELY FROM THE PROJECT REPORT

STATE OF TEXAS
RICHARD T. SHIMONO
135020
LICENSED
PROFESSIONAL ENGINEER

4/05/2023

WYOMING SPRINGS
SEGMENT 1
ROUND ROCK, TX

ROUND ROCK, TEXAS

RABA KISTNER
TBPE Firm Registration No. F-3257

Revision No.	Date	Description

100% SUBMITTAL

Project No.:	36179
Issued:	3/15/2023
Drawn By:	QBH
Checked By:	RJW
Scale:	

Sheet Title
MSE WALL
BORING LOGS
SHEET 01 OF 03

143
Sheet Number

LOG OF BORING NO. RW-3

Wyoming Springs Drive Segment 1
From Creek Bend Boulevard to Sam Bass Road
Williamson County, Texas

RABA KISTNER
TBPE Firm Registration No. F-3257

DRILLING METHOD: Straight Flight Auger & NX Core
LOCATION: N 30.52719; W 97.72273

DEPTH, FT	SYMBOL	SAMPLES	DESCRIPTION OF MATERIAL	BLOWS PER FT	UNIT DRY WEIGHT, pcf	SHEAR STRENGTH, TONS/FT² (0.5 1.0 1.5 2.0 2.5 3.0 3.5 4.0) / PLASTIC LIMIT / WATER CONTENT / LIQUID LIMIT (10 20 30 40 50 60 70 80)	PLASTICITY INDEX	% -200
			SURFACE ELEVATION: 756 ft					
			LEAN CLAY (CL), Hard, Brown, with limestone fragments, calcareous nodules, and ferrous staining				23	
			LIMESTONE, Hard, Tan, Highly Weathered, vuggy, with ferrous staining	ref/5"				
				ref/3"				
				ref/1"				
				ref/1"				
			REC = 43% **RQD = 17%**					
			Boring Terminated					

NOTES:
1. Groundwater not encountered during drilling operations.
2. Borehole backfilled with auger cuttings and bentonite.
3. Approximate Station: STA 142+90

DEPTH DRILLED:	15.0 ft	**DEPTH TO WATER:**	0ry	**PROJ. No.:**	AAA19-110-00
DATE DRILLED:	2/28/2020	**DATE MEASURED:**	2/28/2020	**FIGURE:**	17

NOTE: THESE LOGS SHOULD NOT BE USED SEPARATELY FROM THE PROJECT REPORT

LOG OF BORING NO. RW-4

Wyoming Springs Drive Segment 1
From Creek Bend Boulevard to Sam Bass Road
Williamson County, Texas

RABA KISTNER
TBPE Firm Registration No. F-3257

DRILLING METHOD: Straight Flight Auger & NX Core
LOCATION: N 30.52529; W 97.72177

DEPTH, FT	SYMBOL	SAMPLES	DESCRIPTION OF MATERIAL	BLOWS PER FT	UNIT DRY WEIGHT, pcf	SHEAR STRENGTH, TONS/FT² (0.5 1.0 1.5 2.0 2.5 3.0 3.5 4.0) / PLASTIC LIMIT / WATER CONTENT / LIQUID LIMIT (10 20 30 40 50 60 70 80)	PLASTICITY INDEX	% -200
			SURFACE ELEVATION: 762 ft					
			FAT CLAY (CH), Very Stiff, Brown with limestone fragments	18				
			LEAN CLAY (CL), Very Stiff, Tan, with limestone fragments and ferrous staining	23			29	
			LIMESTONE, Moderately Hard to Hard, Tan, Highly Weathered, vuggy, with calcite deposits and ferrous staining **REC = 33%** **RQD = 0%** **REC = 67%** **RQD = 0%**					
			REC = 13% **RQD = 0%**					
			Boring Terminated					

NOTES:
1. Groundwater not encountered during drilling operations.
2. Borehole backfilled with auger cuttings and bentonite.
3. Approximate Station: STA 135+40

DEPTH DRILLED:	15.0 ft	**DEPTH TO WATER:**	0ry	**PROJ. No.:**	AAA19-110-00
DATE DRILLED:	2/17/2020	**DATE MEASURED:**	2/17/2020	**FIGURE:**	18

NOTE: THESE LOGS SHOULD NOT BE USED SEPARATELY FROM THE PROJECT REPORT

STATE OF TEXAS
RICHARD T. SHIMONO
135020
LICENSED
PROFESSIONAL ENGINEER

4/05/2023

WYOMING SPRINGS
SEGMENT 1
ROUND ROCK, TX

ROUND ROCK, TEXAS

RABA KISTNER
TBPE Firm Registration No. F-3257

Revision No.	Date	Description

100% SUBMITTAL

Project No.:	36179
Issued:	3/15/2023
Drawn By:	QBH
Checked By:	RJW
Scale:	

Sheet Title
MSE WALL
BORING LOGS
SHEET 02 OF 03

144
Sheet Number

LOG OF BORING NO. RW-5

Wyoming Springs Drive Segment 1
From Creek Bend Boulevard to Sam Bass Road
Williamson County, Texas

RABA KISTNER
TBPE Firm Registration No. F-3257

DRILLING METHOD: Straight Flight Auger & NX Core
LOCATION: N 30.5234B; W 97.72062

SURFACE ELEVATION: 756 ft

DEPTH, FT	DESCRIPTION OF MATERIAL	BLOWS PER FT	UNIT DRY WEIGHT, pcf	PLASTICITY INDEX	% -200
0	**FAT CLAY (CH),** Very Stiff to Hard, Brown to Reddish-Brown, with calcareous deposits		100		
5	- with limestone fragments below 4 ft			46	
	LIMESTONE, Hard, Tan, Highly Weathered, vuggy				
	REC = 39% **RQD = 18%**				
10	**REC = 48%** **RQD = 7%**				
15	Boring Terminated				
	NOTES: 1. Groundwater not encountered during drilling operations. 2. Borehole backfilled with auger cuttings and bentonite. 3. Approximate Station: STA 127+90				
20					
25					

SHEAR STRENGTH, TONS/FT² (0.5 1.0 1.5 2.0 2.5 3.0 3.5 4.0)
PLASTIC LIMIT / WATER CONTENT / LIQUID LIMIT (10 20 30 40 50 60 70 80)

DEPTH DRILLED:	15.0 ft	**DEPTH TO WATER:**	Dry	**PROJ. No.:**	AAA19-110-00
DATE DRILLED:	2/17/2020	**DATE MEASURED:**	2/17/2020	**FIGURE:**	19

NOTE: THESE LOGS SHOULD NOT BE USED SEPARATELY FROM THE PROJECT REPORT

LOG OF BORING NO. RW-6

Wyoming Springs Drive Segment 1
From Creek Bend Boulevard to Sam Bass Road
Williamson County, Texas

RABA KISTNER
TBPE Firm Registration No. F-3257

DRILLING METHOD: Straight Flight Auger & NX Core
LOCATION: N 30.52297; W 97.72043

SURFACE ELEVATION: 760 ft

DEPTH, FT	DESCRIPTION OF MATERIAL	BLOWS PER FT	UNIT DRY WEIGHT, pcf	PLASTICITY INDEX	% -200
0	**TOPSOIL** (6 inches)	ref/4"			
	LIMESTONE, Moderately Hard to Hard, Light Tan, Highly to Moderately Weathered, with ferrous staining	ref/1"			
5	- brown from 6 to 7 ft **REC: 79%** **RQD: 41%** **UC = 191 tsf**		136		
10	**REC: 90%** **RQD: 15%**				
15	Boring Terminated				
	NOTES: 1. Groundwater not encountered during drilling operations. 2. Borehole backfilled with auger cuttings and bentonite. 3. Approximate Station: STA 126+00				
20					
25					

SHEAR STRENGTH, TONS/FT² (0.5 1.0 1.5 2.0 2.5 3.0 3.5 4.0)
PLASTIC LIMIT / WATER CONTENT / LIQUID LIMIT (10 20 30 40 50 60 70 80)

DEPTH DRILLED:	15.0 ft	**DEPTH TO WATER:**	Dry	**PROJ. No.:**	AAA19-110-00
DATE DRILLED:	2/17/2020	**DATE MEASURED:**	2/17/2020	**FIGURE:**	20

NOTE: THESE LOGS SHOULD NOT BE USED SEPARATELY FROM THE PROJECT REPORT

STATE OF TEXAS
RICHARD T SHIMONO
135020
LICENSED
PROFESSIONAL ENGINEER

4/05/2023

WYOMING SPRINGS
SEGMENT 1
ROUND ROCK, TX

ROUND ROCK, TEXAS

RABA KISTNER
TBPE Firm Registration No. F-3257

Revision No.	Date	Description

100% SUBMITTAL

Project No.:	36179
Issued:	3/15/2023
Drawn By:	QBH
Checked By:	RJW
Scale:	

Sheet Title
MSE WALL
BORING LOGS
SHEET 03 OF 03

145
Sheet Number

DISCLAIMER:
The use of this standard is governed by the "Texas Engineering Practice Act". No warranty of any kind is made by TxDOT for any purpose whatsoever. TxDOT assumes no responsibility for the conversion of this standard to other formats or for incorrect results or damages resulting from its use.

DATE: 4/4/2023 4:23:56 PM
FILE: c:\pw-af\pw-af-prod\mack.davis@aguirre-fields.com\d0226428\RW(MSE) (MOD).dgn

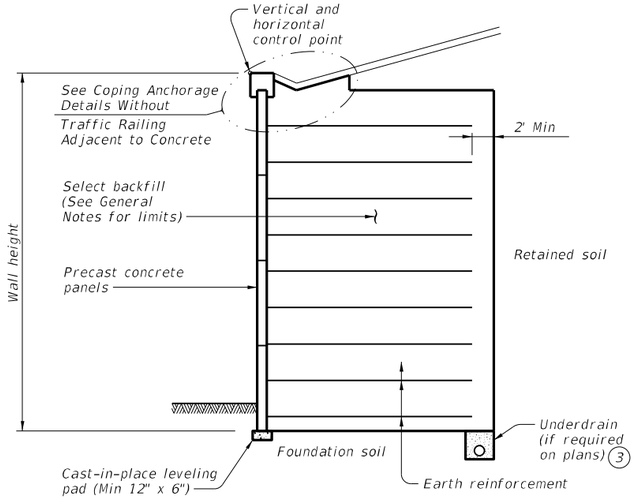

TYPICAL SECTION

(Wall at bottom of slope.)

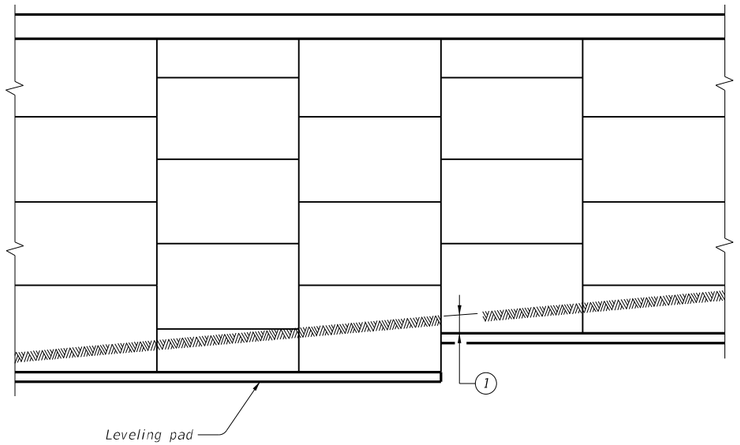

ELEVATION

1. Minimum embedment conforming to values given on the RW(MSE)DD standard.
2. ~~Form map of Texas emblem into a wall panel next to each bridge abutment. Submit the exact location of each emblem to the Engineer for approval. The cost of forming the emblems will not be paid for directly, but is incidentary to Item 423, "Retaining Walls." Inset the map of Texas a minimum of ¾" into the face of the panel with a smooth finish. Finish the inset area in a contrasting color as approved by the Engineer.~~
   See Aesthetic Details sheets for rail, City of Round Rock logo, form liner, material, and color notes.
3. Provide underdrain pipe and filter material in accordance with Item 556, "Pipe Underdrains."
4. Anchor precast coping to prevent rotation or displacement. Use these details to develop custom anchorage for precast copings. Provide details that include coping reinforcement. Concrete flume (if required) is paid for separately from Item 423, "Retaining Walls."

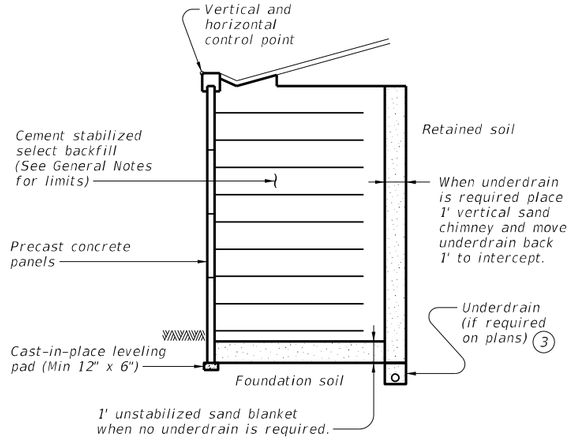

SPECIAL DRAINAGE PROVISIONS

(When cement stabilized backfill is used.)

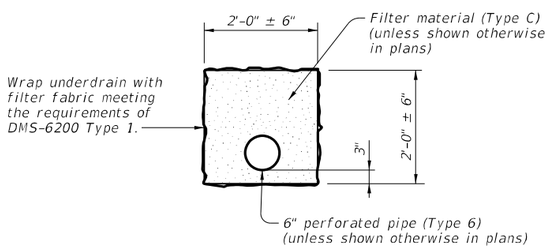

UNDERDRAIN DETAIL 3

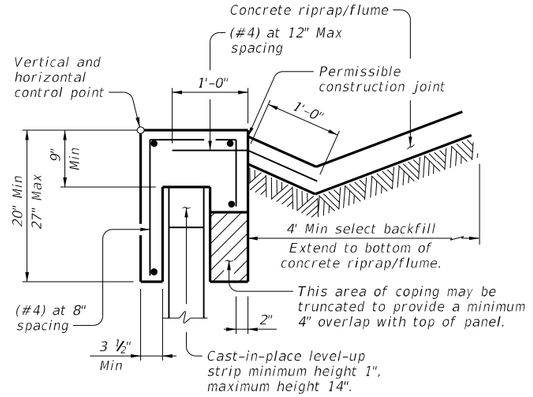

ADJACENT TO CONCRETE

(Excluding concrete pavement)

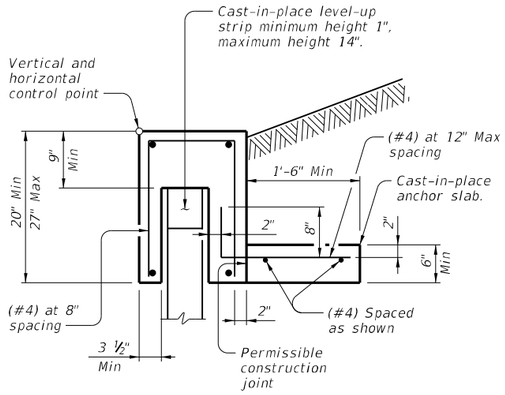

ADJACENT TO SOIL

COPING ANCHORAGE DETAILS WITHOUT TRAFFIC RAILING 4

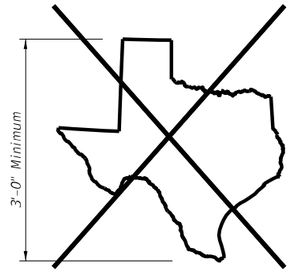

MAP OF TEXAS EMBLEM 2

AGUIRRE & FIELDS, LP
TBPELS FIRM REGISTRATION #739
4/17/2023

STATE OF TEXAS
MACK DAVIS
119955
LICENSED PROFESSIONAL ENGINEER

MOD 03-23: AESTHETICS NOTES MODIFIED

SHEET 1 OF 2

Texas Department of Transportation

Bridge Division Standard

MECHANICALLY STABILIZED EARTH RETAINING WALL

RW(MSE) (MOD)

FILE: RW-MSE-22.dgn	DN: TxDOT	CK: TxDOT	DW: QBH	CK: CMD
©TxDOT June 2022	CONT	SECT	JOB	HIGHWAY
REVISIONS				WYM SPR
	DIST	COUNTY		SHEET NO.
		WILLIAMSON		146

DISCLAIMER:
The use of this standard is governed by the "Texas Engineering Practice Act". No warranty of any kind is made by TxDOT for any purpose whatsoever. TxDOT assumes no responsibility for the conversion of this standard to other formats or for incorrect results or damages resulting from its use.

DATE: 4/4/2023 4:23:57 PM
FILE: c:\pw-af\pw-af-prod\mack.davis@aguirre-fields.com\d0226428\RW(MSE) (MOD).dgn

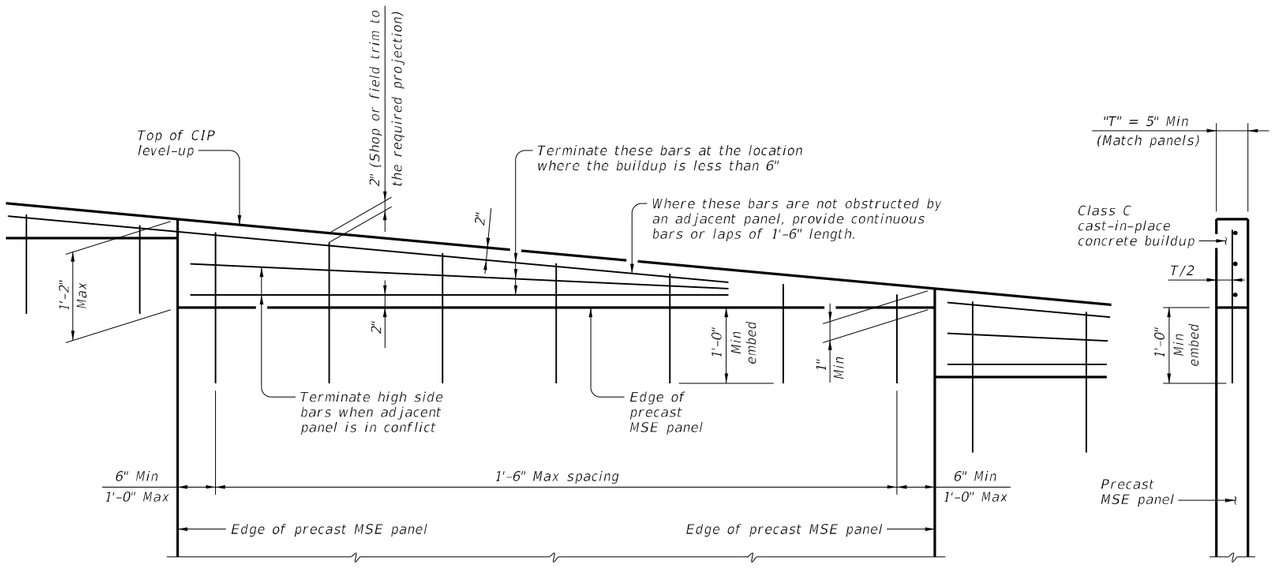

ELEVATION SECTION

LEVEL UP DETAIL (5)

(5) Cast vertical bars into the top of panels. At Contractor's option vertical bars may be embedded 4 inches with a Type III Class C epoxy anchorage system. Follow manufacturer's directions for installing the epoxy vertical bars.

(6) Soil design parameters must be based on long term soil strength. Design parameters must be listed on the RW(MSE)DD standard.

(7)

SELECT BACKFILL UNIT WEIGHT			
Type AS, BS & DS	Unit Weight	Internal Stability	External Stability
	105 PCF	Pullout	Sliding, Overturning, Eccentricity
	125 PCF	Rupture	Bearing

DESIGN CRITERIA NOTES:

Design Parameters:

Base design of retaining walls on the following design parameters unless stated elsewhere in the plans:

Retained Soil	Unit Weight = 125 pcf ϕ = (6) C = 0 psf
Foundation Soil	ϕ = (6) C = 0 psf
Select Backfill	Unit Weight = See Table (7) ϕ = 34° C = 0 psf
Cement Stabilized Select Backfill	Unit Weight = 125 pcf ϕ = 45° C = 0 psf

Limit stress in steel and concrete in accordance with current AASHTO Standard Specifications for Highway Bridges and Interim Specifications.

The minimum length of earth reinforcement are as shown on the Mechanically Stabilized Earth Retaining Wall Design Data (RW[MSE]DD) standard.

Stability Criteria:

Stability criteria applies to both dry and drawdown analysis. Base design on the following factors of safety.

Sliding along the base of the structure	Factor of Safety ≥ 1.5
Overturning	Factor of Safety ≥ 2.0
Pullout of Earth Reinforcement at each level	Factor of Safety ≥ 1.5

Design the wall such that the base pressure resultant falls within the middle third of the retaining wall.

Determine pullout resistance from test data evaluated at ¾ inch strain.

Corrosion Criteria:

Design the earth reinforcement elements to have a minimum design life of 75 years, using current AASHTO corrosion rates.

Perform stress calculations (rupture) on the calculated earth reinforcement section remaining after 75 years. Pullout calculations may be based on non-corroded section.

PRECAST COPINGS:

Wall supplier is to maximize lengths of precast coping. Provide precast coping in 10-foot minimum lengths (typical.) To optimize coping lengths at radiuses, ends of runs, or other wall geometric conditions favorable to shorter coping sections, shorter lengths may be used pending approval by the Engineer. This applies only to coping without railing.

JOINT SEALANT:

Seal joints between coping segments in accordance with Item 438, "Cleaning and Sealing Joints." Provide Class 4 joint seal. Place sealant flush with coping surface. The purpose of the joint sealing is to reduce surface drainage infiltration into the retaining wall backfill. Sealing coping joint is considered subsidiary to other items.

EARTH REINFORCEMENT:

Place the uppermost earth reinforcement no more than 3 feet below the top of wall.

Place the lowest level of earth reinforcement no more than 2 feet above the top of the leveling pad.

Provide earth reinforcement with a minimum wire size of W7.0. If different longitudinal and cross wires are used in an earth reinforcement mesh, the smaller wire must be at least 50% of the cross sectional area of the larger wire.

A maximum of four wire mesh configurations (wire sizes) will be allowed on a project. Provide unique transverse bar spacing for each mesh configuration, differing from other configurations by a minimum of 3 inches. Step earth reinforcement lengths in increments no finer than 12 inches.

PANELS:

Fabricate standard precast concrete panels to a maximum height of 6 feet and a maximum surface area of 50 sq ft. Top and bottom panels may exceed these limitations as necessary to achieve required wall grades. Maximum height of any panel must not exceed 7 ft.-6 in. Provide a minimum panel thickness of 5 inches. Arrange panels to provide offset horizontal joints.

Provide an open joint around the perimeter of the concrete panels. Configure joints such that 1) the filter fabric and/or pad materials are not exposed at the wall face and 2) the design opening is between ⅜" and ¾".

Provide a one-piece corner panel for wall angle changes of greater than 30 degrees. Butting of chamfered panels will be allowed for angle changes of 30 degrees or less.

MATERIAL NOTES:

Provide Class C concrete for reinforced concrete and precast coping.
Provide Class H concrete for precast concrete panels.
Provide Class A concrete for unreinforced concrete.
Provide Grade 60 reinforcing steel.

GENERAL NOTES:

Section and elevation shown is for informational purposes only. Determine specific geometry based on wall layouts and other plan information.

Extend select backfill specified for use within the mechanically stabilized earth volume horizontally from the back of the panels a minimum 2 feet beyond the end of the earth reinforcement. Extend select backfill vertically to the top of the panels from either the top of the leveling pad, or from 4 inches below the lowest earth reinforcement, whichever is lower.

Provide concrete coping along the top of wall, at the vertical steps at bridge backwalls, and at other vertical steps along the top of wall.

Provide details and calculations that establish support for panels that are affected when obstructions (inlets, drilled shafts, piling, etc.) prevent placement of soil reinforcement in their normal locations. Furnish the same earth reinforcement coverage as that required in the absence of the obstruction. For skewed (rotated) earth reinforcement, no adjustment in length is needed for skew angles less than or equal to 10 degrees. Adjust the length of earth reinforcement to provide a cosine length of the reinforcement equivalent to the stated design length for the section of wall when skew angles are greater than 10 degrees. Provide calculations that justify any alterations made to the soil reinforcement or modifications to their normal placement. Do not use panels without any soil reinforcement connected to them unless they are connected with galvanized hardware to adjacent panels which do have supporting soil reinforcement attached to them and as approved by the Engineer.

Coping and anchor slabs are considered subsidiary to the Item 423, "Retaining Walls."

Use these details in conjunction with the retaining wall layout, the Mechanically Stabilized Earth Retaining Wall Design Data (RW[MSE]DD) standard and other applicable standards.

Cover dimensions are clear dimensions, unless noted otherwise.

AGUIRRE & FIELDS, LP
TBPELS FIRM REGISTRATION #739
4/17/2023

STATE OF TEXAS
MACK DAVIS
119955
LICENSED PROFESSIONAL ENGINEER
Mack Davis

MOD 03-23: AESTHETICS NOTES MODIFIED

Texas Department of Transportation

Bridge Division Standard

MECHANICALLY STABILIZED EARTH RETAINING WALL

RW(MSE) (MOD)

FILE: RW-MSE-22.dgn	DN: TxDOT	CK: TxDOT	DW: QBH	CK: CND
©TxDOT June 2022	CONT	SECT	JOB	HIGHWAY
REVISIONS				WYM SPR
	DIST	COUNTY		SHEET NO.
		WILLIAMSON		147

DISCLAIMER:
The use of this standard is governed by the "Texas Engineering Practice Act". No warranty of any kind is made by TxDOT for any purpose whatsoever. TxDOT assumes no responsibility for the conversion of this standard to other formats or for incorrect results or damages resulting from its use.

DATE: 4/4/2023 1:54:06 PM
FILE: c:\pw-a1\pw-af-prod\mack.davis@aguirre-fields.com\d0226428\RW(EM).dgn

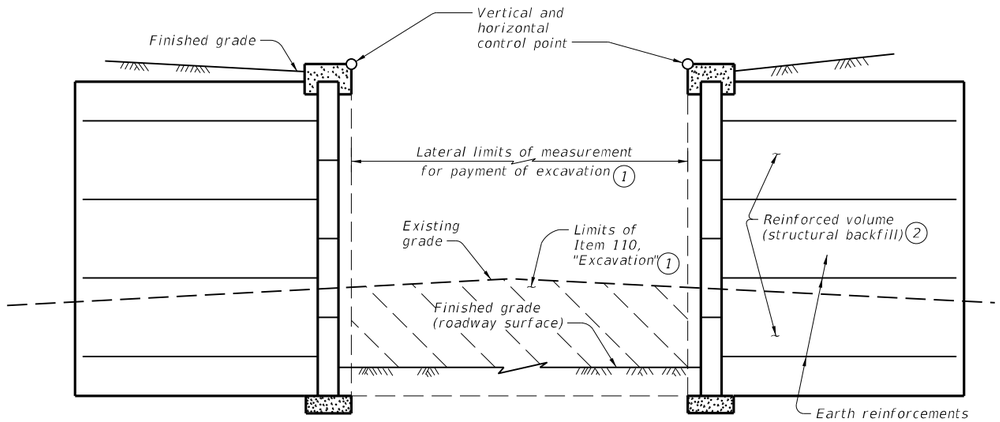

TYPICAL SECTION

(Excavation between MSE retaining walls.) (3)

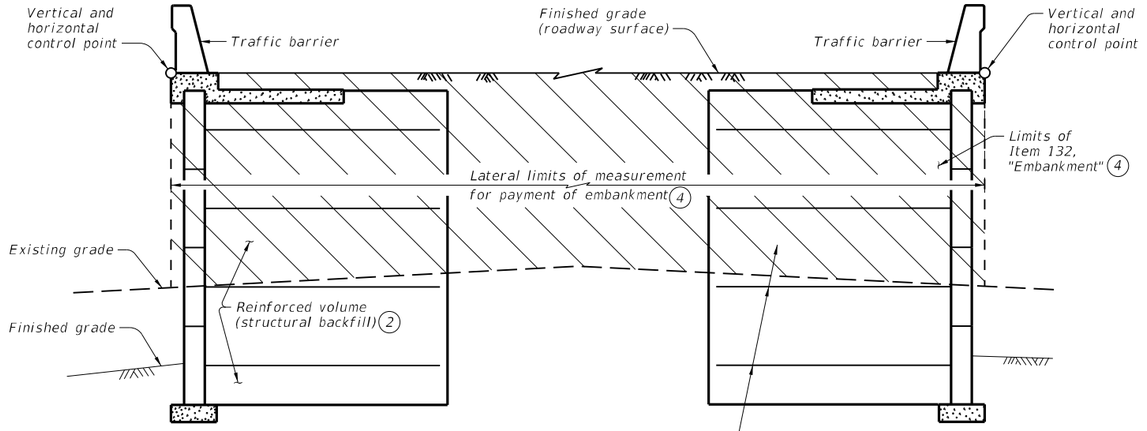

TYPICAL SECTION

(Embankment between MSE retaining walls.) (3)

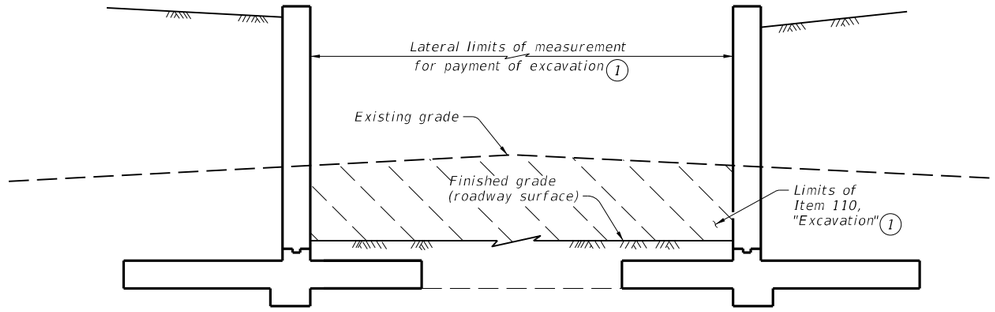

TYPICAL SECTION

(Excavation between conventional retaining walls.)

1. Only the excavation above the proposed subgrade elevation will be measured for payment.
2. Meeting requirements for Item 423, "Retaining Walls."
3. Earthwork measurement with other retaining wall types will be made to the outside finished face in the same manner.
4. Only the embankment above the existing ground line will be measured for payment.

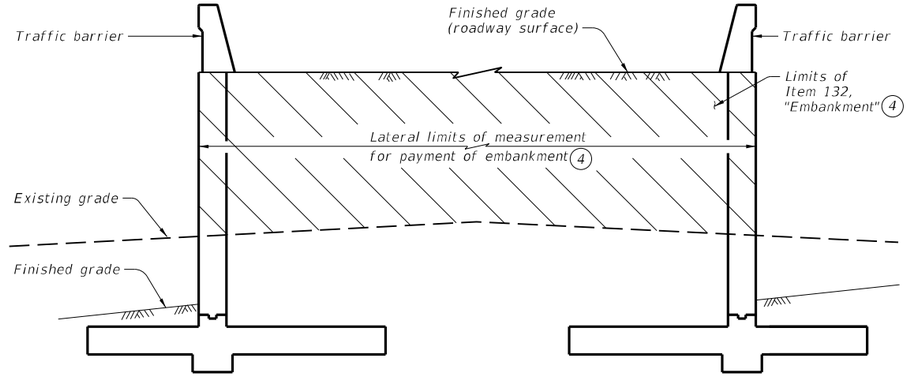

TYPICAL SECTION

(Embankment between conventional retaining walls.)

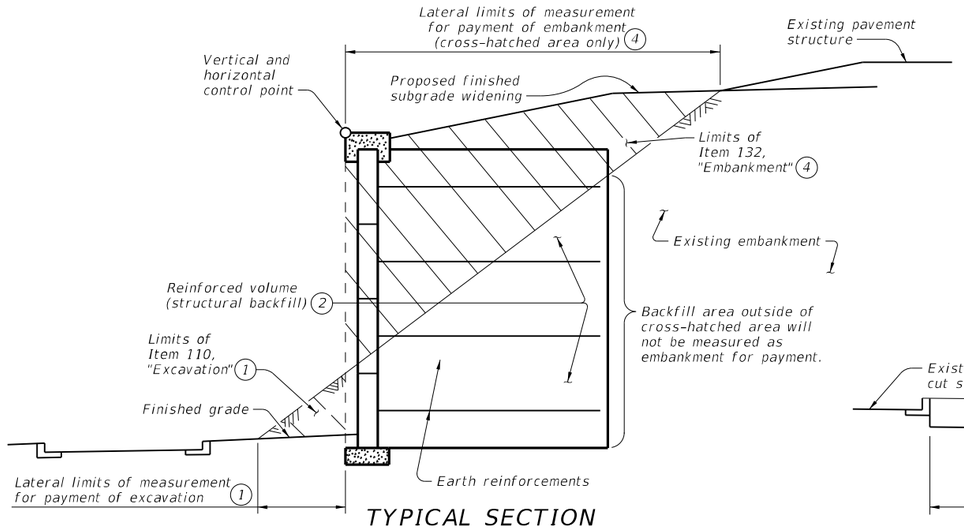

TYPICAL SECTION

(Widening embankment with MSE retaining walls.) (3)

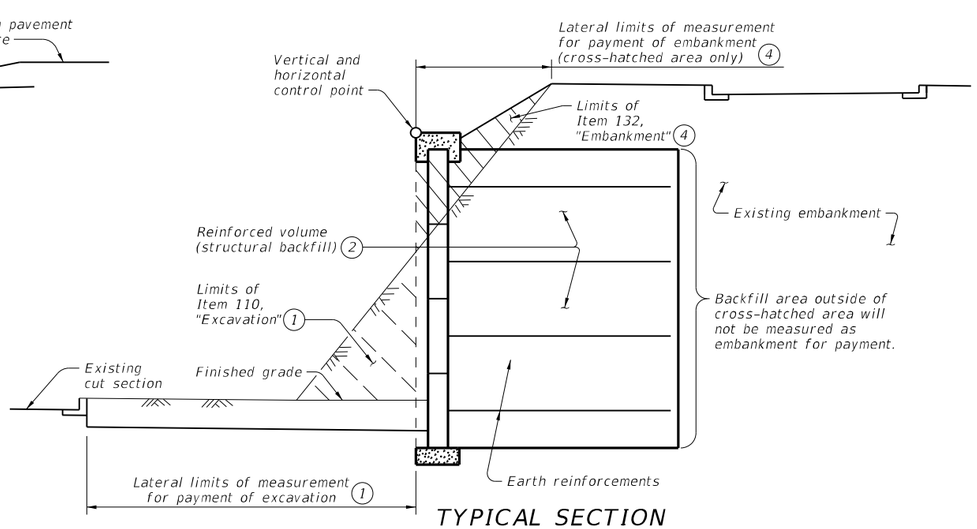

TYPICAL SECTION

(Widening cut section with MSE retaining walls.) (3)

Texas Department of Transportation

Bridge Division Standard

EARTHWORK MEASUREMENT AT RETAINING WALL

RW(EM)

FILE: RW-EM-22.dgn	DN: TxDOT	CK: TxDOT	DW: JER	CK: RLE
©TxDOT June 2022	CONT	SECT	JOB	HIGHWAY
REVISIONS				WYM SPR
	DIST	COUNTY		SHEET NO.
		WILLIAMSON		148

DISCLAIMER:
The use of this standard is governed by the "Texas Engineering Practice Act". No warranty of any kind is made by TxDOT for any purpose whatsoever. TxDOT assumes no responsibility for the conversion of this standard to other formats or for incorrect results or damages resulting from its use.

WALL SUMMARY

MSE Retaining Wall	Begin Station (1)	End Station (1)	Retained Soil Friction Angle (2)	Foundation Soil Friction Angle (2)	Ground Improvement (3)	Min Earth Reinf. Length (4)	Min Wall Embedment (5)	Underdrain Required (6)	Drawdown Analysis (7)	Bench Width (8)
RW1	10+40.29	12+21.01	34°	26.3°	NO	0.7H, 8' MIN	2.0'	YES	YES	2.0'
RW2	10+00.10	11+69.12	34°	26.3°	NO	0.7H, 8' MIN	2.0'	YES	YES	2.0'
RW3	11+69.12	12+63.38	34°	26.3°	NO	0.7H, 8' MIN	2.0'	YES	YES	2.0'
RW4	12+63.38	14+33.69	34°	26.3°	NO	0.7H, 8' MIN	2.0'	YES	YES	2.0'
RW5	10+25.05	12+21.80	34°	26.3°	NO	0.7H, 8' MIN	2.0'	YES	YES	2.0'
RW6	12+21.80	13+15.96	34°	26.3°	NO	0.7H, 8' MIN	2.0'	YES	YES	2.0'
RW7	13+15.96	15+21.87	34°	26.3°	NO	0.7H, 8' MIN	2.0'	YES	YES	2.0'
RW8	10+47.67	11+15.65	34°	26.3°	NO	0.7H, 8' MIN	2.0'	YES	YES	2.0'
RW9	11+15.65	12+59.51	34°	26.3°	NO	0.7H, 8' MIN	2.0'	YES	YES	2.0'
RW10	12+59.51	13+45.32	34°	26.3°	NO	0.7H, 8' MIN	2.0'	YES	YES	2.0'
RW11	10+36.19	11+82.21	34°	26.3°	NO	0.7H, 8' MIN	2.0'	YES	NO	2.0'
RW12	11+82.21	13+01.57	34°	26.3°	NO	0.7H, 8' MIN	2.0'	YES	NO	2.0'
RW13	13+01.57	14+10.08	34°	26.3°	NO	0.7H, 8' MIN	2.0'	YES	NO	2.0'

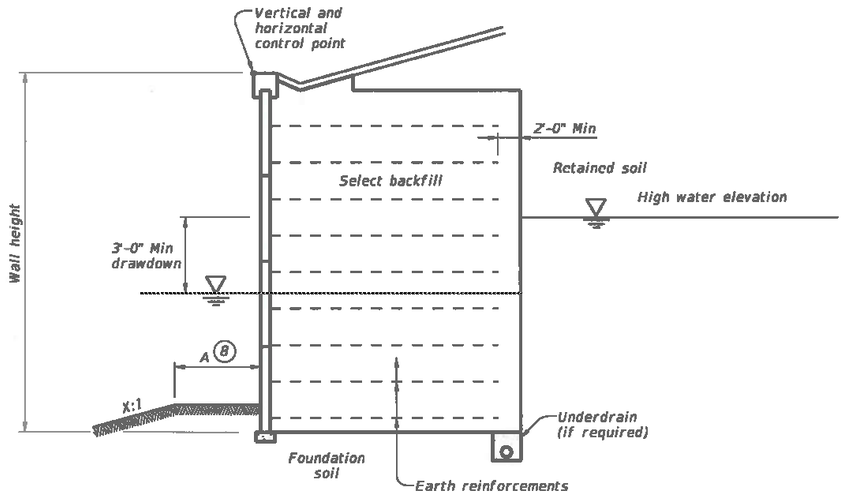

TYPICAL SECTION
(Rapid drawdown condition.)

(1) Indicate limits for which the stated soil design requirements and assumptions are applicable.

(2) Base the listed retained and foundation friction angle on local experience or measured/correlated long term strength values.

(3) Indicate if ground improvement is required or not required. If shown as required, refer to ground improvement detail(s) shown elsewhere in the plans for additional information.

(4) Indicate on table both the minimum length and length ratio required. The minimum default length of earth reinforcements is either 8 feet or 70% of the wall height, whichever is greater. Wall height and design wall height may differ depending on project geometry and loading conditions. Note: Wall height at bridge abutments is equal to the distance between the top of leveling pad and finished grade at the bridge abutment backwall.

(5) Guidance to wall designer of record for determination of minimum wall embedment. Unless noted elsewhere in the plans, provide a minimum embedment from the top of leveling pad to finish grade of
- 1 foot for level ground where there is no potential for erosion or future excavation, or
- 2 feet for sloping ground (4.0H:1.0V or steeper) or where there is potential for removal of soil in front of the wall.

(6) Indicate if underdrain is required or not required.

(7) Indicate if rapid drawdown analysis is required.

(8) Horizontal bench width at base of wall varies. Use the following criteria to establish base width:
A = 2-foot Min for X > 4 or
A = 4-foot Min for X ≤ 4
Applicable to both drawdown and dry condition.

SPECIAL NOTES:
This sheet is to be filled out by the wall designer of record at time of plan preparation to provide soil strength parameters for the design of the specified walls.
The completed sheet must be signed, sealed, and dated by a licensed Professional Engineer.

STATE OF TEXAS
RICHARD T SHIMONO
135020
LICENSED
PROFESSIONAL ENGINEER

4/05/2023

Texas Department of Transportation | Bridge Division Standard

MECHANICALLY STABILIZED EARTH RETAINING WALL DESIGN DATA

RW(MSE)DD

FILE: RW-MSEDD-22.dgn	DN: TxDOT	CK: RLE	DW: JER	CK: RLE
©TxDOT June 2022	CONT	SECT	JOB	HIGHWAY
REVISIONS				WYM SPR
	DIST	COUNTY		SHEET NO
		WILLIAMSON		149

DATE: 3/15/2023 10:00:00 AM
FILE: c:\pw-af\pw-af-prod\mack.davis@aguirre-fields.com\d0226428\RW(MSE)DD.dgn

DISCLAIMER:
The use of this standard is governed by the "Texas Engineering Practice Act". No warranty of any kind is made by TxDOT for any purpose whatsoever. TxDOT assumes no responsibility for the conversion of this standard to other formats or for incorrect results or damages resulting from its use.

DATE: 4/4/2023 1:54:17 PM
FILE: c:\pw-at\pw-ar-prod\mack.davis@aguirre-fields.com\d0226428\RW(TRF).dgn

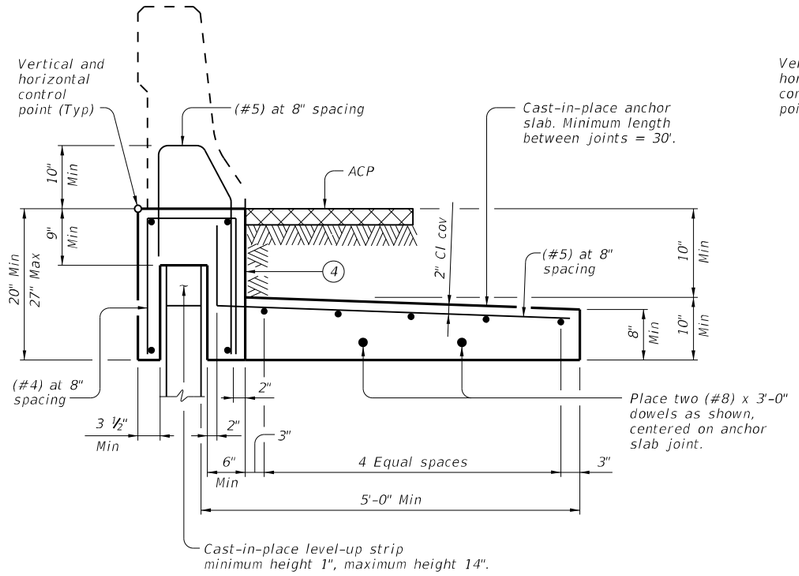

"WIDE BASED" ADJACENT TO ACP

(Showing T551 Rail, other rails listed similar.)

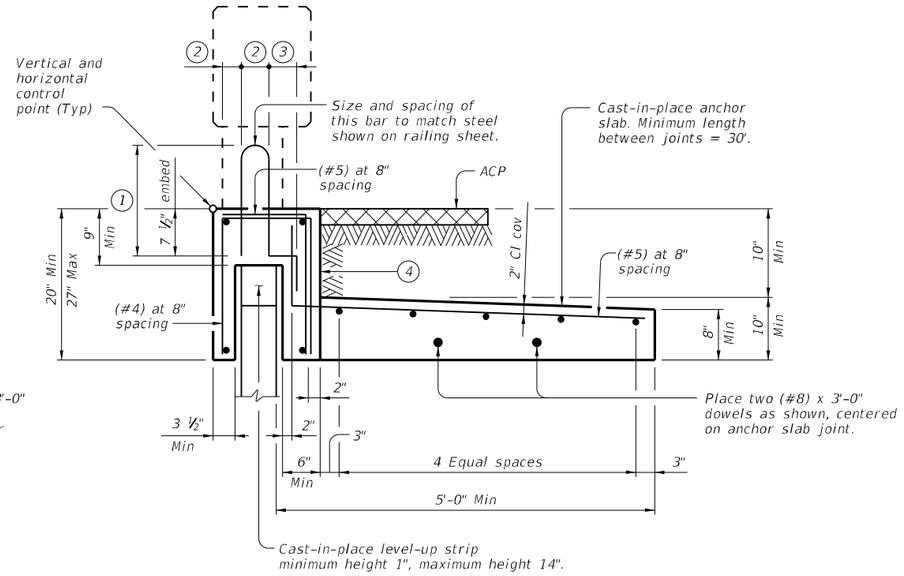

"NARROW BASED" ADJACENT TO ACP

(Showing T223 Rail, other rails listed similar.)

(1) Reinforcement length equal to length shown on the appropriate rail standard plus 1 inch.

(2) Match dimension on the appropriate rail standard.

(3) Match dimension on the appropriate rail standard. Bend end of rail anchorage reinforcing as shown as required to maintain clear cover.

(4) See "Coping Joint Sealer Details."

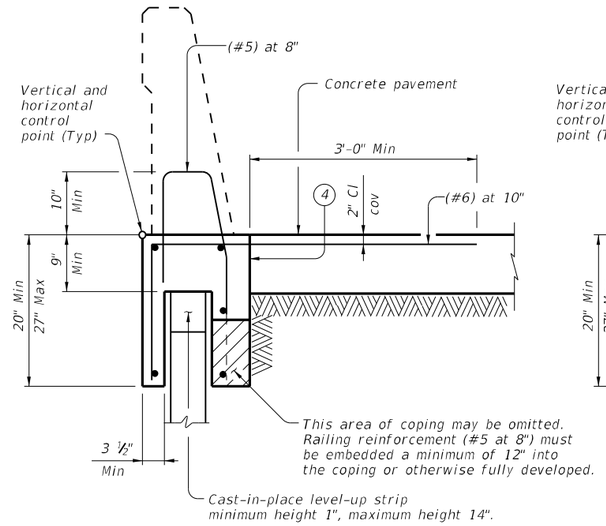

"WIDE BASED" ADJACENT TO CONCRETE PAVEMENT

(Showing SSTR Rail, other rails listed similar.)

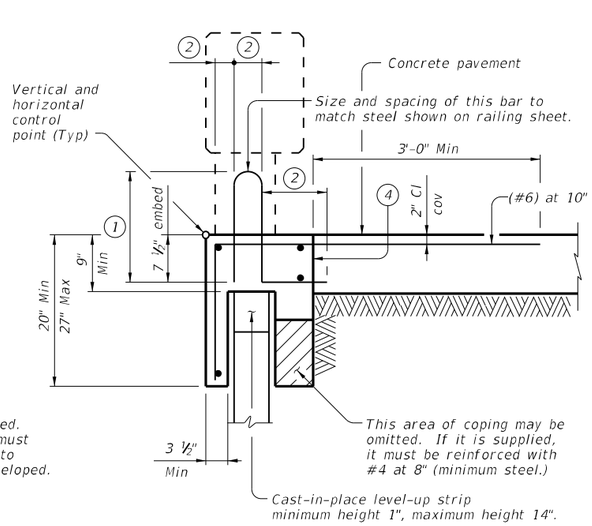

"NARROW BASED" ADJACENT TO CONCRETE PAVEMENT

(Showing T223 Rail, other rails listed similar.)

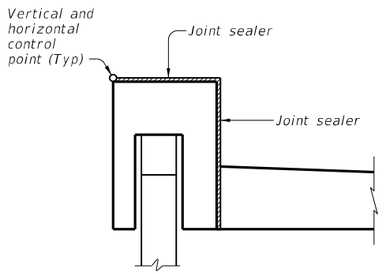

ADJACENT TO ACP

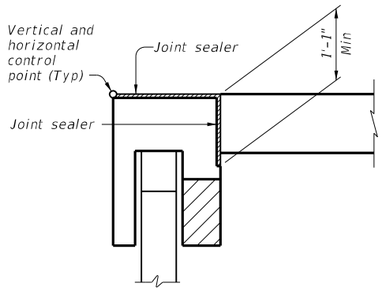

ADJACENT TO CONCRETE PAVEMENT

COPING JOINT SEALER DETAILS

(Reinforcing steel not shown for clarity.)

Rail Type	Detail	Precasting Rail with Coping Allowed
T1F/T1W/C1W/T2P/C2P	NARROW	NO
T221/C221/T222	NARROW	YES
T223/C223	NARROW	NO
T402/C402	NARROW	NO
T411/C411	NARROW	NO
T551/T552	WIDE	YES
T66	NARROW	NO
SSTR	WIDE	YES

CAST-IN-PLACE COPINGS:

Provide compressible material to isolate precast panel from cast-in-place coping to prevent cracking. Attach compressible material to both sides of precast panel prior to casting concrete for coping.

When cast-in-place coping is anchored to reinforced concrete pavement, provide a smooth level-up strip on the top of the precast panels. The purpose of the level-up is to allow the pavement and coping to move longitudinally relative to the wall without causing damage.

Align coping and railing joints with precast panel joints. Optional rail joints are allowed as approved by Engineer. Provide railing construction joints or expansion joints at 100-foot maximum spacing.

PRECAST COPINGS:

Provide a smooth level-up strip on top of the precast panels prior to installation of the coping. Shims may be used on top of level-up strips to facilitate alignment. Total shim thickness not to exceed 1 inch.

Provide precast coping in 10-foot minimum lengths.

JOINTED CONCRETE PAVEMENT:

When coping is adjacent to and anchored into jointed concrete pavement, align the coping joints with the pavement joints.

JOINT SEALANT:

Seal joints between coping segments in accordance with Item 438, "Cleaning and Sealing Joints." Provide Class 4 joint seal. Place sealant flush with coping surface. The purpose of the joint sealing is to reduce surface drainage infiltration into the retaining wall backfill. Sealing coping joint is considered subsidiary to other items.

MATERIAL NOTES:

Provide Class C concrete (f'c=3,600 psi.)
Provide Grade 60 reinforcing steel.
Provide #4 longitudinal bars, unless otherwise shown.

GENERAL NOTES:

Details on this sheet are to be used in development of specific details for mounting traffic railing on mechanically stabilized earth (MSE) walls.

The specific details proposed must have strengths equivalent to those shown on this sheet and must be submitted for approval. Areas of particular importance are the connection of the coping to the railing, the strength of the vertical coping leg connecting the railing to the anchor slab, and the connection of the coping to the anchor slab or concrete pavement.

Submit shop drawings for the traffic railing foundations to the Engineer in accordance with Item 423, "Retaining Walls." The shop drawings must include bar bending details.

Precasting of railing with the coping will be allowed as noted in the table on this sheet.

The Contractor's attention is directed to the fact that various configurations of precast coping/railing combinations are covered by patent. The Contractor must provide for use of these systems in accordance with Article 7.5.

Coping and anchor slabs are considered subsidiary to Item 423, "Retaining Walls." Payment for traffic railing is per the linear foot for the appropriate railing type.

Cover dimensions are clear dimensions, unless noted otherwise.

Texas Department of Transportation

Bridge Division Standard

RETAINING WALL TRAFFIC RAILING FOUNDATIONS

RW(TRF)

FILE: RW-TRF-22.dgn	DN: TxDOT	CK: TxDOT	DW: JTR	CK: TAR
©TxDOT June 2022	CONT	SECT	JOB	HIGHWAY
REVISIONS				WYM SPR
	DIST	COUNTY		SHEET NO.
		WILLIAMSON		150

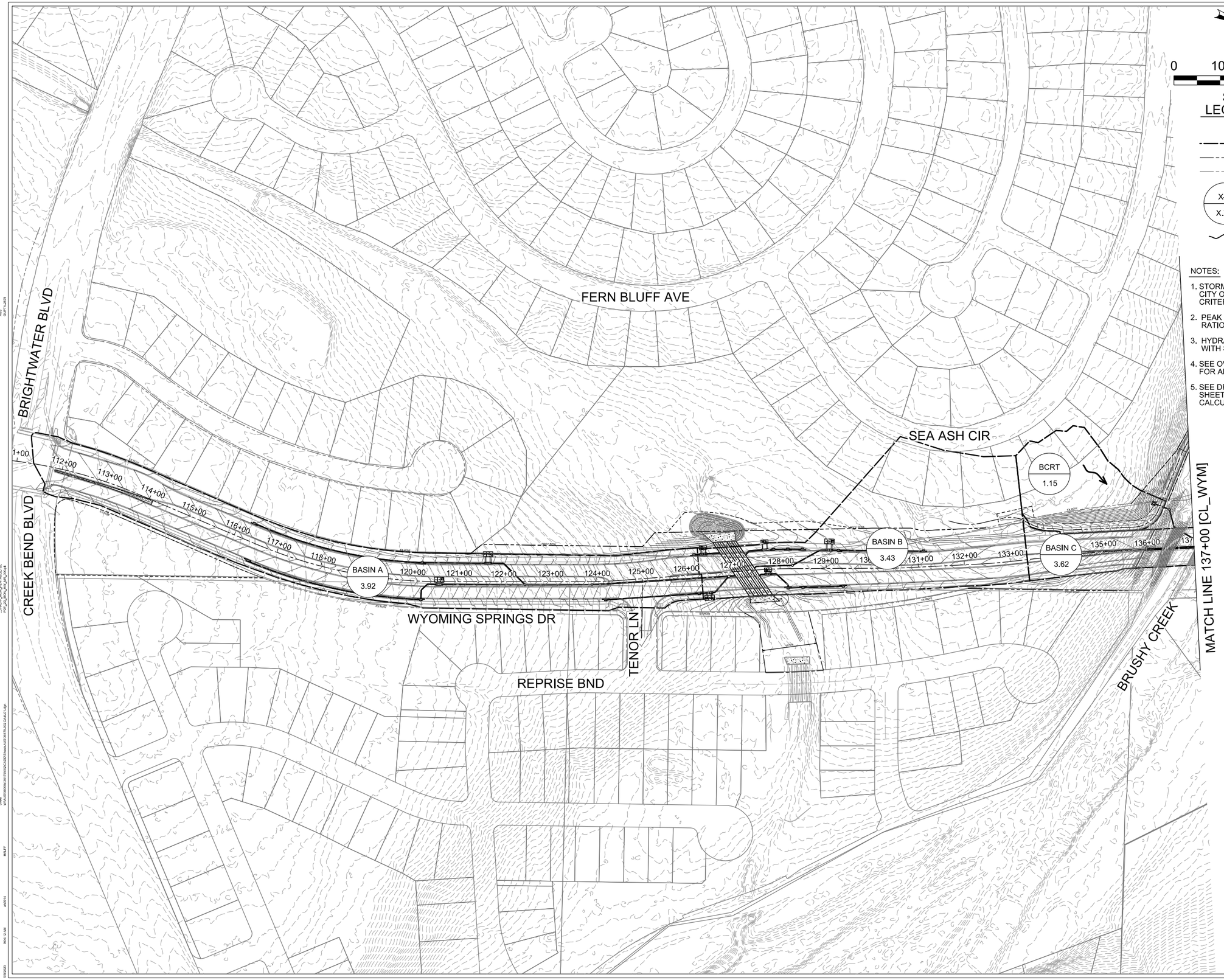

NOTES:

1. STORM RUNOFF CALCULATIONS PER CITY OF ROUND ROCK DRAINAGE CRITERIA MANUAL.
2. PEAK FLOWS COMPUTED USING RATIONAL METHOD.
3. HYDRAULIC COMPUTATIONS PERFORMED WITH STORMCAD 10.03.01.08.
4. SEE OVERALL DRAINAGE AREA MAP FOR ADDITIONAL INFORMATION.
5. SEE DRAINAGE CALCULATION SHEETS FOR BASIN RUNOFF CALCULATIONS.

WYOMING SPRINGS
SEGMENT 1
ROUND ROCK, TX

ROUND ROCK TEXAS

halff
13620 BRANTWICK DR
BLDG C, STE 100
AUSTIN, TX 78729
(512) 777-4800
TBPELS FIRM #312

Revision No.	Date	Description

F-312 4/5/23
STATE OF TEXAS
JEFFREY L. NAGY
133255
LICENSED
PROFESSIONAL ENGINEER

100% SUBMITTAL

Project No.:	36179.002
Issued:	5/9/2023
Drawn By:	SG
Checked By:	JN
Scale:	1"=200'

Sheet Title
OVERALL
DRAINAGE AREA MAP
(1 OF 3)

151
Sheet Number

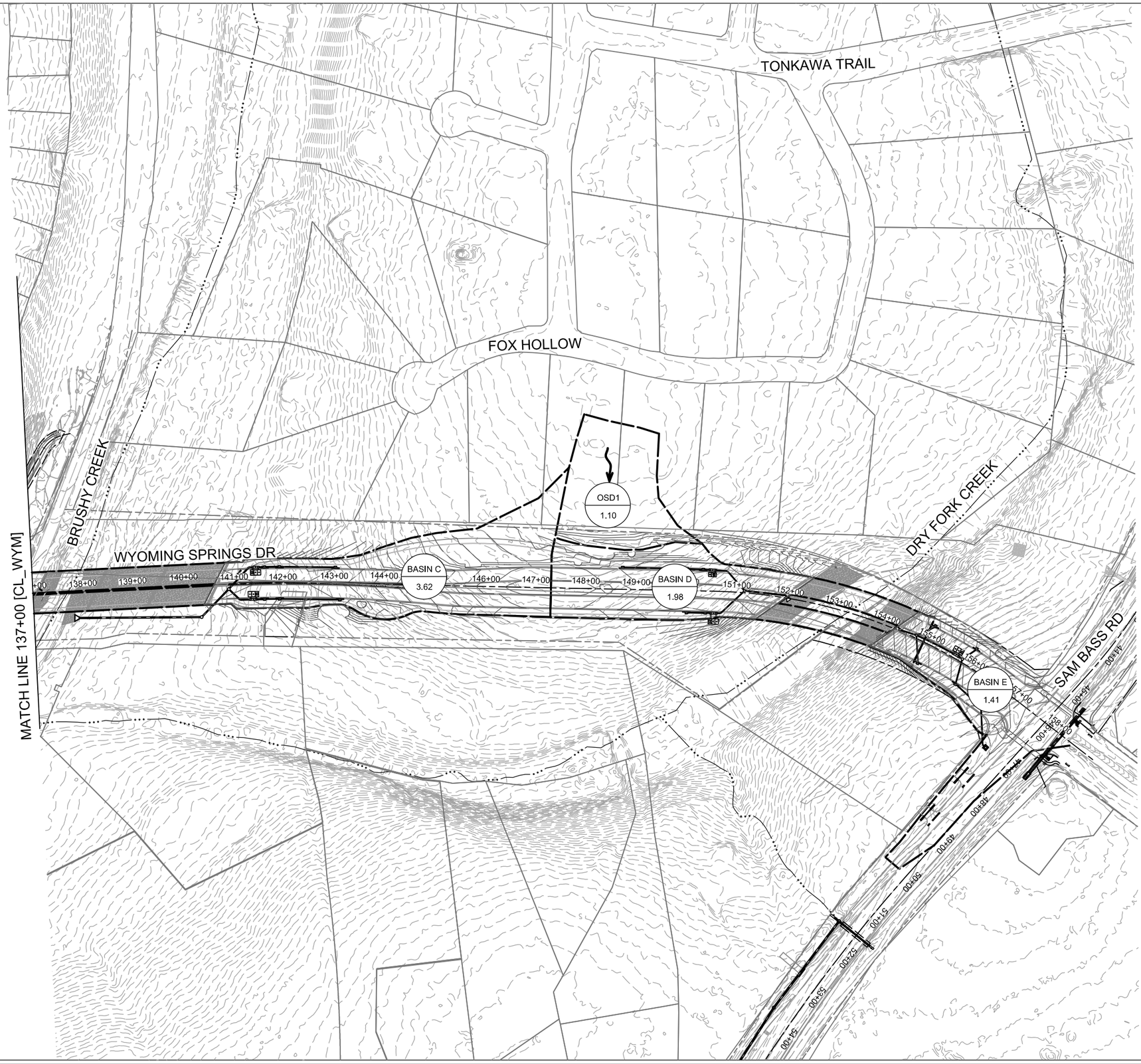

0 100 200 300 400

SCALE: 1"=200'

N

LEGEND

- DRAINAGE AREA BOUNDARY
- PROPOSED ROW
- EXISTING ROW
- X-X / X.XX — AREA ID / DRAINAGE AREA IN ACRES
- OVERLAND FLOW DIRECTION

NOTES:

1. STORM RUNOFF CALCULATIONS PER CITY OF ROUND ROCK DRAINAGE CRITERIA MANUAL.
2. PEAK FLOWS COMPUTED USING RATIONAL METHOD.
3. HYDRAULIC COMPUTATIONS PERFORMED WITH STORMCAD 10.03.01.08.
4. SEE OVERALL DRAINAGE AREA MAP FOR ADDITIONAL INFORMATION.
5. SEE DRAINAGE CALCULATION SHEETS FOR BASIN RUNOFF CALCULATIONS.

WYOMING SPRINGS
SEGMENT 1
ROUND ROCK, TX

ROUND ROCK TEXAS

halff
13620 BRANTWICK DR
BLDG C, STE 100
AUSTIN, TX 78729
(512) 777-4600
TBPELS FIRM #312

Revision No.	Date	Description

F-312 8/14/23
STATE OF TEXAS
JEFFREY L. NAGY
133255
LICENSED PROFESSIONAL ENGINEER

100% SUBMITTAL

Project No.:	36179.002
Issued:	8/24/2023
Drawn By:	SG
Checked By:	JN
Scale:	1"=200'

Sheet Title
OVERALL DRAINAGE AREA MAP (2 OF 3)

152
Sheet Number

MAJOR BASINS

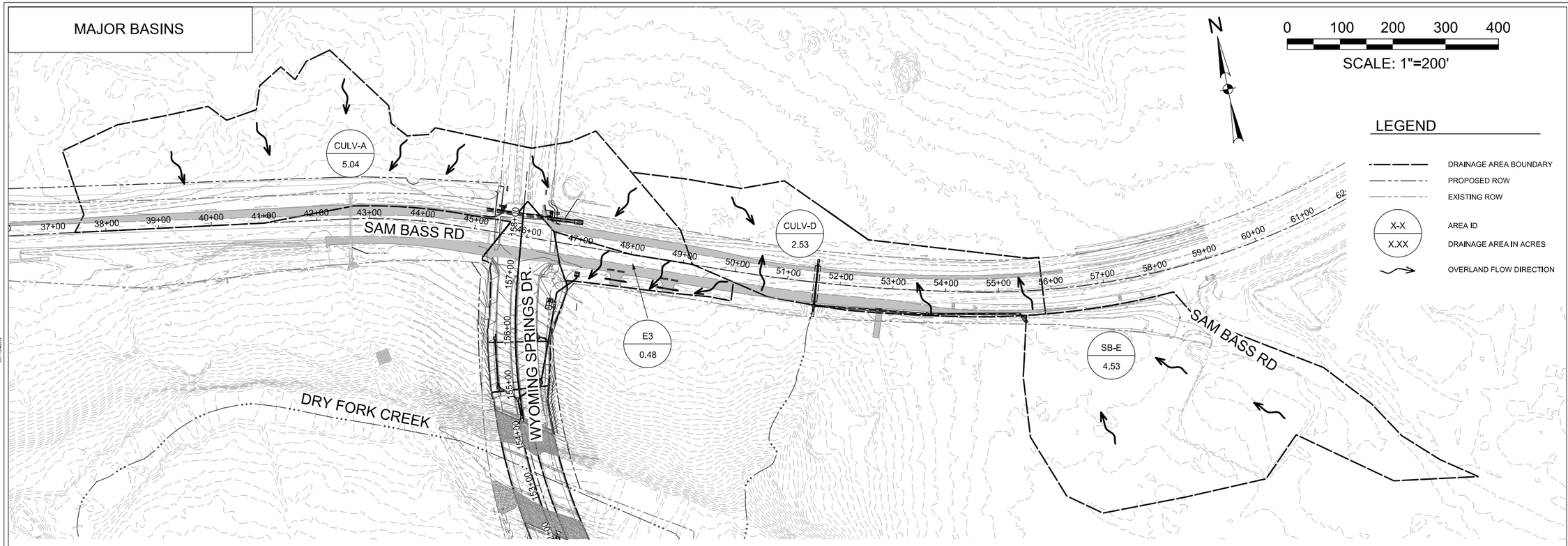

SUB-BASINS

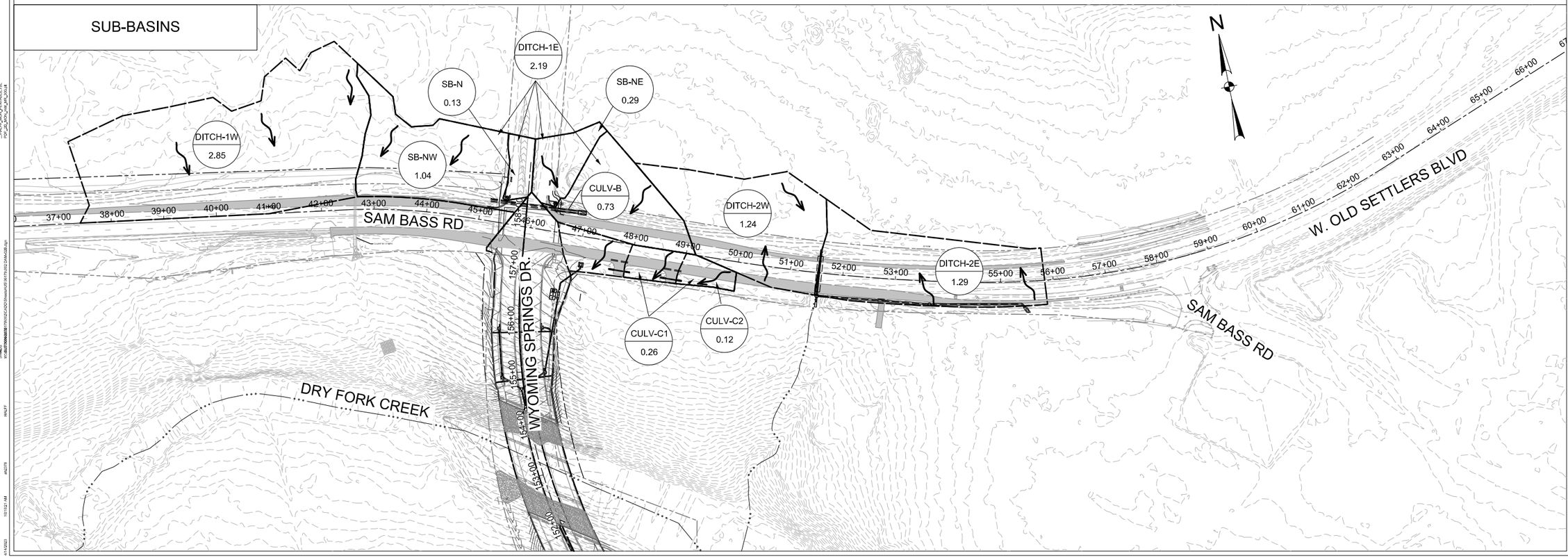

WYOMING SPRINGS
SEGMENT 1
ROUND ROCK, TX

ROUND ROCK TEXAS

halff
13620 BRANTWICK DR
BLDG C, STE 100
AUSTIN, TX 78729
(512) 777-4600
TBPELS FIRM #312

Revision No.	Date	Description

F312 4-14-23
STATE OF TEXAS
ANDREW M. L. DUTTON
117255
LICENSED
PROFESSIONAL ENGINEER

100% SUBMITTAL

Project No.:	36179.002
Issued:	4/14/2023
Drawn By:	SC
Checked By:	JN
Scale:	1"=200'

Sheet Title
OVERALL
DRAINAGE AREA MAP
(3 OF 3)

153
Sheet Number

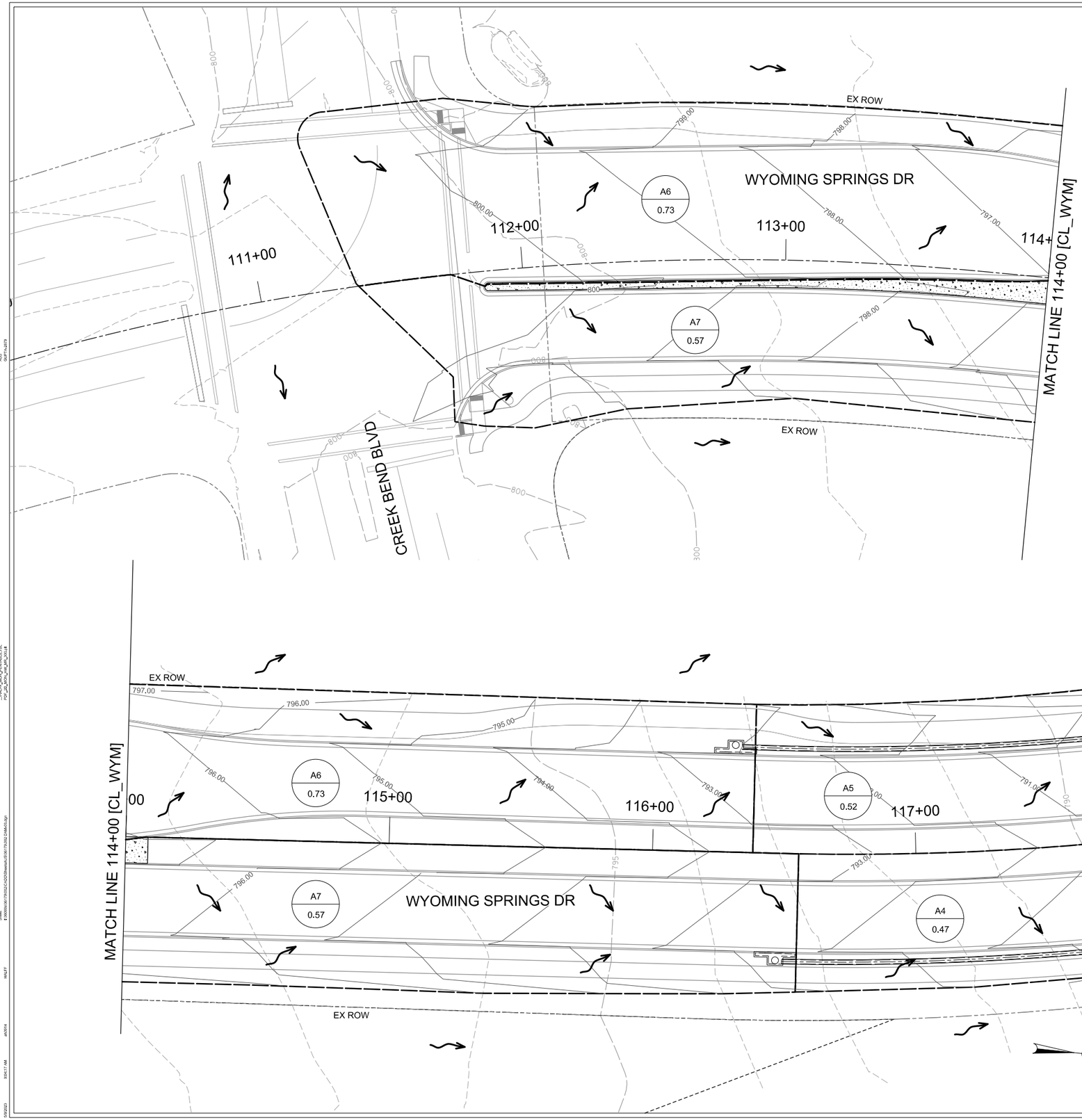

0 20 40 60 80

SCALE: 1"=40'

LEGEND

- DRAINAGE AREA BOUNDARY
- PROPOSED ROW
- EXISTING ROW
- X-X / X.XX — AREA ID / DRAINAGE AREA IN ACRES
- OVERLAND FLOW DIRECTION

NOTES:

1. STORM RUNOFF CALCULATIONS PER CITY OF ROUND ROCK DRAINAGE CRITERIA MANUAL.
2. PEAK FLOWS COMPUTED USING RATIONAL METHOD.
3. HYDRAULIC COMPUTATIONS PERFORMED WITH STORMCAD 10.03.01.08.
4. SEE OVERALL DRAINAGE AREA MAP FOR ADDITIONAL INFORMATION.
5. SEE DRAINAGE CALCULATION SHEETS FOR BASIN RUNOFF CALCULATIONS.

WYOMING SPRINGS
SEGMENT 1
ROUND ROCK, TX

ROUND ROCK TEXAS

halff
13620 BRANTWICK DR
BLDG C, STE 100
AUSTIN, TX 78729
(512) 777-4600
TBPELS FIRM #312

Revision No.	Date	Description

F-312 4/5/23

STATE OF TEXAS
JEFFREY L NAGY
133255
LICENSED
PROFESSIONAL ENGINEER

100% SUBMITTAL

Project No.:	36179.002
Issued:	5/9/2023
Drawn By:	SG
Checked By:	JN
Scale:	1"=40'

Sheet Title
DRAINAGE AREA MAP
(1 OF 9)

154
Sheet Number

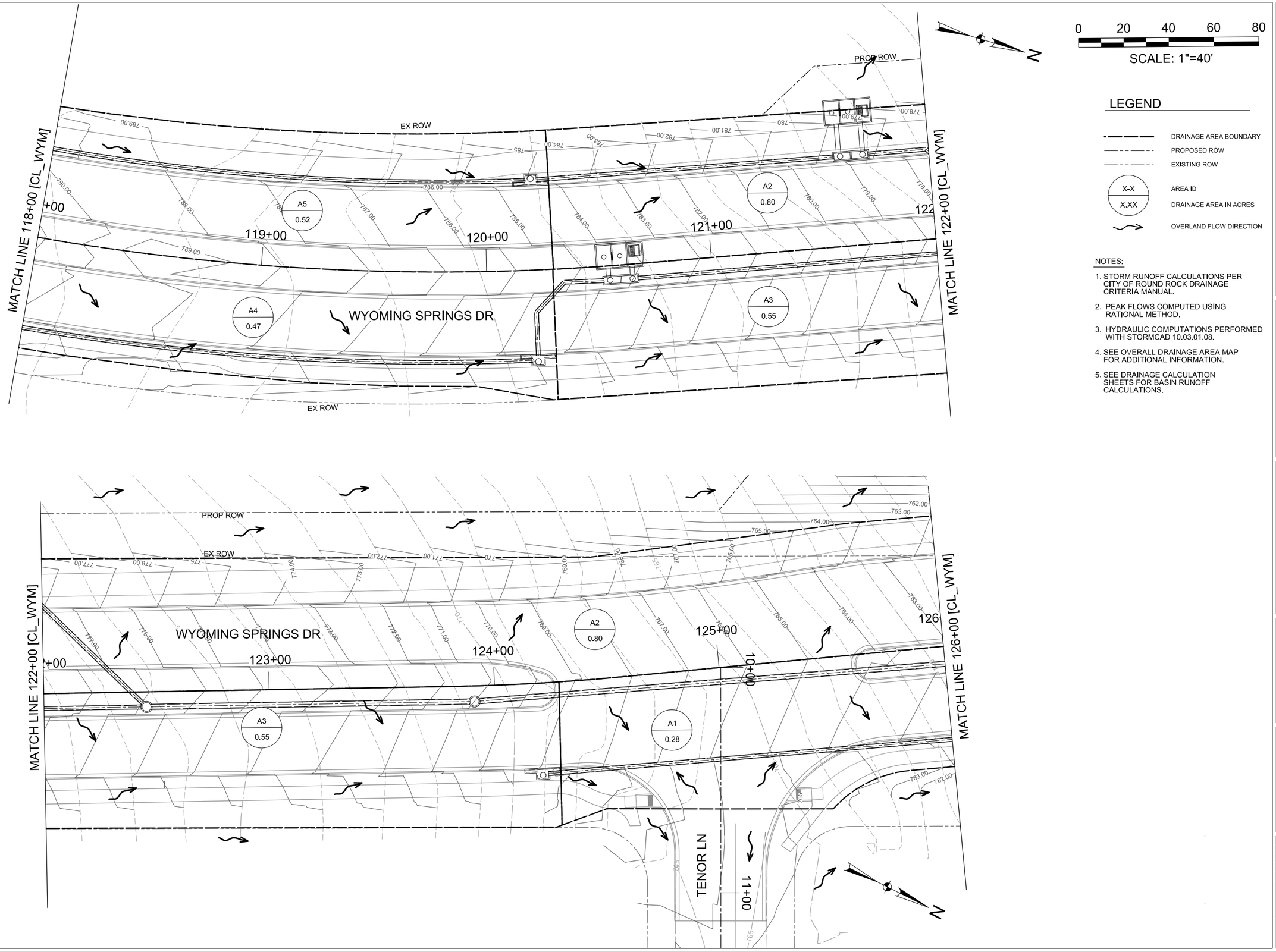

NOTES:

1. STORM RUNOFF CALCULATIONS PER CITY OF ROUND ROCK DRAINAGE CRITERIA MANUAL.
2. PEAK FLOWS COMPUTED USING RATIONAL METHOD.
3. HYDRAULIC COMPUTATIONS PERFORMED WITH STORMCAD 10.03.01.08.
4. SEE OVERALL DRAINAGE AREA MAP FOR ADDITIONAL INFORMATION.
5. SEE DRAINAGE CALCULATION SHEETS FOR BASIN RUNOFF CALCULATIONS.

WYOMING SPRINGS
SEGMENT 1
ROUND ROCK, TX

ROUND ROCK TEXAS

halff
13620 BRANTWICK DR
BLDG C, STE 100
AUSTIN, TX 78729
(512) 777-4800
TBPELS FIRM #312

Revision No.	Date	Description

F-3122 4/5/23
STATE OF TEXAS
JEFFREY L NAGY
133255
LICENSED
PROFESSIONAL ENGINEER

100% SUBMITTAL

Project No.:	36179.002
Issued:	5/9/2023
Drawn By:	SG
Checked By:	JN
Scale:	1"=40'

Sheet Title
DRAINAGE AREA MAP
(2 OF 9)

155
Sheet Number

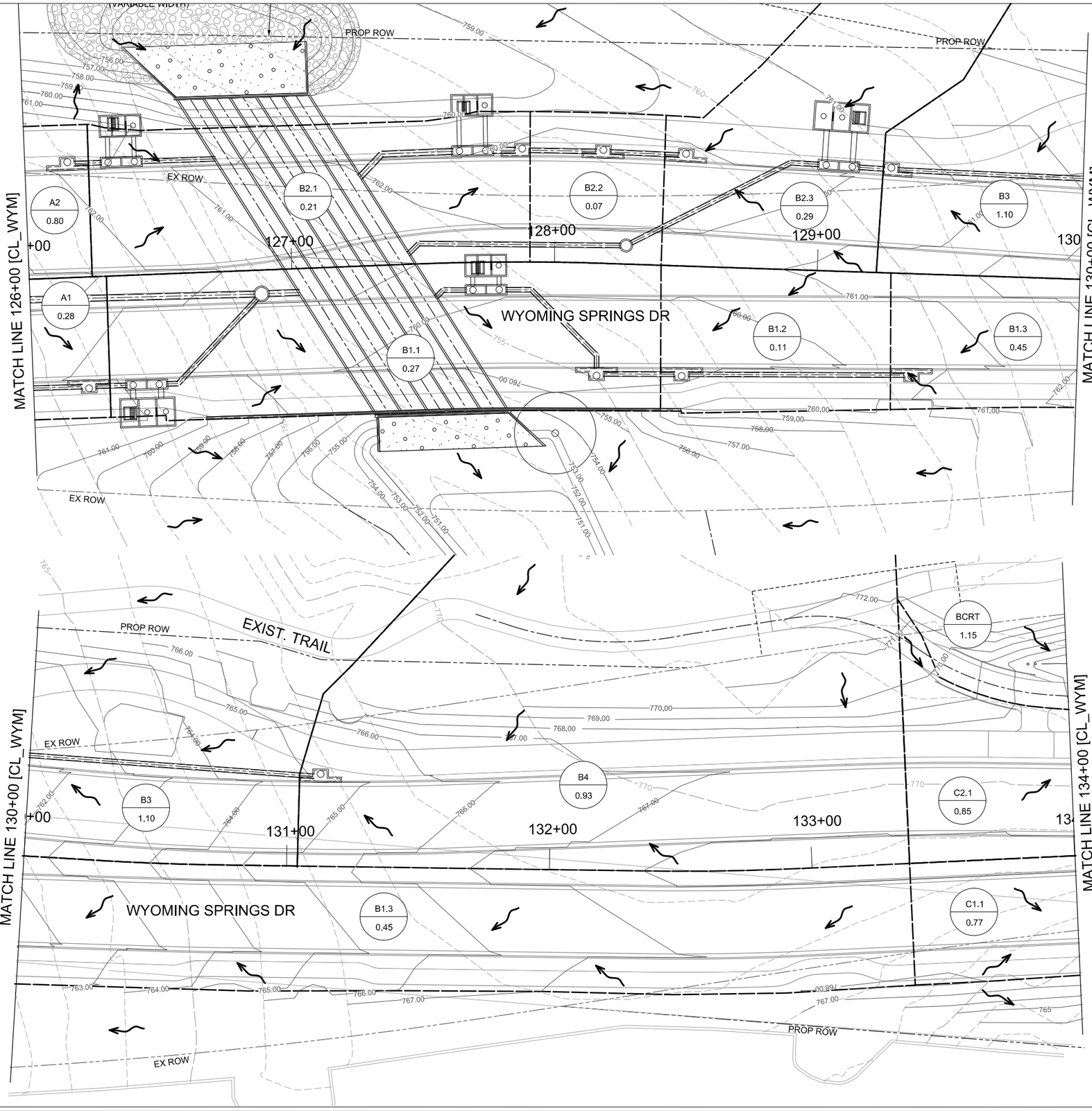

0 20 40 60 80

SCALE: 1"=40'

LEGEND

- DRAINAGE AREA BOUNDARY
- PROPOSED ROW
- EXISTING ROW
- X-X / X.XX — AREA ID / DRAINAGE AREA IN ACRES
- OVERLAND FLOW DIRECTION

NOTES:

1. STORM RUNOFF CALCULATIONS PER CITY OF ROUND ROCK DRAINAGE CRITERIA MANUAL.
2. PEAK FLOWS COMPUTED USING RATIONAL METHOD.
3. HYDRAULIC COMPUTATIONS PERFORMED WITH STORMCAD 10.03.01.08.
4. SEE OVERALL DRAINAGE AREA MAP FOR ADDITIONAL INFORMATION.
5. SEE DRAINAGE CALCULATION SHEETS FOR BASIN RUNOFF CALCULATIONS.

WYOMING SPRINGS
SEGMENT 1
ROUND ROCK, TX

ROUND ROCK TEXAS

halff
13620 BRANTWICK DR
BLDG C, STE 100
AUSTIN, TX 78729
(512) 777-4600
TBPELS FIRM #312

Revision No.	Date	Description

F-312 4/5/23
STATE OF TEXAS
JEFFREY L NAGY
133255
LICENSED
PROFESSIONAL ENGINEER

100% SUBMITTAL

Project No.:	36179.002
Issued:	5/9/2023
Drawn By:	SG
Checked By:	JN
Scale:	1"=40'

Sheet Title
DRAINAGE AREA MAP
(3 OF 9)

156
Sheet Number

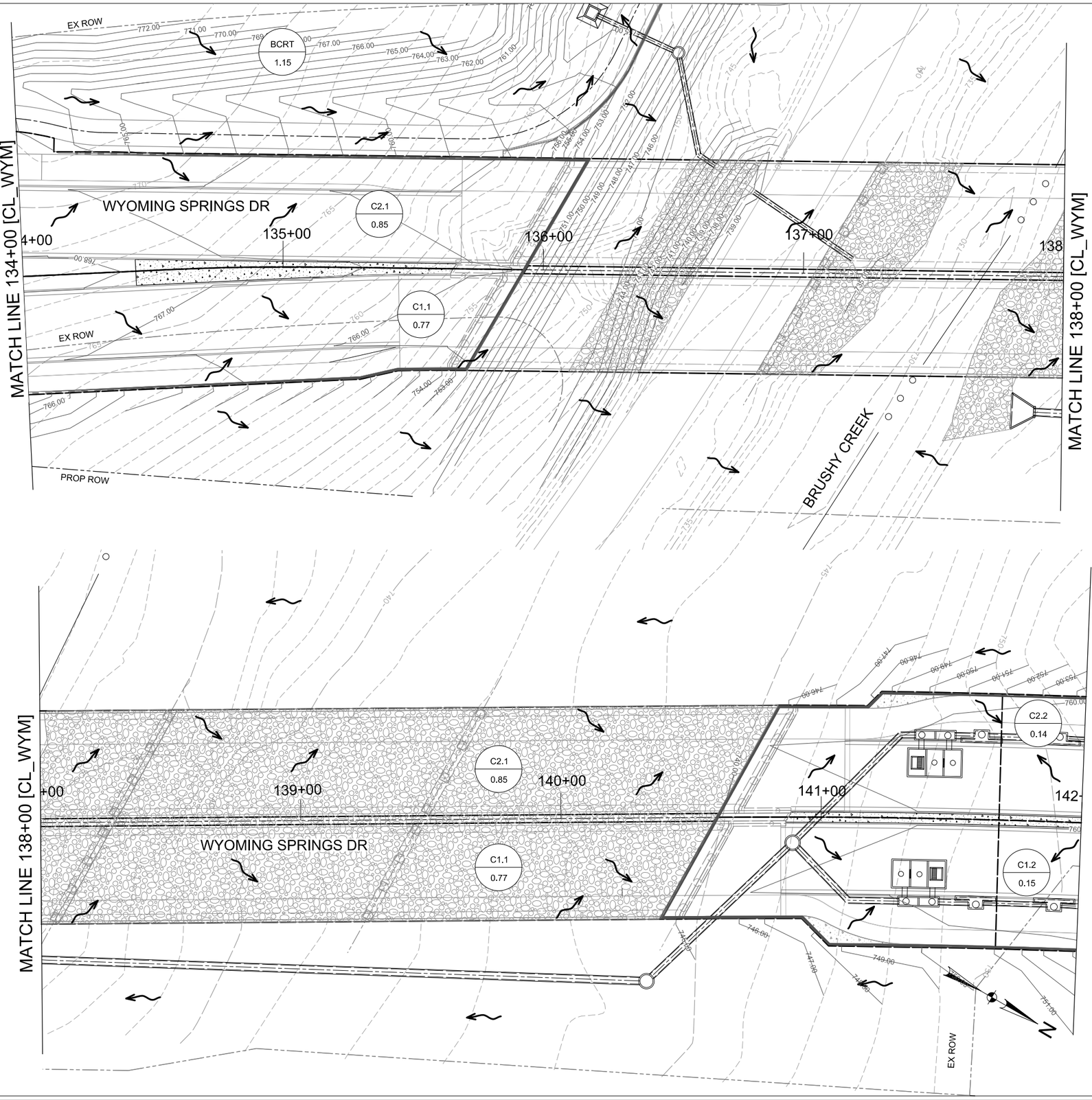

0 20 40 60 80

SCALE: 1"=40'

LEGEND

- DRAINAGE AREA BOUNDARY
- PROPOSED ROW
- EXISTING ROW
- X-X / X.XX — AREA ID / DRAINAGE AREA IN ACRES
- OVERLAND FLOW DIRECTION

NOTES:

1. STORM RUNOFF CALCULATIONS PER CITY OF ROUND ROCK DRAINAGE CRITERIA MANUAL.
2. PEAK FLOWS COMPUTED USING RATIONAL METHOD.
3. HYDRAULIC COMPUTATIONS PERFORMED WITH STORMCAD 10.03.01.08.
4. SEE OVERALL DRAINAGE AREA MAP FOR ADDITIONAL INFORMATION.
5. SEE DRAINAGE CALCULATION SHEETS FOR BASIN RUNOFF CALCULATIONS.

WYOMING SPRINGS
SEGMENT 1
ROUND ROCK, TX

ROUND ROCK TEXAS

halff
13620 BRANTWICK DR
BLDG C, STE 100
AUSTIN, TX 78729
(512) 777-4600
TBPELS FIRM #312

Revision No.	Date	Description

F-312 4/5/23

STATE OF TEXAS
JEFFREY L NAGY
133255
LICENSED
PROFESSIONAL ENGINEER

100% SUBMITTAL

Project No.:	36179.002
Issued:	5/9/2023
Drawn By:	SG
Checked By:	JN
Scale:	~~1"=40'~~

Sheet Title
DRAINAGE AREA MAP
(4 OF 9)

157
Sheet Number

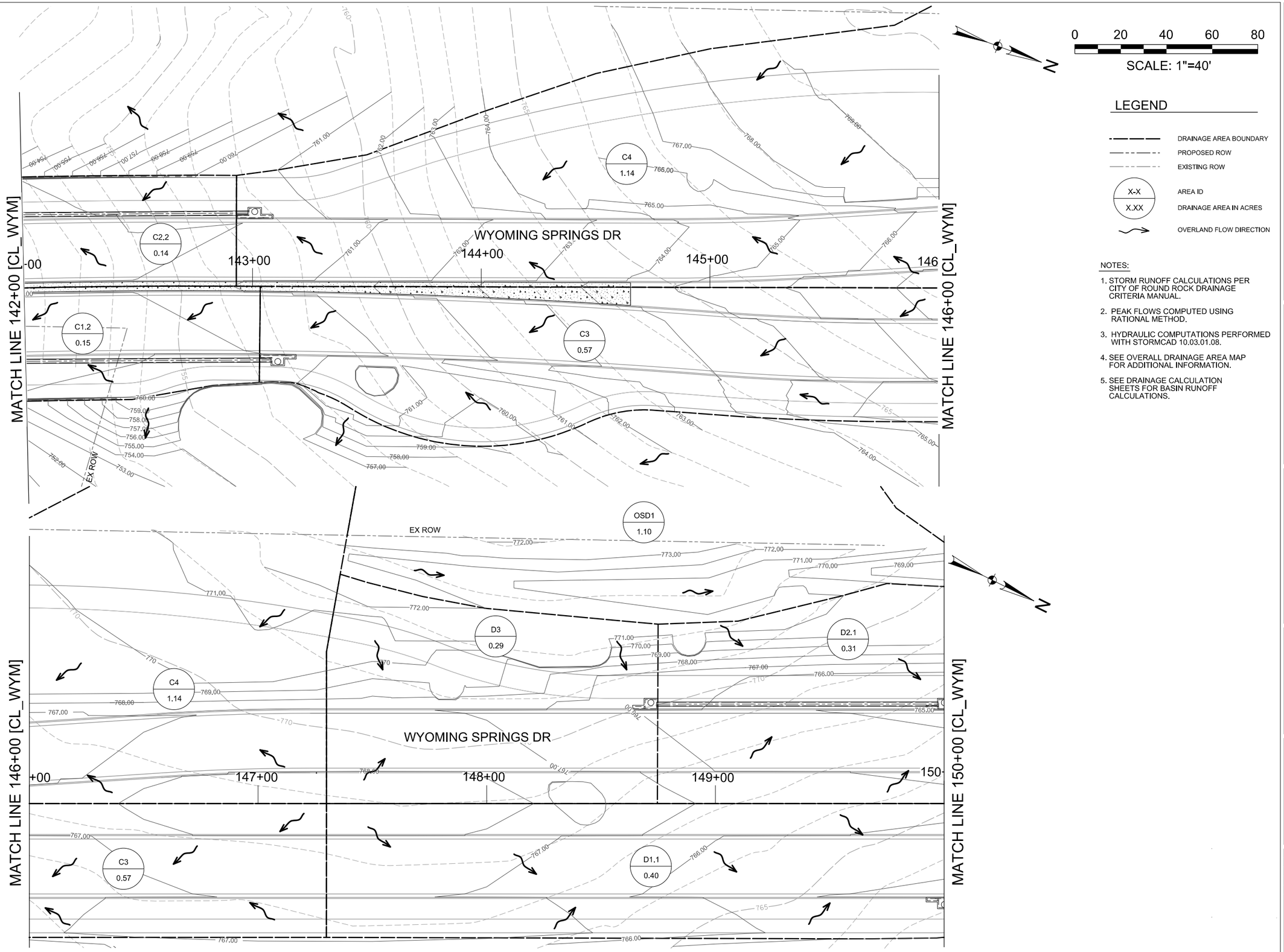

LEGEND

- DRAINAGE AREA BOUNDARY
- PROPOSED ROW
- EXISTING ROW
- X-X / X.XX — AREA ID / DRAINAGE AREA IN ACRES
- OVERLAND FLOW DIRECTION

NOTES:

1. STORM RUNOFF CALCULATIONS PER CITY OF ROUND ROCK DRAINAGE CRITERIA MANUAL.
2. PEAK FLOWS COMPUTED USING RATIONAL METHOD.
3. HYDRAULIC COMPUTATIONS PERFORMED WITH STORMCAD 10.03.01.08.
4. SEE OVERALL DRAINAGE AREA MAP FOR ADDITIONAL INFORMATION.
5. SEE DRAINAGE CALCULATION SHEETS FOR BASIN RUNOFF CALCULATIONS.

WYOMING SPRINGS
SEGMENT 1
ROUND ROCK, TX

ROUND ROCK TEXAS

halff
13620 BRANTWICK DR
BLDG C, STE 100
AUSTIN, TX 78729
(512) 777-4600
TBPELS FIRM #312

Revision		
No.	Date	Description

F-312 4/5/23
STATE OF TEXAS
JEFFREY L. NAGY
133255
LICENSED
PROFESSIONAL ENGINEER

100% SUBMITTAL

Project No.:	36179.002
Issued:	5/9/2023
Drawn By:	SG
Checked By:	JN
Scale:	1"=40'

Sheet Title
DRAINAGE AREA MAP
(5 OF 9)

158
Sheet Number

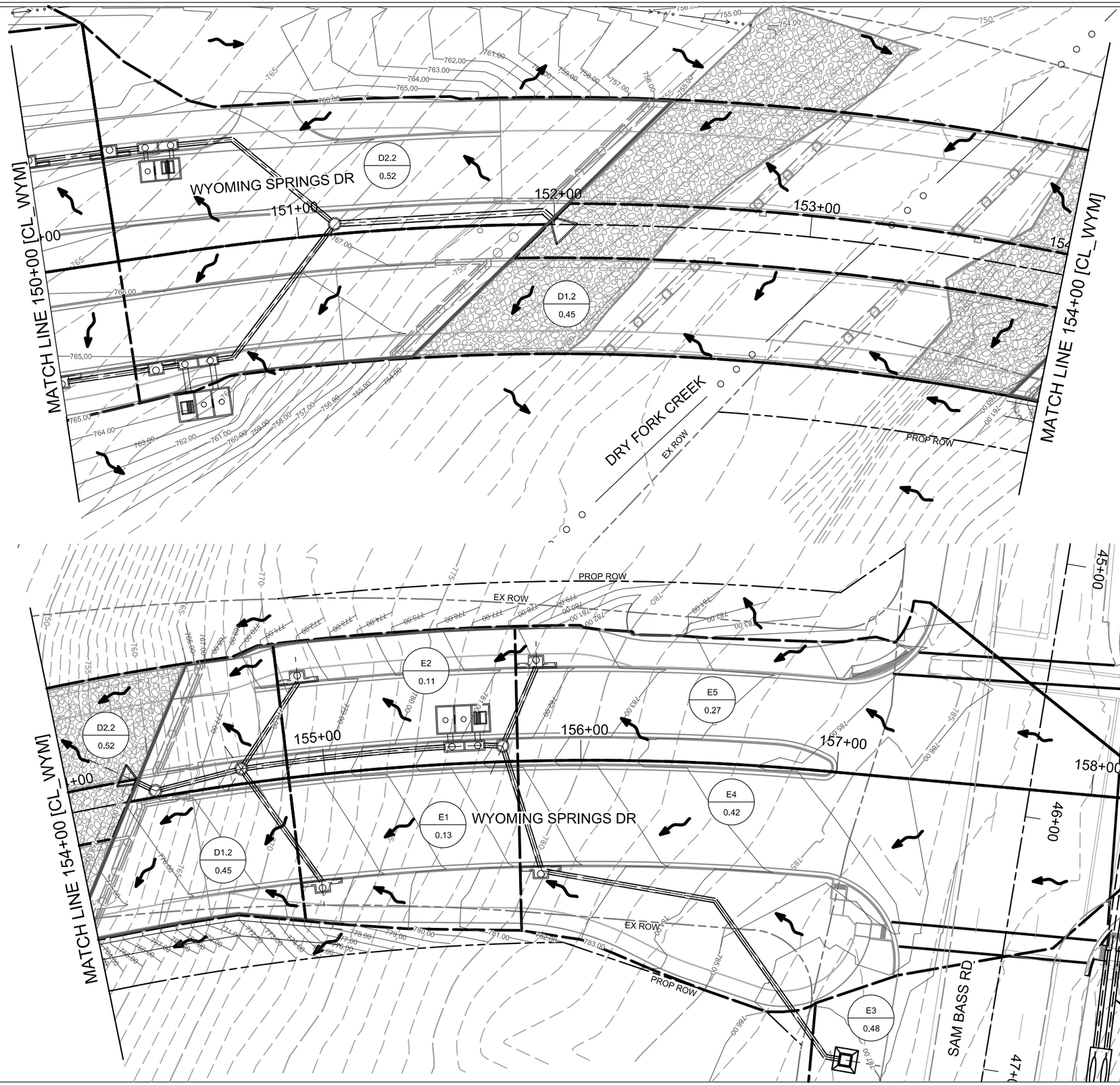

N

0 20 40 60 80

SCALE: 1"=40'

LEGEND

- DRAINAGE AREA BOUNDARY
- PROPOSED ROW
- EXISTING ROW
- X-X / X.XX — AREA ID / DRAINAGE AREA IN ACRES
- OVERLAND FLOW DIRECTION

NOTES:

1. STORM RUNOFF CALCULATIONS PER CITY OF ROUND ROCK DRAINAGE CRITERIA MANUAL.
2. PEAK FLOWS COMPUTED USING RATIONAL METHOD.
3. HYDRAULIC COMPUTATIONS PERFORMED WITH STORMCAD 10.03.01.08.
4. SEE OVERALL DRAINAGE AREA MAP FOR ADDITIONAL INFORMATION.
5. SEE DRAINAGE CALCULATION SHEETS FOR BASIN RUNOFF CALCULATIONS.

WYOMING SPRINGS
SEGMENT 1
ROUND ROCK, TX

ROUND ROCK TEXAS

halff
13620 BRANTWICK DR
BLDG C, STE 100
AUSTIN, TX 78729
(512) 777-4600
TBPELS FIRM #312

Revision No.	Date	Description

F-312 8/14/23
STATE OF TEXAS
JEFFREY L. NAGY
133255
LICENSED PROFESSIONAL ENGINEER

100% SUBMITTAL

Project No.:	36179.002
Issued:	8/24/2023
Drawn By:	SG
Checked By:	JN
Scale:	1"=40'

Sheet Title
DRAINAGE AREA MAP
(6 OF 9)

159
Sheet Number

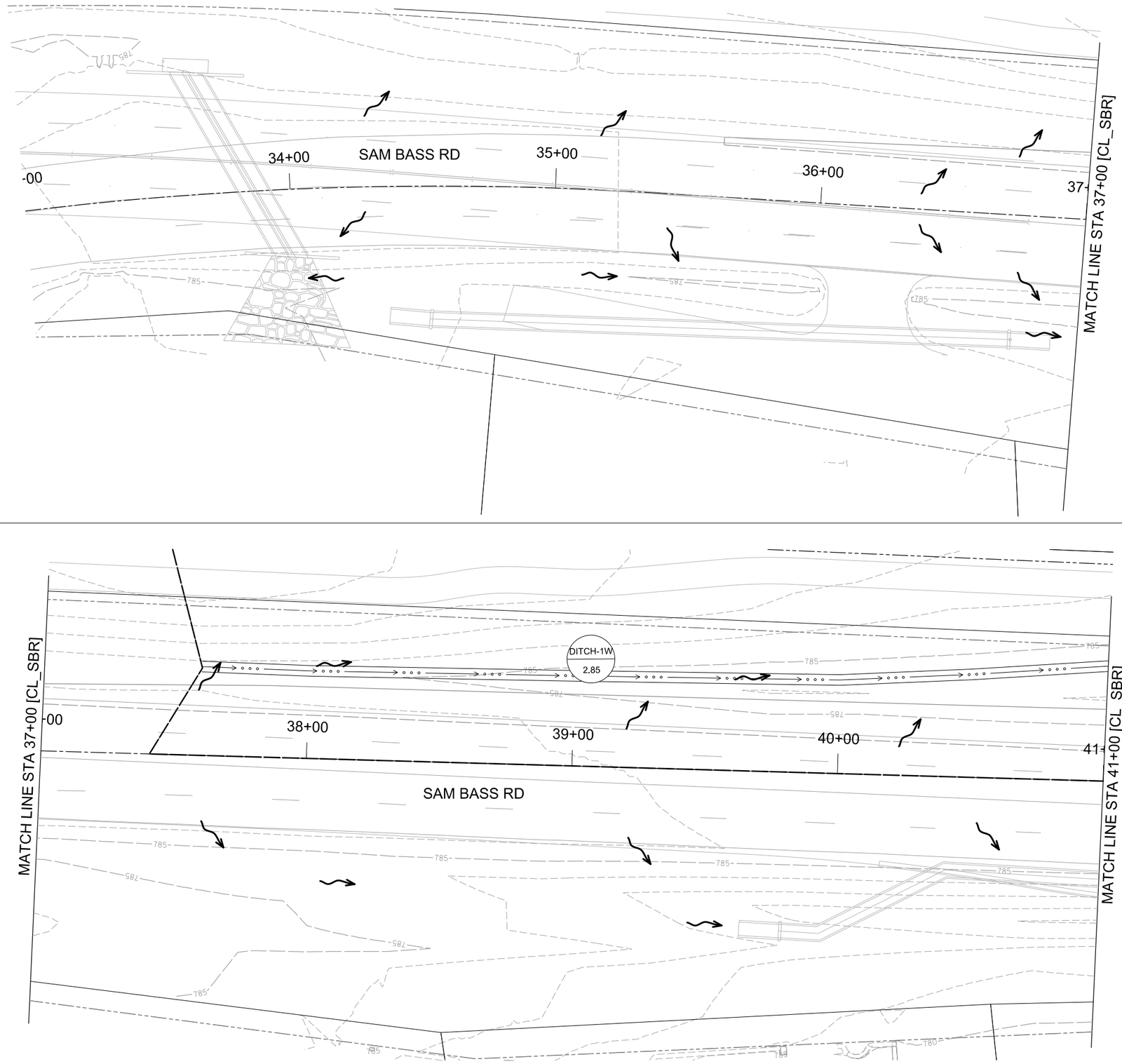

N

0 20 40 60 80

SCALE: 1"=40'

LEGEND

- DRAINAGE AREA BOUNDARY
- PROPOSED ROW
- EXISTING ROW
- X-X / X.XX — AREA ID / DRAINAGE AREA IN ACRES
- OVERLAND FLOW DIRECTION

NOTES:

1. STORM RUNOFF CALCULATIONS PER CITY OF ROUND ROCK DRAINAGE CRITERIA MANUAL.
2. PEAK FLOWS COMPUTED USING RATIONAL METHOD.
3. HYDRAULIC COMPUTATIONS PERFORMED WITH STORMCAD 10.03.01.08.
4. SEE OVERALL DRAINAGE AREA MAP FOR ADDITIONAL INFORMATION.
5. SEE DRAINAGE CALCULATION SHEETS FOR BASIN RUNOFF CALCULATIONS.

WYOMING SPRINGS
SEGMENT 1
ROUND ROCK, TX

ROUND ROCK TEXAS

halff
13620 BRANTWICK DR
BLDG C, STE 100
AUSTIN, TX 78729
(512) 777-4600
TBPELS FIRM #312

Revision No.	Date	Description

F-312 4-14-23
STATE OF TEXAS
ANDREW M. L. DUTTON
117255
LICENSED
PROFESSIONAL ENGINEER

100% SUBMITTAL

Project No.:	36179.002
Issued:	4/14/2023
Drawn By:	SC
Checked By:	JN
Scale:	1"=40'

Sheet Title
DRAINAGE AREA MAP
(7 OF 9)

160
Sheet Number

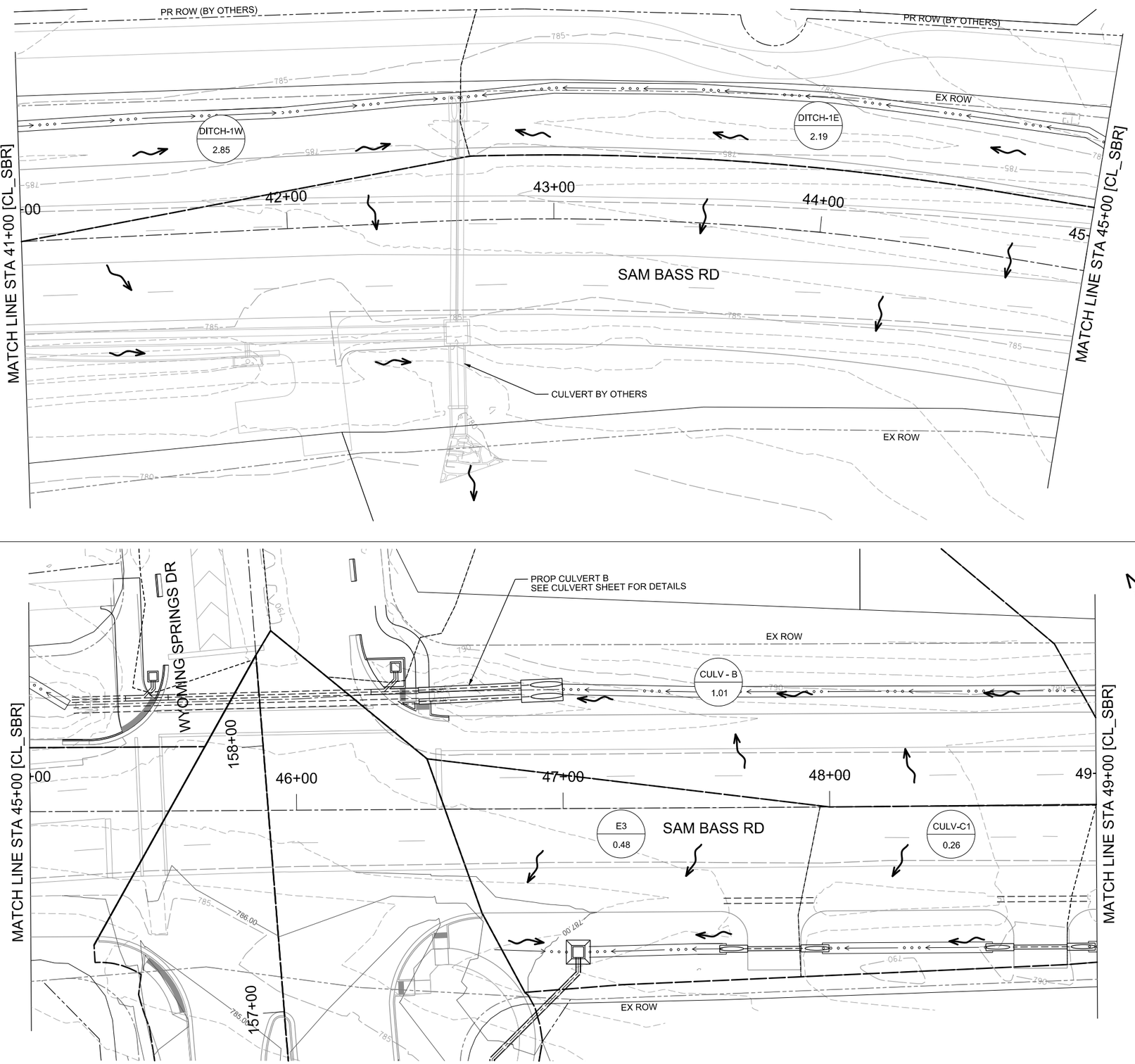



0 20 40 60 80

SCALE: 1"=40'

LEGEND

- DRAINAGE AREA BOUNDARY
- PROPOSED ROW
- EXISTING ROW
- X-X / X.XX — AREA ID / DRAINAGE AREA IN ACRES
- OVERLAND FLOW DIRECTION

NOTES:

1. STORM RUNOFF CALCULATIONS PER CITY OF ROUND ROCK DRAINAGE CRITERIA MANUAL.
2. PEAK FLOWS COMPUTED USING RATIONAL METHOD.
3. HYDRAULIC COMPUTATIONS PERFORMED WITH STORMCAD 10.03.01.08.
4. SEE OVERALL DRAINAGE AREA MAP FOR ADDITIONAL INFORMATION.
5. SEE DRAINAGE CALCULATION SHEETS FOR BASIN RUNOFF CALCULATIONS.

WYOMING SPRINGS
SEGMENT 1
ROUND ROCK, TX

ROUND ROCK TEXAS

halff
13620 BRANTWICK DR
BLDG C, STE 100
AUSTIN, TX 78729
(512) 777-4600
TBPELS FIRM #312

Revision No.	Date	Description

F312 4-14-23
STATE OF TEXAS
ANDREW M. L. DUTTON
117255
LICENSED
PROFESSIONAL ENGINEER

100% SUBMITTAL

Project No.:	36179.002
Issued:	4/14/2023
Drawn By:	SC
Checked By:	JN
Scale:	1"=40'

Sheet Title
DRAINAGE AREA MAP
(8 OF 9)

161
Sheet Number

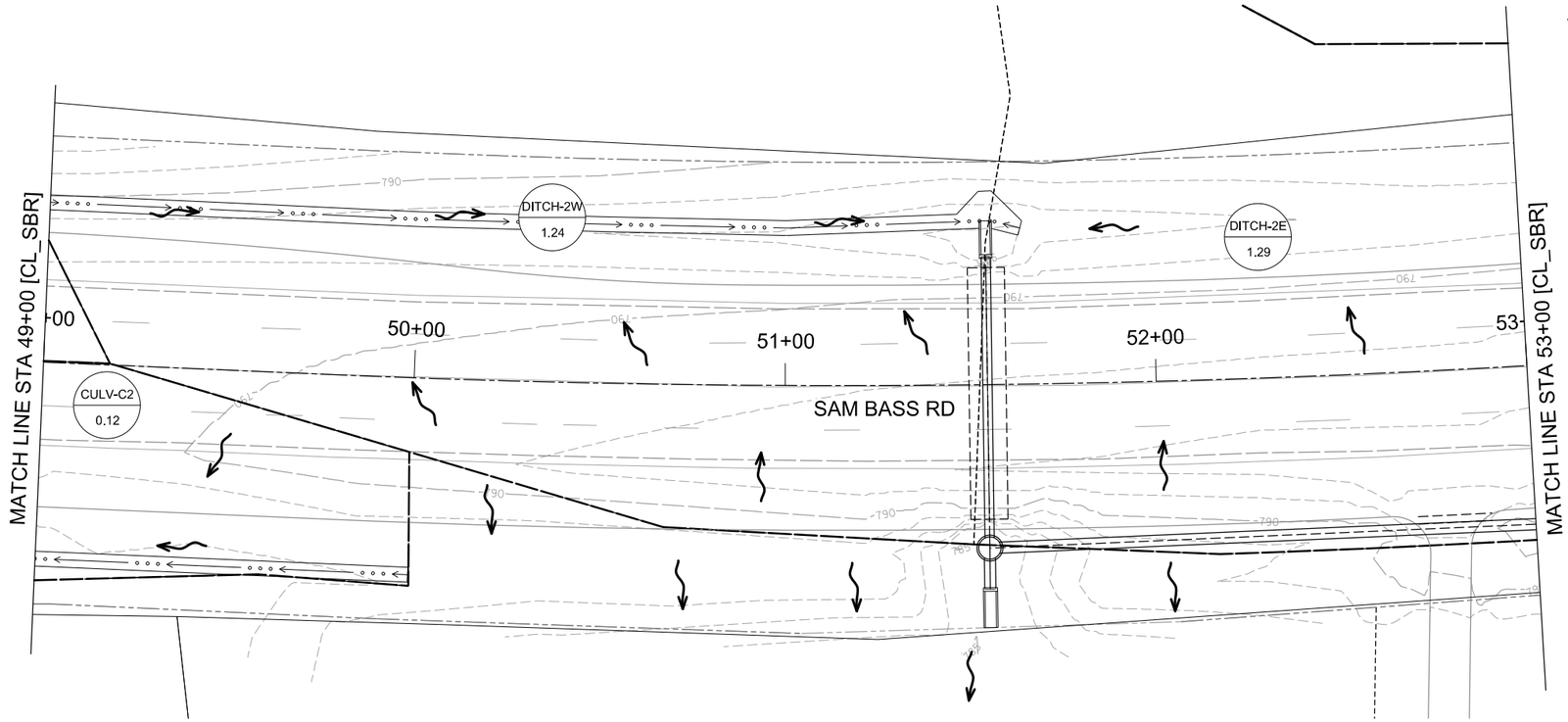

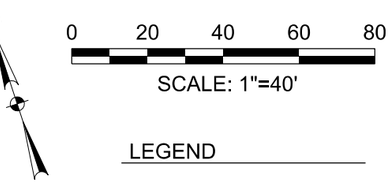

LEGEND

- DRAINAGE AREA BOUNDARY
- PROPOSED ROW
- EXISTING ROW
- X-X / X.XX — AREA ID / DRAINAGE AREA IN ACRES
- OVERLAND FLOW DIRECTION

NOTES:

1. STORM RUNOFF CALCULATIONS PER CITY OF ROUND ROCK DRAINAGE CRITERIA MANUAL.
2. PEAK FLOWS COMPUTED USING RATIONAL METHOD.
3. HYDRAULIC COMPUTATIONS PERFORMED WITH STORMCAD 10.03.01.08.
4. SEE OVERALL DRAINAGE AREA MAP FOR ADDITIONAL INFORMATION.
5. SEE DRAINAGE CALCULATION SHEETS FOR BASIN RUNOFF CALCULATIONS.

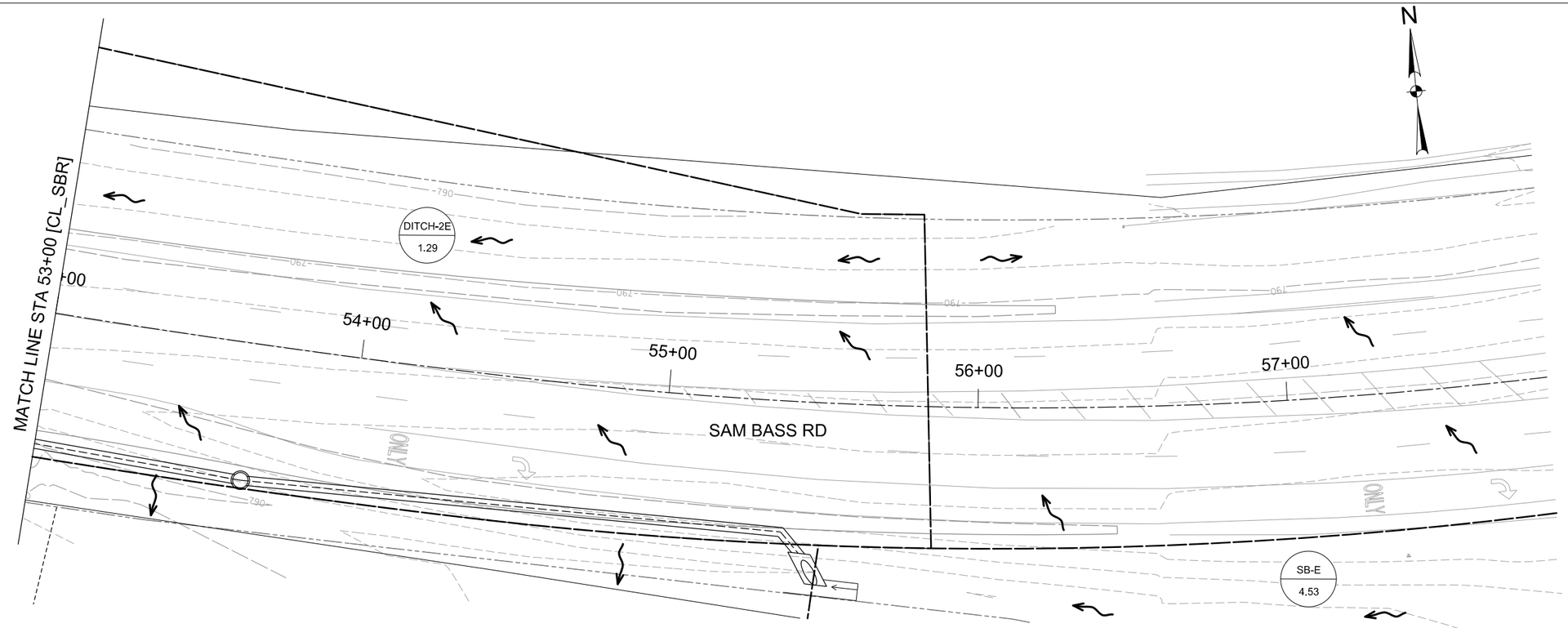

WYOMING SPRINGS
SEGMENT 1
ROUND ROCK, TX

ROUND ROCK TEXAS

halff
13620 BRANTWICK DR
BLDG C, STE 100
AUSTIN, TX 78729
(512) 777-4600
TBPELS FIRM #312

Revision No.	Date	Description

F312 4-14-23
STATE OF TEXAS
ANDREW M. L. DUTTON
117255
LICENSED
PROFESSIONAL ENGINEER

100% SUBMITTAL

Project No.:	36179.002
Issued:	4/14/2023
Drawn By:	SC
Checked By:	JN
Scale:	1"=40'

Sheet Title
DRAINAGE AREA MAP
(9 OF 9)

162
Sheet Number

Beginning chain CLVRT_WYM description

Point CLVRTWYM01 N 10,165,024.1776 E 3,119,590.9728 Sta 1+00.00

Course from CLVRTWYM01 to CLVRTWYM02 S 34° 33' 19.4243" W Dist 50.0000

Point CLVRTWYM02 N 10,164,982.9987 E 3,119,562.6127 Sta 1+50.00

Course from CLVRTWYM02 to CLVRTWYM03 S 34° 12' 28.7590" W Dist 298.6989

Point CLVRTWYM03 N 10,164,735.9741 E 3,119,394.6846 Sta 4+48.70

Ending chain CLVRT_WYM description

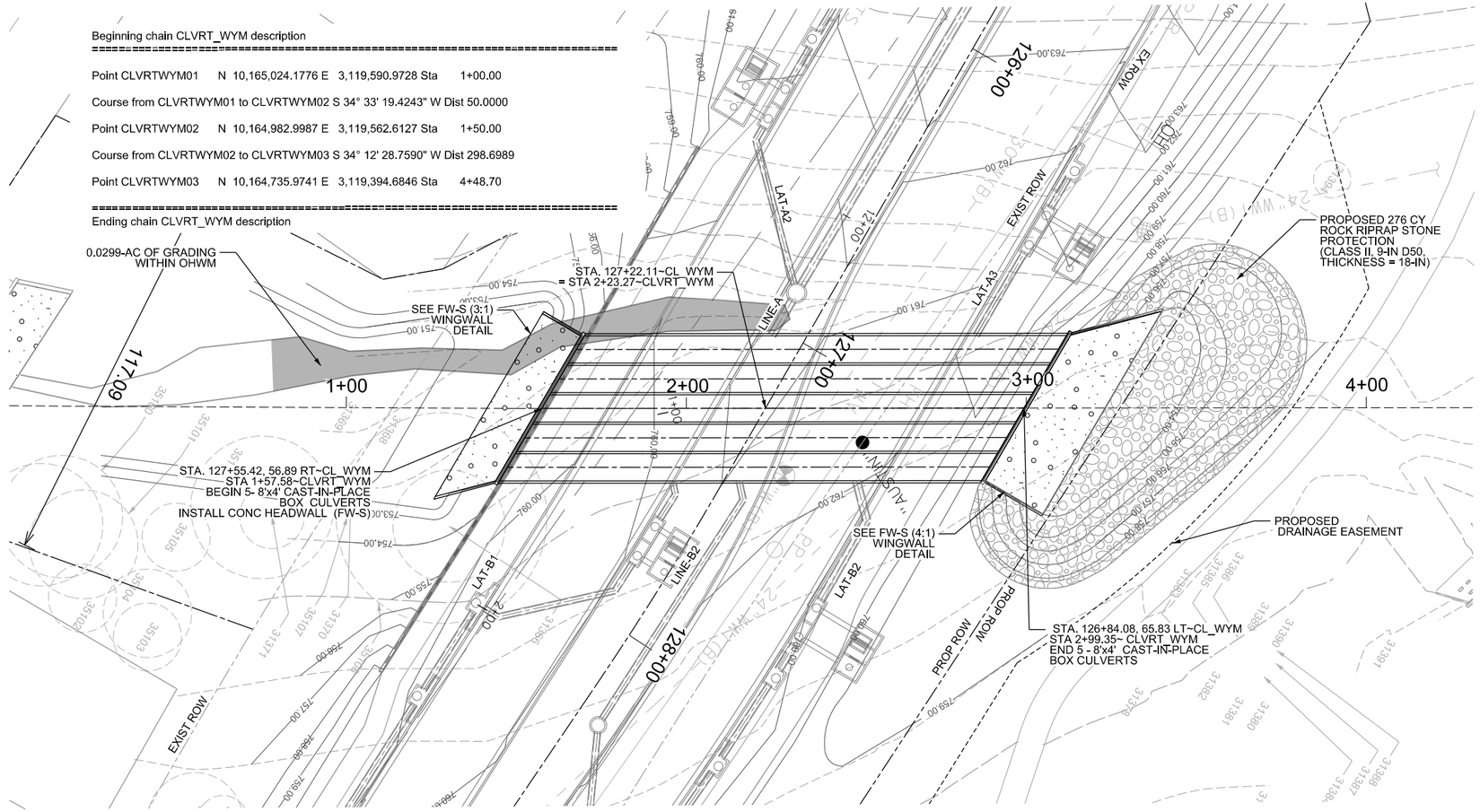

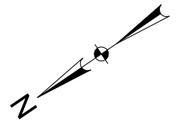

0 20 40 60 80

SCALE: 1"=40'

LEGEND

- ROADWAY CENTERLINE
- EXIST. CONTOURS
- PROP. DRAINAGE EASEMENT
- ROW
- PROPOSED CONTOURS
- PROPOSED DITCH CENTERLINE
- PROPOSED STORM SEWER/ CULVERT
- PROPOSED STORM HEADWALL
- PROPOSED CURB INLET
- STORM TROOPER
- PROPOSED AREA ZONE DRAIN
- PROPOSED MANHOLE

NOTES:

1. CONTRACTOR MUST FIELD VERIFY ALL EXISTING UTILITIES VERTICALLY AND HORIZONTALLY PRIOR TO CONSTRUCTION. IF CONFLICTS ARE ENCOUNTERED, OR ARE DIFFERENT THAN WHAT IS SHOWN, CONTRACTOR MUST NOTIFY THE ENGINEER IMMEDIATELY.
2. CONTRACTOR SHALL BE SOLELY RESPONSIBLE FOR ANY TEMPORARY DRAINAGE DURING CONSTRUCTION. ANY TEMPORARY DRAINAGE OPERATIONS WILL BE REMOVED BY THE CONTRACTOR AS REQUIRED BY THE ENGINEER AT THE CONTRACTOR'S ENTIRE EXPENSE.
3. OVERALL TRENCH SAFETY WILL REMAIN THE RESPONSIBILTY OF THE CONTRACTOR AND SHALL BE IN ACCORDANCE WITH THE LAWS OF THE STATE OF TEXAS AND THE U.S. OCCUPATIONAL SAFETY AND HEALTH ADMINISTRATION REGULATIONS.
4. ALL STORM SEWER BENDS AND WYES SHALL BE PRECAST UNLESS OTHERWISE NOTED.
5. CULVERT CALCULATIONS PERFORMED USING HY-8 VERSION 7.50.
6. SEE REMOVAL PLAN FOR MORE INFORMATION.
7. TAILWATER CONDITION FOR CULVERT D TAKEN FROM HGL AT MANHOLE. SEE DRAINAGE CALCULATIONS FOR MORE INFORMATION.

CULVERT A

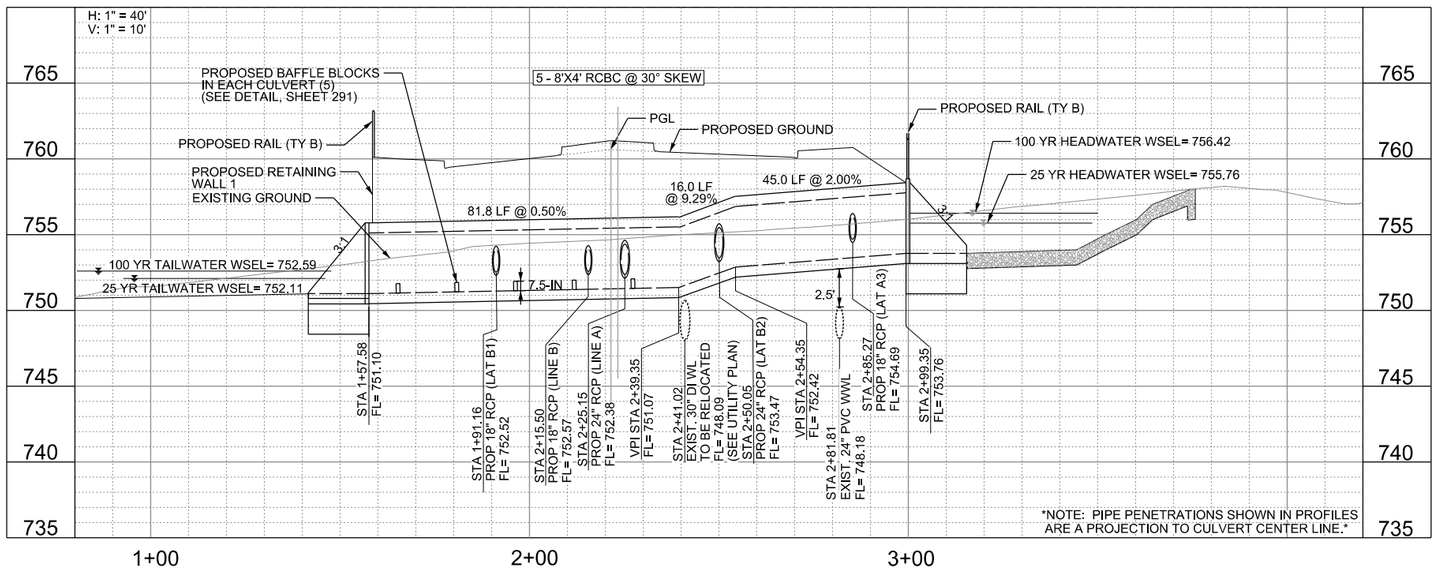

CULVERT FLOW DATA	
Q_{25}	850 cfs
Q_{100}	1240 cfs
US V_{25}	4.42 fps
DS V_{25}	6.04 fps
US V_{100}	4.77 fps
DS V_{100}	6.91 fps

WYOMING SPRINGS
SEGMENT 1
ROUND ROCK, TX

ROUND ROCK TEXAS

halff
13620 BRANTWICK DR
BLDG C, STE 100
AUSTIN, TX 78729
(512) 777-4600
TBPELS FIRM #312

Revision No.	Date	Description

F-312 4/5/23
STATE OF TEXAS
JEFFREY L. NAGY
133255
LICENSED PROFESSIONAL ENGINEER

100% SUBMITTAL

Project No.:	36179.002
Issued:	4/28/2023
Drawn By:	SG
Checked By:	JN
Scale:	1"=40'

Sheet Title
CULVERT A
PLAN AND PROFILE

163
Sheet Number

Culvert	Return Period	Total Contributing Area (Acres)	Q (CFS)	Proposed Culverts								
				Size	Material	Slope (%)	Inlet/Outlet Control	Headwater Elevation (Allowable)	Capacity - Overtop (CFS)	Headwater	Outlet Velocity (FPS)	Outlet Depth (FT)
CULVERT B	**25 YR**	0.73	3.40	2 - 24" CIRCULAR	RCP	4.55	Inlet	788.80	16.53	787.91	2.10	0.61
	100 YR		5.01							788.06	2.54	0.70

Culvert calculations performed utilizing HY-8 version 7.5

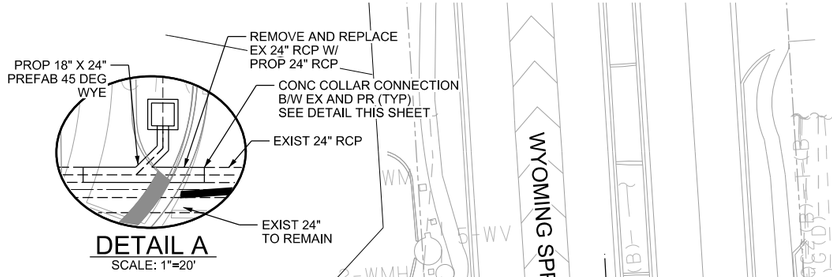

DETAIL A
SCALE: 1"=20'

BEHRENS RANCH MASTER ASSOC
WCAD: R327629

Beginning chain CL_CULV_B description

Point CULVB01 N 10,167,847.9889 E 3,118,546.4606 Sta 1+00.00

Course from CULVB01 to CULVB02 S 70° 33' 16.9375" E Dist 151.7023

Point CULVB02 N 10,167,797.4862 E 3,118,689.5098 Sta 2+51.70

Course from CULVB02 to CULVB03 S 71° 30' 05.5090" E Dist 74.0683

Point CULVB03 N 10,167,773.9859 E 3,118,759.7511 Sta 3+25.77

Ending chain CL_CULV_B description

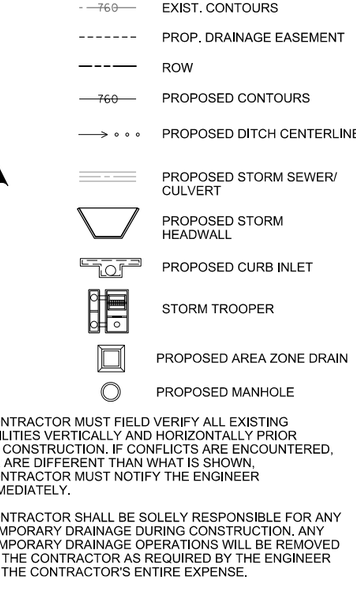

NOTES:

1. CONTRACTOR MUST FIELD VERIFY ALL EXISTING UTILITIES VERTICALLY AND HORIZONTALLY PRIOR TO CONSTRUCTION. IF CONFLICTS ARE ENCOUNTERED, OR ARE DIFFERENT THAN WHAT IS SHOWN, CONTRACTOR MUST NOTIFY THE ENGINEER IMMEDIATELY.
2. CONTRACTOR SHALL BE SOLELY RESPONSIBLE FOR ANY TEMPORARY DRAINAGE DURING CONSTRUCTION. ANY TEMPORARY DRAINAGE OPERATIONS WILL BE REMOVED BY THE CONTRACTOR AS REQUIRED BY THE ENGINEER AT THE CONTRACTOR'S ENTIRE EXPENSE.
3. OVERALL TRENCH SAFETY WILL REMAIN THE RESPONSIBILTY OF THE CONTRACTOR AND SHALL BE IN ACCORDANCE WITH THE LAWS OF THE STATE OF TEXAS AND THE U.S. OCCUPATIONAL SAFETY AND HEALTH ADMINISTRATION REGULATIONS.
4. ALL STORM SEWER BENDS AND WYES SHALL BE PRECAST UNLESS OTHERWISE NOTED.
5. CULVERT CALCULATIONS PERFORMED USING HY-8 VERSION 7.50.
6. SEE REMOVAL PLAN FOR MORE INFORMATION.
7. TAILWATER CONDITION FOR CULVERT D TAKEN FROM HGL AT MANHOLE. SEE DRAINAGE CALCULATIONS FOR MORE INFORMATION.

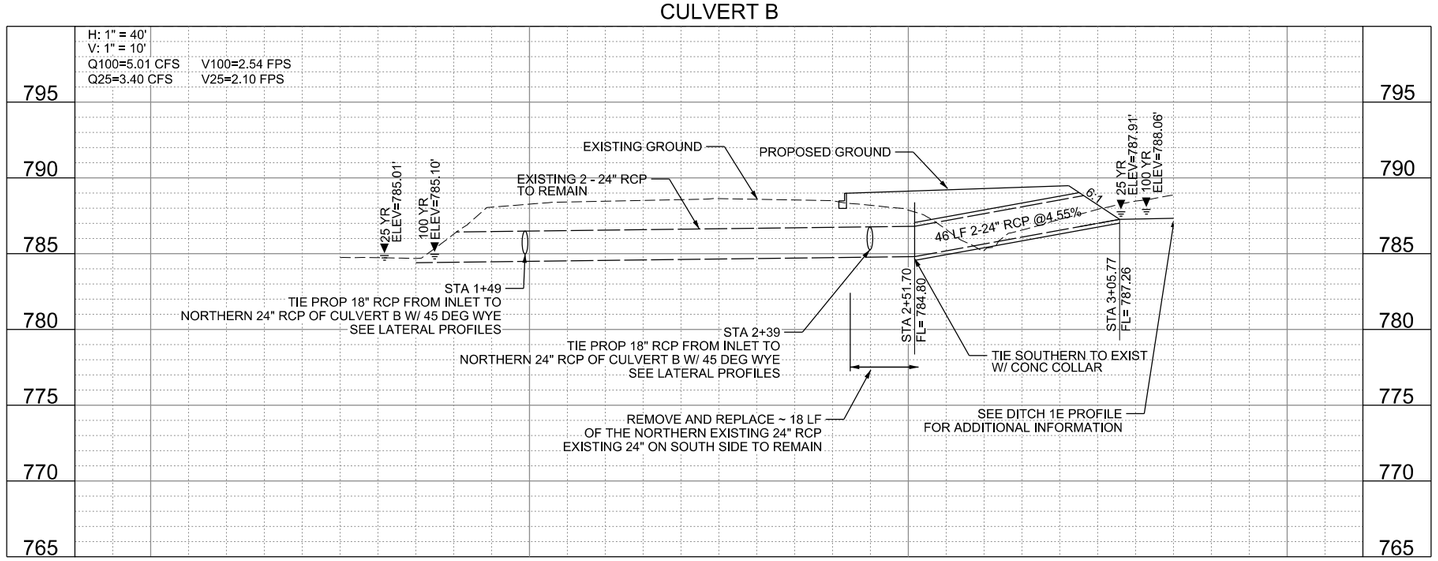

CULVERT B

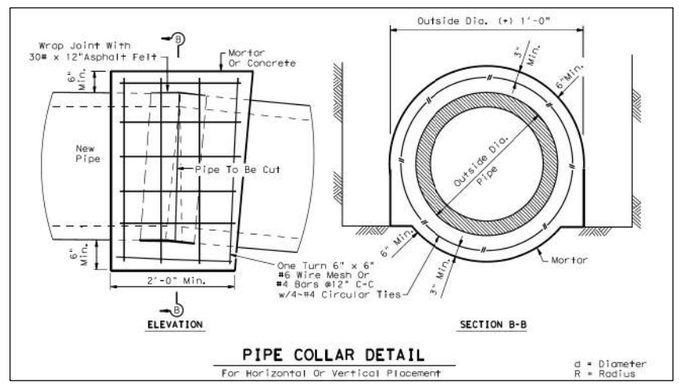

PIPE COLLAR DETAIL
For Horizontal Or Vertical Placement

d = Diameter
R = Radius

CONSIDER COLLAR SUBSIDIARY TO PIPE

WYOMING SPRINGS
SEGMENT 1
ROUND ROCK, TX

ROUND ROCK TEXAS

halff
13620 BRANTWICK DR
BLDG C, STE 100
AUSTIN, TX 78729
(512) 777-4800
TBPELS FIRM #312

Revision No.	Date	Description

F-312 4-14-23
STATE OF TEXAS
ANDREW M. L. DUTTON
117255
LICENSED
PROFESSIONAL ENGINEER

100% SUBMITTAL

Project No.:	36179.002
Issued:	4/14/2023
Drawn By:	AD
Checked By:	AD
Scale:	1"=40'

Sheet Title
CULVERT B
PLAN AND PROFILE

Sheet Number

Culvert	Return Period	Total Contributing Area (Acres)	Q (CFS)	Proposed Culverts								
				Size	Material	Slope (%)	Inlet/Outlet Control	Headwater Elevation (Allowable)	Capacity - Overtop (CFS)	Headwater	Outlet Velocity (FPS)	Outlet Depth (FT)
CULVERT C1	**25 YR**	0.26	2.10	18" CIRCULAR	RCP	1.00	Inlet	788.00	8.53	786.70	4.57	0.45
	100 YR		3.00							786.87	5.00	0.55

Culvert calculations performed utilizing HY-8 version 7.5

Culvert	Return Period	Total Contributing Area (Acres)	Q (CFS)	Proposed Culverts								
				Size	Material	Slope (%)	Inlet/Outlet Control	Headwater Elevation (Allowable)	Capacity - Overtop (CFS)	Headwater	Outlet Velocity (FPS)	Outlet Depth (FT)
CULVERT C2	**25 YR**	0.13	0.93	18" CIRCULAR	RCP	1.00	Inlet	789.00	8.53	787.42	3.70	0.29
	100 YR		1.33							787.52	4.08	0.35

Culvert calculations performed utilizing HY-8 version 7.5

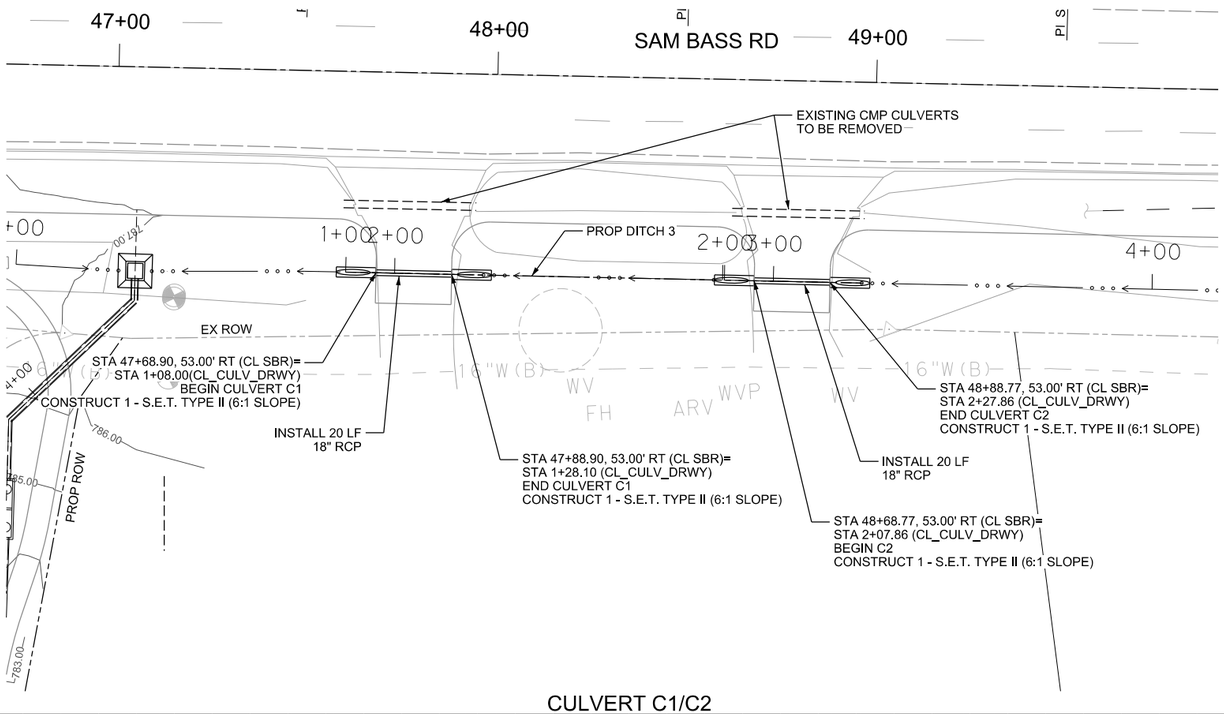

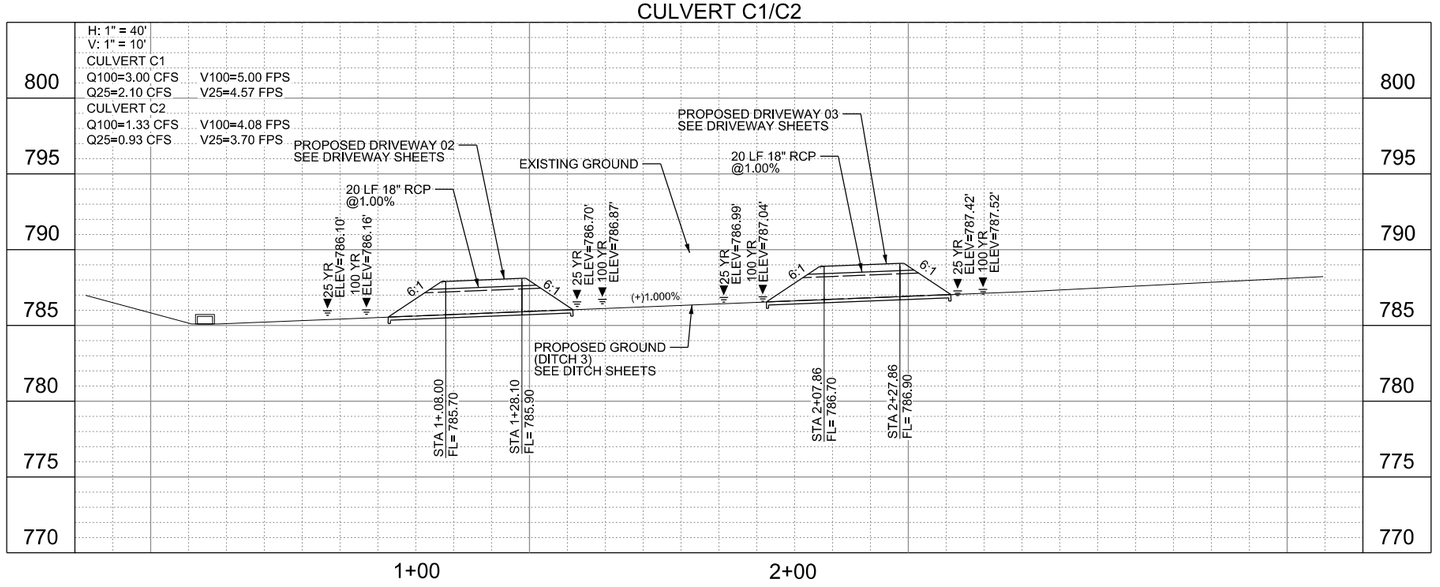

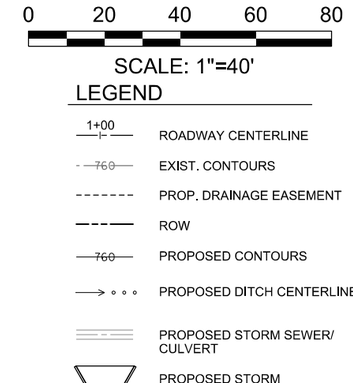

NOTES:

1. CONTRACTOR MUST FIELD VERIFY ALL EXISTING UTILITIES VERTICALLY AND HORIZONTALLY PRIOR TO CONSTRUCTION. IF CONFLICTS ARE ENCOUNTERED, OR ARE DIFFERENT THAN WHAT IS SHOWN, CONTRACTOR MUST NOTIFY THE ENGINEER IMMEDIATELY.
2. CONTRACTOR SHALL BE SOLELY RESPONSIBLE FOR ANY TEMPORARY DRAINAGE DURING CONSTRUCTION. ANY TEMPORARY DRAINAGE OPERATIONS WILL BE REMOVED BY THE CONTRACTOR AS REQUIRED BY THE ENGINEER AT THE CONTRACTOR'S ENTIRE EXPENSE.
3. OVERALL TRENCH SAFETY WILL REMAIN THE RESPONSIBILTY OF THE CONTRACTOR AND SHALL BE IN ACCORDANCE WITH THE LAWS OF THE STATE OF TEXAS AND THE U.S. OCCUPATIONAL SAFETY AND HEALTH ADMINISTRATION REGULATIONS.
4. ALL STORM SEWER BENDS AND WYES SHALL BE PRECAST UNLESS OTHERWISE NOTED.
5. CULVERT CALCULATIONS PERFORMED USING HY-8 VERSION 7.50.
6. SEE REMOVAL PLAN FOR MORE INFORMATION.
7. TAILWATER CONDITION FOR CULVERT D TAKEN FROM HGL AT MANHOLE. SEE DRAINAGE CALCULATIONS FOR MORE INFORMATION.

WYOMING SPRINGS
SEGMENT 1
ROUND ROCK, TX

ROUND ROCK TEXAS

halff
13620 BRANTWICK DR
BLDG C, STE 100
AUSTIN, TX 78729
(512) 777-4600
TBPELS FIRM #312

Revision No.	Date	Description

F-3172 4-14-23
STATE OF TEXAS
ANDREW M. L. DUTTON
117255
LICENSED
PROFESSIONAL ENGINEER

100% SUBMITTAL

Project No.:	36179.002
Issued:	4/14/2023
Drawn By:	AD
Checked By:	AD
Scale:	1"=40'

Sheet Title
CULVERT C
PLAN AND PROFILE

165
Sheet Number

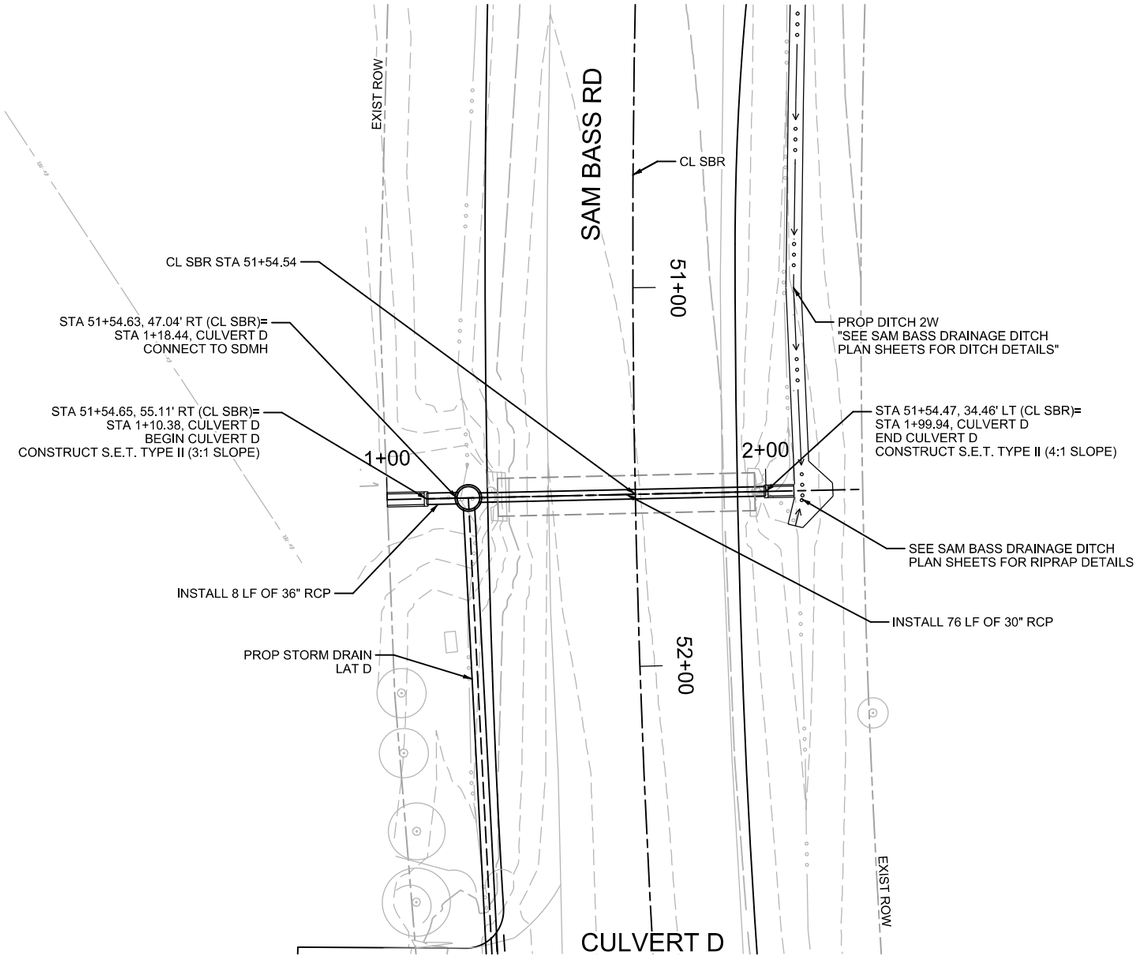

CULVERT D

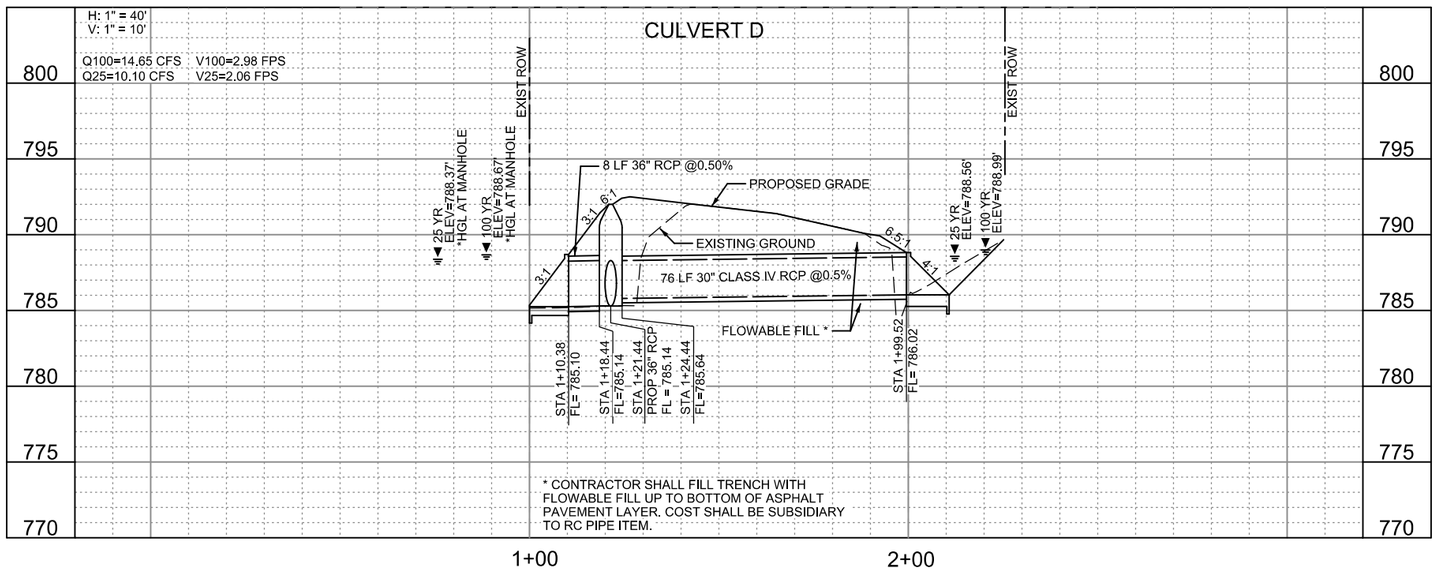

* CONTRACTOR SHALL FILL TRENCH WITH FLOWABLE FILL UP TO BOTTOM OF ASPHALT PAVEMENT LAYER. COST SHALL BE SUBSIDIARY TO RC PIPE ITEM.

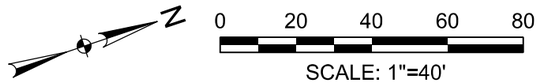

LEGEND

- 1+00 — ROADWAY CENTERLINE
- 760 — EXIST. CONTOURS
- PROP. DRAINAGE EASEMENT
- ROW
- 760 — PROPOSED CONTOURS
- PROPOSED DITCH CENTERLINE
- PROPOSED STORM SEWER/ CULVERT
- PROPOSED STORM HEADWALL
- PROPOSED CURB INLET
- STORM TROOPER
- PROPOSED AREA ZONE DRAIN
- PROPOSED MANHOLE

NOTES:

1. CONTRACTOR MUST FIELD VERIFY ALL EXISTING UTILITIES VERTICALLY AND HORIZONTALLY PRIOR TO CONSTRUCTION. IF CONFLICTS ARE ENCOUNTERED, OR ARE DIFFERENT THAN WHAT IS SHOWN, CONTRACTOR MUST NOTIFY THE ENGINEER IMMEDIATELY.
2. CONTRACTOR SHALL BE SOLELY RESPONSIBLE FOR ANY TEMPORARY DRAINAGE DURING CONSTRUCTION. ANY TEMPORARY DRAINAGE OPERATIONS WILL BE REMOVED BY THE CONTRACTOR AS REQUIRED BY THE ENGINEER AT THE CONTRACTOR'S ENTIRE EXPENSE.
3. OVERALL TRENCH SAFETY WILL REMAIN THE RESPONSIBILTY OF THE CONTRACTOR AND SHALL BE IN ACCORDANCE WITH THE LAWS OF THE STATE OF TEXAS AND THE U.S. OCCUPATIONAL SAFETY AND HEALTH ADMINISTRATION REGULATIONS.
4. ALL STORM SEWER BENDS AND WYES SHALL BE PRECAST UNLESS OTHERWISE NOTED.
5. CULVERT CALCULATIONS PERFORMED USING HY-8 VERSION 7.50.
6. SEE REMOVAL PLAN FOR MORE INFORMATION.
7. TAILWATER CONDITION FOR CULVERT D TAKEN FROM HGL AT MANHOLE. SEE DRAINAGE CALCULATIONS FOR MORE INFORMATION.

WYOMING SPRINGS
SEGMENT 1
ROUND ROCK, TX

ROUND ROCK TEXAS

halff
13620 BRANTWICK DR
BLDG C, STE 100
AUSTIN, TX 78729
(512) 777-4600
TBPELS FIRM #312

Revision No.	Date	Description

STATE OF TEXAS
MELANIE S. CLEAVELIN
108945
LICENSED
PROFESSIONAL ENGINEER
4/5/23

*THE SEAL APPEARING ON THIS DOCUMENT WAS AUTHORIZED BY MELANIE S. CLEAVELIN, P.E. 108945 ON 4/5/2023. IT IS A VIOLATION OF THE TEXAS ENGINEERING PRACTICE ACT FOR ANY PERSON TO ALTER THIS DOCUMENT IN ANY MANNER AND SPECIFICALLY THE SEAL APPEARING ON THIS DOCUMENT WITHOUT THE CONSENT OF THE ENGINEER RESPONSIBLE FOR ITS PREPARATION. IT IS ALSO AN OFFENSE UNDER THE TEXAS ENGINEERING PRACTICE ACT, THE RECORD COPY OF THIS DRAWING IS ON FILE AT THE OFFICES OF HALFF ASSOCIATES, INC., 1201 NORTH BOWSER RD, RICHARDSON, TEXAS, 75081 (469) 296-4700.

100% SUBMITTAL

Project No.:	36179.002
Issued:	4/6/2023
Drawn By:	TM
Checked By:	MC
Scale:	1" = 40'

Sheet Title
CULVERT D
PLAN AND PROFILE

166
Sheet Number

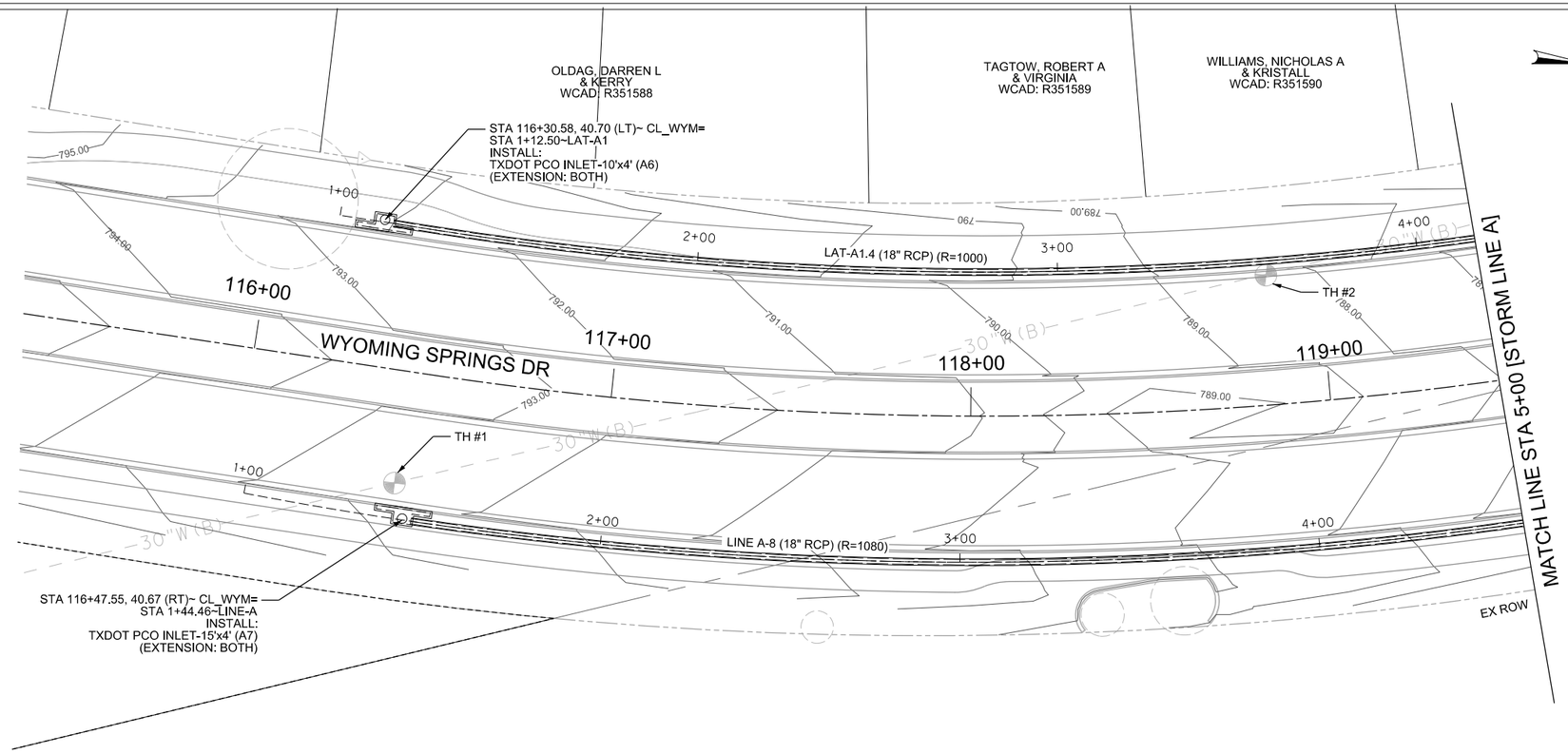



0 20 40 60 80

SCALE: 1"=40'

LEGEND

- ROADWAY CENTERLINE
- EXIST. CONTOURS
- PROP. DRAINAGE EASEMENT
- ROW
- PROPOSED CONTOURS
- PROPOSED DITCH CENTERLINE
- PROPOSED STORM SEWER/ CULVERT
- PROPOSED STORM HEADWALL
- PROPOSED CURB INLET
- STORM TROOPER
- PROPOSED AREA ZONE DRAIN
- PROPOSED MANHOLE

NOTES:

1. ALL BENDS,WYES, AND TRANSITIONS SHALL BE PRE-FABRICATED.
2. ALL MANHOLES SHALL UTILIZE CITY OF ROUND ROCK FRAME AND COVERS.
3. SEE HYDRAULIC CALCULATIONS SHEET, LINK CONFIGURATION AND LOCATION OF STATION/OFFSET PER STRUCTURE TYPE.
4. ALL NON-CITY INFRASTRUCTRE INCLUDING GAS, ELECTRIC, CABLE, AND TELECOMMUNICATIONS SHALL TRAVERSE UNDERNEATH CITY INFRASTUCTURE. THIS INCLUDES, BUT IS NOT LIMITED TO WATER LINES AND STORM SEWER, WITH A MINIMUM OUTSIDE-TO OUTSIDE CLEARANCE OF 18-INCHES.

STORM LINE A

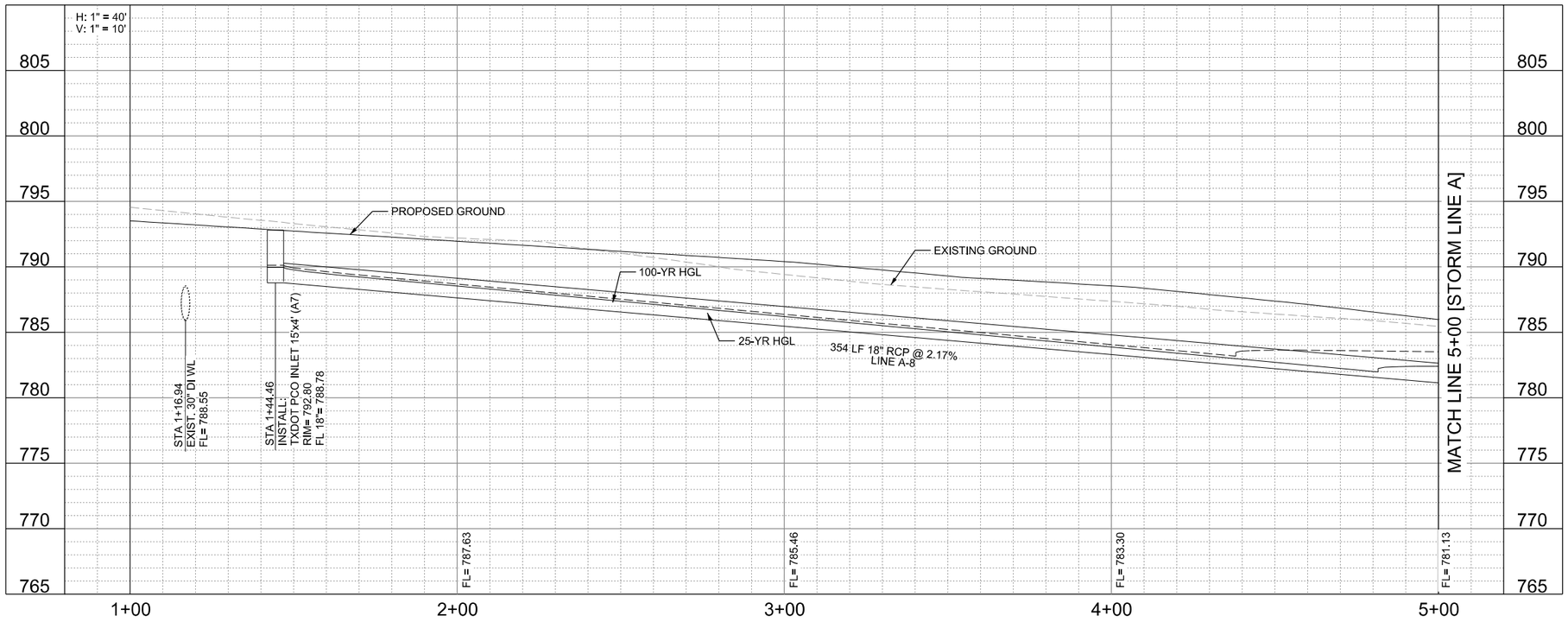

WYOMING SPRINGS
SEGMENT 1
ROUND ROCK, TX

ROUND ROCK TEXAS

halff
13620 BRANTWICK DR
BLDG C, STE 100
AUSTIN, TX 78729
(512) 777-4600
TBPELS FIRM #312

Revision No.	Date	Description

F-312 4/5/23
STATE OF TEXAS
JEFFREY L NAGY
133255
LICENSED
PROFESSIONAL ENGINEER

100% SUBMITTAL

Project No.:	36179.002
Issued:	4/17/2023
Drawn By:	SG
Checked By:	JN
Scale:	1"=40'

Sheet Title
WYOMING SPRINGS STORM DRAIN PLAN & PROFILE (1 OF 13)

167
Sheet Number

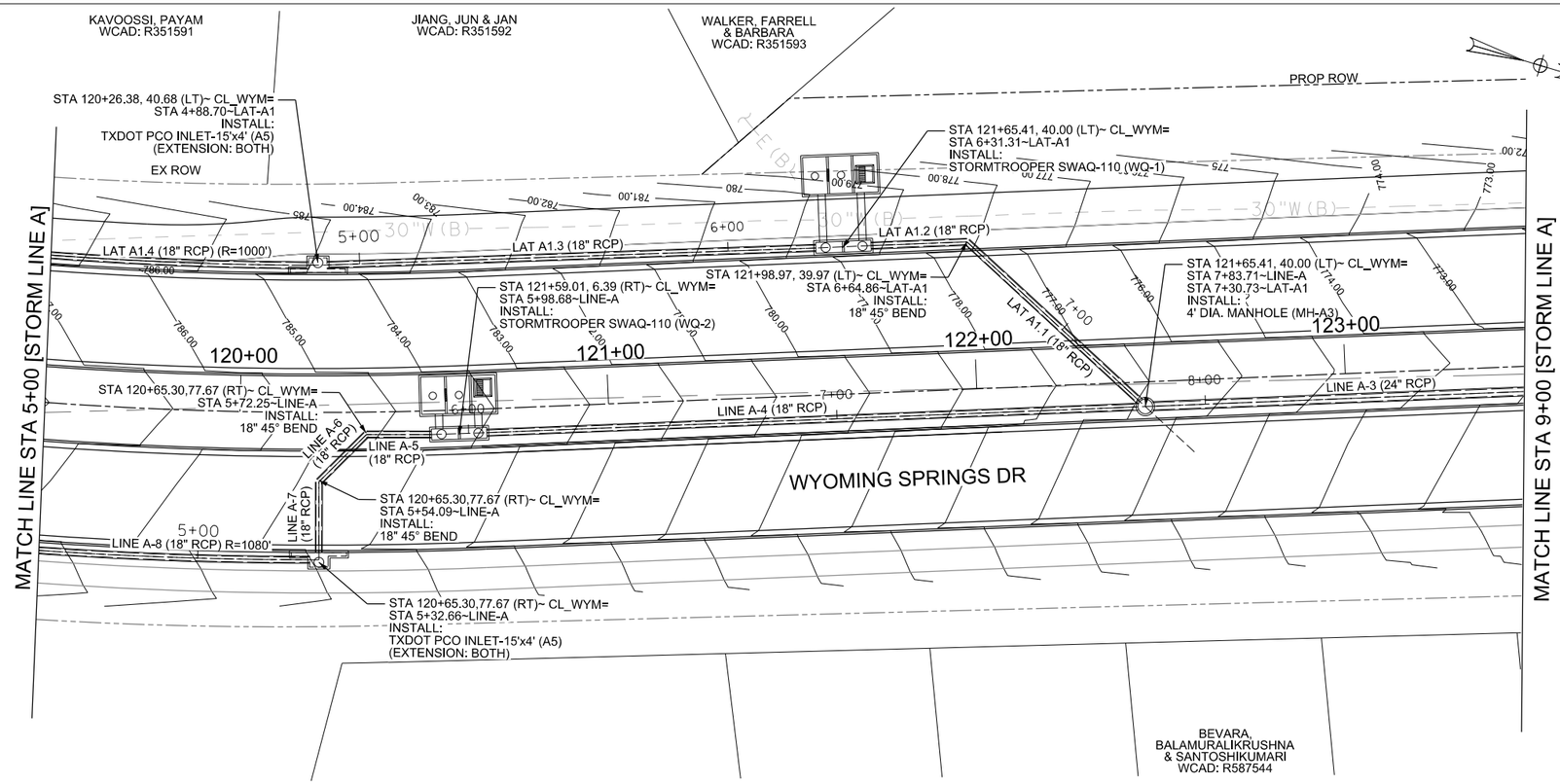

0 20 40 60 80

SCALE: 1"=40'

LEGEND

- 1+00 — ROADWAY CENTERLINE
- 760 — EXIST. CONTOURS
- PROP. DRAINAGE EASEMENT
- ROW
- 760 — PROPOSED CONTOURS
- PROPOSED DITCH CENTERLINE
- PROPOSED STORM SEWER/ CULVERT
- PROPOSED STORM HEADWALL
- PROPOSED CURB INLET
- STORM TROOPER
- PROPOSED AREA ZONE DRAIN
- PROPOSED MANHOLE

NOTES:

1. ALL BENDS,WYES, AND TRANSITIONS SHALL BE PRE-FABRICATED.
2. ALL MANHOLES SHALL UTILIZE CITY OF ROUND ROCK FRAME AND COVERS.
3. SEE HYDRAULIC CALCULATIONS SHEET, LINK CONFIGURATION AND LOCATION OF STATION/OFFSET PER STRUCTURE TYPE.
4. ALL NON-CITY INFRASTRUCTRE INCLUDING GAS, ELECTRIC, CABLE, AND TELECOMMUNICATIONS SHALL TRAVERSE UNDERNEATH CITY INFRASTUCTURE. THIS INCLUDES, BUT IS NOT LIMITED TO WATER LINES AND STORM SEWER, WITH A MINIMUM OUTSIDE-TO OUTSIDE CLEARANCE OF 18-INCHES.

STORM LINE A

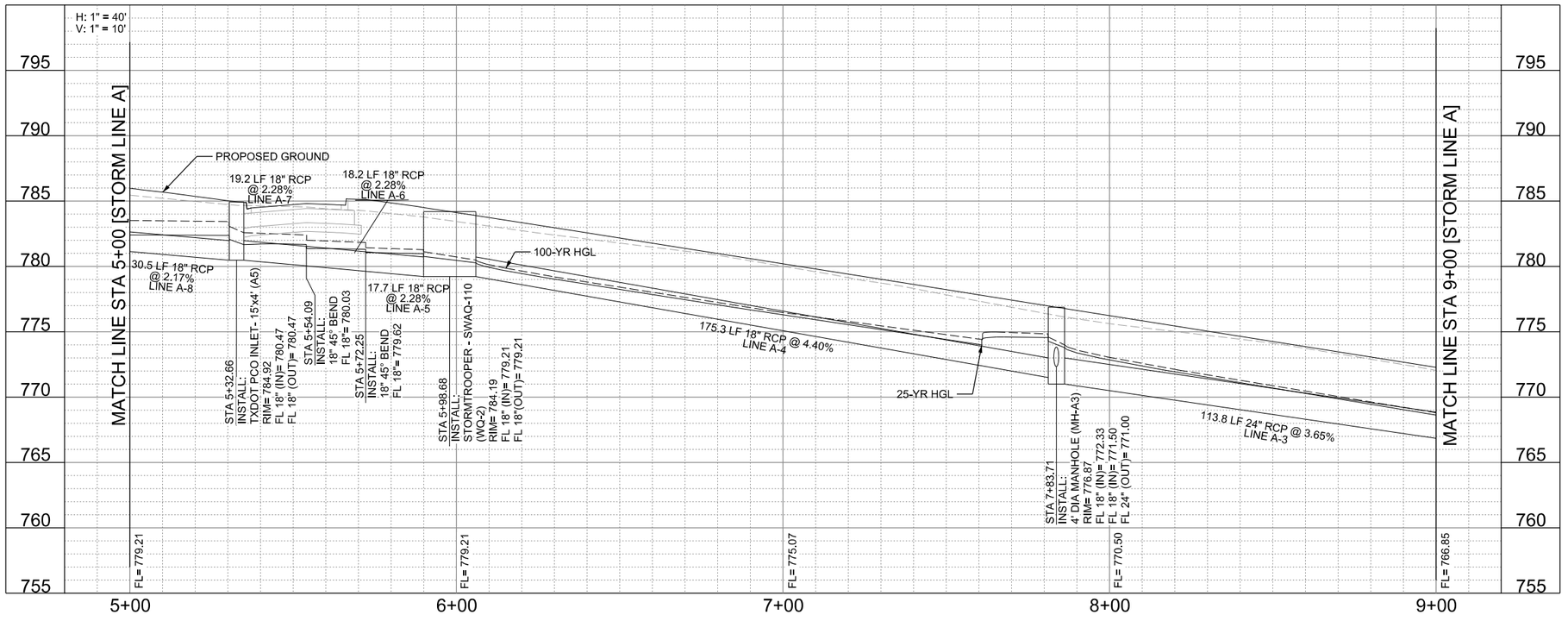

WYOMING SPRINGS
SEGMENT 1
ROUND ROCK, TX

ROUND ROCK TEXAS

halff
13620 BRANTWICK DR
BLDG C, STE 100
AUSTIN, TX 78729
(512) 777-4600
TBPELS FIRM #312

Revision No.	Date	Description

F-312 4/17/23
STATE OF TEXAS
JEFFREY L. NAGY
133255
LICENSED
PROFESSIONAL ENGINEER

100% SUBMITTAL

Project No.:	36179.002
Issued:	4/17/2023
Drawn By:	SG
Checked By:	JN
Scale:	1"=40'

Sheet Title
WYOMING SPRINGS
STORM DRAIN PLAN &
PROFILE (2 OF 13)

168
Sheet Number

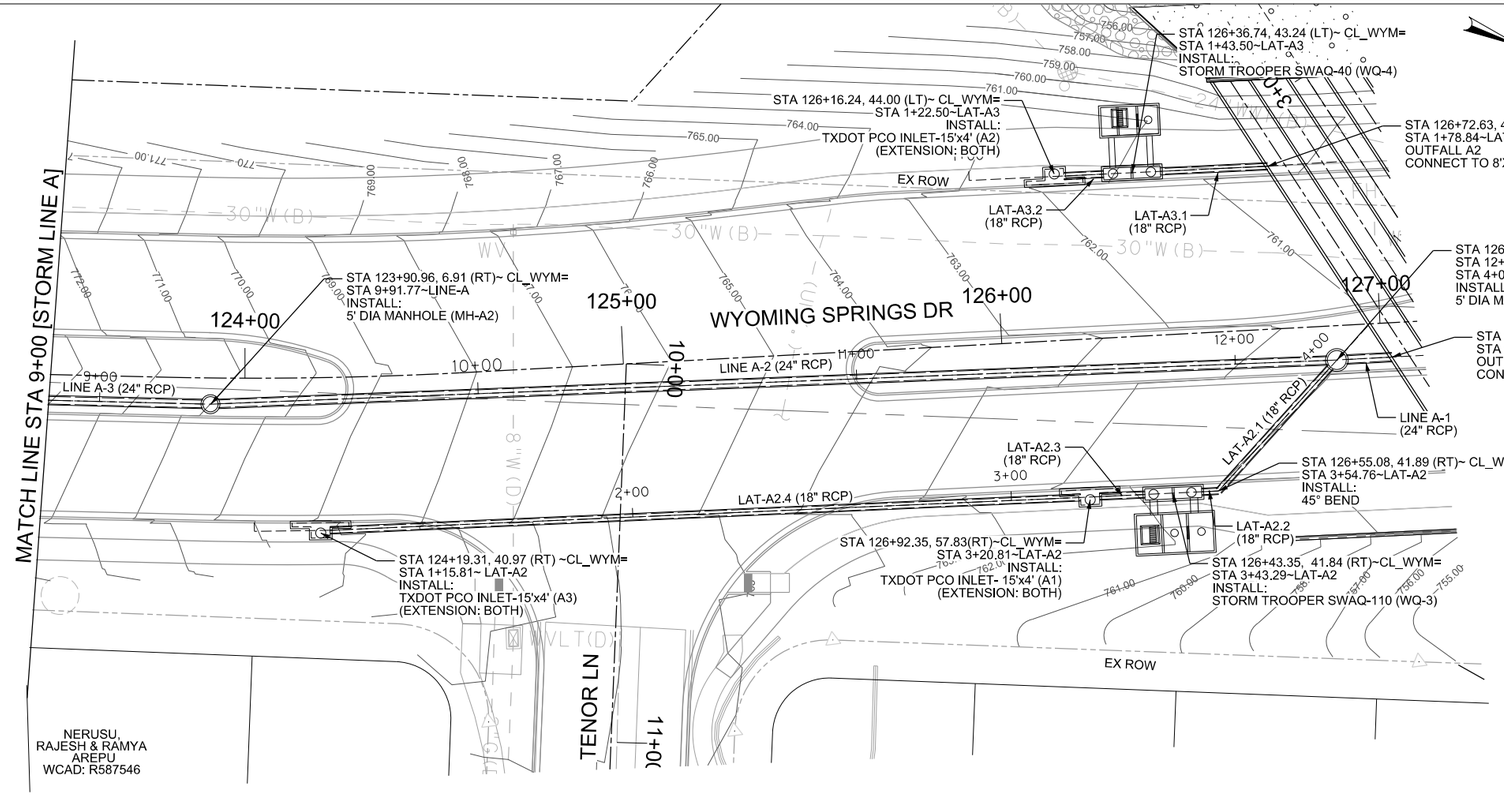

LEGEND

- 1+00 — ROADWAY CENTERLINE
- 760 — EXIST. CONTOURS
- PROP. DRAINAGE EASEMENT
- ROW
- 760 — PROPOSED CONTOURS
- PROPOSED DITCH CENTERLINE
- PROPOSED STORM SEWER/ CULVERT
- PROPOSED STORM HEADWALL
- PROPOSED CURB INLET
- STORM TROOPER
- PROPOSED AREA ZONE DRAIN
- PROPOSED MANHOLE

NOTES:

1. ALL BENDS,WYES, AND TRANSITIONS SHALL BE PRE-FABRICATED.
2. ALL MANHOLES SHALL UTILIZE CITY OF ROUND ROCK FRAME AND COVERS.
3. SEE HYDRAULIC CALCULATIONS SHEET, LINK CONFIGURATION AND LOCATION OF STATION/OFFSET PER STRUCTURE TYPE.
4. ALL NON-CITY INFRASTRUCTRE INCLUDING GAS, ELECTRIC, CABLE, AND TELECOMMUNICATIONS SHALL TRAVERSE UNDERNEATH CITY INFRASTUCTURE. THIS INCLUDES, BUT IS NOT LIMITED TO WATER LINES AND STORM SEWER, WITH A MINIMUM OUTSIDE-TO OUTSIDE CLEARANCE OF 18-INCHES.

STORM LINE A

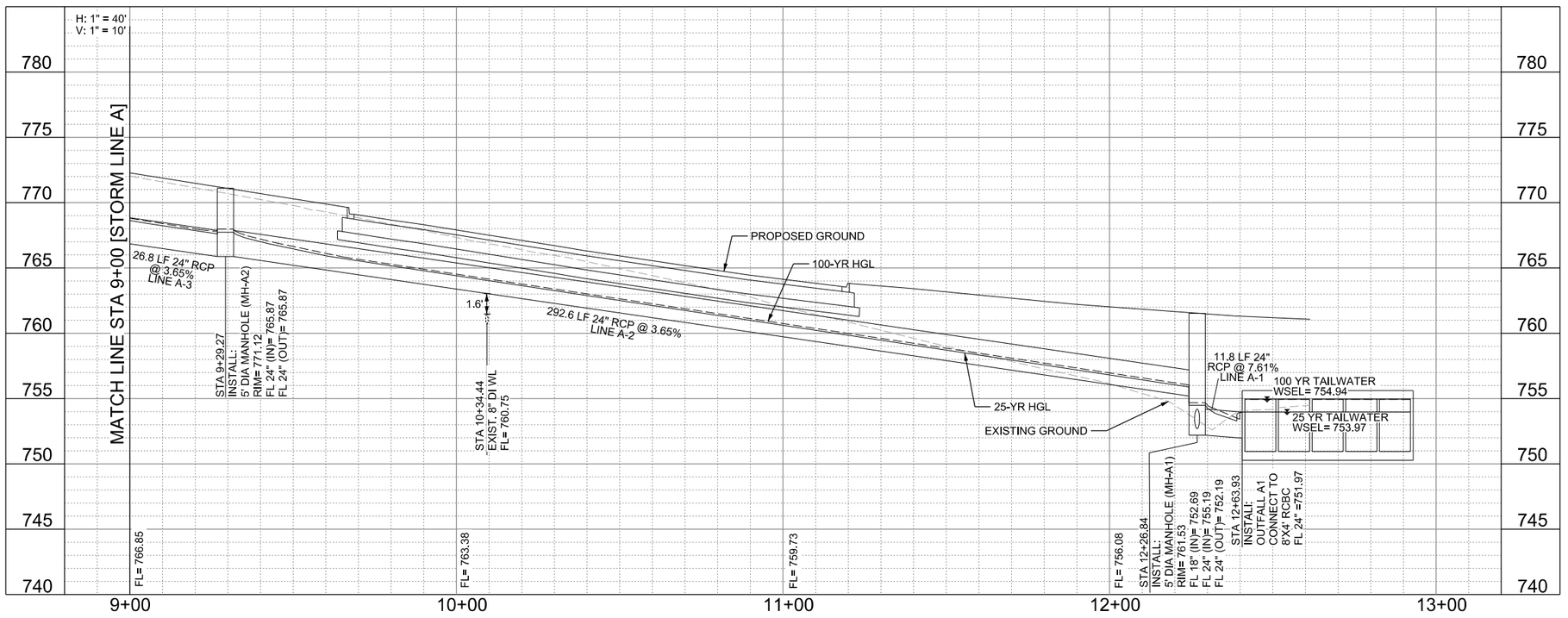

WYOMING SPRINGS
SEGMENT 1
ROUND ROCK, TX

ROUND ROCK TEXAS

halff
13620 BRANTWICK DR
BLDG C, STE 100
AUSTIN, TX 78729
(512) 777-4600
TBPELS FIRM #312

Revision No.	Date	Description

STATE OF TEXAS
JEFFREY L NAGY
133255
LICENSED
PROFESSIONAL ENGINEER
4/5/23

100% SUBMITTAL

Project No.:	36179.002
Issued:	4/17/2023
Drawn By:	SG
Checked By:	JN
Scale:	1"=40'

Sheet Title
WYOMING SPRINGS
STORM DRAIN PLAN & PROFILE (3 OF 13)

169
Sheet Number

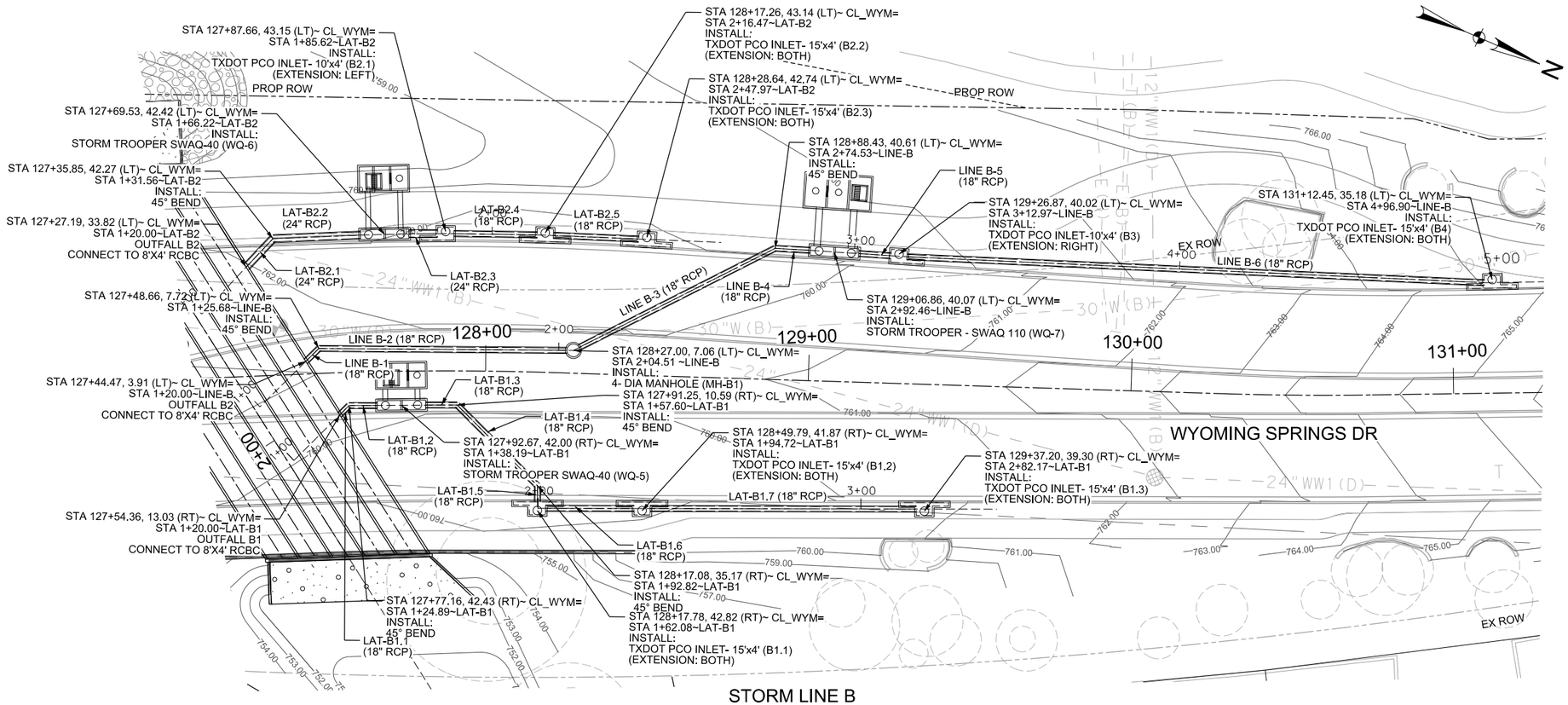

STORM LINE B

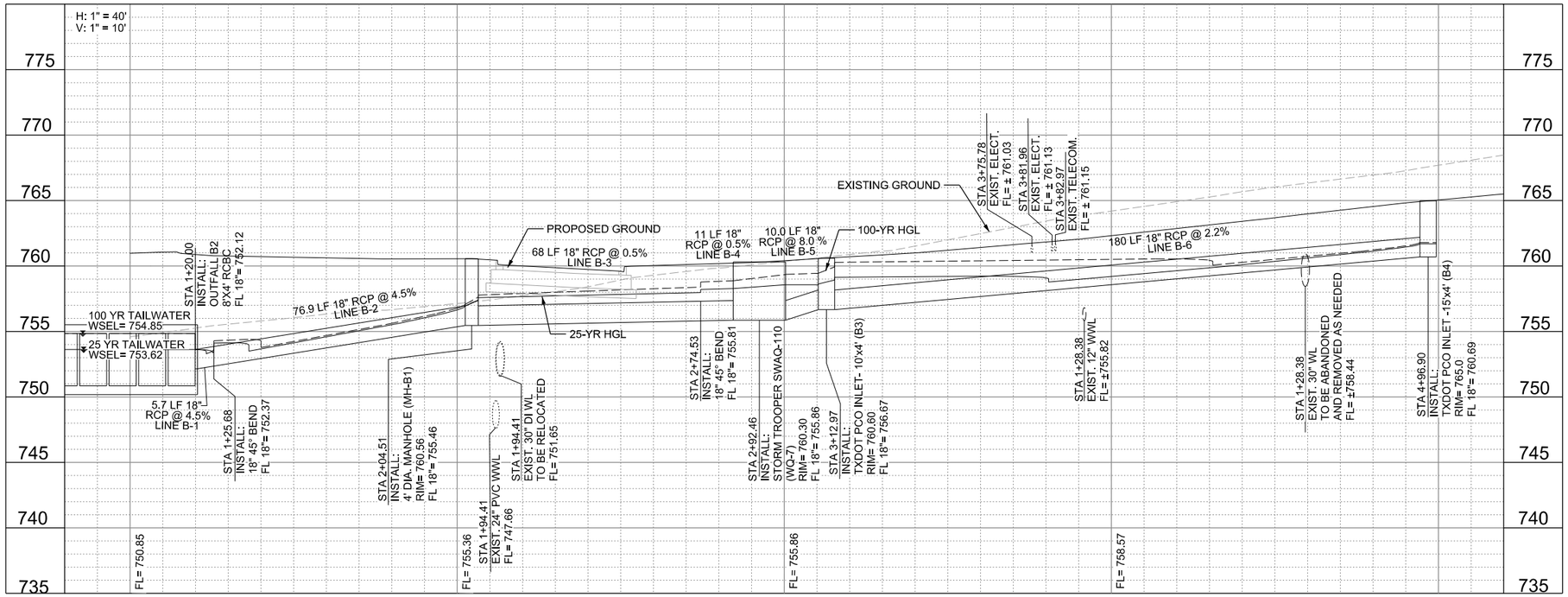

NOTES:

1. CALLOUTS ARE MEASURED TO BACK OF CURB OR EDGE OF PAVEMENT UNLESS OTHERWISE NOTED.
2. ALL STA/OFFSET CALLOUTS ARE FROM WYM/TNR/SBR UNLESS OTHERWISE NOTED.
3. SEE WYOMING SPRINGS DITCH PLAN SHEETS FOR MORE INFORMATION ON DITCHES.
4. ALL EXISTING M/H & WATER VALVES SHALL BE RAISED TO FINAL GRADE PRIOR TO PAVING PER CORR ITEM NO. 506.

WYOMING SPRINGS
SEGMENT 1
ROUND ROCK, TX

ROUND ROCK TEXAS

halff
13620 BRANTWICK DR
BLDG C, STE 100
AUSTIN, TX 78729
(512) 777-4600
TBPELS FIRM #312

Revision No.	Date	Description

F-312 4/5/23
STATE OF TEXAS
JEFFREY L NAGY
133255
LICENSED PROFESSIONAL ENGINEER

100% SUBMITTAL

Project No.:	36179.002
Issued:	4/17/2023
Drawn By:	SG
Checked By:	JN
Scale:	1"=40'

Sheet Title
WYOMING SPRINGS
STORM DRAIN PLAN & PROFILE (4 OF 13)

170
Sheet Number

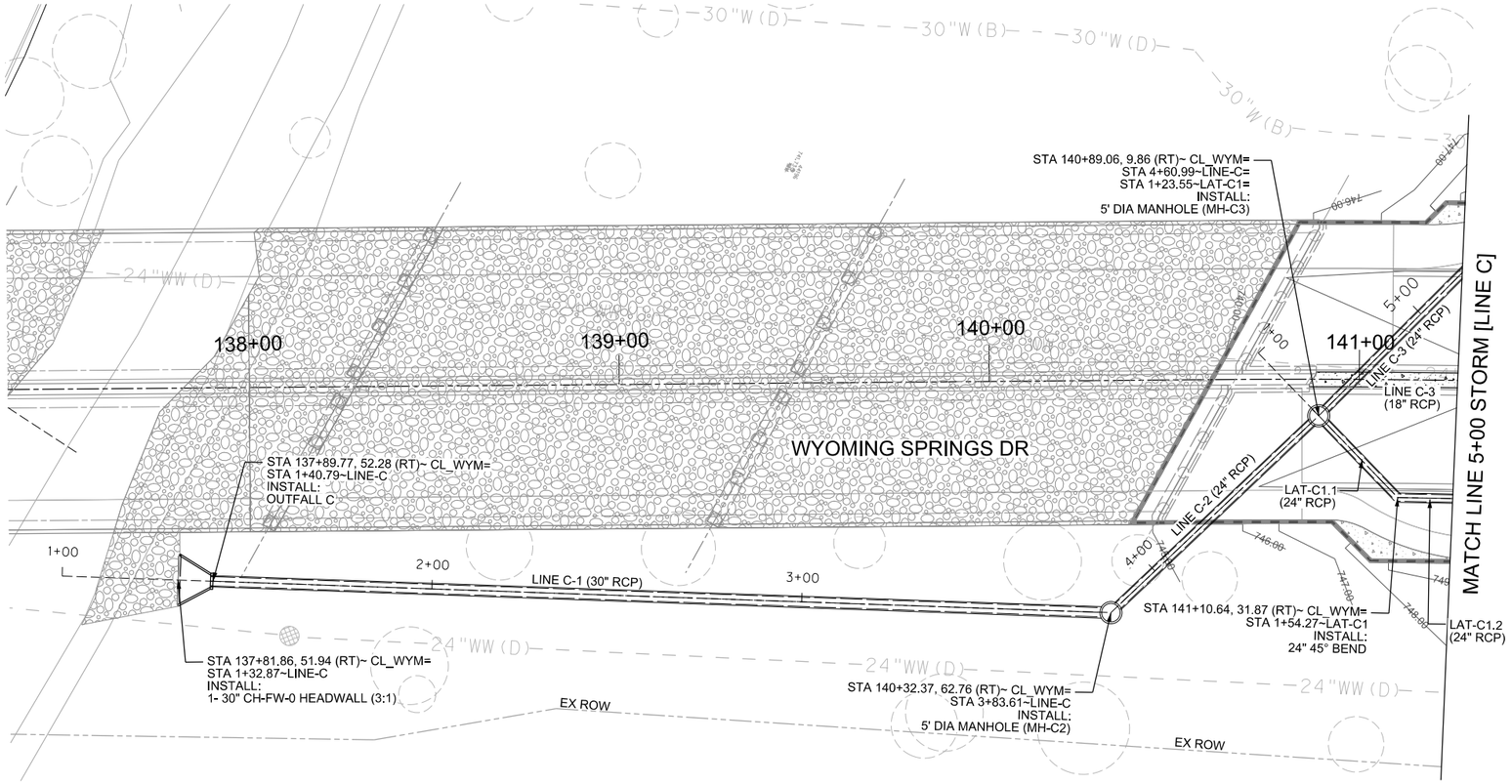



0 20 40 60 80

SCALE: 1"=40'

LEGEND

- 1+00 — ROADWAY CENTERLINE
- 760 — EXIST. CONTOURS
- PROP. DRAINAGE EASEMENT
- ROW
- 760 — PROPOSED CONTOURS
- PROPOSED DITCH CENTERLINE
- PROPOSED STORM SEWER/ CULVERT
- PROPOSED STORM HEADWALL
- PROPOSED CURB INLET
- STORM TROOPER
- PROPOSED AREA ZONE DRAIN
- PROPOSED MANHOLE

NOTES:

1. ALL BENDS,WYES, AND TRANSITIONS SHALL BE PRE-FABRICATED.
2. ALL MANHOLES SHALL UTILIZE CITY OF ROUND ROCK FRAME AND COVERS.
3. SEE HYDRAULIC CALCULATIONS SHEET, LINK CONFIGURATION AND LOCATION OF STATION/OFFSET PER STRUCTURE TYPE.
4. ALL NON-CITY INFRASTRUCTRE INCLUDING GAS, ELECTRIC, CABLE, AND TELECOMMUNICATIONS SHALL TRAVERSE UNDERNEATH CITY INFRASTUCTURE. THIS INCLUDES, BUT IS NOT LIMITED TO WATER LINES AND STORM SEWER, WITH A MINIMUM OUTSIDE-TO OUTSIDE CLEARANCE OF 18-INCHES.

STORM LINE C

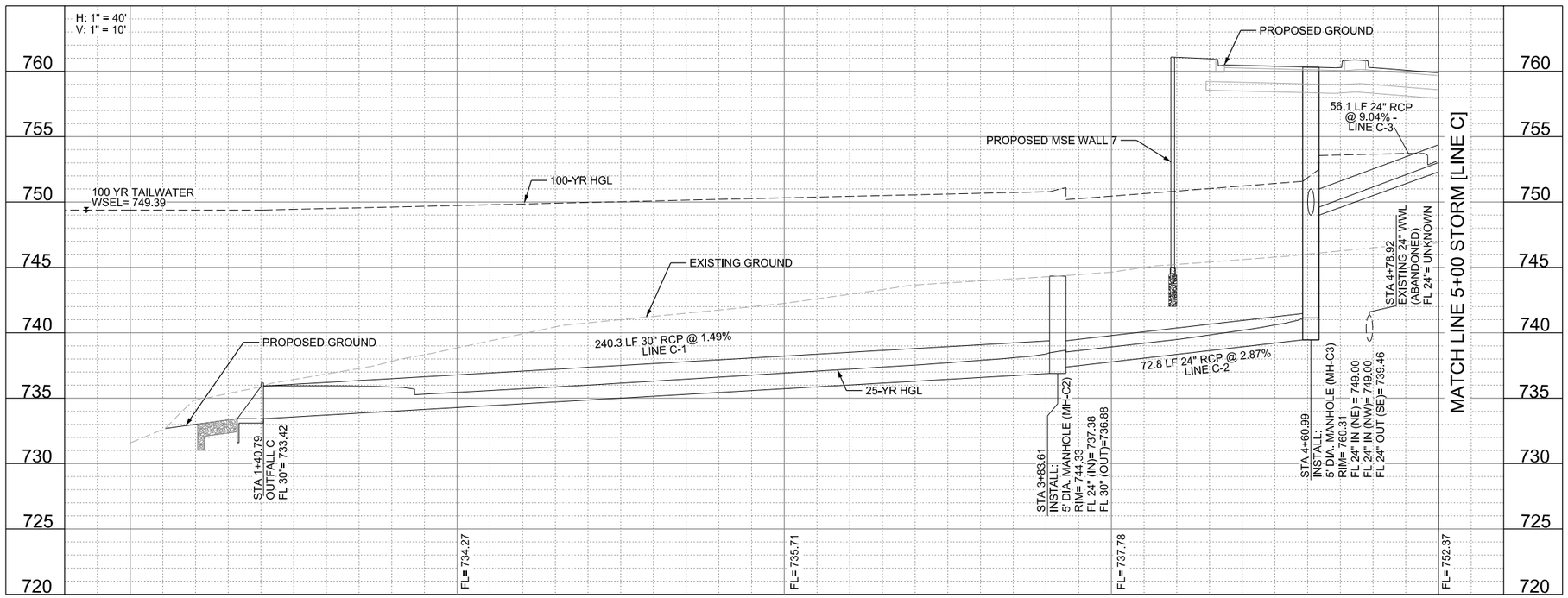

WYOMING SPRINGS
SEGMENT 1
ROUND ROCK, TX

ROUND ROCK TEXAS

halff
13620 BRANTWICK DR
BLDG C, STE 100
AUSTIN, TX 78729
(512) 777-4800
TBPELS FIRM #312

Revision No.	Date	Description

F-312 4/5/23
STATE OF TEXAS
JEFFREY L. NAGY
133255
LICENSED
PROFESSIONAL ENGINEER

100% SUBMITTAL

Project No.:	36179.002
Issued:	4/28/2023
Drawn By:	SG
Checked By:	JN
Scale:	1"=40'

Sheet Title
WYOMING SPRINGS
STORM DRAIN PLAN & PROFILE (5 OF 13)

171
Sheet Number

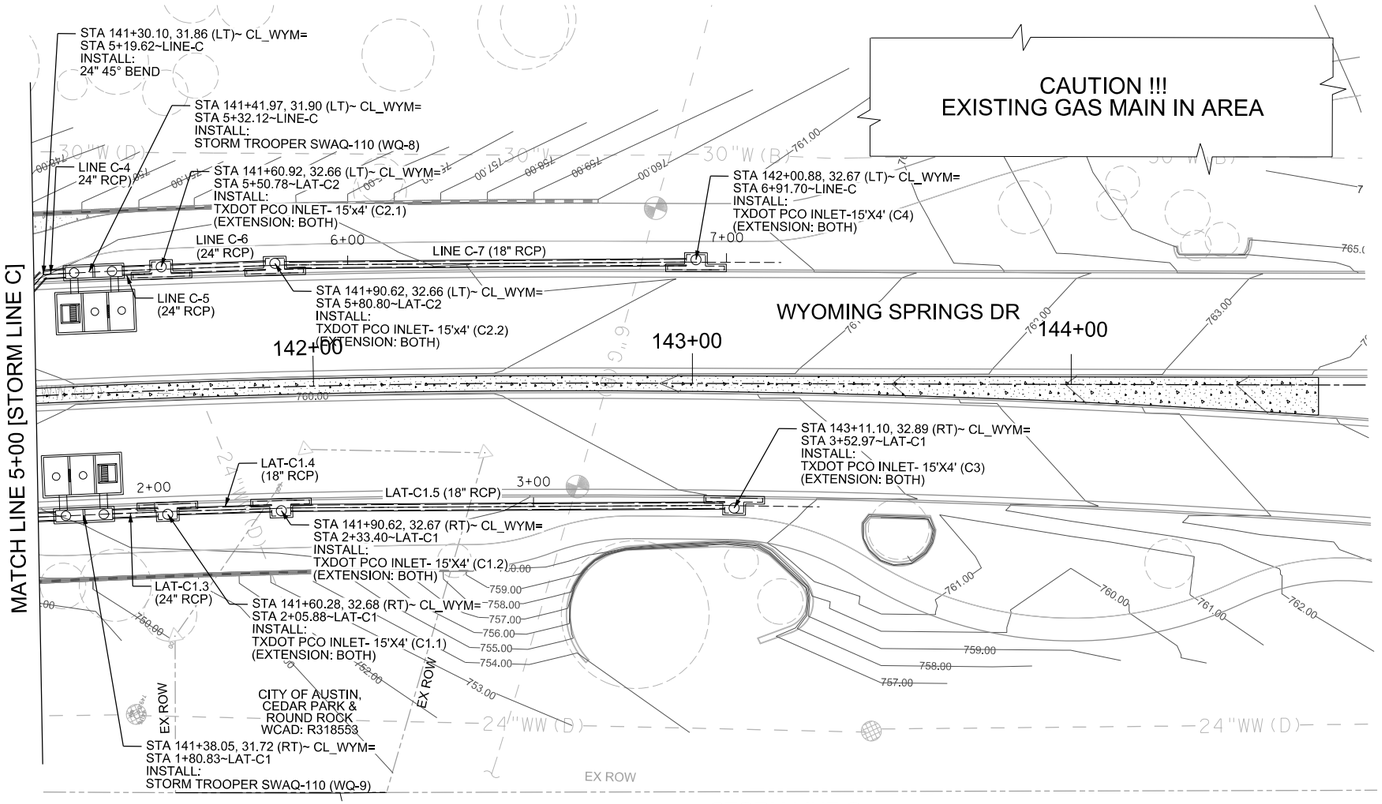

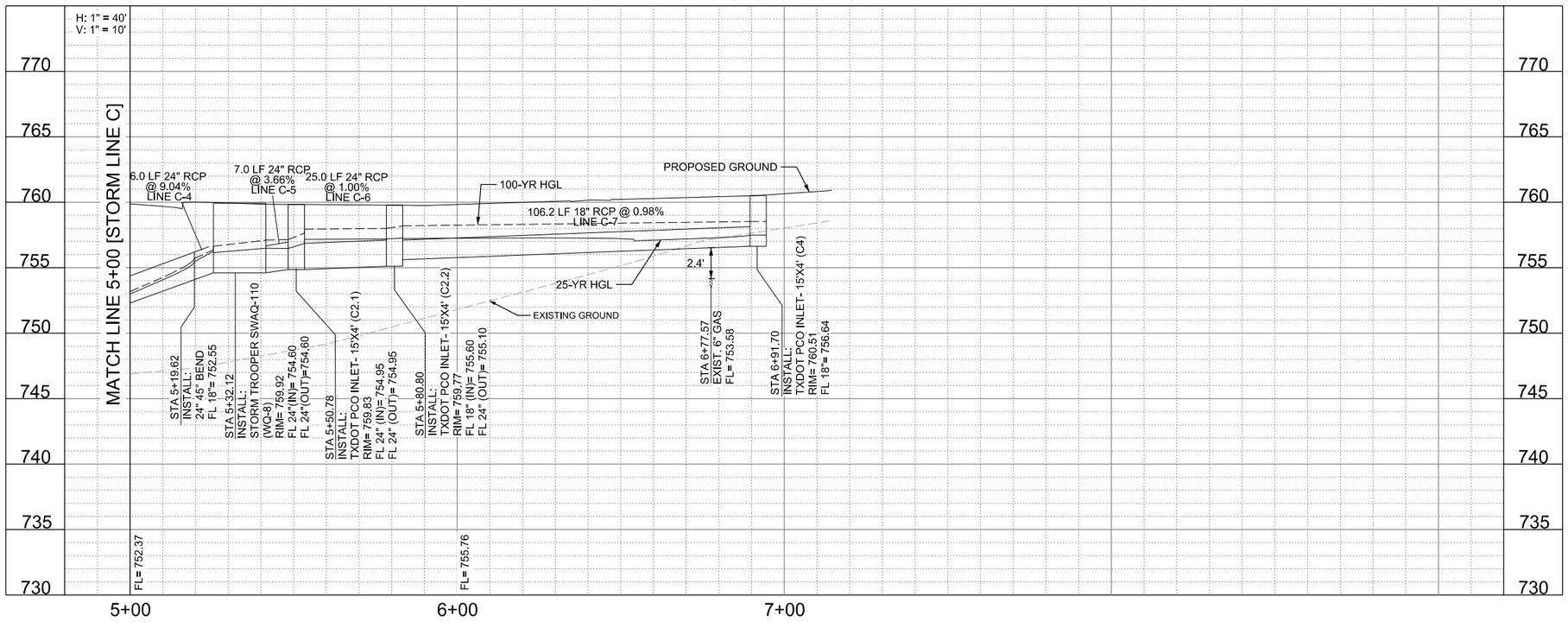



0 20 40 60 80

SCALE: 1"=40'

LEGEND

- 1+00 — ROADWAY CENTERLINE
- 760 — EXIST. CONTOURS
- PROP. DRAINAGE EASEMENT
- ROW
- 760 — PROPOSED CONTOURS
- PROPOSED DITCH CENTERLINE
- PROPOSED STORM SEWER/ CULVERT
- PROPOSED STORM HEADWALL
- PROPOSED CURB INLET
- STORM TROOPER
- PROPOSED AREA ZONE DRAIN
- PROPOSED MANHOLE

NOTES:

1. ALL BENDS,WYES, AND TRANSITIONS SHALL BE PRE-FABRICATED.
2. ALL MANHOLES SHALL UTILIZE CITY OF ROUND ROCK FRAME AND COVERS.
3. SEE HYDRAULIC CALCULATIONS SHEET, LINK CONFIGURATION AND LOCATION OF STATION/OFFSET PER STRUCTURE TYPE.
4. ALL NON-CITY INFRASTRUCTRE INCLUDING GAS, ELECTRIC, CABLE, AND TELECOMMUNICATIONS SHALL TRAVERSE UNDERNEATH CITY INFRASTUCTURE. THIS INCLUDES, BUT IS NOT LIMITED TO WATER LINES AND STORM SEWER, WITH A MINIMUM OUTSIDE-TO OUTSIDE CLEARANCE OF 18-INCHES.

WYOMING SPRINGS
SEGMENT 1
ROUND ROCK, TX

ROUND ROCK TEXAS

halff
13620 BRANTWICK DR
BLDG C, STE 100
AUSTIN, TX 78729
(512) 777-4800
TBPELS FIRM #312

Revision No.	Date	Description

F-312 4/5/23
STATE OF TEXAS
JEFFREY L. NAGY
133255
LICENSED
PROFESSIONAL ENGINEER

100% SUBMITTAL

Project No.:	36179.002
Issued:	4/17/2023
Drawn By:	SG
Checked By:	JN
Scale:	1"=40'

Sheet Title
WYOMING SPRINGS STORM DRAIN PLAN & PROFILE (6 OF 13)

172
Sheet Number

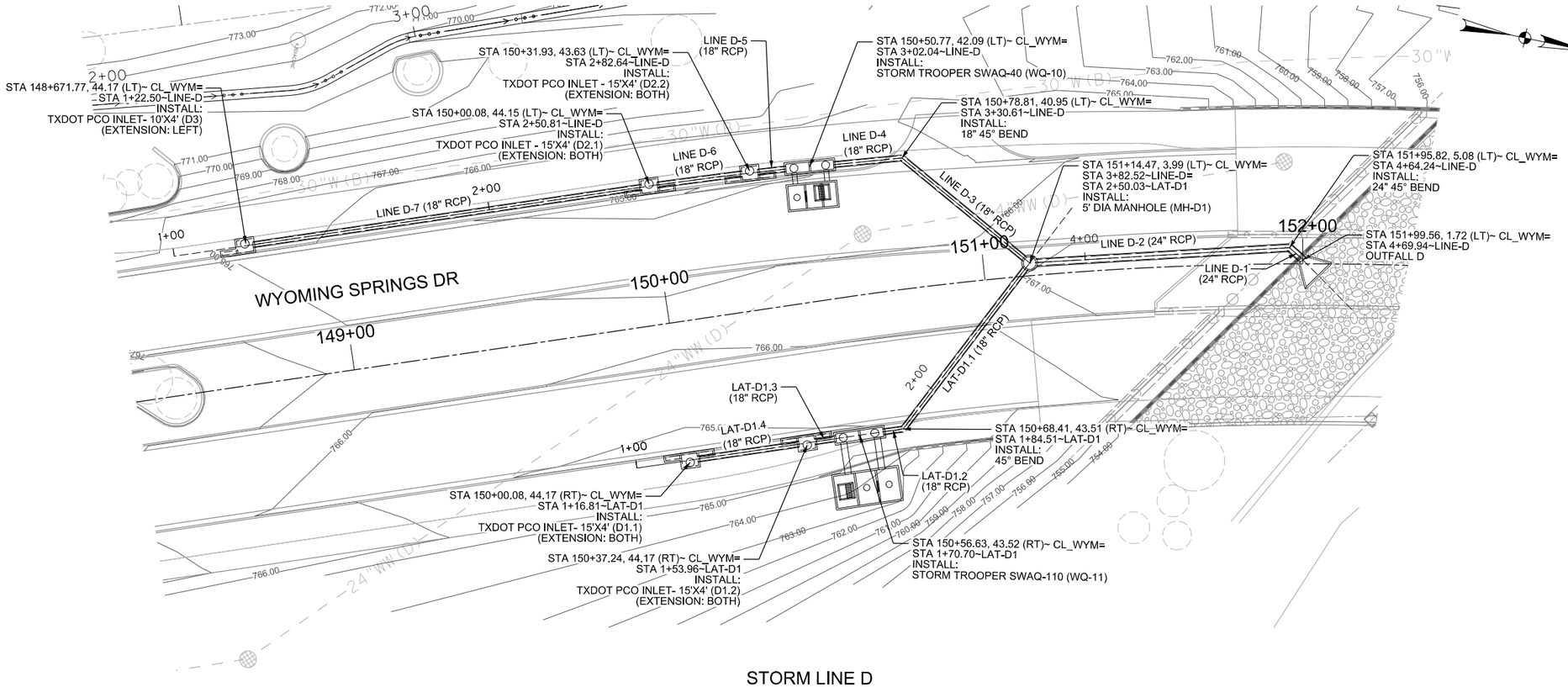

LEGEND

- 1+00 — ROADWAY CENTERLINE
- 760 — EXIST. CONTOURS
- PROP. DRAINAGE EASEMENT
- ROW
- 760 — PROPOSED CONTOURS
- PROPOSED DITCH CENTERLINE
- PROPOSED STORM SEWER/ CULVERT
- PROPOSED STORM HEADWALL
- PROPOSED CURB INLET
- STORM TROOPER
- PROPOSED AREA ZONE DRAIN
- PROPOSED MANHOLE

NOTES:

1. ALL BENDS,WYES, AND TRANSITIONS SHALL BE PRE-FABRICATED.
2. ALL MANHOLES SHALL UTILIZE CITY OF ROUND ROCK FRAME AND COVERS.
3. SEE HYDRAULIC CALCULATIONS SHEET, LINK CONFIGURATION AND LOCATION OF STATION/OFFSET PER STRUCTURE TYPE.
4. ALL NON-CITY INFRASTRUCTRE INCLUDING GAS, ELECTRIC, CABLE, AND TELECOMMUNICATIONS SHALL TRAVERSE UNDERNEATH CITY INFRASTUCTURE. THIS INCLUDES, BUT IS NOT LIMITED TO WATER LINES AND STORM SEWER, WITH A MINIMUM OUTSIDE-TO OUTSIDE CLEARANCE OF 18-INCHES.

STORM LINE D

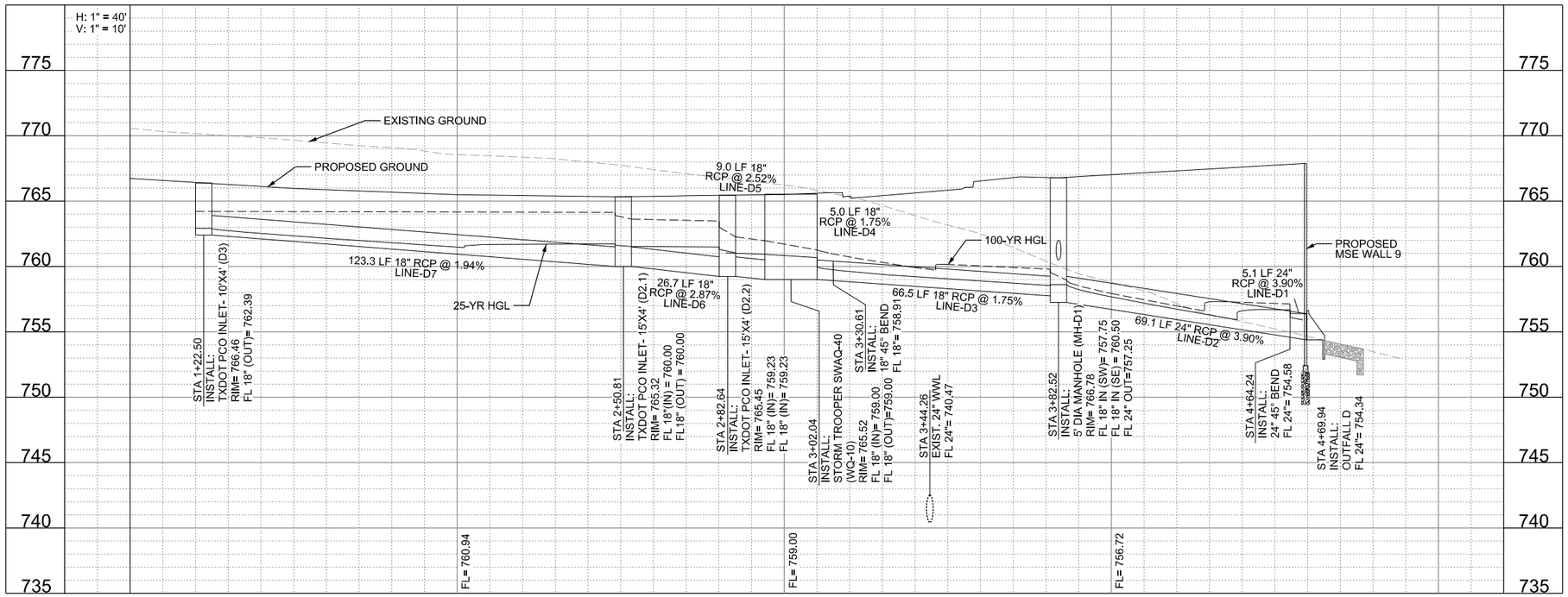

WYOMING SPRINGS
SEGMENT 1
ROUND ROCK, TX

ROUND ROCK TEXAS

halff
13620 BRANTWICK DR
BLDG C, STE 100
AUSTIN, TX 78729
(512) 777-4600
TBPELS FIRM #312

Revision No.	Date	Description

STATE OF TEXAS
JEFFREY L NAGY
133255
LICENSED
PROFESSIONAL ENGINEER
4/28/23

100% SUBMITTAL

Project No.:	36179.002
Issued:	4/28/2023
Drawn By:	SG
Checked By:	JN
Scale:	1"=40'

Sheet Title
WYOMING SPRINGS
STORM DRAIN PLAN & PROFILE (7 OF 13)

173
Sheet Number

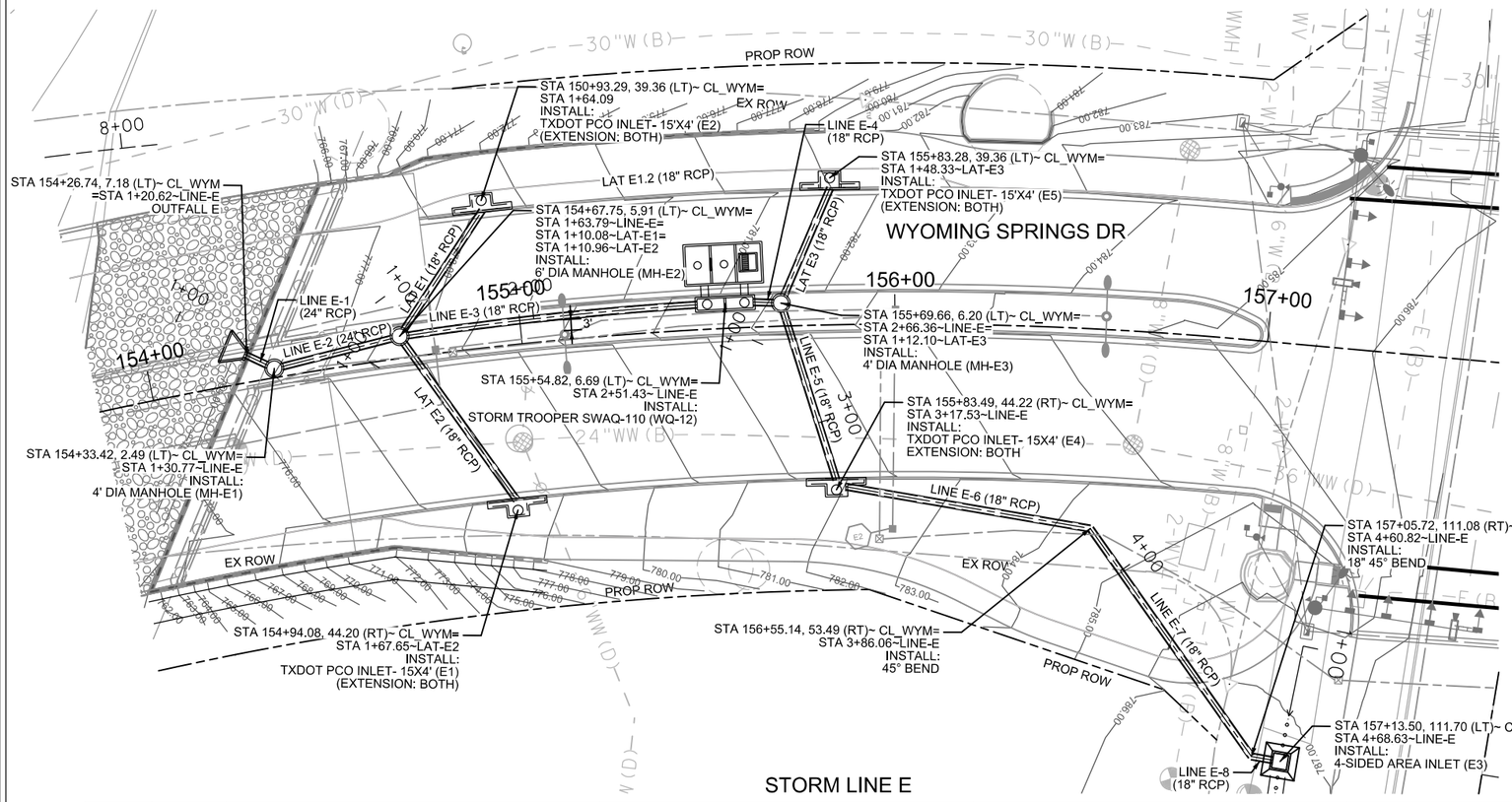

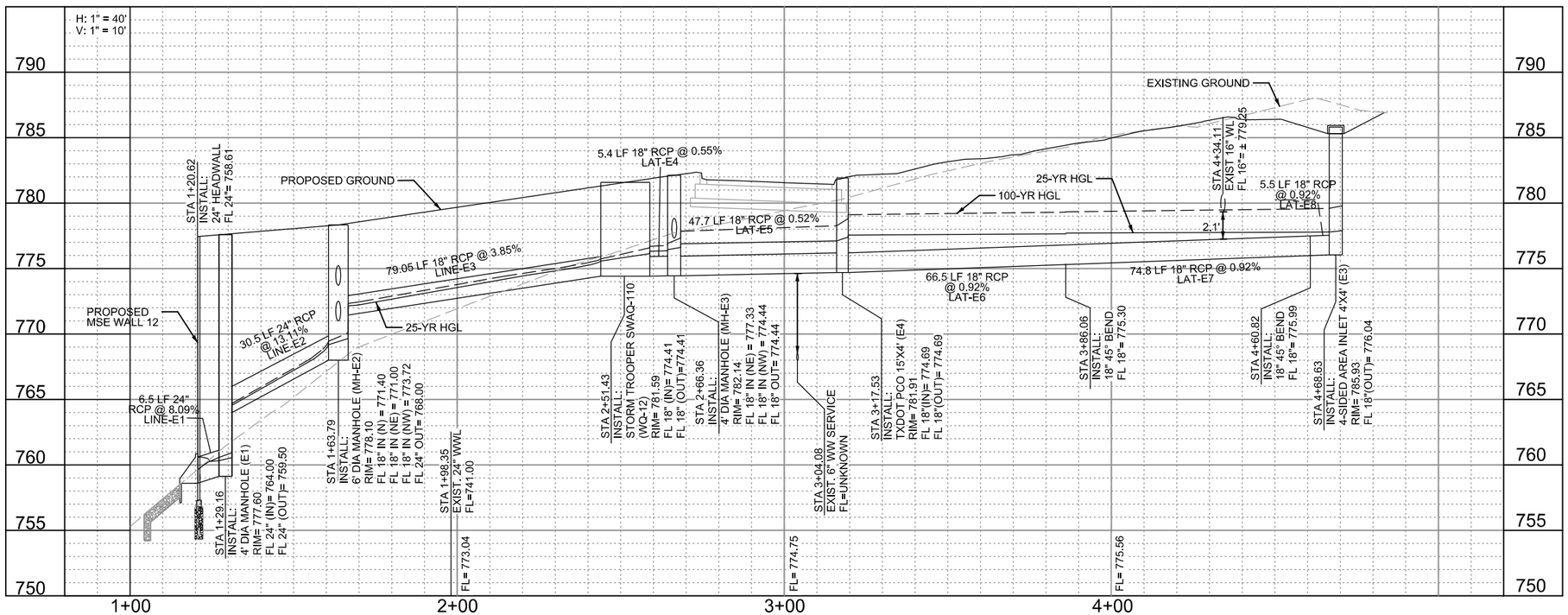



0 20 40 60 80

SCALE: 1"=40'

LEGEND

- 1+00 — ROADWAY CENTERLINE
- 760 — EXIST. CONTOURS
- PROP. DRAINAGE EASEMENT
- ROW
- 760 — PROPOSED CONTOURS
- PROPOSED DITCH CENTERLINE
- PROPOSED STORM SEWER/ CULVERT
- PROPOSED STORM HEADWALL
- PROPOSED CURB INLET
- STORM TROOPER
- PROPOSED AREA ZONE DRAIN
- PROPOSED MANHOLE

NOTES:

1. ALL BENDS,WYES, AND TRANSITIONS SHALL BE PRE-FABRICATED.
2. ALL MANHOLES SHALL UTILIZE CITY OF ROUND ROCK FRAME AND COVERS.
3. SEE HYDRAULIC CALCULATIONS SHEET, LINK CONFIGURATION AND LOCATION OF STATION/OFFSET PER STRUCTURE TYPE.
4. ALL NON-CITY INFRASTRUCTRE INCLUDING GAS, ELECTRIC, CABLE, AND TELECOMMUNICATIONS SHALL TRAVERSE UNDERNEATH CITY INFRASTUCTURE. THIS INCLUDES, BUT IS NOT LIMITED TO WATER LINES AND STORM SEWER, WITH A MINIMUM OUTSIDE-TO OUTSIDE CLEARANCE OF 18-INCHES.

WYOMING SPRINGS
SEGMENT 1
ROUND ROCK, TX

ROUND ROCK TEXAS

halff
13620 BRANTWICK DR
BLDG C, STE 100
AUSTIN, TX 78729
(512) 777-4600
TBPELS FIRM #312

Revision No.	Date	Description

F-312 6/14/23
STATE OF TEXAS
JEFFREY L NAGY
133255
LICENSED PROFESSIONAL ENGINEER

100% SUBMITTAL

Project No.:	36179.002
Issued:	6/24/2023
Drawn By:	SG
Checked By:	JN
Scale:	1"=40'

Sheet Title
WYOMING SPRINGS STORM DRAIN PLAN & PROFILE (8 OF 13)

174
Sheet Number

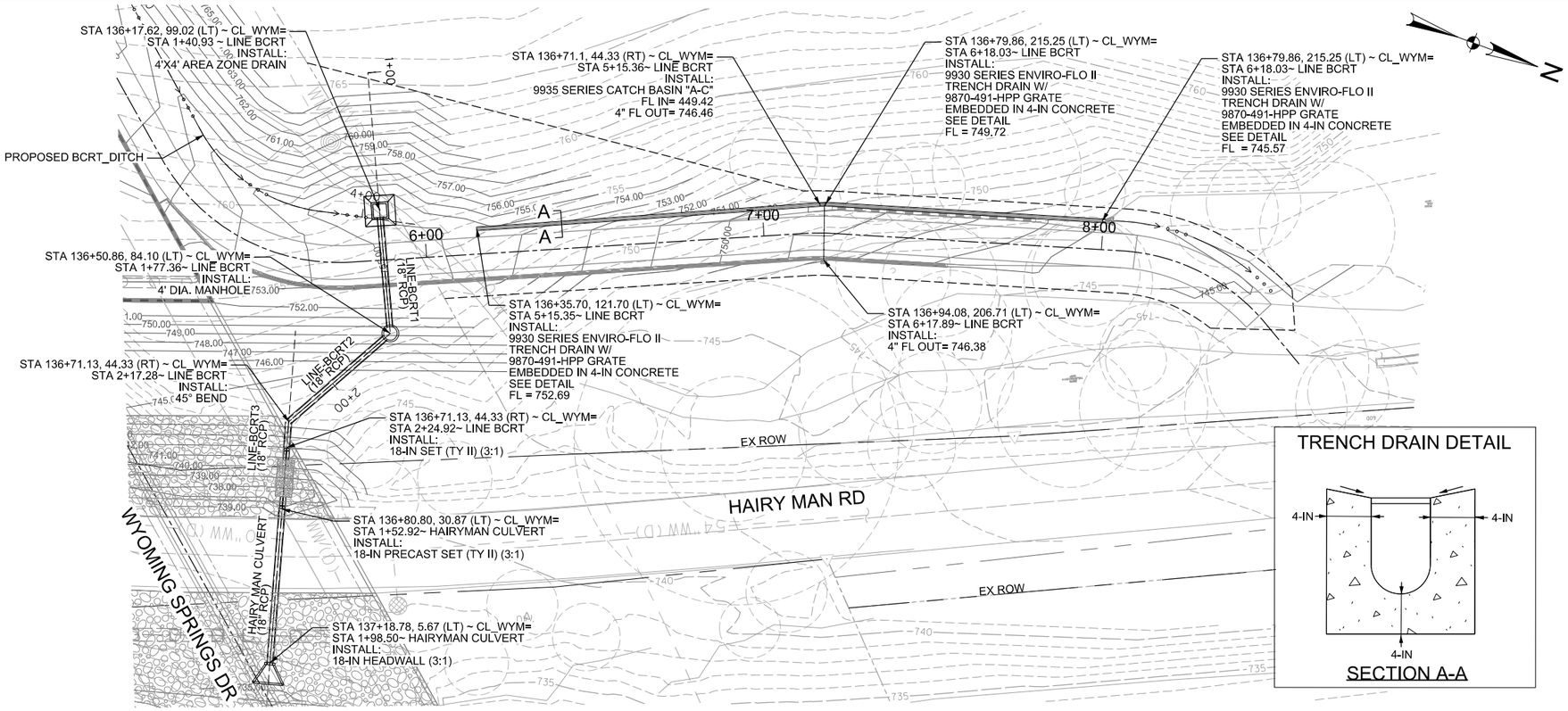

LEGEND

- 1+00 — ROADWAY CENTERLINE
- 760 — EXIST. CONTOURS
- PROP. DRAINAGE EASEMENT
- ROW
- 760 — PROPOSED CONTOURS
- PROPOSED DITCH CENTERLINE
- PROPOSED STORM SEWER/ CULVERT
- PROPOSED STORM HEADWALL
- PROPOSED CURB INLET
- STORM TROOPER
- PROPOSED AREA ZONE DRAIN
- PROPOSED MANHOLE

NOTES:

1. ALL BENDS,WYES, AND TRANSITIONS SHALL BE PRE-FABRICATED.
2. ALL MANHOLES SHALL UTILIZE CITY OF ROUND ROCK FRAME AND COVERS.
3. SEE HYDRAULIC CALCULATIONS SHEET, LINK CONFIGURATION AND LOCATION OF STATION/OFFSET PER STRUCTURE TYPE.
4. ALL NON-CITY INFRASTRUCTRE INCLUDING GAS, ELECTRIC, CABLE, AND TELECOMMUNICATIONS SHALL TRAVERSE UNDERNEATH CITY INFRASTUCTURE. THIS INCLUDES, BUT IS NOT LIMITED TO WATER LINES AND STORM SEWER, WITH A MINIMUM OUTSIDE-TO OUTSIDE CLEARANCE OF 18-INCHES.

STORM LINE BCRT

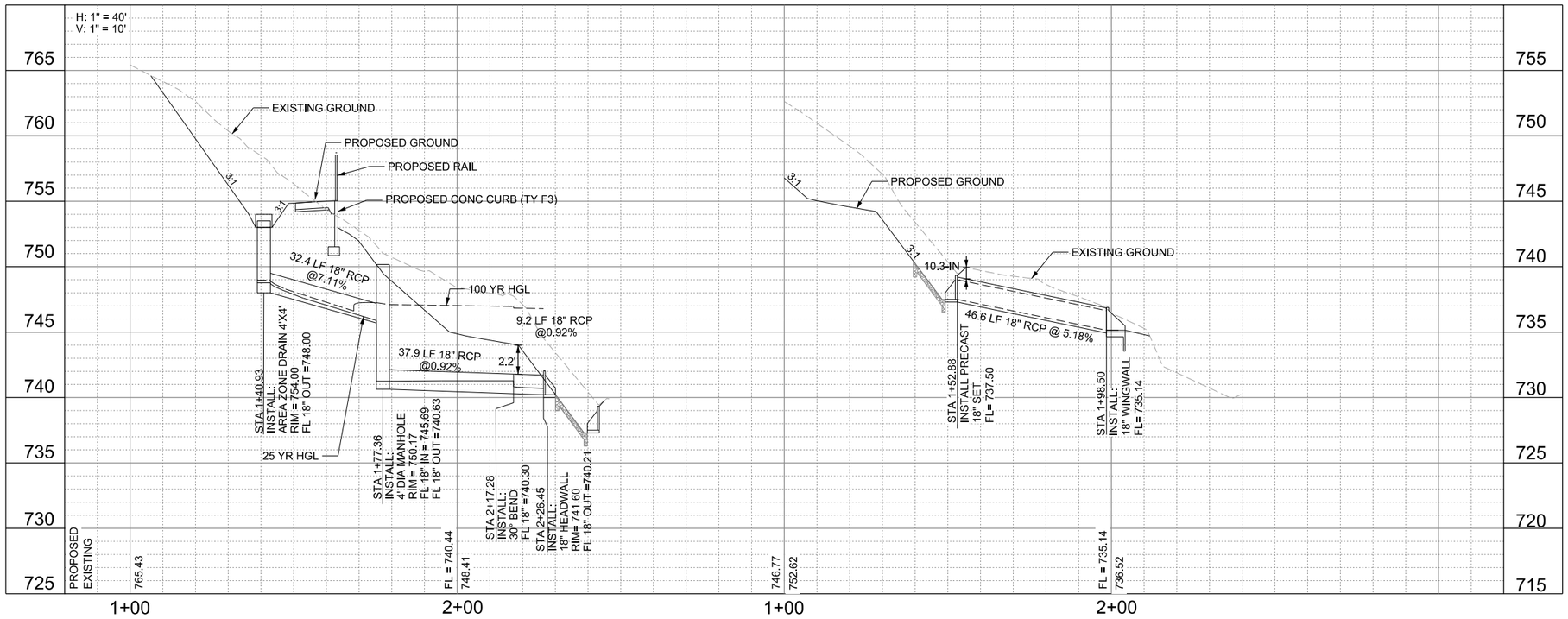

HAIRYMAN CULVERT

WYOMING SPRINGS
SEGMENT 1
ROUND ROCK, TX

ROUND ROCK TEXAS

halff
13620 BRANTWICK DR
BLDG C, STE 100
AUSTIN, TX 78729
(512) 777-4800
TBPELS FIRM #312

Revision No.	Date	Description

F-312 4/17/23
STATE OF TEXAS
JEFFREY L NAGY
133255
LICENSED
PROFESSIONAL ENGINEER

100% SUBMITTAL

Project No.:	36179.002
Issued:	4/17/2023
Drawn By:	SG
Checked By:	JN
Scale:	1"=40'

Sheet Title
WYOMING SPRINGS
STORM DRAIN PLAN & PROFILE (9 OF 13)

175
Sheet Number

LAT A1

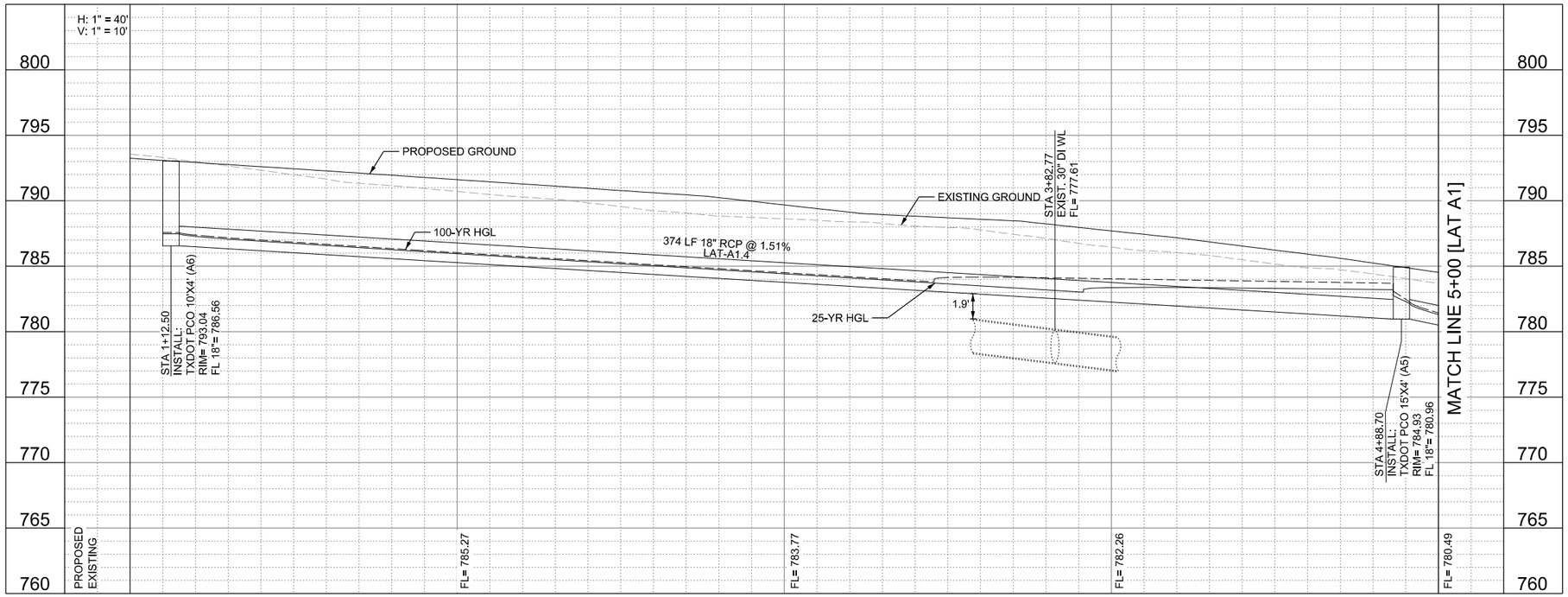

LAT A1

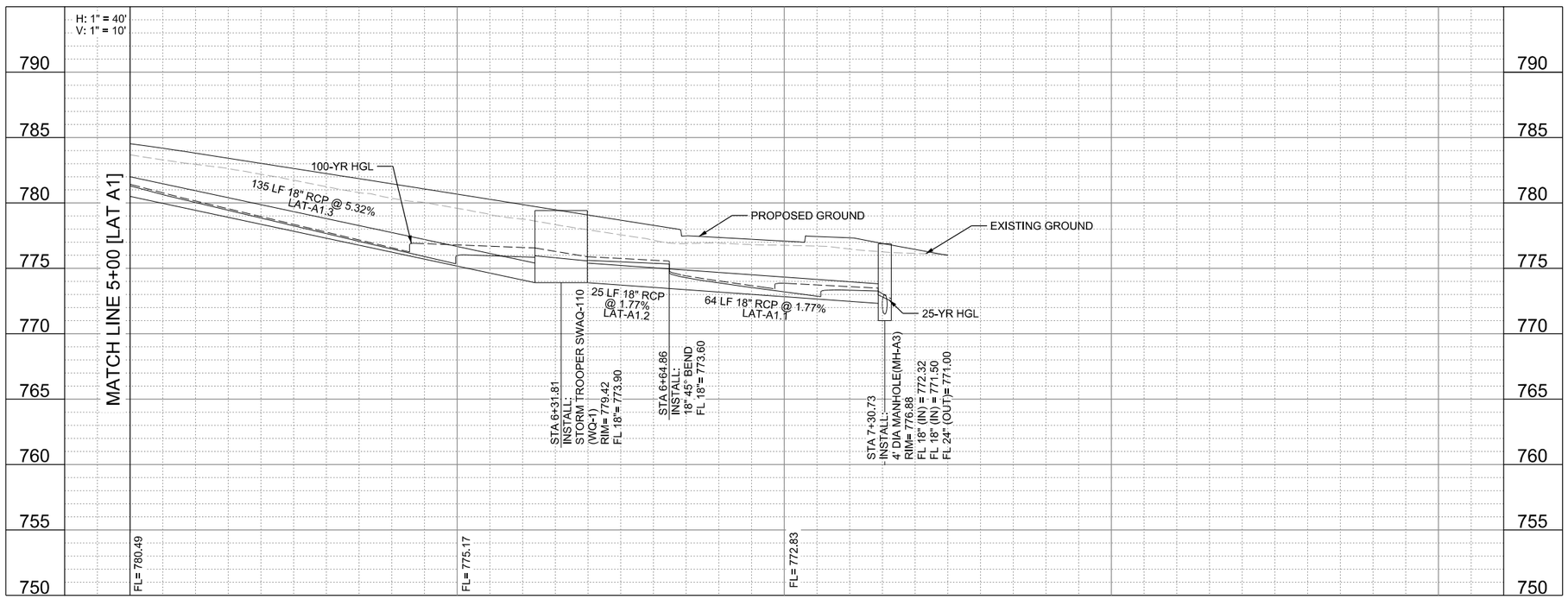

LEGEND

- EXIST. CONTOUR
- EXIST. ROW
- EXIST. PROPERTY LINE
- PROP ROW
- EASEMENT
- PROP STORM PIPE
- 1+00 ROAD CENTERLINE
- EXIST. FENCE
- PROP. CORRIDOR FENCE
- TRAFFIC FLOW
- DOUBLE MAST ILLUMINATION POLE
- TRAFFIC SIGNAL
- CONC MEDIAN
- PROP. DITCH LINE
- EXISTING DITCH LINE
- PROP SAWCUT
- P-4 BORE HOLE LOCATION
- TH-03 TEST HOLE LOCATION
- PROP. PAVEMENT WIDENING

NOTES:

1. CALLOUTS ARE MEASURED TO BACK OF CURB OR EDGE OF PAVEMENT UNLESS OTHERWISE NOTED.
2. ALL STA/OFFSET CALLOUTS ARE FROM WYM/TNR/SBR UNLESS OTHERWISE NOTED.
3. SEE WYOMING SPRINGS DITCH PLAN SHEETS FOR MORE INFORMATION ON DITCHES.
4. ALL EXISTING M/H & WATER VALVES SHALL BE RAISED TO FINAL GRADE PRIOR TO PAVING PER CORR ITEM NO. 506.

WYOMING SPRINGS
SEGMENT 1
ROUND ROCK, TX

ROUND ROCK TEXAS

halff
13620 BRANTWICK DR
BLDG C, STE 100
AUSTIN, TX 78729
(512) 777-4600
TBPELS FIRM #312

Revision No.	Date	Description

F-312 4/17/23
STATE OF TEXAS
JEFFREY L. NAGY
133255
LICENSED
PROFESSIONAL ENGINEER

100% SUBMITTAL

Project No.:	36179.002
Issued:	4/17/2023
Drawn By:	SG
Checked By:	JN
Scale:	1"=40'

Sheet Title
WYOMING SPRINGS STORM DRAIN PLAN & PROFILE (10 OF 13)

176
Sheet Number

LAT A2

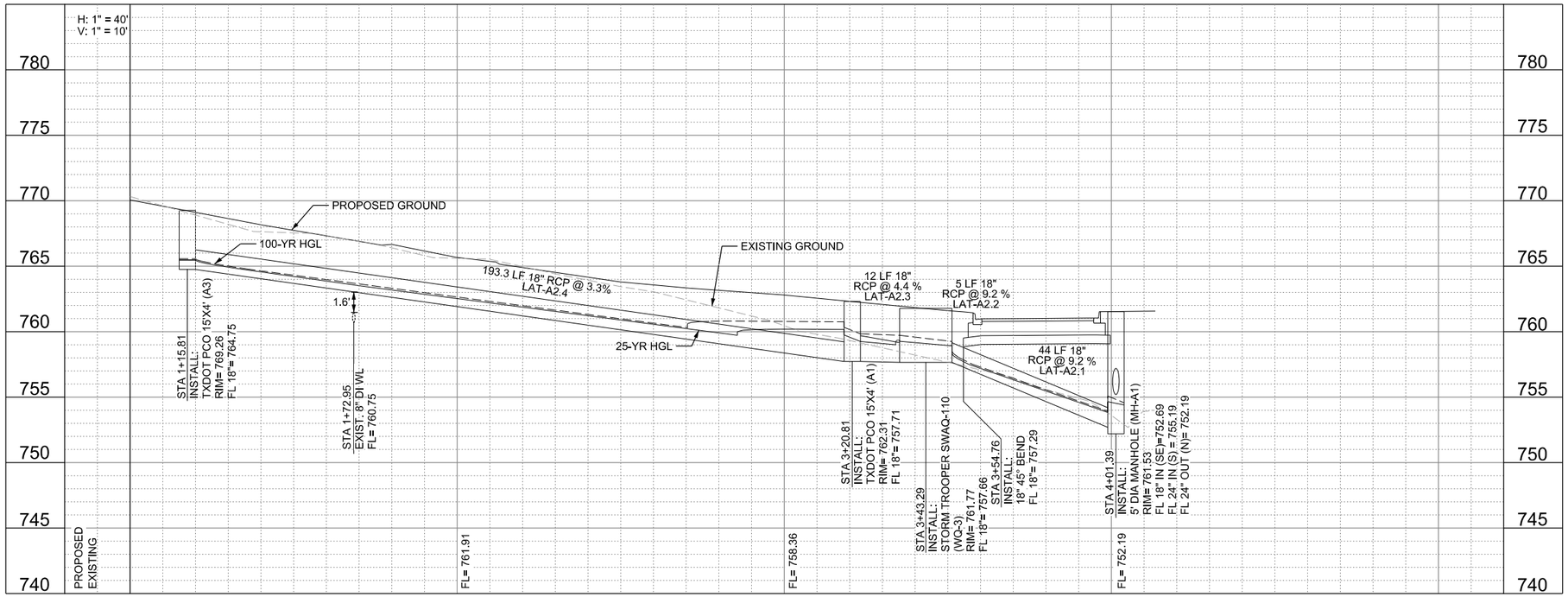

LAT A3

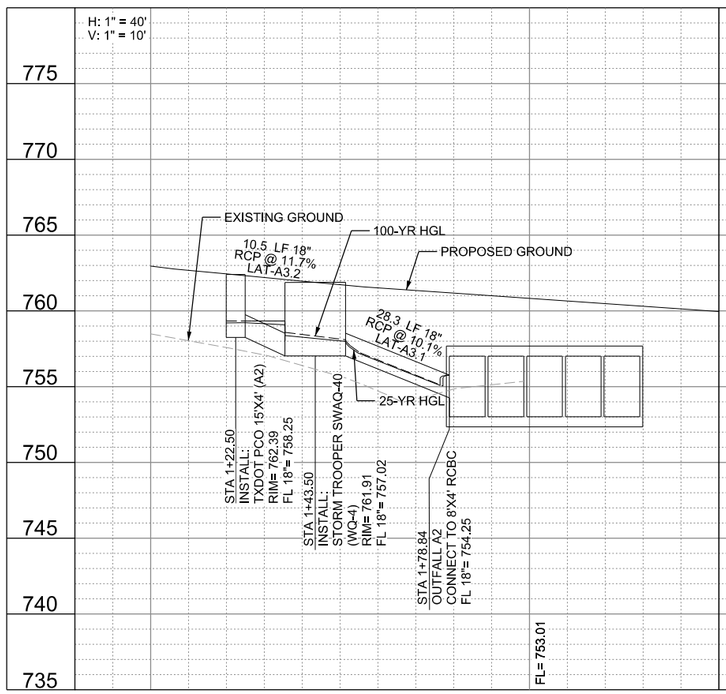

LAT B1

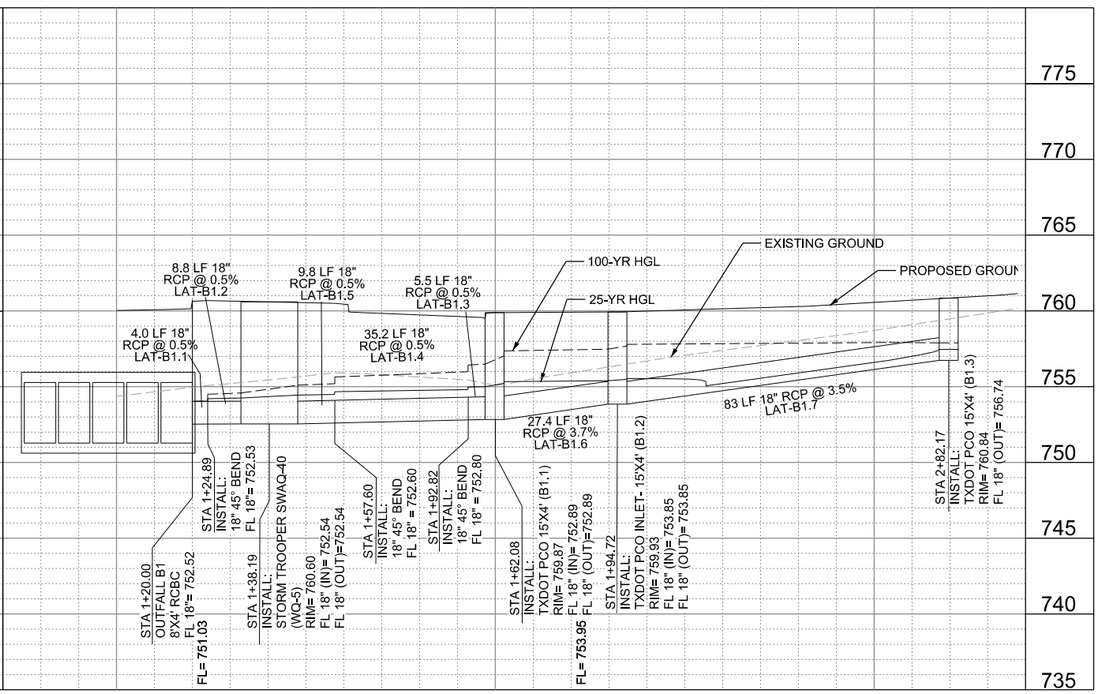

LEGEND

- EXIST. CONTOUR
- EXIST. ROW
- EXIST. PROPERTY LINE
- PROP ROW
- EASEMENT
- PROP STORM PIPE
- 1+00 ROAD CENTERLINE
- EXIST. FENCE
- PROP. CORRIDOR FENCE
- TRAFFIC FLOW
- DOUBLE MAST ILLUMINATION POLE
- TRAFFIC SIGNAL
- CONC MEDIAN
- PROP. DITCH LINE
- EXISTING DITCH LINE
- PROP SAWCUT
- P-4 BORE HOLE LOCATION
- TH-103 TEST HOLE LOCATION
- PROP. PAVEMENT WIDENING

NOTES:

1. CALLOUTS ARE MEASURED TO BACK OF CURB OR EDGE OF PAVEMENT UNLESS OTHERWISE NOTED.
2. ALL STA/OFFSET CALLOUTS ARE FROM WYM/TNR/SBR UNLESS OTHERWISE NOTED.
3. SEE WYOMING SPRINGS DITCH PLAN SHEETS FOR MORE INFORMATION ON DITCHES.
4. ALL EXISTING M/H & WATER VALVES SHALL BE RAISED TO FINAL GRADE PRIOR TO PAVING PER CORR ITEM NO. 506.

WYOMING SPRINGS
SEGMENT 1
ROUND ROCK, TX

ROUND ROCK TEXAS

halff
13620 BRAKWICK DR
BLDG C, STE 100
AUSTIN, TX 78729
(512) 777-4800
TBPELS FIRM #312

Revision No.	Date	Description

F-312 4/17/23
STATE OF TEXAS
JEFFREY L NAGY
133255
LICENSED
PROFESSIONAL ENGINEER

100% SUBMITTAL

Project No.:	36179.002
Issued:	4/17/2023
Drawn By:	SG
Checked By:	JN
Scale:	1"=40'

Sheet Title
WYOMING SPRINGS STORM DRAIN PLAN & PROFILE (11 OF 13)

177
Sheet Number

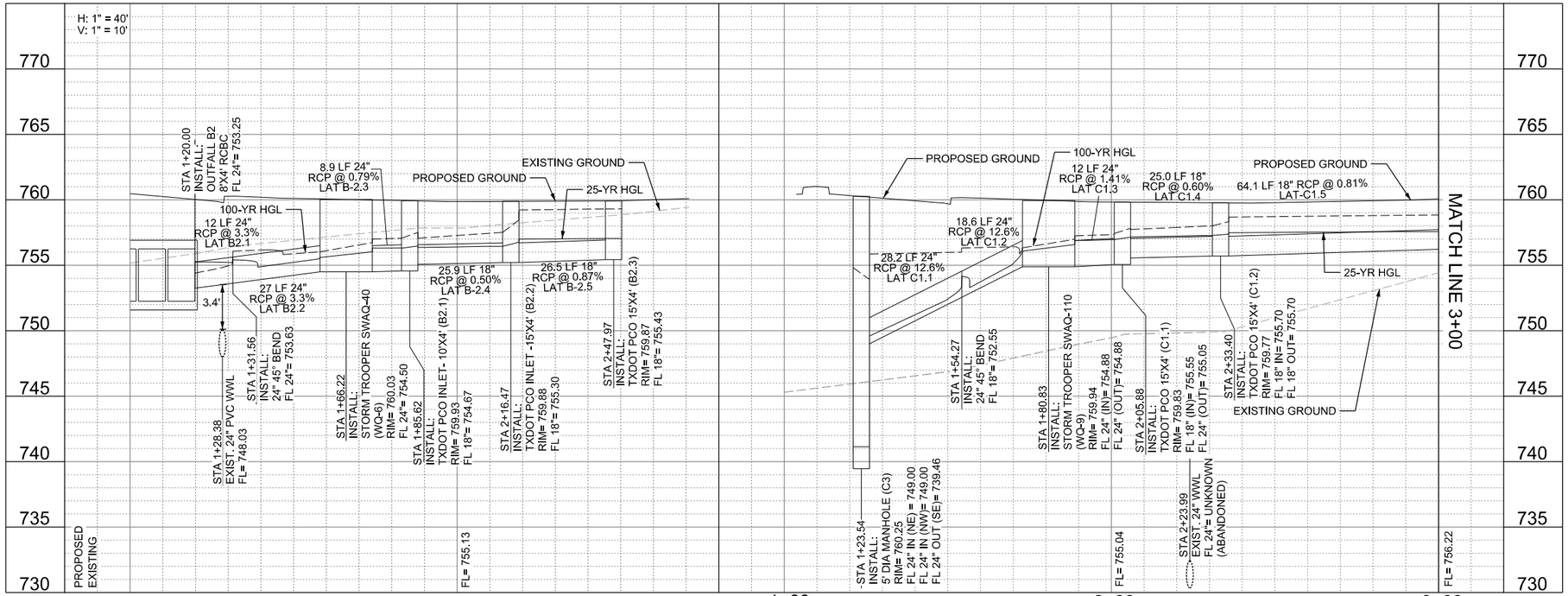

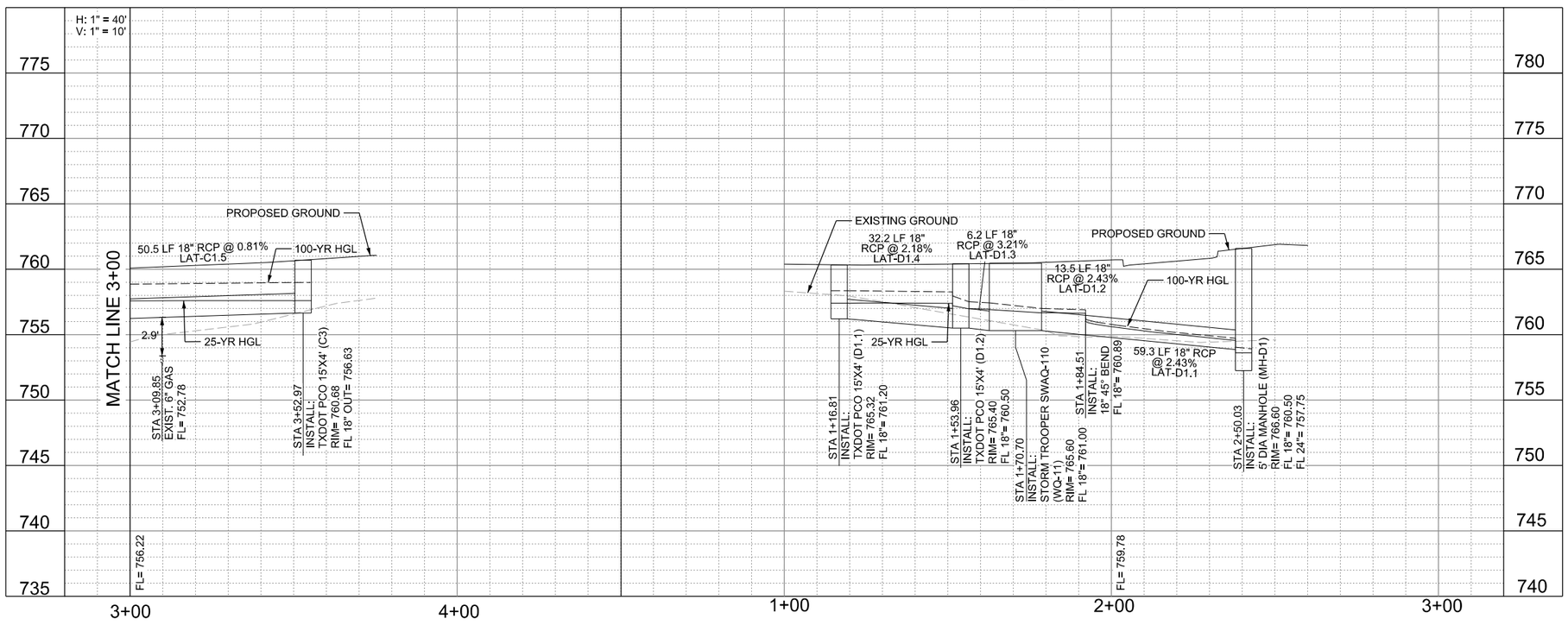

NOTES:

1. CALLOUTS ARE MEASURED TO BACK OF CURB OR EDGE OF PAVEMENT UNLESS OTHERWISE NOTED.
2. ALL STA/OFFSET CALLOUTS ARE FROM WYM/TNR/SBR UNLESS OTHERWISE NOTED.
3. SEE WYOMING SPRINGS DITCH PLAN SHEETS FOR MORE INFORMATION ON DITCHES.
4. ALL EXISTING M/H & WATER VALVES SHALL BE RAISED TO FINAL GRADE PRIOR TO PAVING PER CORR ITEM NO. 506.

WYOMING SPRINGS
SEGMENT 1
ROUND ROCK, TX

ROUND ROCK TEXAS

halff
13620 BRANTWICK DR
BLDG C, STE 100
AUSTIN, TX 78729
(512) 777-4600
TBPELS FIRM #312

Revision No.	Date	Description

F-312 4/17/23
STATE OF TEXAS
JEFFREY L NAGY
133255
LICENSED
PROFESSIONAL ENGINEER

100% SUBMITTAL

Project No.:	36179.002
Issued:	4/17/2023
Drawn By:	SG
Checked By:	JN
Scale:	1"=40'

Sheet Title
WYOMING SPRINGS
STORM DRAIN PLAN & PROFILE (12 OF 13)

178
Sheet Number

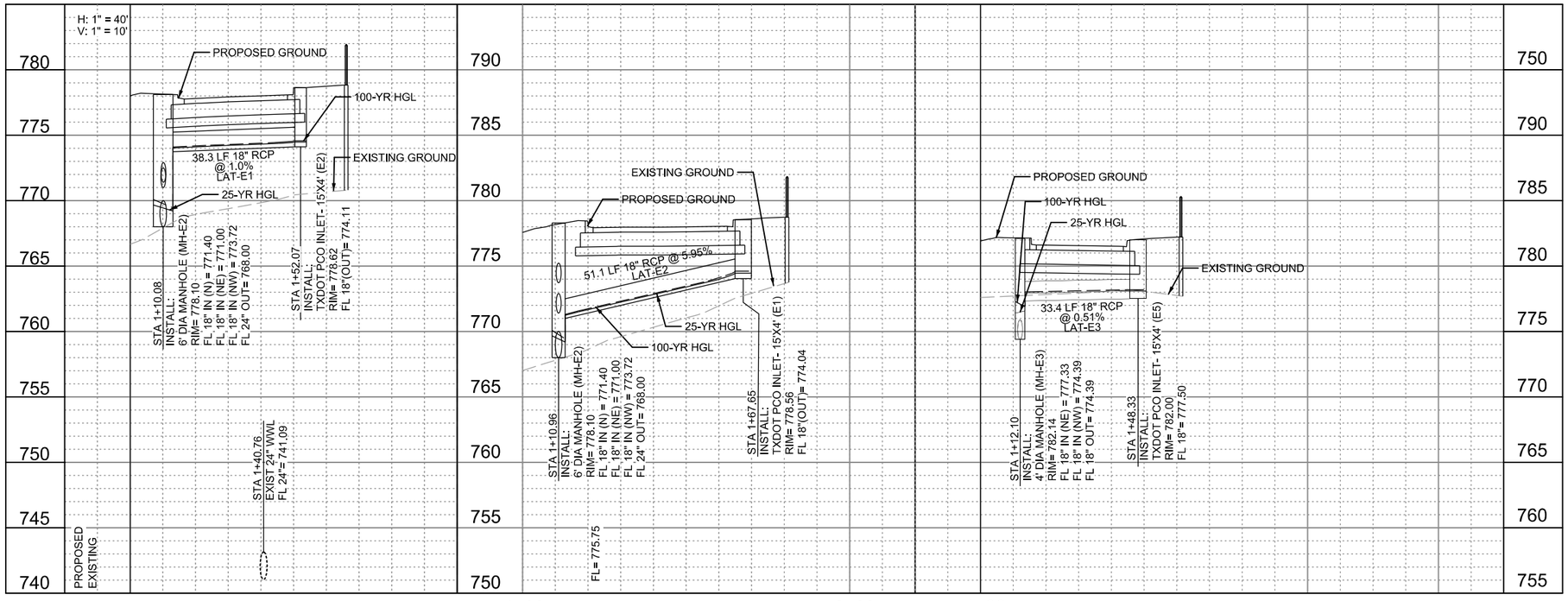

0 20 40 60 80

SCALE: 1"=40'

LEGEND

- EXIST. CONTOUR
- EXIST. ROW
- EXIST. PROPERTY LINE
- PROP ROW
- EASEMENT
- PROP STORM PIPE
- 1+00 ROAD CENTERLINE
- EXIST. FENCE
- PROP. CORRIDOR FENCE
- TRAFFIC FLOW
- DOUBLE MAST ILLUMINATION POLE
- TRAFFIC SIGNAL
- CONC MEDIAN
- PROP. DITCH LINE
- EXISTING DITCH LINE
- PROP SAWCUT
- P-4 BORE HOLE LOCATION
- TH-105 TEST HOLE LOCATION
- PROP. PAVEMENT WIDENING

NOTES:

1. CALLOUTS ARE MEASURED TO BACK OF CURB OR EDGE OF PAVEMENT UNLESS OTHERWISE NOTED.
2. ALL STA/OFFSET CALLOUTS ARE FROM WYM/TNR/SBR UNLESS OTHERWISE NOTED.
3. SEE WYOMING SPRINGS DITCH PLAN SHEETS FOR MORE INFORMATION ON DITCHES.
4. ALL EXISTING M/H & WATER VALVES SHALL BE RAISED TO FINAL GRADE PRIOR TO PAVING PER CORR ITEM NO. 506.

WYOMING SPRINGS
SEGMENT 1
ROUND ROCK, TX

ROUND ROCK TEXAS

halff
13620 BRANTWICK DR
BLDG C, STE 100
AUSTIN, TX 78729
(512) 777-4600
TBPELS FIRM #312

Revision No.	Date	Description

F-312 8/14/23
STATE OF TEXAS
JEFFREY L NAGY
133255
LICENSED PROFESSIONAL ENGINEER

100% SUBMITTAL

Project No.:	36179.002
Issued:	6/24/2023
Drawn By:	SG
Checked By:	JN
Scale:	1"=40'

Sheet Title
WYOMING SPRINGS STORM DRAIN PLAN & PROFILE (13 OF 13)

179
Sheet Number

Beginning profile PR_BCRT_DITCH description:
==========

		STATION	ELEV	GRADE
VPI	1	1+16.31	772.0700	
VPI	2	1+76.65	765.6500	-10.6397
VPI	3	3+52.29	756.9000	-4.9818
VPI	4	3+99.60	754.1266	-5.8623
VPI	5	4+02.98	753.0000	-33.3300
VPI	6	4+07.98	753.0075	0.1506
VPI	7	4+11.00	753.9900	32.5321

==========
Ending profile PR_BCRT_DITCH description

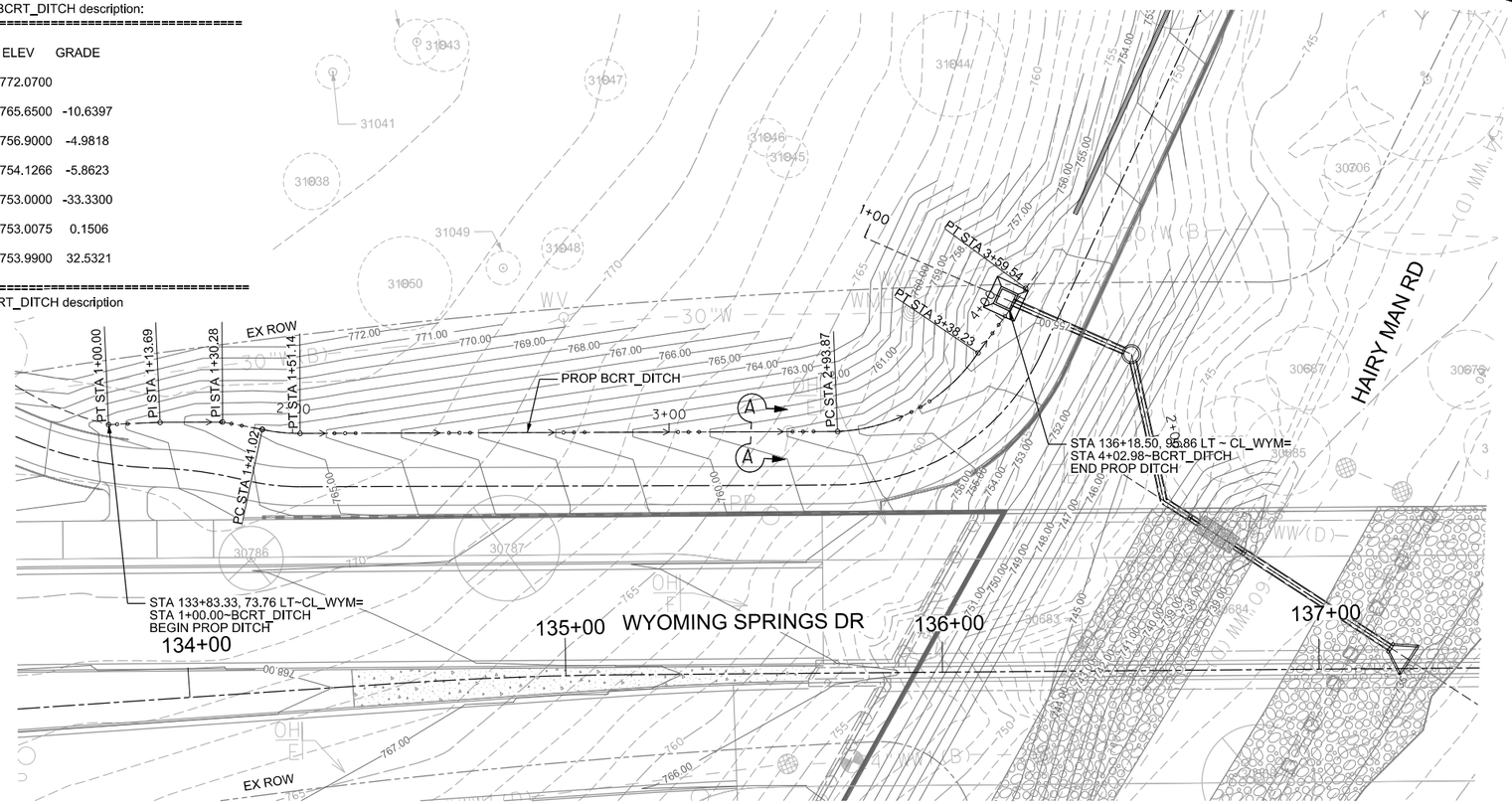



LEGEND

- ROADWAY CENTERLINE
- EXIST. CONTOURS
- PROP. DRAINAGE EASEMENT
- ROW
- PROPOSED CONTOURS
- PROPOSED DITCH CENTERLINE
- PROPOSED STORM SEWER/ CULVERT
- PROPOSED STORM HEADWALL
- PROPOSED CURB INLET
- STORM TROOPER
- PROPOSED AREA ZONE DRAIN
- PROPOSED MANHOLE

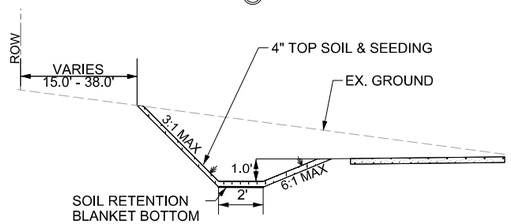

DITCH SECTION A-A

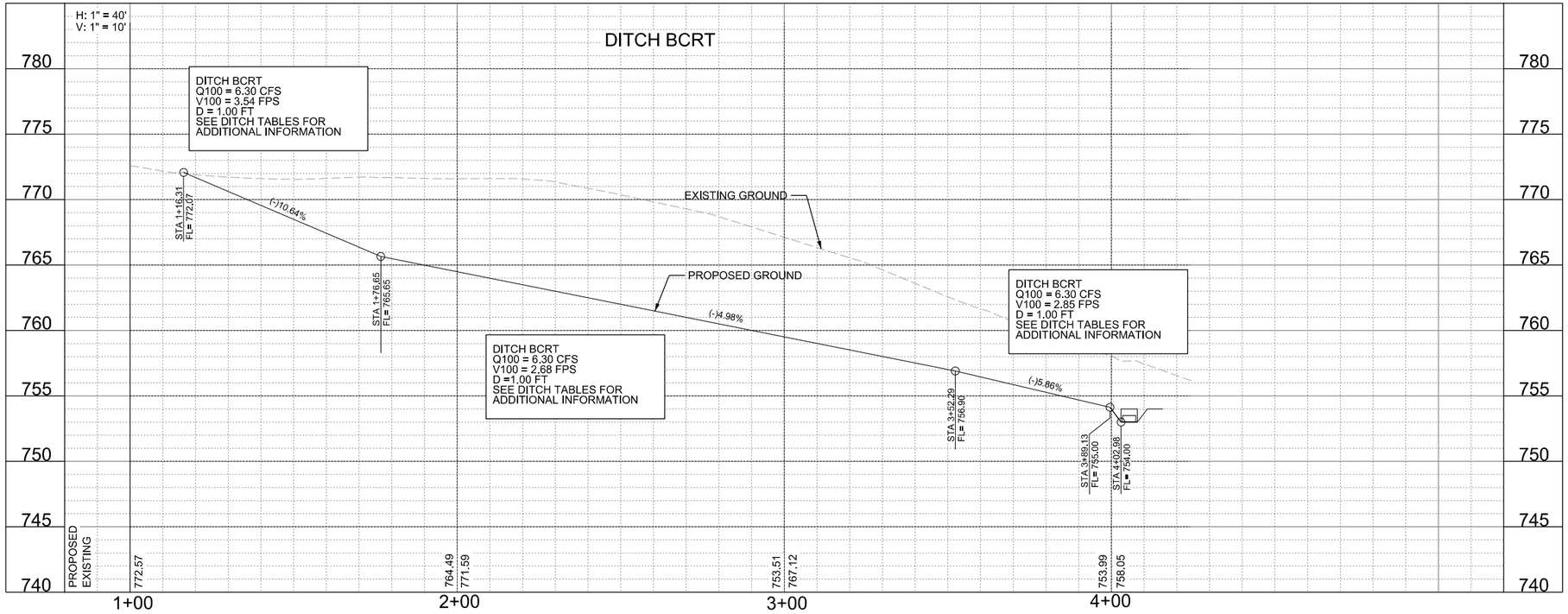

WYOMING SPRINGS
SEGMENT 1
ROUND ROCK, TX

ROUND ROCK TEXAS

halff
13620 BRAKTWICK DR
BLDG C, STE 100
AUSTIN, TX 78729
(512) 777-4800
TBPELS FIRM #312

Revision No.	Date	Description

F-312 4/5/23
STATE OF TEXAS
JEFFREY L. NAGY
133255
LICENSED
PROFESSIONAL ENGINEER

100% SUBMITTAL

Project No.:	36179.002
Issued:	4/17/2023
Drawn By:	SG
Checked By:	JN
Scale:	

Sheet Title
BCRT DRAINAGE DITCH PLAN AND PROFILE

180
Sheet Number

Beginning profile OSD1-DITCH description:

	STATION	ELEV	GRADE	TOTAL L	BACK L	AHEAD L
VPI 1	1+00.00	772.7450				
VPI 2	1+03.50	771.5900	-33.0000			
VPI 3	3+00.00	769.9820	-0.8183			
VPI 4	4+55.00	765.5000	-2.8916			
VPI 5	6+56.00	753.8400	-5.8010			
VPI 6	6+72.84	753.7390	-0.6000			

Ending profile OSD1-DITCH description

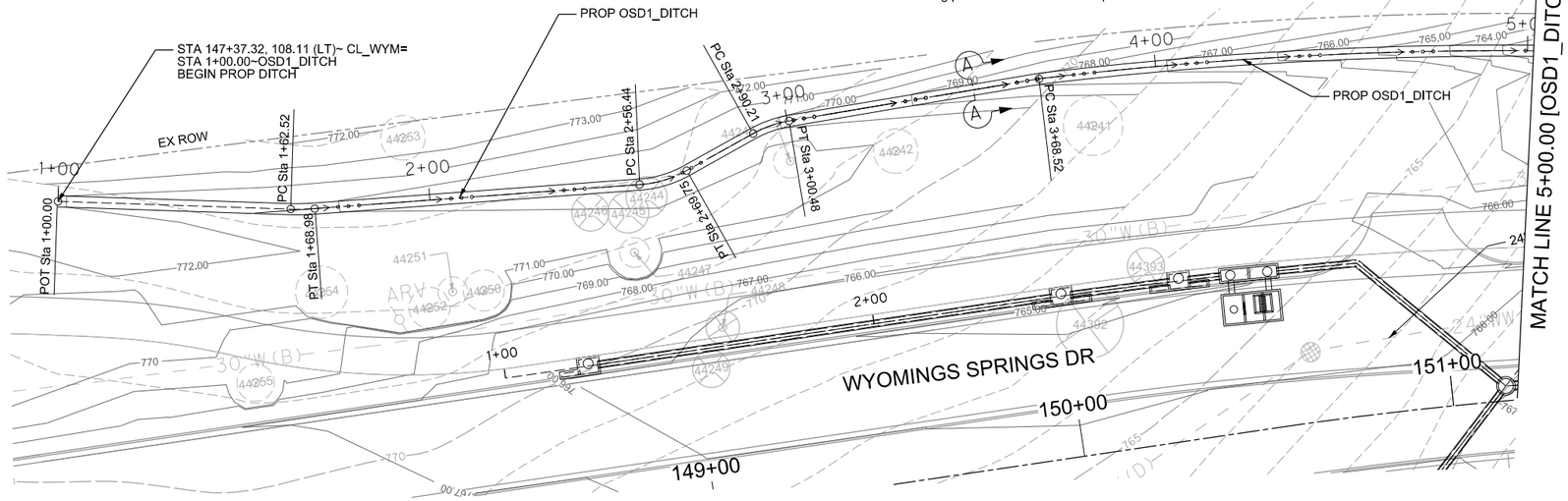

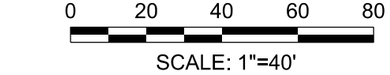

LEGEND

- 1+00 — ROADWAY CENTERLINE
- 760 — EXIST. CONTOURS
- PROP. DRAINAGE EASEMENT
- ROW
- 760 — PROPOSED CONTOURS
- PROPOSED DITCH CENTERLINE
- PROPOSED STORM SEWER/ CULVERT
- PROPOSED STORM HEADWALL
- PROPOSED CURB INLET
- STORM TROOPER
- PROPOSED AREA ZONE DRAIN
- PROPOSED MANHOLE

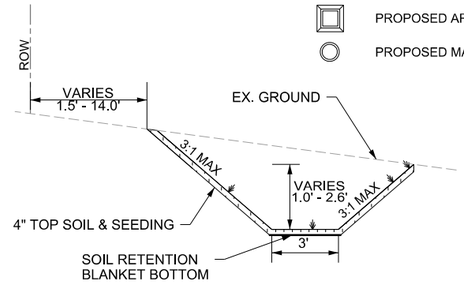

DITCH SECTION A-A
N.T.S.

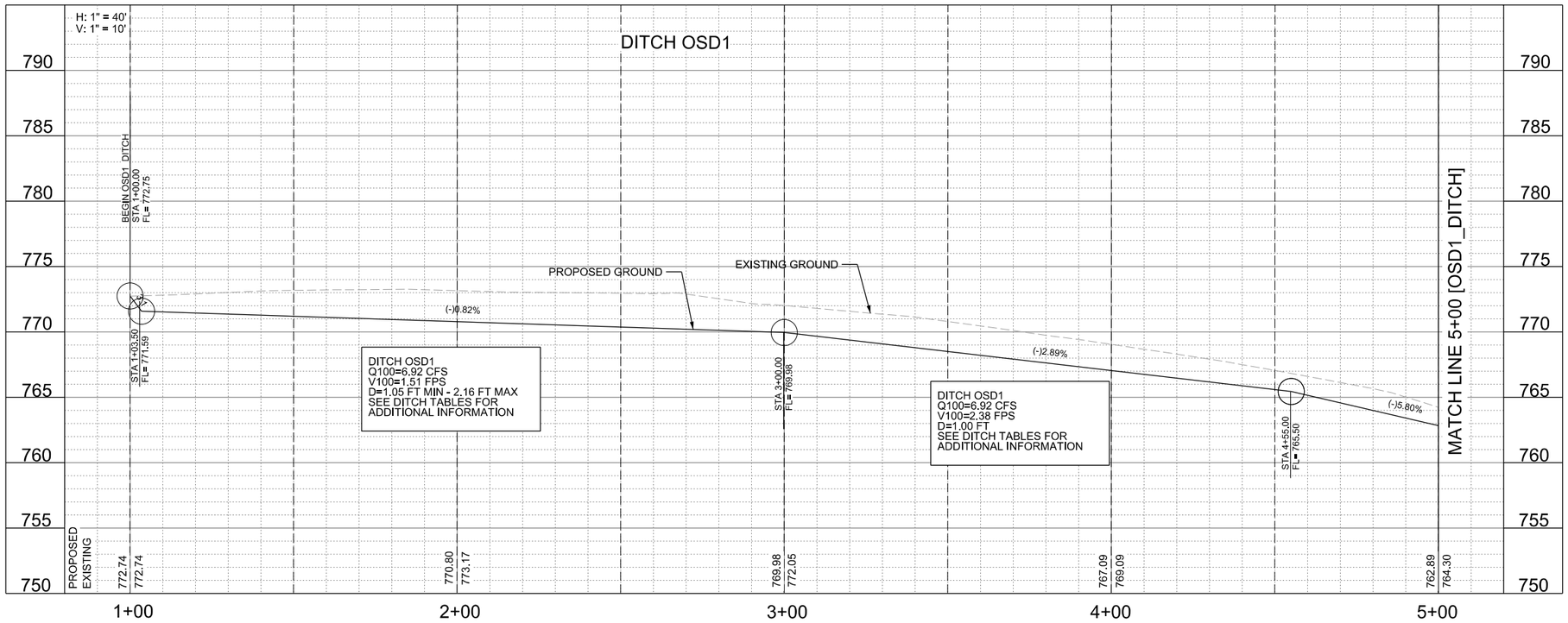

WYOMING SPRINGS
SEGMENT 1
ROUND ROCK, TX

ROUND ROCK TEXAS

halff
13620 BRANTWICK DR
BLDG C, STE 100
AUSTIN, TX 78729
(512) 777-4800
TBPELS FIRM #312

Revision No.	Date	Description

F-312 4/5/23
STATE OF TEXAS
JEFFREY L NAGY
133255
LICENSED
PROFESSIONAL ENGINEER

100% SUBMITTAL

Project No.:	36179.002
Issued:	4/17/2023
Drawn By:	SG
Checked By:	JN
Scale:	1"=40'

Sheet Title
WYOMING SPRINGS
DRAINAGE DITCH
PLAN AND PROFILE

181
Sheet Number

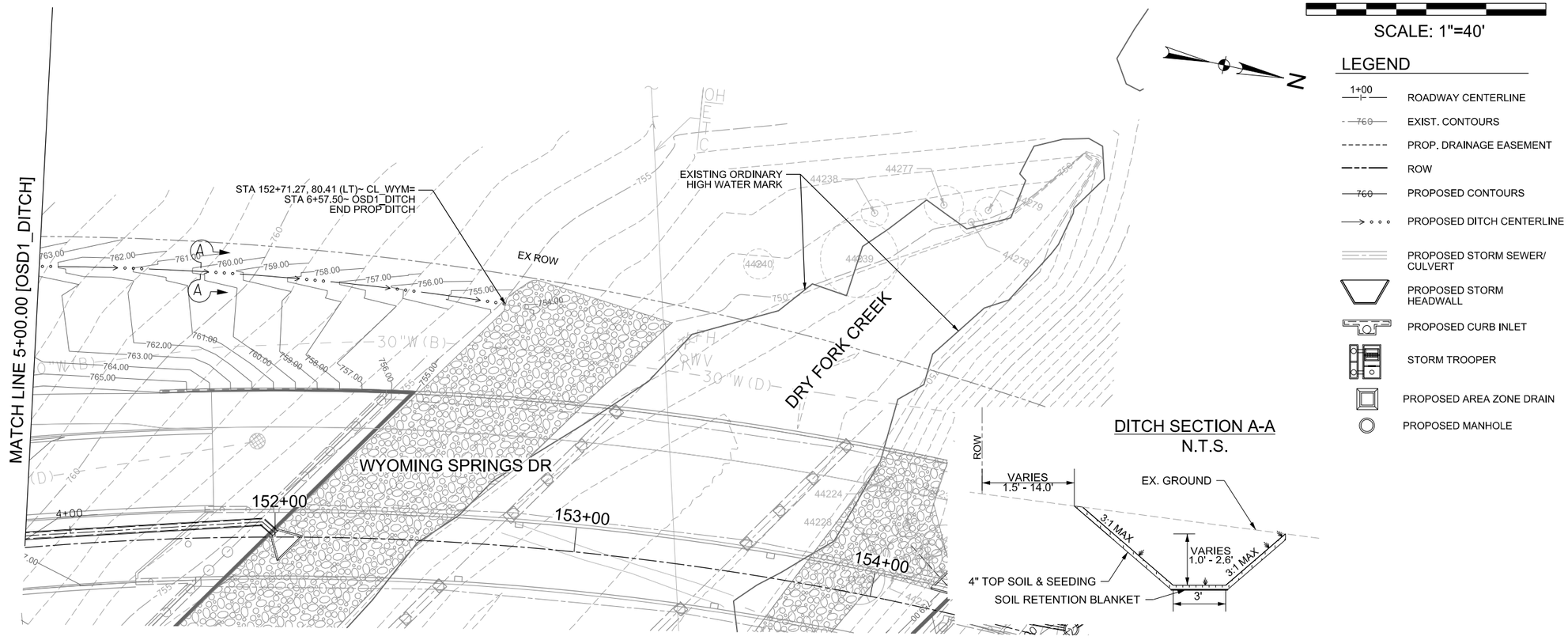

0 20 40 60 80

SCALE: 1"=40'

N

LEGEND

- 1+00 — ROADWAY CENTERLINE
- 760 — EXIST. CONTOURS
- PROP. DRAINAGE EASEMENT
- ROW
- 760 — PROPOSED CONTOURS
- PROPOSED DITCH CENTERLINE
- PROPOSED STORM SEWER/ CULVERT
- PROPOSED STORM HEADWALL
- PROPOSED CURB INLET
- STORM TROOPER
- PROPOSED AREA ZONE DRAIN
- PROPOSED MANHOLE

DITCH SECTION A-A
N.T.S.

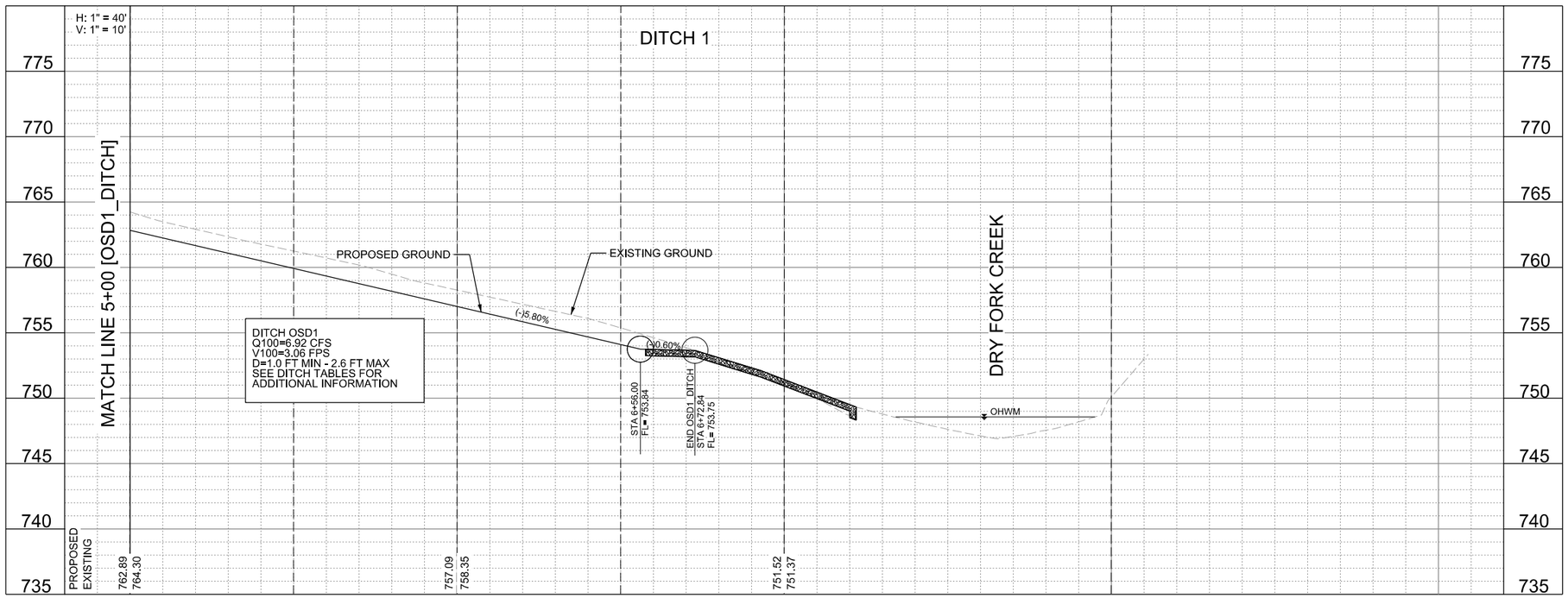

WYOMING SPRINGS
SEGMENT 1
ROUND ROCK, TX

ROUND ROCK TEXAS

halff
13620 BRANTWICK DR
BLDG C, STE 100
AUSTIN, TX 78729
(512) 777-4600
TBPELS FIRM #312

Revision No.	Date	Description

F-312 4/5/23

STATE OF TEXAS
JEFFREY L. NAGY
133255
LICENSED
PROFESSIONAL ENGINEER

100% SUBMITTAL

Project No.:	36179.002
Issued:	4/28/2023
Drawn By:	SG
Checked By:	JN
Scale:	1"=40'

Sheet Title
WYOMING SPRINGS
DRAINAGE DITCH
PLAN AND PROFILE

182
Sheet Number

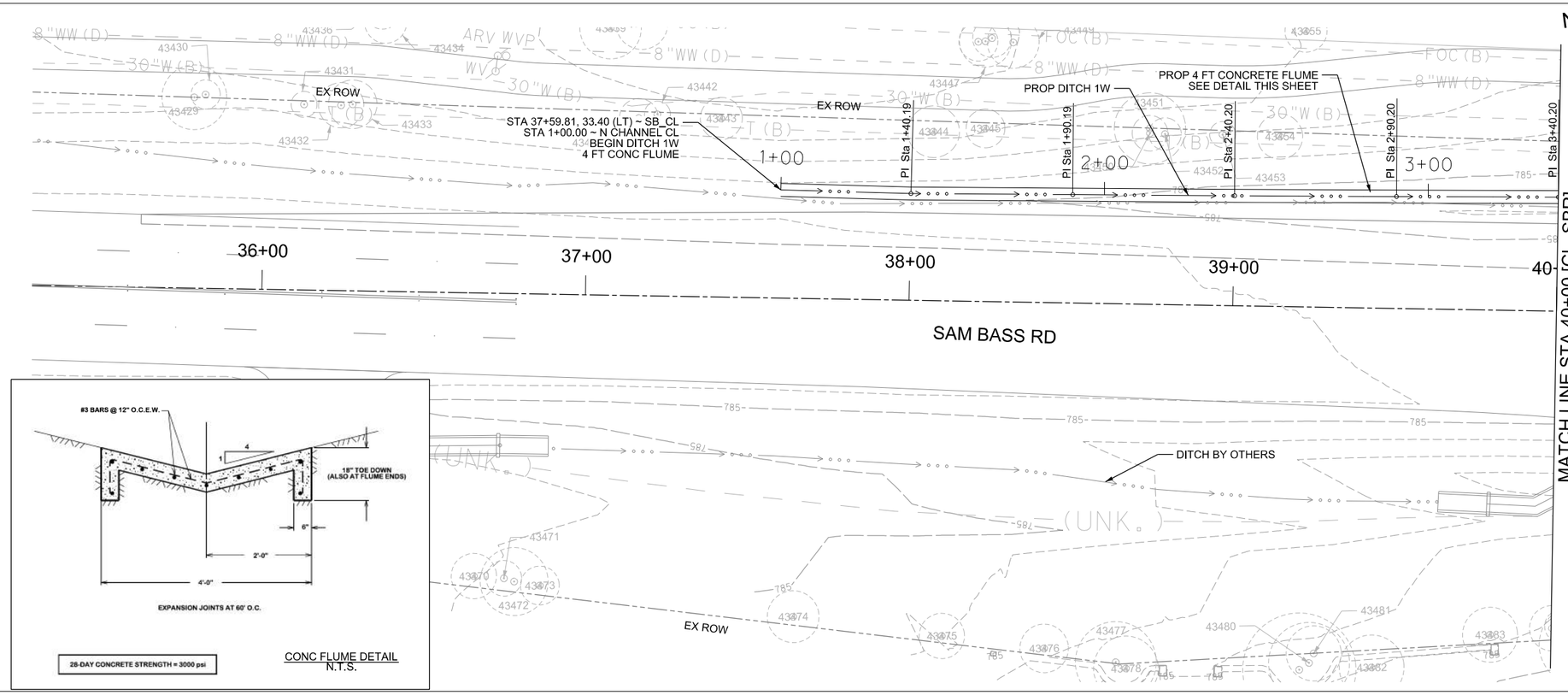

CONC FLUME DETAIL
N.T.S.

LEGEND

- 1+00 — ROADWAY CENTERLINE
- 760 — EXIST. CONTOURS
- PROP. DRAINAGE EASEMENT
- ROW
- 760 — PROPOSED CONTOURS
- PROPOSED DITCH CENTERLINE
- PROPOSED STORM SEWER/ CULVERT
- PROPOSED STORM HEADWALL
- PROPOSED CURB INLET
- STORM TROOPER
- PROPOSED AREA ZONE DRAIN
- PROPOSED MANHOLE

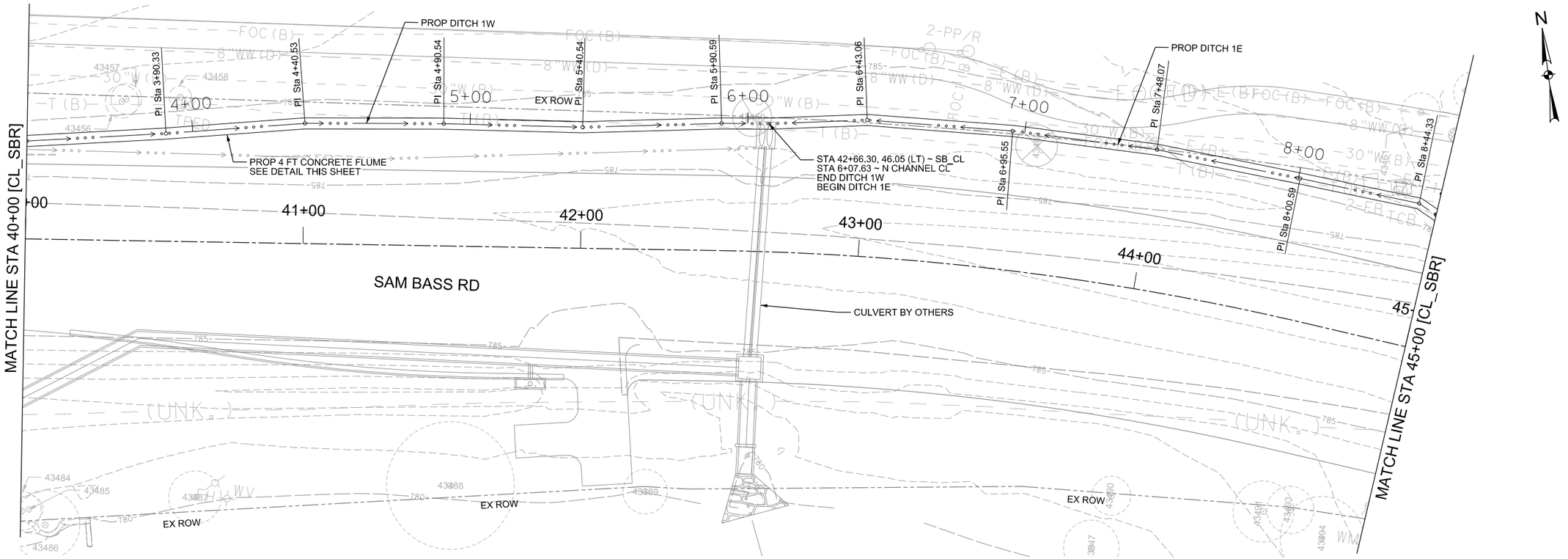

WYOMING SPRINGS
SEGMENT 1
ROUND ROCK, TX

ROUND ROCK TEXAS

halff
13620 BRANTWICK DR
BLDG C, STE 100
AUSTIN, TX 78729
(512) 777-4600
TBPELS FIRM #312

Revision		
No.	Date	Description

STATE OF TEXAS
ANDREW M. L. DUTTON
117255
LICENSED
PROFESSIONAL ENGINEER
4-14-23

100% SUBMITTAL

Project No.:	36179.002
Issued:	4/14/2023
Drawn By:	BH
Checked By:	AD
Scale:	1"=40'

Sheet Title
SAM BASS
DRAINAGE DITCH
PLAN

183
Sheet Number

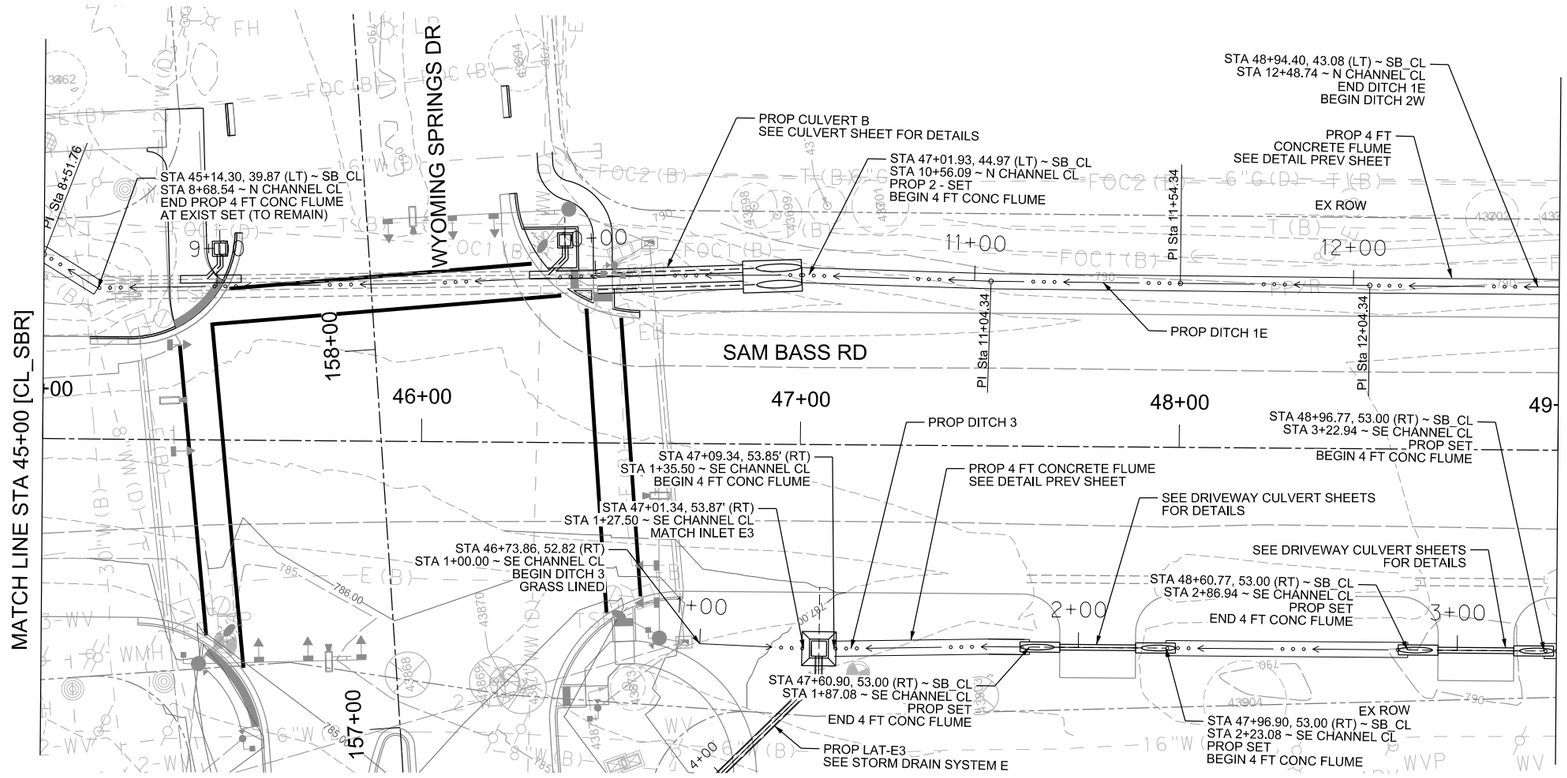

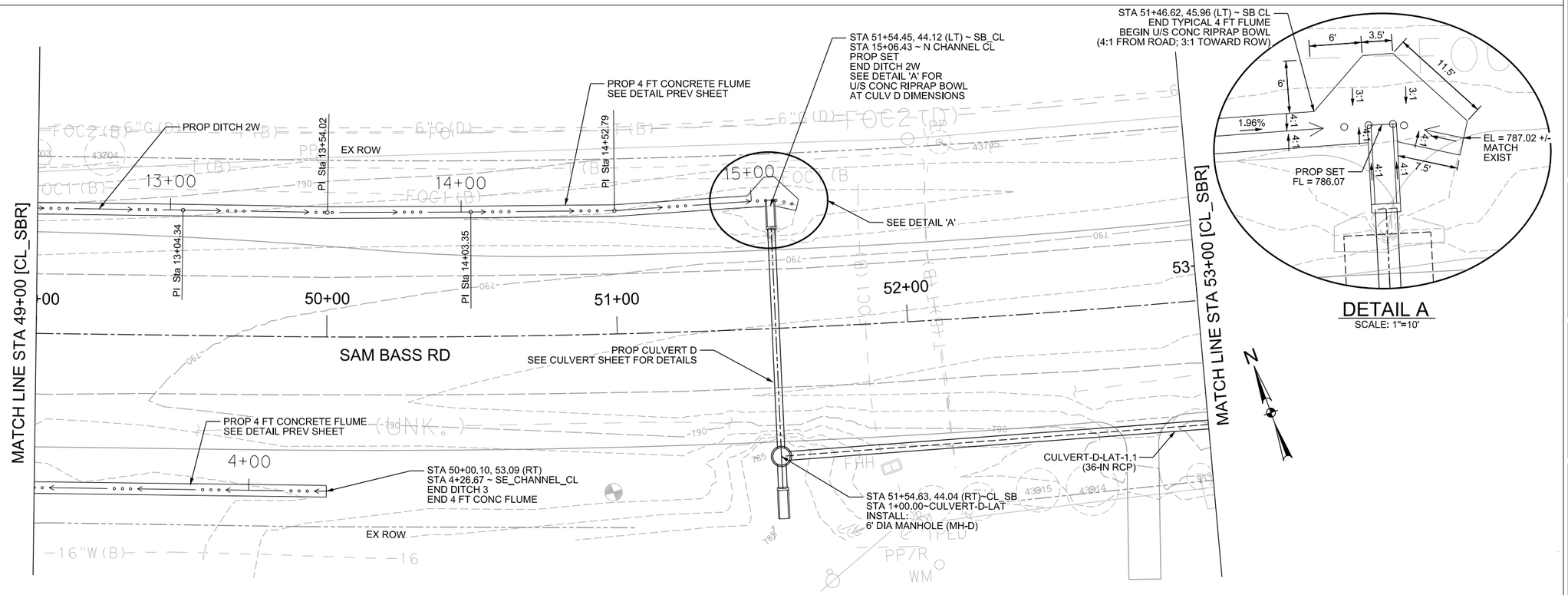

WYOMING SPRINGS
SEGMENT 1
ROUND ROCK, TX

ROUND ROCK TEXAS

halff
13620 BRANTWICK DR
BLDG C, STE 100
AUSTIN, TX 78729
(512) 777-4800
TBPELS FIRM #312

Revision No.	Date	Description

F312 4-14-23
STATE OF TEXAS
ANDREW M. L. DUTTON
117255
LICENSED
PROFESSIONAL ENGINEER

100% SUBMITTAL

Project No.:	36179.002
Issued:	4/14/2023
Drawn By:	BH
Checked By:	AD
Scale:	1"=40'

Sheet Title
SAM BASS
DRAINAGE DITCH
PLAN

184
Sheet Number

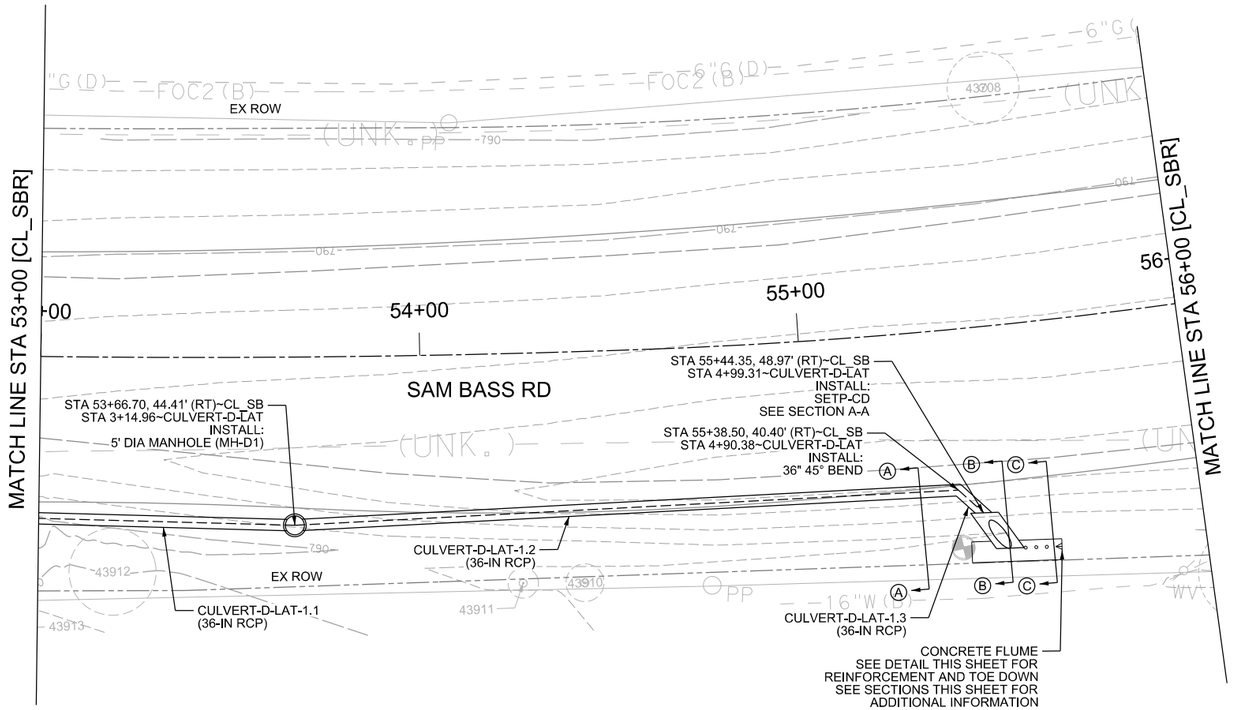



0 20 40 60 80

SCALE: 1"=40'

LEGEND

- ROADWAY CENTERLINE
- EXIST. CONTOURS
- PROP. DRAINAGE EASEMENT
- ROW
- PROPOSED CONTOURS
- PROPOSED DITCH CENTERLINE
- PROPOSED STORM SEWER/ CULVERT
- PROPOSED STORM HEADWALL
- PROPOSED CURB INLET
- STORM TROOPER
- PROPOSED AREA ZONE DRAIN
- PROPOSED MANHOLE

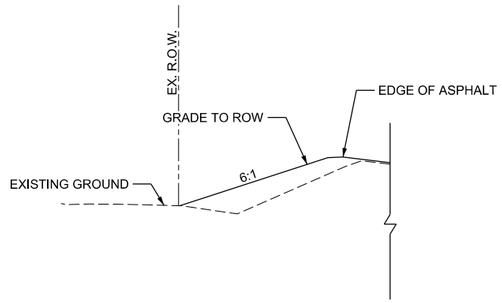

SECTION A-A
N.T.S.

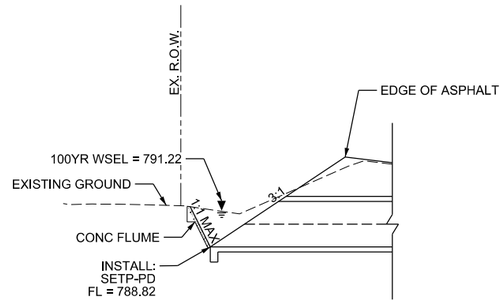

SECTION B-B
N.T.S.

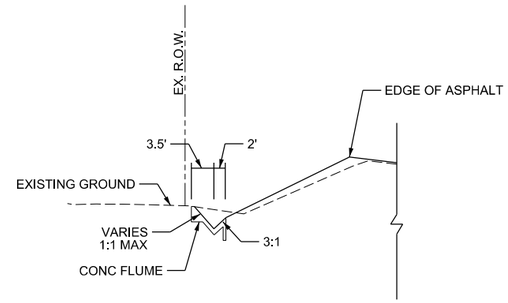

SECTION C-C
N.T.S.

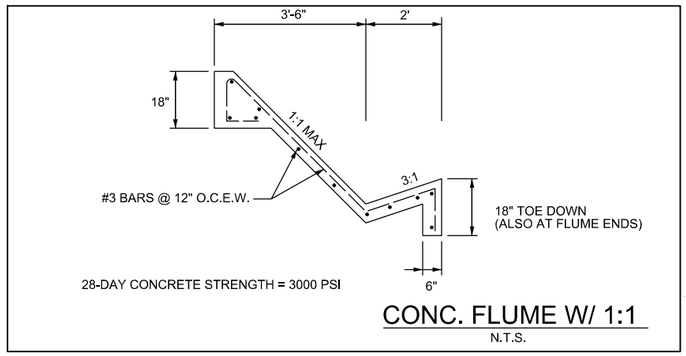

CONC. FLUME W/ 1:1
N.T.S.

WYOMING SPRINGS
SEGMENT 1
ROUND ROCK, TX

ROUND ROCK TEXAS

halff
13620 BRANTWICK DR
BLDG C, STE 100
AUSTIN, TX 78729
(512) 777-4600
TBPELS FIRM #312

Revision No.	Date	Description

F-312 4-14-23
STATE OF TEXAS
ANDREW M. L. DUTTON
117255
LICENSED
PROFESSIONAL ENGINEER

100% SUBMITTAL

Project No.:	36179.002
Issued:	4/14/2023
Drawn By:	BH
Checked By:	AD
Scale:	1"=40'

Sheet Title
CULVERT D LATERAL PLAN

185
Sheet Number

CULVERT B LAT-1

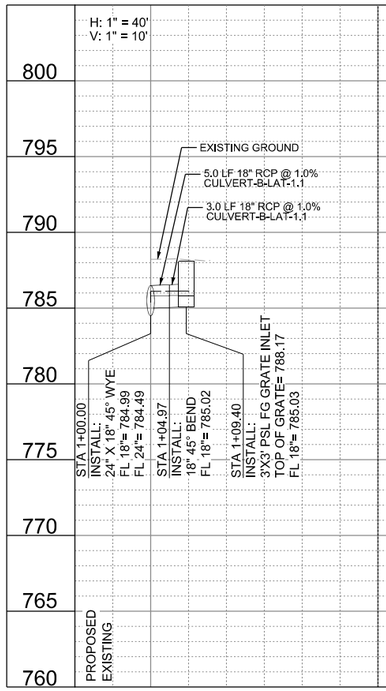

CULVERT B LAT-2

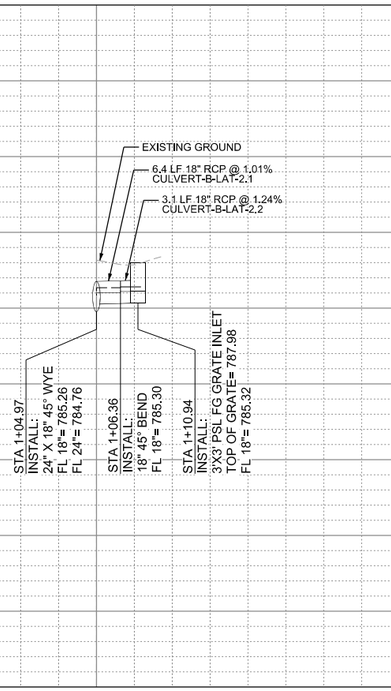

CULVERT D LAT-1

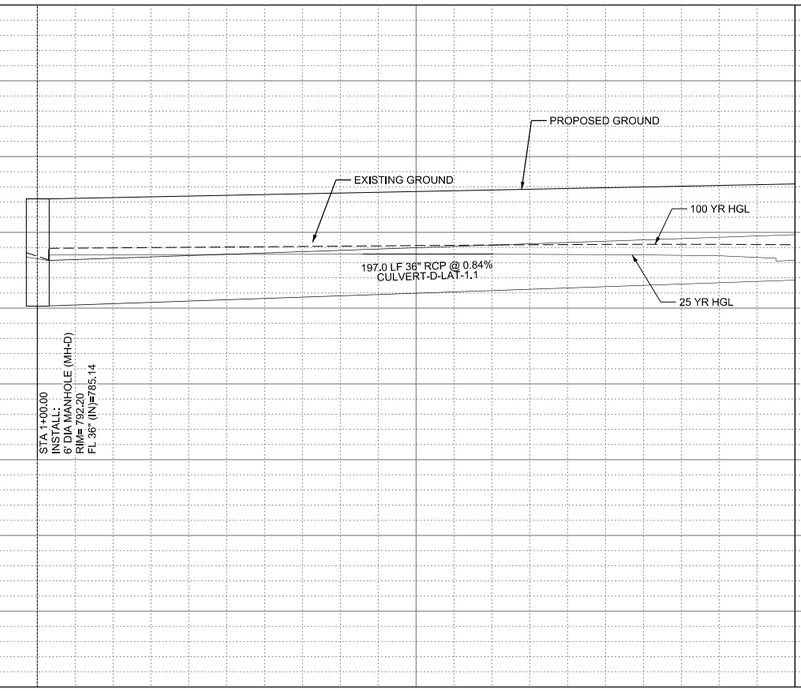

CULVERT D LAT-1

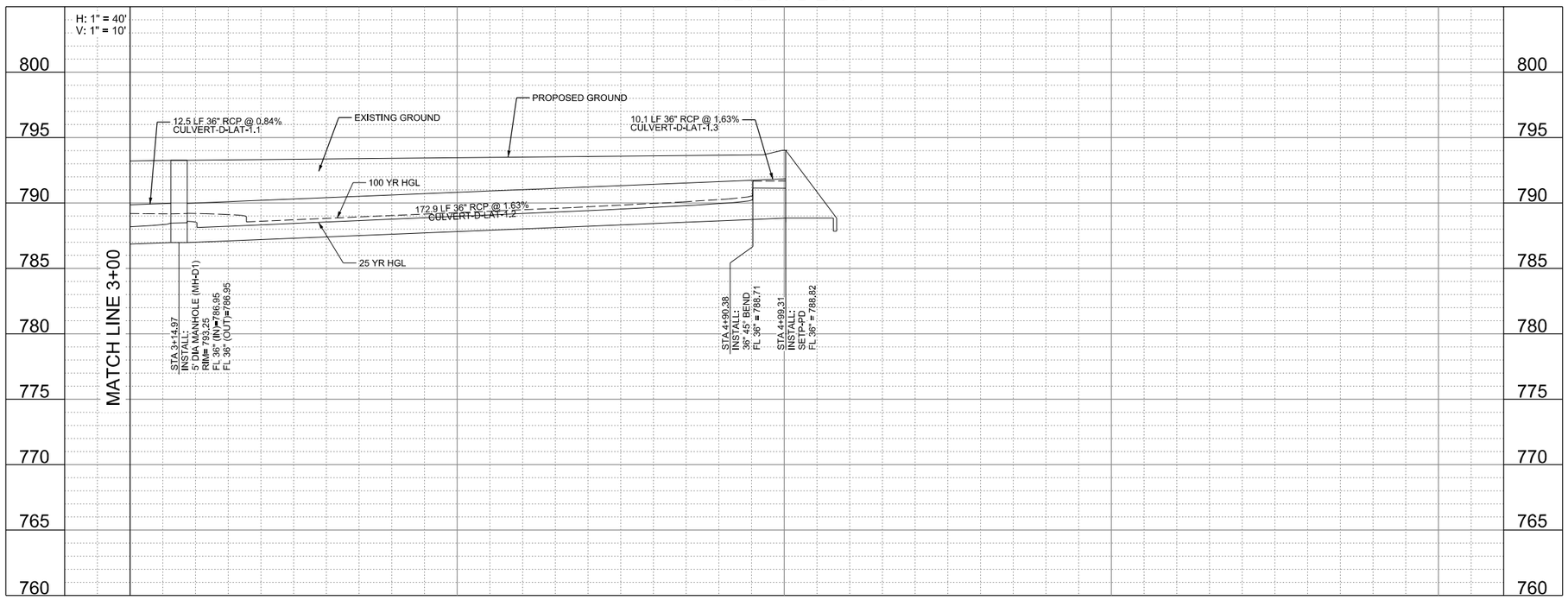

0 20 40 60 80

SCALE: 1"=40'

LEGEND

- 1+00 — ROADWAY CENTERLINE
- 760 — EXIST. CONTOURS
- PROP. DRAINAGE EASEMENT
- ROW
- 760 — PROPOSED CONTOURS
- PROPOSED DITCH CENTERLINE
- PROPOSED STORM SEWER/ CULVERT
- PROPOSED STORM HEADWALL
- PROPOSED CURB INLET
- STORM TROOPER
- PROPOSED AREA ZONE DRAIN
- PROPOSED MANHOLE

NOTES:

1. ALL BENDS,WYES, AND TRANSITIONS SHALL BE PRE-FABRICATED.
2. ALL MANHOLES SHALL UTILIZE CITY OF ROUND ROCK FRAME AND COVERS.
3. SEE HYDRAULIC CALCULATIONS SHEET, LINK CONFIGURATION AND LOCATION OF STATION/OFFSET PER STRUCTURE TYPE.
4. ALL NON-CITY INFRASTRUCTRE INCLUDING GAS, ELECTRIC, CABLE, AND TELECOMMUNICATIONS SHALL TRAVERSE UNDERNEATH CITY INFRASTUCTURE. THIS INCLUDES, BUT IS NOT LIMITED TO WATER LINES AND STORM SEWER, WITH A MINIMUM OUTSIDE-TO OUTSIDE CLEARANCE OF 18-INCHES.

WYOMING SPRINGS
SEGMENT 1
ROUND ROCK, TX

ROUND ROCK TEXAS

halff
13620 BRANTWICK DR
BLDG C, STE 100
AUSTIN, TX 78729
(512) 777-4600
TBPELS FIRM #312

Revision No.	Date	Description

F312 4-14-23
STATE OF TEXAS
ANDREW M. L. DUTTON
117255
LICENSED
PROFESSIONAL ENGINEER

100% SUBMITTAL

Project No.:	36179.002
Issued:	4/14/2023
Drawn By:	BH
Checked By:	AD
Scale:	H:1"=40', V:1"=10'

Sheet Title
CULVERT D LATERAL PROFILE

186
Sheet Number

DITCH 1W (N_CHANNEL)

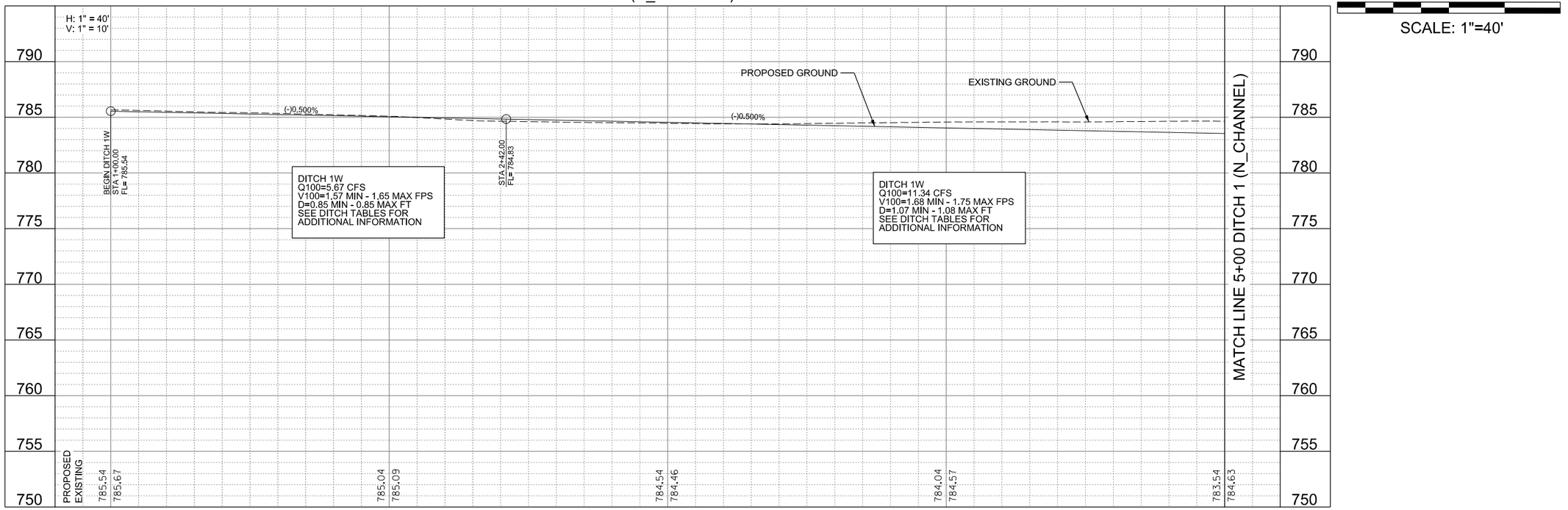

DITCH 1W AND 1E (N_CHANNEL)

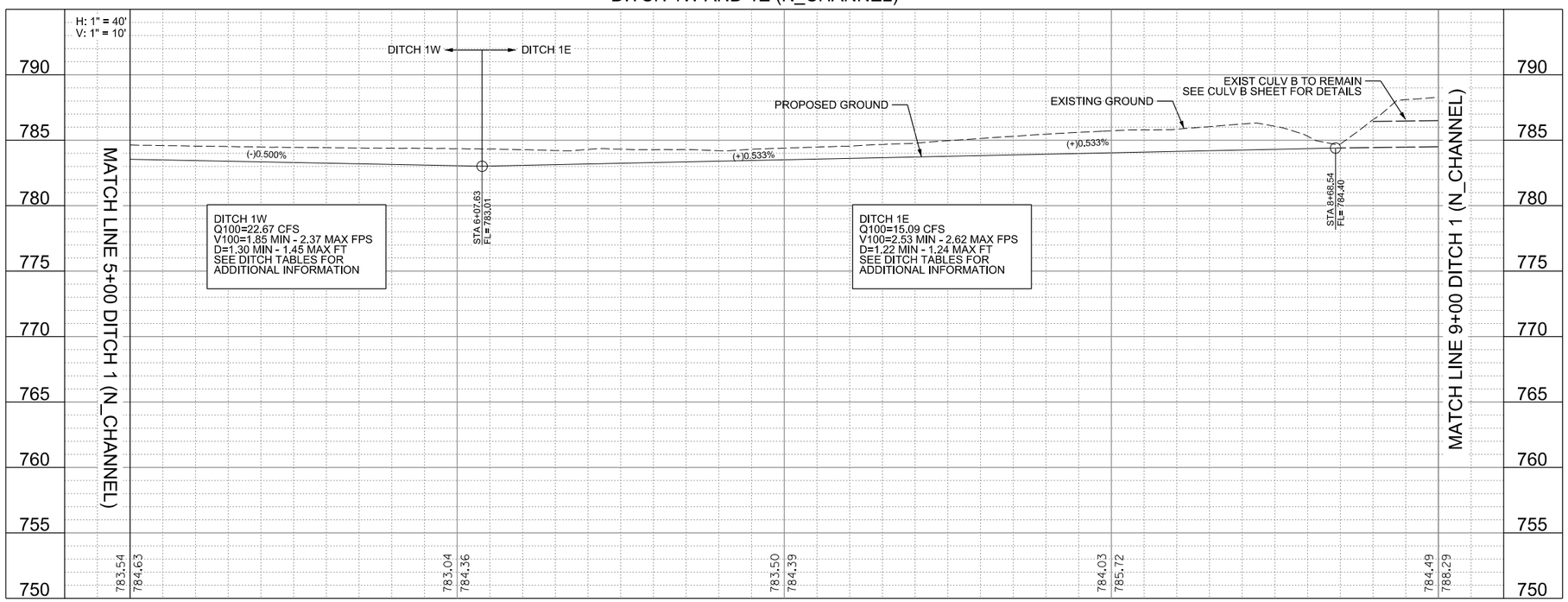

WYOMING SPRINGS
SEGMENT 1
ROUND ROCK, TX

ROUND ROCK
TEXAS

halff
13620 BRANTWICK DR
BLDG C, STE 100
AUSTIN, TX 78729
(512) 777-4600
TBPELS FIRM #312

Revision No.	Date	Description

F-312 4-14-23
STATE OF TEXAS
ANDREW M. L. DUTTON
117255
LICENSED
PROFESSIONAL ENGINEER

100% SUBMITTAL

Project No.:	36179.002
Issued:	4/14/2023
Drawn By:	BH
Checked By:	AD
Scale:	H:1"=40', V:1"=10'

Sheet Title
DRAINAGE DITCH PROFILE

187
Sheet Number

DITCH 1E AND 2W (N_CHANNEL)

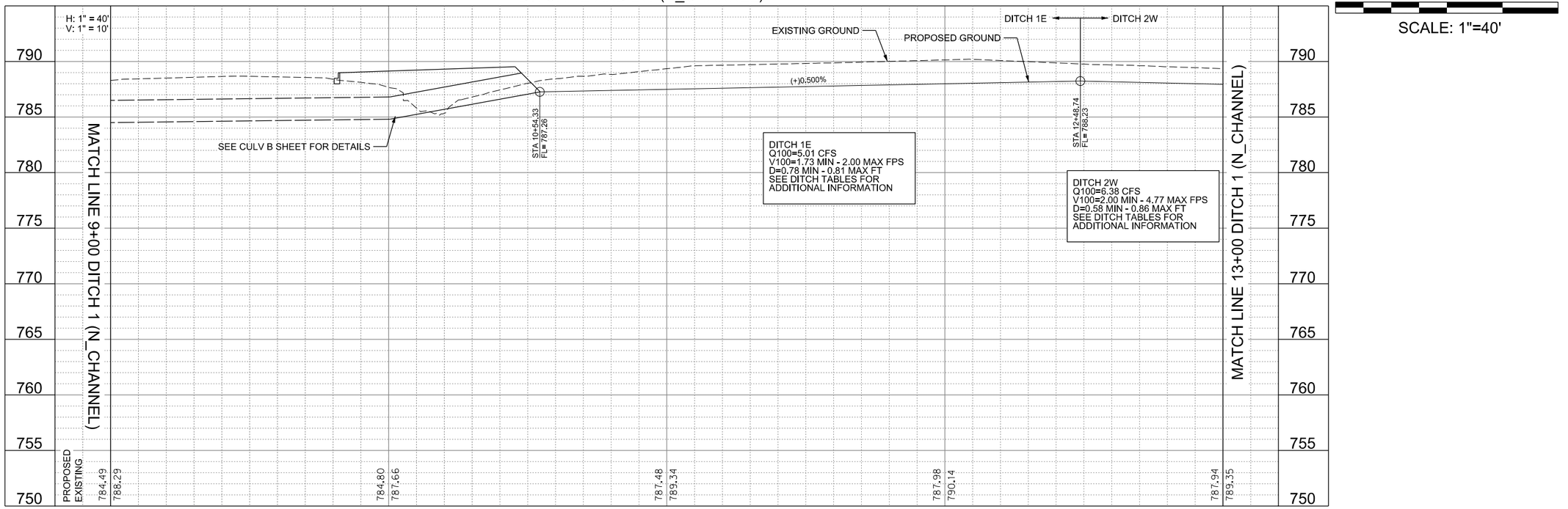

DITCH 2W (N_CHANNEL)

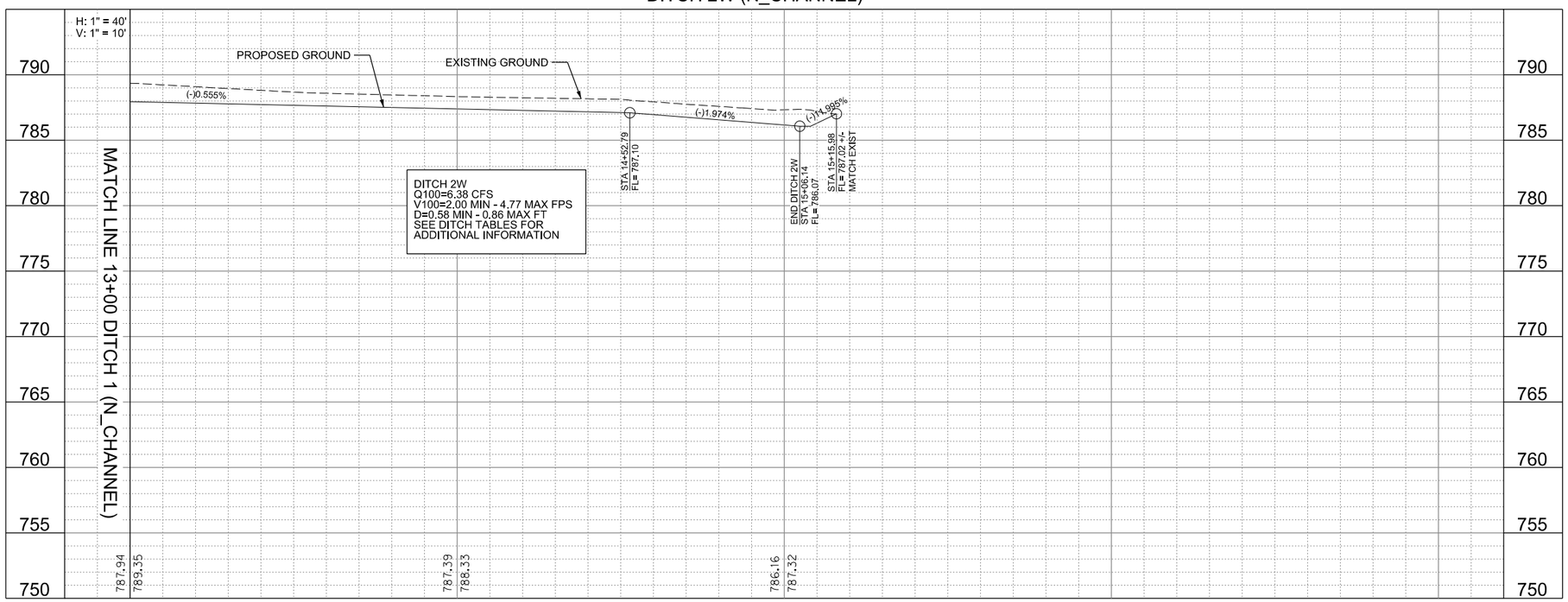

WYOMING SPRINGS
SEGMENT 1
ROUND ROCK, TX

ROUND ROCK
TEXAS

halff
13620 BRANTWICK DR
BLDG C, STE 100
AUSTIN, TX 78729
(512) 777-4600
TBPELS FIRM #312

Revision No.	Date	Description

F-312 4-14-23
STATE OF TEXAS
ANDREW M. L. DUTTON
117255
LICENSED
PROFESSIONAL ENGINEER

100% SUBMITTAL

Project No.:	36179.002
Issued:	4/14/2023
Drawn By:	BH
Checked By:	AD
Scale:	H:1"=40', V:1"=10'

Sheet Title
DRAINAGE DITCH PROFILE

188
Sheet Number

DITCH 3 (SE_CHANNEL)

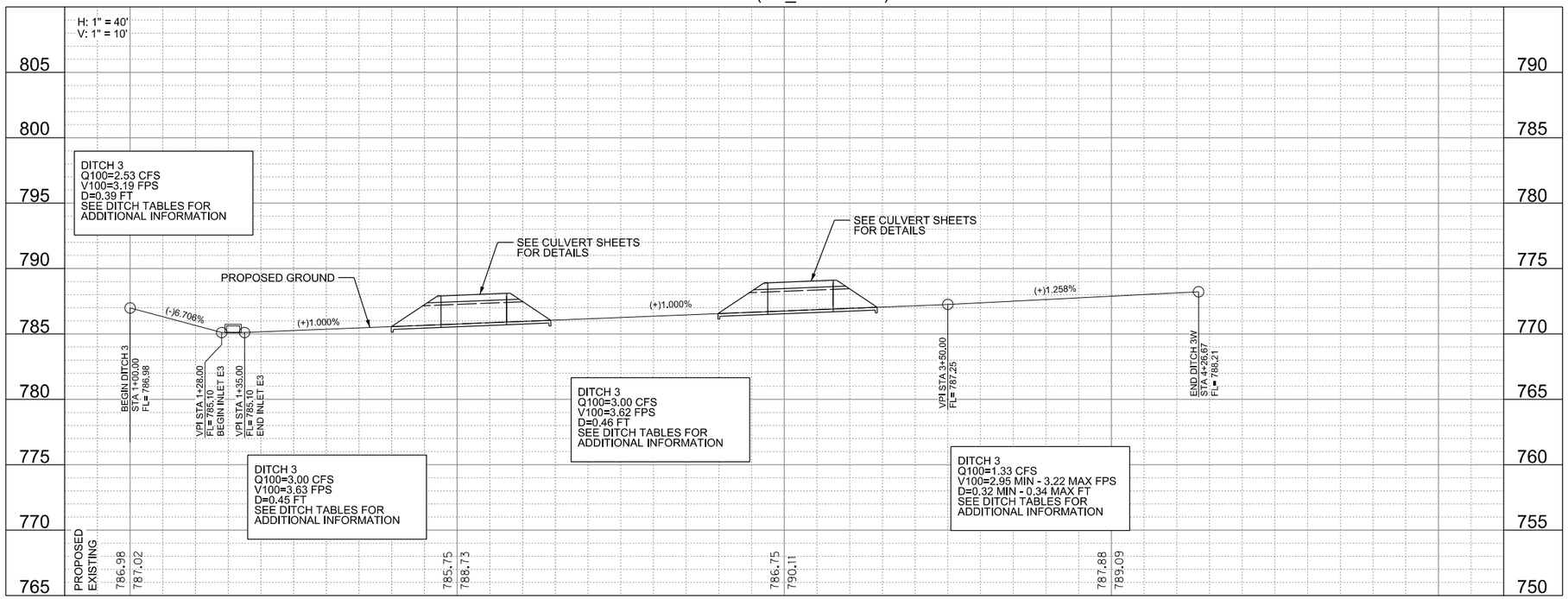

0 20 40 60 80

SCALE: 1"=40'

WYOMING SPRINGS
SEGMENT 1
ROUND ROCK, TX

ROUND ROCK
TEXAS

halff
13620 BRANTWICK DR
BLDG C, STE 100
AUSTIN, TX 78729
(512) 777-4600
TBPELS FIRM #312

Revision No.	Date	Description
.	.	.
.	.	.
.	.	.
.	.	.
.	.	.
.	.	.
.	.	.
.	.	.

F312 4-14-23
STATE OF TEXAS
ANDREW M. L. DUTTON
117255
LICENSED
PROFESSIONAL ENGINEER

100% SUBMITTAL

Project No.:	36179.002
Issued:	4/14/2023
Drawn By:	BH
Checked By:	AD
Scale:	H:1"=40', V:1"=10'

Sheet Title
DRAINAGE DITCH PROFILE

189
Sheet Number

WYOMING SPRINGS - DRAINAGE AREA CALCULATIONS

RUNOFF CALCULATIONS 25 YR									
Drainage ID	TOTAL AREA (acres)	% GRASS	% IMPERVIOUS	COMPOSITE C	C*A	Tc (min)	FREQ (YR)	INTENSITY (IN/HR)	DISCHARGE (CFS)
A1	0.28	16.14%	83.86%	0.79	0.22	5.00	25	11.10	2.47
A2	0.79	25.96%	74.04%	0.74	0.59	5.00	25	11.10	6.54
A3	0.55	40.62%	59.38%	0.67	0.37	5.00	25	11.10	4.12
A4	0.47	32.92%	67.08%	0.71	0.33	5.00	25	11.10	3.73
A5	0.52	33.87%	66.13%	0.71	0.37	5.00	25	11.10	4.13
A6	0.73	16.44%	83.56%	0.79	0.58	5.00	25	11.10	6.45
A7	0.57	29.10%	70.90%	0.73	0.42	5.00	25	11.10	4.66
B1.1	0.27	36.13%	63.87%	0.69	0.19	5.00	25	11.10	2.08
B1.2	0.11	34.35%	65.65%	0.70	0.08	5.00	25	11.10	0.86
B1.3	0.45	27.07%	72.93%	0.74	0.33	5.00	25	11.10	3.73
B2.1	0.21	14.71%	85.29%	0.80	0.17	5.00	25	11.10	1.88
B2.2	0.07	29.37%	70.63%	0.73	0.05	5.00	25	11.10	0.57
B2.3	0.29	69.65%	30.35%	0.54	0.16	6.64	25	10.36	1.64
B3	1.10	60.26%	39.74%	0.58	0.64	9.64	25	9.00	5.79
B4	0.93	57.73%	42.27%	0.59	0.55	10.17	25	8.79	4.86
BCRT	1.15	81.55%	18.45%	0.44	0.51	13.69	25	7.73	3.94
C1.1	0.77	7.27%	92.73%	0.84	0.65	7.91	25	9.79	6.38
C1.2	0.15	20.97%	79.03%	0.77	0.11	5.00	25	11.10	1.29
C2.1	0.85	6.71%	93.29%	0.84	0.72	10.72	25	8.62	6.21
C2.2	0.14	14.62%	85.38%	0.80	0.11	5.00	25	11.10	1.25
C3	0.57	38.46%	61.54%	0.68	0.39	5.00	25	11.10	4.32
C4	1.14	65.59%	34.41%	0.55	0.63	11.02	25	8.53	5.39
D1.1	0.40	41.84%	58.16%	0.67	0.27	5.00	25	11.10	2.92
D1.2	0.45	10.66%	89.34%	0.82	0.37	5.76	25	10.76	3.9
D2.1	0.31	56.66%	43.34%	0.60	0.19	5.00	25	11.10	2.08
D2.2	0.52	13.72%	86.28%	0.60	0.31	5.00	25	11.10	3.49
D3	0.29	55.61%	44.39%	0.60	0.17	5.00	25	11.10	1.95
E1	0.12	24.90%	75.10%	0.75	0.09	5.00	25	11.10	1.14
E2	0.11	25.14%	74.86%	0.75	0.08	5.00	25	10.73	1.18
E3	0.48	29.47%	70.53%	0.72	0.35	5.00	25	11.10	3.87
E4	0.42	26.61%	73.39%	0.74	0.31	5.00	25	11.10	3.32
E5	0.27	13.01%	86.99%	0.80	0.22	5.68	25	11.10	2.82

RUNOFF CALCULATIONS 100 YR									
Drainage ID	TOTAL (acres)	% GRASS	% IMPERVIOUS	COMPOSITE C	C*A	Tc (min)	FREQ (YR)	INTENSITY (IN/HR)	DISCHARGE (CFS)
A1	0.28	16.14%	83.86%	0.87	0.24	5.00	100	14.20	3.49
A2	0.79	25.96%	74.04%	0.83	0.66	5.00	100	14.20	9.39
A3	0.55	40.62%	59.38%	0.75	0.42	5.00	100	14.20	5.9
A4	0.47	32.92%	67.08%	0.79	0.37	5.00	100	14.20	5.31
A5	0.52	33.87%	66.13%	0.79	0.41	5.00	100	14.20	5.88
A6	0.73	16.44%	83.56%	0.87	0.64	5.00	100	14.20	9.09
A7	0.57	29.10%	70.90%	0.81	0.46	5.00	100	14.20	6.61
B1.1	0.27	36.13%	63.87%	0.78	0.21	5.00	100	14.20	3.01
B1.2	0.11	34.35%	65.65%	0.79	0.09	5.00	100	14.20	1.24
B1.3	0.45	27.07%	72.93%	0.82	0.37	5.00	100	14.20	5.28
B2.1	0.21	14.71%	85.29%	0.88	0.19	5.00	100	14.20	2.65
B2.2	0.07	29.37%	70.63%	0.81	0.05	5.00	100	14.20	0.81
B2.3	0.29	69.65%	30.35%	0.61	0.18	6.64	100	13.28	2.37
B3	1.10	60.26%	39.74%	0.66	0.72	9.64	100	11.60	8.49
B4	0.93	57.73%	42.27%	0.67	0.62	10.17	100	11.33	7.12
BCRT	1.15	81.55%	18.45%	0.55	0.63	13.69	100	9.92	6.32
C1.1	0.77	7.27%	92.73%	0.93	0.72	7.91	100	12.57	9.07
C1.2	0.15	20.97%	79.03%	0.85	0.12	5.00	100	14.20	1.82
C2.1	0.85	6.71%	93.29%	0.93	0.79	10.72	100	11.11	8.85
C2.2	0.14	14.62%	85.38%	0.89	0.12	5.00	100	14.20	1.78
C3	0.57	38.46%	61.54%	0.77	0.44	5.00	100	14.20	6.17
C4	1.14	65.59%	34.41%	0.63	0.72	11.02	100	10.99	7.96
D1.1	0.40	41.84%	58.16%	0.75	0.30	5.00	100	14.20	4.24
D1.2	0.45	10.66%	89.34%	0.91	0.41	5.76	100	13.77	5.5
D2.1	0.31	56.66%	43.34%	0.68	0.21	5.00	100	14.20	3.02
D2.2	0.52	13.72%	86.28%	0.90	0.47	5.00	100	14.20	6.62
D3	0.29	55.61%	44.39%	0.68	0.20	5.00	100	14.20	2.82
E1	0.12	24.90%	75.10%	0.83	0.10	5.00	100	14.20	1.63
E2	0.11	25.14%	74.86%	0.79	0.09	5.00	100	13.74	1.59
E3	0.48	29.47%	70.53%	0.81	0.39	5.00	100	14.20	5.57
E4	0.42	26.61%	73.39%	0.82	0.34	5.00	100	14.20	4.74
E5	0.27	13.01%	86.99%	0.89	0.24	5.68	100	14.20	4.08

STATION & OFFSET OF DAINAGE STRUCTURES DETAIL

N.T.S.

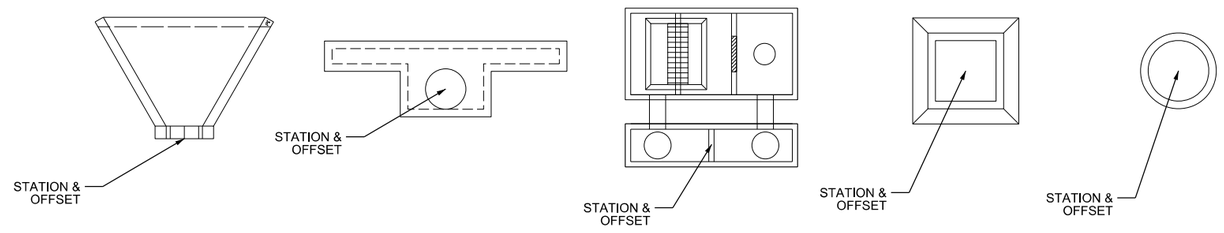

WYOMING SPRINGS
SEGMENT 1
ROUND ROCK, TX

ROUND ROCK TEXAS

halff
13620 BRANTWICK DR
BLDG C, STE 100
AUSTIN, TX 78729
(512) 777-4600
TBPELS FIRM #312

Revision No.	Date	Description
.	.	.
.	.	.
.	.	.
.	.	.
.	.	.
.	.	.
.	.	.
.	.	.

F-312 4/28/23
STATE OF TEXAS
JEFFREY L. NAGY
133255
LICENSED
PROFESSIONAL ENGINEER

100% SUBMITTAL

Project No.:	36179.002
Issued:	4/28/2023
Drawn By:	SG
Checked By:	JN
Scale:	N.T.S

Sheet Title
DRAINAGE CALCULATIONS (1 OF 12)

190
Sheet Number

WYOMING SPRINGS - TIME OF CONCENTRATION CALCULATIONS

	Time of Concentration																	
	Sheet Flow							Shallow Concentrated Flow						Channel Flow				
BASIN NAME	n	L (ft)	P_2 (in)	US Elev	DS Elev	s (ft/ft)	T_{sheet} (min)	L (ft)	K_{SEG}	US Elev	DS Elev	s (ft/ft)	$T_{shallow}$	L_{CH}	V	t_{CH}	Calculated t_C (min)	Design t_C (min)
A1	0.016	52.24	3.97	769.10	767.00	0.040	**0.66**	149.88	20.3282	767.00	762.32	0.031	**0.70**	0.00	4.00	**0.00**	1.36	**5.00**
		52.24					**0.66**						**0.70**			**0.00**		
A2	0.150	14.38	3.97	785.42	784.82	0.042	1.39	547.28	20.3282	782.76	762.28	0.037	2.32	0.00	4.00	0.00	4.22	**5.00**
	0.015	2.93	3.97	784.82	784.23	0.201	0.03											
	0.016	35.68	3.97	784.23	782.76	0.041	0.48											
		52.99					**1.90**						**2.32**			0.00		
A3	0.150	11.50	3.97	785.43	785.00	0.037	1.21	378.53	20.3282	783.49	768.75	0.039	1.57	0.00	4.00	0.00	3.23	**5.00**
	0.015	2.30	3.97	785.00	784.43	0.248	0.02											
	0.016	27.57	3.97	784.43	783.49	0.034	0.42											
		41.37					**1.66**						**1.57**			0.00		
A4	0.150	11.50	3.97	794.290	793.950	0.030	1.33	413.10	20.3282	792.71	784.81	0.019	2.45	0.00	4.00	0.00	4.28	**5.00**
	0.015	2.30	3.97	793.950	793.410	0.235	0.03											
	0.016	27.61	3.97	793.410	792.710	0.025	0.48											
		41.41					**1.84**						**2.45**			0.00		
A5	0.150	14.54	3.97	794.87	794.45	0.029	1.62	405.37	20.3282	793.01	784.31	0.021	2.27	0.00	4.00	0.00	4.50	**5.00**
	0.015	2.89	3.97	794.45	793.89	0.194	0.03											
	0.016	34.62	3.97	793.89	793.01	0.025	0.57											
		52.05					**2.23**						**2.27**			0.00		
A6	0.016	65.26	3.97	801.230	800.130	0.017	1.12	393.15	20.3282	800.13	794.13	0.015	2.61	0.00	4.00	0.00	3.73	**5.00**
		65.26					**1.12**						**2.61**			0.00		
A7	0.016	64.03	3.97	801.49	799.84	0.026	0.93	397.34	20.3282	799.84	793.56	0.016	2.59	0.00	4.00	0.00	3.52	**5.00**
		64.03					**0.93**						**2.59**			0.00		
B1.1	0.150	15.41	3.97	763.060	762.530	0.034	1.59	158.49	20.3282	760.93	759.52	0.009	**1.38**	0.00	4.00	**0.00**	3.51	**5.00**
	0.015	2.75	3.97	762.530	761.970	0.204	0.03											
	0.016	33.36	3.97	761.970	760.930	0.031	0.51											
		51.52					**2.13**						**1.38**			**0.00**		
B1.2	0.150	9.11	3.97	761.47	761.24	0.025	1.18	66.73	20.3282	760.33	759.50	0.012	**0.49**				2.25	**5.00**
	0.015	1.77	3.97	761.24	760.71	0.299	0.02											
	0.016	25.94	3.97	760.71	760.33	0.015	0.56											
		36.82					**1.76**						**0.49**			0.00		
B1.3	0.150	7.52	3.97	768.57	768.40	0.023	1.06	379.23	20.3282	767.37	759.86	0.020	**2.21**				3.96	**5.00**
	0.015	2.71	3.97	768.40	767.88	0.192	0.03											
	0.016	32.52	3.97	767.88	767.37	0.016	0.66											
		42.75					**1.75**						**2.21**			0.00		
B2.1	0.150	2.03	3.97	763.06	762.94	0.059	0.25	118.65	16.1345	760.70	759.88	0.007	1.47	0.00	4.00	0.00	2.56	**5.00**
	0.015	3.25	3.97	762.94	762.36	0.178	0.04											
	0.016	56.42	3.97	762.36	760.70	0.029	0.80											
		61.70					**1.09**						**1.47**			0.00		
B2.2	0.150	15.13	3.97	760.76	760.40	0.024	1.81										1.84	**5.00**
	0.015	2.39	3.97	760.40	759.84	0.234	0.03											
	0.016	30.57	3.97	759.84	759.83	0.005	0.99											
		48.09					**1.84**						**0.00**			0.00		
B2.3	0.150	100.00	3.97	770.20	764.35	0.059	5.73	31.15	16.1345	764.35	763.35	0.032	0.18	0.00	4.00	0.00	6.64	**6.64**
								9.14	20.3282	763.35	763.12	0.025	0.05					
								57.72	16.1345	763.12	760.55	0.045	0.28					
								14.21	20.3282	760.55	760.23	0.023	0.08					
								2.21	16.1345	760.23	767.00	0.005	0.03					
								5.61	20.3282	767.00	760.11	1.228	0.00					
								31.72	20.3282	760.11	759.85	0.008	0.29					
		100.00					**5.73**						**0.91**			0.00		
B3	0.150	100.00	3.97	774.00	771.51	0.025	8.06	85.73	16.1345	771.51	769.29	0.026	0.55	0.00	4.00	0.00	9.64	**9.64**
								10.77	20.3282	769.29	768.83	0.043	0.04					
								32.67	16.1345	768.83	766.85	0.061	0.14					
								10.41	20.3282	766.85	766.33	0.050	0.04					
								21.12	16.1345	766.33	763.61	0.129	0.06					
								136.76	20.3282	763.61	760.55	0.022	0.75					
		100.00					**8.06**						**1.58**			0.00		
B4	0.150	100.00	3.97	775.00	773.00	0.020	8.80	57.14	16.1345	773.00	771.59	0.025	0.38	0.00	4.00	0.00	10.17	**10.17**
								8.67	20.3282	771.59	771.49	0.011	0.07					
								38.96	16.1345	771.49	767.77	0.095	0.13					
								11.35	20.3282	767.77	767.14	0.056	0.04					
								2.21	16.1345	767.14	767.00	0.063	0.01					
								130.84	20.3282	767.00	764.32	0.020	0.75					
		100.00					**8.80**						**1.37**			0.00		
C1.1	0.150	7.26	3.97	768.570	768.420	0.021	1.07	818.43	20.3282	767.36	759.50	0.010	6.85	0.00	4.00	0.00	7.91	**7.91**
	0.015	2.65	3.97	768.420	767.890	0.200	0.03											
	0.016	31.71	3.97	767.890	767.360	0.017	0.63											
		41.62					**1.07**						**6.85**			0.00		

WYOMING SPRINGS
SEGMENT 1
ROUND ROCK, TX

ROUND ROCK
TEXAS

halff
13620 BRANTWICK DR
BLDG C, STE 100
AUSTIN, TX 78729
(512) 777-4600
TBPELS FIRM #312

Revision No.	Date	Description

STATE OF TEXAS
JEFFREY L NAGY
133255
LICENSED
PROFESSIONAL ENGINEER
4/28/23

100% SUBMITTAL

Project No.:	36179.002
Issued:	4/28/2023
Drawn By:	SG
Checked By:	JN
Scale:	N.T.S

Sheet Title
DRAINAGE CALCULATIONS (2 OF 12)

191
Sheet Number

User: JONATHAN.NYHAUS.E
P:\Civil\36179.002 STRMH\CAD\Sheets\AUS\36179.002 STRMH CALCS R16.dgn
4/28/2023 11:15:14 AM
ab1914
H:\4.F
Layout: C-DRAINAGE CALCS

WYOMING SPRINGS - TIME OF CONCENTRATION CALCULATIONS

	Time of Concentration																
	Sheet Flow							Shallow Concentrated Flow						Channel Flow				
BASIN NAME	n	L (ft)	P_2 (in)	US Elev	DS Elev	s (ft/ft)	T_{sheet} (min)	L (ft)	K_{SEG}	US Elev	DS Elev	s (ft/ft)	$T_{shallow}$	L_{CH}	V	t_{CH}	Calculated t_c (min)	Design t_c (min)
C1.1	0.150	7.26	3.97	768.570	768.420	0.021	1.07	818.43	20.3282	767.36	759.50	0.010	6.85	0.00	4.00	0.00	7.91	**7.91**
	0.015	2.65	3.97	768.420	767.890	0.200	0.03											
	0.016	31.71	3.97	767.890	767.360	0.017	0.63											
		41.62					**1.07**						**6.85**			0.00		
C1.2	0.015	5.00	3.97	760.40	759.83	0.114	0.06							0.00	4.00	0.00	0.73	**5.00**
	0.016	31.73	3.97	759.83	759.37	0.014	0.67											
		36.73					**0.73**						**0.00**			0.00		
C1.3	0.015	4.50	3.97	761.150	760.560	0.131	0.05	73.27	20.3282	760.08	759.52	0.008	0.69	0.00			0.74	**5.00**
	0.016	2.33	3.97	760.560	760.080	0.206	0.03											
		6.83					**0.05**						**0.69**			0.00		
C2.1	0.150	14.92	3.97	768.33	768.82	0.005	3.34	797.48	20.3282	767.27	759.78	0.009	6.75	0.00	4.00	0.00	10.72	**10.72**
	0.015	2.72	3.97	768.82	767.82	0.368	0.02											
	0.016	30.89	3.97	767.82	767.27	0.018	0.60											
		48.53					**3.97**						**6.75**			0.00		
C2.2	0.015	4.81	3.97	760.400	759.830	0.119	0.06							0.00			0.06	**5.00**
	0.016	30.47	3.97	759.830	759.730	0.005	0.99											
		35.28					**0.06**						**0.00**			0.00		
C3	0.150	15.64	3.97	768.580	768.240	0.022	1.93	400.93	20.3282	767.22	760.50	0.017	2.54	0.00	4.00	0.00	4.47	**5.00**
	0.015	2.33	3.97	768.240	767.710	0.227	0.03											
	0.016	28.16	3.97	767.710	767.220	0.017	0.56											
		46.13					**1.93**						**2.54**			0.00		
C4	0.150	100.00	3.97	775.89	773.50	0.024	8.19	61.39	16.1345	773.50	771.07	0.040	0.32	0.00	4.00	0.00	11.02	**11.02**
								10.10	20.3282	771.07	770.99	0.008	0.09					
								36.21	16.1345	770.99	767.65	0.092	0.12					
								393.34	20.3282	767.65	759.89	0.020	2.30					
		100.00					**8.19**						**2.83**			0.00		
D1.1	0.150	16.02	3.97	768.58	768.25	0.021	2.01	240.87	20.3282	767.39	765.40	0.008	2.17	0.00	4.00	0.00	4.92	**5.00**
	0.015	2.59	3.97	768.25	767.73	0.201	0.03											
	0.016	30.09	3.97	767.73	767.39	0.011	0.71											
		48.70					**2.74**						**2.17**			0.00		
D1.2	0.150	12.50	3.97	779.050	778.070	0.078	0.97	412.51	20.3282	776.73	765.38	0.028	2.04	0.00	4.00	0.00	5.76	**5.76**
	0.015	2.61	3.97	778.070	777.960	0.042	0.06											
	0.150	31.75	3.97	777.960	776.730	0.039	2.70											
		46.86					**3.72**						**2.04**			0.00		
D2.1	0.150	16.94	3.97	767.25	766.73	0.031	1.79	94.79	20.3282	765.37	765.29	0.005	1.10	0.00	4.00	0.00	3.45	**5.00**
	0.015	2.80	3.97	766.73	766.18	0.196	0.03											
	0.016	31.74	3.97	766.18	765.37	0.026	0.53											
		51.48					**2.35**						**1.10**			0.00		
D2.2	0.150	9.64	3.97	779.050	778.680	0.038	1.04	448.75	20.3282	777.20	765.29	0.027	2.26	0.00	4.00	0.00	3.65	**5.00**
	0.015	28.65	3.97	778.680	777.200	0.052	0.35											
		38.29					**1.39**						**2.26**			0.00		
D3	0.150	22.03	3.97	772.330	770.850	0.067	1.62	121.08	20.3282	767.67	766.35	0.011	0.95	0.00	4.00	0.00	4.50	**5.00**
	0.015	10.68	3.97	770.850	770.660	0.018	0.24											
	0.150	28.92	3.97	770.660	767.670	0.103	1.69											
		61.63					**3.55**						**0.95**			0.00		
E2	0.150	10.32	3.97	782.50	782.08	0.041	1.08	63.34	20.3282	780.45	788.51	0.005	0.73	0.00	4.00	0.00	2.27	**5.00**
	0.015	2.59	3.97	782.08	781.51	0.220	0.03											
	0.016	28.91	3.97	781.51	780.45	0.037	0.43											
		41.82					**1.53**						**0.73**			0.00		
E3	0.016	19.24	3.97	789.45	788.84	0.032	0.33							285.78	3.00	1.59	3.65	**5.00**
	0.150	12.22	3.97	788.84	788.63	0.017	1.74											
		31.46					**2.07**											
E4	0.150	6.80	3.97	789.79	789.51	0.041	0.77	156.11	20.3282	786.77	781.51	0.034	0.70	0.00	4.00	0.00	2.65	**5.00**
	0.016	93.20	3.97	789.51	786.77	0.029	1.19											
		100.00					**1.96**						**0.70**			0.00		
E5	0.100	100.00	3.97	789.06	784.82	0.042	4.71	155.92	20.3282	784.82	782.11	0.017	0.97	0.00	4.00	0.00	5.68	**5.68**
		100.00					**4.71**						**0.97**			0.00		
OSD1	0.016	43.30	3.97	778.24	777.49	0.017	0.80	155.44	16.1345	776.52	773.13	0.022	1.09	214.17	6.00	0.59	8.43	**8.43**
	0.150	56.70	3.97	777.49	776.52	0.02	5.95											
		100.00					**6.74**						**1.09**			0.59		
BCRT	0.150	100.00	3.97	775.76	773.75	0.020	8.78	34.09	16.1345	773.75	772.42	0.039	0.18	246.40	0.95	4.32	13.69	**13.69**
								8.31	20.3282	772.42	772.24	0.022	0.05					
								39.61	16.1345	772.24	771.74	0.013	0.36					
		100.00					**8.78**						**0.59**			**4.32**		

WYOMING SPRINGS
SEGMENT 1
ROUND ROCK, TX

ROUND ROCK TEXAS

halff
13620 BRANTWICK DR
BLDG C, STE 100
AUSTIN, TX 78729
(512) 777-4600
TBPELS FIRM #312

Revision No.	Date	Description

F-312 4/5/23
STATE OF TEXAS
JEFFREY L NAGY
133255
LICENSED
PROFESSIONAL ENGINEER

100% SUBMITTAL

Project No.:	36179.002
Issued:	4/28/2023
Drawn By:	SG
Checked By:	JN
Scale:	N.T.S

Sheet Title
DRAINAGE CALCULATIONS (3 OF 12)

192
Sheet Number

4/28/2023 1:15:15 AM ek0914 HALFF Date: 4/28/2023 User: ek0914 J:\HALFF_JOBS\36179.002\CAD\Civil\Drainage\Exhibits\DRAINAGE EXHIBITS.dgn

WYOMING SPRINGS - STORM DRAIN LINK CONFIGURATION

LINK CONFIGURATION - LINK A									
LINK ID	U/S NODE	D/S NODE	LENGTH	SHAPE	DIAMETER	n VALUE	SLOPE	U/S INVERT	D/S INVERT
			[FT]		[FT]		[%]	[FT]	[FT]
LINE-A1	MH-A1	OUTFALL A1	39.20	CIRCULAR	1.5	0.013	-7.94	774.11	771.00
LINE-A2	MH-A2	MH-A1	88.40	CIRCULAR	1.5	0.013	-3.89	777.55	774.11
LINE-A3	MH-A3	MH-A2	0.00	CIRCULAR	1.5	0.013	-12.50	777.00	775.62
LINE-A4	WQ-2	MH-A3	0.00	CIRCULAR	1.5	0.013	9.63	774.72	775.62
LINE-A5	T-68	WQ-2	12.10	CIRCULAR	1.5	0.013	-2.07	752.19	751.94
LINE-A6	T-69	T-68	250.00	CIRCULAR	1.5	0.013	-4.27	765.87	755.19
LINE-A7	CB-A4	T-69	143.60	CIRCULAR	1.5	0.013	3.57	765.87	771.00
LINE-A8	CB-A7	CB-A4	178.80	CIRCULAR	1.5	0.013	-4.31	779.21	771.50
LAT-A1.1	MH-A3	T-66	65.90	CIRCULAR	1.5	0.013	-2.98	773.46	771.50
LAT-A1.2	T-66	WQ-1	26.10	CIRCULAR	1.5	0.013	-1.69	773.90	773.46
LAT-A1.3	CB-A5	WQ-1	132.60	CIRCULAR	1.5	0.013	-5.32	780.96	773.90
LAT-A1.4	CB-A6	CB-A5	371.20	CIRCULAR	1.5	0.013	-1.51	786.56	780.96
LAT-A2-1	T-A3	MH-A1	44.10	CIRCULAR	1.5	0.013	-10.08	757.13	752.69
LAT-A2.2	WQ-3	T-A3	4.50	CIRCULAR	1.5	0.013	-11.61	757.65	757.13
LAT-A2.3	CB-A1	WQ-3	12.00	CIRCULAR	1.5	0.013	-0.50	757.71	757.65
LAT-A2.4	CB-A3	CB-A1	200.00	CIRCULAR	1.5	0.013	-3.52	764.75	757.71
LAT-A3.1	WQ-4	OUTFALL A2	28.40	CIRCULAR	1.5	0.013	-9.75	757.02	754.25
LAT-A3.2	CB-A2	WQ-4	10.50	CIRCULAR	1.5	0.013	-11.71	758.25	757.02

LINK CONFIGURATION - LINK B									
LINK ID	U/S NODE	D/S NODE	LENGTH	SHAPE	DIAMETER	n VALUE	SLOPE	U/S INVERT	D/S INVERT
			[FT]		[FT]		[%]	[FT]	[FT]
LINE-B1	T-59	OUTFALL B2	5.70	CIRCULAR	1.5	0.013	-4.58	779.62	779.21
LINE-B2	MH-B1	T-59	76.90	CIRCULAR	1.5	0.013	-4.01	780.03	779.62
LINE-B3	T-60	MH-B1	68.00	CIRCULAR	1.5	0.013	-0.52	780.47	780.03
LINE-B4	WQ-7	T-60	10.90	CIRCULAR	1.5	0.013	-0.46	788.78	780.47
LINE-B5	CB-B3	WQ-7	10.00	CIRCULAR	1.5	0.013	-8.10	752.38	752.12
LINE-B6	CB-B4	CB-B3	179.00	CIRCULAR	1.5	0.013	-2.25	755.46	752.38
LAT-B1.1	T-B2	OUTFALL B1	3.90	CIRCULAR	1.5	0.013	-0.51	752.54	752.52
LAT-B1.2	WQ-5	T-B2	8.80	CIRCULAR	1.5	0.013	-0.46	752.58	752.54
LAT-B1.3	T-75	WQ-5	9.80	CIRCULAR	1.5	0.013	-0.51	752.63	752.58
LAT-B1.4	CB-B1.1	T-75	35.20	CIRCULAR	1.5	0.013	-0.40	752.83	752.81
LAT-B1.5	CB-B1.2	CB-B1.1	7.00	CIRCULAR	1.5	0.013	3.49	752.83	752.81
LAT-B1.4	T-75	CB-B1.2	35.20	CIRCULAR	1.5	0.013	0.51	752.81	752.63
LAT-B1.6	CB-B1.2	T-75	29.90	CIRCULAR	1.5	0.013	-3.72	752.83	753.85
LAT-B2.1	CB-B1.1	CB-B1.2	12.10	CIRCULAR	1.5	0.013	-3.47	753.85	756.74
LAT-B2.2	CB-B1.2	CB-B1.1	23.80	CIRCULAR	1.5	0.013	-3.48	753.67	753.25
LAT-B2.3	T-61	CB-B1.2	12.60	CIRCULAR	2	0.013	-0.56	754.5	753.67

LINK CONFIGURATION - LINK C									
LINK ID	U/S NODE	D/S NODE	LENGTH	SHAPE	DIAMETER	n VALUE	SLOPE	U/S INVERT	D/S INVERT
			[FT]		[FT]		[%]	[FT]	[FT]
LINE-C1	MH-C2	OUTFALL C	240.30	CIRCULAR	2.5	0.013	-1.44	736.88	733.42
LINE-C2	MH-C3	MH-C2	72.40	CIRCULAR	2.0	0.013	-2.87	739.46	737.38
LINE-C3	T-C6	MH-C3	56.10	CIRCULAR	2.0	0.013	-9.25	754.19	749.00
LINE-C4	WQ-8	T-C6	4.50	CIRCULAR	2.0	0.013	-9.11	754.60	754.19
LINE-C5	CB-C2.1	WQ-8	9.20	CIRCULAR	2.0	0.013	-2.73	754.85	754.60
LINE-C6	CB-C2.2	CB-C2.1	25.00	CIRCULAR	2.0	0.013	-1.00	755.10	754.85
LINE-C7	CB-C4	CB-C2.2	106.20	CIRCULAR	1.5	0.013	-0.98	756.64	755.60
LAT-C1.1	T-C2	MH-C3	26.00	CIRCULAR	2.0	0.013	-12.22	752.18	749.00
LAT-C1.2	WQ-9	T-C2	21.60	CIRCULAR	2.0	0.013	-11.19	754.60	752.18
LAT-C1.3	CB-C1.1	WQ-9	34.10	CIRCULAR	2.0	0.013	-1.32	755.05	754.60
LAT-C1.4	CB-C1.2	CB-C1.1	30.40	CIRCULAR	1.5	0.013	-0.49	755.70	755.55
LAT-C1.	CB-C3	CB-C1.2	119.3	CIRCULAR	1.5	0.013	-0.78	756.63	755.70

LINK CONFIGURATION - LINK D									
LINK ID	U/S NODE	D/S NODE	LENGTH	SHAPE	DIAMETER	n VALUE	SLOPE	U/S INVERT	D/S INVERT
			[FT]		[FT]		[%]	[FT]	[FT]
LINE-D1	T-62	OUTFALL D	5.00	CIRCULAR	2	0.013	-2.22	754.50	754.39
LINE-D2	MH-D1	T-62	68.60	CIRCULAR	2	0.013	-4.01	757.25	754.50
LINE-D3	T-D2	MH-D1	67.00	CIRCULAR	1.5	0.013	-1.73	758.91	757.75
LINE-D4	WQ-10	T-D2	5.90	CIRCULAR	1.5	0.013	-1.52	759.00	758.91
LINE-D5	CB-D2.2	WQ-10	22.40	CIRCULAR	1.5	0.013	-1.03	759.23	759.00
LINE-D6	CB-D2.1	CB-D2.2	32.00	CIRCULAR	1.5	0.013	-3.19	760.25	759.23
LINE-D7	CB-D3	CB-D2.1	126.10	CIRCULAR	1.5	0.013	-1.70	762.39	760.25
LAT-D1.1	T-D4	MH-D1	45.70	CIRCULAR	1.5	0.013	-2.49	760.00	758.86
LAT-D1.2	WQ-11	T-D4	12.00	CIRCULAR	1.5	0.013	-2.51	760.30	760.00
LAT-D1.3	CB-D1.2	WQ-11	9.20	CIRCULAR	1.5	0.013	-2.18	760.50	760.30
LAT-D1.4	CB-D1.1	CB-D1.2	32.20	CIRCULAR	1.5	0.013	-2.18	761.20	760.00

LINK CONFIGURATION - LINK E									
LINK ID	U/S NODE	D/S NODE	LENGTH	SHAPE	DIAMETER	n VALUE	SLOPE	U/S INVERT	D/S INVERT
			[FT]		[FT]		[%]	[FT]	[FT]
LINE-E1	MH-E1	OUTFALL E	6.50	CIRCULAR	2	0.013	-8.00	759.13	758.61
LINE-E2	MH-E2	MH-E1	30.50	CIRCULAR	2	0.013	-13.11	768.00	764.00
LINE-E3	WQ-12	MH-E2	79.05	CIRCULAR	1.5	0.013	-3.81	774.41	771.40
LINE-E4	MH-E3	WQ-12	5.40	CIRCULAR	1.5	0.013	-0.56	774.44	774.41
LINE-E5	CB-E4	MH-E3	47.70	CIRCULAR	1.5	0.013	-0.52	774.69	774.44
LINE-E6	T-71	CB-E4	66.46	CIRCULAR	1.5	0.013	-0.92	775.30	774.69
LINE-E7	T-64	T-71	74.80	CIRCULAR	1.5	0.013	-0.92	775.99	775.30
LINE-E8	CB-E3	T-64	5.50	CIRCULAR	1.5	0.013	-0.91	776.04	775.99
LAT-E1	CB-E2	MH-E2	39.2	CIRCULAR	1.5	0.013	-0.99	774.11	773.72
LAT-E2	CB-E1	MH-E2	51.1	CIRCULAR	1.5	0.013	-5.95	774.04	771.00
LAT-E3	CB-E5	MH-E3	33.4	CIRCULAR	1.5	0.013	-0.51	777.55	777.38

WYOMING SPRINGS
SEGMENT 1
ROUND ROCK, TX

ROUND ROCK TEXAS

halff
13620 BRANTWICK DR
BLDG C, STE 100
AUSTIN, TX 78729
(512) 777-4600
TBPELS FIRM #312

Revision No.	Date	Description

F-312 8/14/23
STATE OF TEXAS
JEFFREY L. NAGY
133255
LICENSED PROFESSIONAL ENGINEER

100% SUBMITTAL

Project No.:	36179.002
Issued:	8/24/2023
Drawn By:	SG
Checked By:	JN
Scale:	N.T.S

Sheet Title
DRAINAGE CALCULATIONS (4 OF 12)

193
Sheet Number

8/24/2023 11:23:15 AM ak1914 H:\LP
Xref: 36179-2079
Xref: 36179-002 STRM-CALCS-Xp
JEFFREY L. NAGY 133255 8/14/23 ENGINEER

WYOMING SPRINGS - 25-YR LINK HYDRAULICS

25-YR LINK HYDRAULICS - LINE A

LINK	U/S NODE	D/S NODE	HGL U/S	HGL D/S	DISCHARGE	CAPACITY	FRICTION SLOPE	U/S JUNCTION LOSS	UPSTREAM VELOCITY	UPSTREAM DEPTH	DOWNSTREAM VELOCITY	DOWNSTREAM DEPTH
			[FT]	[FT]	[CFS]	[CFS]	[%]	[FT]	[FPS]	[FT]	[FPS]	[FT]
LINE-A1	T-73	CB-E4	777.69	776.73	3.27	37.13	10.28	1.14	4.13	0.69	2.32	1.11
LINE-A2	T-72	T-73	776.63	776.67	3.27	32.59	0.10	0.01	2.59	1.01	1.85	1.95
LINE-A3	OUTFALL A1	MH-A1	753.88	753.94	22.34	32.53	1.00	0.12	7.91	1.69	7.11	2.00
LINE-A4	MH-A2	MH-A1	767.33	756.01	16.31	46.76	3.66	9.16	6.66	1.46	13.55	0.82
LINE-A5	MH-A2	MH-A3	772.46	768.11	16.45	42.76	3.22	4.62	6.68	1.46	5.24	2.24
LINE-A6	WQ-2	MH-A2	780.28	773.24	7.68	21.81	4.06	7.25	5.67	1.07	4.35	1.74
LINE-A7	T-68	WQ-2	781.06	780.98	7.69	15.99	0.53	0.09	4.41	1.44	4.35	1.77
LINE-A6	T-69	T-68	781.37	781.31	7.70	15.78	0.52	0.09	4.63	1.34	4.36	1.69
LAT-A1.1	T-66	MH-A3	774.63	773.24	9.07	18.12	2.38	1.57	6.16	1.16	5.13	1.74
LAT-A1.2	WQ-1	T-66	775.50	775.31	9.10	13.65	0.75	0.20	5.15	1.60	5.15	1.85
LAT-A1.3	CB-A5	WQ-1	778.16	775.89	9.19	16.03	1.85	2.45	6.20	1.17	5.20	1.99
LAT-A1.4	CB-A6	CB-A5	780.20	779.20	5.51	7.38	0.27	1.01	3.24	1.38	3.12	2.21
LAT-A2-1	T-A3	MH-A1	758.14	753.17	6.76	33.34	5.38	2.37	5.36	1.01	14.00	0.48
LAT-A2.2	WQ-3	T-A3	758.66	758.76	6.76	35.79	2.65	0.12	5.36	1.01	3.83	1.63
LAT-A2.3	CB-A1	WQ-3	759.36	759.31	6.78	7.43	0.42	0.05	3.84	1.65	3.84	1.66
LAT-A2.4	CB-A3	CB-A1	765.51	759.74	3.91	19.71	3.00	5.99	4.38	0.76	2.22	2.03
LAT-A3.1	WQ-4	OUTFALL A2	757.90	755.75	5.27	32.80	8.39	2.38	4.86	0.88	2.98	1.50
LAT-A3.2	CB-A2	WQ-4	759.13	758.49	5.27	35.95	8.29	0.87	4.86	0.88	3.00	1.47

25-YR LINK HYDRAULICS - LINE B

LINK	U/S NODE	D/S NODE	HGL U/S	HGL D/S	DISCHARGE	CAPACITY	FRICTION SLOPE	U/S JUNCTION LOSS	UPSTREAM VELOCITY	UPSTREAM DEPTH	DOWNSTREAM VELOCITY	DOWNSTREAM DEPTH
			[FT]	[FT]	[CFS]	[CFS]	[%]	[FT]	[FPS]	[FT]	[FPS]	[FT]
LINE-B1	CB-A4	T-69	781.67	781.68	7.72	15.90	0.52	0.10	5.08	1.20	4.37	1.65
LINE-B2	CB-A7	CB-A4	789.95	782.37	4.40	15.47	1.95	7.81	4.56	0.80	2.49	1.90
LINE-B3	T-59	CB-A7	753.46	753.62	7.76	22.47	0.78	0.04	5.70	1.08	4.39	1.50
LINE-B4	MH-B1	T-59	756.54	754.11	7.79	21.03	3.44	2.64	5.71	1.08	4.41	1.73
LINE-B5	T-60	MH-C3	757.57	757.19	7.86	7.54	0.56	0.38	4.45	1.76	4.45	1.73
LINE-B6	WQ-7	T-60	757.87	757.81	7.87	7.10	0.56	0.06	4.45	2.01	4.45	2.00
LAT-B1.1	T-B2	OUTFALL B1	753.17	753.24	6.70	25.99	0.38	0.01	4.46	1.19	3.79	1.50
LAT-B1.2	WQ-5	T-B2	753.42	753.52	6.70	25.68	1.69	0.12	5.34	1.00	3.79	1.54
LAT-B1.3	CB-B1.1	WQ-5	753.99	754.07	6.71	19.56	0.40	0.05	4.83	1.10	3.80	1.65
LAT-B1.4	CB-B1.2	CB-B1.1	754.67	754.61	4.56	19.66	1.06	0.29	4.61	0.82	2.58	1.72
LAT-B1.5	CB-B1.3	CB-B1.2	757.46	755.26	3.54	19.62	2.91	2.41	4.24	0.72	2.05	1.41
LAT-B2.1	T-61	OUTFALL B3	755.21	755.25	8.78	42.16	0.15	0.02	3.38	1.54	2.80	2.00
LAT-B2.2	WQ-6	T-61	755.56	755.39	8.80	42.23	1.86	0.44	5.22	1.06	3.06	1.72
LAT-B2.3	CB-B2.1	WQ-6	756.26	756.25	8.81	16.86	0.14	0.02	3.11	1.69	3.02	1.75
LAT-B2.4	CB-B2.2	CB-B2.1	756.37	756.3	6.22	7.44	0.37	0.09	4.20	1.17	4.01	1.23
LAT-B2.5	CB-B2.3	CB-B2.2	756.87	756.83	4.12	9.79	0.15	0.04	2.36	1.44	2.33	1.63

25-YR LINK HYDRAULICS - LINE C

LINK	U/S NODE	D/S NODE	HGL U/S	HGL D/S	DISCHARGE	CAPACITY	FRICTION SLOPE	U/S JUNCTION LOSS	UPSTREAM VELOCITY	UPSTREAM DEPTH	DOWNSTREAM VELOCITY	DOWNSTREAM DEPTH
			[FT]	[FT]	[CFS]	[CFS]	[%]	[FT]	[FPS]	[FT]	[FPS]	[FT]
LINE-C1	MH-123	T-74	741.32	741.34	3.94	9.96	0.20	0.06	3.42	0.93	2.56	1.22
LINE-C2	CB-BCRT	MH-123	748.76	745.87	3.94	36.37	4.93	1.03	4.39	0.76	11.80	0.37
LINE-C3	MH-C2	CB-BCRT	738.47	735.92	21.95	49.21	1.22	2.93	6.65	1.59	4.47	2.50
LINE-C4	MH-C3	MH-C2	741.14	738.52	22.03	38.35	1.91	1.38	7.83	1.68	11.86	1.14
LINE-C5	T-C6	MH-C3	755.45	749.60	12.32	68.79	4.74	2.66	5.90	1.26	15.50	0.60
LINE-C6	WQ-8	T-C6	756.15	756.25	12.32	68.28	0.28	0.01	4.70	1.55	3.92	2.06
LINE-C7	WQ-8	WQ-8	756.57	756.59	12.33	37.35	0.27	0.02	4.29	1.72	3.93	1.99
LAT-C1.1	T-C2	MH-C3	753.39	749.59	11.29	79.08	4.02	1.05	5.70	1.21	14.47	0.59
LAT-C1.2	WQ-9	T-C2	755.81	754.15	11.30	75.68	9.05	1.96	5.71	1.21	3.61	1.97
LAT-C1.3	CB-C1.1	WQ-9	756.59	756.61	11.34	25.99	0.24	0.08	4.36	1.54	3.61	2.01
LAT-C1.4	CB-C1.2	CB-C1.1	757.05	756.97	6.27	7.38	0.31	0.09	3.74	1.35	3.63	1.42

25-YR LINK HYDRAULICS - LINE D

LINK	U/S NODE	D/S NODE	HGL U/S	HGL D/S	DISCHARGE	CAPACITY	FRICTION SLOPE	U/S JUNCTION LOSS	UPSTREAM VELOCITY	UPSTREAM DEPTH	DOWNSTREAM VELOCITY	DOWNSTREAM DEPTH
			[FT]	[FT]	[CFS]	[CFS]	[%]	[FT]	[FPS]	[FT]	[FPS]	[FT]
LINE-D1	T-62	OUTFALL D	756.39	756.39	13.84	33.70	0.35	0.02	4.50	1.89	4.40	2.00
LINE-D2	MH-D1	T-62	758.59	756.66	13.89	45.28	3.25	2.23	6.19	1.34	4.42	2.16
LINE-D3	T-D2	MH-D1	761.04	758.99	7.28	19.20	3.26	2.18	5.54	1.05	4.66	1.24
LINE-D4	WQ-11	T-D2	761.71	761.72	7.29	27.18	0.47	0.03	4.43	1.32	4.12	1.73
LINE-D5	CB-D2.2	WQ-11	762.10	762.04	7.30	18.11	1.23	0.28	5.54	1.05	4.13	1.65
LINE-D6	CB-D2.1	CB-D2.2	763.02	762.97	4.15	7.09	0.16	0.05	2.35	1.82	2.35	1.91
LINE-D7	CB-D3	CB-D2.1	763.19	763.17	3.87	9.72	0.04	0.05	1.71	0.91	1.08	1.97
LAT-D1.1	T-D4	MH-D1	753.88	761.44	6.71	9.32	0.77	0.35	5.35	1.00	5.74	0.94
LAT-D1.2	WQ-12	T-D4	767.33	762.48	6.73	11.16	0.41	0.05	3.81	1.53	3.81	1.62
LAT-D1.3	CB-D1.2	WQ-12	772.46	762.74	6.74	6.48	0.41	0.04	3.81	1.75	3.81	1.75
LAT-D1.4	CB-D1.1	CB-D1.2	780.28	763.18	3.29	7.64	0.10	0.03	1.86	2.01	1.86	2.15

25-YR LINK HYDRAULICS - LINE E

LINK	U/S NODE	D/S NODE	HGL U/S	HGL D/S	DISCHARGE	CAPACITY	FRICTION SLOPE	U/S JUNCTION LOSS	UPSTREAM VELOCITY	UPSTREAM DEPTH	DOWNSTREAM VELOCITY	DOWNSTREAM DEPTH
			[FT]	[FT]	[CFS]	[CFS]	[%]	[FT]	[FPS]	[FT]	[FPS]	[FT]
LINE-E1	MH-E1	OUTFALL E	760.33	760.61	11.10	68.38	0.36	0.02	5.67	1.20	3.53	2.00
LINE-E2	MH-E2	MH-E1	769.20	764.56	11.11	81.92	4.79	1.46	5.67	1.20	15.37	0.56
LINE-E3	WQ-12	MH-E2	775.58	772.14	9.10	18.69	2.43	2.31	6.17	1.17	10.51	0.74
LINE-E4	MH-E3	WQ-12	776.37	776.33	9.11	7.80	0.75	0.04	5.16	1.93	5.16	1.92
LINE-E5	CB-E4	MH-E3	777.11	776.89	6.87	7.36	0.43	0.22	3.89	2.42	3.89	2.45
LINE-E6	T-71	CB-E4	777.65	777.56	3.81	11.10	0.13	0.09	2.16	2.19	2.16	2.87
LINE-E7	T-64	T-71	777.77	777.71	3.87	11.10	0.14	0.06	2.19	1.80	2.19	2.25
LINE-E8	CB-E3	T-64	777.79	777.79	3.87	11.53	0.14	0.01	2.19	1.75	2.19	1.82
LAT-E1	CB-E2	MH-E2	774.47	774.02	0.93	10.48	0.94	0.37	2.86	0.36	0.30	0.30
LAT-E2	CB-E1	MH-E2	774.46	771.23	1.25	25.61	4.91	2.51	3.10	0.42	0.23	0.23
LAT-E3	CB-E5	MH-E3	778.14	777.97	2.42	7.49	0.51	0.17	3.76	0.59	0.59	0.59

WYOMING SPRINGS
SEGMENT 1
ROUND ROCK, TX

ROUND ROCK TEXAS

halff
13620 BRANTWICK DR
BLDG C, STE 100
AUSTIN, TX 78729
(512) 777-4600
TBPELS FIRM #312

Revision No.	Date	Description

F-312 8/14/23
STATE OF TEXAS
JEFFREY L. NAGY
133255
LICENSED PROFESSIONAL ENGINEER

100% SUBMITTAL

Project No.:	36179.002
Issued:	6/24/2023
Drawn By:	SG
Checked By:	JN
Scale:	N.T.S

Sheet Title
DRAINAGE CALCULATIONS (5 OF 12)

194
Sheet Number

USER:jnagy
DATE:8/24/2023
FILE:C:\Users\jnagy\Halff Associates Inc\Halff Team Site - Documents\Projects\36179.002 ERM\Civil\C3d\Sheets\WYOMING SPRINGS_DRAINAGE CALCULATIONS.dwg
XREF:
PLOTSTYLE:HALFF.ctb
LAYOUT:
8/24/2023 11:23:05 AM

WYOMING SPRINGS - 100-YR LINK HYDRAULICS

100-YR LINK HYDRAULICS - LINE A

LINK	U/S NODE	D/S NODE	HGL U/S	HGL D/S	DISCHARGE	CAPACITY	FRICTION SLOPE	U/S JUNCTION LOSS	UPSTREAM VELOCITY	UPSTREAM DEPTH	DOWNSTREAM VELOCITY	DOWNSTREAM DEPTH
			[FT]	[FT]	[CFS]	[CFS]	[%]	[FT]	[FPS]	[FT]	[FPS]	[FT]
LAT-E2.1	T-73	CB-E4	777.77	777.79	4.05	37.13	1.85	0.20	4.43	0.77	2.29	2.17
LAT-E2.2	T-72	T-73	777.72	777.71	4.05	32.59	0.15	0.01	2.29	2.10	2.29	2.99
LINE-A1	OUTFALL A1	MH-A1	755.14	754.94	29.39	32.53	1.69	0.20	9.35	2.95	9.35	3.00
LINE-A2	MH-A2	MH-A1	767.51	756.12	20.82	46.76	3.61	9.03	7.57	1.64	14.45	0.93
LINE-A3	MH-A2	MH-A3	772.64	768.33	20.98	42.76	3.15	4.52	7.61	1.64	6.68	2.46
LINE-A4	WQ-2	MH-A2	780.43	773.46	10.01	21.81	3.99	7.13	6.51	1.22	5.66	1.96
LINE-A5	T-68	WQ-2	781.38	781.22	10.03	15.99	0.91	0.16	5.68	1.76	5.68	2.01
LINE-A6	T-69	T-68	781.94	781.78	10.05	15.78	0.92	0.17	5.69	1.91	5.69	2.16
LAT-A1.1	T-66	MH-A3	774.75	773.46	11.44	18.12	2.15	1.41	7.07	1.29	6.47	1.96
LAT-A1.2	WQ-1	T-66	775.83	775.52	11.47	13.65	1.19	0.31	6.49	1.93	6.49	2.06
LAT-A1.3	CB-A5	WQ-1	778.29	776.44	11.58	16.03	1.49	1.97	7.13	1.30	6.55	2.54
LAT-A1.4	CB-A6	CB-A5	781.18	779.63	6.79	7.38	0.42	1.55	3.84	2.36	3.84	2.64
LAT-A2-1	T-A3	MH-A1	758.33	753.28	9.62	33.34	5.01	2.21	6.36	1.20	14.94	0.59
LAT-A2.2	WQ-3	T-A3	759.03	759.03	9.62	35.79	0.83	0.04	5.65	1.38	5.45	1.90
LAT-A2.3	CB-A1	WQ-3	759.64	759.54	9.64	7.43	0.84	0.10	5.45	1.93	5.45	1.89
LAT-A2.4	CB-A3	CB-A1	765.64	760.42	5.28	19.71	2.72	5.44	4.86	0.89	2.99	2.71
LAT-A3.1	WQ-4	OUTFALL A2	758.03	757.04	6.82	32.80	4.26	1.21	5.38	1.01	3.86	2.79
LAT-A3.2	CB-A2	WQ-4	759.26	758.69	6.83	35.95	7.54	0.79	5.39	1.01	3.86	1.67

100-YR LINK HYDRAULICS - LINE B

LINK	U/S NODE	D/S NODE	HGL U/S	HGL D/S	DISCHARGE	CAPACITY	FRICTION SLOPE	U/S JUNCTION LOSS	UPSTREAM VELOCITY	UPSTREAM DEPTH	DOWNSTREAM VELOCITY	DOWNSTREAM DEPTH
			[FT]	[FT]	[CFS]	[CFS]	[%]	[FT]	[FPS]	[FT]	[FPS]	[FT]
LINE-A7	CB-A4	T-69	782.52	782.34	10.08	15.90	0.92	0.79	5.70	0.77	5.70	2.17
LINE-A8	CB-A7	CB-A4	790.06	783.37	5.59	15.47	1.73	0.10	4.97	2.10	3.16	2.99
LINE-B1	T-59	CB-A7	753.59	753.62	9.85	22.47	2.35	0.08	6.44	2.95	5.57	3.00
LINE-B2	MH-B1	T-59	756.67	754.30	9.88	21.03	3.30	0.08	6.46	1.64	5.59	0.93
LINE-B3	T-60	MH-C3	757.99	757.38	9.96	7.54	0.90	1.67	5.63	1.64	5.63	2.46
LINE-B4	WQ-7	T-60	758.48	758.38	9.97	7.10	0.90	2.86	5.64	1.22	5.64	1.96
LAT-B1.1	T-B2	OUTFALL B1	753.23	753.24	10.52	25.99	3.42	0.13	6.70	1.25	5.95	1.50
LAT-B1.2	WQ-5	T-B2	754.03	753.96	10.53	25.68	1.01	0.07	5.96	1.61	5.96	1.98
LAT-B1.3	CB-B1.1	WQ-5	754.69	754.56	10.55	19.56	1.01	0.14	5.97	1.80	5.97	2.14
LAT-B1.4	CB-B1.2	CB-B1.1	755.69	755.58	6.49	19.66	0.38	0.10	3.67	1.84	3.67	2.69
LAT-B1.5	CB-B1.3	CB-B1.2	757.55	756.00	4.50	19.62	2.15	1.78	4.59	0.81	2.55	2.15
LAT-B2.1	T-61	OUTFALL B3	755.13	754.35	16.46	42.16	1.19	0.14	6.68	1.46	9.25	1.10
LAT-B2.2	WQ-6	T-61	755.96	756.01	16.48	42.23	0.94	0.22	6.69	1.46	5.25	2.34
LAT-B2.3	CB-B2.1	WQ-6	756.97	756.90	16.51	16.86	0.53	0.07	5.25	2.40	5.25	2.40
LAT-B2.4	CB-B2.2	CB-B2.1	757.35	756.97	12.83	7.44	1.49	0.39	7.26	2.15	7.26	1.90
LAT-B2.5	CB-B2.3	CB-B2.2	758.89	758.81	6.01	9.79	0.33	0.09	3.40	3.46	3.40	3.61

100-YR LINK HYDRAULICS - LINE C

LINK	U/S NODE	D/S NODE	HGL U/S	HGL D/S	DISCHARGE	CAPACITY	FRICTION SLOPE	U/S JUNCTION LOSS	UPSTREAM VELOCITY	UPSTREAM DEPTH	DOWNSTREAM VELOCITY	DOWNSTREAM DEPTH
			[FT]	[FT]	[CFS]	[CFS]	[%]	[FT]	[FPS]	[FT]	[FPS]	[FT]
LINE-BCRT	MH-123	T-74	747.08	746.97	6.32	9.96	0.36	0.11	3.57	6.69	3.57	6.85
LINE-BCRT	CB-BCRT	MH-123	748.97	747.24	6.32	36.37	9.39	1.96	5.22	0.97	3.58	1.74
LINE-C1	MH-C2	CB-BCRT	750.78	749.39	31.21	49.21	0.58	1.39	6.36	13.90	6.36	15.97
LINE-C2	MH-C3	MH-C2	751.57	750.18	31.35	38.35	1.92	1.39	9.98	12.11	9.98	12.80
LINE-C3	T-C6	MH-C3	755.70	753.55	17.64	68.79	4.29	2.41	6.92	1.51	5.62	4.55
LINE-C4	WQ-8	T-C6	756.63	756.60	17.65	68.28	0.61	0.03	5.62	2.03	5.62	2.41
LINE-C5	WQ-8	WQ-8	757.15	757.09	17.67	37.35	0.61	0.06	5.62	2.30	5.62	2.49
LAT-C1.1	T-C2	MH-C3	753.63	753.55	16.06	79.08	1.34	0.35	6.61	1.45	5.11	4.55
LAT-C1.2	WQ-9	T-C2	756.05	754.49	16.07	75.68	8.44	1.82	6.61	1.45	5.12	2.31
LAT-C1.3	CB-C1.1	WQ-9	757.15	756.97	16.15	25.99	0.51	0.17	5.14	2.10	5.14	2.37
LAT-C1.4	CB-C1.2	CB-C1.1	757.73	757.46	9.87	7.38	0.88	0.27	5.58	2.03	5.58	1.91

100-YR LINK HYDRAULICS - LINE D

LINK	U/S NODE	D/S NODE	HGL U/S	HGL D/S	DISCHARGE	CAPACITY	FRICTION SLOPE	U/S JUNCTION LOSS	UPSTREAM VELOCITY	UPSTREAM DEPTH	DOWNSTREAM VELOCITY	DOWNSTREAM DEPTH
			[FT]	[FT]	[CFS]	[CFS]	[%]	[FT]	[FPS]	[FT]	[FPS]	[FT]
LINE-D1	CB-C2.2	CB-C2.1	764.21	764.13	10.89	22.62	0.23	0.06	3.47	2.89	3.47	3.09
LINE-D2	CB-C2.2	CB-C2.2	760.61	759.66	6.00	10.40	0.33	0.35	3.39	1.89	3.39	2.58
LINE-D3	T-62	CB-C2.2	769.48	764.73	20.72	33.70	1.04	0.05	7.72	1.66	8.70	1.47
LINE-D4	MH-D1	T-62	775.33	771.75	20.79	45.28	2.88	1.98	7.74	1.66	6.87	2.63
LINE-D5	T-D2	MH-D1	777.03	776.44	11.64	13.82	1.55	1.04	7.40	1.32	8.73	1.11
LINE-D6	WQ-10	T-D2	778.11	778.05	11.65	12.93	1.35	0.08	6.90	2.26	6.90	2.27
LINE-D7	CB-D2.2	WQ-10	777.91	777.71	11.68	10.64	1.36	0.30	6.92	3.03	6.92	2.96
LAT-D1.1	T-D4	MH-D1	761.20	759.72	9.59	16.59	1.73	0.79	6.35	1.20	9.20	0.86
LAT-D1.2	WQ-11	T-D4	762.00	761.90	9.60	16.63	0.84	0.10	5.43	1.70	5.43	1.90
LAT-D1.3	CB-D1.2	WQ-11	762.51	762.43	9.61	15.50	0.84	0.08	5.44	2.01	5.44	2.13
LAT-D1.4	CB-D1.1	CB-D1.2	763.36	763.28	5.34	15.50	0.26	0.08	3.02	2.16	3.02	2.78

100-YR LINK HYDRAULICS - LINE E

LINK	U/S NODE	D/S NODE	HGL U/S	HGL D/S	DISCHARGE	CAPACITY	FRICTION SLOPE	U/S JUNCTION LOSS	UPSTREAM VELOCITY	UPSTREAM DEPTH	DOWNSTREAM VELOCITY	DOWNSTREAM DEPTH
			[FT]	[FT]	[CFS]	[CFS]	[%]	[FT]	[FPS]	[FT]	[FPS]	[FT]
LINE-E1	MH-E1	OUTFALL E	760.57	759.63	16.03	68.38	1.37	0.08	6.60	1.44	4.17	1.02
LINE-E2	MH-E2	MH-E1	769.44	764.70	16.05	81.92	4.27	1.30	6.60	1.44	8.94	0.70
LINE-E3	WQ-12	MH-E2	775.75	772.31	12.55	18.69	2.49	2.37	7.55	1.34	4.12	0.91
LINE-E4	MH-E3	WQ-12	776.77	776.69	12.55	7.80	1.43	0.08	7.10	2.33	9.97	2.28
LINE-E5	CB-E4	MH-E3	778.26	777.85	9.47	7.36	0.81	0.41	5.36	3.57	16.28	3.41
LINE-E6	T-71	CB-E4	779.31	779.12	5.52	11.10	0.28	0.19	3.12	3.85	11.22	4.43
LINE-E7	T-64	T-71	779.55	779.42	5.57	11.10	0.28	0.13	3.15	3.58	7.10	3.96
LINE-E8	CB-E3	T-64	779.60	779.58	5.58	11.53	0.28	0.02	3.16	3.56	5.36	3.61
LAT-E1	CB-E2	MH-E2	774.56	774.1	1.45	10.48	0.91	0.36	3.24	0.45	4.17	0.38
LAT-E2	CB-E1	MH-E2	774.61	771.3	2.26	25.61	4.45	2.28	3.69	0.57	8.94	0.3
LAT-E3	CB-E5	MH-E3	778.24	778.07	3.24	7.49	0.88	0.29	4.09	0.69	4.12	0.69

WYOMING SPRINGS
SEGMENT 1
ROUND ROCK, TX

ROUND ROCK TEXAS

halff
13620 BRANTWICK DR
BLDG C, STE 100
AUSTIN, TX 78729
(512) 777-4600
TBPELS FIRM #312

Revision No.	Date	Description

F-312 8/14/23
STATE OF TEXAS
JEFFREY L NAGY
133255
LICENSED PROFESSIONAL ENGINEER

100% SUBMITTAL

Project No.:	36179.002
Issued:	8/24/2023
Drawn By:	SG
Checked By:	JN
Scale:	N.T.S

Sheet Title
DRAINAGE CALCULATIONS (6 OF 12)

195
Sheet Number

8/24/2023 11:21:58 AM ak1914 H:\LP
Date: 8/24/2023 Time: 11:21:58 AM User: ak1914 File: H:\LP\36179.002 STRM\CALCS\Halff\36179.002 STRM CALCS.dgn
JEFFREY L NAGY 133255 8/14/23 CARLSON, BRADFORD & TAYLOR, INC.

WYOMING SPRINGS - ON GRADE INLET CALCULATIONS

25-YR INLET CALCULATIONS - ON GRADE

ID	TYPE	DRAINAGE AREA	Qbasin	Qpass (To Inlet)	Qa	LONGTUDINAL ROADWAY SLOPE	a	y_0	PONDED WIDTH	INLET OPENING LENGTH, L_a	WIDTH	Qa/La	W	P_0	A_0	K_0	P_W	A_W	K_W	E_0	S_e	L_r	L_a/L_r	a/y_0	Q/Qa	Qcaptured	Qpass (to Bypass)	BYPASS TARGET NODE
			[CFS]	[CFS]	[CFS]	[%]	[FT]	[FT]	[FT]	[FT]	[FT]	[FT]	[FT]	[FT]	[FT]	[FT]	[FT]	[FT]	[FT]			[FT]				[CFS]	[CFS]	
CB-A1	CURB	A1	2.44	0.60	3.04	3.95	0.25	0.21	7.30	14.00	4.00	0.38	1.5	5.80	0.34	5.76	1.53	0.38	17.50	0.75	0.15	7.91	1.77	1.19	0.80	2.95	0.09	CB-B1.1
CB-A2	CURB	A2	6.58	0.85	7.43	3.95	0.25	0.28	10.60	14.00	4.00	0.28	1.5	9.10	0.83	19.15	1.53	0.48	25.64	0.57	0.12	26.14	0.54	0.89	0.89	5.29	2.15	CB-B2.1
CB-A3	CURB	A3	4.15	0.38	4.53	3.95	0.25	0.24	8.60	14.00	4.00	0.23	1.5	7.10	0.50	9.88	1.53	0.42	20.56	0.68	0.13	19.54	0.72	1.04	0.92	3.93	0.60	CB-A1
CB-A4	CURB	A4	3.72	0.26	3.98	3.95	0.25	0.23	8.20	14.00	4.00	0.22	1.5	6.70	0.45	8.46	1.53	0.41	19.59	0.70	0.14	18.19	0.77	1.09	0.93	3.60	0.38	CB-A3
CB-A5	CURB	A5	4.12	0.96	5.08	3.95	0.25	0.24	9.10	14.00	4.00	0.24	1.5	7.60	0.58	11.85	1.53	0.44	21.79	0.65	0.13	20.94	0.67	1.04	0.81	4.22	0.85	CB-A2
CB-A6	CURB	A6	6.49	0.00	6.49	1.60	0.25	0.30	12.00	14.00	4.00	0.33	1.5	10.50	1.10	28.05	1.53	0.53	29.47	0.51	0.11	19.88	0.70	0.83	1.00	5.52	0.96	CB-A5
CB-A7	CURB	A7	4.66	0.00	4.66	1.60	0.25	0.27	10.50	14.00	4.00	0.29	1.5	9.00	0.81	18.59	1.53	0.48	25.38	0.58	0.12	16.32	0.86	0.93	1.00	4.40	0.26	CB-A4
CB-B1.2	CURB	CB-B1.2	0.85	0.19	1.04	2.89	0.25	0.16	4.80	14.00	4.00	0.13	1.5	3.30	0.11	1.28	1.53	0.31	12.18	0.90	0.17	8.24	1.70	1.56	0.82	1.04	0.00	CB-B1.1
CB-B1.3	CURB	CB-B1.3	3.73	0.00	3.73	2.89	0.25	0.23	8.50	14.00	4.00	0.23	1.5	7.00	0.49	9.51	1.53	0.42	20.31	0.68	0.13	16.33	0.86	1.09	1.00	3.54	0.19	CB-B1.2
CB-B2.1	CURB	CB-B2.1	1.91	2.15	4.06	3.95	0.25	0.23	8.20	9.50	4.00	0.22	1.5	6.70	0.45	8.46	1.53	0.41	19.59	0.70	0.14	18.34	0.52	1.09	0.47	2.84	1.21	CB-B2.2
CB-B2.3	CURB	CB-B2.3	1.65	2.57	4.22	2.89	0.25	0.25	9.30	14.00	4.00	0.24	1.5	7.80	0.61	12.70	1.53	0.44	22.29	0.64	0.13	17.79	0.79	1.00	0.39	4.11	0.49	CB-B2.2
CB-B3	CURB	B3	5.77	0.59	6.36	2.89	0.25	0.28	10.60	9.50	4.00	0.29	1.5	9.10	0.83	19.15	1.53	0.48	25.64	0.57	0.12	22.29	0.43	0.89	0.91	3.81	2.57	CB-B2.3
CB-B4	CURB	B4	4.85	0.00	4.85	2.89	0.25	0.25	9.50	14.00	4.00	0.26	1.5	8.00	0.64	13.58	1.53	0.45	22.79	0.63	0.12	19.02	0.74	1.00	1.00	4.26	0.59	CB-B3
CB-C1.1	CURB	C1.1	6.40	0.00	6.40	1.08	0.25	0.32	12.90	14.00	4.00	0.35	1.5	11.40	1.30	34.93	1.53	0.55	32.03	0.48	0.10	18.16	0.77	0.78	1.00	5.73	0.67	CB-C1.2
CB-C2.1	CURB	C2.1	6.23	0.00	6.23	1.08	0.25	0.32	12.80	14.00	4.00	0.35	1.5	11.30	1.28	34.12	1.53	0.55	31.75	0.48	0.10	17.89	0.78	0.78	1.00	2.91	0.60	CB-C2.2
CB-C3	CURB	C3	4.34	0.00	4.34	2.20	0.25	0.26	9.60	14.00	4.00	0.26	1.5	8.10	0.66	14.04	1.53	0.45	23.04	0.62	0.12	16.79	0.83	0.96	1.00	4.06	0.29	CB-C1.2
CB-C4	CURB	C4	5.39	0.00	5.39	2.20	0.25	0.27	10.50	14.00	4.00	0.28	1.5	9.00	0.81	18.59	1.53	0.48	25.38	0.58	0.12	19.08	0.73	0.93	1.00	4.71	0.68	CB-C2.2
CB-D1.2	CURB	D1.2	4.04	0.00	4.04	3.94	0.25	0.23	8.20	14.00	4.00	0.22	1.5	6.70	0.45	8.46	1.53	0.41	19.59	0.70	0.14	18.29	0.77	1.09	1.00	3.64	0.40	CB-D1.1
CB-D2.2	CURB	D2.2	3.49	0.00	3.49	3.94	0.25	0.22	7.70	14.00	4.00	0.21	1.5	6.20	0.38	6.88	1.53	0.40	18.42	0.73	0.14	16.84	0.83	1.14	1.00	3.28	0.21	CB-D2.1
CB-D3	CURB	D3	1.93	0.00	1.93	1.77	0.25	0.21	7.10	9.50	4.00	0.19	1.5	5.60	0.31	5.25	1.53	0.38	17.04	0.76	0.15	10.07	0.94	1.19	1.00	1.90	0.03	CB-D2.1
CB-E1	CURB	E1	1.05	0.20	1.25	3.94	0.25	0.16	4.90	14.00	4.00	0.13	1.5	3.40	0.12	1.39	1.53	0.31	12.38	0.90	0.17	9.80	1.43	1.56	0.84	1.25	0.00	CB-D1.2
CB-E2	CURB	E2	0.93	0.00	0.93	3.94	0.25	0.15	4.20	14.00	4.00	0.11	1.5	2.70	0.07	0.75	1.53	0.29	11.02	0.94	0.18	8.47	1.65	1.67	1.00	0.93	0.00	CB-D2.2
CB-E4	CURB	E4	3.47	0.00	3.47	3.94	0.25	0.22	7.70	14.00	4.00	0.21	1.5	6.20	0.38	6.88	1.53	0.40	18.42	0.73	0.14	16.80	0.83	1.14	1.00	3.27	0.20	CB-E1
CB-E5	CURB	E5	2.42	0.00	2.42	3.94	0.25	0.2	6.60	14.00	4.00	0.18	1.5	5.10	0.26	4.09	1.53	0.36	15.93	0.80	0.15	13.79	1.02	1.25	1.00	2.42	0.00	CB-E2

a	Gutter depression depth
y_0	Ponding Depth at inlet depression
W	Depression width for an on grade curb inlet
P_0	Wetted perimeter of the depressed gutter section
A_0	Area of gutter/road section beyond the depression width
E_0	Ratio of depression flow to total flow
K_0	Conveyance of the guter section beyond the depression
K_W	Conveyance of cross section
A_W	Area of depressed gutter section
P_W	Wetted perimeter of depressed gutter section
S_e	Equivalent cross slope
L_a	Design length of the curb opening inlet
L_r	Length of curb opening inlet required to intercept the total flow
L_a/L_r	Ratio of design length to length required for total interception
Q/Qa	Ratio of Intercepted discharge to total Discharge
a/y_0	Ratio of inlet depression to ponding depth at inlet depression

100-YR INLET CALCULATIONS - ON GRADE

ID	TYPE	DRAINAGE AREA	Qbasin	Qpass (To Inlet)	Qa	LONGTUDINAL ROADWAY SLOPE	a	y_0	PONDED WIDTH	INLET OPENING LENGTH, L_a	WIDTH	Qa/La	W	P_0	A_0	K_0	P_W	A_W	K_W	E_0	S_e	L_r	L_a/L_r	a/y_0	Q/Qa	Qcaptured	Qpass (to Bypass)	BYPASS TARGET NODE
			[CFS]	[CFS]	[CFS]	[%]	[FT]	[FT]	[FT]	[FT]	[FT]	[FT]	[FT]	[FT]	[SF]	[CFS]	[FT]	[SF]	[CFS]		[FT/FT]	[FT]				[CFS]	[CFS]	
CB-A1	CURB	A1	3.44	2.15	5.59	3.95	0.25	0.25	9.40	14.00	4.00	0.25	1.50	7.90	0.62	13.13	1.53	0.45	22.54	0.63	0.13	22.08	0.63	1.00	0.80	4.48	1.11	CB-B1.1
CB-A2	CURB	A2	9.44	2.61	12.05	3.95	0.25	0.32	12.80	14.00	4.00	0.35	1.50	11.30	1.28	34.12	1.53	0.55	31.75	0.48	0.10	34.83	0.40	0.78	0.57	6.85	5.21	CB-B2.1
CB-A3	CURB	A3	5.95	1.50	7.45	3.95	0.25	0.28	10.60	14.00	4.00	0.28	1.50	9.10	0.83	19.15	1.53	0.48	25.64	0.57	0.12	26.17	0.54	0.89	0.71	5.29	2.15	CB-A1
CB-A4	CURB	A4	5.29	1.02	6.31	3.95	0.25	0.26	9.90	14.00	4.00	0.27	1.50	8.40	0.71	15.47	1.53	0.46	23.81	0.61	0.12	23.72	0.59	0.96	0.76	4.82	1.50	CB-A3
CB-A5	CURB	A5	5.86	2.33	8.19	3.95	0.25	0.28	11.00	14.00	4.00	0.30	1.50	9.50	0.90	21.48	1.53	0.50	26.71	0.55	0.11	27.66	0.51	0.89	0.68	5.58	2.61	CB-A2
CB-A6	CURB	A6	9.14	0.00	9.14	1.60	0.25	0.34	13.70	14.00	4.00	0.37	1.50	12.20	1.49	41.85	1.53	0.58	34.39	0.45	0.10	24.41	0.57	0.74	0.75	6.81	2.33	CB-A5
CB-A7	CURB	A7	6.62	0.00	6.62	1.60	0.25	0.31	12.10	14.00	4.00	0.33	1.50	10.60	1.12	28.77	1.53	0.53	29.75	0.51	0.10	20.13	0.70	0.81	0.85	5.60	1.02	CB-A4
CB-B1.2	CURB	CB-B1.2	1.23	0.78	2.01	2.89	0.25	0.19	6.50	14.00	4.00	0.00	1.50	5.00	0.25	3.88	1.53	0.36	15.71	0.80	0.15	11.57	1.21	1.32	1.00	2.01	0.00	CB-B1.1
CB-B1.3	CURB	CB-B1.3	5.28	0.00	5.28	2.89	0.25	0.26	9.80	14.00	4.00	0.26	1.50	8.30	0.69	14.98	1.53	0.46	23.55	0.61	0.12	19.95	0.70	0.96	0.85	4.50	0.78	CB-B1.2
CB-B2.1	CURB	CB-B2.1	2.68	0.00	2.68	3.95	0.25	0.28	10.80	9.50	4.00	0.16	1.50	9.30	0.86	20.29	1.53	0.49	26.18	0.56	0.11	17.17	0.55	0.89	1.50	4.02	3.87	CB-B2.2
CB-B2.3	CURB	CB-B2.3	2.38	5.40	7.78	2.89	0.25	0.30	11.90	14.00	4.00	0.30	1.50	10.40	1.08	27.34	1.53	0.52	29.19	0.52	0.11	25.52	0.55	0.83	0.77	6.00	2.56	CB-B2.2
CB-B3	CURB	B3	8.47	1.71	10.18	2.89	0.25	0.32	12.80	9.50	4.00	0.34	1.50	11.30	1.28	34.12	1.53	0.55	31.75	0.48	0.10	29.54	0.32	0.78	0.47	4.81	5.40	CB-B2.3
CB-B4	CURB	B4	7.10	0.00	7.10	2.89	0.25	0.28	11.10	14.00	4.00	0.30	1.50	9.60	0.92	22.09	1.53	0.50	26.98	0.55	0.11	23.82	0.59	0.89	0.76	5.39	1.71	CB-B3
CB-C1.1	CURB	C1.1	9.10	0.00	9.10	1.08	0.25	0.36	14.80	14.00	4.00	0.41	1.50	13.30	1.77	52.68	1.53	0.61	37.74	0.42	0.09	22.46	0.62	0.69	0.79	7.19	1.91	CB-C1.2
CB-C2.1	CURB	C2.1	8.89	0.00	8.89	1.08	0.25	0.36	14.70	14.00	4.00	0.40	1.50	13.20	1.74	51.63	1.53	0.61	37.43	0.42	0.09	22.17	0.63	0.69	0.80	7.09	1.81	CB-C2.2
CB-C3	CURB	C3	6.29	0.00	6.29	2.20	0.25	0.29	11.10	14.00	4.00	0.30	1.50	9.60	0.92	22.09	1.53	0.50	26.98	0.55	0.11	20.86	0.67	0.86	0.83	5.21	1.09	CB-C1.2
CB-C4	CURB	C4	7.96	0.00	7.96	2.20	0.25	0.31	12.20	14.00	4.00	0.33	1.50	10.70	1.14	29.50	1.53	0.53	30.03	0.50	0.10	24.01	0.58	0.81	0.75	6.00	1.96	CB-C2.2
CB-D1.2	CURB	D1.2	5.74	0.00	5.74	3.94	0.25	0.25	9.50	14.00	4.00	0.26	1.50	8.00	0.64	13.58	1.53	0.45	22.79	0.63	0.12	22.40	0.63	1.00	0.79	4.55	1.18	CB-D1.1
CB-D2.2	CURB	D2.2	6.70	0.00	6.70	3.94	0.25	0.27	10.10	14.00	4.00	0.27	1.50	8.60	0.74	16.47	1.53	0.47	24.33	0.60	0.12	24.50	0.57	0.93	0.74	4.99	1.71	CB-D2.1
CB-D3	CURB	D3	2.79	0.00	2.79	1.77	0.25	0.23	8.40	9.50	4.00	0.22	1.50	6.90	0.48	9.16	1.53	0.42	20.07	0.69	0.13	12.42	0.76	1.09	0.90	2.52	0.28	CB-D2.1
CB-E1	CURB	E1	1.49	0.78	2.27	3.94	0.25	0.19	6.40	14.00	4.00	0.00	1.50	4.90	0.24	3.68	1.53	0.36	15.49	0.81	0.15	13.31	1.05	1.32	1.00	2.26	0.00	CB-D1.2
CB-E2	CURB	E2	1.26	0.20	1.46	3.94	0.25	0.17	5.20	14.00	4.00	0.00	1.50	3.70	0.14	1.74	1.53	0.32	12.98	0.88	0.17	10.56	1.33	1.47	0.99	1.45	0.00	CB-D2.2
CB-E4	CURB	E4	4.92	0.00	4.92	3.94	0.25	0.24	8.90	14.00	4.00	0.24	1.50	7.40	0.55	11.03	1.53	0.43	21.29	0.66	0.13	20.47	0.68	1.04	0.84	4.14	0.78	CB-E1
CB-E5	CURB	E5	3.44	0.00	3.44	3.94	0.25	0.22	7.70	14.00	4.00	0.21	1.50	6.20	0.38	6.88	1.53	0.40	18.42	0.73	0.14	16.74	0.84	1.14	0.94	3.24	0.20	CB-E2

WYOMING SPRINGS
SEGMENT 1
ROUND ROCK, TX

ROUND ROCK TEXAS

halff
13620 BRANTWICK DR
BLDG C, STE 100
AUSTIN, TX 78729
(512) 777-4600
TBPELS FIRM #312

Revision No.	Date	Description

STATE OF TEXAS
JEFFREY L NAGY
133255
LICENSED PROFESSIONAL ENGINEER
5/9/23

100% SUBMITTAL

Project No.:	36179.002
Issued:	5/9/2023
Drawn By:	SC
Checked By:	
Scale:	N.T.S

Sheet Title
DRAINAGE CALCULATIONS (7 OF 12)

196
Sheet Number

WYOMING SPRINGS - SAG INLET CALCULATIONS

25-YR INLET CALCULATIONS - IN SAG

						SLOPE				PONDED WIDTH													
ID	TYPE	DRAINAGE AREA	Qbasin	Qpass (To Inlet)	Qa	LEFT	RIGHT	a	y_0	LEFT	RIGHT	LENGTH, La	WIDTH	R.F.	Sx	y	W	Cw	L_r	L_a/L_r	a/y_0	Q/Qa	Qcaptured
			[CFS]	[CFS]	[CFS]	[%]	[%]	[FT]	[FT]	[FT]	[FT]	[FT]	[FT]	[%]	[FT/FT]	[FT]	[FT]		[FT]				[CFS]
CB-B1.1	CURB	B1.1	2.08	0.09	2.17	2.89	3.95	0.25	0.45	4.90	2.00	14.00	4.00	10.00	0.02	0.06	1.50	2.30	64.86	0.22	0.56	0.96	2.18
CB-B2.2	CURB	B2.2	0.54	1.70	2.24	3.95	2.89	0.25	0.46	2.16	5.04	14.00	4.00	10.00	0.02	0.06	1.50	2.30	60.04	0.23	0.54	0.24	2.28
CB-C1.2	CURB	C1.2	1.26	0.96	2.22	2.20	1.08	0.25	0.46	1.01	6.19	14.00	4.00	10.00	0.02	0.07	1.50	2.30	44.69	0.31	0.54	0.57	2.30
CB-C2.2	CURB	C2.2	1.25	1.28	2.53	1.08	2.20	0.25	0.48	7.22	1.18	14.00	4.00	10.00	0.02	0.07	1.50	2.30	58.59	0.24	0.52	0.49	2.91
CB-D1.1	CURB	D1.1	3.02	0.40	3.42	3.94	1.77	0.25	0.50	4.23	5.17	14.00	4.00	10.00	0.02	0.08	1.50	2.30	63.08	0.22	0.50	0.88	3.43
CB-D2.1	CURB	D2.1	2.09	0.24	2.33	1.77	3.94	0.25	0.46	4.67	2.63	14.00	4.00	10.00	0.02	0.06	1.50	2.30	66.95	0.21	0.54	0.90	2.33

100-YR INLET CALCULATIONS - IN SAG

						SLOPE				PONDED WIDTH													
ID	TYPE	DRAINAGE AREA	Qbasin	Qpass (To Inlet)	Qa	LEFT	RIGHT	a	y_0	LEFT	RIGHT	LENGTH, La	WIDTH	R.F.	Sx	y	W	Cw	L_r	L_a/L_r	a/y_0	Q/Qa	Qcaptured
			[CFS]	[CFS]	[CFS]	[%]	[%]	[FT]	[FT]	[FT]	[FT]	[FT]	[FT]	[%]	[FT/FT]	[FT]	[FT]		[FT]				[CFS]
CB-B1.1	CURB	B1.1	3.01	1.11	4.12	2.89	3.95	0.25	0.53	7.53	3.07	14.00	4.00	10.00	0.02	0.07	1.50	2.30	86.74	0.16	0.47	0.73	4.12
CB-B2.2	CURB	B2.2	0.77	6.43	7.20	3.95	2.89	0.25	0.63	4.71	10.99	14.00	4.00	10.00	0.02	0.10	1.50	2.30	101.87	0.14	0.40	0.11	7.38
CB-C1.2	CURB	C1.2	1.78	3.00	4.78	2.20	1.08	0.25	0.56	1.69	10.41	14.00	4.00	10.00	0.02	0.10	1.50	2.30	63.58	0.22	0.45	0.37	5.02
CB-C2.2	CURB	C2.2	1.78	3.77	5.55	1.08	2.20	0.25	0.61	12.56	2.04	14.00	4.00	10.00	0.02	0.09	1.50	2.30	83.73	0.17	0.41	0.32	6.63
CB-D1.1	CURB	D1.1	4.33	1.18	5.51	3.94	1.77	0.25	0.57	5.85	7.15	14.00	4.00	10.00	0.02	0.10	1.50	2.30	78.34	0.18	0.44	0.79	5.55
CB-D2.1	CURB	D2.1	3.04	1.99	5.03	1.77	3.94	0.25	0.56	4.36	7.74	14.00	4.00	10.00	0.02	0.08	1.50	2.30	94.83	0.15	0.45	0.60	5.02

25-YR AREA ZONE DRAIN -SAG

				CLOGGING FACTOR						
ID	TYPE	DRAINAGE AREA	Qbasin	CURB	GRATE	ORIFACE AREA	PONDED DEPTH	ALLOWABLE DEPTH	CAPACITY	Qcaptured
		ID	[CFS]	[%]	[%]	[SF]	[FT]	[FT]	[CFS]	[CFS]
CB-BCRT	AREA INLET	BCRT	3.93	10	50	8	0.42	1.0	6.73	3.93
CB-E3	AREA INLET	E3	3.87	10	50	8	0.42	1.6	6.73	3.87

100-YR AREA ZONE DRAIN -SAG

				CLOGGING FACTOR						
ID	TYPE	DRAINAGE AREA	Qbasin	CURB	GRATE	ORIFACE AREA	PONDED DEPTH	ALLOWABLE DEPTH	CAPACITY	Qcaptured
		ID	[CFS]	[%]	[%]	[SF]	[FT]	[FT]	[CFS]	[CFS]
CB-BCRT	AREA INLET	BCRT	6.31	10	50	8	0.49	1.0	6.73	6.31
CB-E3	AREA INLET	E3	5.58	10	50	8	0.47	1.6	6.73	5.58

a	Gutter depression depth
y_0	Ponding Depth at inlet depression
Sx	Gutter logitudinal slope
y	Head at inlet opening
W	Gutter depression width (perpendicular to curb)
Cw	Weir coefficient
L_r	Length of curb inlet opening required to intercept the total flow
L_a/L_r	Ratio of design length to length required for total interception
a/y_0	Ratio of inlet depression to ponding depth at inlet depression
Q/Qa	Ratio of Intercepted discharge to total Discharge

WYOMING SPRINGS
SEGMENT 1
ROUND ROCK, TX

ROUND ROCK TEXAS

halff
13620 BRANTWICK DR
BLDG C, STE 100
AUSTIN, TX 78729
(512) 777-4600
TBPELS FIRM #312

Revision No.	Date	Description

F-3122 5/5/23
STATE OF TEXAS
JEFFREY L NAGY
133255
LICENSED
PROFESSIONAL ENGINEER

100% SUBMITTAL

Project No.:	36179.002
Issued:	5/9/2023
Drawn By:	SC
Checked By:	
Scale:	N.T.S

Sheet Title
DRAINAGE CALCULATIONS (8 OF 12)

197
Sheet Number

5/9/2023 9:55:05 AM ak1914 H:\LF Xrefs\Logos\halff.dgn Xrefs\Logos\Logo.dgn Xrefs\36179.002 STRMx\Cx\Cx-48.dgn J:\HALFF_JOBS_FW\36179.002\...

WYOMING SPRINGS- DITCH CALCULATIONS

OSD1_DITCH																		
SBFR STATION	FLOWLINE ELEVATION	TOP OF DITCH ELEVATION	SLOPE	BOTTOM WIDTH	LEFT SIDE SLOPE	RIGHT SIDE SLOPE	DEPTH	MANNING'S	DITCH MATERIAL	NORMAL DEPTH	AREA	P_W	R_h	DESIGN Q	V	$SHEAR_{AVG}$	WSEL	FREEBOARD
		(ft)	(%)	(ft)	(x:1)	(x:1)	(ft)	"n"		(ft)	(sf)	(ft)	(ft)	(cfs)	(ft/sec)	(lb/sf)	(ft)	(ft)
1+00.00	772.74	775.01	0.82%	3.00	3.0	3.0	2.27	0.06	GRASS	0.83	4.58	8.26	0.55	6.92	1.51	0.28	773.57	1.44
1+50.00	771.21	773.88	0.82%	3.00	3.0	3.0	2.67	0.06	GRASS	0.83	4.58	8.26	0.55	6.92	1.51	0.28	772.04	1.83
2+00.00	770.80	773.17	0.82%	3.00	3.0	3.0	2.37	0.06	GRASS	0.83	4.58	8.26	0.55	6.92	1.51	0.28	771.63	1.54
2+50.00	770.39	772.20	0.82%	3.00	3.0	3.0	1.81	0.06	GRASS	0.83	4.58	8.26	0.55	6.92	1.51	0.28	771.22	0.97
3+00.00	769.98	771.29	2.89%	3.00	3.0	3.0	1.31	0.06	GRASS	0.60	2.90	6.82	0.43	6.92	2.38	0.77	770.58	0.70
3+50.00	768.54	770.60	2.89%	3.00	3.0	3.0	2.06	0.06	GRASS	0.60	2.90	6.82	0.43	6.92	2.38	0.77	769.14	1.45
4+00.00	767.09	768.89	2.89%	3.00	3.0	3.0	1.80	0.06	GRASS	0.60	2.90	6.82	0.43	6.92	2.38	0.77	767.69	1.19
4+50.00	765.64	767.18	2.89%	3.00	3.0	3.0	1.54	0.06	GRASS	0.60	2.90	6.82	0.43	6.92	2.38	0.77	766.24	0.94
4+55.00	765.50	767.01	5.80%	3.00	3.0	3.0	1.51	0.06	GRASS	0.50	2.26	6.18	0.37	6.92	3.06	1.33	766.00	1.01
5+00.00	762.89	764.39	5.80%	3.00	3.0	3.0	1.50	0.06	GRASS	0.50	2.27	6.18	0.37	6.92	3.06	1.33	763.39	1.00
5+50.00	759.99	761.17	5.80%	3.00	3.0	3.0	1.18	0.06	GRASS	0.50	2.27	6.18	0.37	6.92	3.06	1.33	760.49	0.67
6+00.00	757.09	758.57	5.80%	3.00	3.0	3.0	1.48	0.06	GRASS	0.50	2.27	6.18	0.37	6.92	3.06	1.33	757.59	0.97
6+50.00	754.19	755.53	5.80%	3.00	3.0	3.0	1.34	0.06	GRASS	0.50	2.26	6.18	0.37	6.92	3.06	1.33	754.69	0.83
6+56.00	753.84	755.18	0.60%	3.00	3.0	3.0	1.34	0.06	GRASS	0.90	5.13	8.69	0.59	6.92	1.35	0.22	754.74	0.44
6+70.81	753.75	755.09	0.60%	3.00	3.0	3.0	1.34	0.06	GRASS	0.90	5.13	8.69	0.59	6.92	1.35	0.22	754.65	0.44

BCRT_DITCH																		
SBFR STATION	FLOWLINE ELEVATION	TOP OF DITCH ELEVATION	SLOPE	BOTTOM WIDTH	LEFT SIDE SLOPE	RIGHT SIDE SLOPE	DEPTH	MANNING'S	DITCH MATERIAL	NORMAL DEPTH	AREA	P_W	R_h	DESIGN Q	V	$SHEAR_{AVG}$	WSEL	FREEBOARD
		(ft)	(%)	(ft)	(x:1)	(x:1)	(ft)	"n"		(ft)	(sf)	(ft)	(ft)	(cfs)	(ft/sec)	(lb/sf)	(ft)	(ft)
1+16.31	772.07	772.57	10.64%	2.00	3.0	6.0	0.50	0.06	GRASS	0.45	1.81	6.16	0.29	6.30	3.48	1.95	772.52	0.05
1+20.00	771.68	772.49	10.64%	2.00	3.0	6.0	0.81	0.06	GRASS	0.45	1.81	6.16	0.29	6.30	3.48	1.95	772.13	0.36
1+40.00	769.55	770.55	10.64%	2.00	3.0	6.0	1.00	0.06	GRASS	0.45	1.81	6.16	0.29	6.30	3.48	1.95	770.00	0.55
1+60.00	767.42	768.42	10.64%	2.00	3.0	6.0	1.00	0.06	GRASS	0.45	1.81	6.16	0.29	6.30	3.48	1.95	767.87	0.55
1+76.65	765.65	766.65	10.64%	2.00	3.0	6.0	1.00	0.06	GRASS	0.45	1.81	6.16	0.29	6.30	3.48	1.95	766.10	0.55
1+80.00	765.48	766.48	4.98%	2.00	3.0	6.0	1.00	0.06	GRASS	0.53	2.32	6.90	0.34	6.30	2.71	1.05	766.01	0.47
2+00.00	764.49	765.49	4.98%	2.00	3.0	6.0	1.00	0.06	GRASS	0.53	2.32	6.90	0.34	6.30	2.71	1.05	765.02	0.47
2+20.00	763.49	764.49	4.98%	2.00	3.0	6.0	1.00	0.06	GRASS	0.53	2.32	6.90	0.34	6.30	2.71	1.05	764.02	0.47
2+40.00	762.49	763.49	4.98%	2.00	3.0	6.0	1.00	0.06	GRASS	0.53	2.32	6.90	0.34	6.30	2.71	1.05	763.02	0.47
2+60.00	761.50	762.50	4.98%	2.00	3.0	6.0	1.00	0.06	GRASS	0.53	2.32	6.90	0.34	6.30	2.71	1.05	762.03	0.47
2+80.00	760.50	761.50	4.98%	2.00	3.0	6.0	1.00	0.06	GRASS	0.53	2.32	6.90	0.34	6.30	2.71	1.05	761.03	0.47
3+00.00	759.51	760.51	4.98%	2.00	3.0	6.0	1.00	0.06	GRASS	0.53	2.32	6.90	0.34	6.30	2.71	1.05	760.04	0.47
3+20.00	758.51	759.51	4.98%	2.00	3.0	6.0	1.00	0.06	GRASS	0.53	2.32	6.90	0.34	6.30	2.71	1.05	759.04	0.47
3+40.00	757.51	758.51	4.98%	2.00	3.0	6.0	1.00	0.06	GRASS	0.53	2.32	6.90	0.34	6.30	2.71	1.05	758.04	0.47
3+52.29	756.90	757.90	5.86%	2.00	3.0	6.0	1.00	0.06	GRASS	0.51	2.19	6.71	0.33	6.30	2.88	1.19	757.41	0.49
3+60.00	756.45	757.45	5.86%	2.00	3.0	6.0	1.00	0.06	GRASS	0.51	2.19	6.71	0.33	6.30	2.88	1.19	756.96	0.49
3+80.00	755.28	756.28	5.86%	2.00	3.0	6.0	1.00	0.06	GRASS	0.51	2.19	6.71	0.33	6.30	2.88	1.19	755.79	0.49
3+89.13	754.74	755.74	33.28%	2.00	3.0	6.0	1.00	0.06	GRASS	0.34	1.20	5.14	0.23	6.30	5.25	4.85	755.08	0.66
4+02.98	753.00	754.93	33.28%	2.00	3.0	6.0	1.93	0.06	GRASS	0.34	1.20	5.14	0.23	6.30	5.25	4.85	753.34	1.58

WYOMING SPRINGS
SEGMENT 1
ROUND ROCK, TX

ROUND ROCK
TEXAS

halff
13620 BRAKSVICK DR
BLDG C, STE 100
AUSTIN, TX 78729
(512) 777-4600
TBPELS FIRM #312

Revision No.	Date	Description

F-312 4/5/23
STATE OF TEXAS
JEFFREY L. NAGY
133255
LICENSED
PROFESSIONAL ENGINEER

100% SUBMITTAL

Project No.:	36179.002
Issued:	4/28/2023
Drawn By:	SC
Checked By:	JN
Scale:	N.T.S

Sheet Title
DRAINAGE CALCULATIONS (9 OF 12)

198
Sheet Number

4/28/2023 11:12:23 AM ak7914 HALFF
Xrefs: BCnd=E:\36000\36179\02\CAD\Sheets\ASE\36179-002 STRM-CALCS-4.dgn
Plotted: 28-APR-2023 11:12 By: AKOLLAR
P:\36179\02\CAD\Sheets\ASE\36179-002 STRM-CALCS-4.dgn

SAM BASS - DRAINAGE AREA CALCULATIONS

DEVELOPED CONDITIONS SUMMARY TABLE								
BASIN	AREA	TC*	25-YR C VALUE	100-YR C VALUE	25-YR INTENSITY	100-YR INTENSITY	Q25	Q100
	[ACRE]	[MIN]			[IN/HR]	[IN/HR]	[CFS]	[CFS]
Culv-A (includes Ditch 1W & Ditch 1E)	5.04	12.00	0.57	0.65	8.16	10.50	23.46	34.29
Ditch-1W	2.85	8.00	0.56	0.64	9.61	12.40	15.45	22.67
Ditch - 1E (includes, SB-NW, SB-NE, & Culv-B)	2.19	12.00	0.58	0.66	8.16	10.50	10.34	15.09
SB-NW	1.04	5.00	0.58	0.66	11.10	14.20	6.75	9.80
SB-N	0.13	5.00	0.81	0.89	11.10	14.20	1.17	1.66
SB-NE	0.29	5.00	0.59	0.67	11.10	14.20	1.87	2.71
Culv-B	0.73	10.00	0.53	0.60	8.84	11.40	3.40	5.01
Culv-D (includes Ditch 2W & 2E)	2.53	17.00	0.58	0.66	6.89	8.81	10.10	14.65
Ditch-2W	1.24	17.00	0.51	0.58	6.89	8.81	4.35	6.38
Ditch-2E	1.29	5.00	0.65	0.73	11.10	14.20	9.27	13.34
SB-E	4.53	13.00	0.60	0.68	7.86	10.10	21.45	31.17
E3 (includes Culv-C1 and Culv-C2)	0.48	5.00	0.72	0.81	11.10	14.20	3.84	5.53
Culv-C1 (includes Culv-C2)	0.26	5.00	0.72	0.80	11.10	14.20	2.10	3.00
Culv-C2	0.12	5.00	0.69	0.78	11.10	14.20	0.93	1.33

25-YR AREA ZONE DRAIN - SAG

ID	TYPE	DRAINAGE AREA	Qbasin	CLOGGING FACTOR CURB	CLOGGING FACTOR GRATE	ORIFICE AREA	PONDED DEPTH	ALLOWABLE DEPTH	CAPACITY	DICHARGE
		ID	[CFS]	[%]	[%]	[SF]	[FT]	[FT]	[CFS]	[CFS]
SB-N	3'x3' GRATE INLET	SB-N	1,17	10,00	50,00	4,51	0,01	0,10	3,43	1,17
SB-NE	3'x3' GRATE INLET	SB-NE	1,87	10,00	50,00	4,51	0,03	0,50	7,68	1,87

100-YR AREA ZONE DRAIN - SAG

ID	TYPE	DRAINAGE AREA	Qbasin	CLOGGING FACTOR CURB	CLOGGING FACTOR GRATE	ORIFICE AREA	PONDED DEPTH	ALLOWABLE DEPTH	CAPACITY	DICHARGE
		ID	[CFS]	[%]	[%]	[SF]	[FT]	[FT]	[CFS]	[CFS]
SB-N	3'x3' GRATE INLET	SB-N	1,66	10,00	50,00	4,51	0,02	0,10	3,43	1,66
SB-NE	3'x3' GRATE INLET	SB-NE	2,71	10,00	50,00	4,51	0,06	0,50	7,68	2,71

SAM BASS STORM SEWER CALCULATIONS

LINK CONFIGURATION										
LINK ID	U/S NODE	D/S NODE	LENGTH	SHAPE	RISE	SPAN	n VALUE	SLOPE	U/S INVERT	D/S INVERT
			[FT]		[FT]	[FT]		[%]	[FT]	[FT]
CULVERT-B-LAT-1,1	T-72	T-71	5,00	Circle	1,5	-	0,013	1,01	785,04	784,99
CULVERT-B-LAT-1,2	SB-N	T-72	4,50	Circle	1,5	-	0,013	0,45	785,06	785,04
CULVERT-B-LAT-2,1	T-71	T-69	6,40	Circle	1,5	-	0,013	0,63	785,30	785,26
CULVERT-B-LAT-2,2	SB-NE	T-71	4,60	Circle	1,5	-	0,013	0,33	785,32	785,30
CULVERT-D-LAT-1,1	MH-D1	MH-D	215,00	Circle	3	-	0,013	0,84	786,95	785,14
CULVERT-D-LAT-1,2	T-68	MH-D1	175,40	Circle	3	-	0,013	1,00	788,71	786,95
CULVERT-D-LAT-1,3	LAT-D-HEADWALL	T-68	11,60	Circle	3	-	0,013	0,95	788,82	788,71
LINE-D-1	MH-D	CULVERT-D-OUTFALL	17,50	Circle	3	-	0,013	0,23	785,14	785,10
LINE-D-2	CULVERT-D-HEADWALL	MH-D	71,80	Circle	2,5	-	0,013	1,62	786,80	785,64

25-YR LINK HYDRAULICS

LINK	U/S NODE	D/S NODE	HGL U/S	HGL D/S	DISCHARGE	CAPACITY	FRICTION SLOPE	U/S JUNCTION LOSS	UPSTREAM VELOCITY	UPSTREAM DEPTH	DOWNSTREAM VELOCITY	DOWNSTREAM DEPTH
			[FT]	[FT]	[CFS]	[CFS]	[%]	[FT]	[FPS]	[FT]	[FPS]	[FT]
CULVERT-B-LAT-1,1	T-72	T-71	785,79	785,79	1,19	10,53	0,05	0,00	1,35	0,75	1,24	0,80
CULVERT-B-LAT-1,2	SB-N	T-72	785,81	785,81	1,19	7,04	0,05	0,00	1,35	0,75	1,30	0,77
CULVERT-B-LAT-2,1	T-71	T-69	786,02	786,02	1,89	8,33	0,14	0,01	2,27	0,72	2,11	0,76
CULVERT-B-LAT-2,2	SB-NE	T-71	786,10	786,09	1,89	6,00	0,11	0,01	2,03	0,78	2,00	0,79
CULVERT-D-LAT-1,1	MH-D1	MH-D	788,44	788,50	21,38	61,20	0,18	0,38	6,12	1,49	3,02	3,36
CULVERT-D-LAT-1,2	T-68	MH-D1	790,21	788,58	21,66	66,81	0,99	1,74	6,15	1,50	5,51	1,63
CULVERT-D-LAT-1,3	LAT-D-HEADWALL	T-68	791,11	791,11	21,68	64,90	0,12	0,01	3,75	2,29	3,57	2,40
LINE-D-1	MH-D	CULVERT-D-OUTFALL	788,13	788,10	29,52	31,89	0,19	0,03	4,18	2,99	4,18	3,00
LINE-D-2	CULVERT-D-HEADWALL	MH-D	788,48	788,50	10,39	52,15	0,07	0,05	2,96	1,68	2,12	2,86

100-YR LINK HYDRAULICS

LINK	U/S NODE	D/S NODE	HGL U/S	HGL D/S	DISCHARGE	CAPACITY	FRICTION SLOPE	U/S JUNCTION LOSS	UPSTREAM VELOCITY	UPSTREAM DEPTH	DOWNSTREAM VELOCITY	DOWNSTREAM DEPTH
			[FT]	[FT]	[CFS]	[CFS]	[%]	[FT]	[FPS]	[FT]	[FPS]	[FT]
CULVERT-B-LAT-1,1	T-72	T-71	786,08	786,08	1,67	10,53	0,04	0,00	1,28	1,04	1,22	1,09
CULVERT-B-LAT-1,2	SB-N	T-72	786,09	786,09	1,67	7,04	0,04	0,00	1,28	1,03	1,26	1,05
CULVERT-B-LAT-2,1	T-71	T-69	786,36	786,35	2,75	8,33	0,09	0,01	2,07	1,06	1,99	1,09
CULVERT-B-LAT-2,2	SB-NE	T-71	786,41	786,41	2,75	6,00	0,09	0,00	1,99	1,10	1,97	1,11
CULVERT-D-LAT-1,1	MH-D1	MH-D	789,26	788,94	31,16	61,20	0,21	0,46	5,33	2,31	4,41	3,80
CULVERT-D-LAT-1,2	T-68	MH-D1	790,53	789,29	31,55	66,81	0,89	1,57	7,02	1,82	5,34	2,34
CULVERT-D-LAT-1,3	LAT-D-HEADWALL	T-68	791,65	791,64	31,57	64,90	0,20	0,02	4,57	2,83	4,49	2,93
LINE-D-1	MH-D	CULVERT-D-OUTFALL	788,17	788,10	42,91	31,89	0,41	0,07	6,07	3,03	6,07	3,00
LINE-D-2	CULVERT-D-HEADWALL	MH-D	789,02	788,94	15,14	52,15	0,13	0,10	3,29	2,22	3,08	3,30

WYOMING SPRINGS
SEGMENT 1
ROUND ROCK, TX

ROUND ROCK TEXAS

halff
13620 BRANTWICK DR
BLDG C, STE 100
AUSTIN, TX 78729
(512) 777-4600
TBPELS FIRM #312

Revision No.	Date	Description

F-312 4-14-23
STATE OF TEXAS
ANDREW M. L. DUTTON
117255
LICENSED
PROFESSIONAL ENGINEER

100% SUBMITTAL

Project No.:	36179.002
Issued:	4/14/2023
Drawn By:	SC
Checked By:	JN
Scale:	N.T.S

Sheet Title
DRAINAGE CALCULATIONS (10 OF 12)

199
Sheet Number

DITCH CALCULATIONS - SAM BASS

SB DITCH 1W & 1E																									
SAM BASS CL STA	OFFSET	FLOWLINE ELEVATION	TOP OF DITCH ELEVATION	SLOPE	BOTTOM WIDTH	LEFT SIDE SLOPE	RIGHT SIDE SLOPE	ALLOWABLE DEPTH	MANNING'S N (FLUME)	FLUME MATERIAL	MANNINGS N (DITCH)	DITCH MATERIAL	COMPOSITE N	NORMAL DEPTH	AREA (Concrete)	AREA (Grass)	AREA (Total)	P (Concrete)	P (Grass)	P (Total)	R	DESIGN Q	V	$SHEAR_{AVG}$	WSEL	FREEBOARD
			(ft)	(%)	(ft)	(x:1)	(x:1)	(ft)						(ft)	(sf)	(sf)	(sf)	(ft)	(ft)	(ft)	(ft)	(cfs)	(ft/sec)	(lb/sf)	(ft)	(ft)
37+59.81	-33.4	785.54	786.54	0.50%	0.00	8.1	11.2	1.00	0.015	Concrete	0.040	Grass	0.032	0.85	2.41	1.20	3.61	4.12	6.84	10.97	0.33	5.67 *	1.57	0.10	786.39	0.15
38+00	-33.0	785.34	786.34	0.50%	0.00	8.1	11.2	1.00	0.015	Concrete	0.040	Grass	0.032	0.85	2.41	1.20	3.61	4.12	6.84	10.97	0.33	5.67 *	1.57	0.10	786.19	0.15
38+50	-33.5	785.09	786.24	0.50%	0.00	9.1	7.7	1.15	0.015	Concrete	0.040	Grass	0.031	0.85	2.40	1.03	3.43	4.12	5.92	10.04	0.34	5.67 *	1.65	0.11	785.94	0.30
39+00	-33.9	784.84	786.10	0.50%	0.00	11.0	7.7	1.26	0.015	Concrete	0.040	Grass	0.034	1.08	3.32	3.15	6.46	4.12	10.91	15.03	0.43	11.34**	1.75	0.13	785.92	0.18
39+50	-34.6	784.59	786.03	0.50%	0.00	14.0	6.1	1.44	0.015	Concrete	0.040	Grass	0.034	1.07	3.30	3.32	6.62	4.12	11.62	15.74	0.42	11.34**	1.71	0.13	785.66	0.37
40+00	-35.2	784.34	786.01	0.50%	0.00	16.2	5.0	1.67	0.015	Concrete	0.040	Grass	0.035	1.07	3.28	3.45	6.73	4.12	12.17	16.29	0.41	11.34**	1.68	0.13	785.41	0.60
40+50	-38.7	784.09	785.91	0.50%	0.00	16.1	8.0	1.82	0.015	Concrete	0.040	Grass	0.036	1.31	4.25	7.98	12.23	4.12	19.68	23.81	0.51	22.67	1.85	0.16	785.40	0.51
41+00	-43.2	783.84	785.90	0.50%	0.00	3.0	10.0	2.06	0.015	Concrete	0.040	Grass	0.035	1.42	4.69	5.52	10.20	4.12	12.17	16.30	0.63	22.67	2.22	0.20	785.26	0.64
41+50	-44.0	783.59	785.71	0.50%	0.00	3.0	7.5	2.12	0.015	Concrete	0.040	Grass	0.034	1.45	4.81	4.76	9.56	4.12	10.21	14.34	0.67	22.67	2.37	0.21	785.04	0.67
42+00	-43.5	783.34	785.41	0.50%	0.00	20.7	5.4	2.07	0.015	Concrete	0.040	Grass	0.037	1.30	4.20	8.33	12.52	4.12	20.94	25.06	0.50	22.67	1.81	0.16	784.64	0.77
42+50	-45.8	783.09	785.23	0.50%	0.00	21.3	4.3	2.14	0.015	Concrete	0.040	Grass	0.037	1.30	4.21	8.25	12.46	4.12	20.66	24.78	0.50	22.67	1.82	0.16	784.39	0.84
42+66.30	-46.1	783.01	EXIST CROSS CULVERT BY OTHERS																							
43+00	-49.1	783.19	785.20	0.53%	0.00	3.0	4.4	2.01	0.015	Concrete	0.040	Grass	0.031	1.24	3.95	2.01	5.95	4.12	5.65	9.78	0.61	15.09	2.53	0.20	784.43	0.77
43+50	-50.0	783.47	785.44	0.56%	0.00	3.0	4.1	1.97	0.015	Concrete	0.040	Grass	0.030	1.22	3.90	1.86	5.76	4.12	5.35	9.47	0.61	15.09	2.62	0.21	784.69	0.75
44+00	-50.7	783.75	786.05	0.56%	0.00	3.0	4.1	2.30	0.015	Concrete	0.040	Grass	0.030	1.22	3.90	1.86	5.76	4.12	5.35	9.47	0.61	15.09	2.62	0.21	784.97	1.08
44+50	-50.3	784.03	786.95	0.56%	0.00	3.0	4.1	2.92	0.015	Concrete	0.040	Grass	0.030	1.22	3.90	1.86	5.76	4.12	5.35	9.47	0.61	15.09	2.62	0.21	785.25	1.70
45+00	-48.6	784.31	788.24	0.56%	0.00	3.3	4.2	3.93	0.015	Concrete	0.040	Grass	0.031	1.22	3.89	1.96	5.86	4.12	5.62	9.74	0.60	15.09	2.58	0.21	785.53	2.71
45+14.30	-39.9	784.40	CULVERT B																							
47+00	-44.7	787.26																								
47+50	-43.5	787.51	788.81	0.50%	0.00	3.1	6.7	1.30	0.015	Concrete	0.040	Grass	0.027	0.78	2.12	0.38	2.50	4.12	2.80	6.92	0.36	5.01	2.00	0.11	788.29	0.52
48+00	-43.3	787.76	788.94	0.50%	0.00	3.1	9.2	1.18	0.015	Concrete	0.040	Grass	0.028	0.80	2.18	0.54	2.72	4.12	3.70	7.83	0.35	5.01	1.84	0.11	788.56	0.38
48+50	-43.1	788.01	789.14	0.50%	0.00	3.1	11.4	1.13	0.015	Concrete	0.040	Grass	0.029	0.81	2.22	0.68	2.90	4.12	4.49	8.62	0.34	5.01	1.73	0.11	788.82	0.32
48+94.40	-43.1	788.23	789.54	0.50%	0.00	3.1	8.0	1.31	0.015	Concrete	0.040	Grass	0.028	0.79	2.16	0.47	2.63	4.12	3.29	7.41	0.35	5.01	1.90	0.11	789.02	0.52

* ASSUMED 25% OF TOTAL FLOW FOR DA 1W, FOR UPSTREAM PORTION OF DITCH

** ASSUMED 50% OF TOTAL FLOW FOR DA 1W, FOR UPSTREAM PORTION OF DITCH

SB DITCH 2W																									
SAM BASS CL STA	OFFSET	FLOWLINE ELEVATION	TOP OF DITCH ELEVATION	SLOPE	BOTTOM WIDTH	LEFT SIDE SLOPE	RIGHT SIDE SLOPE	ALLOWABLE DEPTH	MANNING'S N (FLUME)	FLUME MATERIAL	MANNINGS N (DITCH)	DITCH MATERIAL	COMPOSITE N	NORMAL DEPTH	AREA (Concrete)	AREA (Grass)	AREA (Total)	P (Concrete)	P (Grass)	P (Total)	R	DESIGN Q	V	$SHEAR_{AVG}$	WSEL	FREEBOARD
			(ft)	(%)	(ft)	(x:1)	(x:1)	(ft)						(ft)	(sf)	(sf)	(sf)	(ft)	(ft)	(ft)	(ft)	(cfs)	(ft/sec)	(lb/sf)	(ft)	(ft)
48+94.40	-43.1	788.23	789.54	0.54%	0.00	3.0	8.0	1.31	0.015	Concrete	0.040	Grass	0.029	0.86	2.45	0.73	3.18	4.12	4.08	8.21	0.39	6.38	2.00	0.13	789.09	0.45
49+00	-43.1	788.20	789.51	0.54%	0.00	3.0	8.0	1.31	0.015	Concrete	0.040	Grass	0.029	0.86	2.45	0.73	3.18	4.12	4.08	8.21	0.39	6.38	2.00	0.13	789.06	0.45
49+50	-43.0	787.92	789.71	0.56%	0.00	3.0	6.0	1.79	0.015	Concrete	0.040	Grass	0.027	0.84	2.37	0.53	2.90	4.12	3.17	7.29	0.40	6.38	2.20	0.14	788.76	0.95
50+00	-42.8	787.64	789.84	0.56%	0.00	3.0	6.1	2.20	0.015	Concrete	0.040	Grass	0.027	0.84	2.37	0.54	2.91	4.12	3.21	7.33	0.40	6.38	2.19	0.14	788.48	1.36
50+50	-42.8	787.37	789.98	0.54%	0.00	3.0	6.2	2.61	0.015	Concrete	0.040	Grass	0.028	0.85	2.40	0.57	2.97	4.12	3.32	7.44	0.40	6.38	2.15	0.13	788.22	1.76
51+00	-42.4	787.10	789.99	0.54%	0.00	3.0	5.3	2.89	0.015	Concrete	0.040	Grass	0.027	0.84	2.37	0.49	2.86	4.12	2.94	7.06	0.41	6.38	2.23	0.14	787.94	2.05
51+50	-44.1	786.12	789.69	1.96%	0.00	3.0	4.0	3.57	0.015	Concrete	0.040	Grass	0.019	0.58	1.31	0.02	1.34	4.12	0.57	4.70	0.28	6.38	4.77	0.35	786.70	2.99
51+54.45	-44.1	786.07	CULVERT D																							

WYOMING SPRINGS
SEGMENT 1
ROUND ROCK, TX

ROUND ROCK TEXAS

halff
13620 BRANTWICK DR
BLDG C, STE 100
AUSTIN, TX 78729
(512) 777-4600
TBPELS FIRM #312

Revision No.	Date	Description

F-3122 STATE OF TEXAS ANDREW M. L. DUTTON 117255 LICENSED PROFESSIONAL ENGINEER 4-14-23

100% SUBMITTAL

Project No.:	36179.002
Issued:	4/14/2023
Drawn By:	SC
Checked By:	JN
Scale:	AS SHOWN

Sheet Title
DRAINAGE CALCULATIONS (11 OF 12)

200
Sheet Number

DITCH CALCULATIONS - SAM BASS

SB DITCH 3																									
SAM BASS CL STA	OFFSET	FLOWLINE ELEVATION	TOP OF DITCH ELEVATION	SLOPE	BOTTOM WIDTH	LEFT SIDE SLOPE	RIGHT SIDE SLOPE	ALLOWABLE DEPTH	MANNING'S N (FLUME)	FLUME MATERIAL	MANNINGS N (DITCH)	DITCH MATERIAL	COMPOSITE N	NORMAL DEPTH	AREA (Concrete)	AREA (Grass)	AREA (Total)	P (Concrete)	P (Grass)	P (Total)	R	DESIGN Q	V	$SHEAR_{AVG}$	WSEL	FREEBOARD
			(ft)	(%)	(ft)	(x:1)	(x:1)	(ft)						(ft)	(sf)	(sf)	(sf)	(ft)	(ft)	(ft)	(ft)	(cfs)	(ft/sec)	(lb/sf)	(ft)	(ft)
46+73.86	52.8	786.98	787.40	6.73%	0.00	7.4	3.0	0.42	N/A	N/A	0.040	Grass	0.040	0.39	0.00	0.79	0.79	0.00	4.15	4.15	0.19	2.53 *	3.19	0.80	787.37	0.03
47+00	53.8	785.22	787.81	6.73%	0.00	7.4	3.0	2.59	N/A	N/A	0.040	Grass	0.040	0.39	0.00	0.79	0.79	0.00	4.15	4.15	0.19	2.53 *	3.19	0.80	785.61	2.20
47+01.34	53.9	785.10	INLET E3																							
47+09.34	53.9	785.10																								
47+50	53.0	785.51	788.19	1.01%	0.00	6.8	3.0	2.68	0.015	Concrete	0.040	Grass	0.015	0.45	0.83	0.00	0.83	3.75	0.00	3.75	0.22	3.00	3.63	0.14	785.96	2.23
47+68.90	53.0	785.70	CULVERT C1																							
47+89.00	53.0	785.90																								
48+00	53.0	786.01	788.57	1.00%	0.00	6.8	3.0	2.56	0.015	Concrete	0.040	Grass	0.015	0.46	0.83	0.00	0.83	3.76	0.00	3.76	0.22	3.00	3.62	0.14	786.47	2.10
48+50	53.0	786.51	789.03	1.00%	0.00	6.3	3.0	2.52	0.015	Concrete	0.040	Grass	0.015	0.46	0.83	0.00	0.83	3.76	0.00	3.76	0.22	3.00	3.62	0.14	786.97	2.06
48+69.00	53.0	786.70	CULVERT C2																							
48+89.00	53.0	786.90																								
49+00	53.0	787.01	789.40	1.00%	0.00	7.0	3.0	2.39	0.015	Concrete	0.040	Grass	0.015	0.34	0.45	0.00	0.45	2.77	0.00	2.77	0.16	1.33	2.95	0.10	787.35	2.05
49+50	53.0	787.58	789.46	1.14%	0.00	4.8	3.0	1.88	0.015	Concrete	0.040	Grass	0.015	0.33	0.43	0.00	0.43	2.70	0.00	2.70	0.16	1.33	3.10	0.11	787.91	1.55
50+00	53.0	788.21	788.90	1.26%	0.00	4.5	3.0	0.69	0.015	Concrete	0.040	Grass	0.015	0.32	0.41	0.00	0.41	2.65	0.00	2.65	0.16	1.33	3.22	0.12	788.53	0.37

* ASSUMED Q ON WEST SIDE OF INLET TO BE (Q E3) - (Q DRWY 2)

WYOMING SPRINGS
SEGMENT 1
ROUND ROCK, TX

ROUND ROCK TEXAS

halff
13620 BRANTWICK DR
BLDG C, STE 100
AUSTIN, TX 78729
(512) 777-4600
TBPELS FIRM #312

Revision No.	Date	Description
.	.	.
.	.	.
.	.	.
.	.	.
.	.	.
.	.	.
.	.	.
.	.	.

F312 4-14-23
STATE OF TEXAS
ANDREW M. L. DUTTON
117255
LICENSED
PROFESSIONAL ENGINEER

100% SUBMITTAL

Project No.:	36179.002
Issued:	4/14/2023
Drawn By:	SC
Checked By:	JN
Scale:	N.T.S

Sheet Title
DRAINAGE CALCULATIONS (12 OF 12)

201
Sheet Number

4/14/2023 10:19:48 AM a0378 H:\4.F Plotted by: Sam Cook
Date: 4/14/2023 10:19:48 AM
Plotted by: Sam Cook
H:\4.Projects\36179.002 ETRM\CAD\Sheets\ASB\36179.002 ETRM-CALCS-A.dgn
H:\4.Projects\36179.002 ETRM\CAD\Sheets\ASB\36179.002 ETRM-CALCS-A.dgn
Date: 4/14/2023 10:19:48 AM
Plotted by: Sam Cook

Texas Commission on Environmental Quality

TSS Required Load Reduction Calculations

Project Name: Wyoming Springs
Project Location: Round Rock, TX
Date Prepared: 3/9/2022
Prepared For: Jeff Nagy

$$Lm = 27.2(AN \times P)$$

where: Lm = Required TSS removal
An = Net increase in impervious area for site
P = Average annual precipitation, inches

Site Data:

County = **Williamson**
Stormwater Quality Structure = **Wet Vault**
Total site area = **31.60** acres
Pre-development impervious area = **0.40** acres
Post-development impervious area = **10.16** acres
Post-development impervious fraction = **0.32**
P = **32** inches

Lm = **8495** lbs. Total Project Required Removal

Drainage Basin	Area	Total Area	Impervious Cover	Impervious Area	Pre-Dev. Impervious Cover	A_n for Drainage Area	Runoff Coef. (C)	Pervious Area	Runoff Coef. (C)	Composite Runoff Coef. (C)	**Effective Area**	Intensity (I)	Calculated Flow (Q)	Required Pollutant Removal	Storm Trooper Model	Unit Surface Area	By-Pass Flowrate	Intensity Treated	Fraction of Flow Treated (F)	F/0.9	Overflow Rate (ft/s)	Removal Effeciency	Actual Effeciency	Load Reduction (L_R)
	[ID]	[ac]	[%]	[ac]	[ac]	[ac]		[ac]			[ac]	[in/hr]	[cfs]	Lm in [lbs]	#	(sf)	(cfs)	[in/hr]	[Figure 3-11]			[Figure 3-10]		(lbs)
A	A2	**0.79**	**74.04**	0.59	**0.00**	0.59	0.9	0.21	0.03	0.67	0.54	1.1	0.59	512	**40**	588	5.01	1.10	**0.90**	1.00	1.00E-03	**84.63%**	84.63%	**554**
A	A1 & A3	**0.83**	**67.51**	0.56	**0.00**	0.56	0.9	0.27	0.03	0.62	0.51	1.1	0.56	488	**110**	913	8.91	1.10	**0.90**	1.00	6.17E-04	**88.32%**	88.32%	**552**
A	A4 & A7	**1.04**	**69.29**	0.72	**0.00**	0.72	0.9	0.32	0.03	0.63	0.66	1.1	0.72	626	**110**	913	8.91	1.10	**0.90**	1.00	7.92E-04	**85.23%**	85.23%	**683**
A	A5 & A6	**1.25**	**76.39**	0.96	**0.00**	0.96	0.9	0.30	0.03	0.69	0.87	1.1	0.96	832	**110**	913	8.91	1.10	**0.90**	1.00	1.05E-03	**84.93%**	84.93%	**903**
B	B1.1 & B1.2 & B1.3	**0.83**	**69.02**	0.57	**0.00**	0.57	0.9	0.26	0.03	0.63	0.52	1.1	0.57	498	**40**	588	5.01	1.10	**0.90**	1.00	9.77E-04	**84.38%**	84.38%	**538**
B	B2.1 & B2.2 & B2.3	**0.57**	**31.65**	0.18	**0.00**	0.18	0.9	0.39	0.03	0.31	0.17	1.1	0.19	157	**40**	588	5.01	1.10	**0.90**	1.00	3.27E-04	**95.11%**	95.11%	**197**
B	B3 & B4	**2.03**	**40.90**	0.83	**0.00**	0.83	0.9	1.20	0.03	0.39	0.78	1.1	0.86	721	**110**	913	8.91	1.10	**0.90**	1.00	9.42E-04	**84.02%**	84.02%	**788**
C	C1.1 & C1.2 & C3	**1.49**	**79.62**	1.19	**0.00**	1.19	0.9	0.31	0.03	0.72	1.08	1.1	1.18	1032	**110**	913	8.91	1.10	**0.90**	1.00	1.30E-03	**80.67%**	80.67%	**1063**
C	C2.1 & C2.2 & C4	**2.13**	**61.31**	1.31	**0.00**	1.31	0.9	0.83	0.03	0.56	1.20	1.1	1.32	1139	**110**	913	8.91	1.10	**0.90**	1.00	1.45E-03	**79.99%**	79.99%	**1170**
D	D1.1 & D1.2	**0.85**	**75.72**	0.64	**0.00**	0.64	0.9	0.21	0.03	0.69	0.58	1.1	0.64	557	**40**	588	5.01	1.10	**0.90**	1.00	1.09E-03	**83.44%**	83.44%	**594**
D	D2.1 & D2.2 & D3	**1.12**	**63.52**	0.71	**0.00**	0.71	0.9	0.41	0.03	0.58	0.65	1.1	0.72	619	**40**	588	5.01	1.10	**0.90**	1.00	1.22E-03	**82.09%**	82.09%	**652**
E	E3 & E4 &E5	**1.17**	**75.35**	0.88	**0.00**	0.88	0.9	0.29	0.03	0.69	0.80	1.1	0.88	767	**110**	913	8.91	1.10	**0.90**	1.00	9.67E-04	**84.27%**	84.27%	**827**

Total TSS Removed by BMP's Annually = 8521
Total Project Required Removal = **8495**

Model	**S.A.**	**By-Pass**	**E.A. @ 80%**
5	100	420	< 0.13
10	149	600	0.14 - 0.20
20	248	1000	0.21 - 0.33
25	369	1440	0.34 - 0.50
40	588	2250	0.51 - 0.79
70	730	2720	0.80 - 0.98
110	913	4000	0.99 - 1.23

WYOMING SPRINGS
SEGMENT 1
ROUND ROCK, TX

ROUND ROCK TEXAS

halff
13620 BRANTWICK DR
BLDG C, STE 100
AUSTIN, TX 78729
(512) 777-4600
TBPELS FIRM #312

Revision No.	Date	Description

F-312 3/14/23
STATE OF TEXAS
JEFFREY L. NAGY
133255
LICENSED PROFESSIONAL ENGINEER

100% SUBMITTAL

Project No.:	36179.002
Issued:	6/24/2023
Drawn By:	SG
Checked By:	JN
Scale:	N.T.S

Sheet Title
WATER QUALITY CALCULATIONS

202
Sheet Number

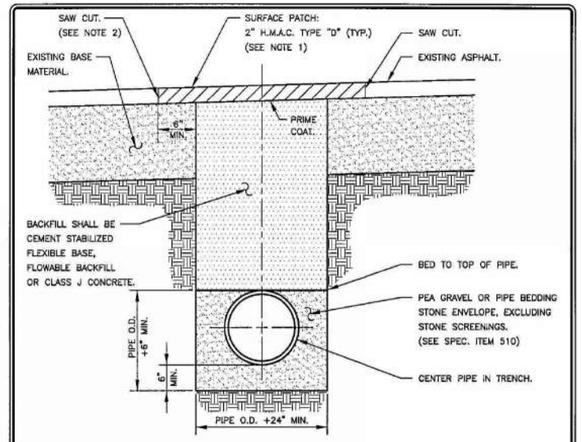

NOTES:

1. H.M.A.C. SHOWN IN THIS DETAIL IS SEPARATE FROM ANY ADDITIONAL THICKNESS CREATED BY ANY OVERLAY ITEM IN CONTRACT.
2. THE CONTRACTOR SHALL SAW CUT, REMOVE AND REPLACE EXISTING PAVEMENT A MINIMUM OF 6" BEYOND EITHER THE EDGE OF THE STORM SEWER TRENCH OR THE POINT WHERE EXISTING PAVEMENT IS DAMAGED DUE TO TRENCHING OPERATIONS, WHICHEVER IS GREATER.
3. INSTALLATION OF BACKFILL, SAW CUTTING AND REMOVAL OF EXISTING PAVEMENT AND SURFACE PATCH, SHALL NOT BE PAID FOR SEPARATELY. COSTS FOR THESE ITEMS SHALL BE INCLUDED IN UNIT PRICE BIDS FOR STORM SEWER PIPE.
4. THE CONTRACTOR SHALL PROVIDE STEEL PLATES TO SPAN THE TRENCH AS NECESSARY OR TO ALLOW BACKFILL TO CURE. SUCH PLATES SHALL BE SUITABLE FOR VEHICLE PASSAGE OVER THE TRENCH AND SHALL BE SATISFACTORILY ANCHORED IN PLACE. COSTS FOR THIS ITEM SHALL BE INCLUDED IN UNIT PRICE BIDS FOR STORM SEWER PIPE.
5. ALL TRENCHING AND TRENCH SAFETY SHALL COMPLY WITH APPLICABLE FEDERAL, STATE AND LOCAL REGULATIONS.

RECORD SIGNED COPY ON FILE AT PUBLIC WORKS	CITY OF ROUND ROCK	DRAWING NO:
APPROVED 08-21-03 DATE	STORM SEWER LINE BEDDING DETAIL (EXISTING PAVED SURFACE)	D-01
THE ARCHITECT/ENGINEER ASSUMES RESPONSIBILITY FOR THE APPROPRIATE USE OF THIS DETAIL.		

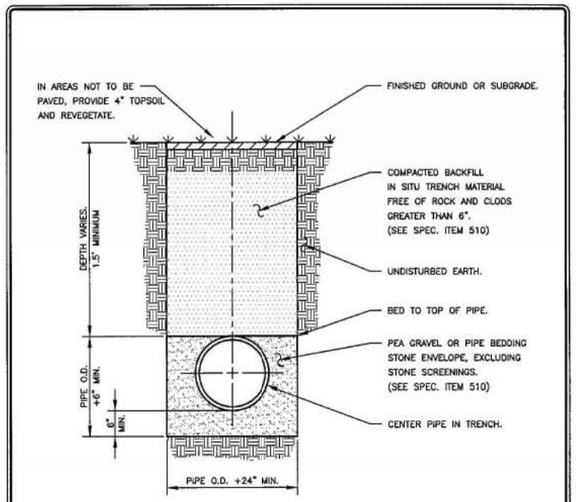

NOTE:

ALL TRENCHING AND TRENCH SAFETY SHALL COMPLY WITH APPLICABLE FEDERAL, STATE AND LOCAL REGULATIONS.

RECORD SIGNED COPY ON FILE AT PUBLIC WORKS	CITY OF ROUND ROCK	DRAWING NO:
APPROVED 08-21-03 DATE	STORM SEWER LINE BEDDING DETAIL (NON-PAVED SURFACE)	D-02
THE ARCHITECT/ENGINEER ASSUMES RESPONSIBILITY FOR THE APPROPRIATE USE OF THIS DETAIL.		

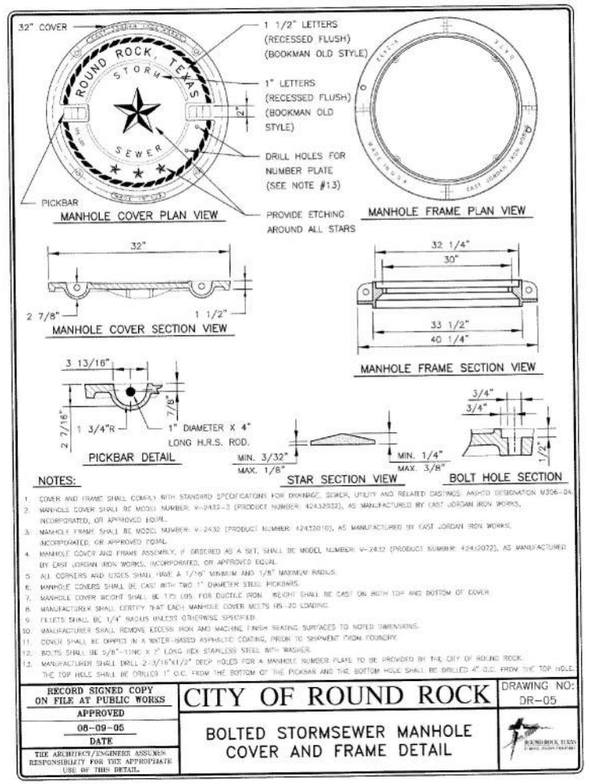

NOTES:

1. COVER AND FRAME SHALL COMPLY WITH STANDARD SPECIFICATIONS FOR DRAINAGE, SEWER, UTILITY AND RELATED CASTINGS, AASHTO DESIGNATION M306-04.
2. MANHOLE COVER SHALL BE MODEL NUMBER V-2433-3 (PRODUCT NUMBER: 42432032), AS MANUFACTURED BY EAST JORDAN IRON WORKS, INCORPORATED, OR APPROVED EQUAL.
3. MANHOLE FRAME SHALL BE MODEL NUMBER: V-2432 (PRODUCT NUMBER: 42430010), AS MANUFACTURED BY EAST JORDAN IRON WORKS, INCORPORATED, OR APPROVED EQUAL.
4. MANHOLE COVER AND FRAME ASSEMBLY, IF ORDERED AS A SET, SHALL BE MODEL NUMBER: V-2432 (PRODUCT NUMBER: 42410032), AS MANUFACTURED BY EAST JORDAN IRON WORKS, INCORPORATED, OR APPROVED EQUAL.
5. ALL CORNERS AND EDGES SHALL HAVE A 1/16" MINIMUM AND 1/8" MAXIMUM RADIUS.
6. MANHOLE COVERS SHALL BE CAST WITH TWO 1" DIAMETER STEEL PICKBARS.
7. MANHOLE COVER WEIGHT SHALL BE 135 LBS. FOR DUCTILE IRON. WEIGHT SHALL BE CAST ON BOTH TOP AND BOTTOM OF COVER.
8. MANUFACTURER SHALL CERTIFY THAT EACH MANHOLE COVER MEETS HS-20 LOADING.
9. FILLETS SHALL BE 1/4" RADIUS UNLESS OTHERWISE SPECIFIED.
10. MANUFACTURER SHALL REMOVE EXCESS IRON AND MACHINE FINISH SEATING SURFACES TO NOTED DIMENSIONS.
11. COVER SHALL BE DIPPED IN A WATER-BASED ASPHALTIC COATING, PRIOR TO SHIPMENT FROM FOUNDRY.
12. BOLTS SHALL BE 5/8"-11UNC X 3" LONG HEX STAINLESS STEEL WITH WASHER.
13. MANUFACTURER SHALL DRILL 2-3/16"X1/2" DEEP HOLES FOR A MANHOLE NUMBER PLATE TO BE PROVIDED BY THE CITY OF ROUND ROCK. THE TOP HOLE SHALL BE DRILLED 1" O.C. FROM THE BOTTOM OF THE PICKBAR AND THE BOTTOM HOLE SHALL BE DRILLED 4" O.C. FROM THE TOP HOLE.

RECORD SIGNED COPY ON FILE AT PUBLIC WORKS	CITY OF ROUND ROCK	DRAWING NO:
APPROVED 08-09-05 DATE	BOLTED STORMSEWER MANHOLE COVER AND FRAME DETAIL	DR-05
THE ARCHITECT/ENGINEER ASSUMES RESPONSIBILITY FOR THE APPROPRIATE USE OF THIS DETAIL.		

NOTE: CONTRACTOR TO INSTALL CITY OF ROUND ROCK STORM SEWER INLET COVER AND FRAME PER CITY DETAIL DR-07.

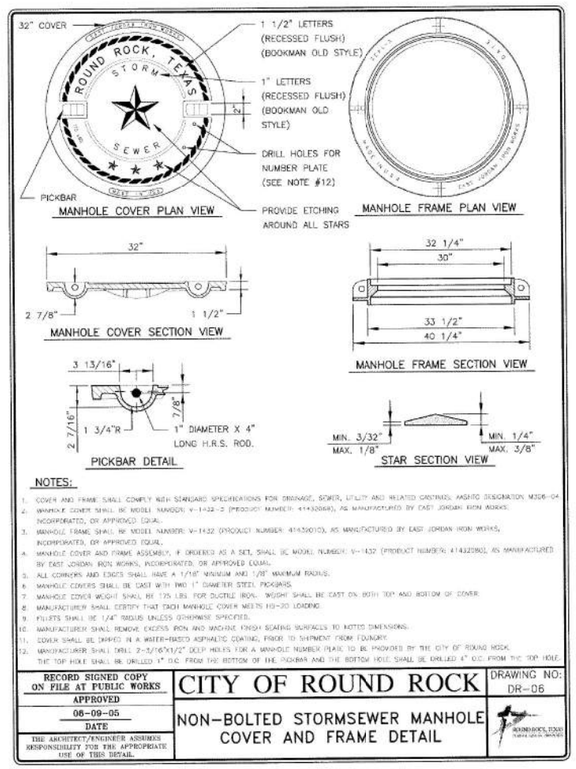

NOTES:

1. COVER AND FRAME SHALL COMPLY WITH STANDARD SPECIFICATIONS FOR DRAINAGE, SEWER, UTILITY AND RELATED CASTINGS: AASHTO DESIGNATION M306-04
2. MANHOLE COVER SHALL BE MODEL NUMBER: V-2433-2 (PRODUCT NUMBER: 42432032), AS MANUFACTURED BY EAST JORDAN IRON WORKS, INCORPORATED, OR APPROVED EQUAL.
3. MANHOLE FRAME SHALL BE MODEL NUMBER: V-2432 (PRODUCT NUMBER: 42430010), AS MANUFACTURED BY EAST JORDAN IRON WORKS, INCORPORATED, OR APPROVED EQUAL.
4. MANHOLE COVER AND FRAME ASSEMBLY, IF ORDERED AS A SET, SHALL BE MODEL NUMBER: V-2432 (PRODUCT NUMBER: 42410032), AS MANUFACTURED BY EAST JORDAN IRON WORKS, INCORPORATED, OR APPROVED EQUAL.
5. ALL CORNERS AND EDGES SHALL HAVE A 1/16" MINIMUM AND 1/8" MAXIMUM RADIUS.
6. MANHOLE COVERS SHALL BE CAST WITH TWO 1" DIAMETER STEEL PICKBARS.
7. MANHOLE COVER WEIGHT SHALL BE 135 LBS. FOR DUCTILE IRON. WEIGHT SHALL BE CAST ON BOTH TOP AND BOTTOM OF COVER.
8. MANUFACTURER SHALL CERTIFY THAT EACH MANHOLE COVER MEETS HS-20 LOADING.
9. FILLETS SHALL BE 1/4" RADIUS UNLESS OTHERWISE SPECIFIED.
10. MANUFACTURER SHALL REMOVE EXCESS IRON AND MACHINE FINISH SEATING SURFACES TO NOTED DIMENSIONS.
11. COVER SHALL BE DIPPED IN A WATER-BASED ASPHALTIC COATING, PRIOR TO SHIPMENT FROM FOUNDRY.
12. BOLTS SHALL BE 5/8"-11UNC X 3" LONG HEX STAINLESS STEEL WITH WASHER.
13. MANUFACTURER SHALL DRILL 2-3/16"X1/2" DEEP HOLES FOR A MANHOLE NUMBER PLATE TO BE PROVIDED BY THE CITY OF ROUND ROCK. THE TOP HOLE SHALL BE DRILLED 1" O.C. FROM THE BOTTOM OF THE PICKBAR AND THE BOTTOM HOLE SHALL BE DRILLED 4" O.C. FROM THE TOP HOLE.

RECORD SIGNED COPY ON FILE AT PUBLIC WORKS	CITY OF ROUND ROCK	DRAWING NO:
APPROVED 08-09-05 DATE	NON-BOLTED STORMSEWER MANHOLE COVER AND FRAME DETAIL	DR-06
THE ARCHITECT/ENGINEER ASSUMES RESPONSIBILITY FOR THE APPROPRIATE USE OF THIS DETAIL.		

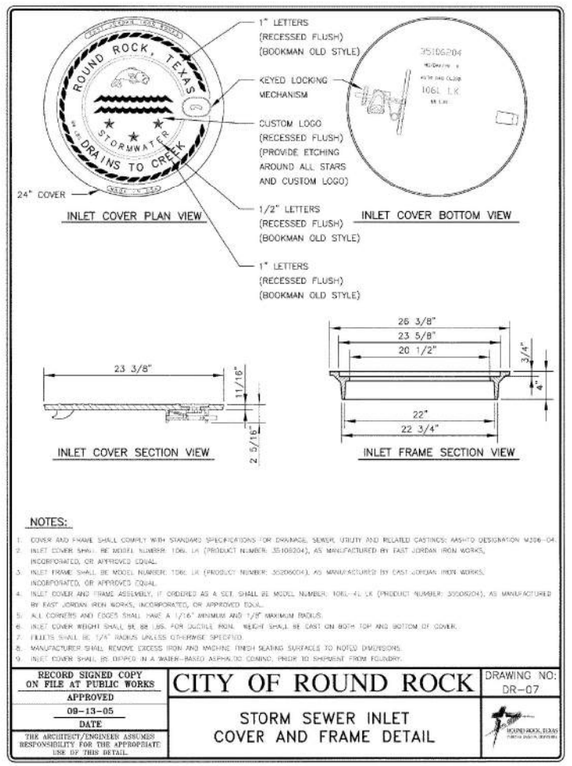

NOTES:

1. COVER AND FRAME SHALL COMPLY WITH STANDARD SPECIFICATIONS FOR DRAINAGE, SEWER, UTILITY AND RELATED CASTINGS: AASHTO DESIGNATION M306-04
2. INLET COVER SHALL BE MODEL NUMBER: 1086 LX (PRODUCT NUMBER: 35086004), AS MANUFACTURED BY EAST JORDAN IRON WORKS, INCORPORATED, OR APPROVED EQUAL.
3. INLET FRAME SHALL BE MODEL NUMBER: 1086 LX (PRODUCT NUMBER: 35086004), AS MANUFACTURED BY EAST JORDAN IRON WORKS, INCORPORATED, OR APPROVED EQUAL.
4. INLET COVER AND FRAME ASSEMBLY, IF ORDERED AS A SET, SHALL BE MODEL NUMBER: 1061-4 LX (PRODUCT NUMBER: 35006004), AS MANUFACTURED BY EAST JORDAN IRON WORKS, INCORPORATED, OR APPROVED EQUAL.
5. ALL CORNERS AND EDGES SHALL HAVE A 1/16" MINIMUM AND 1/8" MAXIMUM RADIUS.
6. INLET COVER WEIGHT SHALL BE 185 LBS. FOR DUCTILE IRON. WEIGHT SHALL BE CAST ON BOTH TOP AND BOTTOM OF COVER.
7. FILLETS SHALL BE 1/4" RADIUS UNLESS OTHERWISE SPECIFIED.
8. MANUFACTURER SHALL REMOVE EXCESS IRON AND MACHINE FINISH SEATING SURFACES TO NOTED DIMENSIONS.
9. INLET COVER SHALL BE DIPPED IN A WATER-BASED ASPHALTIC COMPND. PRIOR TO SHIPMENT FROM FOUNDRY.

RECORD SIGNED COPY ON FILE AT PUBLIC WORKS	CITY OF ROUND ROCK	DRAWING NO:
APPROVED 08-13-05 DATE	STORM SEWER INLET COVER AND FRAME DETAIL	DR-07
THE ARCHITECT/ENGINEER ASSUMES RESPONSIBILITY FOR THE APPROPRIATE USE OF THIS DETAIL.		

BAFFLE BLOCK DETAIL (PLAN VIEW) N.T.S

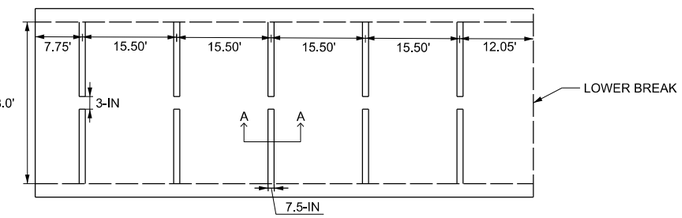

BAFFLE BLOCK DETAIL (SECTION A-A) N.T.S

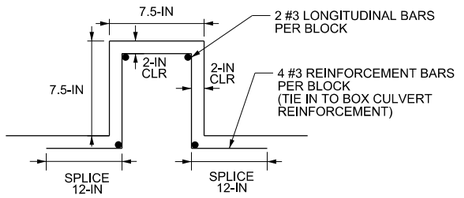

NOTES:

1. CONCRETE SHALL BE CLADD "A" WITH A MINIMUM COMPRESSIVE STRENGTH OF 3,000 PSI UNLESS NOTED ELSEWHERE IN PLANS.
2. ALL REINFORCING STEEL SHALL BE GRADE 60.
3. LAP REINFORCING 30 BAR DIAMETERS MIN. AT SLICES UNLESS NOTED.
4. CHAMBER EXPOSED EDGES OF CONCRETE 3/4- IN, UNLESS NOTED.
5. PLACE REINFORCING WITH THE CENTER OF THE OUTSIDE BARS 2 INCHES FROM THE SURFACE OF THE CONCRETE.

WYOMING SPRINGS
SEGMENT 1
ROUND ROCK, TX

ROUND ROCK TEXAS

halff
13620 BRAKVICK DR
BLDG C, STE 100
AUSTIN, TX 78729
(512) 777-4600
TBPELS FIRM #312

Revision No.	Date	Description
.	.	.
.	.	.
.	.	.
.	.	.
.	.	.
.	.	.
.	.	.

F-312 4/5/23
STATE OF TEXAS
JEFFREY L NAGY
133255
LICENSED
PROFESSIONAL ENGINEER

100% SUBMITTAL

Project No.:	36179.002
Issued:	4/17/2023
Drawn By:	SG
Checked By:	JN
Scale:	N.T.S

Sheet Title
MISCELLANEOUS DRAINAGE DETAILS

203
Sheet Number

TABLE OF DIMENSIONS AND REINFORCING STEEL
(Wings for one structure end)

Dimensions					Variable Reinforcing				Estimated Quantities per ft of wing length (2~wings) (3)	
					Bars J1		Bars J2			
Maximum Wingwall Height Hw	W	X	Y	Z	Size	Spa	Size	Spa	Reinf (Lb/Ft)	Conc (CY/Ft)
2'-6"	2'-5"	1'-0"	9"	7"	#4	1'-0"	#4	1'-0"	33.73	0.248
3'-0"	2'-5"	1'-0"	9"	7"	#4	1'-0"	#4	1'-0"	37.07	0.261
3'-6"	2'-5"	1'-0"	9"	7"	#4	1'-0"	#4	1'-0"	37.74	0.273
4'-0"	2'-5"	1'-0"	9"	7"	#4	1'-0"	#4	1'-0"	38.41	0.285
4'-6"	3'-2"	1'-6"	1'-0"	7"	#4	1'-0"	#4	1'-0"	41.75	0.330
5'-0"	3'-2"	1'-6"	1'-0"	7"	#4	1'-0"	#4	1'-0"	45.09	0.343
5'-6"	3'-2"	1'-6"	1'-0"	7"	#4	1'-0"	#4	1'-0"	45.75	0.355
6'-0"	3'-2"	1'-6"	1'-0"	7"	#4	1'-0"	#4	1'-0"	46.42	0.367
7'-0"	3'-8"	1'-9"	1'-3"	7"	#4	1'-0"	#4	1'-0"	52.77	0.414
8'-0"	4'-2"	2'-0"	1'-6"	8"	#5	1'-0"	#4	1'-0"	60.19	0.486
9'-0"	4'-8"	2'-3"	1'-9"	8"	#4	6"	#4	6"	81.49	0.535
10'-0"	5'-2"	2'-6"	2'-0"	8"	#5	6"	#4	6"	97.25	0.584
11'-0"	5'-8"	2'-9"	2'-3"	8"	#6	6"	#5	6"	133.65	0.634
12'-0"	6'-2"	3'-0"	2'-6"	9"	#7	6"	#5	6"	162.29	0.721
13'-0"	6'-8"	3'-3"	2'-9"	11"	#7	6"	#5	6"	178.80	0.856
14'-0"	7'-2"	3'-6"	3'-0"	1'-0"	#8	6"	#5	6"	216.78	0.959
15'-0"	7'-8"	4'-0"	3'-0"	1'-1"	#9	6"	#6	6"	283.06	1.068
16'-0"	8'-2"	4'-6"	3'-0"	1'-3"	#9	6"	#6	6"	297.02	1.234

TABLE OF WINGWALL REINFORCING
(2~wings)

Bar	Size	No.	Spa
DL	#5	~	1'-0"
DS	#5	~	1'-0"
E	#4	~	1'-0"
F	#4	~	1'-0"
G	#6	4	~
M	#4	4	~
P	#4	~	1'-0"
RS	#5	3	~
RL	#5	3	~
V	#4	~	1'-0"

TABLE OF ESTIMATED CULVERT TOEWALL QUANTITIES

Bar	Size	No.	Spa
L	#4	~	1'-6"
Q	#4	1	~
Reinf (Lb/Ft)			2.45
Conc (CY/Ft)			0.037

WING DIMENSION FORMULAS:

(All values are in feet.)

Hw = H + T + C – 0.250'
A = (Hw – 0.333')(Sc)
B = (A) [tanget (θ + 15°)]
Lw = (A) ÷ [cosine (θ + 15°)]

For cast-in-place culverts:
Ltw = [(N) (S) + (N + 1) (U)] ÷ cosine θ

For precast culverts:
Ltw = [(N) (2U + S) + (N – 1) (0.5')] ÷ cosine θ

Total wingwall area (two wings ~ SF) = 0.5 (Hw + 0.333') (Lw + A)

Hw = Height of wingwall
SL:1 = Side slope ratio (horizontal:1 vertical)
A = Length of short wingwalls
Lw = Length of long wingwall
Ltw = Culvert toewall length
N = Number of culvert spans
θ = Culvert skew

See applicable box culvert standard sheet for H, S, T, and U values.

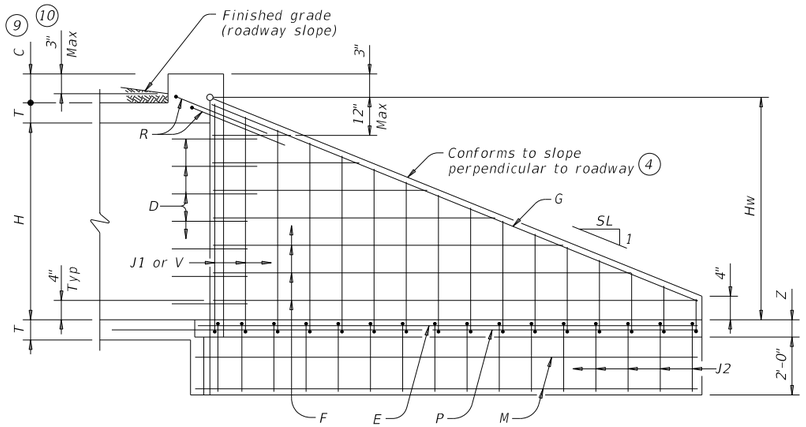

INSIDE ELEVATION

(Showing reinforcing. Culvert and culvert toewall reinforcing not shown for clarity.)

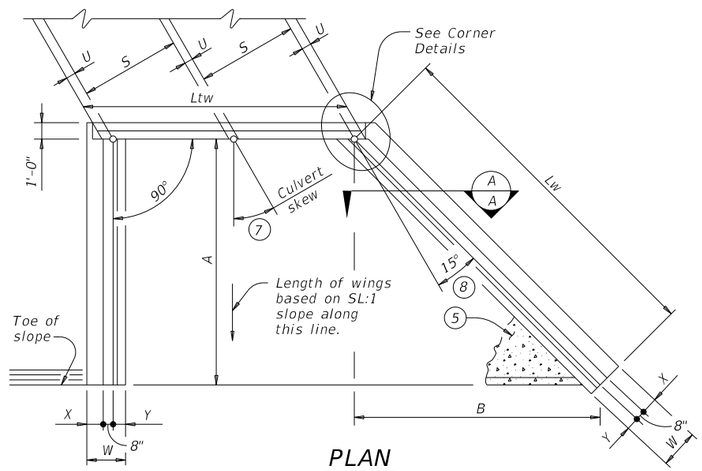

PLAN

(Showing dimensions and 30° skew.)

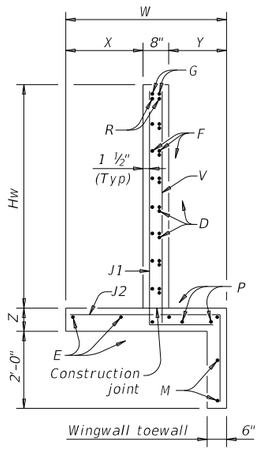

SECTION A-A

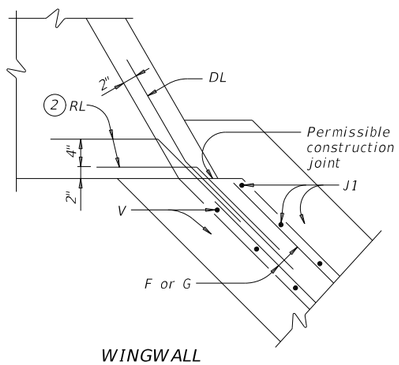

WINGWALL

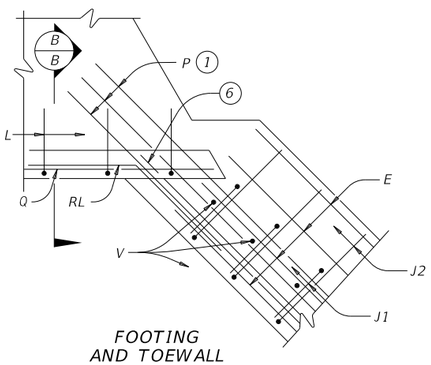

FOOTING AND TOEWALL

CORNER DETAILS

(Culvert and culvert toewall reinforcing not shown for clarity.)

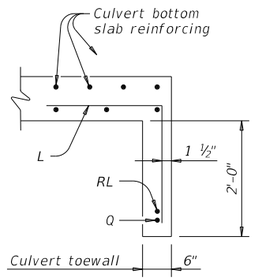

SECTION B-B (5)

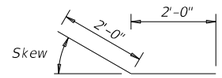

BARS DS
(Short wing)

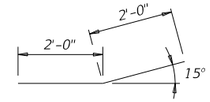

BARS DL
(Long wing)

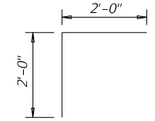

BARS RS
(Short wing)

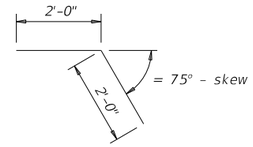

BARS RL
(Long wing)

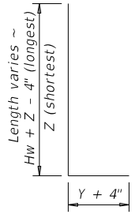

BARS J1

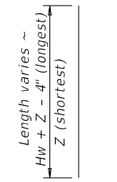

BARS V

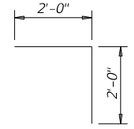

BARS L

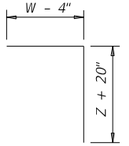

BARS J2

(1) Extend Bars P 3'-0" minimum into bottom slab of box culvert.

(2) Adjust as necessary to maintain 1 1#2" clear cover and 4" minimum between bars.

(3) Quantities shown are based on an average wing height for two wings (one structure end). To determine total quantities for two wings, multiply the tabulated values by 0.5 x (A + Lw).

(4) Recommended values of side slope are: 2:1, 3:1, 4:1, and 6:1.

(5) When shown elsewhere on the plans, construct 5" deep concrete riprap. Payment for riprap is as required by Item 432, "Riprap". Unless otherwise shown on the plans or directed by the Engineer, provide a 6" wide by 1'-6" deep reinforced concrete toewall along all edges of the riprap adjacent to natural ground; reinforce the toewall by extending typical riprap reinforcing into the toewall; and extend construction joints or grooved joints oriented in the direction of flow across the full distance of the riprap at intervals of approximately 20'. When such riprap is provided, the culvert toewall shown in SECTION B-B will not be required.

(6) At Contractor's option, culvert toewall may be ended flush with wingwall toewall. Adjust reinforcing as needed.

(7) Applicable values of skew are: 15°, 30°, and 45°.

(8) Typical wingwall angle for all skews.

(9) 0" Min to 5'-0" Max. Estimated curb heights are shown elsewhere in the plans. For structures with pedestrian rail or curbs taller than 1'-0, refer to the Extended Curb Details (ECD) standard sheet. For structures with T631 or T631LS bridge rail, refer to the Mounting Details for T631 & T631LS Rails (T631-CM) standard sheet. Refer to the Box Culvert Rail Mounting Details (RAC) standard sheet for structures with bridge rail other than T631 or T631LS.

(10) For vehicle safety, the following requirements must be met:
- For structures without bridge rail, construct curbs no more than 3" above finished grade.
- For structures with bridge rail, construct curbs flush with finished grade.

Reduce curb heights, if necessary, to meet the above requirements. No changes will be made in quantities and no additional compensation will be allowed for this work.

MATERIAL NOTES:

Provide Class C concrete (f'c=3,600 psi).
Provide Grade 60 reinforcing steel.
Provide galvanized reinforcing steel if required elsewhere in the plans.
In riprap concrete, synthetic fibers listed on the "Fibers for Concrete" Material Producer List (MPL) may be used in lieu of steel reinforcing in riprap concrete unless noted otherwise.

GENERAL NOTES:

Designed according to AASHTO LRFD Bridge Design Specifications.
When structure is founded on solid rock, depth of toewalls for culverts and wingwalls may be reduced or eliminated as directed by the Engineer.
See Box Culvert Supplement (BCS) standard sheet for additional dimensions and information.
The quantities for concrete and reinforcing steel resulting from the formulas given on this sheet are for Contractor's information only.

Cover dimensions are clear dimensions, unless noted otherwise.
Reinforcing dimensions are out-to-out of bars.

Texas Department of Transportation

Bridge Division Standard

CONCRETE WINGWALLS WITH FLARED WINGS FOR SKEWED BOX CULVERTS

FW-S

FILE: fw-sstde-20.dgn	DN: GAF	CK: CAT	DW: TxDOT	CK: TxDOT
©TxDOT February 2020	CONT	SECT	JOB	HIGHWAY
REVISIONS				
	DIST	COUNTY		SHEET NO.
				204

DISCLAIMER:
The use of this standard is governed by the "Texas Engineering Practice Act". No warranty of any kind is made by TxDOT for any purpose whatsoever. TxDOT assumes no responsibility for the conversion of this standard to other formats or for incorrect results or damages resulting from its use.

DATE:
FILE:

DISCLAIMER:
The use of this standard is governed by the "Texas Engineering Practice Act". No warranty of any kind is made by TxDOT for any purpose whatsoever. TxDOT assumes no responsibility for the conversion of this standard to other formats or for incorrect results or damages resulting from its use.

DATE:
FILE:

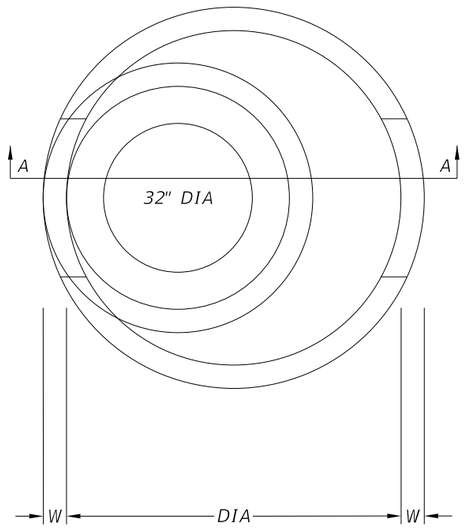

PLAN VIEW "A"

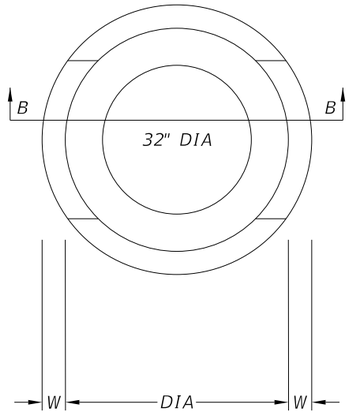

PLAN VIEW "B"

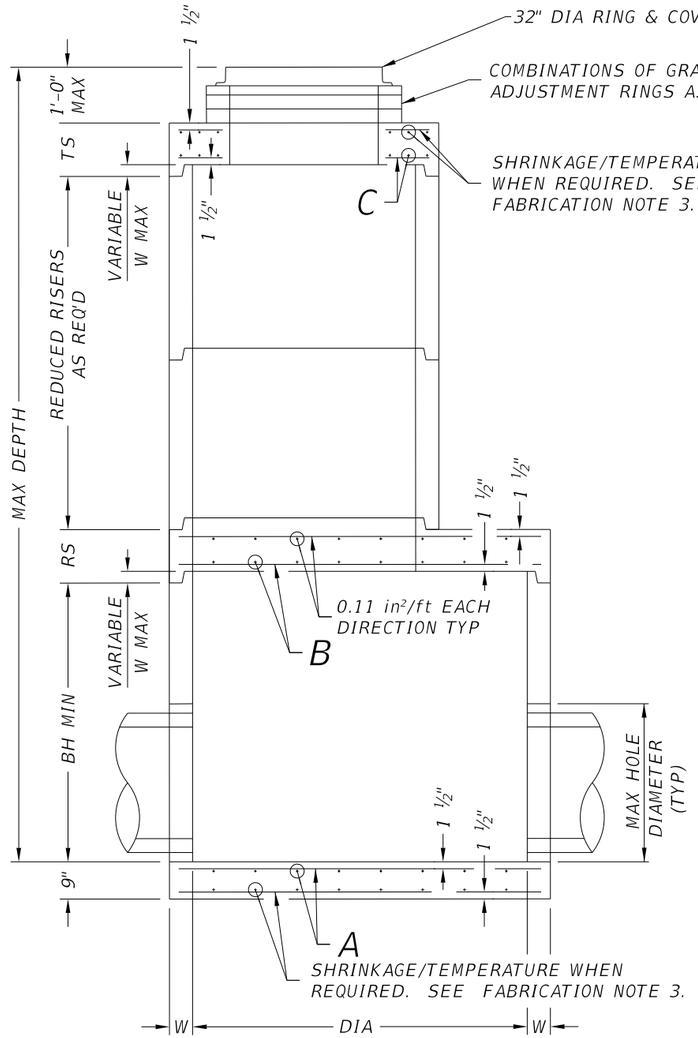

SECTION A-A

ROUND REDUCED RISER OPTION
SHOWING FLAT SLAB TOP

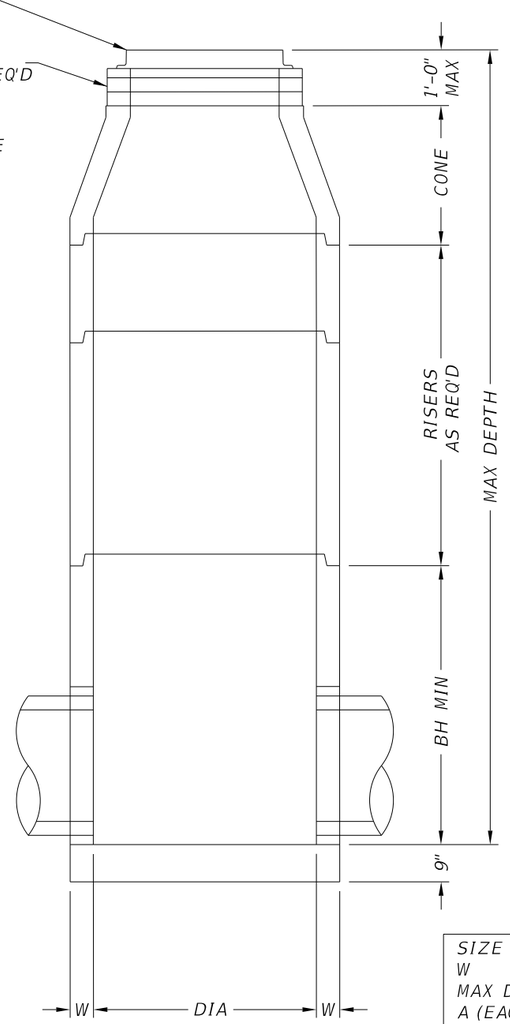

SECTION B-B

ROUND RISER OPTION
SHOWING CONE

FABRICATION NOTES:

1. Provide Class "H" concrete in accordance with Item 421 and having a minimum compressive strength of 5,000 psi.
2. Provide Grade 60 reinforcing steel or equivalent area of WWR. Provide circumferential reinforcing steel in vertical walls of base, riser and cone in accordance with ASTM C478.
3. Slabs with a thickness of 8" or greater require shrinkage and temperature reinforcing steel. Provide steel area = 0.11 in²/ft each way.
4. Manufacture base and risers to nearest 3" increment.
5. Design tongue and groove joints for full closure on both shoulders. Minimum spigot depth is ¾".
6. Provide lifting devices in conformance with Manufacturer's recommendations.
7. Provide cast iron solid cover, unless noted otherwise elsewhere in the plans.

INSTALLATION NOTES:

1. Cones may be concentric or eccentric. Reduction cones are acceptable. See Manufacturer for cone dimensions.
2. Inverts (benching) to be provided by Contractor. Concrete or mortar used for invert is subsidiary to this item.
3. Seal tongue and groove joints with preformed or bulk mastic in conformance with Manufacturer's recommendations. Tongue and groove joints may be grouted no more than 1" between each section, or ½ the joint depth, whichever is greater.
4. Do not grout rubber gasket joints without Manufacturer's recommendation.
5. Initial installation of grade adjustment rings is limited to 1'-0" Max as shown.
6. Grade adjustment rings may be increased to 2'-0" Max when future construction affects final grade of structure. Make adjustments greater than 2'-0" with additional risers. Adjustments may be made up to the Max depth shown. Structure must be evaluated if Max depth will be exceeded.

GENERAL NOTES:

1. Designed according to ASTM C478.
2. Payment for manhole is per Item 465, "Junction Boxes, Manholes, and Inlets" by type and size.
3. Pipe OD + placement tolerance must be equal or less than Max hole diameter. For rigid pipe, placement tolerance is 4" Max, 2" Min. For flexible pipe, consult boot/seal manufacturer's specification for placement tolerance.

Cover dimensions are clear dimensions, unless noted otherwise.

SIZE (DIA)	48 in	60 in	72 in
W	5 in	6 in	7 in
MAX DEPTH	25 ft	25 ft	25 ft
A (EACH WAY)	0.22 in²/ft	0.30 in²/ft	0.45 in²/ft
B (EACH WAY)	N/A	0.37 in²/ft	0.62 in²/ft
C (EACH WAY)	0.24 in²/ft	0.46 in²/ft	0.46 in²/ft
BH MIN	12 in	36 in	36 in
TS	9 in	9 in	9 in
RS	N/A	9 in	12 in
REDUCED RISER DIA	N/A	48 in	48/60 in
MAX HOLE DIA	32 in	40 in	54 in

HL93 LOADING

Texas Department of Transportation

Bridge Division Standard

PRECAST ROUND MANHOLE

PRM

FILE: prestd02-20.dgn	DN: TxDOT	CK: TxDOT	DW: TxDOT	CK: TxDOT
©TxDOT February 2020	CONT	SECT	JOB	HIGHWAY
REVISIONS	DIST	COUNTY		SHEET NO.
				205

DISCLAIMER:
The use of this standard is governed by the "Texas Engineering Practice Act". No warranty of any kind is made by TxDOT for any purpose whatsoever. TxDOT assumes no responsibility for the conversion of this standard to other formats or for incorrect results or damages resulting from its use.

DATE:
FILE:

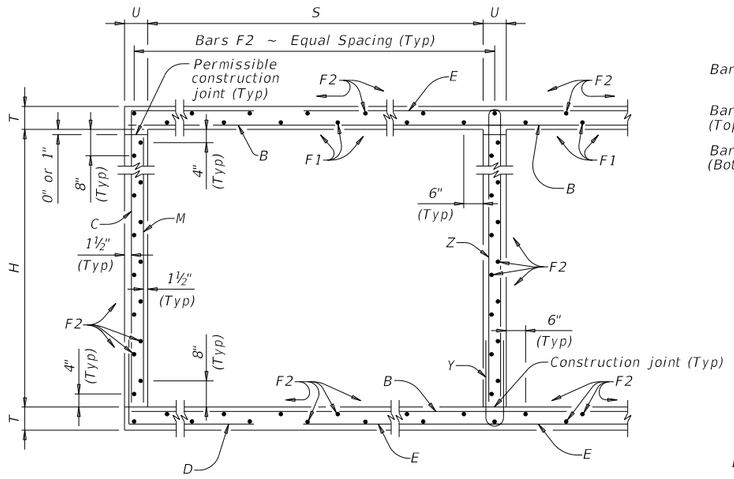

TYPICAL SECTION

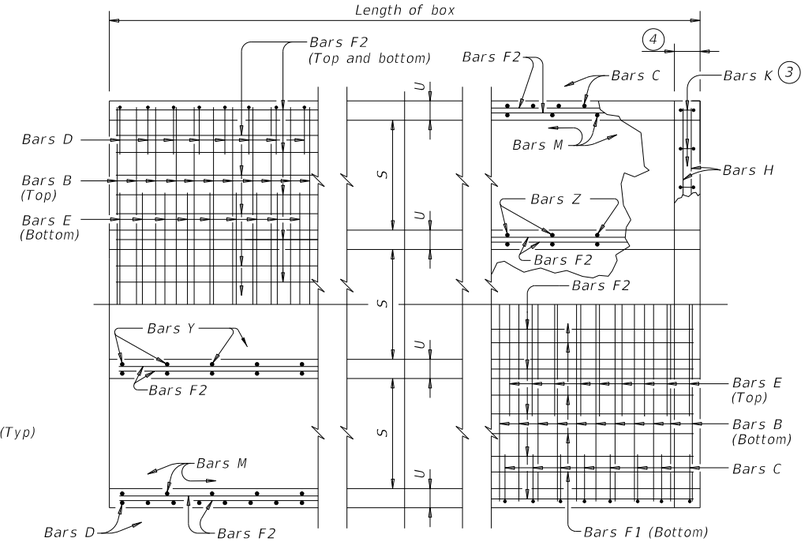

BOTTOM SLAB

TOP SLAB

PART PLANS

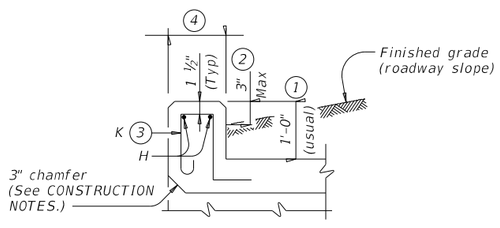

SECTION THRU CURB

TABLE OF BAR DIMENSIONS		
H	"X"	"Y"
3'-0"	3'-7 ½"	5'-1 ½"
4'-0"	4'-7 ½"	5'-1 ½"
5'-0"	5'-7 ½"	5'-1 ½"
6'-0"	6'-7 ½"	5'-1 ½"
7'-0"	7'-7 ½"	5'-1 ½"
8'-0"	8'-7 ½"	5'-1 ½"

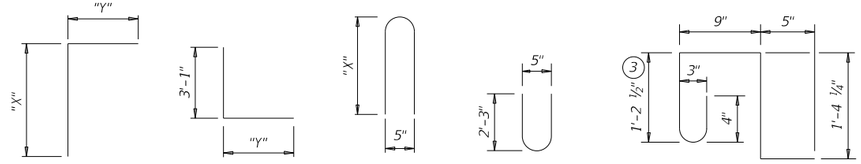

(1) 0" Min to 5'-0" Max. Estimated curb heights are shown elsewhere in the plans. For structures with pedestrian rail or curbs taller than 1'-0", refer to the Extended Curb Details (ECD) standard sheet. For structures with T631 or T631LS bridge rail, refer to the Mounting Details for T631 & T631LS Rails (T631-CM) standard sheet. Refer to the Rail Anchorage Curb (RAC) standard sheet for structures with bridge rail other than T631 or T631LS.

(2) For vehicle safety, the following requirements must be met:
- For structures without bridge rail, construct curbs no more than 3" above finished grade.
- For structures with bridge rail, construct curbs flush with finished grade.

Reduce curb heights, if necessary, to meet the above requirements. No changes will be made in quantities and no additional compensation will be allowed for this work.

(3) For curbs less than 1'-0" high, tilt Bars K or reduce bar height as necessary to maintain cover. For curbs less than 3" high, Bars K may be omitted.

(4) 1'-0" typical. 2'-3" when the Rail Anchorage Curb (RAC) standard sheet is referred to elsewhere in the plans.

The Contractor may replace Bars B, C, D, E, F1, F2, M, Y, and/or Z with deformed welded wire reinforcement (WWR) meeting the requirements of ASTM A1064. The area of required reinforcement may be reduced by the ratio of 60 ksi / 70 ksi. Spacing of WWR is limited to 4" Min and 18" Max. When required, provide lap splices in the WWR of the same length required for the equivalent bar size, rounded up for wire sizes between conventional bar sizes. The lap length required for WWR is never less than the lap length required for uncoated #4 bars.

Example conversion: Replacing No. 6 Gr 60 at 6" Spacing with WWR
Required WWR = (0.44 sq. in. per 0.5 ft.) x (60 ksi / 70 ksi) = 0.755 sq. in. per ft.
If D30.6 wire is used to meet the 0.755 sq. in. per ft. requirement in this example, the required spacing = (0.306 sq. in.) / (0.755 sq. in. per ft.) x (12 in. per ft.) = 4.86"
Max spacing. Required lap length for the provided D30.6 wire is 2'-1" (the same minimum lap length required for uncoated #5 bars, as listed under MATERIAL NOTES).

CONSTRUCTION NOTES:
Do not use permanent forms.
Chamfer the bottom edge of the top slab 3" at the entrance.
Optionally, raise construction joints shown at the flow line by a maximum of 6". If this option is taken, Bars M may be cut off or raised, Bars C and D may be reversed, and Bars Y and Z may be reversed.

MATERIAL NOTES:
Provide Grade 60 reinforcing steel.
Provide galvanized reinforcing steel if required elsewhere in the plans.
Provide Class C concrete (f'c = 3,600 psi) for culvert barrel and curb.
Provide bar laps, where required, as follows:
- Uncoated or galvanized ~ #4 = 1'-8" Min
- Uncoated or galvanized ~ #5 = 2'-1" Min
- Uncoated or galvanized ~ #6 = 2'-6" Min

GENERAL NOTES:
Designed according to AASHTO LRFD Bridge Design Specifications for the range of fill heights shown.
See the Multiple Box Culverts Cast-In-Place Miscellaneous Detail (MC-MD) standard sheet for details pertaining to skewed ends, angle sections, and lengthening.

Cover dimensions are clear dimensions, unless noted otherwise.
Reinforcing bar dimensions shown are out-to-out of bar.

HL93 LOADING

SHEET 1 OF 2

Texas Department of Transportation

Bridge Division Standard

MULTIPLE BOX CULVERTS CAST-IN-PLACE
8'-0" SPAN
2' TO 16' FILL

MC-8-16

FILE: mc816ste-20.dgn	DN: TBE	CK: BMP	DW: TxDOT	CK: TxDOT
©TxDOT February 2020	CONT	SECT	JOB	HIGHWAY
REVISIONS				
	DIST	COUNTY		SHEET NO.
				206

NUMBER OF SPANS	SECTION DIMENSIONS				BILLS OF REINFORCING STEEL (For Box Length = 40 feet)																																		QUANTITIES					
					Bars B					Bars C & D							Bars E					Bars F1 ~ #4				Bars F2 ~ #4				Bars M ~ #4				Bars Y & Z ~ #4						Bars H 4 ~ #4		Bars K		Per Foot of Barrel		Curb		Total	
													Bars C		Bars D																				Bars Y		Bars Z											
	S	H	T	U	No.	Size	Spa	Length	Wt	No.	Size	Spa	Length	Wt	Length	Wt	No.	Size	Spa	Length	Wt	No.	Spa	Length	Wt	No.	Spa	Length	Wt	No.	Spa	Length	Wt	No.	Spa	Length	Wt	No.	Spa	Length	Wt	Length	Wt	No.	Wt	Conc (CY)	Renf (Lb)	Conc (CY)	Renf (Lb)	Conc (CY)	Renf (Lb)
2	8' – 0"	3' – 0"	9"	8"	162	#6	6"	17' – 9"	4,319	108	#6	9"	8' – 9"	1,419	8' – 3"	1,338	162	#6	6"	8' – 3"	2,007	12	18"	39' – 9"	319	56	18"	39' – 9"	1,487	82	12"	3' – 0"	164	41	12"	4' – 10"	132	7' – 6"	205	17' – 9"	47	38	106	1.222	284.8	1.3	153	50.2	11,543
3	8' – 0"	3' – 0"	9"	8"	162	#6	6"	26' – 5"	6,428	108	#6	9"	8' – 9"	1,419	8' – 3"	1,338	162	#6	6"	16' – 3"	3,954	18	18"	39' – 9"	478	80	18"	39' – 9"	2,124	82	12"	3' – 0"	164	82	12"	4' – 10"	265	7' – 6"	411	26' – 5"	71	56	156	1.778	414.5	2.0	227	73.1	16,808
4	8' – 0"	3' – 0"	9"	8"	162	#6	6"	35' – 1"	8,537	108	#6	9"	8' – 9"	1,419	8' – 3"	1,338	162	#6	6"	24' – 3"	5,901	24	18"	39' – 9"	637	104	18"	39' – 9"	2,762	82	12"	3' – 0"	164	123	12"	4' – 10"	397	7' – 6"	616	35' – 1"	94	74	206	2.333	544.3	2.6	300	95.9	22,071
5	8' – 0"	3' – 0"	9"	8"	162	#6	6"	43' – 9"	10,645	108	#6	9"	8' – 9"	1,419	8' – 3"	1,338	162	#6	6"	32' – 3"	7,847	30	18"	39' – 9"	797	128	18"	39' – 9"	3,399	82	12"	3' – 0"	164	164	12"	4' – 10"	530	7' – 6"	822	43' – 9"	117	90	251	2.889	674.0	3.2	368	118.8	27,329
6	8' – 0"	3' – 0"	9"	8"	162	#6	6"	52' – 5"	12,754	108	#6	9"	8' – 9"	1,419	8' – 3"	1,338	162	#6	6"	40' – 3"	9,794	36	18"	39' – 9"	956	152	18"	39' – 9"	4,036	82	12"	3' – 0"	164	205	12"	4' – 10"	662	7' – 6"	1,027	52' – 5"	140	108	301	3.444	803.8	3.9	441	141.6	32,591
2	8' – 0"	4' – 0"	9"	8"	162	#6	6"	17' – 9"	4,319	108	#6	9"	9' – 9"	1,582	8' – 3"	1,338	162	#6	6"	8' – 3"	2,007	12	18"	39' – 9"	319	56	18"	39' – 9"	1,487	82	12"	4' – 0"	219	41	12"	4' – 10"	132	9' – 6"	260	17' – 9"	47	38	106	1.296	291.6	1.3	153	53.2	11,816
3	8' – 0"	4' – 0"	9"	8"	162	#6	6"	26' – 5"	6,428	108	#6	9"	9' – 9"	1,582	8' – 3"	1,338	162	#6	6"	16' – 3"	3,954	18	18"	39' – 9"	478	80	18"	39' – 9"	2,124	82	12"	4' – 0"	219	82	12"	4' – 10"	265	9' – 6"	520	26' – 5"	71	56	156	1.877	422.7	2.0	227	77.0	17,135
4	8' – 0"	4' – 0"	9"	8"	162	#6	6"	35' – 1"	8,537	108	#6	9"	9' – 9"	1,582	8' – 3"	1,338	162	#6	6"	24' – 3"	5,901	24	18"	39' – 9"	637	104	18"	39' – 9"	2,762	82	12"	4' – 0"	219	123	12"	4' – 10"	397	9' – 6"	781	35' – 1"	94	74	206	2.457	553.9	2.6	300	100.9	22,454
5	8' – 0"	4' – 0"	9"	8"	162	#6	6"	43' – 9"	10,645	108	#6	9"	9' – 9"	1,582	8' – 3"	1,338	162	#6	6"	32' – 3"	7,847	30	18"	39' – 9"	797	128	18"	39' – 9"	3,399	82	12"	4' – 0"	219	164	12"	4' – 10"	530	9' – 6"	1,041	43' – 9"	117	90	251	3.037	685.0	3.2	368	124.7	27,766
6	8' – 0"	4' – 0"	9"	8"	162	#6	6"	52' – 5"	12,754	108	#6	9"	9' – 9"	1,582	8' – 3"	1,338	162	#6	6"	40' – 3"	9,794	36	18"	39' – 9"	956	152	18"	39' – 9"	4,036	82	12"	4' – 0"	219	205	12"	4' – 10"	662	9' – 6"	1,301	52' – 5"	140	108	301	3.617	816.1	3.9	441	148.6	33,083
2	8' – 0"	5' – 0"	9"	8"	162	#6	6"	17' – 9"	4,319	108	#6	9"	10' – 9"	1,744	8' – 3"	1,338	162	#6	6"	8' – 3"	2,007	12	18"	39' – 9"	319	62	18"	39' – 9"	1,646	82	12"	5' – 0"	274	41	12"	4' – 10"	132	11' – 6"	315	17' – 9"	47	38	106	1.370	302.4	1.3	153	56.1	12,247
3	8' – 0"	5' – 0"	9"	8"	162	#6	6"	26' – 5"	6,428	108	#6	9"	10' – 9"	1,744	8' – 3"	1,338	162	#6	6"	16' – 3"	3,954	18	18"	39' – 9"	478	88	18"	39' – 9"	2,337	82	12"	5' – 0"	274	82	12"	4' – 10"	265	11' – 6"	630	26' – 5"	71	56	156	1.975	436.2	2.0	227	81.0	17,675
4	8' – 0"	5' – 0"	9"	8"	162	#6	6"	35' – 1"	8,537	108	#6	9"	10' – 9"	1,744	8' – 3"	1,338	162	#6	6"	24' – 3"	5,901	24	18"	39' – 9"	637	114	18"	39' – 9"	3,027	82	12"	5' – 0"	274	123	12"	4' – 10"	397	11' – 6"	945	35' – 1"	94	74	206	2.580	570.0	2.6	300	105.8	23,100
5	8' – 0"	5' – 0"	9"	8"	162	#6	6"	43' – 9"	10,645	108	#6	9"	10' – 9"	1,744	8' – 3"	1,338	162	#6	6"	32' – 3"	7,847	30	18"	39' – 9"	797	140	18"	39' – 9"	3,717	82	12"	5' – 0"	274	164	12"	4' – 10"	530	11' – 6"	1,260	43' – 9"	117	90	251	3.185	703.8	3.2	368	130.6	28,520
6	8' – 0"	5' – 0"	9"	8"	162	#6	6"	52' – 5"	12,754	108	#6	9"	10' – 9"	1,744	8' – 3"	1,338	162	#6	6"	40' – 3"	9,794	36	18"	39' – 9"	956	166	18"	39' – 9"	4,408	82	12"	5' – 0"	274	205	12"	4' – 10"	662	11' – 6"	1,575	52' – 5"	140	108	301	3.790	837.6	3.9	441	155.5	33,946
2	8' – 0"	6' – 0"	9"	8"	162	#6	6"	17' – 9"	4,319	108	#6	9"	11' – 9"	1,906	8' – 3"	1,338	162	#6	6"	8' – 3"	2,007	12	18"	39' – 9"	319	68	18"	39' – 9"	1,806	82	12"	6' – 0"	329	41	12"	4' – 10"	132	13' – 6"	370	17' – 9"	47	38	106	1.444	313.2	1.3	153	59.1	12,679
3	8' – 0"	6' – 0"	9"	8"	162	#6	6"	26' – 5"	6,428	108	#6	9"	11' – 9"	1,906	8' – 3"	1,338	162	#6	6"	16' – 3"	3,954	18	18"	39' – 9"	478	96	18"	39' – 9"	2,549	82	12"	6' – 0"	329	82	12"	4' – 10"	265	13' – 6"	739	26' – 5"	71	56	156	2.074	449.7	2.0	227	84.9	18,213
4	8' – 0"	6' – 0"	9"	8"	162	#6	6"	35' – 1"	8,537	108	#6	9"	11' – 9"	1,906	8' – 3"	1,338	162	#6	6"	24' – 3"	5,901	24	18"	39' – 9"	637	124	18"	39' – 9"	3,293	82	12"	6' – 0"	329	123	12"	4' – 10"	397	13' – 6"	1,109	35' – 1"	94	74	206	2.704	586.2	2.6	300	110.8	23,747
5	8' – 0"	6' – 0"	9"	8"	162	#6	6"	43' – 9"	10,645	108	#6	9"	11' – 9"	1,906	8' – 3"	1,338	162	#6	6"	32' – 3"	7,847	30	18"	39' – 9"	797	152	18"	39' – 9"	4,036	82	12"	6' – 0"	329	164	12"	4' – 10"	530	13' – 6"	1,479	43' – 9"	117	90	251	3.333	722.7	3.2	368	136.6	29,275
6	8' – 0"	6' – 0"	9"	8"	162	#6	6"	52' – 5"	12,754	108	#6	9"	11' – 9"	1,906	8' – 3"	1,338	162	#6	6"	40' – 3"	9,794	36	18"	39' – 9"	956	180	18"	39' – 9"	4,780	82	12"	6' – 0"	329	205	12"	4' – 10"	662	13' – 6"	1,849	52' – 5"	140	108	301	3.963	859.2	3.9	441	162.4	34,809
2	8' – 0"	7' – 0"	9"	8"	162	#6	6"	17' – 9"	4,319	108	#6	9"	12' – 9"	2,068	8' – 3"	1,338	162	#6	6"	8' – 3"	2,007	12	18"	39' – 9"	319	68	18"	39' – 9"	1,806	82	12"	7' – 0"	383	41	12"	4' – 10"	132	15' – 6"	425	17' – 9"	47	38	106	1.519	319.9	1.3	153	62.1	12,950
3	8' – 0"	7' – 0"	9"	8"	162	#6	6"	26' – 5"	6,428	108	#6	9"	12' – 9"	2,068	8' – 3"	1,338	162	#6	6"	16' – 3"	3,954	18	18"	39' – 9"	478	96	18"	39' – 9"	2,549	82	12"	7' – 0"	383	82	12"	4' – 10"	265	15' – 6"	849	26' – 5"	71	56	156	2.173	457.8	2.0	227	88.9	18,539
4	8' – 0"	7' – 0"	9"	8"	162	#6	6"	35' – 1"	8,537	108	#6	9"	12' – 9"	2,068	8' – 3"	1,338	162	#6	6"	24' – 3"	5,901	24	18"	39' – 9"	637	124	18"	39' – 9"	3,293	82	12"	7' – 0"	383	123	12"	4' – 10"	397	15' – 6"	1,274	35' – 1"	94	74	206	2.827	595.7	2.6	300	115.7	24,128
5	8' – 0"	7' – 0"	9"	8"	162	#6	6"	43' – 9"	10,645	108	#6	9"	12' – 9"	2,068	8' – 3"	1,338	162	#6	6"	32' – 3"	7,847	30	18"	39' – 9"	797	152	18"	39' – 9"	4,036	82	12"	7' – 0"	383	164	12"	4' – 10"	530	15' – 6"	1,698	43' – 9"	117	90	251	3.481	733.6	3.2	368	142.5	29,710
6	8' – 0"	7' – 0"	9"	8"	162	#6	6"	52' – 5"	12,754	108	#6	9"	12' – 9"	2,068	8' – 3"	1,338	162	#6	6"	40' – 3"	9,794	36	18"	39' – 9"	956	180	18"	39' – 9"	4,780	82	12"	7' – 0"	383	205	12"	4' – 10"	662	15' – 6"	2,123	52' – 5"	140	108	301	4.136	871.5	3.9	441	169.3	35,299
2	8' – 0"	8' – 0"	9"	8"	162	#6	6"	17' – 9"	4,319	108	#6	9"	13' – 9"	2,230	8' – 3"	1,338	162	#6	6"	8' – 3"	2,007	12	18"	39' – 9"	319	74	18"	39' – 9"	1,965	82	12"	8' – 0"	438	41	12"	4' – 10"	132	17' – 6"	479	17' – 9"	47	38	106	1.593	330.7	1.3	153	65.0	13,380
3	8' – 0"	8' – 0"	9"	8"	162	#6	6"	26' – 5"	6,428	108	#6	9"	13' – 9"	2,230	8' – 3"	1,338	162	#6	6"	16' – 3"	3,954	18	18"	39' – 9"	478	104	18"	39' – 9"	2,762	108	9"	8' – 0"	577	82	12"	4' – 10"	265	17' – 6"	959	26' – 5"	71	56	156	2.272	474.8	2.0	227	92.8	19,218
4	8' – 0"	8' – 0"	9"	8"	162	#6	6"	35' – 1"	8,537	108	#6	9"	13' – 9"	2,230	8' – 3"	1,338	162	#6	6"	24' – 3"	5,901	24	18"	39' – 9"	637	134	18"	39' – 9"	3,558	108	9"	8' – 0"	577	123	12"	4' – 10"	397	17' – 6"	1,438	35' – 1"	94	74	206	2.951	615.3	2.6	300	120.6	24,913
5	8' – 0"	8' – 0"	9"	8"	162	#6	6"	43' – 9"	10,645	108	#6	9"	13' – 9"	2,230	8' – 3"	1,338	162	#6	6"	32' – 3"	7,847	30	18"	39' – 9"	797	164	18"	39' – 9"	4,355	108	9"	8' – 0"	577	164	12"	4' – 10"	530	17' – 6"	1,917	43' – 9"	117	90	251	3.630	755.9	3.2	368	148.4	30,604
6	8' – 0"	8' – 0"	9"	8"	162	#6	6"	52' – 5"	12,754	108	#6	9"	13' – 9"	2,230	8' – 3"	1,338	162	#6	6"	40' – 3"	9,794	36	18"	39' – 9"	956	194	18"	39' – 9"	5,151	108	9"	8' – 0"	577	205	12"	4' – 10"	662	17' – 6"	2,396	52' – 5"	140	108	301	4.309	896.5	3.9	441	176.2	36,299

DISCLAIMER:
The use of this standard is governed by the "Texas Engineering Practice Act". No warranty of any kind is made by TxDOT for any purpose whatsoever. TxDOT assumes no responsibility for the conversion of this standard to other formats or for incorrect results or damages resulting from its use.

DATE:
FILE:

HL93 LOADING SHEET 2 OF 2

Texas Department of Transportation

Bridge Division Standard

MULTIPLE BOX CULVERTS CAST-IN-PLACE

8'-0" SPAN

2' TO 16' FILL

MC-8-16

FILE: mc816ste-20.dgn	DN: TBE	CK: BMP	DW: TxDOT	CK: TxDOT
©TxDOT February 2020	CONT	SECT	JOB	HIGHWAY
REVISIONS				
	DIST	COUNTY		SHEET NO.
				207

DISCLAIMER:
The use of this standard is governed by the "Texas Engineering Practice Act". No warranty of any kind is made by TxDOT for any purpose whatsoever. TxDOT assumes no responsibility for the conversion of this standard to other formats or for incorrect results or damages resulting from its use.

DATE:
FILE:

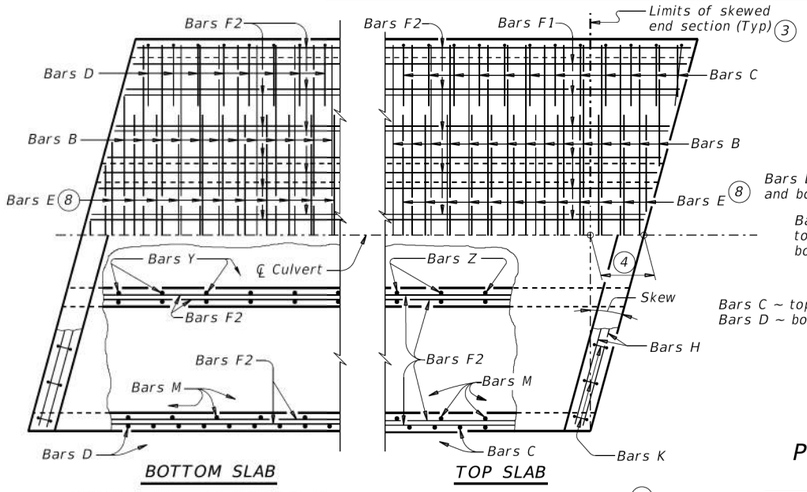

PLAN OF SKEWED ENDS ~ FROM 0° TO 15° 7

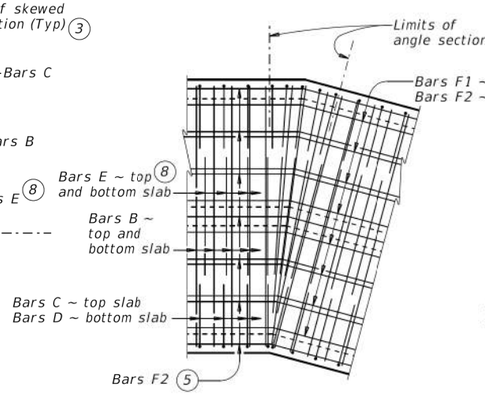

PLAN OF ANGLE SECTION ~ FROM 0° TO 15°

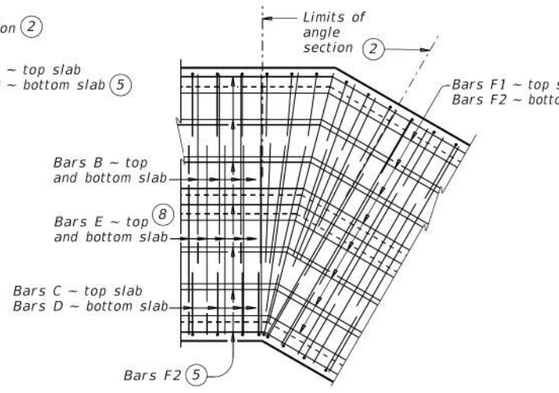

PLAN OF ANGLE SECTION ~ OVER 15° TO 30°

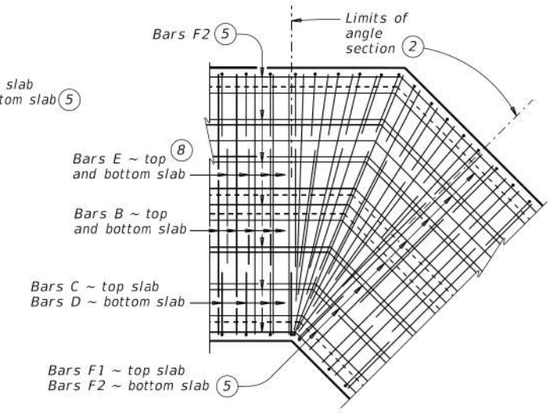

PLAN OF ANGLE SECTION ~ OVER 30° TO 45°

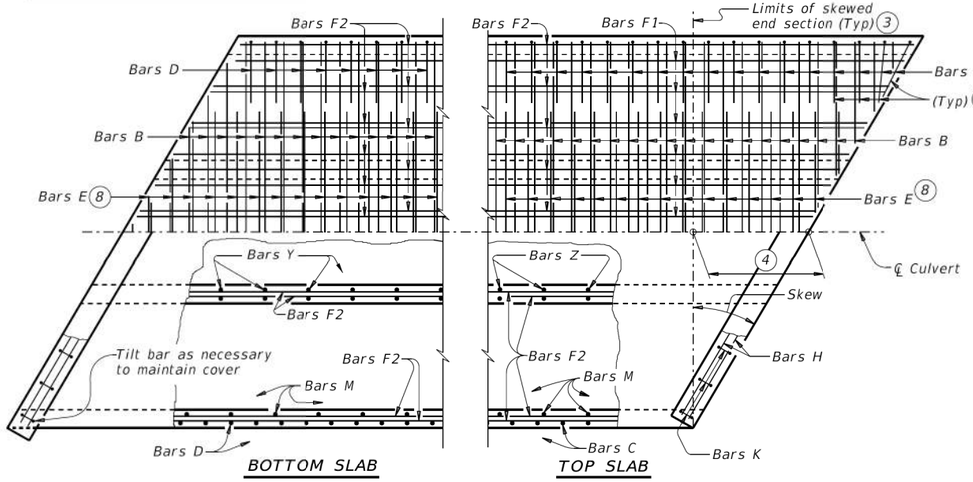

PLAN OF SKEWED ENDS ~ OVER 15° TO 30°

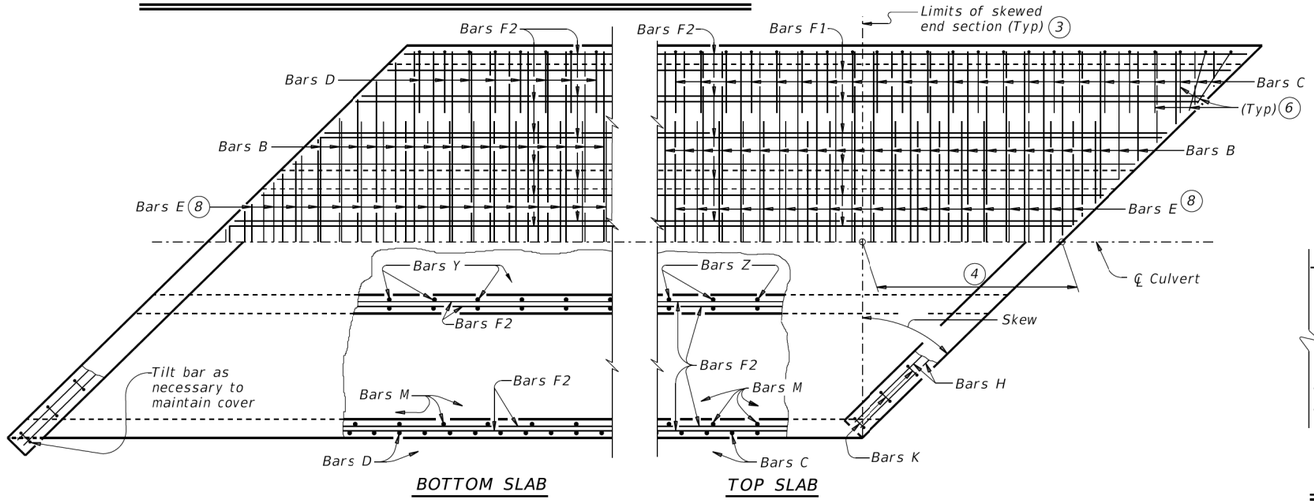

PLAN OF SKEWED ENDS ~ OVER 30° TO 45°

1 For skewed box culverts with less than 2'-0" of fill, break back the top slab to provide a 1'-10" minimum lap of the existing longitudinal bars with the longitudinal bars in the extension.

For non-skewed box culverts with less than 2'-0" of fill and for skewed or non-skewed culverts with a fill depth of 2'-0" or greater, break back the top slab to provide a 1'-10" minimum lap of the existing longitudinal bars with the longitudinal bars in the extension. Alternatively, if the box is non-skewed, embed #6 anchor bars with a Type III, Class C, D, E, or F anchor adhesive into the existing walls, top and bottom slab at 1'-6" center-to-center spacing. Minimum embedment depth is 8". Anchor adhesive chosen must be able to achieve a basic bond strength in tension, Nba, of 26.4 kips. Submit signed and sealed calculations or the manufacturer's published literature showing the proposed anchor adhesive's ability to develop this load to the Engineer for approval prior to use. Anchor installation, including hole size, drilling, and clean out, must be in accordance with Item 450, "Railing." Test adhesive anchors in accordance with Item 450.3.3, "Tests." Test 3 anchors per 100 anchors installed.

Break back wings and apron as necessary to install the extension. Clean and extend the exposed wingwall and apron reinforcing into the extension. When lengthening existing box culverts with dimensions different than current standard dimensions, form horizontal and vertical transitions as directed by the Engineer. Match bottom slabs to maintain an uninterrupted flow line. Field bend existing and new reinforcing into transitions and maintain specified cover requirements. For top slabs of culverts with overlay, with 1-to-2 course surface treatment, or with the top slab as the final riding surface, adjust the "H" dimension to provide a smooth riding surface.

2 When the spacing between Bars B or Bars E becomes less than half of the normal spacing, cut bars to avoid conflict.

3 The length of Bars B and Bars E will vary in the skewed end sections.

4 [One half of overall width] x [tangent of the skew angle]

5 Place Bars F1 and F2 continuously through the angle section. Bend Bars F1 and F2 to remain parallel to the walls of the box culvert.

6 When necessary to avoid conflict in acute corners, shorten the slab extension leg of Bars C and Bars D to a minimum of 1'-6" for skews of 30° thru 45°.

7 At the Contractor's option, for skews of 15° or less, place Bars B, C, D, and E parallel to the skewed end while maintaining spacing along centerline of box. Increase lengths of Bars B and Bars E shown on the Multiple Box Culverts Cast-In-Place (MC) standard sheets to accommodate the skew.

8 Extend Bars E as shown on the MC standard sheet for direct traffic culverts.

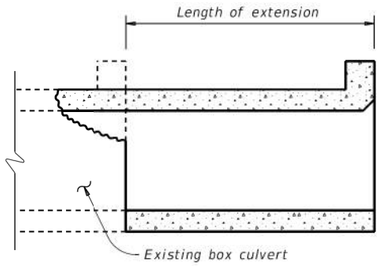

LENGTHENING DETAIL 1

CONSTRUCTION NOTES:

Do not use permanent forms.
When required, lap Bars H 1'-8" for uncoated or galvanized bars.
Provide a minimum of 1 ½" clear cover.

MATERIAL NOTES:

Provide Grade 60 reinforcing steel.
Provide galvanized reinforcing steel, if required elsewhere in the plans.
Provide Class C concrete (f'c = 3,600 psi) with these exceptions: provide Class S concrete (f'c = 4,000 psi) for top slabs of culverts with overlay, with 1-to-2 course surface treatment, or with the top slab as the final riding surface.

GENERAL NOTES:

Designed according to AASHTO LRFD Bridge Design Specifications.
Refer to Multiple Box Culverts Cast-in-Place (MC) standard sheets for details of straight sections of culvert.
For skewed sections and angle sections, refer to Multiple Box Culverts Cast-in-Place (MC) standard sheets for slab and wall dimensions, bar sizes, maximum bar spacing, and any other details not shown.
For skewed ends with curbs, adjust length of Bars H, number of Bars K, curb concrete volume, and reinforcing steel weight by dividing the values shown on the Multiple Box Culverts Cast-In-Place (MC) standard sheets by the cosine of the skew angle.

Cover dimensions are clear dimensions, unless noted otherwise.

HL93 LOADING

Texas Department of Transportation | Bridge Division Standard

MULTIPLE BOX CULVERTS CAST-IN-PLACE MISCELLANEOUS DETAILS

MC-MD

FILE: mc-mdste-20.dgn	DN: TxDOT	CK: TxDOT	DW: TxDOT	CK: TxDOT
©TxDOT February 2020	CONT	SECT	JOB	HIGHWAY
REVISIONS				
	DIST	COUNTY		SHEET NO.
				208

DISCLAIMER:
The use of this standard is governed by the "Texas Engineering Practice Act". No warranty of any kind is made by TxDOT for any purpose whatsoever. TxDOT assumes no responsibility for the conversion of this standard to other formats or for incorrect results or damages resulting from its use.

DATE:
FILE:

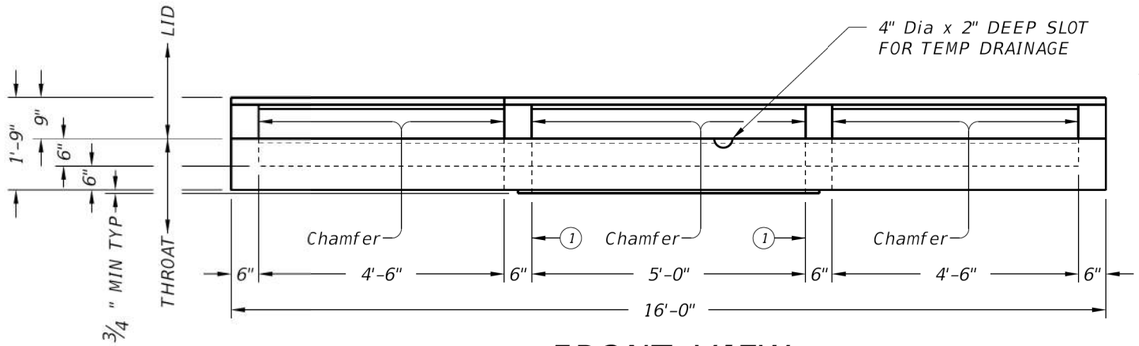

FRONT VIEW

(SHOWING LEFT AND RIGHT EXTENSIONS)

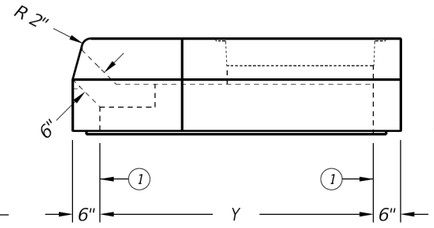

RIGHT VIEW

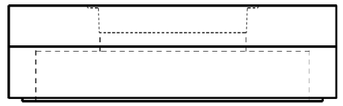

REAR VIEW

(EXTENSIONS NOT SHOWN)

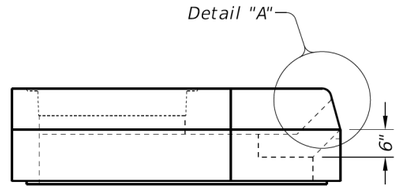

LEFT VIEW

(1) Matches inside face of wall of precast base or riser below inlet.

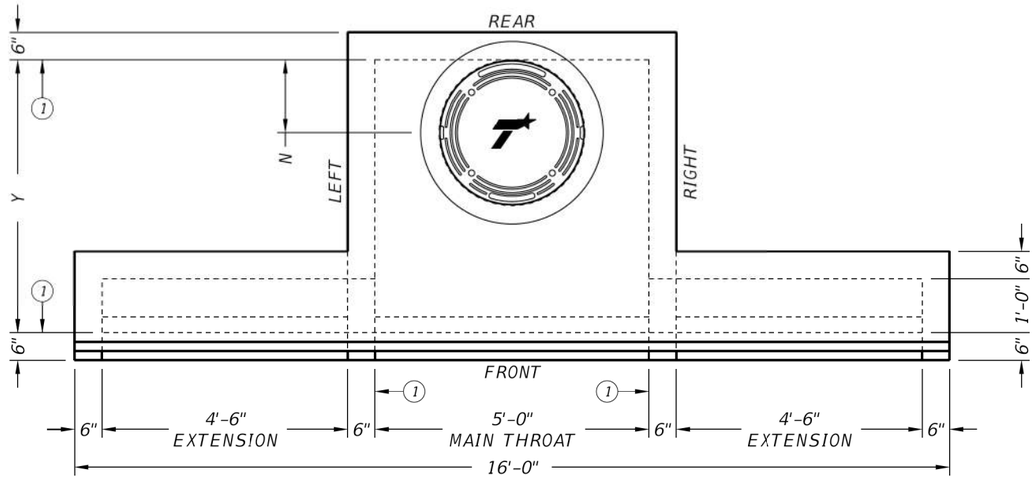

PLAN VIEW

(SHOWING LEFT AND RIGHT EXTENSIONS)

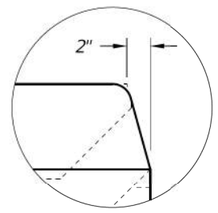

DETAIL "A"

HS20 LOADING

Texas Department of Transportation

Bridge Division Standard

PRECAST CURB INLET OUTSIDE ROADWAY

PCO

FILE: prestd03-20.dgn	DN: TxDOT	CK: TxDOT	DW: TxDOT	CK: TxDOT
©TxDOT February 2020	CONT	SECT	JOB	HIGHWAY
REVISIONS				
	DIST	COUNTY		SHEET NO.
				209

DISCLAIMER:
The use of this standard is governed by the "Texas Engineering Practice Act". No warranty of any kind is made by TxDOT for any purpose whatsoever. TxDOT assumes no responsibility for the conversion of this standard to other formats or for incorrect results or damages resulting from its use.

DATE:
FILE:

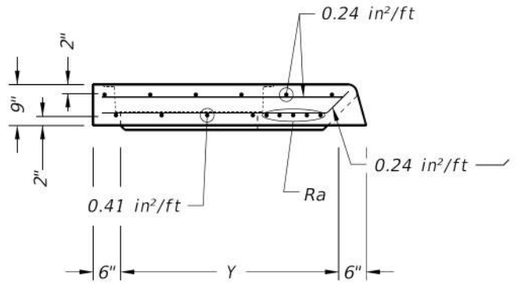

LID SECTION A-A

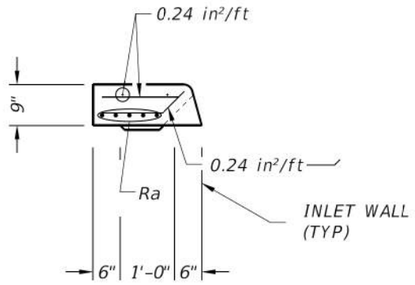

LID SECTION B-B

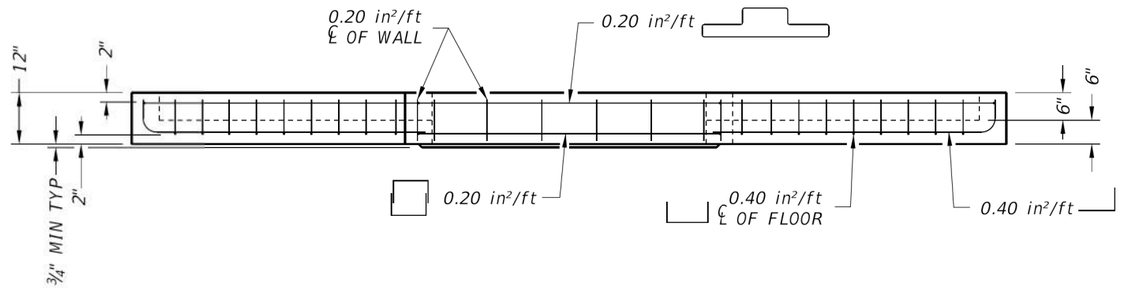

THROAT ELEVATION VIEW

(SHOWING LEFT AND RIGHT EXTENSIONS)

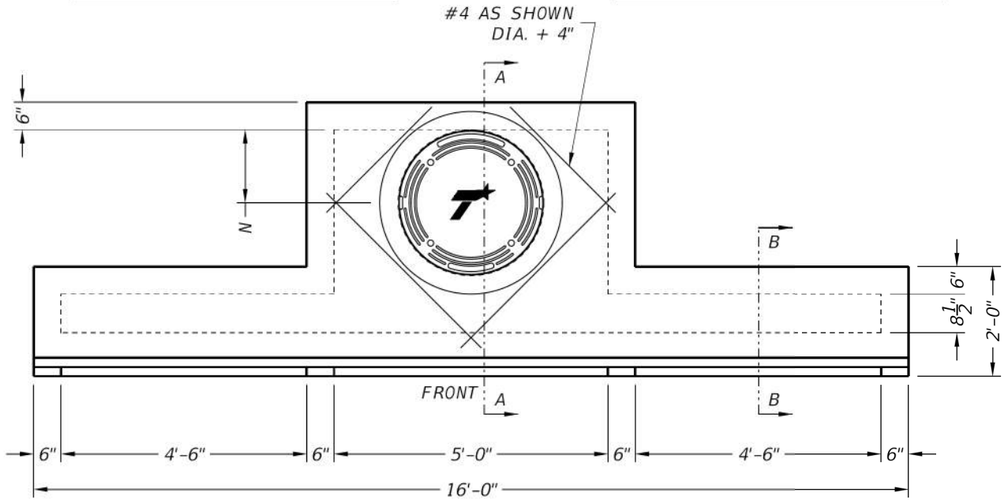

LID PLAN VIEW

(SHOWING LEFT AND RIGHT EXTENSIONS)

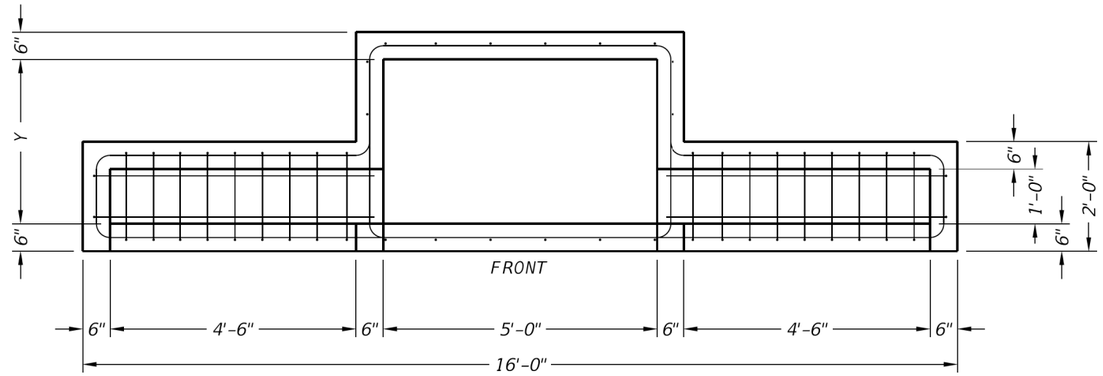

THROAT PLAN VIEW

(SHOWING LEFT AND RIGHT EXTENSIONS)

SIZE(Y)	N	MH DIA*	Ra
3'	9"	18"	(4) #5 Additional
4'	16"	32"	(4) #5 Additional
5'	16"	32"	(4) #5 Additional
6'	16"	32"	(4) #5 Additional

* Nominal ring and cover size.

FABRICATION NOTES:

1. Provide Class "H" concrete in accordance with Item 421 and having a minimum compressive strength of 5,000 psi.
2. Provide Grade 60 reinforcing steel or equivalent area of WWR.
3. Extensions may be right, left, both or none. Provide extensions as specified elsewhere in the plans.
4. Design tongue and groove joints for full closure on both shoulders. Minimum spigot depth is ¾". Lid may employ a butt joint with dowels at the Contractor's option.
5. Provide lifting devices in conformance with Manufacturer's recommendations.
6. Provide cast iron solid cover, unless noted otherwise elsewhere in the plans.
7. Chamfer vertical edges of inlet lid ¾" as shown in Front View, sheet 1.

INSTALLATION NOTES:

1. Inlet throat and lid are not intended for direct traffic. Do not place in roadway.
2. Seal tongue and groove joints and butt joints with preformed or bulk mastic in conformance with Manufacturer's recommendations. Tongue and groove joints may be grouted no more than 1" between each section, or ½ the joint depth, whichever is greater.
3. Do not grout rubber gasket joints without Manufacturer's recommendation.

GENERAL NOTES:

1. Designed according to ASTM C913.
2. Open area of main throat = 360 sq in. Open area of one extension throat = 324 sq in.
3. Payment for inlet is per Item 465, "Junction Boxes, Manholes, and Inlets" by type, size, and extension placement. Extensions are subsidiary to inlet.

Cover dimensions are clear dimensions, unless noted otherwise.

HS20 LOADING SHEET 2 OF 2

Texas Department of Transportation | Bridge Division Standard

PRECAST CURB INLET OUTSIDE ROADWAY

PCO

FILE: prestd03-20.dgn	DN: TxDOT	CK: TxDOT	DW: TxDOT	CK: TxDOT
©TxDOT February 2020	CONT	SECT	JOB	HIGHWAY
REVISIONS				
	DIST	COUNTY		SHEET NO.
				210

DISCLAIMER:
The use of this standard is governed by the "Texas Engineering Practice Act". No warranty of any kind is made by TxDOT for any purpose whatsoever. TxDOT assumes no responsibility for the conversion of this standard to other formats or for incorrect results or damages resulting from its use.

DATE:
FILE:

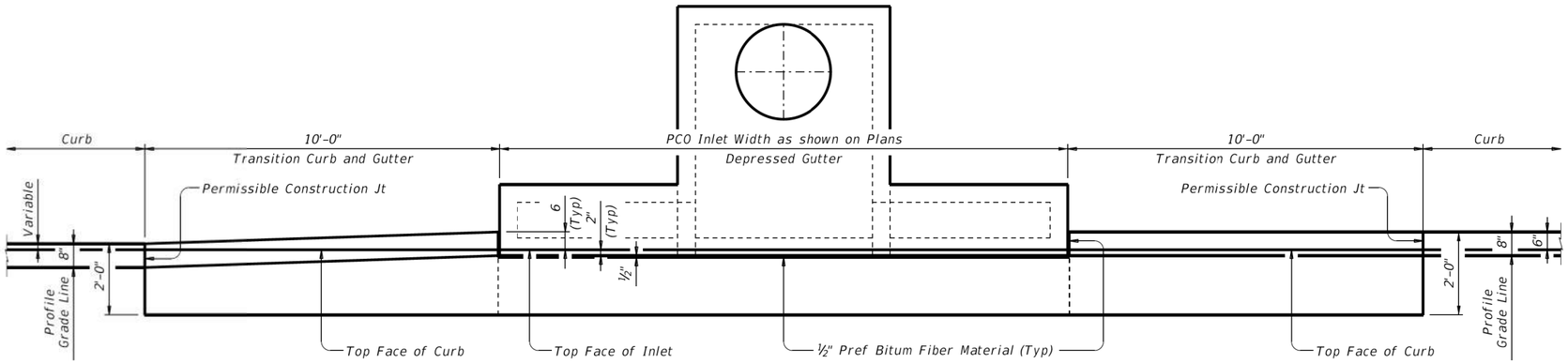

SHOWING TYPE I, IIa & III Curb and Gutter

SHOWING TYPE II & IV Curb and Gutter

PLAN

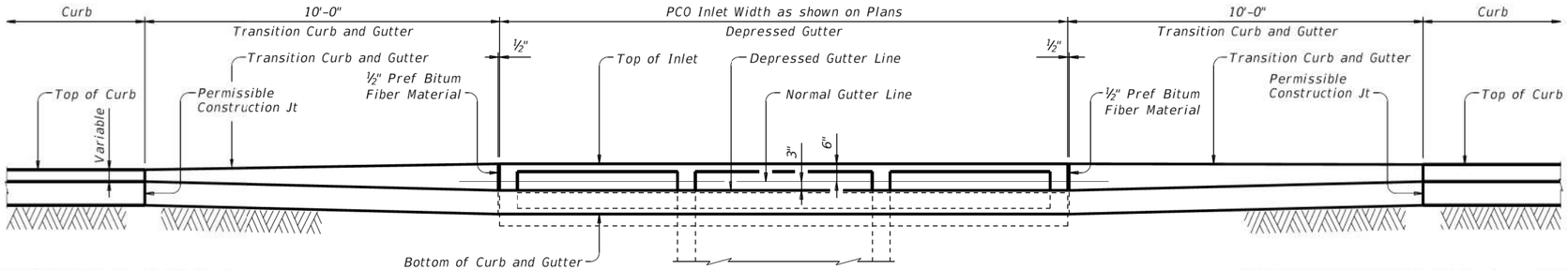

SHOWING TYPE I, IIa & III Curb and Gutter

SHOWING TYPE II & IV Curb and Gutter

ELEVATION

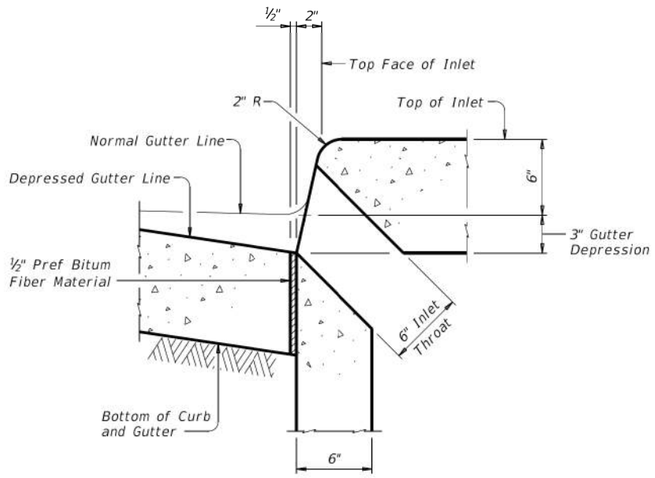

SECTION AT GUTTER AND INLET

Reinforcing steel not shown for clarity.

CONSTRUCTION NOTES:
Align top face of curb with PCO Inlet as shown.

MATERIAL NOTES:
Provide ½" Preformed Bituminous Fiber Material.

GENERAL NOTES:
See Precast Curb Inlet Outside Roadway (PCO) standard for details and notes not shown.
See Concrete Curb and Curb and Gutter (CCCG-12) standard for details and notes not shown.
Curb and Gutter Transitions is paid for and in accordance with Item 529, "Concrete Curb, Gutter, and Combined Curb and Gutter."
Preformed Bituminous Fiber Material is subsidiary to PCO Inlet.

Texas Department of Transportation

Bridge Division Standard

CURB AND GUTTER TRANSITION DETAILS FOR PCO INLET

CGT-PCO

FILE: prestd13-20.dgn	DN: TxDOT	CK: AES	DW: JTR	CK: AES
©TxDOT February 2020	CONT	SECT	JOB	HIGHWAY
REVISIONS				
	DIST	COUNTY		SHEET NO.
				211

DISCLAIMER:
The use of this standard is governed by the "Texas Engineering Practice Act". No warranty of any kind is made by TxDOT for any purpose whatsoever. TxDOT assumes no responsibility for the conversion of this standard to other formats or for incorrect results or damages resulting from its use.

TABLE OF VARIABLE DIMENSIONS AND QUANTITIES FOR ONE HEADWALL (5)

Slope	Dia of Pipe (D)	Values for One Pipe						Values to be Added for Each Addt'l Pipe		
		W	X	Y	L	Reinf (Lbs)	Conc (CY) (1)	X and W	Reinf (Lbs)	Conc (CY) (1)
2:1	12"	4' - 7 ½"	2' - 6"	2' - 10"	3' - 3 ¼"	88	0.6	1' - 9"	20	0.2
	15"	5' - 5 ¾"	2' - 9 ½"	3' - 4"	3' - 10 ¼"	103	0.7	2' - 2"	24	0.3
	18"	6' - 4 ¼"	3' - 1"	3' - 10"	4' - 5"	124	0.9	2' - 8"	32	0.3
	21"	7' - 2 ¾"	3' - 4 ½"	4' - 4"	5' - 0"	143	1.1	3' - 1"	43	0.4
	24"	8' - 2 ½"	3' - 9 ½"	4' - 10"	5' - 7"	164	1.3	3' - 7"	50	0.5
	27"	9' - 1"	4' - 1"	5' - 4"	6' - 2"	179	1.5	3' - 11"	56	0.6
	30"	9' - 11 ½"	4' - 4 ½"	5' - 10"	6' - 8 ¾"	203	1.7	4' - 4"	65	0.8
	33"	10' - 10"	4' - 8"	6' - 4"	7' - 3 ¾"	224	2.0	4' - 8"	71	0.9
	36"	11' - 8 ¼"	4' - 11 ½"	6' - 10"	7' - 10 ¾"	249	2.2	5' - 1"	81	1.0
	42"	13' - 5 ¼"	5' - 6 ½"	7' - 10"	9' - 0 ½"	298	2.8	5' - 10"	97	1.3
	48"	15' - 9"	6' - 1 ½"	9' - 4"	10' - 9 ¼"	360	3.8	6' - 7"	117	1.7
	54"	17' - 5 ¾"	6' - 8 ½"	10' - 4"	11' - 11 ¼"	427	4.5	7' - 6"	151	2.1
	60"	19' - 2 ¾"	7' - 3 ½"	11' - 4"	13' - 1"	481	5.3	8' - 3"	174	2.5
	66"	20' - 11 ½"	7' - 10 ½"	12' - 4"	14' - 3"	544	6.2	8' - 9"	194	2.9
	72"	22' - 8 ½"	8' - 5 ½"	13' - 4"	15' - 4 ¾"	601	7.1	9' - 4"	213	3.3
3:1	12"	6' - 3"	2' - 6"	4' - 3"	4' - 11"	118	0.8	1' - 9"	22	0.2
	15"	7' - 5"	2' - 9 ½"	5' - 0"	5' - 9 ¼"	137	1.1	2' - 2"	28	0.3
	18"	8' - 6 ¾"	3' - 1"	5' - 9"	6' - 7 ¾"	170	1.3	2' - 8"	37	0.5
	21"	9' - 8 ¾"	3' - 4 ½"	6' - 6"	7' - 6"	195	1.6	3' - 1"	48	0.6
	24"	11' - 0"	3' - 9 ½"	7' - 3"	8' - 4 ½"	227	2.0	3' - 7"	58	0.7
	27"	12' - 2"	4' - 1"	8' - 0"	9' - 2 ¾"	251	2.3	3' - 11"	67	0.8
	30"	13' - 4"	4' - 4 ½"	8' - 9"	10' - 1 ¼"	293	2.7	4' - 4"	77	1.0
	33"	14' - 5 ¾"	4' - 8"	9' - 6"	10' - 11 ¾"	318	3.1	4' - 8"	84	1.2
	36"	15' - 7 ¾"	4' - 11 ½"	10' - 3"	11' - 10"	351	3.5	5' - 1"	96	1.4
	42"	17' - 11 ½"	5' - 6 ½"	11' - 9"	13' - 6 ¾"	432	4.5	5' - 10"	119	1.7
	48"	21' - 1 ¾"	6' - 1 ½"	14' - 0"	16' - 2"	537	6.1	6' - 7"	146	2.3
	54"	23' - 5 ½"	6' - 8 ½"	15' - 6"	17' - 10 ¾"	630	7.3	7' - 6"	186	2.9
	60"	25' - 9 ¼"	7' - 3 ½"	17' - 0"	19' - 7 ½"	719	8.7	8' - 3"	219	3.4
	66"	28' - 1"	7' - 10 ½"	18' - 6"	21' - 4 ¼"	811	10.1	8' - 9"	242	3.9
	72"	30' - 4 ¾"	8' - 5 ½"	20' - 0"	23' - 1 ¼"	924	11.7	9' - 4"	272	4.4
4:1	12"	7' - 10 ¾"	2' - 6"	5' - 8"	6' - 6 ½"	148	1.1	1' - 9"	24	0.3
	15"	9' - 4"	2' - 9 ½"	6' - 8"	7' - 8 ½"	181	1.5	2' - 2"	32	0.4
	18"	10' - 9 ½"	3' - 1"	7' - 8"	8' - 10 ¼"	221	1.9	2' - 8"	42	0.5
	21"	12' - 2 ¾"	3' - 4 ½"	8' - 8"	10' - 0"	260	2.3	3' - 1"	57	0.7
	24"	13' - 9 ½"	3' - 9 ½"	9' - 8"	11' - 2"	301	2.8	3' - 7"	67	0.9
	27"	15' - 3"	4' - 1"	10' - 8"	12' - 3 ¾"	334	3.3	3' - 11"	77	1.0
	30"	16' - 8 ¼"	4' - 4 ½"	11' - 8"	13' - 5 ¾"	385	3.8	4' - 4"	89	1.3
	33"	18' - 1 ¾"	4' - 8"	12' - 8"	14' - 7 ½"	425	4.5	4' - 8"	101	1.4
	36"	19' - 7"	4' - 11 ½"	13' - 8"	15' - 9 ¼"	472	5.1	5' - 1"	115	1.7
	42"	22' - 5 ¾"	5' - 6 ½"	15' - 8"	18' - 1"	583	6.5	5' - 10"	141	2.1
	48"	26' - 6 ¼"	6' - 1 ½"	18' - 8"	21' - 6 ¾"	730	8.9	6' - 7"	175	2.8
	54"	29' - 5"	6' - 8 ½"	20' - 8"	23' - 10 ¼"	875	10.7	7' - 6"	226	3.6
	60"	32' - 3 ¾"	7' - 3 ½"	22' - 8"	26' - 2"	996	12.7	8' - 3"	264	4.3
	66"	35' - 2 ½"	7' - 10 ½"	24' - 8"	28' - 5 ¾"	1,140	14.9	8' - 9"	300	4.9
	72"	38' - 1 ¼"	8' - 5 ½"	26' - 8"	30' - 9 ½"	1,297	17.3	9' - 4"	334	5.6
6:1	12"	11' - 2"	2' - 6"	8' - 6"	9' - 9 ¾"	224	1.9	1' - 9"	28	0.4
	15"	13' - 2 ¼"	2' - 9 ½"	10' - 0"	11' - 6 ½"	268	2.5	2' - 2"	37	0.5
	18"	15' - 2 ½"	3' - 1"	11' - 6"	13' - 3 ¼"	330	3.2	2' - 8"	50	0.7
	21"	17' - 2 ¾"	3' - 4 ½"	13' - 0"	15' - 0 ¼"	387	3.9	3' - 1"	69	0.9
	24"	19' - 4 ½"	3' - 9 ½"	14' - 6"	16' - 9"	453	4.8	3' - 7"	80	1.2
	27"	21' - 4 ¾"	4' - 1"	16' - 0"	18' - 5 ¾"	512	5.7	3' - 11"	96	1.4
	30"	23' - 5 ¼"	4' - 4 ½"	17' - 6"	20' - 2 ½"	593	6.7	4' - 4"	110	1.7
	33"	25' - 5 ½"	4' - 8"	19' - 0"	21' - 11 ¼"	675	7.8	4' - 8"	127	2.0
	36"	27' - 5 ¾"	4' - 11 ½"	20' - 6"	23' - 8"	735	9.0	5' - 1"	144	2.3
	42"	31' - 6 ¼"	5' - 6 ½"	23' - 6"	27' - 1 ½"	922	11.5	5' - 10"	179	3.0
	48"	37' - 3 ½"	6' - 1 ½"	28' - 0"	32' - 4"	1,191	15.9	6' - 7"	231	4.0
	54"	41' - 4 ¼"	6' - 8 ½"	31' - 0"	35' - 9 ½"	1,424	19.2	7' - 6"	300	5.0
	60"	45' - 4 ¾"	7' - 3 ½"	34' - 0"	39' - 3"	1,631	22.9	8' - 3"	353	6.0

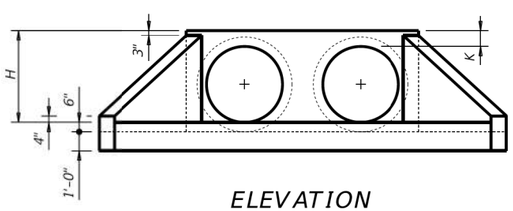

ELEVATION

(Showing dimensions.)

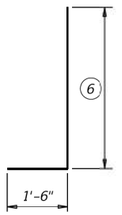

BARS V

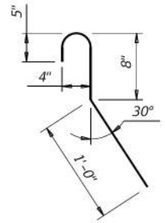

BARS CL

(Length = 2'-5")

TABLE OF (5) REINFORCING STEEL

Bar	Size	Spa	No.
A	#4	1' - 0"	~
B	#3	1' - 6"	~
C	#4	1' - 0"	~
D	#3	1' - 0"	~
E	#5	~	4
F	#5	~	~
G	#3	~	2
S	#4	~	6
V	#4	1' - 0"	~
W	#5	~	4

TABLE OF CONSTANT DIMENSIONS

Dia of Pipe (D)	G	K (4)	H
12"	0' - 9"	1' - 0"	2' - 0"
15"	0' - 11"	1' - 0"	2' - 3"
18"	1' - 2"	1' - 0"	2' - 6"
21"	1' - 4"	1' - 0"	2' - 9"
24"	1' - 7"	1' - 0"	3' - 0"
27"	1' - 8"	1' - 0"	3' - 3"
30"	1' - 10"	1' - 0"	3' - 6"
33"	1' - 11"	1' - 0"	3' - 9"
36"	2' - 1"	1' - 0"	4' - 0"
42"	2' - 4"	1' - 0"	4' - 6"
48"	2' - 7"	1' - 3"	5' - 3"
54"	3' - 0"	1' - 3"	5' - 9"
60"	3' - 3"	1' - 3"	6' - 3"
66"	3' - 3"	1' - 3"	6' - 9"
72"	3' - 4"	1' - 3"	7' - 3"

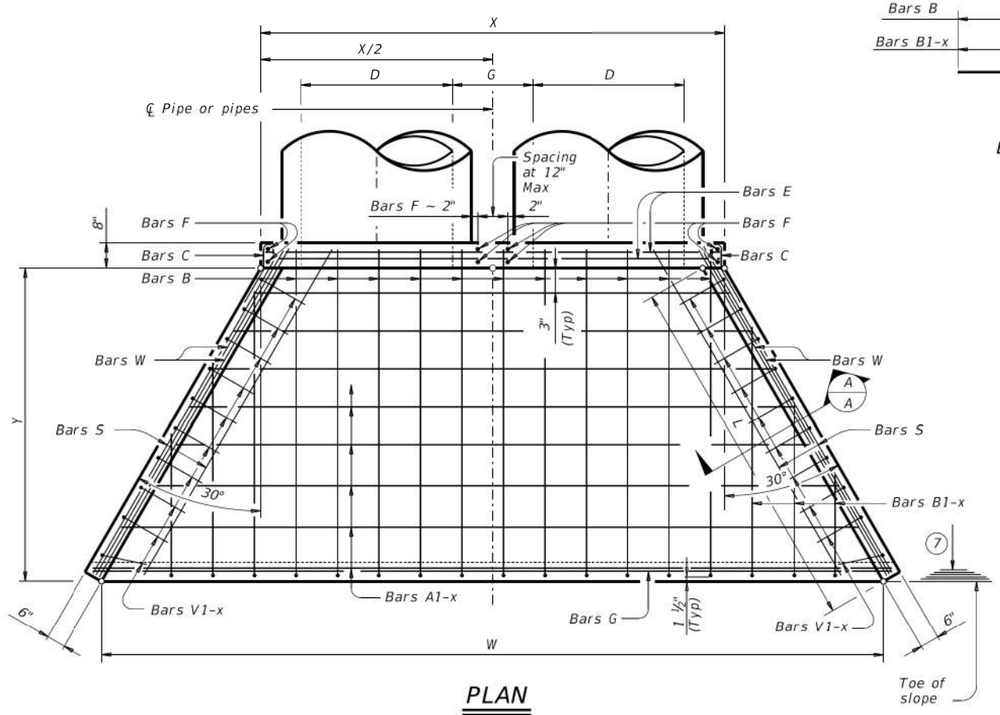

PLAN

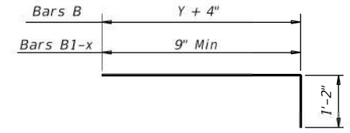

BARS B and B1-x

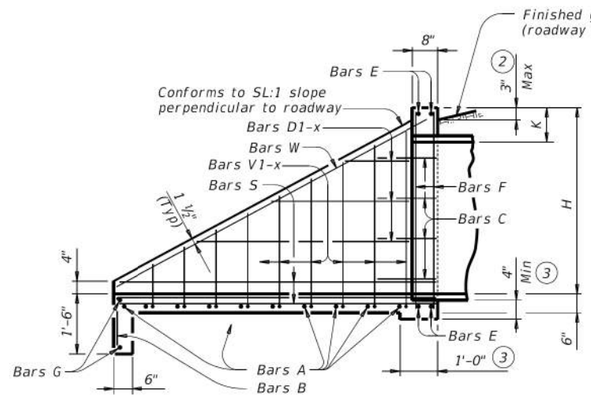

TYPICAL WING ELEVATION

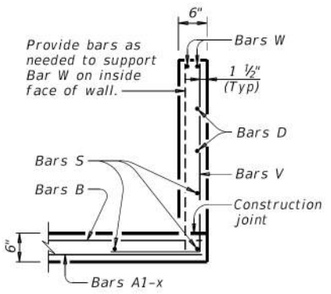

SECTION A-A

(1) Quantities shown are for concrete pipe and will increase slightly for metal pipe installations.

(2) For vehicle safety, construct curbs no more than 3" above finished grade. Reduce curb heights, if necessary, to meet these requirements. No changes will be made in quantities and no additional compensation will be allowed for this work.

(3) Provide a 1'-0" footing as shown where required to maintain 4" minimum cover for pipes.

(4) Dimensions shown are usual and maximum.

(5) Quantities shown are for one structure end only (one headwall).

(6) Min Length = $6" + 3" \times \left(\frac{12 \times H - 7}{12 \times L}\right)$

Max Length = $12 \times H - 3" \times \left(\frac{12 \times H - 7}{12 \times L}\right) - 1"$

(7) Lengths of wings based on SL:1 slope along this line.

MATERIAL NOTES:
Provide Grade 60 reinforcing steel.
Provide Class C concrete ($f'c$ = 3,600 psi).

GENERAL NOTES:
Designed according to AASHTO LRFD Bridge Design Specifications.
Do not mount bridge rails of any type directly to these culvert headwalls.
This standard may not be used for wall heights, H, exceeding the values shown.

Cover dimensions are clear dimensions, unless noted otherwise. Reinforcing dimensions are out-to-out of bars.

Texas Department of Transportation

Bridge Division Standard

CONCRETE HEADWALLS WITH FLARED WINGS FOR 0° SKEW PIPE CULVERTS

CH-FW-0

FILE: chfw00se-20.dgn	DN: TxDOT	CK: TxDOT	DW: TxDOT	CK: TxDOT
©TxDOT February 2020	CONT	SECT	JOB	HIGHWAY
REVISIONS				
	DIST	COUNTY		SHEET NO.
				212

DATE:
FILE:

DISCLAIMER:
The use of this standard is governed by the "Texas Engineering Practice Act". No warranty of any kind is made by TxDOT for any purpose whatsoever. TxDOT assumes no responsibility for the conversion of this standard to other formats or for incorrect results or damages resulting from its use.

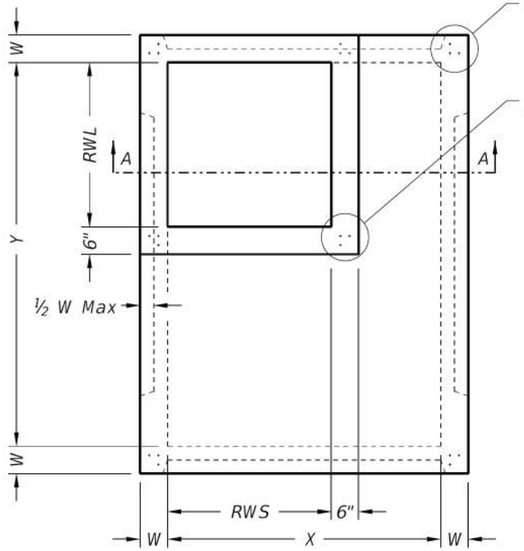

PLAN VIEW "A"

SQUARE REDUCED RISER OPTION

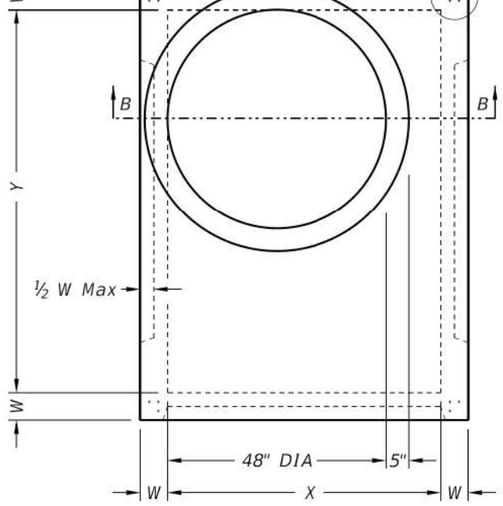

PLAN VIEW "B"

ROUND REDUCED RISER OPTION

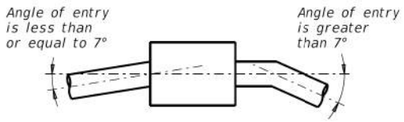

PIPE CONNECTION DETAIL

Connect pipes within 7° of normal to PB wall.
If necessary, use pipe elbow or curved
approach alignment to stay within this limit.

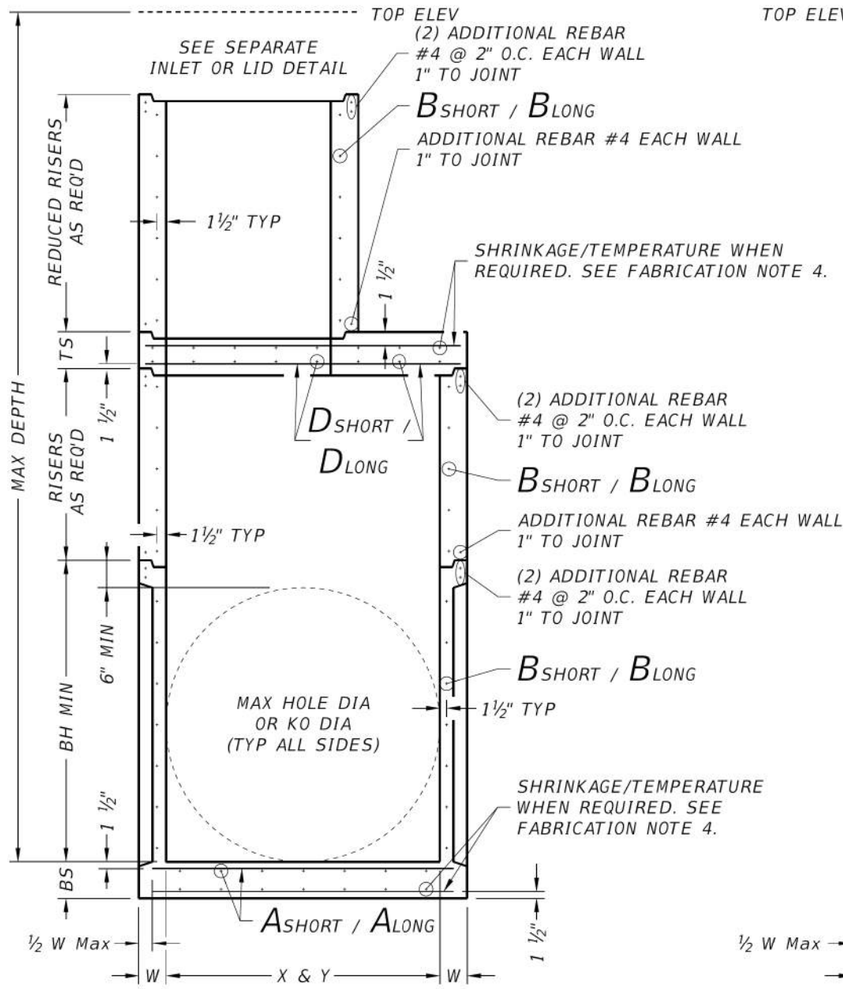

SECTION A-A

SQUARE REDUCED RISER OPTION

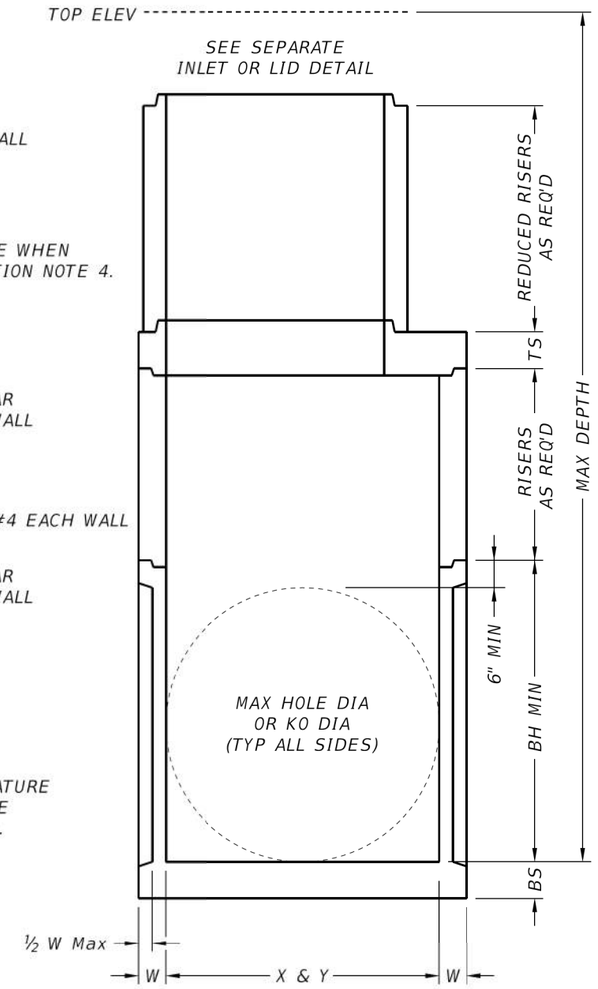

SECTION B-B

ROUND REDUCED RISER OPTION

FABRICATION NOTES:

1. Provide Class "H" concrete in accordance with Item 421 and having a minimum compressive strength of 5,000 psi.
2. Provide Grade 60 reinforcing steel or equivalent area of WWR.
3. Provide typical clear cover of 1 ½" to reinforcing steel at interior or exterior walls.
4. Walls or slabs with a thickness of 8" or greater require shrinkage and temperature reinforcing steel. Provide steel area = 0.11 in²/ft each way.
5. No substitution is allowed for vertical and horizontal #4 bars in corners.
6. Manufacture base and risers to nearest 3" increment.
7. Design tongue and groove joints for full closure on both shoulders. Minimum spigot depth is ¾".
8. Provide lifting devices in conformance with Manufacturer's recommendations.
9. See sheet PDD for sizes, dimensions, and reinforcing steel not shown.

INSTALLATION NOTES:

1. If required elsewhere. Inverts (benching) to be provided by Contractor. Concrete or mortar used for invert is subsidiary to specified inlet or manhole.
2. Seal tongue and groove joints with preformed or bulk mastic in conformance with Manufacturer's recommendations. Tongue and groove joints may be grouted no more than 1" between each section, or ½ the joint depth, whichever is greater.
3. Do not grout rubber gasket joints without Manufacturer's recommendation.
4. For rigid pipe, cut hole in thin wall panel (KO) 4" Max, 2" Min larger than pipe OD.
5. For flexible pipe, consult boot/seal Manufacturer's specification for placement tolerance and hole size. Center pipe in hole and install boot/seal per Manufacturer's specification.

GENERAL NOTES:

1. Precast Base consists of base slab, base unit, risers (as required), reducing slab (as required), and reduced risers (as required). See sheet PDD for sizes.
2. Designed according to ASTM C913.
3. Payment for precast base is subsidiary to the specified inlet, per Item 465, "Junction Boxes, Manholes, and Inlets."

Cover dimensions are clear dimensions, unless noted otherwise.

HL93 LOADING

Texas Department of Transportation

Bridge Division Standard

PRECAST BASE

PB

FILE: prestd01-20.dgn	DN: TxDOT	CK: TxDOT	DW: TxDOT	CK: TxDOT
©TxDOT February 2020	CONT	SECT	JOB	HIGHWAY
REVISIONS	DIST	COUNTY		SHEET NO.

DATE:
FILE:

DISCLAIMER:
The use of this standard is governed by the "Texas Engineering Practice Act". No warranty of any kind is made by TxDOT for any purpose whatsoever. TxDOT assumes no responsibility for the conversion of this standard to other formats or for incorrect results or damages resulting from its use.

DATE:
FILE:

	Size	MAX DEPTH = 15 ft. to top of BASE SLAB										MAX DEPTH = 25 ft. to top of BASE SLAB										Min Height (See Gen Note 3)	Max HOLE DIA (See Fab Note 2)	Max KO DIA (See Fab Note 2)
		Base Slab			Base Unit or Riser Walls			Below Grade Slab (w/PJB) Reducing Slab (w/PB)				Base Slab			Base Unit or Riser Walls			Below Grade Slab (w/PJB) Reducing Slab (w/PB)						
		Short Span Reinf Steel Area	Long Span Reinf Steel Area	Thickness	Short Span Reinf Steel Area	Long Span Reinf Steel Area	Thickness	Reduced Riser Size	Short Span Reinf Steel Area	Long Span Reinf Steel Area	Thickness	Short Span Reinf Steel Area	Long Span Reinf Steel Area	Thickness	Short Span Reinf Steel Area	Long Span Reinf Steel Area	Thickness	Reduced Riser Size	Short Span Reinf Steel Area	Long Span Reinf Steel Area	Thickness			
	X x Y	Ashort	Along	BS	Bshort	Blong	W	RWSxRWL or ID	Dshort	Dlong	TS	Ashort	Along	BS	Bshort	Blong	W	RWSxRWL or ID	Dshort	Dlong	TS	BH MIN	HOLE DIA	KO DIA
	ft.	in^2/ft	in^2/ft	in.	in^2/ft	in^2/ft	in.	ft. **	in^2/ft	in^2/ft	in.	in^2/ft	in^2/ft	in.	in^2/ft	in^2/ft	in.	ft. **	in^2/ft	in^2/ft	in.	ft.	in.	in.
Precast Junction Box (PJB)	3x3	0.23	0.23	6	0.19	0.19	6	N/A	0.37	0.37	9	0.29	0.29	6	0.24	0.24	6	N/A	0.37	0.37	9	3.5	36	36
	4x4	0.29	0.29	6	0.24	0.24	6	N/A	0.41	0.41	9	0.47	0.47	6	0.38	0.38	6	N/A	0.41	0.41	9	4.5	48	48
	3x5	0.29	0.18	6	0.19	0.35	6	N/A	0.48	0.48	9	0.39	0.18	6	0.23	0.59	6	N/A	0.48	0.48	9	3.5	36/60	36/60
	4x5	0.36	0.18	6	0.22	0.34	6	N/A	0.42	0.42	9	0.53	0.26	6	0.39	0.59	6	N/A	0.42	0.42	9	4.5	48/60	48/60
	5x5	0.36	0.36	6	0.34	0.34	6	N/A	0.43	0.43	9	0.62	0.62	6	0.59	0.59	6	N/A	0.43	0.43	9	5.5	60	60
	5x6	0.27	0.27	9	0.34	0.45	6	N/A	0.48	0.48	9	0.47	0.45	9	0.38	0.54	8	N/A	0.48	0.48	9	5.5	60/72	60/72
	6x6	0.27	0.27	9	0.45	0.45	6	N/A	0.56	0.56	9	0.52	0.52	9	0.54	0.54	8	N/A	0.56	0.56	9	6.5	72	72
	8x8	0.46	0.46	9	0.51	0.51	8	N/A	0.45	0.45	12	0.87	0.87	9	0.59	0.59	10	N/A	0.45	0.45	12	8.5	96	72
Precast Base (PB)	3x3	0.23	0.23	6	0.19	0.19	6	N/A	N/A	N/A	N/A	0.29	0.29	6	0.24	0.24	6	N/A	N/A	N/A	N/A	3.5	36	36
	4x4	0.29	0.29	6	0.24	0.24	6	N/A	N/A	N/A	N/A	0.47	0.47	6	0.38	0.38	6	N/A	N/A	N/A	N/A	4.5	48	48
	3x5	0.29	0.18	6	0.19	0.35	6	3x3	0.30	0.34	9	0.39	0.18	6	0.23	0.59	6	3x3	0.40	0.40	9	3.5	36/60	36/60
	4x5	0.36	0.18	6	0.22	0.34	6	3x3	0.30	0.30	9	0.53	0.26	6	0.39	0.59	6	3x3	0.46	0.37	9	4.5	48/60	48/60
	4x5	0.36	0.18	6	0.22	0.34	6	4x4	0.30	0.30	9	0.53	0.26	6	0.39	0.59	6	4x4	0.39	0.39	9	4.5	48/60	48/60
	4x5	0.36	0.18	6	0.22	0.34	6	48"	0.39	0.39	9	0.53	0.26	6	0.39	0.59	6	48"	0.47	0.47	9	4.5	48/60	48/60
	4x5	0.36	0.18	6	0.22	0.34	6	3x5	0.33	0.40	9	0.53	0.26	6	0.39	0.59	6	3x5	0.48	0.48	9	4.5	48/60	48/60
	5x5	0.36	0.36	6	0.34	0.34	6	3x3	0.34	0.34	9	0.62	0.62	6	0.59	0.59	6	3x3	0.53	0.53	9	5.5	60	60
	5x5	0.36	0.36	6	0.34	0.34	6	4x4	0.36	0.36	9	0.62	0.62	6	0.59	0.59	6	4x4	0.64	0.64	9	5.5	60	60
	5x5	0.38	0.38	6	0.34	0.34	6	48"	0.36	0.36	9	0.62	0.62	6	0.59	0.59	6	48"	0.64	0.64	9	5.5	60	60
	5x5	0.36	0.36	6	0.34	0.34	6	3x5	0.34	0.40	9	0.62	0.62	6	0.59	0.59	6	3x5	0.53	0.53	9	5.5	60	60
	5x6	0.31	0.31	9	0.34	0.45	6	3x3	0.34	0.34	9	0.47	0.45	9	0.38	0.54	8	3x3	0.61	0.50	9	5.5	60/72	60/72
	5x6	0.27	0.27	9	0.34	0.45	6	4x4	0.36	0.45	9	0.47	0.45	9	0.38	0.54	8	4x4	0.74	0.57	9	5.5	60/72	60/72
	5x6	0.29	0.29	9	0.34	0.45	6	48"	0.36	0.45	9	0.47	0.45	9	0.38	0.54	8	48"	0.74	0.57	9	5.5	60/72	60/72
	5x6	0.29	0.29	9	0.34	0.45	6	3x5	0.45	0.45	9	0.47	0.45	9	0.38	0.54	8	3x5	0.61	0.61	9	5.5	60/72	60/72
	6x6	0.29	0.29	9	0.45	0.45	6	3x3	0.41	0.41	9	0.52	0.52	9	0.54	0.54	8	3x3	0.74	0.74	9	6.5	72	72
	6x6	0.27	0.27	9	0.45	0.45	6	4x4	0.45	0.45	9	0.52	0.52	9	0.54	0.54	8	4x4	0.87	0.87	9	6.5	72	72
	6x6	0.29	0.29	9	0.45	0.45	6	48"	0.45	0.45	9	0.52	0.52	9	0.54	0.54	8	48"	0.87	0.87	9	6.5	72	72
	6x6	0.29	0.29	9	0.45	0.45	6	3x5	0.45	0.45	9	0.52	0.52	9	0.54	0.54	8	3x5	0.87	0.87	9	6.5	72	72
	8x8	0.52	0.52	9	0.51	0.51	8	3x3	0.61	0.61	12	0.91	0.91	9	0.70	0.70	10	3x3	0.85	0.85	12	8.5	96	72
	8x8	0.52	0.52	9	0.51	0.51	8	4x4	0.70	0.70	12	0.87	0.87	9	0.70	0.70	10	4x4	1.01	1.01	12	8.5	96	72
	8x8	0.52	0.52	9	0.51	0.51	8	48"	0.70	0.70	12	0.87	0.87	9	0.70	0.70	10	48"	1.01	1.01	12	8.5	96	72
	8x8	0.52	0.52	9	0.51	0.51	8	3x5	0.70	0.85	12	0.87	0.87	9	0.70	0.70	10	3x5	1.01	1.01	12	8.5	96	72

** Unless otherwise indicated.

FABRICATION NOTES:
1. Maximum spacing of reinforcement is 8".
2. At manufacturer's option, provide cast or cored holes or thin wall panels (KO) to the maximum diameter shown for each. When no penetration is required, it is acceptable to provide a wall with no sectional reduction.

GENERAL NOTES:
1. Precast Junction Box consists of base slab, base unit, risers (as required), and below grade slab. See sheet PJB for details.
2. Precast Base consists of base slab, base unit, risers (as required), reducing slab (as required), and reduced risers (as required). See sheet PB for details.
3. Min Height shown is for stock base units. Use stock base units whenever practical. Smaller height base units can be used in special installation circumstances, when noted elsewhere in the plans. Absolute minimum height of base units is 2'-6".

HL93 LOADING

Texas Department of Transportation | Bridge Division Standard

DESIGN DATA FOR PRECAST BASE AND JUNCTION BOX

PDD

FILE: prestd10-20.dgn	DN: TxDOT	CK: TxDOT	DW: TxDOT	CK: TxDOT
©TxDOT February 2020	CONT	SECT	JOB	HIGHWAY
REVISIONS				
	DIST	COUNTY		SHEET NO.

DISCLAIMER:
The use of this standard is governed by the "Texas Engineering Practice Act". No warranty of any kind is made by TxDOT for any purpose whatsoever. TxDOT assumes no responsibility for the conversion of this standard to other formats or for incorrect results or damages resulting from its use.

DATE:
FILE:

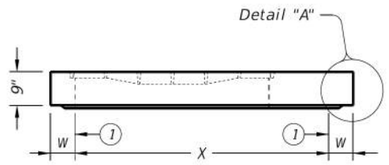

STYLE 'FG'

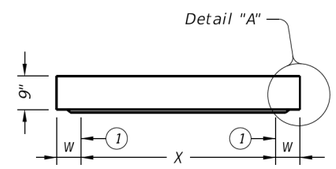

ELEVATION VIEW

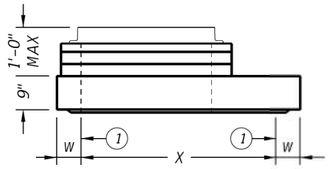

ELEVATION VIEW

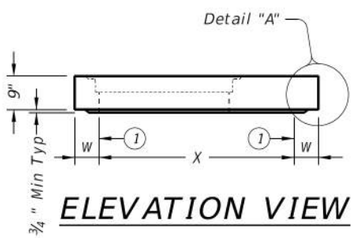

ELEVATION VIEW

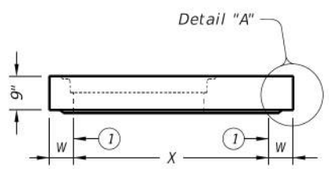

ELEVATION VIEW

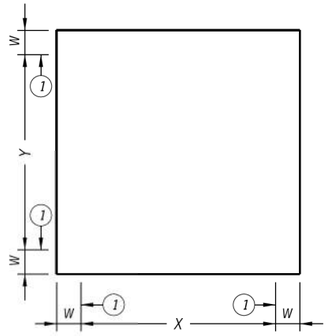

PLAN VIEW
NO OPENINGS
STYLE 'SL'

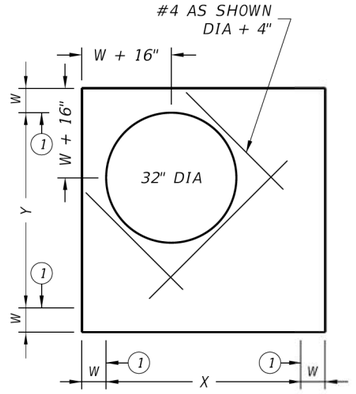

PLAN VIEW
SHIP LOOSE RING & COVER
STYLE 'RH'

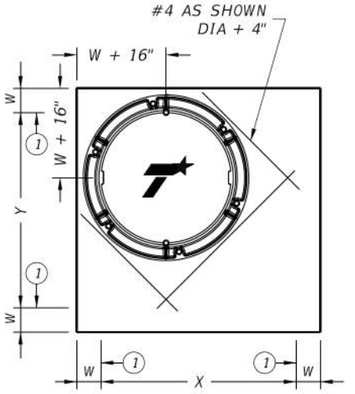

PLAN VIEW
32" DIA CAST-IN RING & COVER
STYLE 'RC'

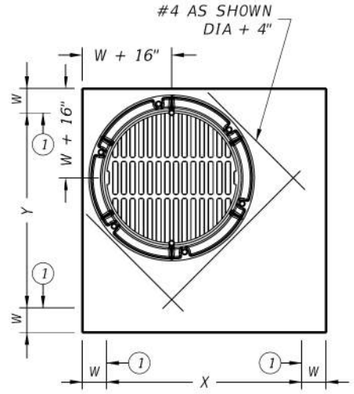

PLAN VIEW
32" DIA CAST-IN RING & GRATE
STYLE 'RG'

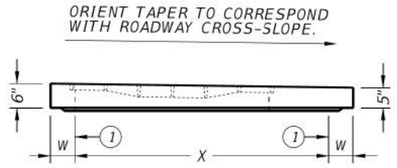

STYLE 'SFG'
ELEVATION VIEW

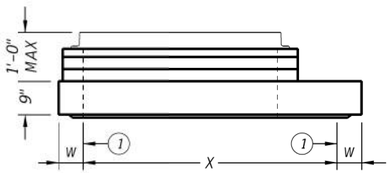

ELEVATION VIEW

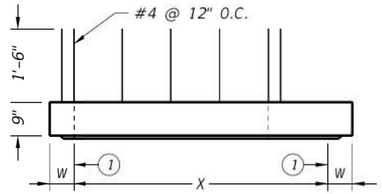

ELEVATION VIEW

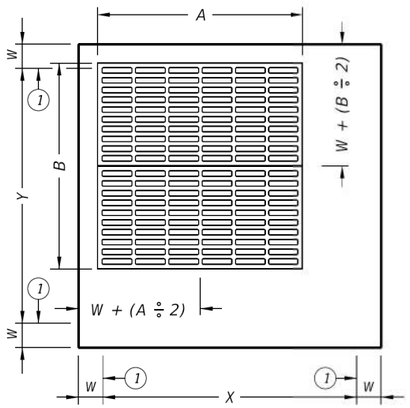

PLAN VIEW
CAST-IN FRAME & GRATE
STYLES 'FG' & 'SFG'

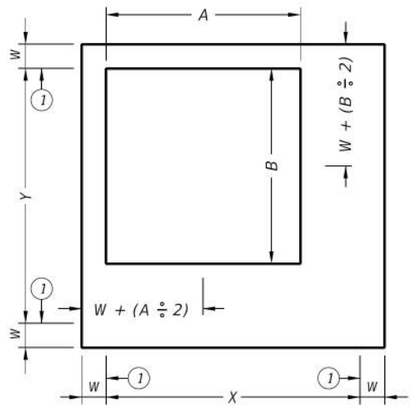

PLAN VIEW
SHIP LOOSE FRAME & GRATE
STYLE 'SH'

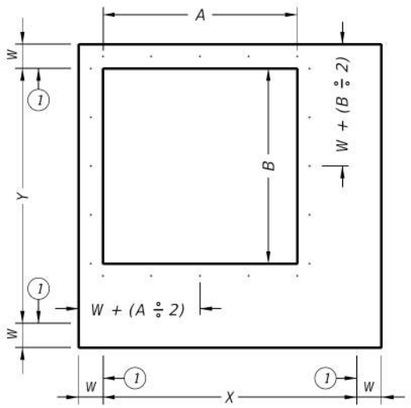

PLAN VIEW
EXPOSED REBAR
STYLE 'S1'

(1) Matches inside face of wall of precast base or riser below inlet.

HL93 LOADING SHEET 1 OF 2

Texas Department of Transportation

Bridge Division Standard

PRECAST SLAB LID

PSL

FILE: prestd05-20.dgn	DN: TxDOT	CK: TxDOT	DW: TxDOT	CK: TxDOT
©TxDOT February 2020	CONT	SECT	JOB	HIGHWAY
REVISIONS				
	DIST	COUNTY		SHEET NO.

DISCLAIMER:
The use of this standard is governed by the "Texas Engineering Practice Act". No warranty of any kind is made by TxDOT for any purpose whatsoever. TxDOT assumes no responsibility for the conversion of this standard to other formats or for incorrect results or damages resulting from its use.

DATE:
FILE:

Style	Size (X x Y)	W (2)	A x B (nominal)	Short Span Reinf Steel Area	Long Span Reinf Steel Area
SL	3'x3'	6"	n/a	0.37 in²/ft	0.37 in²/ft
RH,RC,RG,SH,S1,FG	3'x3'	6"	3'x3' or 32" Dia	0.37 in²/ft	0.37 in²/ft
SFG	3'x3'	6"	3'x3'	0.32 in²/ft	0.32 in²/ft
SL	4'x4'	6"	n/a	0.34 in²/ft	0.34 in²/ft
RH,RC,RG,SH,S1,FG	4'x4'	6"	3'x3' or 32" Dia	0.41 in²/ft	0.41 in²/ft
SH,S1,FG	4'x4'	6"	4'x4'	0.41 in²/ft	0.41 in²/ft
SFG	4'x4'	6"	4'x4'	0.32 in²/ft	0.32 in²/ft
SL	3'x5'	6"	n/a	0.39 in²/ft	0.39 in²/ft
RH,RC,RG,SH,S1,FG	3'x5'	6"	3'x3' or 32" Dia	0.48 in²/ft	0.48 in²/ft
SH,S1,FG	3'x5'	6"	3'x5'	0.48 in²/ft	0.48 in²/ft
SFG	3'x5'	6"	3'x5'	0.32 in²/ft	0.32 in²/ft
SL	4'x5'	6"	n/a	0.42 in²/ft	0.42 in²/ft
RH,RC,RG,SH,S1,FG	4'x5'	6"	3'x3' or 32" Dia	0.42 in²/ft	0.42 in²/ft
SH,S1,FG	4'x5'	6"	4'x4'	0.63 in²/ft	0.63 in²/ft
SH,S1,FG	4'x5'	6"	3'x5'	0.66 in²/ft	0.66 in²/ft
SL	5'x5'	6"	n/a	0.36 in²/ft	0.36 in²/ft
RH,RC,RG,SH,S1,FG	5'x5'	6"	3'x3' or 32" Dia	0.43 in²/ft	0.43 in²/ft
SH,S1,FG	5'x5'	6"	4'x4'	0.63 in²/ft	0.63 in²/ft
SH,S1,FG	5'x5'	6"	3'x5'	0.63 in²/ft	0.63 in²/ft
SL	5'x6'	6"/8"	n/a	0.48 in²/ft	0.48 in²/ft
RH,RC,RG,SH,S1,FG	5'x6'	6"/8"	3'x3' or 32" Dia	0.48 in²/ft	0.48 in²/ft
SH,S1,FG	5'x6'	6"/8"	4'x4'	0.60 in²/ft	0.60 in²/ft
SH,S1,FG	5'x6'	6"/8"	3'x5'	0.60 in²/ft	0.60 in²/ft
SL	6'x6'	6"/8"	n/a	0.43 in²/ft	0.43 in²/ft
RH,RC,RG,SH,S1,FG	6'x6'	6"/8"	3'x3' or 32" Dia	0.56 in²/ft	0.56 in²/ft
SH,S1,FG	6'x6'	6"/8"	4'x4'	0.56 in²/ft	0.56 in²/ft
SH,S1,FG	6'x6'	6"/8"	3'x5'	0.59 in²/ft	0.59 in²/ft
SL	8'x8'	8"/10"	n/a	0.45 in²/ft	0.45 in²/ft
RH,RC,RG,SH,S1,FG	8'x8'	8"/10"	3'x3' or 32" Dia	0.45 in²/ft	0.45 in²/ft
SH,S1,FG	8'x8'	8"/10"	4'x4'	0.45 in²/ft	0.45 in²/ft
SH,S1,FG	8'x8'	8"/10"	3'x5'	0.45 in²/ft	0.45 in²/ft

(2) See sheet PDD for corresponding wall thickness (W) of base unit or riser.

Construct cast-in-place reinforced concrete apron, when shown elsewhere in plans. Use Class "A" concrete. Apron is subsidiary to PSL. Apron is 1'-6" Min width around precast zone drain.

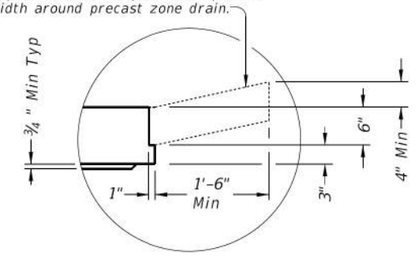

DETAIL "A"

(Reinforcing not shown for clarity)

When an apron is to be cast around PSL, use detail above to create an apron ledge on all 4 sides.

FABRICATION NOTES:

1. Locate penetration (Style 'RH'), ring and cover (Style 'RC'), ring and grate (Style 'RG'), and frame and grate (Style 'FG') in a corner. Only one penetration is allowed per slab lid.
2. Provide Class "H" concrete in accordance with Item 421 and having a minimum compressive strength of 5,000 psi.
3. Provide Grade 60 reinforcing steel or equivalent area of WWR.
4. Provide clear cover of ¾" to reinforcing from lower outside shoulder of slab for structural reinforcement, and 2" from top of slab for shrinkage and temperature reinforcement. Place short span reinforcing closest to surface.
5. Slabs with a thickness of 8" or greater require shrinkage and temperature reinforcing. Provide steel area = 0.11 in²/ft each way.
6. No substitution is allowed for diagonal #4 bars around openings.
7. Design tongue and groove joints for full closure on both shoulders. Minimum spigot depth is ¾".
8. Provide lifting devices in conformance with Manufacturer's recommendations.

INSTALLATION NOTES:

1. Precast slab lids are intended for direct traffic and may be placed in roadway.
2. Seal tongue and groove joints with preformed or bulk mastic in conformance with Manufacturer's recommendations. Tongue and groove joints may be grouted no more than 1" between each section, or ½ the joint depth, whichever is greater.
3. Do not grout rubber gasket joints without Manufacturer's recommendation.
4. Initial installation of grade adjustment rings for Styles 'RH' and 'SH' is limited to 1'-0" Max as shown.
5. Grade adjustment rings for Styles 'RH' and 'SH' may be increased to 2'-0" Max when future construction affects final grade of structure. Make adjustments greater than 2'-0" with additional risers. Adjustments can be made up to Max depth shown on sheet PDD. Structure must be evaluated if Max depth will be exceeded.
6. Orient long dimension of grate slots perpendicular to traffic, unless noted otherwise on plans

GENERAL NOTES:

1. Designed according to ASTM C913.
2. Payment for lid is per Item 465, "Junction Boxes, Manholes, and Inlets" by type, style, size, and opening size (when applicable).

Cover dimensions are clear dimensions, unless noted otherwise.

HL93 LOADING SHEET 2 OF 2

Texas Department of Transportation | Bridge Division Standard

PRECAST SLAB LID

PSL

FILE: prestd05-20.dgn	DN: TxDOT	CK: TxDOT	DW: TxDOT	CK: TxDOT
©TxDOT February 2020	CONT	SECT	JOB	HIGHWAY
REVISIONS				
	DIST	COUNTY		SHEET NO.
				216

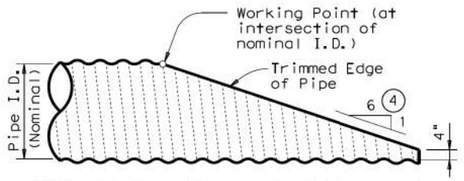

NOTE: All Cross Pipes, calculations, and dimensions are based on the pipe culverts mitered as shown in this detail. Alternate styles of mitered ends will require that appropriate adjustments be made to the values presented on this standard.

SIDE ELEVATION OF TYPICAL PIPE CULVERT MITER

(Showing Corrugated Metal Pipe Culvert.)
(Details at Concrete Pipe Culvert are similar.)

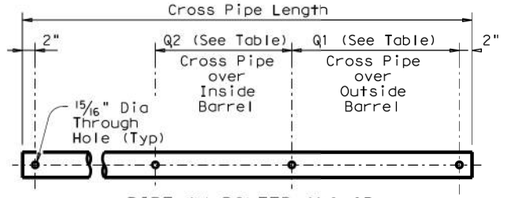

PIPE W/ BOLTED ANCHOR

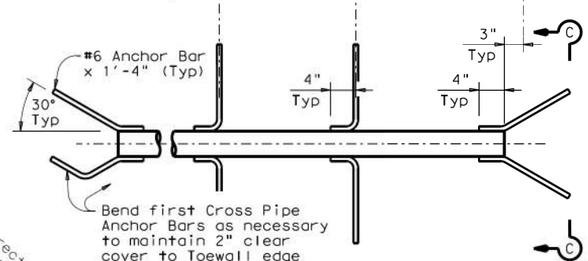

PIPE W/ ANCHOR BARS

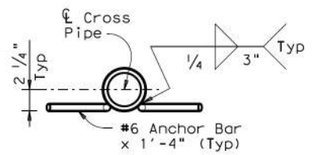

SECTION C-C

CROSS PIPE DETAILS

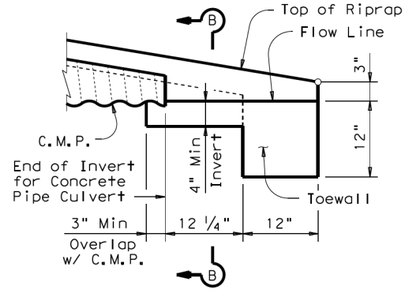

DETAIL "A"

(Showing Invert with Corrugated Metal Pipe Culvert. Concrete Pipe Culvert details are similar. Cross Pipes not shown for clarity.)

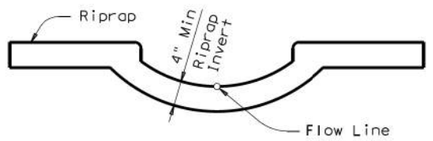

SECTION B-B

(Cross Pipes not shown for clarity.)

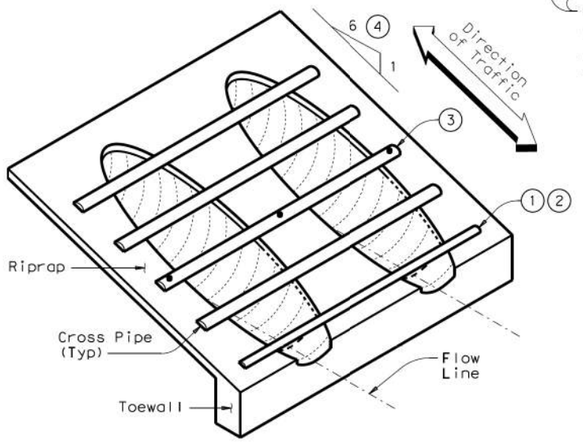

ISOMETRIC VIEW OF TYPICAL INSTALLATION

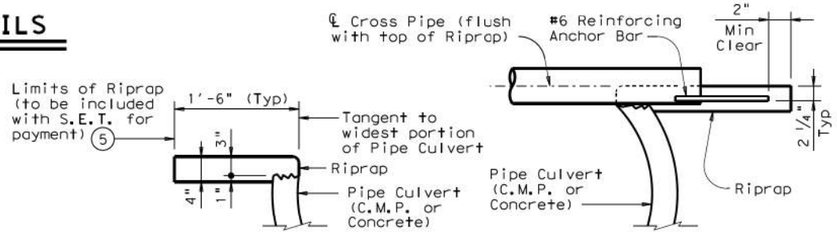

SHOWING TYPICAL PIPE CULVERT & RIPRAP

SHOWING CROSS PIPE WITH ANCHOR BAR

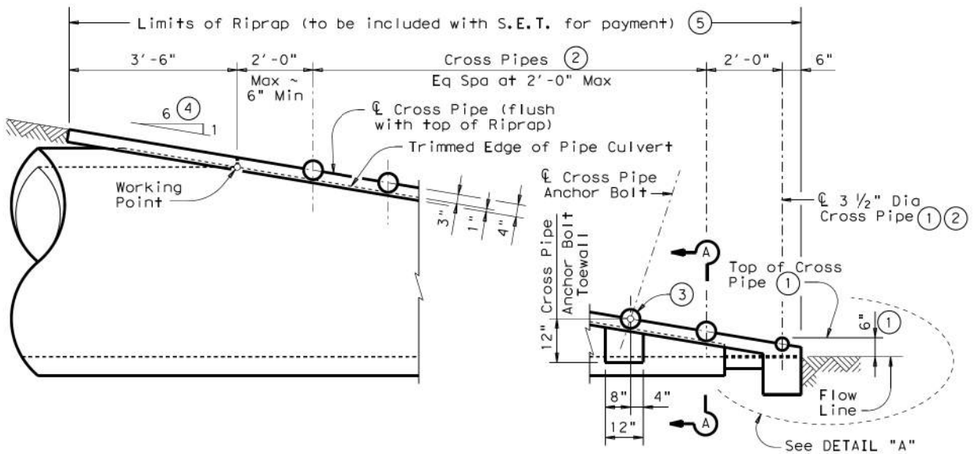

SIDE ELEVATION OF CAST-IN-PLACE CONCRETE

(Showing Concrete Pipe Culvert.)
(Details at Corrugated Metal Pipe Culvert are similar.)

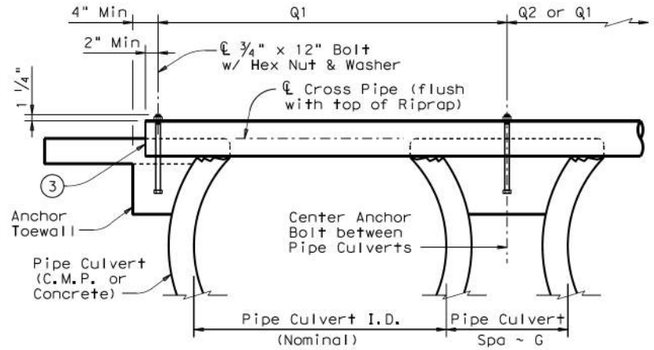

SHOWING CROSS PIPE WITH BOLTED ANCHOR

SECTION A-A

CROSS PIPE LENGTHS, REQUIRED PIPE SIZES, & RIPRAP QUANTITIES 2

Nominal Culvert I.D.	Conc Riprap (CY) 6	Pipe Culvert Spa ~ G	Single Barrel ~ Q1	Multi-Barrel ~ Q1	Q2	Conditions for use of Cross Pipes	Cross Pipe Size
12"	0.6	9"	N/A	2'- 1"	1'- 9"	3 or more Pipe Culverts	3" Std (3.500" O.D.)
15"	0.7	11"	N/A	2'- 5"	2'- 2"		
18"	0.8	1'- 2"	N/A	2'-10"	2'- 8"		
21"	0.9	1'- 4"	N/A	3'- 2"	3'- 1"		
24"	0.9	1'- 7"	N/A	3'- 6"	3'- 7"		
27"	1.0	1'- 8"	N/A	3'-10"	3'-11"	3 or more Pipe Culverts	3 1/2" Std (4.000" O.D.)
30"	1.1	1'-10"	N/A	4'- 2"	4'- 4"	2 or more Pipe Culverts	
33"	1.2	1'-11"	4'- 2"	4'- 5"	4'- 8"	All Pipe Culverts	
36"	1.3	2'- 1"	4'- 5"	4'- 9"	5'- 1"	All Pipe Culverts	4" Std (4.500" O.D.)
42"	1.5	2'- 4"	4'-11"	5'- 5"	5'-10"		
48"	1.7	2'- 7"	5'- 5"	6'- 0"	6'- 7"	All Pipe Culverts	5" Std (5.563" O.D.)
54"	2.0	3'- 0"	5'-11"	6'- 9"	7'- 6"		
60"	2.2	3'- 3"	6'- 5"	7'- 4"	8'- 3"		
66"	2.4	3'- 3"	6'-11"	7'-10"	8'- 9"		
72"	2.7	3'- 4"	7'- 5"	8'- 5"	9'- 4"		

1. The proper installation of the first Cross Pipe is critical for vehicle safety. The top of the first Cross Pipe must be placed at no more than 6" above the flow line.
2. Size of Cross Pipes, except the first bottom pipe, shall be as shown in the PIPE SIZE table. The first bottom pipe shall be 3 1/2" Standard Pipe (4" O.D.).
3. The third Cross Pipe from the bottom of the Culvert shall always be installed using a bolted connection. Care shall be taken to ensure that Riprap concrete does not flow into the Cross Pipe so as to permit disassembly of the bolted connection to allow cleanout access. At the Contractor's option, all other Cross Pipes may also be installed using the bolted connection details.
4. Match Cross Slope as shown elsewhere in the plans. Cross Slope of 6:1 or flatter is required for vehicle safety.
5. Riprap placed beyond the limits shown will be paid as Concrete Riprap in accordance with Item 432, "Riprap".
6. Quantities shown are for one end of one reinforced Concrete Pipe Culvert. For multiple pipe culverts or for Corrugated Metal Pipe Culverts, quantities will need to be adjusted. Riprap quantities are for Contractor's information only.

GENERAL NOTES:

Cross Pipes are designed for a traversing load of 10,000 pounds at yield as recommended by Research Report 280-2F, "Safety Treatment of Roadside Parallel-Drainage Structures", Texas Transportation Institute, March 1981.

Safety End Treatments shown herein are intended for use in those installations where out of control vehicles are likely to traverse the openings approximately perpendicular to the Cross Pipes.

Riprap and all necessary inverts shall be Concrete Riprap conforming to the requirements of Item 432, "Riprap".

Synthetic fibers listed on the "Fibers for Concrete" Material Producer List (MPL) may be used in lieu of steel reinforcing in riprap concrete unless noted otherwise.

Payment for riprap and toewall is included in the Price Bid for each Safety End Treatment.

Cross Pipes shall conform to the requirements of ASTM A53 (Type E or S, Grade B), ASTM A500 (Grade B), or API 5LX52.

Bolts and nuts shall conform to ASTM A307.

All steel components, except concrete reinforcing, shall be galvanized after fabrication. Galvanizing damaged during transport or construction shall be repaired in accordance with the specifications.

Texas Department of Transportation

Bridge Division Standard

SAFETY END TREATMENT

FOR 12" DIA TO 72" DIA
PIPE CULVERTS
TYPE II ~ PARALLEL DRAINAGE

SETP-PD

FILE: setppdse.dgn	DN: GAF	CK: CAT	DW: JRP	CK: GAF
©TxDOT February 2010	CONT	SECT	JOB	HIGHWAY
REVISIONS				
11-10: Add note for synthetic fibers.	DIST	COUNTY		SHEET NO.
				217

DISCLAIMER:
The use of this standard is governed by the "Texas Engineering Practice Act". No warranty of any kind is made by TxDOT for any purpose whatsoever. TxDOT assumes no responsibility for the conversion of this standard to other formats or for incorrect results or damages resulting from its use.

DATE:
FILE:

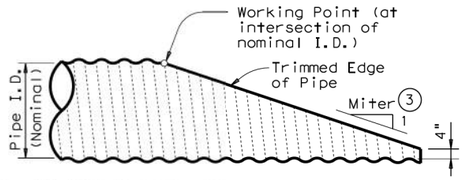

NOTE: All Pipe Runners, calculations, and dimensions are based on the pipe culverts mitered as shown in this detail. Alternate styles of mitered ends will require that appropriate adjustments be made to the values presented on this standard.

SIDE ELEVATION OF TYPICAL PIPE CULVERT MITER

(Showing Corrugated Metal Pipe Culvert.
Details of Concrete Pipe Culvert are similar.)

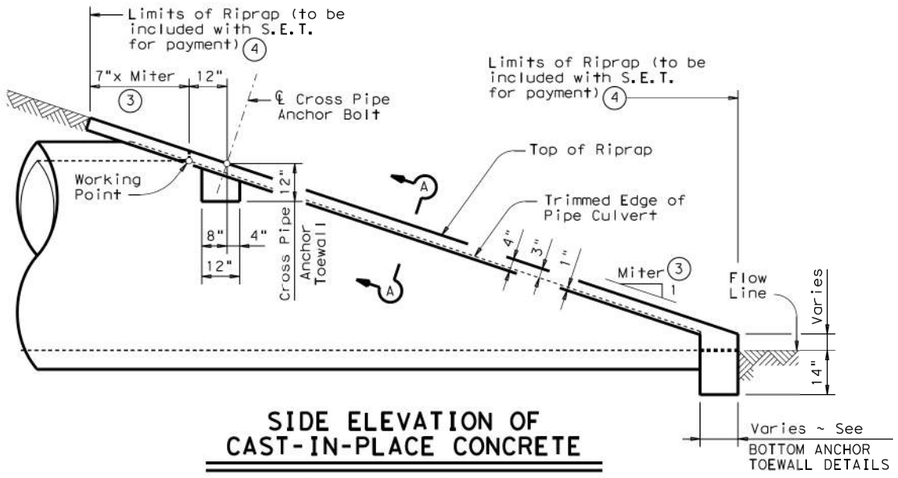

SIDE ELEVATION OF CAST-IN-PLACE CONCRETE

(Showing Concrete Pipe Culvert.
Details of Corrugated Metal Pipe Culvert are similar.
Pipe Runners not shown for clarity)

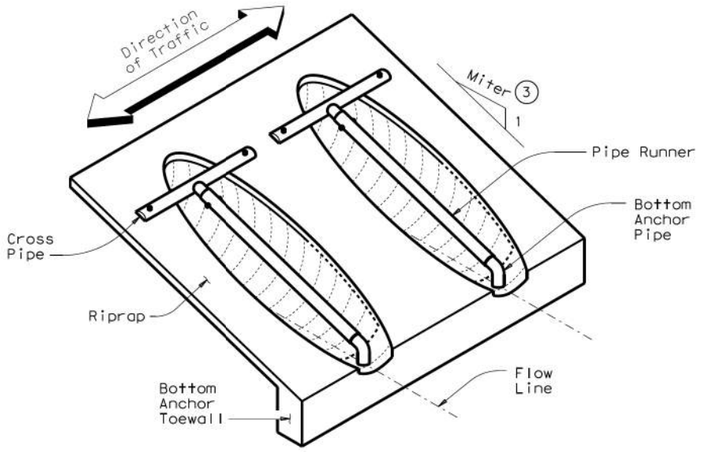

ISOMETRIC VIEW OF TYPICAL INSTALLATION

(Showing installation with no skew.)

CROSS PIPE LENGTHS & PIPE RUNNER LENGTHS (1)(2)

Nominal Culvert I.D.	Pipe Culvert Spa ~ G	Cross Pipe Length	Pipe Runner Length											
			3:1 Side Slope				4:1 Side Slope				6:1 Side Slope			
			0° Skew	15° Skew	30° Skew	45° Skew	0° Skew	15° Skew	30° Skew	45° Skew	0° Skew	15° Skew	30° Skew	45° Skew
24"	1'- 7"	3'- 5"	N/A	N/A	N/A	5'-10"	N/A	N/A	N/A	8'- 1"	N/A	N/A	N/A	12'- 9"
27"	1'- 8"	3'- 8"	N/A	N/A	5'- 5"	6'-11"	N/A	N/A	7'- 7"	9'- 7"	N/A	N/A	11'-11"	14'-11"
30"	1'-10"	3'-11"	N/A	N/A	6'- 4"	8'- 0"	N/A	N/A	8'- 9"	11'- 0"	N/A	N/A	13'- 8"	17'- 0"
33"	1'-11"	4'- 2"	6'- 2"	6'- 5"	7'- 3"	9'- 1"	8'- 6"	8'-10"	10'- 0"	12'- 5"	13'- 3"	13'- 9"	15'- 5"	19'- 2"
36"	2'- 1"	4'- 5"	6'-11"	7'- 3"	8'- 2"	10'- 2"	9'- 6"	9'-11"	11'- 2"	13'-10"	14'- 9"	15'- 3"	17'- 2"	21'- 3"
42"	2'- 4"	4'-11"	8'- 6"	8'-10"	9'-11"	12'- 4"	11'- 7"	12'- 0"	13'- 6"	16'- 8"	17'- 9"	18'- 5"	20'- 8"	25'- 7"
48"	2'- 7"	5'- 5"	10'- 1"	10'- 5"	11'- 9"	N/A	13'- 7"	14'- 2"	15'-10"	N/A	20'- 9"	21'- 6"	24'- 2"	N/A
54"	3'- 0"	5'-11"	11'- 8"	12'- 1"	N/A	N/A	15'- 8"	16'- 3"	N/A	N/A	23'-10"	24'- 8"	N/A	N/A
60"	3'- 3"	6'- 5"	13'- 3"	N/A	N/A	N/A	17'- 9"	N/A	N/A	N/A	26'-10"	N/A	N/A	N/A

TYPICAL PIPE CULVERT MITERS (3)

Side Slope	0° Skew	15° Skew	30° Skew	45° Skew
3:1	3:1	3.106:1	3.464:1	4.243:1
4:1	4:1	4.141:1	4.619:1	5.657:1
6:1	6:1	6.212:1	6.928:1	8.485:1

CONDITIONS WHERE PIPE RUNNERS ARE NOT REQUIRED (2)

Nominal Culvert I.D.	Single Pipe Culvert	Multiple Pipe Culverts
12" thru 21"	Skews thru 45°	Skews thru 45°
24"	Skews thru 45°	Skews thru 30°
27"	Skews thru 30°	Skews thru 15°
30"	Skews thru 15°	Skews thru 15°
33"	Skews thru 15°	Always required
36"	Normal (No Skew)	Always required
42" to 60"	Always required	Always required

STANDARD PIPE SIZES & MAX PIPE RUNNER LENGTHS (1)

Pipe Size	Pipe O.D.	Pipe I.D.	Max Pipe Runner Length
2" STD	2.375"	2.067"	N/A
3" STD	3.500"	3.068"	10'- 0"
4" STD	4.500"	4.026"	19'- 8"
5" STD	5.563"	5.047"	34'- 2"

ESTIMATED CONCRETE RIPRAP QUANTITIES (CY) (5)

Nominal Culvert I.D.	3:1 Side Slope				4:1 Side Slope				6:1 Side Slope			
	0° Skew	15° Skew	30° Skew	45° Skew	0° Skew	15° Skew	30° Skew	45° Skew	0° Skew	15° Skew	30° Skew	45° Skew
12"	0.4	0.4	0.5	0.5	0.5	0.5	0.5	0.6	0.7	0.7	0.7	0.8
15"	0.5	0.5	0.5	0.6	0.6	0.6	0.6	0.7	0.7	0.7	0.8	0.9
18"	0.5	0.5	0.6	0.6	0.6	0.7	0.7	0.8	0.8	0.8	0.9	1.0
21"	0.6	0.6	0.6	0.7	0.7	0.7	0.8	0.9	0.9	0.9	1.0	1.2
24"	0.6	0.7	0.7	0.8	0.8	0.8	0.8	1.0	1.0	1.0	1.1	1.3
27"	0.7	0.7	0.8	0.9	0.8	0.9	0.9	1.1	1.1	1.1	1.2	1.4
30"	0.8	0.8	0.8	0.9	0.9	0.9	1.0	1.2	1.2	1.2	1.3	1.6
33"	0.8	0.8	0.9	1.0	1.0	1.0	1.1	1.3	1.3	1.4	1.5	1.7
36"	0.9	0.9	0.9	1.1	1.1	1.1	1.2	1.4	1.4	1.5	1.6	1.8
42"	1.0	1.0	1.1	1.3	1.2	1.3	1.3	1.6	1.6	1.7	1.8	2.1
48"	1.1	1.1	1.2	N/A	1.4	1.4	1.5	N/A	1.9	1.9	2.1	N/A
54"	1.3	1.3	N/A	N/A	1.6	1.6	N/A	N/A	2.1	2.1	N/A	N/A
60"	1.4	N/A	N/A	N/A	1.7	N/A	N/A	N/A	2.3	N/A	N/A	N/A

(1) Size of Pipe Runner shall be as shown in the tables. Cross Pipe shall be the same size as the Pipe Runner. Cross Pipe Stub Out and Bottom Anchor Pipe shall be the next smaller size pipe as shown in the STANDARD PIPE SIZES table.

(2) This standard allows for the placement of only one pipe runner across each culvert pipe opening. In order to limit the clear opening to be traversed by an errant vehicle, the following conditions must be met:

For 60" culvert pipes, the skew must not exceed 0°.
For 54" culvert pipes, the skew must not exceed 15°.
For 48" culvert pipes, the skew must not exceed 30°.
For all culvert pipe sizes 42" and less, the skew must not exceed 45°.

If the above conditions cannot be met, the designer should consider using a safety end treatment with flared wings. For further information, refer to the TxDOT "Roadway Design Manual".

(3) Miter = Slope of Mitered Pipe Culvert End

(4) Riprap placed beyond the limits shown will be paid as Concrete Riprap in accordance with Item 432, "Riprap".

(5) Quantities shown are for one end of one reinforced Concrete Pipe Culvert. For multiple Pipe Culverts or for Corrugated Metal Pipe Culverts, quantities will need to be adjusted. Riprap quantities are for Contractor's information only.

DISCLAIMER:
The use of this standard is governed by the "Texas Engineering Practice Act". No warranty of any kind is made by TxDOT for any purpose whatsoever. TxDOT assumes no responsibility for the conversion of this standard to other formats or for incorrect results or damages resulting from its use.

DATE:
FILE:

SHEET 1 OF 2

Texas Department of Transportation

Bridge Division Standard

SAFETY END TREATMENT

FOR 12" DIA TO 60" DIA
PIPE CULVERTS
TYPE II ~ CROSS DRAINAGE

SETP-CD

FILE: setpcdse.dgn	DN: GAF	CK: CAT	DW: JRP	CK: GAF
©TxDOT February 2010	CONT	SECT	JOB	HIGHWAY
REVISIONS				
11-10: Add note for synthetic fibers.	DIST	COUNTY		SHEET NO.
				218

DISCLAIMER:
The use of this standard is governed by the "Texas Engineering Practice Act". No warranty of any kind is made by TxDOT for any purpose whatsoever. TxDOT assumes no responsibility for the conversion of this standard to other formats or for incorrect results or damages resulting from its use.

DATE:
FILE:

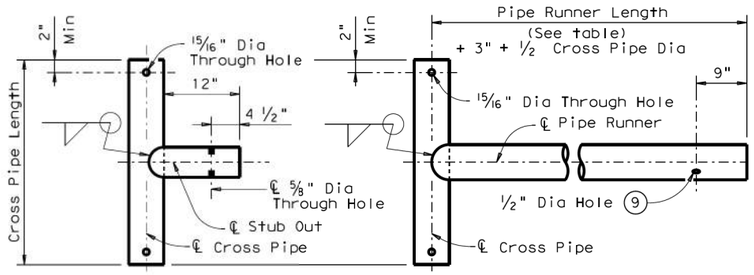

OPTION A1 OPTION A2

CROSS PIPE AND CONNECTIONS DETAILS

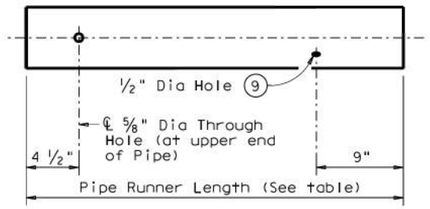

NOTE: The separate Pipe Runner shown is required when Cross Pipe Connection Option A1 is used.

PIPE RUNNER DETAILS

OPTION B1 OPTION B2

BOTTOM ANCHOR PIPE DETAILS (10)

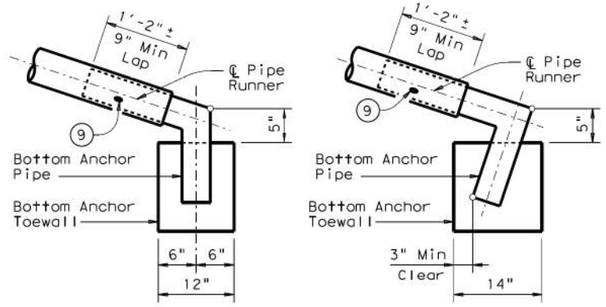

OPTION B1 OPTION B2

BOTTOM ANCHOR TOEWALL DETAILS

(Culvert & Riprap not shown for clarity)

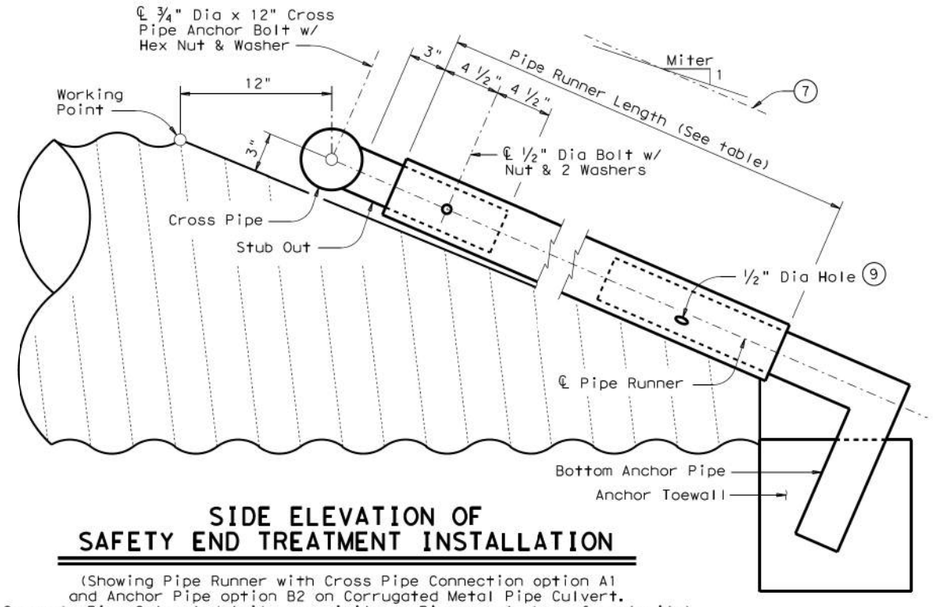

SIDE ELEVATION OF SAFETY END TREATMENT INSTALLATION

(Showing Pipe Runner with Cross Pipe Connection option A1 and Anchor Pipe option B2 on Corrugated Metal Pipe Culvert. Concrete Pipe Culvert details are similar. Riprap not shown for clarity)

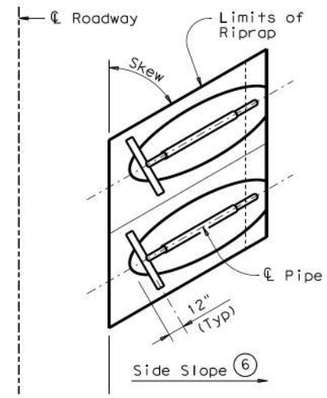

PLAN OF SKEWED INSTALLATION

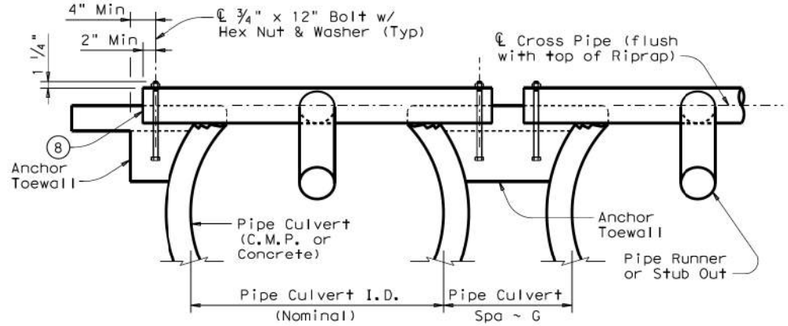

SHOWING CROSS PIPE & ANCHOR TOEWALL

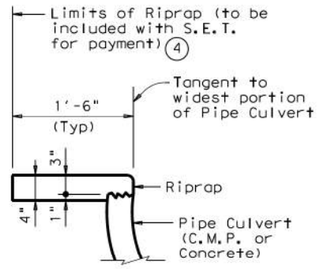

SHOWING TYPICAL PIPE CULVERT & RIPRAP

SECTION A-A

(4) Riprap placed beyond the limits shown will be paid as Concrete Riprap in accordance with Item 432, "Riprap".

(6) Recommended values of side slope are 3:1, 4:1, & 6:1. All quantities, calculations, and dimensions shown herein are based on these recommended values. Slope of 3:1 or flatter is required for vehicle safety.

(7) Note that actual slope of Pipe Runner may vary slightly from Side Slope of Riprap and trimmed Culvert Pipe edge.

(8) Care shall be taken to ensure that Riprap concrete does not flow into the Cross Pipe so as to permit disassembly of the bolted connection to allow cleanout access.

(9) After installation, the 1/2" hole shall be inspected to ensure that the lap of the Pipe Runner with the Bottom Anchor Pipe is adequate.

(10) At fabricator's option, a heat bend to a smooth 5" radius or a manufactured elbow (of the same material as the Runner) may be substituted for the mitered and welded joint in the Bottom Anchor Pipe.

GENERAL NOTES:

Pipe Runners are designed for a traversing load of 1,800 pounds at yield as recommended by Research Report 280-1, "Safety Treatment of Roadside Cross-Drainage Structures", Texas Transportation Institute, March 1981.

The Safety End Treatments shown herein are intended for use in those installations where out of control vehicles are likely to traverse the openings approximately perpendicular to the Pipe Runners.

Riprap and all necessary inverts shall be Concrete Riprap conforming to the requirements of Item 432, "Riprap".

Synthetic fibers listed on the "Fibers for Concrete" Material Producer List (MPL) may be used in lieu of steel reinforcing in riprap concrete unless noted otherwise.

Payment for riprap and toewall is included in the Price Bid for each Safety End Treatment.

Pipe Runners, Cross Pipes, and Anchor Pipes shall conform to the requirements of ASTM A53 (Type E or S, Grade B), ASTM A500 (Grade B), or API 5LX52.

Bolts and nuts shall conform to ASTM A307.

All steel components, except concrete reinforcing, shall be galvanized after fabrication. Galvanizing damaged during transport or construction shall be repaired in accordance with the specifications.

Texas Department of Transportation

Bridge Division Standard

SAFETY END TREATMENT

FOR 12" DIA TO 60" DIA PIPE CULVERTS
TYPE II ~ CROSS DRAINAGE

SETP-CD

FILE: setpcdse.dgn	DN: GAF	CK: CAT	DW: JRP	CK: GAF
©TxDOT February 2010	CONT	SECT	JOB	HIGHWAY
REVISIONS				
11-10: Add note for synthetic fibers.	DIST	COUNTY		SHEET NO.
				219

DISCLAIMER:
The use of this standard is governed by the "Texas Engineering Practice Act". No warranty of any kind is made by TxDOT for any purpose whatsoever. TxDOT assumes no responsibility for the conversion of this standard to other formats or for incorrect results or damages resulting from its use.

DATE:
FILE:

REQUIREMENTS FOR CULVERT PIPES AND SAFETY PIPE RUNNERS

Pipe I.D.	RCP Wall "B" Thickness	TP Wall Thickness (8)	"D" (1)	Slope	Min Length of Unit	Single Pipe Skew	Single Pipe Pipe Runners Required	Multiple Pipes Skew	Multiple Pipes Pipe Runners Required
12"	2"	1.15"	17.00"	3:1	2' – 11"	≤ 45°	No	≤ 45°	No
				4:1	3' – 6"				
				6:1	4' – 9"				
15"	2 ¼"	1.30"	20.50"	3:1	3' – 8"	≤ 45°	No	≤ 45°	No
				4:1	4' – 7"				
				6:1	6' – 5"				
18"	2 ½"	1.60"	24.00"	3:1	4' – 6"	≤ 45°	No	≤ 45°	No
				4:1	5' – 8"				
				6:1	8' – 0"				
24"	3"	1.95"	31.00"	3:1	6' – 2"	≤ 45°	No	= 30°	No
				4:1	7' – 10"			> 30°	Yes
				6:1	11' – 3"				
30"	3 ½"	2.65"	38.50"	3:1	7' – 10"	= 15°	No	= 15°	No
				4:1	10' – 1"	> 15°	Yes	> 15°	Yes
				6:1	14' – 8"				
36"	4"	2.75"	45.50"	3:1	9' – 5"	= 0°	No	≥ 0°	Yes
				4:1	12' – 3"	> 0°	Yes		
				6:1	17' – 11"				
42"	4 ½"	N/A	52.50"	3:1	11' – 1"	≥ 0°	Yes	≥ 0°	Yes
				4:1	14' – 5"				
				6:1	21' – 2"				

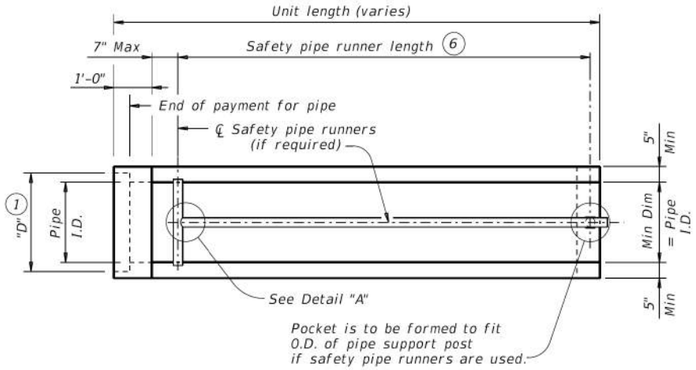

PLAN

(Showing bell end connection.)

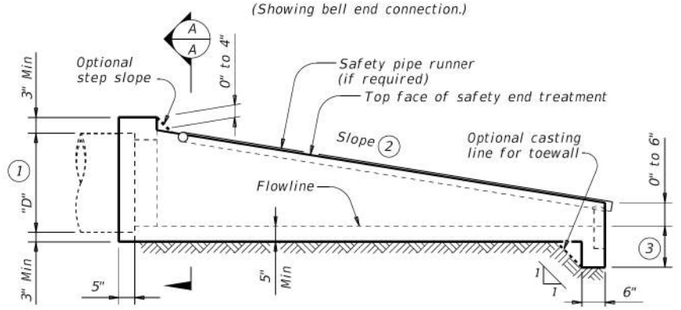

LONGITUDINAL ELEVATION

(Showing bell end connection.)

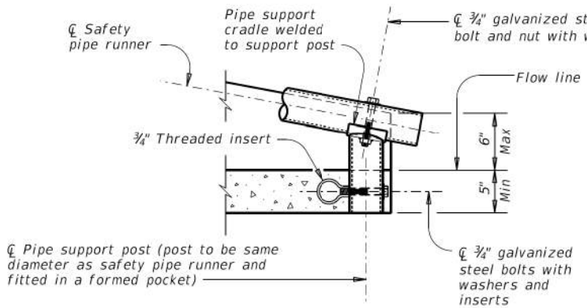

END DETAIL FOR INSTALLATION OF SAFETY PIPE RUNNERS

(If required)

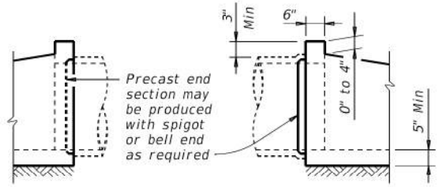

OPTIONAL JOINT FOR RCP

(Showing joint between RCP and precast safety end treatment)

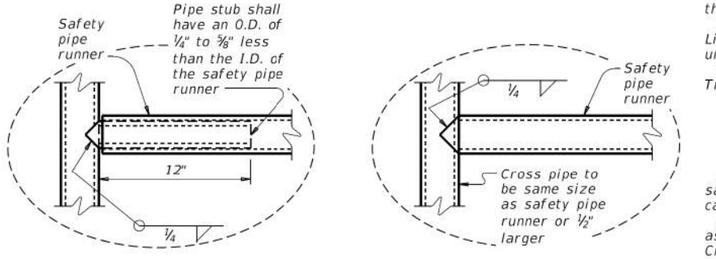

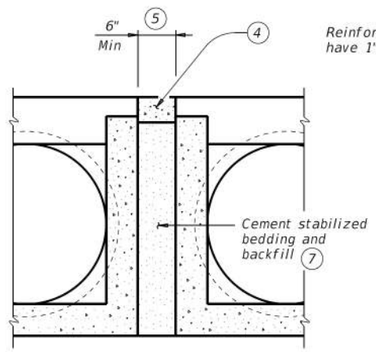

MULTIPLE PIPE INSTALLATION

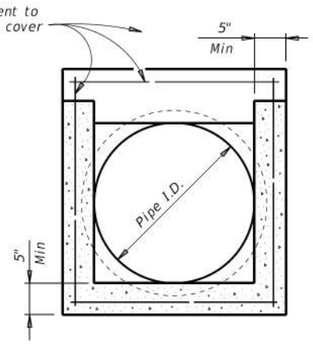

OPTION WITH SQUARE BOTTOM

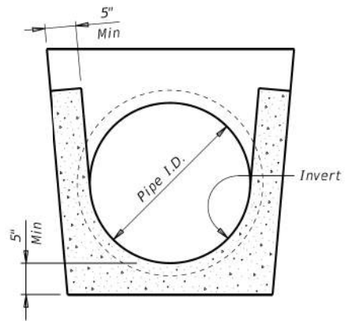

OPTION WITH INVERT BOTTOM

SECTION A-A

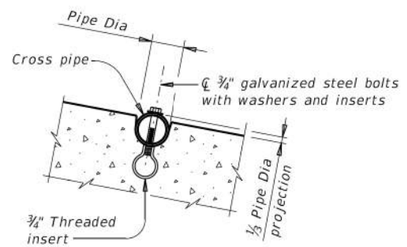

INSTALLATION DETAIL FOR SAFETY PIPE RUNNERS

(If required)

SAFETY PIPE RUNNER DIMENSIONS

Max Safety Pipe Runner Length	Required Pipe Runner Size: Pipe Size	Pipe O.D.	Pipe I.D.
11' – 2"	3" STD	3.500"	3.068"
15' – 6"	3 ½" STD	4.000"	3.548"
20' – 10"	4" STD	4.500"	4.026"
35' – 4"	5" STD	5.563"	5.047"

(1) Dimension "D" is based on reinforced concrete pipe (RCP) meeting the requirements of ASTM C-76, Class III, (RCP Wall "B" thickness). Adjust "D" for any other wall thickness used. For thermoplastic pipe (TP) take into account the annular space requirements for grouted connections.

(2) Slope as shown elsewhere in plans. Slope of 3:1 or flatter is required for vehicle safety.

(3) Toewall to be used only when dimension is shown elsewhere in the plans.

(4) Fill the top 4" of void between precast end treatments with concrete riprap. Concrete riprap is considered subsidiary to the Item 467, "Safety End Treatment".

(5) Adjust clear distance between pipes to provide for the minimum distance between safety end treatments.

(6) Measured along slope.

(7) Provide cement stabilized bedding and backfill in accordance with the Item 400, "Excavation and Backfill for Structures". Bedding and backfill is considered subsidiary to the Item 467, "Safety End Treatment". When concrete riprap is specified around the safety end treatment, backfill as directed by Engineer.

(8) Thermoplastic pipe wall thickness may vary. Adjust accordingly. Thermoplastic pipe requires the safety end treatments to have a bell end for grouted connections.

GENERAL NOTES:

Precast safety end treatment for reinforced concrete pipe (RCP), and thermoplastic pipe (TP) may be used for TYPE II end treatment as specified in Item "Safety End Treatment".

When precast safety end treatment is used as a Contractor's alternate to mitered RCP, riprap will not be required unless noted otherwise on the plans.

Synthetic fibers listed on the "Fibers for Concrete" Material Producer List (MPL) may be used in lieu of steel reinforcing in riprap concrete unless noted otherwise.

Manufacture this product in accordance with Item 467, "Safety End Treatment" except as noted below :

A. Provide minimum reinforcing of #4 at 6" (Grade 40) or #4 at 9" (Grade 60) each way or 6"x6" – D12 x D12 or 5"x5" – D10 x D10 welded wire reinforcement (WWR).
B. For precast (steel formed) sections, provide Class "C" concrete (f'c = 3,600 psi).

At the option and expense of the Contractor, the next larger size of safety end treatment may be furnished as long as the "D" dimension cast is that of the required size of pipe.

Pipe runners are designed for a traversing load of 1,800 Lbs at yield as recommended by Research Report 280-1, "Safety Treatment of Roadside Cross-Drainage Structures", Texas Transportation Institute, March 1981.

Provide safety pipe runners, cross pipes, pipe support posts, and pipe stubs meeting the requirements of ASTM A53 (Type E or S, Grade B), ASTM A500 (Grade B), or API 5LX52.

Galvanize all steel components except reinforcing steel after fabrication. Repair galvanizing damaged during transport or construction in accordance with the specifications.

Connect RCP using the Optional Joint for RCP detail shown or in accordance with Item 464 "Reinforced Concrete Pipe". Connect TP by grouting. See PBGC standard for grouted connections with TP and precast safety end treatment.

Texas Department of Transportation

Bridge Division Standard

PRECAST SAFETY END TREATMENT

TYPE II ~ CROSS DRAINAGE

PSET-SC

FILE: psetscss-20.dgn	DN: RLW	CK: KLR	DW: JTR	CK: GAF
©TxDOT February 2020	CONT	SECT	JOB	HIGHWAY
REVISIONS				
	DIST	COUNTY		SHEET NO.
				220

DISCLAIMER:
The use of this standard is governed by the "Texas Engineering Practice Act". No warranty of any kind is made by TxDOT for any purpose whatsoever. TxDOT assumes no responsibility for the conversion of this standard to other formats or for incorrect results or damages resulting from its use.

DATE:
FILE:

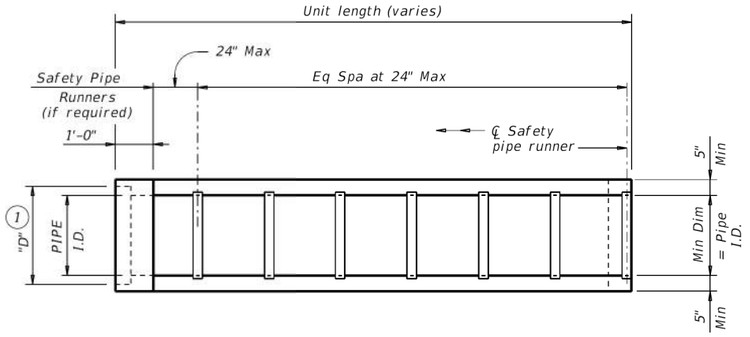

PLAN

(Showing bell end connection.)

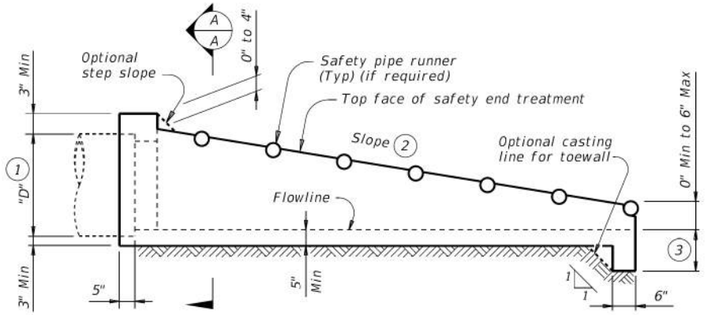

LONGITUDINAL ELEVATION

(Showing bell end connection.)

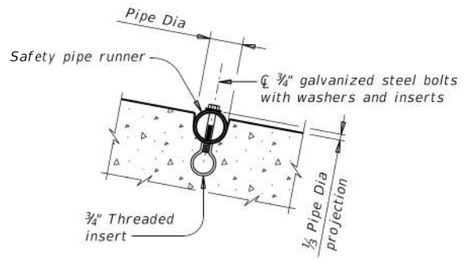

INSTALLATION DETAIL FOR SAFETY PIPE RUNNERS

(If required)

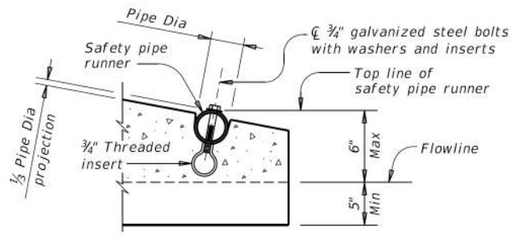

OPTION A

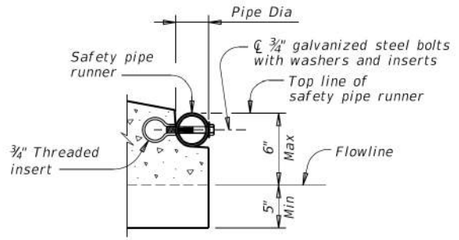

OPTION B

END DETAILS FOR INSTALLATION OF SAFETY PIPE RUNNERS

(If required)

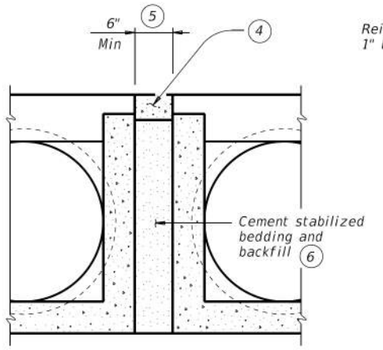

MULTIPLE PIPE INSTALLATION

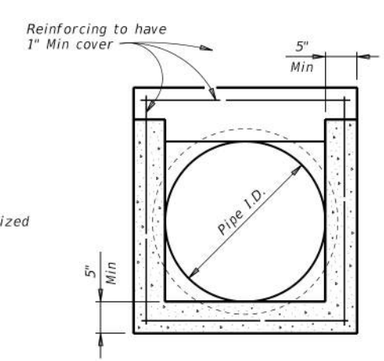

OPTION WITH SQUARE BOTTOM

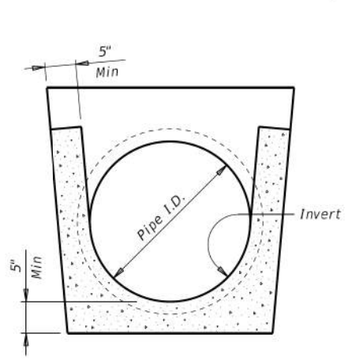

OPTION WITH INVERT BOTTOM

SECTION A-A

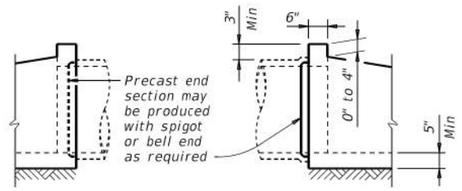

OPTIONAL JOINT FOR RCP

(Showing joint between RCP and precast safety end treatment.)

REQUIREMENTS FOR CULVERT PIPES AND SAFETY PIPE RUNNERS

Pipe I.D.	RCP Wall "B" Thickness	TP Wall Thickness (7)	"D" (1)	Slope	Min Length	Pipe Runners Required		Required Pipe Runner Size		
						Single Pipe	Multiple Pipe	Nominal Dia.	O.D.	I.D.
12"	2"	1.15"	17.00"	6:1	4' – 9"	No	Yes, for > 2 pipes	3" STD	3.500"	3.068"
15"	2 ¼"	1.30"	20.50"	6:1	6' – 5"	No	Yes, for > 2 pipes	3" STD	3.500"	3.068"
18"	2 ½"	1.60"	24.00"	6:1	8' – 0"	No	Yes, for > 2 pipes	3" STD	3.500"	3.068"
24"	3"	1.95"	31.00"	6:1	11' – 3"	No	Yes, for > 2 pipes	3" STD	3.500"	3.068"
30"	3 ½"	2.65"	38.50"	6:1	14' – 8"	No	Yes	4" STD	4.500"	4.026"
36"	4"	2.75"	45.50"	6:1	17' – 11"	Yes	Yes	4" STD	4.500"	4.026"
42"	4 ½"	N/A	52.50"	6:1	21' – 2"	Yes	Yes	4" STD	4.500"	4.026"

(1) Dimension "D" is based on reinforced concrete pipe (RCP) meeting the requirements of ASTM C-76, Class III, (RCP Wall "B" thickness). Adjust "D" for any other wall thickness used. For thermoplastic pipe (TP) take into account the annular space requirements for grouted connections.

(2) Slope as shown elsewhere in the plans. Slope of 6:1 or flatter is required for vehicle safety.

(3) Toewall to be used only when dimension is shown elsewhere in the plans.

(4) Fill the top 4" of void between precast end treatments with concrete riprap. Concrete riprap is considered subsidiary to the Item 467, "Safety End Treatment".

(5) Adjust clear distance between pipes to provide for the minimum distance between safety end treatments.

(6) Provide cement stabilized bedding and backfill in accordance with the Item 400, "Excavation and Backfill for Structures". Bedding and backfill is considered subsidiary to the Item 467, "Safety End Treatment". When concrete riprap is specified around the safety end treatment, backfill as directed by Engineer.

(7) Thermoplastic pipe wall thickness may vary. Adjust accordingly. Thermoplastic pipe requires the safety end treatments to have a bell end for grouted connections.

GENERAL NOTES:

Precast safety end treatment for reinforced concrete pipe (RCP), and thermoplastic pipe (TP) may be used for TYPE II end treatment as specified in Item "Safety End Treatment".

When precast safety end treatment is used as a Contractor's alternate to mitered RCP, riprap will not be required unless noted otherwise on the plans.

Synthetic fibers listed on the "Fibers for Concrete" Material Producer List (MPL) may be used in lieu of steel reinforcing in riprap concrete unless noted otherwise.

Manufacture this product in accordance with Item 467, "Safety End Treatment" except as noted below :

A. Provide minimum reinforcing of #4 at 6" (Grade 40) or #4 at 9" (Grade 60) each way or 6"x6" – D12 x D12 or 5"x5" – D10 x D10 welded wire reinforcement (WWR).

B. For precast (steel formed) sections, provide Class "C" concrete (f'c = 3,600 psi).

At the option and expense of the Contractor the next larger size of safety end treatment may be furnished; as long as the "D" dimension cast is that of the required size of pipe.

Pipe runners are designed for a traversing load of 10,000 Lbs at yield as recommended by Research Report 280-2F, "Safety Treatment of Roadside Parallel-Drainage Structures", Texas Transportation Institute, March 1981.

Provide pipe runners meeting the requirements of ASTM A53 (Type E or S, Grade B), ASTM A500 (Grade B), or API 5LX52.

Galvanize all steel components except reinforcing steel after fabrication. Repair galvanizing damaged during transport or construction in accordance with the specifications.

Connect RCP using the Optional Joint for RCP detail shown or in accordance with Item 464, "Reinforced Concrete Pipe". Connect TP by grouting. See PBGC standard for grouted connections with TP and precast safety end treatment.

Texas Department of Transportation

Bridge Division Standard

PRECAST SAFETY END TREATMENT

TYPE II ~ PARALLEL DRAINAGE

PSET-SP

FILE: psetspss-20.dgn	DN: RLW	CK: KLR	DW: JTR	CK: GAF
©TxDOT February 2020	CONT	SECT	JOB	HIGHWAY
REVISIONS				
	DIST	COUNTY		SHEET NO.
				221

DISCLAIMER:
The use of this standard is governed by the "Texas Engineering Practice Act". No warranty of any kind is made by TxDOT for any purpose whatsoever. TxDOT assumes no responsibility for the conversion of this standard to other formats or for incorrect results or damages resulting from its use.

DATE:
FILE:

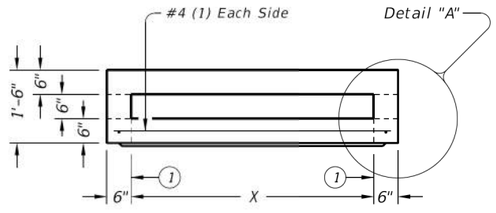

ELEVATION VIEW

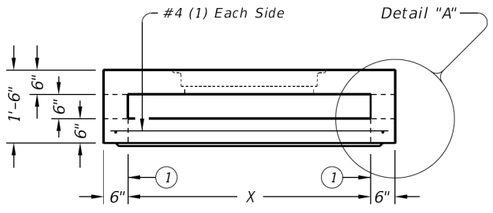

ELEVATION VIEW

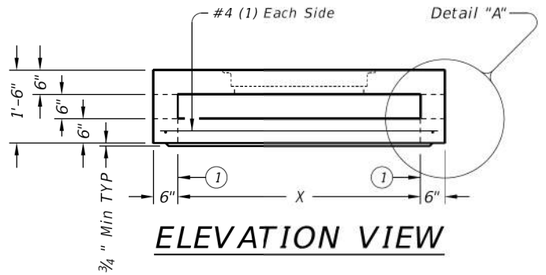

ELEVATION VIEW

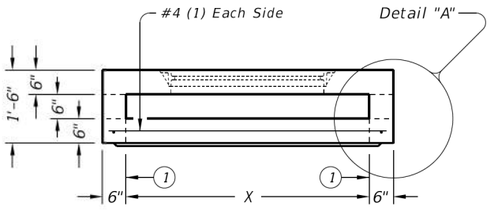

ELEVATION VIEW

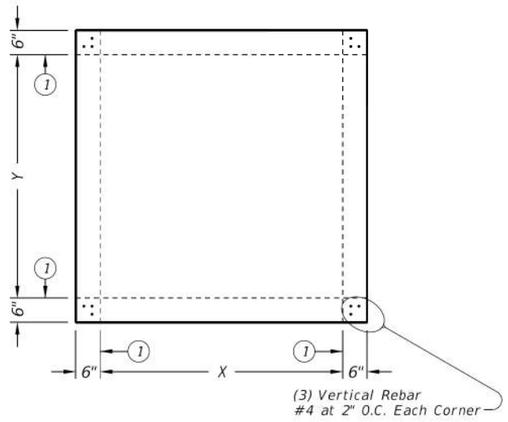

PLAN VIEW
NO OPENINGS

STYLE 'SL'

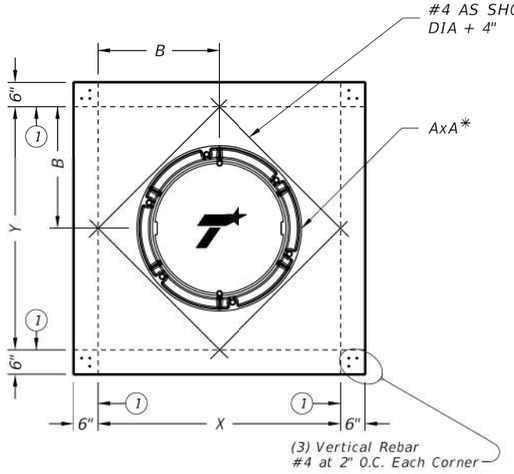

PLAN VIEW
32" DIA CAST-IN RING & COVER

STYLE 'RC'

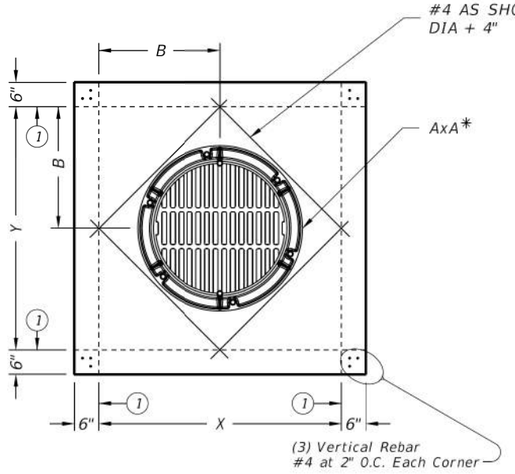

PLAN VIEW
32" DIA CAST-IN RING & GRATE

STYLE 'RG'

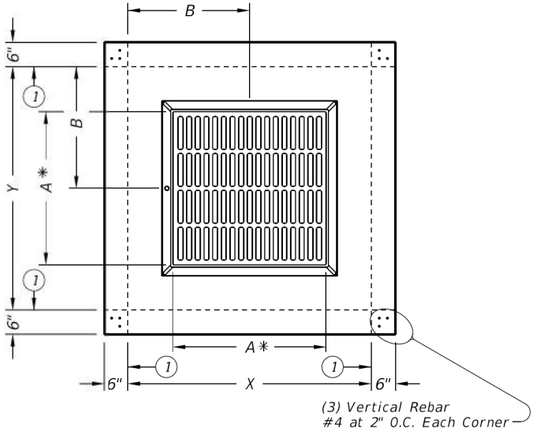

PLAN VIEW
CAST-IN FRAME & GRATE

STYLE 'FG'

(1) Matches inside face of wall of precast base or riser below inlet.

FABRICATION NOTES:
1. Provide Class "H" concrete in accordance with Item 421 and having a minimum compressive strength of 5,000 psi.
2. Provide Grade 60 reinforcing steel or equivalent area of WWR.
3. Provide clear cover of ¾" to reinforcing from bottom of slab for structural reinforcement. Place short span reinforcing closest to surface.
4. No substitution is allowed for diagonal #4 bars around openings.
5. Design tongue and groove joints for full closure on both shoulders. Minimum spigot depth is ¾".
6. Provide lifting devices in conformance with Manufacturer's recommendations.

INSTALLATION NOTES:
1. PAZD is for use in ditches and medians outside of the horizontal clearance (clear zone). Precast Area Zone Drain is not intended for direct traffic and may not be placed in roadway.
2. Seal tongue and groove joints with preformed or bulk mastic in conformance with Manufacturer's recommendations. Tongue and groove joints may be grouted no more than 1" between each section, or ½ the joint depth, whichever is greater.
3. Do not grout rubber gasket joints without Manufacturer's recommendation.

GENERAL NOTES:
1. Designed according to ASTM C913.
2. Payment for inlet is per Item 465, "Junction Boxes, Manholes, and Inlets" by type, style, size, and opening size (when applicable).

Construct cast-in-place reinforced concrete apron when shown elsewhere in plans. Use Class "A" concrete. Apron is subsidiary to PAZD. Apron is 1'-6" Min width around precast zone drain.

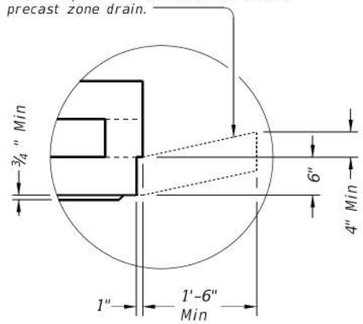

DETAIL "A"

(Reinforcing not shown for clarity)

When an apron is to be cast around PAZD, use detail above to create an apron ledge on all 4 sides.

Style	Size (X x Y)	A x A*	B x B	Short Span Reinf Steel Area	Long Span Reinf Steel Area
SL	3'x3'	n/a	n/a	0.37 in²/ft	0.37 in²/ft
RC,RG	3'x3'	32" Dia	1.5'x1.5'	0.37 in²/ft	0.37 in²/ft
FG	3'x3'	3'x3'	1.5'x1.5'	0.37 in²/ft	0.37 in²/ft
SL	4'x4'	n/a	n/a	0.34 in²/ft	0.34 in²/ft
RC,RG	4'x4'	32" Dia	2'x2'	0.34 in²/ft	0.34 in²/ft
FG	4'x4'	3'x3'	2'x2'	0.34 in²/ft	0.34 in²/ft
FG	4'x4'	4'x4'	2'x2'	0.34 in²/ft	0.34 in²/ft
SL	5'x5'	n/a	n/a	0.43 in²/ft	0.43 in²/ft
RC,RG	5'x5'	32" Dia	2.5'x2.5'	0.68 in²/ft	0.68 in²/ft
FG	5'x5'	3'x3'	2.5'x2.5'	0.43 in²/ft	0.43 in²/ft
FG	5'x5'	4'x4'	2.5'x2.5'	0.43 in²/ft	0.43 in²/ft

* Nominal frame/grate or ring/cover size.

Texas Department of Transportation

Bridge Division Standard

PRECAST AREA ZONE DRAIN

PAZD

FILE: prestd08-20.dgn	DN: TxDOT	CK: TxDOT	DW: TxDOT	CK: TxDOT
©TxDOT February 2020	CONT	SECT	JOB	HIGHWAY
REVISIONS	DIST	COUNTY		SHEET NO.
				222

DISCLAINER:
The use of this standard is governed by the "Texas Engineering Practice Act". No warranty of any kind is made by TxDOT for any purpose whatsoever. TxDOT assumes no responsibility for the conversion of this standard to other formats or for incorrect results or damages resulting from its use.

DATE:
FILE:

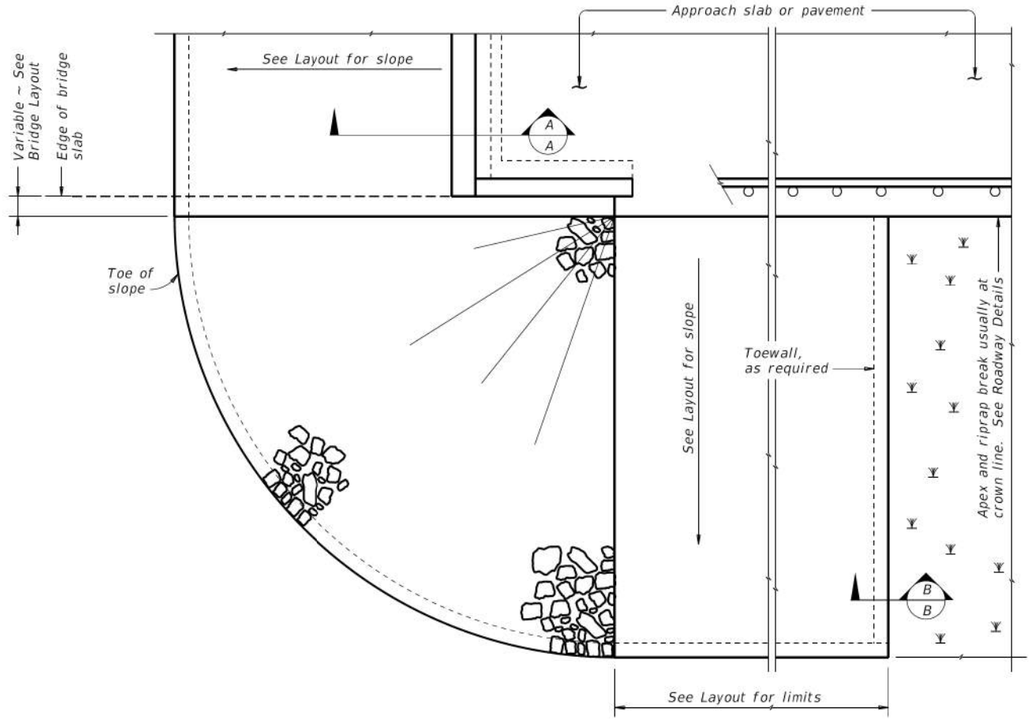

PLAN

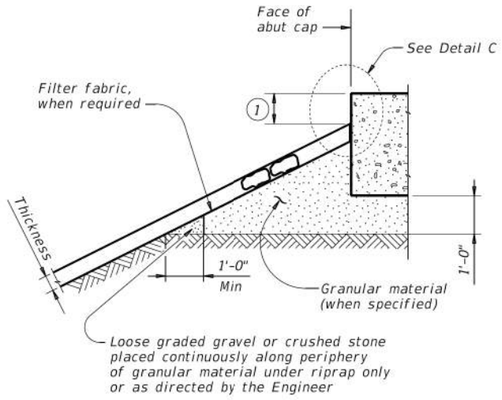

SECTION A-A AT CAP

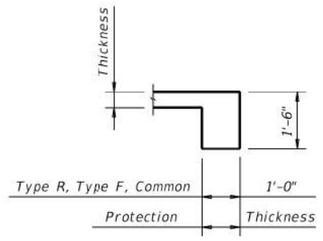

SECTION B-B

Provide toewall when shoulder drain is located adjacent to limits of stone riprap. Omit toewall when thickness of protection riprap is greater than 18".

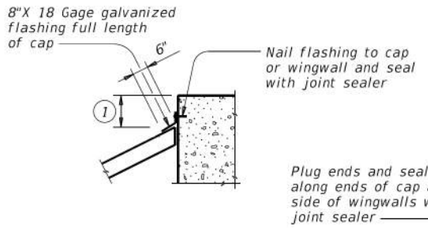

CAP OPTION A

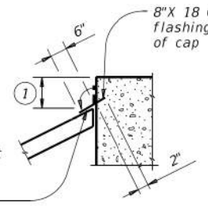

CAP OPTION B

DETAIL C

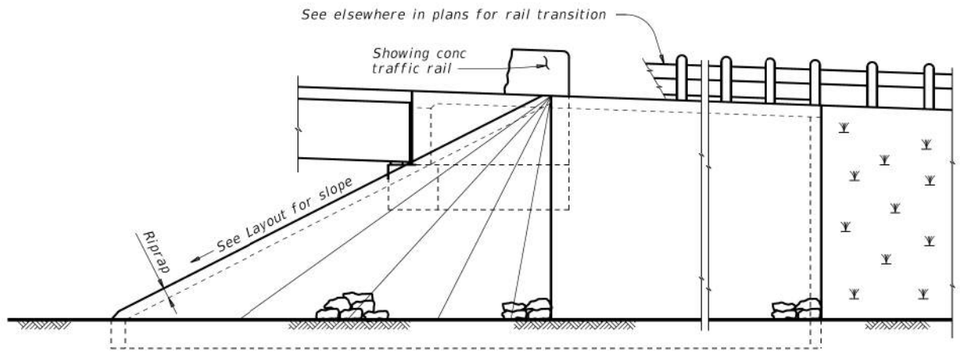

ELEVATION

(1) Top of cap to top of riprap dimension varies as directed by the Engineer. Provide 9" Min for beam/slab type bridges and 1'-6" for slab span, box beam, or slab beam bridges.

GENERAL NOTES:
Refer to Item 432, "Riprap" for stone size and gradation, and construction details. See Layout for limits and thickness of riprap specified.
See elsewhere in plans for locations and details of shoulder drains.

Texas Department of Transportation

Bridge Division Standard

STONE RIPRAP

SRR

FILE: srrstde1-19.dgn	DN: AES	CK: JGD	DW: BWH	CK: AES
©TxDOT April 2019	CONT	SECT	JOB	HIGHWAY
REVISIONS	DIST	COUNTY		SHEET NO. 223

DISCLAIMER:
The use of this standard is governed by the "Texas Engineering Practice Act". No warranty of any kind is made by TxDOT for any purpose whatsoever. TxDOT assumes no responsibility for the conversion of this standard to other formats or for incorrect results or damages resulting from its use.

DATE:
FILE:

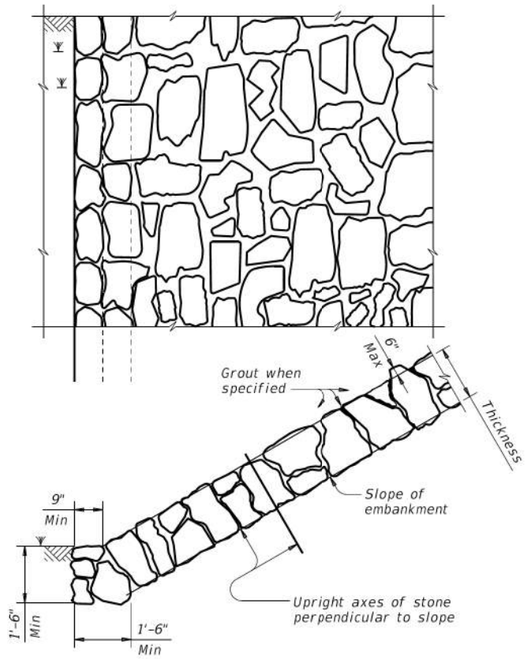

FIGURE 1 ~ TYPE R STONE RIPRAP

dry or grouted

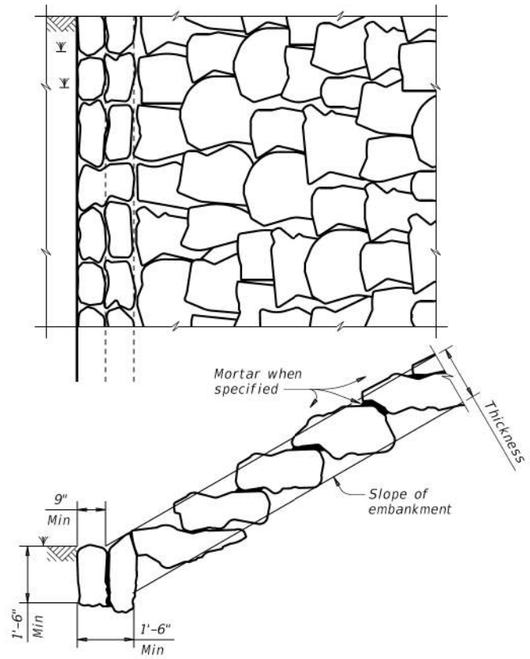

FIGURE 2 ~ TYPE F STONE RIPRAP

dry or mortared

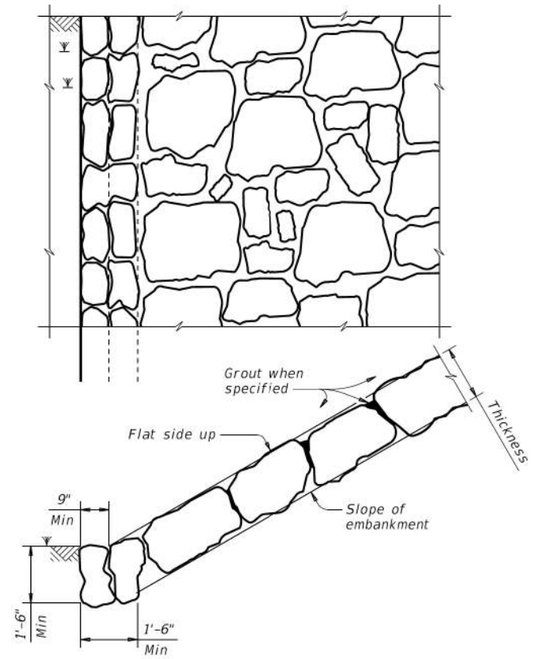

FIGURE 3 ~ TYPE F STONE RIPRAP

grouted

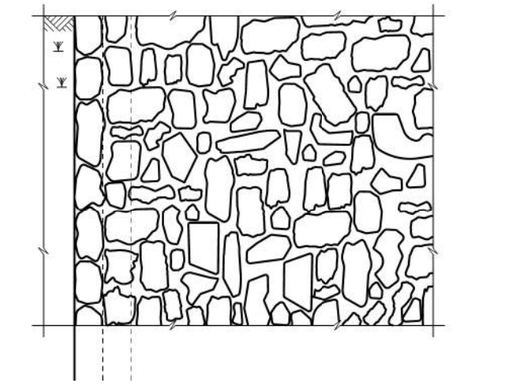

FIGURE 4 ~ COMMON STONE RIPRAP

dry or grouted

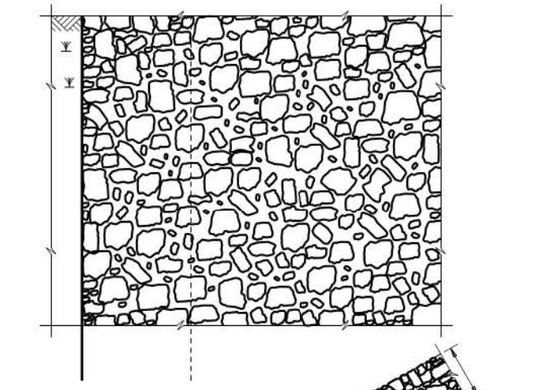

FIGURE 5 ~ PROTECTION STONE RIPRAP (5)

(2) Provide bedding material instead of filter fabric if shown elsewhere in plans. See Layout for thickness of bedding material.

(3) Minimum toe depth is the larger of the maximum scour depth or 2 times the riprap thickness.

(4) "Y" and Height need to be defined. See layout or detail sheet for values if this option is used.

(5) List Stone Protection as size (XX inch) and thickness (YY inch) on the layout.
Example: Riprap (Stone Protection) XX inch, Thickness = YY inch.

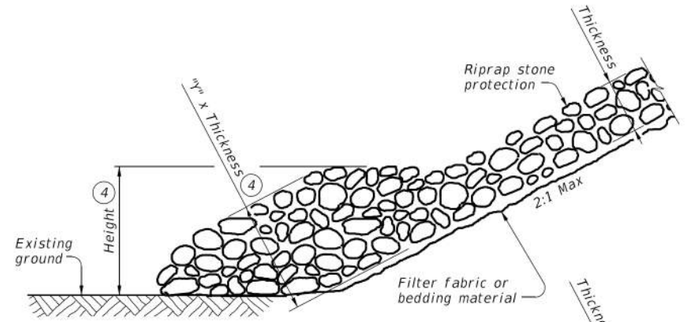

MOUNDED TOE

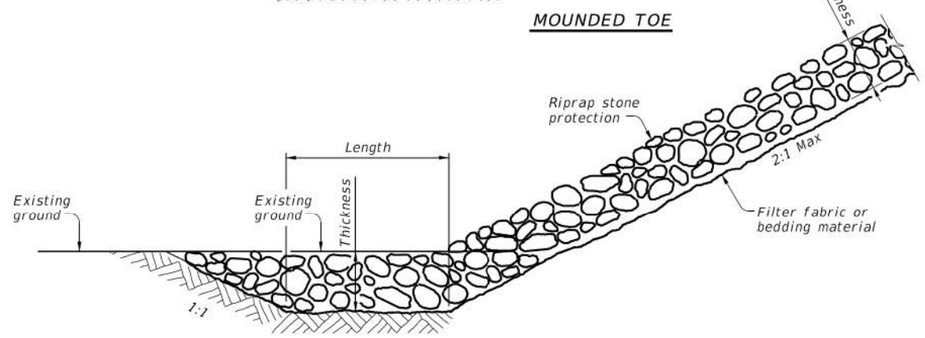

EXTENDED ROCK FILLED TRENCH

PROTECTION STONE RIPRAP TOE OPTIONS (5)

Texas Department of Transportation

Bridge Division Standard

STONE RIPRAP

SRR

FILE: srrstde1-19.dgn	DN: AES	CK: JGD	DW: BWH	CK: AES
©TxDOT April 2019	CONT	SECT	JOB	HIGHWAY
REVISIONS				
	DIST	COUNTY		SHEET NO.
				224

DISCLAIMER:
The use of this standard is governed by the "Texas Engineering Practice Act". No warranty of any kind is made by TxDOT for any purpose whatsoever. TxDOT assumes no responsibility for the conversion of this standard to other formats or for incorrect results or damages resulting from its use.

DATE:
FILE:

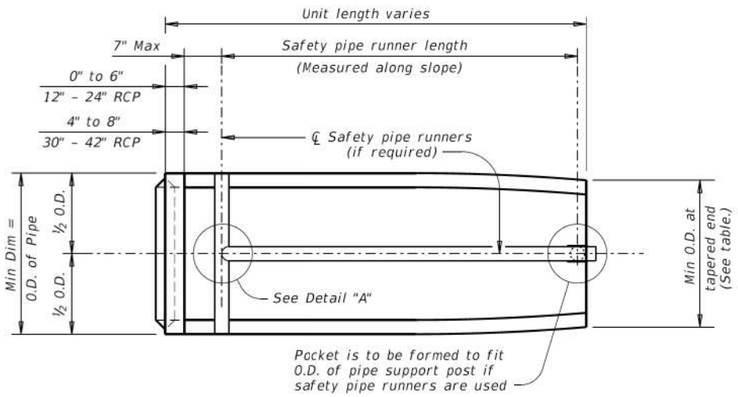

PLAN VIEW

(Showing spigot end connection.)

MAX SAFETY PIPE RUNNER LENGTHS AND REQUIRED SAFETY PIPE RUNNER SIZES

Max Safety Pipe Runner Length	Required Pipe Runner Size		
	Pipe Size	Pipe O.D.	Pipe I.D.
11' – 2"	3" STD	3.500"	3.068"
15' – 6"	3 ½" STD	4.000"	3.548"
20' – 10"	4" STD	4.500"	4.026"
35' – 4"	5" STD	5.563"	5.047"

(1) Slope as shown elsewhere in the plans. Slope of 3:1 or flatter is required for vehicle safety.

(2) Provide cement stabilized bedding and backfill in accordance with the Item, "Excavation and Backfill for Structures". Bedding and backfill is considered subsidiary to the Item "Safety End Treatment". When concrete riprap is specified around the safety end treatment, backfill as directed by Engineer.

(3) Fill the top 4" of void between precast end treatments with concrete riprap. Concrete riprap be considered subsidiary to the Item "Safety End Treatment".

(4) Adjust clear distance between pipes to provide for the minimum distance between safety end treatments.

REQUIREMENTS FOR CULVERT PIPES AND SAFETY PIPE RUNNERS

Pipe I.D.	Min Wall Thickness	Min O.D.	Min O.D. at Tapered End	Min Reinf Requirements (sq. in. / ft. of pipe)	Slope	Minimum Length of Unit	Single Pipe		Multiple Pipe	
							Skew	Pipe Runners Required	Skew	Pipe Runners Required
12"	2"	16"	16"	0.07 Circ.	3:1	2' – 0"	≤ 45°	No	≤ 45°	No
					4:1	2' – 8"				
					6:1	4' – 0"				
15"	2 ¼"	19 ½"	19"	0.07 Circ.	3:1	2' – 10"	≤ 45°	No	≤ 45°	No
					4:1	3' – 9"				
					6:1	5' – 8"				
18"	2 ½"	23"	21 ½"	0.07 Circ.	3:1	3' – 8"	≤ 45°	No	≤ 45°	No
					4:1	4' – 10"				
					6:1	7' – 3"				
24"	3"	30"	27"	0.07 Circ.	3:1	5' – 3"	≤ 45°	No	≤ 30°	No
					4:1	7' – 0"			> 30°	Yes
					6:1	10' – 6"				
30"	3 ½"	37"	31"	0.18 Circ.	3:1	6' – 3"	≤ 15°	No	≤ 15°	No
					4:1	8' – 2"	> 15°	Yes	> 15°	Yes
					6:1	12' – 1"				
36"	4"	44"	36"	0.19 Ellip.	3:1	7' – 10"	= 0°	No	≥ 0°	Yes
					4:1	10' – 4"	> 0°	Yes		
					6:1	15' – 4"				
42"	4 ½"	51"	41 ½"	0.23 Ellip.	3:1	9' – 6"	≥ 0°	Yes	≥ 0°	Yes
					4:1	12' – 6"				
					6:1	18' – 7"				

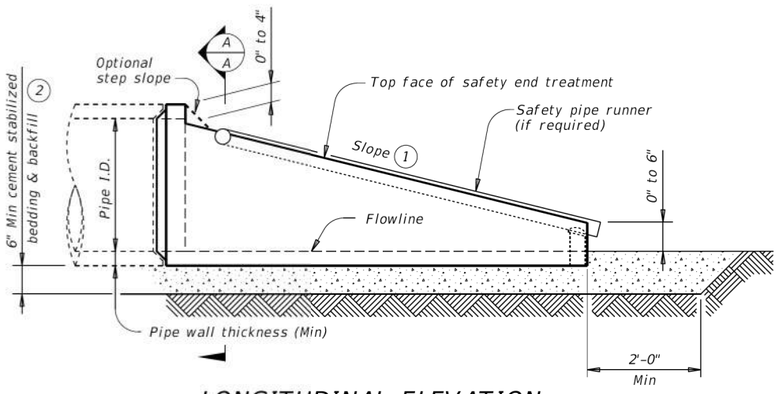

LONGITUDINAL ELEVATION

(Showing spigot end connection.)

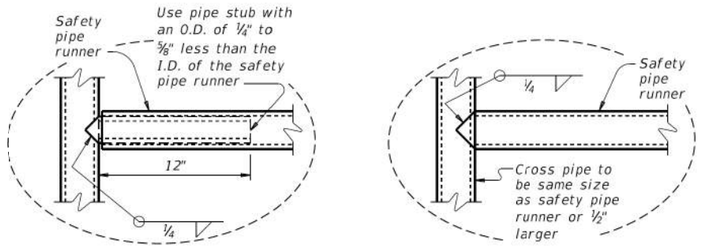

OPTION A

OPTION B

DETAIL A

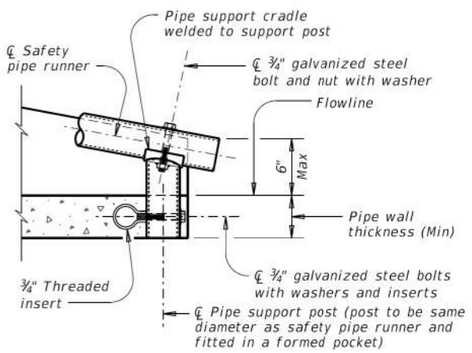

END DETAIL FOR INSTALLATION OF SAFETY PIPE RUNNERS

(If required)

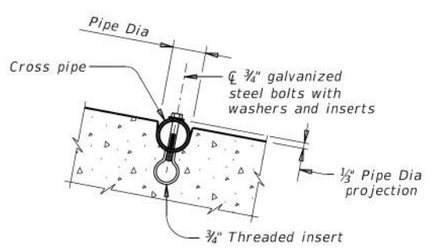

INSTALLATION DETAIL FOR SAFETY PIPE RUNNERS

(If required)

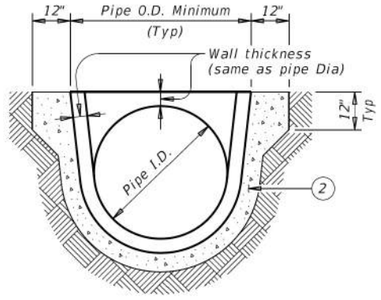

SECTION A-A

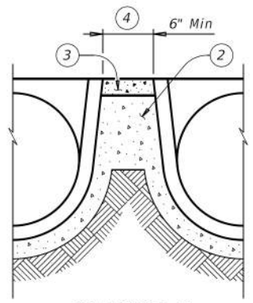

MULTIPLE PIPE INSTALLATION

MATERIAL NOTES:

Synthetic fibers listed on the "Fibers for Concrete" Material Producer List (MPL) may be used in lieu of steel reinforcing in riprap concrete unless noted otherwise.

Provide safety pipe runners, cross pipes, pipe support posts, and pipe stubs meeting the requirements of ASTM A53 (Type E or S, Gr B), ASTM A500 Gr B, or API 5LX52.

Galvanize all steel components except reinforcing steel after fabrication. Repair galvanizing damaged during transport or construction in accordance with the specifications.

GENERAL NOTES:

Precast safety end treatment for reinforced concrete pipe (CRP) may be used for TYPE II end treatment as specified in Item 467, "Safety End Treatment".

When precast safety end treatment is used as a Contractor's alternate to mitered RCP, riprap will not be required unless noted otherwise on the plans.

Manufacture precast concrete end sections in accordance with Item 464, "Reinforced Concrete Pipe" and in accordance with ASTM Specification C-76, Class III, Wall B for circular pipe.

Provide precast concrete end sections with a spigot or bell end for compatibility to upstream or downstream end conditions with sufficient annular space to allow for grout, mortar, cold applied asphalt joint compound or pre-formed plastic gasket material.

Methods of lifting shall be provided by the manufacturer for ease of loading, unloading, and installation.

Pipe runners are designed for a traversing load of 1,800 Lbs at yield as recommended by Research Report 280-1, "Safety Treatment of Roadside Cross-Drainage Structures", Texas Transportation Institute, March 1981.

Texas Department of Transportation

Bridge Division Standard

PRECAST SAFETY END TREATMENT

TYPE II ~ CROSS DRAINAGE

PSET-RC

FILE: psetrcss-20.dgn	DN: RLW	CK: KLR	DW: JTR	CK: GAF
©TxDOT February 2020	CONT	SECT	JOB	HIGHWAY
REVISIONS				
	DIST	COUNTY		SHEET NO.
				225



KEYPLAN

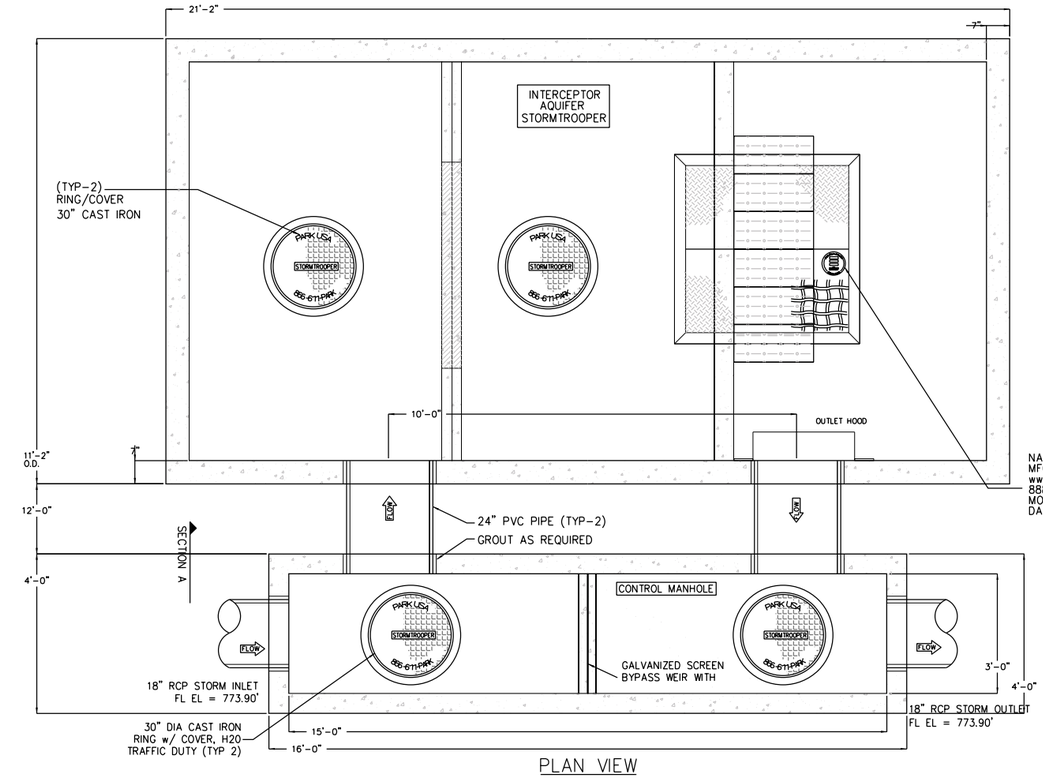

PLAN VIEW

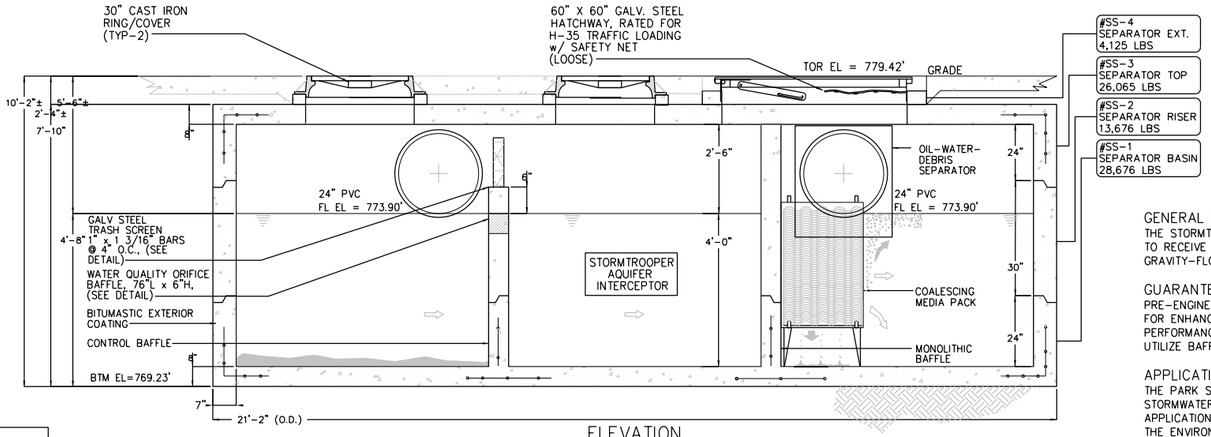

ELEVATION

ENGINEER CONFIRM ELEVATIONS PRIOR TO FABRICATION

MODEL NO.	FLOW RATE (gpm)	VAULT SURFACE AREA (sf)	NUMBER OF PLATE COLUMNS	NUMBER OF STACK FEET/ COLUMN	PROJECTED SURFACE AREA OF PLATES (Ft^2)	TOTAL SURFACE AREA OF SYSTEM (Ft^2)	MAXIMUM EFFECTIVE AREA FOR 80% REDUCTION
SWAQ-110	4000	200	6	3.0	713	913	1.23

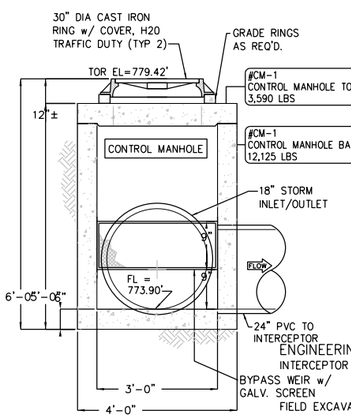

SECTION A

SPECIFICATIONS

CONCRETE: TYPE I/II CEMENT WITH DESIGN STRENGTH OF 4500 PSI AT 28 DAYS. UNIT IS OF MONOLITHIC CONSTRUCTION AT FLOOR & FIRST STAGE OF WALL WITH SECTIONAL RISER TO REQUIRED DEPTH.

REINFORCEMENT: GRADE 60 REINFORCED WITH STEEL REBAR CONFORMING TO ASTM A615 ON REQUIRED CENTERS OR EQUAL.

GRATING: ALL STEEL FABRICATION SHALL BE IN ACCORDANCE TO AWA D1.1. STEEL SHALL BE ASTM A36 CARBON STEEL, & HOT-DIPPED GALVANIZED AFTER FABRICATION IN ACCORDANCE TO ASTM A123

ACCESS: MANHOLE FRAMES, COVERS OR GRATES ARE MANUFACTURED OF GRAY CAST IRON CONFORMING TO ASTM A48-76 CLASS 30. MANHOLE SHALL HAVE 30 INCH INSIDE DIAMETER AND BE TRAFFIC DUTY.

HATCHWAY: GALVANIZED STEEL SKID-RESISTANT DOUBLE LEAF H-35 RATED.

ENGINEERING DATA

INTERCEPTOR IS STRUCTURALLY & HYDRAULICALLY ENGINEERED CONFORMING TO UNIFORM PLUMBING CODE. NOMINAL CAPACITY AS INDICATED.

FIELD EXCAVATION & PREPARATION SHALL BE COMPLETED PRIOR TO DELIVERY OF INTERCEPTOR. USE DIMENSIONAL DATA AS SHOWN.

NAMEPLATE INDICATING:
MFG: PARKUSA
www.ParkUSA.com
888-611-PARK
MODEL: SWAQ-110
DATE MANUFACTURED

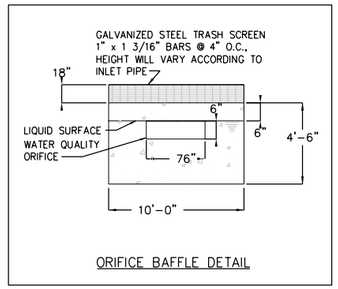

ORIFICE BAFFLE DETAIL

MARK:	STORMTROOPER WQ1
LINE:	A1
STA:	6+31.81
SHEET:	176, 168
DATE:	4/17/23

GENERAL INFORMATION

THE STORMTROOPER STORMWATER INTERCEPTOR IS DESIGNED TO RECEIVE & TREAT STORMWATER RUNOFF ON A GRAVITY-FLOW AND ONCE-THROUGH BASIS.

GUARANTEED PERFORMANCE

PRE-ENGINEERED COALESCING MEDIA PACKS ARE UTILIZED FOR ENHANCED SEPARATION WHICH PROVIDE SUPERIOR PERFORMANCE COMPARED TO OTHER SEPARATORS WHICH UTILIZE BAFFLES OR DIVERTERS.

APPLICATIONS

THE PARK STORM-TROOPER INTERCEPTOR IS DESIGNED FOR STORMWATER RUNOFF FROM COMMERCIAL & INDUSTRIAL APPLICATIONS WHERE EXCESSIVE POLLUTANTS MAY HARM THE ENVIRONMENT OR DAMAGE SEWER SYSTEMS.

MAINTENANCE

THE PARK STORM-TROOPER INTERCEPTOR REQUIRES MINIMAL MAINTENANCE. HYDROCARBONS AND SOLIDS ARE REMOVED FROM THE STORMWATER VIA BAFFLES AND COMPARTMENTS.

THESE POLLUTANTS ARE REMOVED FROM THE SEPARATOR WHEN SERVICED BY A LICENSED VACUUM TRUCK OPERATOR.

Storm® Trooper AQ
Stormwater Treatment System Patent No: 7,470,361

© ParkUSA. ALL RIGHTS RESERVED.

REV	DATE	BY	DESCRIPTION
A	5/17/23	MAS	ORIGINAL DRAWING

PROJECT: WYOMING SPRINGS SEGMENT 1
CUSTOMER: .
ENGINEER: HALFF ASSOCIATES
ORDER #: . PROJ #: 20-28444
DATE: 5/17/2023 LOCATION: ROUND ROCK, TX

PARK USA
A Northwest Pipe Company

STORMTROOPER
STORMWATER QUALITY INTERCEPTOR – UNIT WQ1

PM	PC	DRN	ENG	DWG. NO.	REV.
NW	.	MAS	NS	SWAQ-110-BYPASS	A
DATE 5/2023					

CREATED ON 7/20/2023 BY ----
LAST MODIFIED ON 7/20/2023 12:26 PM BY msolazar

PLOTTED ON 6/8/2023 3:45 PM BY Gupta, Shivani, I:\36000s\36179\002\Jordan - WYOMING SPRINGS SEGMENT 1-2028444\CAD\Detail\SWAQ-110-BYPASS--WYOMING SPRINGS SEGMENT 1.dwg
By: StormTrooper Details

WYOMING SPRINGS
SEGMENT 1
ROUND ROCK, TX

ROUND ROCK TEXAS

halff
13620 BRAKMICK DR
BLDG C, STE 100
AUSTIN, TX 78728
(512) 777-4600
TBPELS FIRM #312

No.	Date	Revision	Description

F-312 8/14/23
STATE OF TEXAS
JEFFREY L NAGY
133255
LICENSED PROFESSIONAL ENGINEER

100% SUBMITTAL

Project No.:	36179.002
Issued:	8/24/2023
Drawn By:	SG
Checked By:	JN
Scale:	N.T.S

Sheet Title
WATER QUALITY DETAILS (1 OF 12)

226
Sheet Number



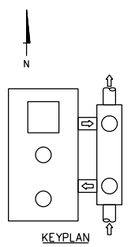

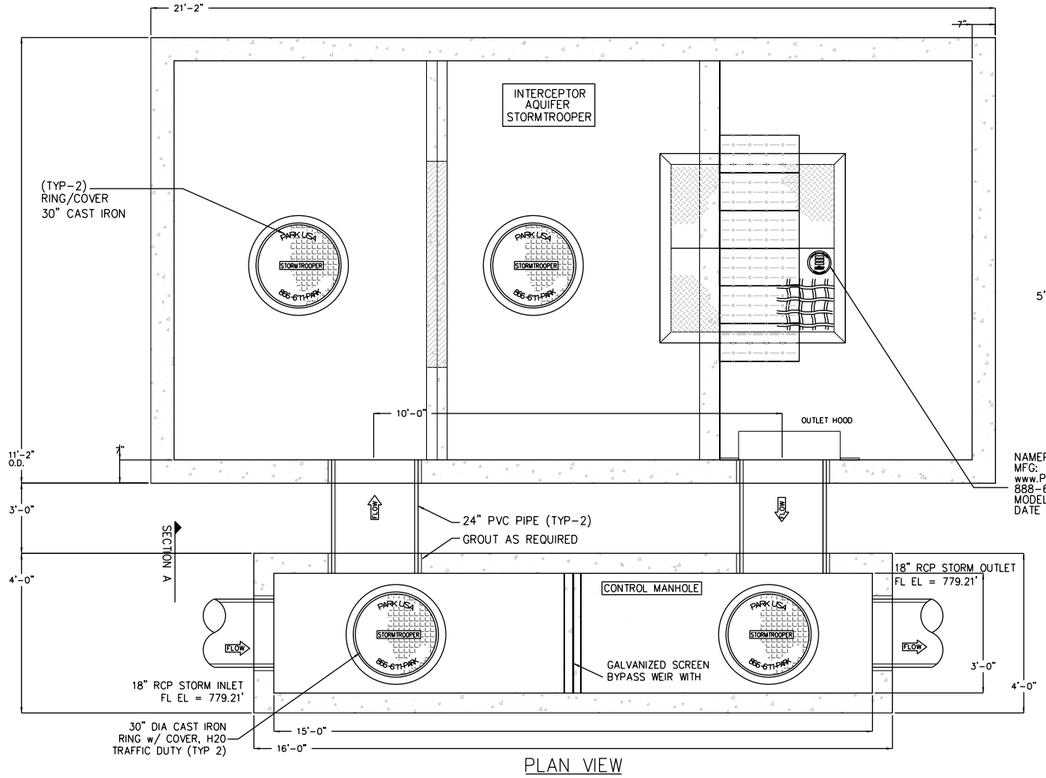

PLAN VIEW

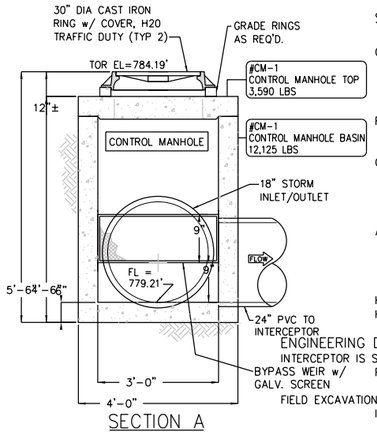

SECTION A

NAMEPLATE INDICATING:
MFG: PARKUSA
www.ParkUSA.com
888-611-PARK
MODEL: SWAQ-110
DATE MANUFACTURED

SPECIFICATIONS

CONCRETE: TYPE I/II CEMENT WITH DESIGN STRENGTH OF 4500 PSI AT 28 DAYS. UNIT IS OF MONOLITHIC CONSTRUCTION AT FLOOR & FIRST STAGE OF WALL WITH SECTIONAL RISER TO REQUIRED DEPTH.

REINFORCEMENT: GRADE 60 REINFORCED WITH STEEL REBAR CONFORMING TO ASTM A615 ON REQUIRED CENTERS OR EQUAL.

GRATING: ALL STEEL FABRICATION SHALL BE IN ACCORDANCE TO AWA D1.1. STEEL SHALL BE ASTM A36 CARBON STEEL, & HOT-DIPPED GALVANIZED AFTER FABRICATION IN ACCORDANCE TO ASTM A123

ACCESS: MANHOLE FRAMES, COVERS OR GRATES ARE MANUFACTURED OF GRAY CAST IRON CONFORMING TO ASTM A48-76 CLASS 30. MANHOLE SHALL HAVE 30 INCH INSIDE DIAMETER AND BE TRAFFIC DUTY.

HATCHWAY: H-35 RATED. GALVANIZED STEEL SKID-RESISTANT DOUBLE LEAF

ENGINEERING DATA

INTERCEPTOR IS STRUCTURALLY & HYDRAULICALLY ENGINEERED CONFORMING TO UNIFORM PLUMBING CODE. NOMINAL CAPACITY AS INDICATED.

FIELD EXCAVATION & PREPARATION SHALL BE COMPLETED PRIOR TO DELIVERY OF INTERCEPTOR. USE DIMENSIONAL DATA AS SHOWN.



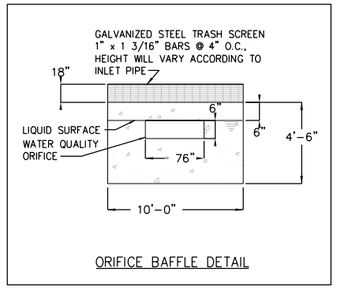

ORIFICE BAFFLE DETAIL

MARK:	STORMTROOPER WQ2
LINE:	A
STA:	5+98.68
SHEET:	168
DATE:	4/17/23

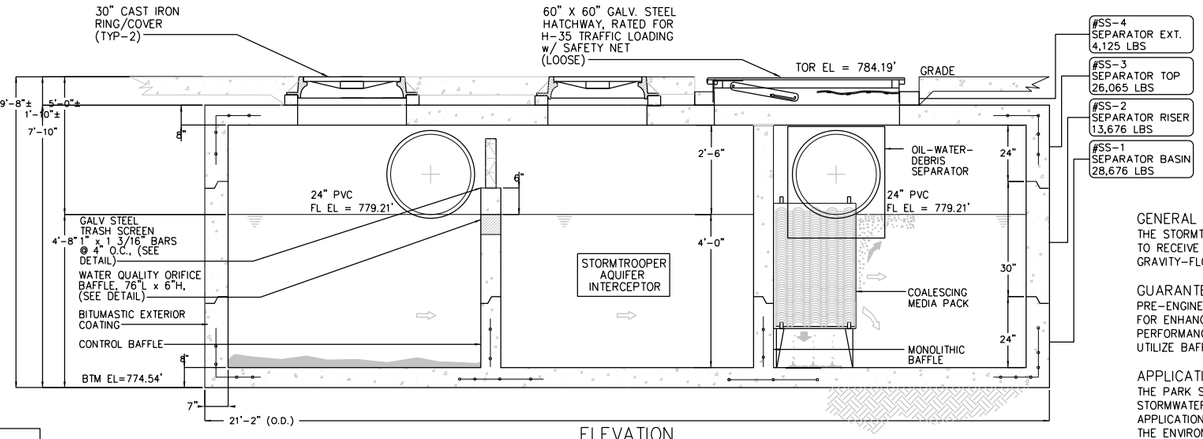

ELEVATION

MODEL NO.	FLOW RATE (gpm)	VAULT SURFACE AREA (sf)	NUMBER OF PLATE COLUMNS	NUMBER OF STACK FEET/ COLUMN	PROJECTED SURFACE AREA OF PLATES (Ft^2)	TOTAL SURFACE AREA OF SYSTEM (Ft^2)	MAXIMUM EFFECTIVE AREA FOR 80% REDUCTION
SWAQ-110	4000	200	6	3.0	713	913	1.23

ENGINEER CONFIRM ELEVATIONS PRIOR TO FABRICATION

GENERAL INFORMATION

THE STORMTROOPER STORMWATER INTERCEPTOR IS DESIGNED TO RECEIVE & TREAT STORMWATER RUNOFF ON A GRAVITY-FLOW AND ONCE-THROUGH BASIS.

GUARANTEED PERFORMANCE

PRE-ENGINEERED COALESCING MEDIA PACKS ARE UTILIZED FOR ENHANCED SEPARATION WHICH PROVIDE SUPERIOR PERFORMANCE COMPARED TO OTHER SEPARATORS WHICH UTILIZE BAFFLES OR DIVERTERS.

APPLICATIONS

THE PARK STORM-TROOPER INTERCEPTOR IS DESIGNED FOR STORMWATER RUNOFF FROM COMMERCIAL & INDUSTRIAL APPLICATIONS WHERE EXCESSIVE POLLUTANTS MAY HARM THE ENVIRONMENT OR DAMAGE SEWER SYSTEMS.

MAINTENANCE

THE PARK STORM-TROOPER INTERCEPTOR REQUIRES MINIMAL MAINTENANCE. HYDROCARBONS AND SOLIDS ARE REMOVED FROM THE STORMWATER VIA BAFFLES AND COMPARTMENTS.

THESE POLLUTANTS ARE REMOVED FROM THE SEPARATOR WHEN SERVICED BY A LICENSED VACUUM TRUCK OPERATOR.

Storm Trooper AQ
Stormwater Treatment System Patent No: 7,470,361

© ParkUSA. ALL RIGHTS RESERVED.

REV	DATE	BY	DESCRIPTION
A	5/17/23	MAS	ORIGINAL DRAWING

PROJECT: WYOMING SPRINGS SEGMENT 1
CUSTOMER: .
ENGINEER: HALFF ASSOCIATES
ORDER #: . PROJ #: 20-28444
DATE: 5/17/2023 LOCATION: ROUND ROCK, TX

PARK USA
A Northwest Pipe Company

STORMTROOPER
STORMWATER QUALITY INTERCEPTOR – UNIT WQ2

PM	PC	DRN	ENG
NW	.	MAS	NS

DWG. NO. SWAQ-110-BYPASS
REV. A
DATE 5/2023

WYOMING SPRINGS
SEGMENT 1
ROUND ROCK, TX

ROUND ROCK TEXAS

halff
13620 BRAKMICK DR
BLDG C, STE 100
AUSTIN, TX 78728
(512) 777-4600
TBPELS FIRM #312

No.	Date	Revision Description

F-312 8/14/23
STATE OF TEXAS
JEFFREY L NAGY
133255
LICENSED PROFESSIONAL ENGINEER

100% SUBMITTAL

Project No.:	36179.002
Issued:	8/24/2023
Drawn By:	SG
Checked By:	JN
Scale:	N.T.S

Sheet Title
WATER QUALITY DETAILS (2 OF 12)

227
Sheet Number

PLOTTED ON 6/8/2023 3:45 PM BY Gopilo, Shivani, L:\36000\36179\002\Design\Drawings\Sheets - WYOMING SPRINGS SEGMENT 1 - 20284444\ex StormTrooper Details\SWAQ-110-BYPASS--WYOMING SPRINGS SEGMENT 1 - 20284444.dwg

CREATED ON 7/20/2023 BY -----
LAST MODIFIED ON 7/20/2023 12:20 PM BY msalazar



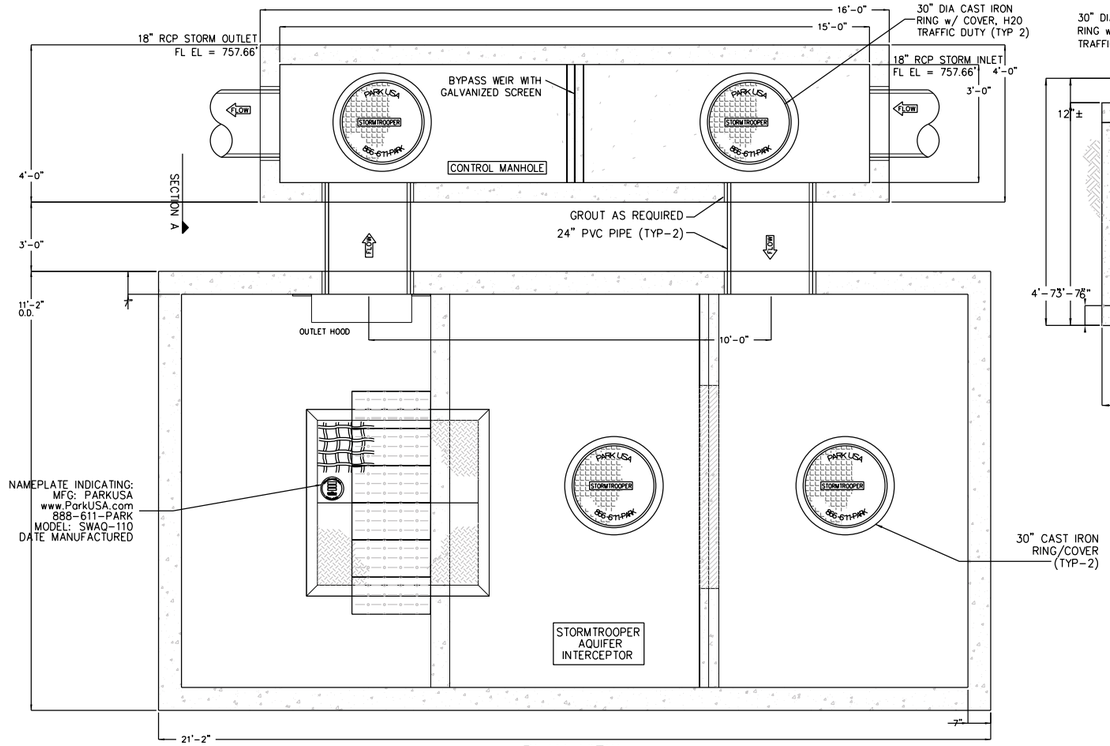

PLAN VIEW

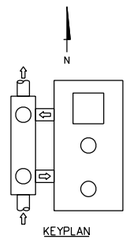

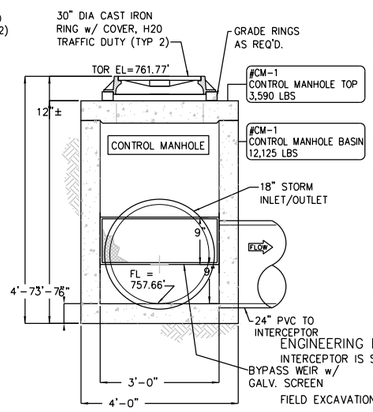

SECTION A

SPECIFICATIONS

CONCRETE: TYPE I/II CEMENT WITH DESIGN STRENGTH OF 4500 PSI AT 28 DAYS. UNIT IS OF MONOLITHIC CONSTRUCTION AT FLOOR & FIRST STAGE OF WALL WITH SECTIONAL RISER TO REQUIRED DEPTH.

REINFORCEMENT: GRADE 60 REINFORCED WITH STEEL REBAR CONFORMING TO ASTM A615 ON REQUIRED CENTERS OR EQUAL.

GRATING: ALL STEEL FABRICATION SHALL BE IN ACCORDANCE TO AWA D1.1. STEEL SHALL BE ASTM A36 CARBON STEEL, & HOT-DIPPED GALVANIZED AFTER FABRICATION IN ACCORDANCE TO ASTM A123

ACCESS: MANHOLE FRAMES, COVERS OR GRATES ARE MANUFACTURED OF GRAY CAST IRON CONFORMING TO ASTM A48-76 CLASS 30. MANHOLE SHALL HAVE 30 INCH INSIDE DIAMETER AND BE TRAFFIC DUTY.

HATCHWAY: GALVANIZED STEEL SKID-RESISTANT DOUBLE LEAF H-35 RATED.

ENGINEERING DATA

INTERCEPTOR IS STRUCTURALLY & HYDRAULICALLY ENGINEERED CONFORMING TO UNIFORM PLUMBING CODE. NOMINAL CAPACITY AS INDICATED.

FIELD EXCAVATION & PREPARATION SHALL BE COMPLETED PRIOR TO DELIVERY OF INTERCEPTOR. USE DIMENSIONAL DATA AS SHOWN.

NPCA CERTIFIED PLANT

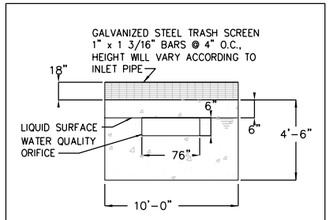

ORIFICE BAFFLE DETAIL

MARK:	STORMTROOPER WQ3
LINE:	A2
STA:	3+43.29
SHEET:	177, 169
DATE:	4/17/23

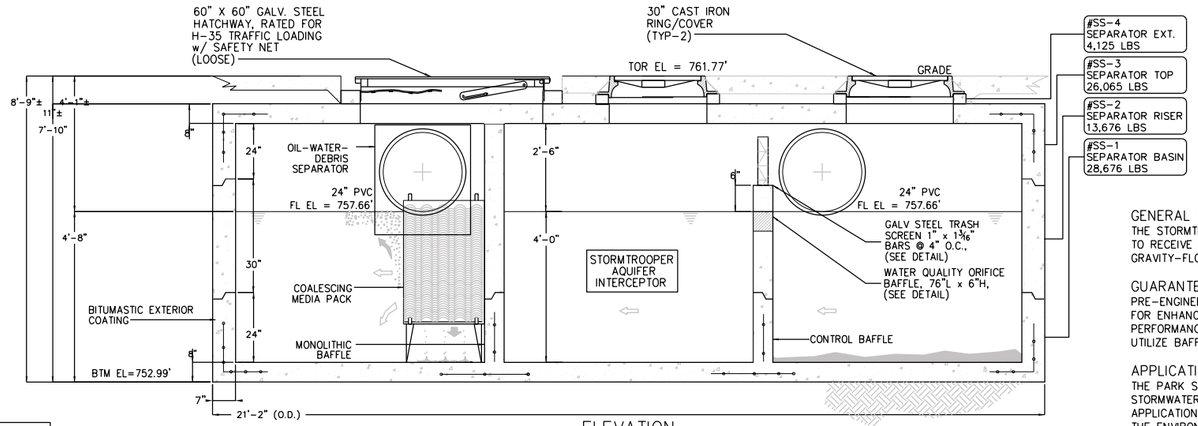

ELEVATION

MODEL NO.	FLOW RATE (gpm)	VAULT SURFACE AREA (sf)	NUMBER OF PLATE COLUMNS	NUMBER OF STACK FEET/ COLUMN	PROJECTED SURFACE AREA OF PLATES (Ft^2)	TOTAL SURFACE AREA OF SYSTEM (Ft^2)	MAXIMUM EFFECTIVE AREA FOR 80% REDUCTION
SWAQ-110	4000	200	6	3.0	713	913	1.23

ENGINEER CONFIRM ELEVATIONS PRIOR TO FABRICATION

GENERAL INFORMATION

THE STORMTROOPER STORMWATER INTERCEPTOR IS DESIGNED TO RECEIVE & TREAT STORMWATER RUNOFF ON A GRAVITY-FLOW AND ONCE-THROUGH BASIS.

GUARANTEED PERFORMANCE

PRE-ENGINEERED COALESCING MEDIA PACKS ARE UTILIZED FOR ENHANCED SEPARATION WHICH PROVIDE SUPERIOR PERFORMANCE COMPARED TO OTHER SEPARATORS WHICH UTILIZE BAFFLES OR DIVERTERS.

APPLICATIONS

THE PARK STORM-TROOPER INTERCEPTOR IS DESIGNED FOR STORMWATER RUNOFF FROM COMMERCIAL & INDUSTRIAL APPLICATIONS WHERE EXCESSIVE POLLUTANTS MAY HARM THE ENVIRONMENT OR DAMAGE SEWER SYSTEMS.

MAINTENANCE

THE PARK STORM-TROOPER INTERCEPTOR REQUIRES MINIMAL MAINTENANCE. HYDROCARBONS AND SOLIDS ARE REMOVED FROM THE STORMWATER VIA BAFFLES AND COMPARTMENTS.

THESE POLLUTANTS ARE REMOVED FROM THE SEPARATOR WHEN SERVICED BY A LICENSED VACUUM TRUCK OPERATOR.

Storm Trooper AQ
Stormwater Treatment System Patent No: 7,470,361

© ParkUSA. ALL RIGHTS RESERVED.

REV	DATE	BY	DESCRIPTION
A	5/17/23	MAS	ORIGINAL DRAWING

PROJECT: WYOMING SPRINGS SEGMENT 1
CUSTOMER: .
ENGINEER: HALFF ASSOCIATES
ORDER #: . PROJ #: 20-28444
DATE: 5/17/2023 LOCATION: ROUND ROCK, TX

PARK USA
A Northwest Pipe Company

STORMTROOPER
STORMWATER QUALITY INTERCEPTOR – UNIT WQ3

PM	PC	DRN	ENG	DWG. NO.	REV.
NW	.	MAS	NS	SWAQ-110-BYPASS	A
DATE 5/2023					

PLOTTED ON 6/8/2023 3:45 PM BY: Gupta, Shoni, I:\MOD0s\196781\002\Design Phase\Drawings\WYOMING SPRINGS SEGMENT 1-20284444 Plan Set\Storm Trooper Details\WQ-110-BYPASS-- WYOMING SPRINGS SEGMENT 1.dwg

WYOMING SPRINGS
SEGMENT 1
ROUND ROCK, TX

ROUND ROCK TEXAS

halff
13620 BRAKMICK DR
BLDG C, STE 100
AUSTIN, TX 78728
(512) 777-4600
TBPELS FIRM #312

No.	Date	Revision Description

F-312 8/14/23
STATE OF TEXAS
JEFFREY L NAGY
133255
LICENSED PROFESSIONAL ENGINEER

100% SUBMITTAL

Project No.:	36179.002
Issued:	8/24/2023
Drawn By:	SG
Checked By:	JN
Scale:	N.T.S

Sheet Title
WATER QUALITY DETAILS (3 OF 12)

228
Sheet Number

CREATED ON 7/20/2023 BY ----
LAST MODIFIED ON 7/20/2023 12:20 PM BY msalazar

Date: 8/24/2023 4:13:05 PM
User: msalazar
Dwg: I:\MOD0s\196781\002\CAD\Reference\Civil\SHEETS\SWQ-110-BYPASS.dgn
HALFF

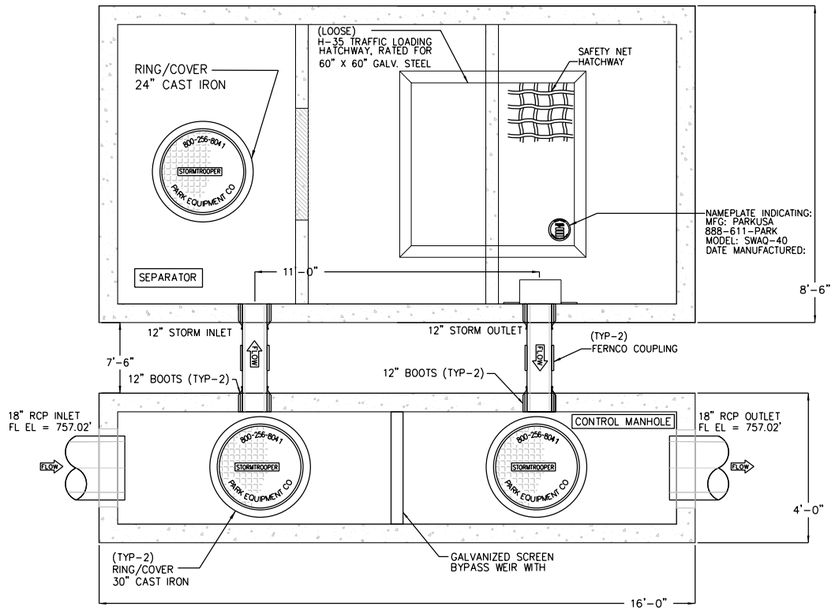

PLAN VIEW

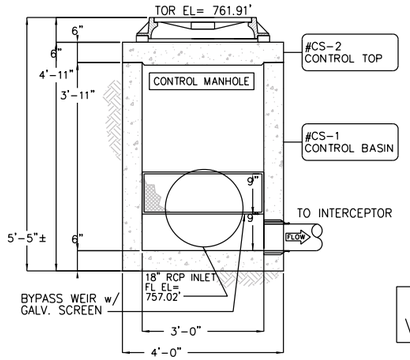

SECTION A

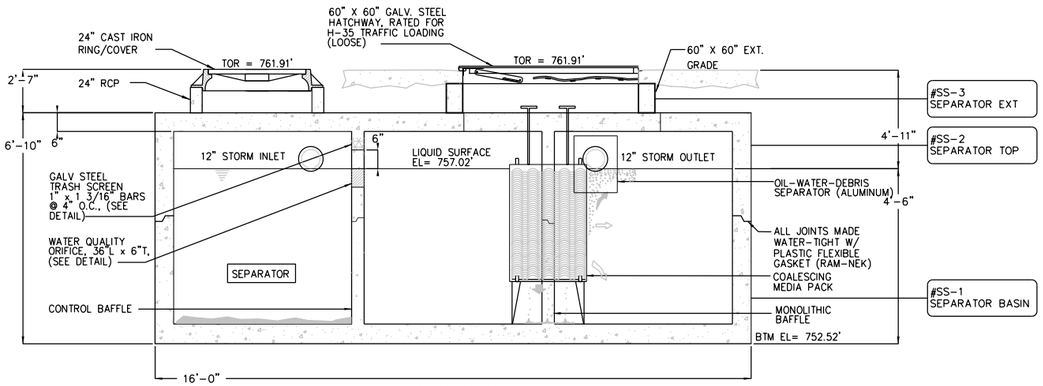

ELEVATION

MODEL NO.	FLOW RATE (gpm)	VAULT SURFACE AREA (sf)	NUMBER OF PLATE COLUMNS	NUMBER OF STACK FEET/ COLUMN	PROJECTED SURFACE AREA OF PLATES (Ft^2)	TOTAL SURFACE AREA OF SYSTEM (Ft^2)	MAXIMUM EFFECTIVE AREA FOR 80% REDUCTION
SWAQ-40	2250	113	4	3.0	475	588	0.79

CONTRACTOR TO VERIFY PIPE ANGLE

CONTRACTOR/ENGINEER TO VERIFY ELEVATIONS BEFORE PRODUCTION

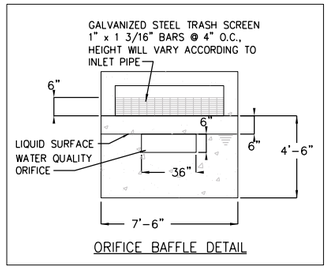

ORIFICE BAFFLE DETAIL

GENERAL INFORMATION

THE STORMTROOPER® AQ STORMWATER INTERCEPTOR IS DESIGNED TO RECEIVE & TREAT STORMWATER RUNOFF ON A GRAVITY-FLOW & ONCE-THROUGH BASIS.

GUARANTEED PERFORMANCE

PRE-ENGINEERED COALESCING MEDIA PACKS ARE UTILIZED FOR ENHANCED SEPARATION WHICH PROVIDE SUPERIOR PERFORMANCE COMPARED TO OTHER SEPARATORS WHICH UTILIZE BAFFLES OR DIVERTERS.

APPLICATIONS

THE PARK STORMTROOPER INTERCEPTOR IS DESIGNED FOR STORMWATER RUNOFF FROM COMMERCIAL & INDUSTRIAL APPLICATIONS WHERE EXCESSIVE POLLUTANTS MAY HARM THE ENVIRONMENT OR DAMAGE SEWER SYSTEMS.

BY-PASS DESIGN

A BY-PASS MANHOLE DIVERTS STORMWATER DURING HEAVY PEAK STORM PERIODS. THIS ALLOWS FOR OPTIMAL INTERCEPTOR SIZING.

MAINTENANCE

THE PARK STORMTROOPER INTERCEPTOR REQUIRES MINIMAL MAINTENANCE. HYDROCARBONS & SOLIDS ARE REMOVED FROM THE STORMWATER VIA BAFFLES & COMPARTMENTS.

THESE POLLUTANTS ARE REMOVED FROM THE SEPARATOR WHEN SERVICED BY A LICENSED VACUUM TRUCK OPERATOR.

STORMTROOPER® AQ
EDWARDS AQUIFER DESIGN
SERIAL #: XXXXX
MODEL #: SWAQ-110
ORDER #: XXXXX
DATE MFG: 5/23
MFG BY: PARK USA, A Northwest Pipe Company
Pat#: 7,470,361
STORMWATER INTERCEPTOR

SPECIFICATIONS

CONCRETE: TYPE I/II CEMENT WITH DESIGN STRENGTH OF 4500 PSI AT 28 DAYS. UNIT IS OF MONOLITHIC CONSTRUCTION AT FLOOR & FIRST STAGE OF WALL WITH SECTIONAL RISER TO REQUIRED DEPTH.

REINFORCEMENT: GRADE 60 REINFORCED WITH STEEL REBAR CONFORMING TO ASTM A615 ON REQUIRED CENTERS OR EQUAL.

GRATING: ALL STEEL FABRICATION SHALL BE IN ACCORDANCE TO AWA D1.1. STEEL SHALL BE ASTM A36 CARBON STEEL, & HOT-DIPPED GALVANIZED AFTER FABRICATION IN ACCORDANCE TO ASTM A123

ACCESS: MANHOLE FRAMES, COVERS OR GRATES ARE MANUFACTURED OF GRAY CAST IRON CONFORMING TO ASTM A48-76 CLASS 30. MANHOLE SHALL HAVE 30 INCH INSIDE DIAMETER AND BE TRAFFIC DUTY.

HATCHWAY: H-35 RATED. GALVANIZED STEEL SKID-RESISTANT DOUBLE LEAF

ENGINEERING DATA

INTERCEPTOR IS STRUCTURALLY & HYDRAULICALLY ENGINEERED CONFORMING TO UNIFORM PLUMBING CODE. NOMINAL CAPACITY AS INDICATED.

FIELD EXCAVATION & PREPARATION SHALL BE COMPLETED PRIOR TO DELIVERY OF INTERCEPTOR. USE DIMENSIONAL DATA AS SHOWN.

NPCA CERTIFIED PLANT · ASPE American Society of Plumbing Engineers · ASTM

MARK:	STORMTROOPER WQ4
LINE:	A3
STA:	1+43.50
SHEET:	177, 169
DATE:	4/17/23

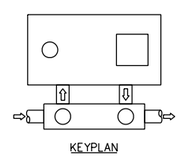

KEYPLAN

© ParkUSA. ALL RIGHTS RESERVED.

REV	DATE	BY	DESCRIPTION
A	5/17/23	MAS	ORIGINAL DRAWING

PROJECT: WYOMING SPRINGS SEGMENT 1
CUSTOMER: .
ENGINEER: HALFF ASSOCIATES
ORDER #: . PROJ #: 20-28444
DATE: 5/17/2023 LOCATION: ROUND ROCK, TX

PARK USA
A Northwest Pipe Company

STORMTROOPER
STORMWATER QUALITY INTERCEPTOR - UNIT

PM	PC	DRN	ENG
NW	.	MAS	NS

DWG. NO. SWAQ-40-BYPASS
REV. A
DATE 5/2023

WYOMING SPRINGS
SEGMENT 1
ROUND ROCK, TX

ROUND ROCK TEXAS

halff
13620 BRAKMICK DR
BLDG C, STE 100
AUSTIN, TX 78728
(512) 777-4600
TBPELS FIRM #312

Revision No.	Date	Description

F-312 STATE OF TEXAS JEFFREY L. NAGY 133255 LICENSED PROFESSIONAL ENGINEER 8/14/23

100% SUBMITTAL

Project No.:	36179.002
Issued:	8/24/2023
Drawn By:	SG
Checked By:	JN
Scale:	N.T.S

Sheet Title
WATER QUALITY DETAILS (4 OF 12)

229
Sheet Number

CREATED ON 7/20/2023 BY ----
LAST MODIFIED ON 7/20/2023 12:26 PM BY mgaspar
PLOTTED ON 6/8/2023 3:44 PM BY Gatis, Shonta, L:\36000s\36179\002\Dataen e\ StormTrooper Details\SWAQ-110-BYPASS--WYOMING SPRINGS SEGMENT 1 - 20230644

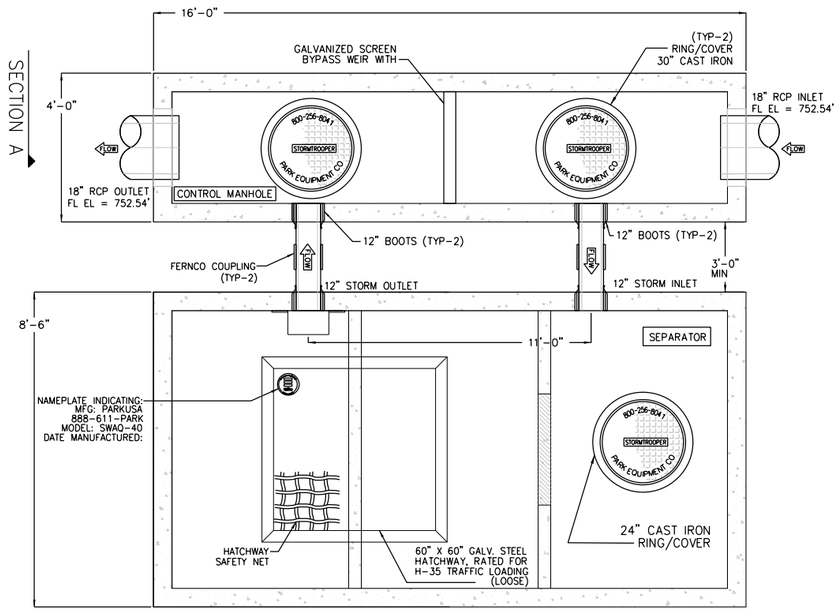

PLAN VIEW

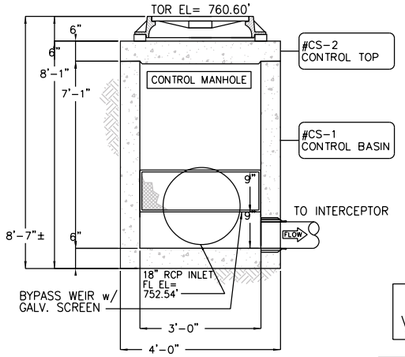

SECTION A

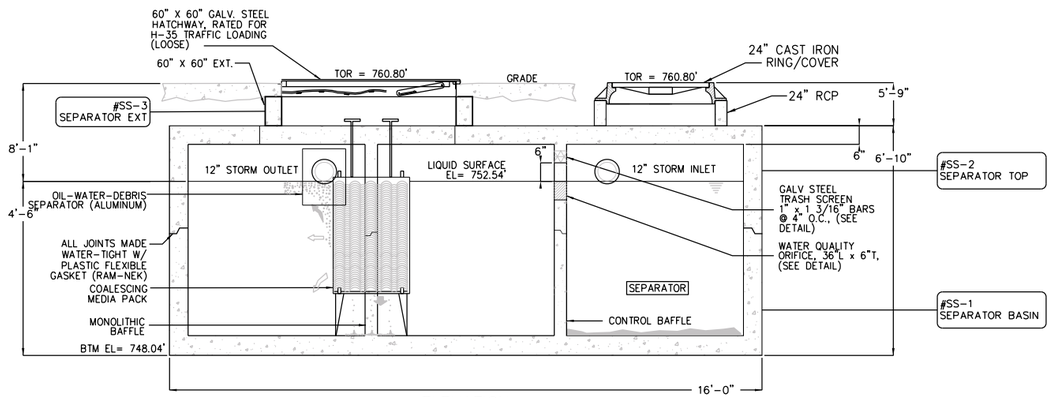

ELEVATION

MODEL NO.	FLOW RATE (gpm)	VAULT SURFACE AREA (sf)	NUMBER OF PLATE COLUMNS	NUMBER OF STACK FEET/ COLUMN	PROJECTED SURFACE AREA OF PLATES (Ft^2)	TOTAL SURFACE AREA OF SYSTEM (Ft^2)	MAXIMUM EFFECTIVE AREA FOR 80% REDUCTION
SWAQ-40	2250	113	4	3.0	475	588	0.79



SPECIFICATIONS

CONCRETE: TYPE I/II CEMENT WITH DESIGN STRENGTH OF 4500 PSI AT 28 DAYS. UNIT IS OF MONOLITHIC CONSTRUCTION AT FLOOR & FIRST STAGE OF WALL WITH SECTIONAL RISER TO REQUIRED DEPTH.

REINFORCEMENT: GRADE 60 REINFORCED WITH STEEL REBAR CONFORMING TO ASTM A615 ON REQUIRED CENTERS OR EQUAL.

GRATING: ALL STEEL FABRICATION SHALL BE IN ACCORDANCE TO AWA D1.1. STEEL SHALL BE ASTM A36 CARBON STEEL, & HOT-DIPPED GALVANIZED AFTER FABRICATION IN ACCORDANCE TO ASTM A123

ACCESS: MANHOLE FRAMES, COVERS OR GRATES ARE MANUFACTURED OF GRAY CAST IRON CONFORMING TO ASTM A48-76 CLASS 30. MANHOLE SHALL HAVE 30 INCH INSIDE DIAMETER AND BE TRAFFIC DUTY.

HATCHWAY: H-35 RATED. GALVANIZED STEEL SKID-RESISTANT DOUBLE LEAF

ENGINEERING DATA

INTERCEPTOR IS STRUCTURALLY & HYDRAULICALLY ENGINEERED CONFORMING TO UNIFORM PLUMBING CODE. NOMINAL CAPACITY AS INDICATED.

FIELD EXCAVATION & PREPARATION SHALL BE COMPLETED PRIOR TO DELIVERY OF INTERCEPTOR. USE DIMENSIONAL DATA AS SHOWN.

NPCA CERTIFIED PLANT · ASPE A Member Society of Plumbing Engineers · ASTM

CONTRACTOR TO VERIFY PIPE ANGLE

CONTRACTOR/ENGINEER TO VERIFY ELEVATIONS BEFORE PRODUCTION

MARK:	STORMTROOPER WQ5
LINE:	B1
STA:	1+38.19
SHEET:	177, 170
DATE:	4/17/23

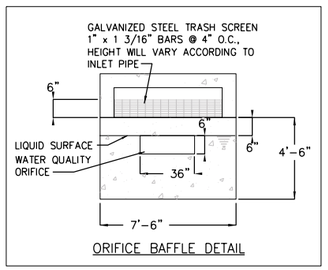

ORIFICE BAFFLE DETAIL

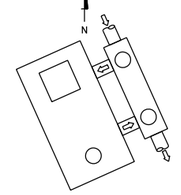

KEYPLAN

GENERAL INFORMATION

THE STORMTROOPER® AQ STORMWATER INTERCEPTOR IS DESIGNED TO RECEIVE & TREAT STORMWATER RUNOFF ON A GRAVITY-FLOW & ONCE-THROUGH BASIS.

GUARANTEED PERFORMANCE

PRE-ENGINEERED COALESCING MEDIA PACKS ARE UTILIZED FOR ENHANCED SEPARATION WHICH PROVIDE SUPERIOR PERFORMANCE COMPARED TO OTHER SEPARATORS WHICH UTILIZE BAFFLES OR DIVERTERS.

APPLICATIONS

THE PARK STORMTROOPER INTERCEPTOR IS DESIGNED FOR STORMWATER RUNOFF FROM COMMERCIAL & INDUSTRIAL APPLICATIONS WHERE EXCESSIVE POLLUTANTS MAY HARM THE ENVIRONMENT OR DAMAGE SEWER SYSTEMS.

BY-PASS DESIGN

A BY-PASS MANHOLE DIVERTS STORMWATER DURING HEAVY PEAK STORM PERIODS. THIS ALLOWS FOR OPTIMAL INTERCEPTOR SIZING.

MAINTENANCE

THE PARK STORMTROOPER INTERCEPTOR REQUIRES MINIMAL MAINTENANCE. HYDROCARBONS & SOLIDS ARE REMOVED FROM THE STORMWATER VIA BAFFLES & COMPARTMENTS.

THESE POLLUTANTS ARE REMOVED FROM THE SEPARATOR WHEN SERVICED BY A LICENSED VACUUM TRUCK OPERATOR.

© ParkUSA. ALL RIGHTS RESERVED.

REV	DATE	BY	DESCRIPTION
A	5/17/23	MAS	ORIGINAL DRAWING
PROJECT:	WYOMING SPRINGS SEGMENT 1		
CUSTOMER:	.		
ENGINEER:	HALFF ASSOCIATES		
ORDER #:	.	PROJ #:	20-28444
DATE:	5/17/2023	LOCATION:	ROUND ROCK, TX

PARK USA A Northwest Pipe Company

STORMTROOPER
STORMWATER QUALITY INTERCEPTOR – UNIT WQ5

PM	PC	DRN	ENG
NW	.	MAS	NS

DATE 5/2023

DWG. NO. SWAQ-40-BYPASS

REV. A

PLOTTED ON 6/8/2023 3:43 PM BY Caitlin Shiomi: L:\ARCOS_36179.001\Civil\Drawings\Sheets\WQ - UNIT\SWAQ-110-BYPASS.dwg
■ ■ StormTrooper Models ■ SWAQ-110-BYPASS - Wyoming Springs SEGMENT 1 - 20-28444

WYOMING SPRINGS
SEGMENT 1
ROUND ROCK, TX

ROUND ROCK TEXAS

halff
13620 RR 620 N
BLDG C, STE 100
AUSTIN, TX 78750
(512) 777-4600
TBPELS FIRM #312

Revision No.	Date	Description

F-312 6/14/23
STATE OF TEXAS
JEFFREY L. NAGY
133255
LICENSED PROFESSIONAL ENGINEER

100% SUBMITTAL

Project No.:	36179.002
Issued:	6/24/2023
Drawn By:	SG
Checked By:	JN
Scale:	N.T.S

Sheet Title
WATER QUALITY DETAILS (5 OF 12)

230
Sheet Number

CREATED ON 7/20/2023 BY ---
LAST MODIFIED ON 7/20/2023 12:20 PM BY mnastor

Dwg: N:\Civil_WYOMING SPRINGS SEGMENT 1\CADD\Refernce\ARCHIVE\STRUCTURES\WQ UNIT\SWAQ-110-BYPASS.dgn
User: mnastor
Date: 6/24/2023 4:13:33 PM
Style: HALFF
Plot: pltWH
Xref: XR_WQ_UNIT_MODEL.dgn
Image: A1_WQ_UNIT_MODEL.tif

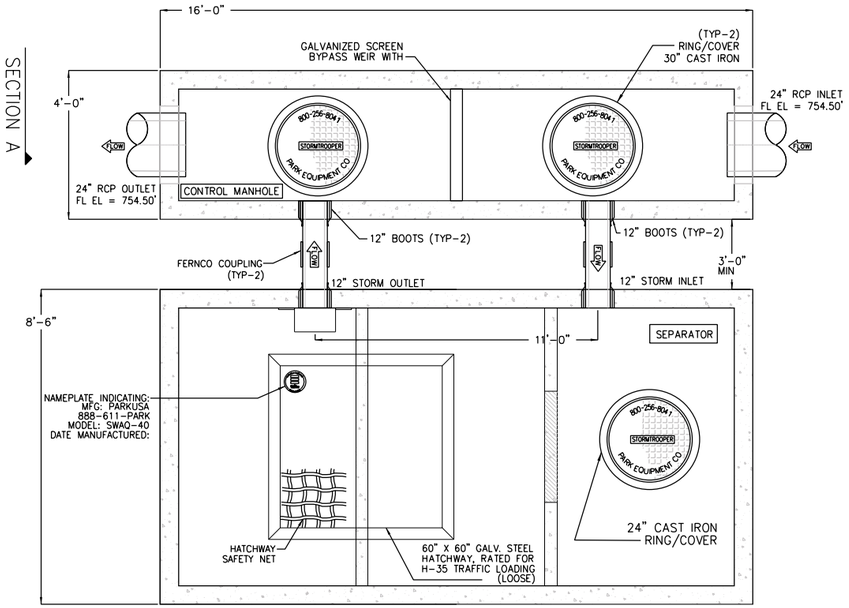

PLAN VIEW

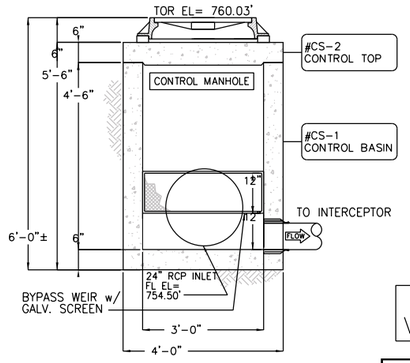

SECTION A

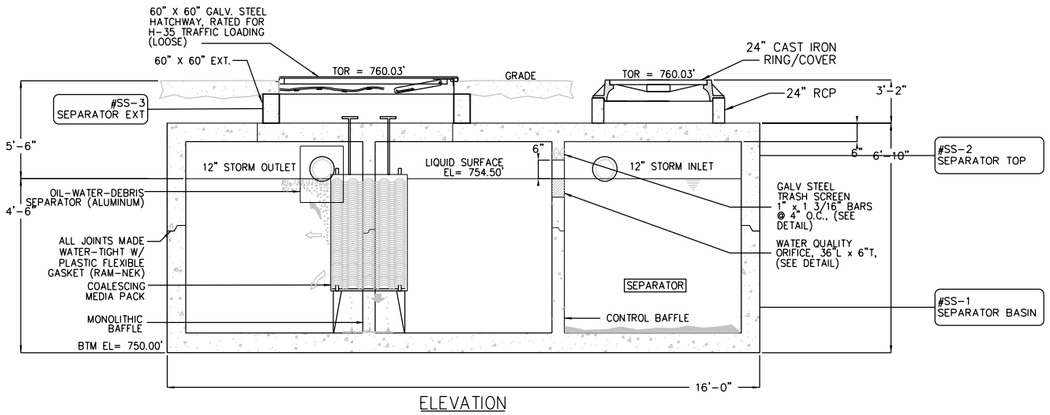

ELEVATION

MODEL NO.	FLOW RATE (gpm)	VAULT SURFACE AREA (sf)	NUMBER OF PLATE COLUMNS	NUMBER OF STACK FEET/ COLUMN	PROJECTED SURFACE AREA OF PLATES (Ft^2)	TOTAL SURFACE AREA OF SYSTEM (Ft^2)	MAXIMUM EFFECTIVE AREA FOR 80% REDUCTION
SWAQ-40	2250	113	4	3.0	475	588	0.79

CREATED ON 7/20/2023 BY: ----
LAST MODIFIED ON 7/20/2023 12:20 PM BY mvalcar

STORMTROOPER® AQ EDWARDS AQUIFER DESIGN
SERIAL # XXXXX
MODEL # SWAQ-110
ORDER # XXXXX
DATE MFG 5/23
MFG BY PARK A Northwest Pipe Company
Pat.# 7,470,361
STORMWATER INTERCEPTOR

SPECIFICATIONS

CONCRETE: TYPE I/II CEMENT WITH DESIGN STRENGTH OF 4500 PSI AT 28 DAYS. UNIT IS OF MONOLITHIC CONSTRUCTION AT FLOOR & FIRST STAGE OF WALL WITH SECTIONAL RISER TO REQUIRED DEPTH.

REINFORCEMENT: GRADE 60 REINFORCED WITH STEEL REBAR CONFORMING TO ASTM A615 ON REQUIRED CENTERS OR EQUAL.

GRATING: ALL STEEL FABRICATION SHALL BE IN ACCORDANCE TO AWA D1.1. STEEL SHALL BE ASTM A36 CARBON STEEL, & HOT-DIPPED GALVANIZED AFTER FABRICATION IN ACCORDANCE TO ASTM A123

ACCESS: MANHOLE FRAMES, COVERS OR GRATES ARE MANUFACTURED OF GRAY CAST IRON CONFORMING TO ASTM A48-76 CLASS 30. MANHOLE SHALL HAVE 30 INCH INSIDE DIAMETER AND BE TRAFFIC DUTY.

HATCHWAY: H-35 RATED. GALVANIZED STEEL SKID-RESISTANT DOUBLE LEAF

ENGINEERING DATA

INTERCEPTOR IS STRUCTURALLY & HYDRAULICALLY ENGINEERED CONFORMING TO UNIFORM PLUMBING CODE. NOMINAL CAPACITY AS INDICATED.

FIELD EXCAVATION & PREPARATION SHALL BE COMPLETED PRIOR TO DELIVERY OF INTERCEPTOR. USE DIMENSIONAL DATA AS SHOWN.

NPCA CERTIFIED PLANT · ASPE · ASTM

CONTRACTOR TO VERIFY PIPE ANGLE

CONTRACTOR/ENGINEER TO VERIFY ELEVATIONS BEFORE PRODUCTION

MARK:	STORMTROOPER WQ6
LINE:	B2
STA:	1+66.22
SHEET:	178, 170
DATE:	4/17/23

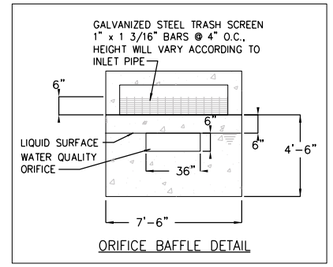

ORIFICE BAFFLE DETAIL

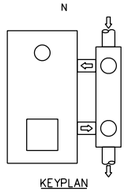

KEYPLAN

PLOTTED ON 6/8/2023 3:44 PM BY Gupta, Shivani, I:\360000\36179\002\Updated Drawings\Segment 1-20284 44 StormTrooper Details\SWAQ-110-BYPASS-+WYOMING SPRINGS SEGMENT 1-20284

© ParkUSA. ALL RIGHTS RESERVED.

GENERAL INFORMATION

THE STORMTROOPER® AQ STORMWATER INTERCEPTOR IS DESIGNED TO RECEIVE & TREAT STORMWATER RUNOFF ON A GRAVITY-FLOW & ONCE-THROUGH BASIS.

GUARANTEED PERFORMANCE

PRE-ENGINEERED COALESCING MEDIA PACKS ARE UTILIZED FOR ENHANCED SEPARATION WHICH PROVIDE SUPERIOR PERFORMANCE COMPARED TO OTHER SEPARATORS WHICH UTILIZE BAFFLES OR DIVERTERS.

APPLICATIONS

THE PARK STORMTROOPER INTERCEPTOR IS DESIGNED FOR STORMWATER RUNOFF FROM COMMERCIAL & INDUSTRIAL APPLICATIONS WHERE EXCESSIVE POLLUTANTS MAY HARM THE ENVIRONMENT OR DAMAGE SEWER SYSTEMS.

BY-PASS DESIGN

A BY-PASS MANHOLE DIVERTS STORMWATER DURING HEAVY PEAK STORM PERIODS. THIS ALLOWS FOR OPTIMAL INTERCEPTOR SIZING.

MAINTENANCE

THE PARK STORMTROOPER INTERCEPTOR REQUIRES MINIMAL MAINTENANCE. HYDROCARBONS & SOLIDS ARE REMOVED FROM THE STORMWATER VIA BAFFLES & COMPARTMENTS.

THESE POLLUTANTS ARE REMOVED FROM THE SEPARATOR WHEN SERVICED BY A LICENSED VACUUM TRUCK OPERATOR.

REV	DATE	BY	DESCRIPTION
A	5/17/23	MAS	ORIGINAL DRAWING

PROJECT: WYOMING SPRINGS SEGMENT 1
CUSTOMER: .
ENGINEER: HALFF ASSOCIATES
ORDER #: . PROJ #: 20-28444
DATE: 5/17/2023 LOCATION: ROUND ROCK, TX

PARK USA A Northwest Pipe Company

STORMTROOPER
STORMWATER QUALITY INTERCEPTOR – UNIT WQ6

PM	PC	DRN	ENG
NW	.	MAS	NS

DWG. NO. SWAQ-40-BYPASS
REV. A
DATE 5/2023

WYOMING SPRINGS
SEGMENT 1
ROUND ROCK, TX

ROUND ROCK TEXAS

halff
13620 BRAKMICK DR
BLDG C, STE 100
AUSTIN, TX 78728
(512) 777-4600
TBPELS FIRM #312

Revision No.	Date	Description

F-312 8/14/23
STATE OF TEXAS
JEFFREY L NAGY
133255
LICENSED PROFESSIONAL ENGINEER

100% SUBMITTAL

Project No.:	36179.002
Issued:	8/24/2023
Drawn By:	SG
Checked By:	JN
Scale:	N.T.S

Sheet Title
WATER QUALITY DETAILS (6 OF 12)

231
Sheet Number

STORMTROOPER® AQ
EDWARDS AQUIFER DESIGN
SERIAL # XXXXX
MODEL # SWAQ-110 DATE MFG 5/23 ORDER # XXXXX
MFG BY PARK USA A Northwest Pipe Company
Pat#: 7,470,381
STORMWATER INTERCEPTOR

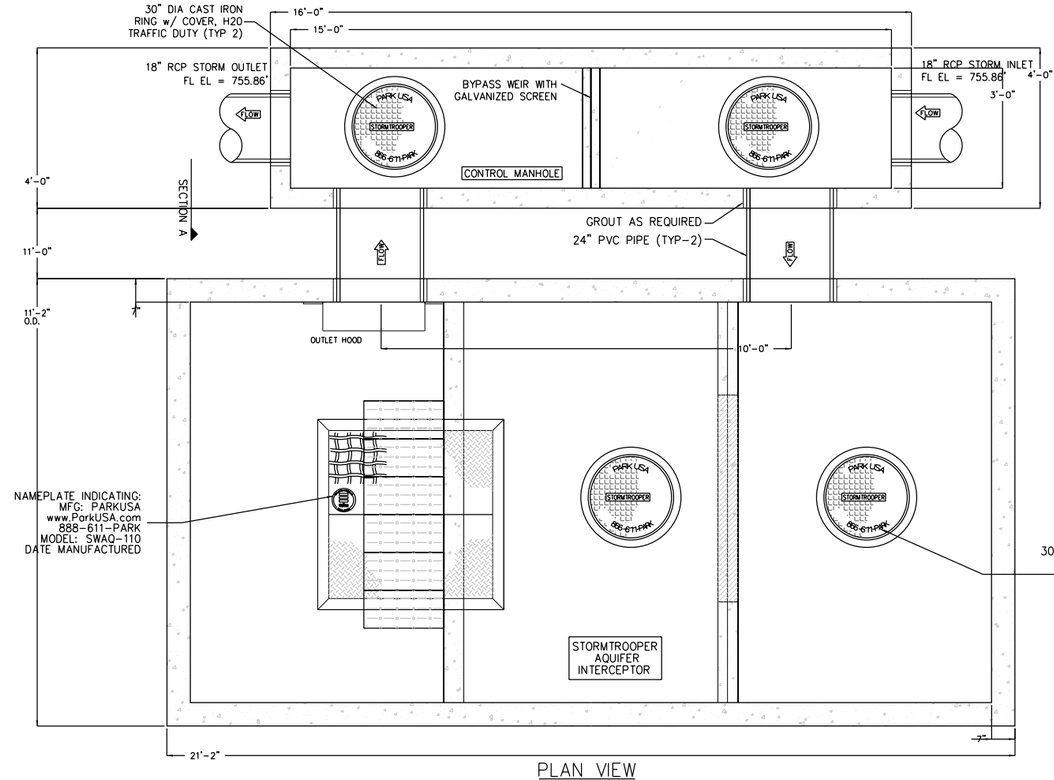

PLAN VIEW

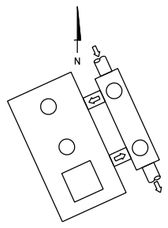

KEYPLAN

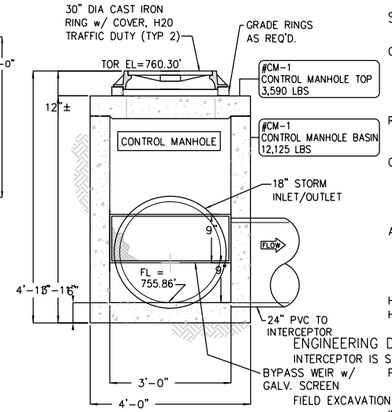

SECTION A

SPECIFICATIONS

CONCRETE: TYPE I/II CEMENT WITH DESIGN STRENGTH OF 4500 PSI AT 28 DAYS. UNIT IS OF MONOLITHIC CONSTRUCTION AT FLOOR & FIRST STAGE OF WALL WITH SECTIONAL RISER TO REQUIRED DEPTH.

REINFORCEMENT: GRADE 60 REINFORCED WITH STEEL REBAR CONFORMING TO ASTM A615 ON REQUIRED CENTERS OR EQUAL.

GRATING: ALL STEEL FABRICATION SHALL BE IN ACCORDANCE TO AWA D1.1. STEEL SHALL BE ASTM A36 CARBON STEEL, & HOT-DIPPED GALVANIZED AFTER FABRICATION IN ACCORDANCE TO ASTM A123

ACCESS: MANHOLE FRAMES, COVERS OR GRATES ARE MANUFACTURED OF GRAY CAST IRON CONFORMING TO ASTM A48-76 CLASS 30. MANHOLE SHALL HAVE 30 INCH INSIDE DIAMETER AND BE TRAFFIC DUTY.

HATCHWAY: H-35 RATED. GALVANIZED STEEL SKID-RESISTANT DOUBLE LEAF

ENGINEERING DATA

INTERCEPTOR IS STRUCTURALLY & HYDRAULICALLY ENGINEERED CONFORMING TO UNIFORM PLUMBING CODE. NOMINAL CAPACITY AS INDICATED.

FIELD EXCAVATION & PREPARATION SHALL BE COMPLETED PRIOR TO DELIVERY OF INTERCEPTOR. USE DIMENSIONAL DATA AS SHOWN.

NPCA CERTIFIED PLANT

ORIFICE BAFFLE DETAIL

MARK:	STORMTROOPER WQ7
LINE:	B
STA:	2+92.46
SHEET:	170
DATE:	4/17/23

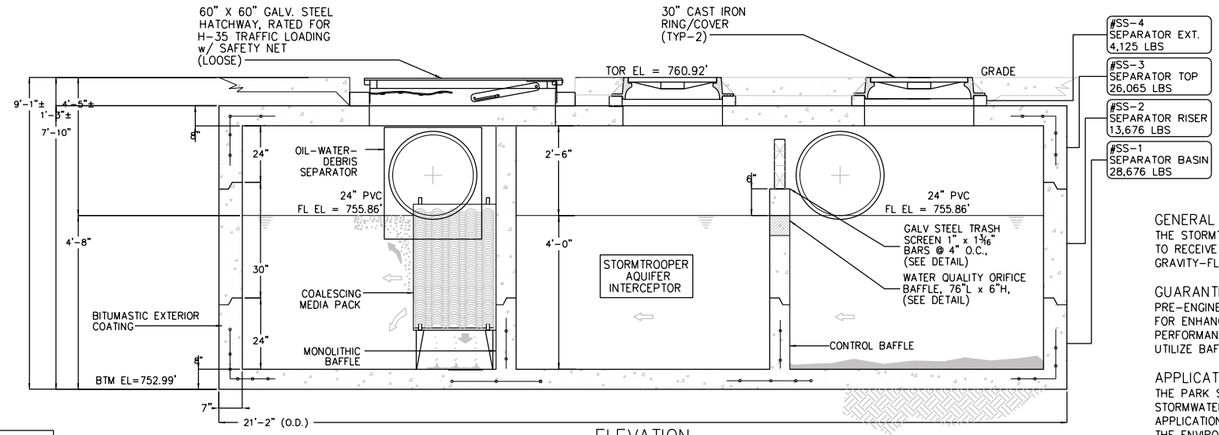

ELEVATION

MODEL NO.	FLOW RATE (gpm)	VAULT SURFACE AREA (sf)	NUMBER OF PLATE COLUMNS	NUMBER OF STACK FEET/ COLUMN	PROJECTED SURFACE AREA OF PLATES (Ft^2)	TOTAL SURFACE AREA OF SYSTEM (Ft^2)	MAXIMUM EFFECTIVE AREA FOR 80% REDUCTION
SWAQ-110	4000	200	6	3.0	713	913	1.23

ENGINEER CONFIRM ELEVATIONS PRIOR TO FABRICATION

GENERAL INFORMATION

THE STORMTROOPER STORMWATER INTERCEPTOR IS DESIGNED TO RECEIVE & TREAT STORMWATER RUNOFF ON A GRAVITY-FLOW AND ONCE-THROUGH BASIS.

GUARANTEED PERFORMANCE

PRE-ENGINEERED COALESCING MEDIA PACKS ARE UTILIZED FOR ENHANCED SEPARATION WHICH PROVIDE SUPERIOR PERFORMANCE COMPARED TO OTHER SEPARATORS WHICH UTILIZE BAFFLES OR DIVERTERS.

APPLICATIONS

THE PARK STORM-TROOPER INTERCEPTOR IS DESIGNED FOR STORMWATER RUNOFF FROM COMMERCIAL & INDUSTRIAL APPLICATIONS WHERE EXCESSIVE POLLUTANTS MAY HARM THE ENVIRONMENT OR DAMAGE SEWER SYSTEMS.

MAINTENANCE

THE PARK STORM-TROOPER INTERCEPTOR REQUIRES MINIMAL MAINTENANCE. HYDROCARBONS AND SOLIDS ARE REMOVED FROM THE STORMWATER VIA BAFFLES AND COMPARTMENTS.

THESE POLLUTANTS ARE REMOVED FROM THE SEPARATOR WHEN SERVICED BY A LICENSED VACUUM TRUCK OPERATOR.

Storm® Trooper AQ
Stormwater Treatment System Patent No: 7,470,381

© ParkUSA. ALL RIGHTS RESERVED.

REV	DATE	BY	DESCRIPTION
A	5/17/23	MAS	ORIGINAL DRAWING

PROJECT: WYOMING SPRINGS SEGMENT 1
CUSTOMER: .
ENGINEER: HALFF ASSOCIATES
ORDER #: . PROJ #: 20-28444
DATE: 5/17/2023 LOCATION: ROUND ROCK, TX

PARK USA A Northwest Pipe Company

STORMTROOPER
STORMWATER QUALITY INTERCEPTOR – UNIT WQ7

PM	PC	DRN	ENG	DWG. NO.	REV.
NW	.	MAS	NS	SWAQ-110-BYPASS	A
DATE 5/2023					

CREATED ON 7/20/2023 BY: ----
LAST MODIFIED ON 7/20/2023 12:20 PM BY: mistrator

PLOTTED ON 6/8/2023 3:45 PM BY: Gupta, Shonil, L:\36000s\36179\002\Design\STORMTROOPER DetailsSWAQ-110-BYPASS--WYOMING SPRINGS SEGMENT 1-20284444

WYOMING SPRINGS
SEGMENT 1
ROUND ROCK, TX

ROUND ROCK TEXAS

halff
13620 BRAKMICK DR
BLDG C, STE 100
AUSTIN, TX 78728
(512) 777-4600
TBPELS FIRM #312

Revision No.	Date	Description

F-312 8/14/23
STATE OF TEXAS
JEFFREY L NAGY
133255
LICENSED PROFESSIONAL ENGINEER

100% SUBMITTAL

Project No.:	36179.002
Issued:	8/24/2023
Drawn By:	SG
Checked By:	JN
Scale:	N.T.S

Sheet Title
WATER QUALITY DETAILS (7 OF 12)

232
Sheet Number



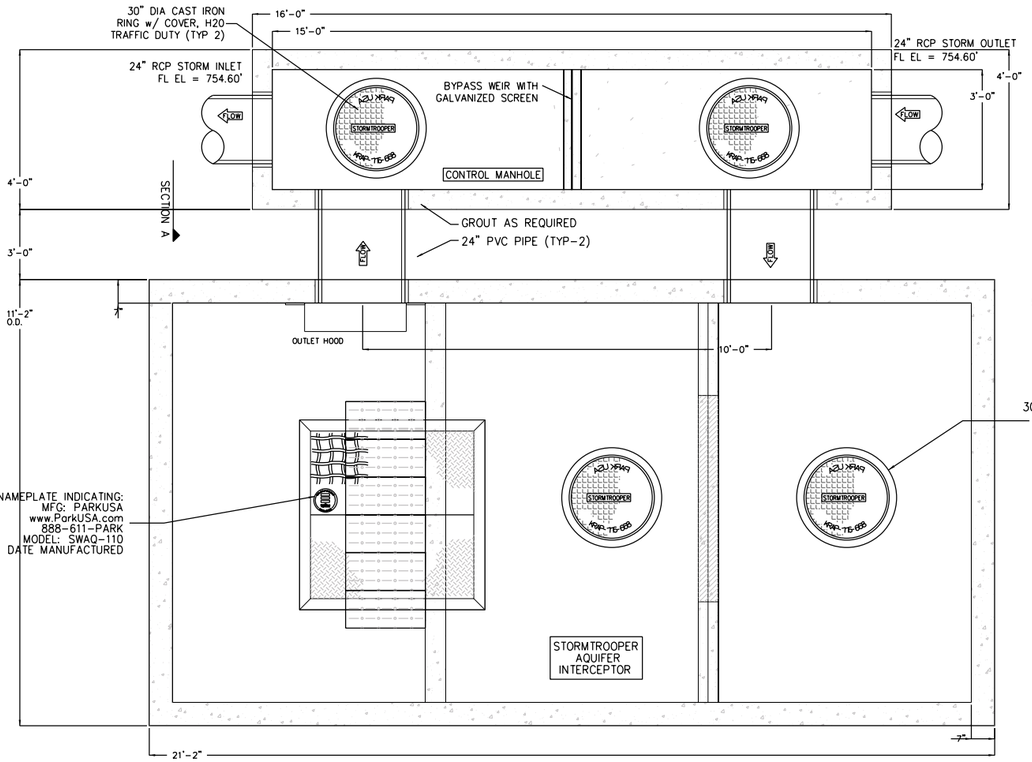

PLAN VIEW

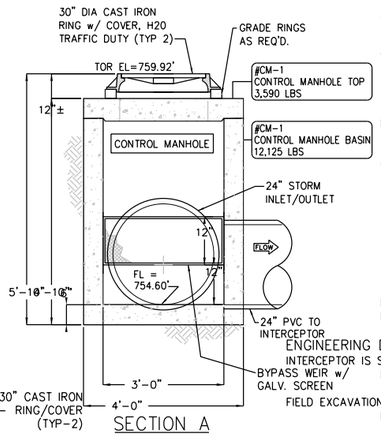

SECTION A

SPECIFICATIONS

CONCRETE: TYPE I/II CEMENT WITH DESIGN STRENGTH OF 4500 PSI AT 28 DAYS. UNIT IS OF MONOLITHIC CONSTRUCTION AT FLOOR & FIRST STAGE OF WALL WITH SECTIONAL RISER TO REQUIRED DEPTH.

REINFORCEMENT: GRADE 60 REINFORCED WITH STEEL REBAR CONFORMING TO ASTM A615 ON REQUIRED CENTERS OR EQUAL.

GRATING: ALL STEEL FABRICATION SHALL BE IN ACCORDANCE TO AWA D1.1. STEEL SHALL BE ASTM A36 CARBON STEEL, & HOT-DIPPED GALVANIZED AFTER FABRICATION IN ACCORDANCE TO ASTM A123

ACCESS: MANHOLE FRAMES, COVERS OR GRATES ARE MANUFACTURED OF GRAY CAST IRON CONFORMING TO ASTM A48-76 CLASS 30. MANHOLE SHALL HAVE 30 INCH INSIDE DIAMETER AND BE TRAFFIC DUTY.

HATCHWAY: GALVANIZED STEEL SKID-RESISTANT DOUBLE LEAF H-35 RATED.

ENGINEERING DATA

INTERCEPTOR IS STRUCTURALLY & HYDRAULICALLY ENGINEERED CONFORMING TO UNIFORM PLUMBING CODE. NOMINAL CAPACITY AS INDICATED.

FIELD EXCAVATION & PREPARATION SHALL BE COMPLETED PRIOR TO DELIVERY OF INTERCEPTOR. USE DIMENSIONAL DATA AS SHOWN.

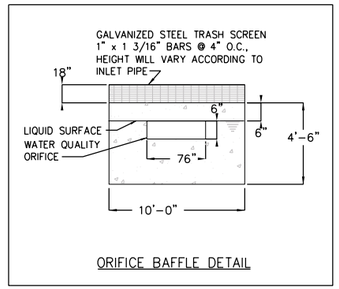

ORIFICE BAFFLE DETAIL

MARK:	STORMTROOPER WQ8
LINE:	C
STA:	5+32.12
SHEET:	172
DATE:	4/17/23

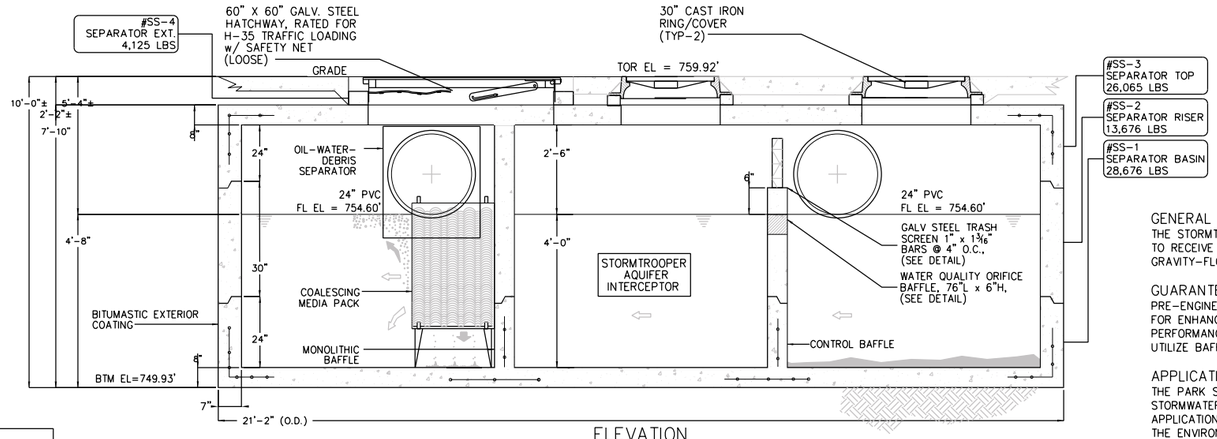

ELEVATION

MODEL NO.	FLOW RATE (gpm)	VAULT SURFACE AREA (sf)	NUMBER OF PLATE COLUMNS	NUMBER OF STACK FEET/ COLUMN	PROJECTED SURFACE AREA OF PLATES (Ft^2)	TOTAL SURFACE AREA OF SYSTEM (Ft^2)	MAXIMUM EFFECTIVE AREA FOR 80% REDUCTION
SWAQ-110	4000	200	6	3.0	713	913	1.23

ENGINEER CONFIRM ELEVATIONS PRIOR TO FABRICATION

GENERAL INFORMATION

THE STORMTROOPER STORMWATER INTERCEPTOR IS DESIGNED TO RECEIVE & TREAT STORMWATER RUNOFF ON A GRAVITY-FLOW AND ONCE-THROUGH BASIS.

GUARANTEED PERFORMANCE

PRE-ENGINEERED COALESCING MEDIA PACKS ARE UTILIZED FOR ENHANCED SEPARATION WHICH PROVIDE SUPERIOR PERFORMANCE COMPARED TO OTHER SEPARATORS WHICH UTILIZE BAFFLES OR DIVERTERS.

APPLICATIONS

THE PARK STORM-TROOPER INTERCEPTOR IS DESIGNED FOR STORMWATER RUNOFF FROM COMMERCIAL & INDUSTRIAL APPLICATIONS WHERE EXCESSIVE POLLUTANTS MAY HARM THE ENVIRONMENT OR DAMAGE SEWER SYSTEMS.

MAINTENANCE

THE PARK STORM-TROOPER INTERCEPTOR REQUIRES MINIMAL MAINTENANCE. HYDROCARBONS AND SOLIDS ARE REMOVED FROM THE STORMWATER VIA BAFFLES AND COMPARTMENTS.

THESE POLLUTANTS ARE REMOVED FROM THE SEPARATOR WHEN SERVICED BY A LICENSED VACUUM TRUCK OPERATOR.

© ParkUSA. ALL RIGHTS RESERVED.

REV	DATE	BY	DESCRIPTION
A	5/17/23	MAS	ORIGINAL DRAWING

PROJECT: WYOMING SPRINGS SEGMENT 1
CUSTOMER: .
ENGINEER: HALFF ASSOCIATES
ORDER #: . PROJ #: 20-28444
DATE: 5/17/2023 LOCATION: ROUND ROCK, TX

STORMTROOPER
STORMWATER QUALITY INTERCEPTOR – UNIT WQ8

PM	PC	DRN	ENG	DWG. NO.	REV.
NW	.	MAS	NS	SWAQ-110-BYPASS	A
DATE 5/2023					

WYOMING SPRINGS
SEGMENT 1
ROUND ROCK, TX

ROUND ROCK TEXAS

halff
13620 BRAKMOCK DR
BLDG C, STE 100
AUSTIN, TX 78728
(512) 777-4600
TBPELS FIRM #312

No.	Date	Revision Description

F-312 5/11/23 STATE OF TEXAS JEFFREY L. NAGY 133255 LICENSED PROFESSIONAL ENGINEER

100% SUBMITTAL

Project No.:	36179.002
Issued:	8/24/2023
Drawn By:	SG
Checked By:	JN
Scale:	N.T.S
Sheet Title	WATER QUALITY DETAILS (8 OF 12)
Sheet Number	233

CREATED ON 7/20/2023 BY: ----
LAST MODIFIED ON 7/20/2023 12:20 PM BY: msalazar

PLOTTED ON 8/8/2023 3:45 PM BY: Gupta, Shweta, L:\36000s\36179\02\Design\WYOMING SPRINGS--STORMTROOPER DETAILS\WAQ-110-BYPASS--STORMTROOPER DETAILS.dgn

STORMTROOPER® AQ
EDWARDS AQUIFER DESIGN
SERIAL # XXXXX
MODEL # SWAQ-110
ORDER # XXXXX
DATE MFG 5/23
MFG BY PARK USA A Northwest Pipe Company
PAT# 7,470,361
STORMWATER INTERCEPTOR

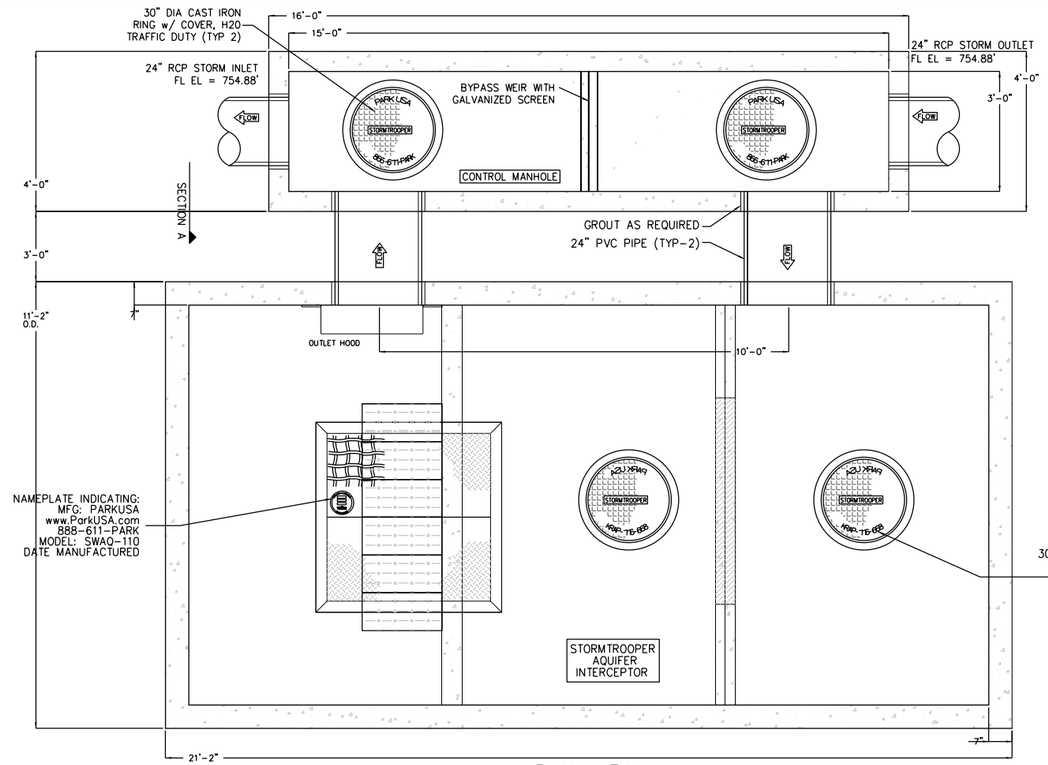

PLAN VIEW

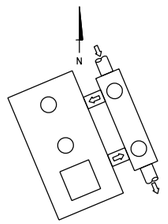

KEYPLAN

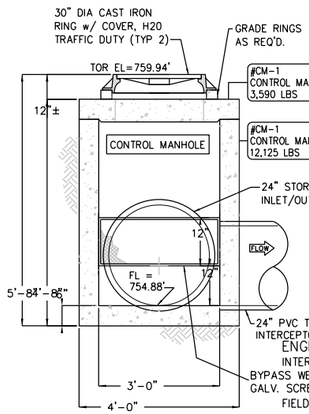

SECTION A

SPECIFICATIONS

CONCRETE: TYPE I/II CEMENT WITH DESIGN STRENGTH OF 4500 PSI AT 28 DAYS. UNIT IS OF MONOLITHIC CONSTRUCTION AT FLOOR & FIRST STAGE OF WALL WITH SECTIONAL RISER TO REQUIRED DEPTH.

REINFORCEMENT: GRADE 60 REINFORCED WITH STEEL REBAR CONFORMING TO ASTM A615 ON REQUIRED CENTERS OR EQUAL.

GRATING: ALL STEEL FABRICATION SHALL BE IN ACCORDANCE TO AWA D1.1. STEEL SHALL BE ASTM A36 CARBON STEEL, & HOT-DIPPED GALVANIZED AFTER FABRICATION IN ACCORDANCE TO ASTM A123

ACCESS: MANHOLE FRAMES, COVERS OR GRATES ARE MANUFACTURED OF GRAY CAST IRON CONFORMING TO ASTM A48-76 CLASS 30. MANHOLE SHALL HAVE 30 INCH INSIDE DIAMETER AND BE TRAFFIC DUTY.

HATCHWAY: GALVANIZED STEEL SKID-RESISTANT DOUBLE LEAF
H-35 RATED.

ENGINEERING DATA

INTERCEPTOR IS STRUCTURALLY & HYDRAULICALLY ENGINEERED CONFORMING TO UNIFORM PLUMBING CODE. NOMINAL CAPACITY AS INDICATED.

FIELD EXCAVATION & PREPARATION SHALL BE COMPLETED PRIOR TO DELIVERY OF INTERCEPTOR. USE DIMENSIONAL DATA AS SHOWN.

NPCA CERTIFIED PLANT

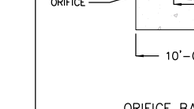

ORIFICE BAFFLE DETAIL

MARK:	STORMTROOPER WQ9
LINE:	C1
STA:	1+80.83
SHEET:	178, 172
DATE:	4/17/23

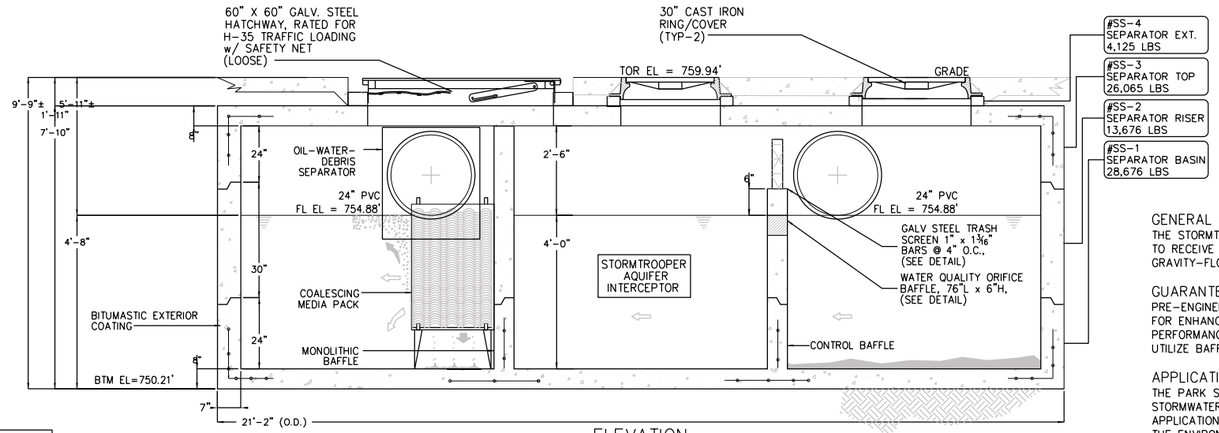

ELEVATION

MODEL NO.	FLOW RATE (gpm)	VAULT SURFACE AREA (sf)	NUMBER OF PLATE COLUMNS	NUMBER OF STACK FEET/ COLUMN	PROJECTED SURFACE AREA OF PLATES (Ft^2)	TOTAL SURFACE AREA OF SYSTEM (Ft^2)	MAXIMUM EFFECTIVE AREA FOR 80% REDUCTION
SWAQ-110	4000	200	6	3.0	713	913	1.23

ENGINEER CONFIRM ELEVATIONS PRIOR TO FABRICATION

GENERAL INFORMATION

THE STORMTROOPER STORMWATER INTERCEPTOR IS DESIGNED TO RECEIVE & TREAT STORMWATER RUNOFF ON A GRAVITY-FLOW AND ONCE-THROUGH BASIS.

GUARANTEED PERFORMANCE

PRE-ENGINEERED COALESCING MEDIA PACKS ARE UTILIZED FOR ENHANCED SEPARATION WHICH PROVIDE SUPERIOR PERFORMANCE COMPARED TO OTHER SEPARATORS WHICH UTILIZE BAFFLES OR DIVERTERS.

APPLICATIONS

THE PARK STORM-TROOPER INTERCEPTOR IS DESIGNED FOR STORMWATER RUNOFF FROM COMMERCIAL & INDUSTRIAL APPLICATIONS WHERE EXCESSIVE POLLUTANTS MAY HARM THE ENVIRONMENT OR DAMAGE SEWER SYSTEMS.

MAINTENANCE

THE PARK STORM-TROOPER INTERCEPTOR REQUIRES MINIMAL MAINTENANCE. HYDROCARBONS AND SOLIDS ARE REMOVED FROM THE STORMWATER VIA BAFFLES AND COMPARTMENTS.

THESE POLLUTANTS ARE REMOVED FROM THE SEPARATOR WHEN SERVICED BY A LICENSED VACUUM TRUCK OPERATOR.

Storm® Trooper AQ
Stormwater Treatment System Patent No: 7,470,361

© ParkUSA. ALL RIGHTS RESERVED.

REV	DATE	BY	DESCRIPTION
A	5/17/23	MAS	ORIGINAL DRAWING
PROJECT:	WYOMING SPRINGS SEGMENT 1		
CUSTOMER:	.		
ENGINEER:	HALFF ASSOCIATES		
ORDER #:	.	PROJ #:	20-28444
DATE:	5/17/2023	LOCATION:	ROUND ROCK, TX

PARK USA
A Northwest Pipe Company

STORMTROOPER
STORMWATER QUALITY INTERCEPTOR – UNIT WQ9

PM	PC	DRN	ENG	DWG. NO.	REV.
NW	.	MAS	NS	SWAQ-110-BYPASS	A
DATE	5/2023				

PLOTTED ON 6/8/2023 3:45 PM BY Gatlo, Shiwani
File: C:\Users\sgatlo\Halff Associates Inc\WYOMING SPRINGS - 20-28444 - Documents\Design\Storm Trooper details\SWAQ-110-BYPASS-STORMTROOPER.dwg

Date: 6/8/2023 4:13:39 PM
Login: sgatlo
Dwg: C:\Users\sgatlo\Halff Associates Inc\WYOMING SPRINGS - 20-28444 - Documents\Design\Storm Trooper details\SWAQ-110-BYPASS-STORMTROOPER.dwg
CREATED ON 7/20/2023 BY ----
LAST MODIFIED ON 7/20/2023 12:20 PM BY mskaizer

WYOMING SPRINGS
SEGMENT 1
ROUND ROCK, TX

ROUND ROCK TEXAS

halff
13620 BRAKMICK DR
BLDG C, STE 100
AUSTIN, TX 78728
(512) 777-4600
TBPELS FIRM #312

Revision No.	Date	Description

F-312 6/14/23
STATE OF TEXAS
JEFFREY L. NAGY
133255
LICENSED PROFESSIONAL ENGINEER

100% SUBMITTAL

Project No.:	36179.002
Issued:	8/24/2023
Drawn By:	SG
Checked By:	JN
Scale:	N.T.S

Sheet Title
WATER QUALITY DETAILS (9 OF 12)

234
Sheet Number

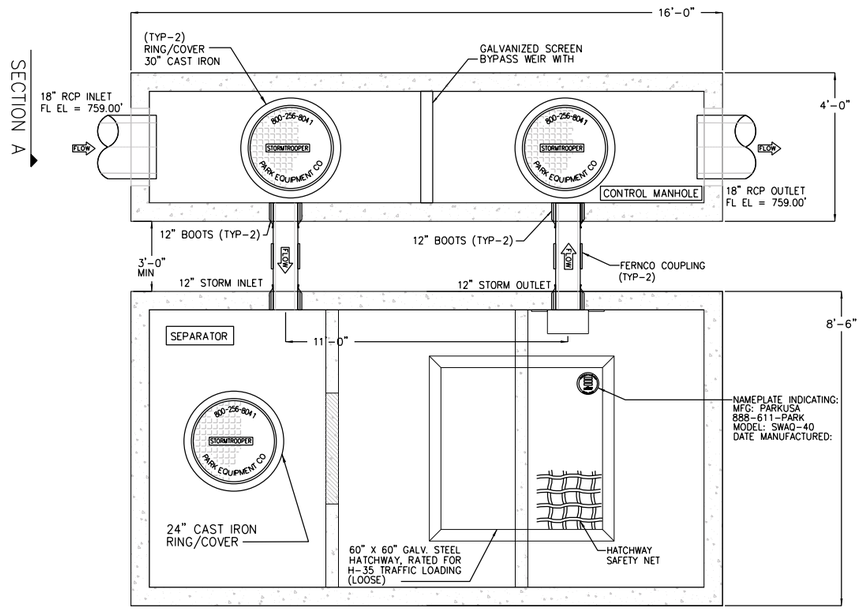

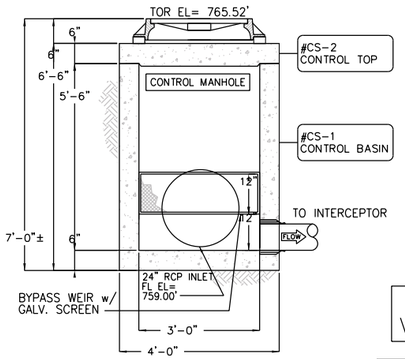

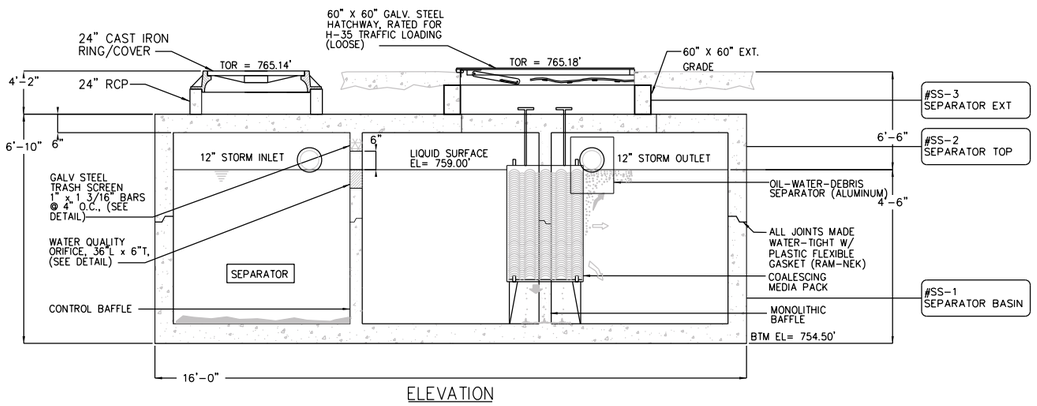

MODEL NO.	FLOW RATE (gpm)	VAULT SURFACE AREA (sf)	NUMBER OF PLATE COLUMNS	NUMBER OF STACK FEET/ COLUMN	PROJECTED SURFACE AREA OF PLATES (Ft^2)	TOTAL SURFACE AREA OF SYSTEM (Ft^2)	MAXIMUM EFFECTIVE AREA FOR 80% REDUCTION
SWAQ-40	2250	113	4	3.0	475	588	0.79

STORMTROOPER® AQ
EDWARDS AQUIFER DESIGN
SERIAL # XXXXX
MODEL # SWAQ-110
ORDER # XXXXX
DATE MFG. 5/23
MFG BY PARK
A Northwest Pipe Company
Pat.#: 7,470,361
STORMWATER INTERCEPTOR

SPECIFICATIONS

CONCRETE: TYPE I/II CEMENT WITH DESIGN STRENGTH OF 4500 PSI AT 28 DAYS. UNIT IS OF MONOLITHIC CONSTRUCTION AT FLOOR & FIRST STAGE OF WALL WITH SECTIONAL RISER TO REQUIRED DEPTH.

REINFORCEMENT: GRADE 60 REINFORCED WITH STEEL REBAR CONFORMING TO ASTM A615 ON REQUIRED CENTERS OR EQUAL.

GRATING: ALL STEEL FABRICATION SHALL BE IN ACCORDANCE TO AWA D1.1. STEEL SHALL BE ASTM A36 CARBON STEEL, & HOT-DIPPED GALVANIZED AFTER FABRICATION IN ACCORDANCE TO ASTM A123

ACCESS: MANHOLE FRAMES, COVERS OR GRATES ARE MANUFACTURED OF GRAY CAST IRON CONFORMING TO ASTM A48-76 CLASS 30. MANHOLE SHALL HAVE 30 INCH INSIDE DIAMETER AND BE TRAFFIC DUTY.

HATCHWAY: GALVANIZED STEEL SKID-RESISTANT DOUBLE LEAF
H-35 RATED.

ENGINEERING DATA
INTERCEPTOR IS STRUCTURALLY & HYDRAULICALLY ENGINEERED CONFORMING TO UNIFORM PLUMBING CODE. NOMINAL CAPACITY AS INDICATED.

FIELD EXCAVATION & PREPARATION SHALL BE COMPLETED PRIOR TO DELIVERY OF INTERCEPTOR. USE DIMENSIONAL DATA AS SHOWN.

NPCA CERTIFIED PLANT · SANITARY ENGINEERING · ASPE American Society of Plumbing Engineers · ASTM

CONTRACTOR TO VERIFY PIPE ANGLE

CONTRACTOR/ENGINEER TO VERIFY ELEVATIONS BEFORE PRODUCTION

MARK:	STORMTROOPER WQ10
LINE:	D
STA:	3+02.04
SHEET:	173
DATE:	4/17/23

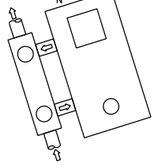

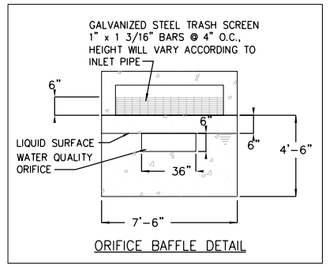

© ParkUSA. ALL RIGHTS RESERVED.

REV	DATE	BY	DESCRIPTION
A	5/17/23	MAS	ORIGINAL DRAWING
PROJECT:	WYOMING SPRINGS SEGMENT 1		
CUSTOMER:	.		
ENGINEER:	HALFF ASSOCIATES		
ORDER #:	.	PROJ #:	20-28444
DATE:	5/17/2023	LOCATION:	ROUND ROCK, TX

GENERAL INFORMATION
THE STORMTROOPER® AQ STORMWATER INTERCEPTOR IS DESIGNED TO RECEIVE & TREAT STORMWATER RUNOFF ON A GRAVITY-FLOW & ONCE-THROUGH BASIS.

GUARANTEED PERFORMANCE
PRE-ENGINEERED COALESCING MEDIA PACKS ARE UTILIZED FOR ENHANCED SEPARATION WHICH PROVIDE SUPERIOR PERFORMANCE COMPARED TO OTHER SEPARATORS WHICH UTILIZE BAFFLES OR DIVERTERS.

APPLICATIONS
THE PARK STORMTROOPER INTERCEPTOR IS DESIGNED FOR STORMWATER RUNOFF FROM COMMERCIAL & INDUSTRIAL APPLICATIONS WHERE EXCESSIVE POLLUTANTS MAY HARM THE ENVIRONMENT OR DAMAGE SEWER SYSTEMS.

BY-PASS DESIGN
A BY-PASS MANHOLE DIVERTS STORMWATER DURING HEAVY PEAK STORM PERIODS. THIS ALLOWS FOR OPTIMAL INTERCEPTOR SIZING.

MAINTENANCE
THE PARK STORMTROOPER INTERCEPTOR REQUIRES MINIMAL MAINTENANCE. HYDROCARBONS & SOLIDS ARE REMOVED FROM THE STORMWATER VIA BAFFLES & COMPARTMENTS.

THESE POLLUTANTS ARE REMOVED FROM THE SEPARATOR WHEN SERVICED BY A LICENSED VACUUM TRUCK OPERATOR.

PARK USA
A Northwest Pipe Company

STORMTROOPER
STORMWATER QUALITY INTERCEPTOR – UNIT WQ10

PM	PC	DRN	ENG
NW	.	MAS	NS

DATE 5/2023

DWG. NO. SWAQ-40-BYPASS

REV. A

WYOMING SPRINGS
SEGMENT 1
ROUND ROCK, TX

ROUND ROCK TEXAS

halff
13620 BRAKMICK DR
BLDG C, STE 100
AUSTIN, TX 78728
(512) 777-4600
TBPELS FIRM #312

Revision No.	Date	Description

E-312 8/14/23
STATE OF TEXAS
JEFFREY L NAGY
133255
LICENSED PROFESSIONAL ENGINEER

100% SUBMITTAL

Project No.:	36179.002
Issued:	8/24/2023
Drawn By:	SG
Checked By:	JN
Scale:	N.T.S

Sheet Title
WATER QUALITY DETAILS (10 OF 12)

235
Sheet Number

CREATED ON 7/20/2023 BY ----
LAST MODIFIED ON 7/20/2023 12:20 PM BY mdaszar

PLOTTED ON 8/8/2023 3:43 PM BY Castle, Shawn; L:\MSWDS\36179\WQ\Design\★ Stormtrooper Details\WQ-10-BYPASS-WYOMING SPRINGS SEGMENT 1-20284444

STORMTROOPER® AQ
EDWARDS AQUIFER DESIGN
SERIAL # XXXXX
MODEL # SWAQ-110
ORDER # XXXXX
DATE MFG 5/23
MFG BY PARK USA A Northwest Pipe Company
Pat#: 7,470,361
STORMWATER INTERCEPTOR

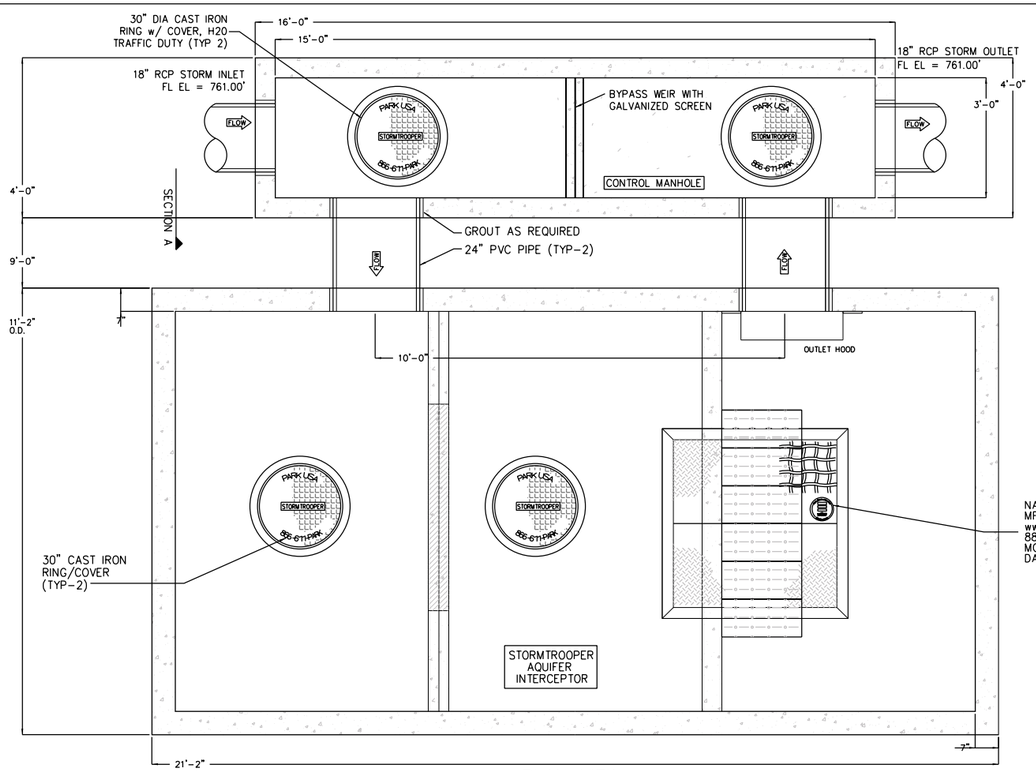

PLAN VIEW

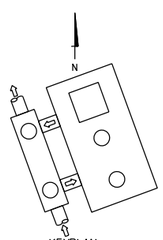

NAMEPLATE INDICATING:
MFG: PARKUSA
www.ParkUSA.com
888-611-PARK
MODEL: SWAQ-110
DATE MANUFACTURED

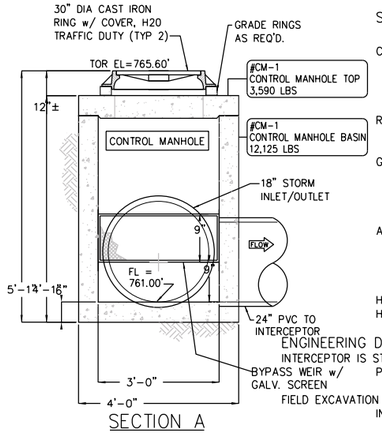

SECTION A

SPECIFICATIONS

CONCRETE: TYPE I/II CEMENT WITH DESIGN STRENGTH OF 4500 PSI AT 28 DAYS. UNIT IS OF MONOLITHIC CONSTRUCTION AT FLOOR & FIRST STAGE OF WALL WITH SECTIONAL RISER TO REQUIRED DEPTH.

REINFORCEMENT: GRADE 60 REINFORCED WITH STEEL REBAR CONFORMING TO ASTM A615 ON REQUIRED CENTERS OR EQUAL.

GRATING: ALL STEEL FABRICATION SHALL BE IN ACCORDANCE TO AWA D1.1. STEEL SHALL BE ASTM A36 CARBON STEEL, & HOT-DIPPED GALVANIZED AFTER FABRICATION IN ACCORDANCE TO ASTM A123

ACCESS: MANHOLE FRAMES, COVERS OR GRATES ARE MANUFACTURED OF GRAY CAST IRON CONFORMING TO ASTM A48-76 CLASS 30. MANHOLE SHALL HAVE 30 INCH INSIDE DIAMETER AND BE TRAFFIC DUTY.

HATCHWAY: H-35 RATED. GALVANIZED STEEL SKID-RESISTANT DOUBLE LEAF

ENGINEERING DATA

INTERCEPTOR IS STRUCTURALLY & HYDRAULICALLY ENGINEERED CONFORMING TO UNIFORM PLUMBING CODE. NOMINAL CAPACITY AS INDICATED.

FIELD EXCAVATION & PREPARATION SHALL BE COMPLETED PRIOR TO DELIVERY OF INTERCEPTOR. USE DIMENSIONAL DATA AS SHOWN.

NPCA CERTIFIED PLANT · ASPE American Society of Plumbing Engineers · ASTM

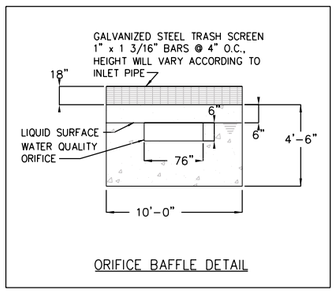

ORIFICE BAFFLE DETAIL

MARK:	STORMTROOPER WQ11
LINE:	01
STA:	1+70.70
SHEET:	178, 173
DATE:	4/17/23

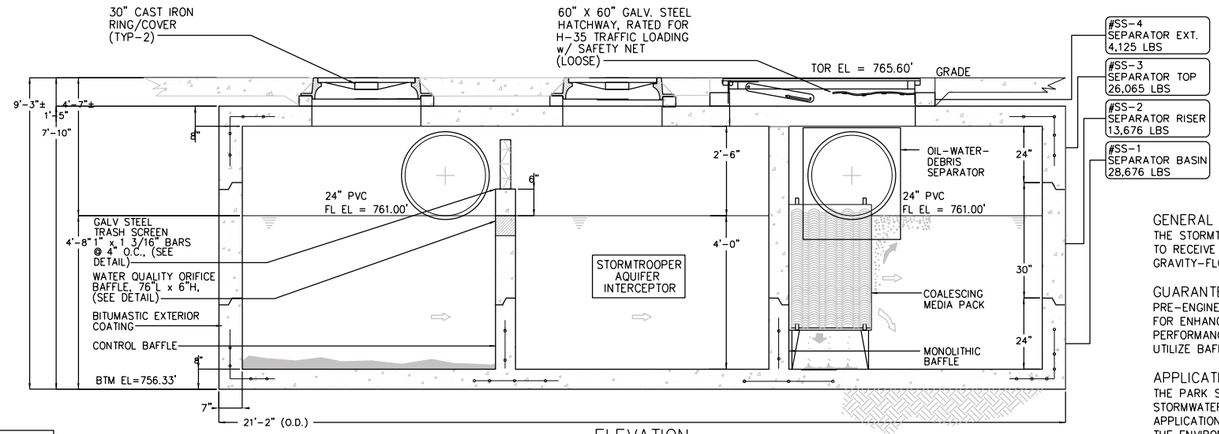

ELEVATION

MODEL NO.	FLOW RATE (gpm)	VAULT SURFACE AREA (sf)	NUMBER OF PLATE COLUMNS	NUMBER OF STACK FEET/ COLUMN	PROJECTED SURFACE AREA OF PLATES (Ft^2)	TOTAL SURFACE AREA OF SYSTEM (Ft^2)	MAXIMUM EFFECTIVE AREA FOR 80% REDUCTION
SWAQ-110	4000	200	6	3.0	713	913	1.23

ENGINEER CONFIRM ELEVATIONS PRIOR TO FABRICATION

GENERAL INFORMATION

THE STORMTROOPER STORMWATER INTERCEPTOR IS DESIGNED TO RECEIVE & TREAT STORMWATER RUNOFF ON A GRAVITY-FLOW AND ONCE-THROUGH BASIS.

GUARANTEED PERFORMANCE

PRE-ENGINEERED COALESCING MEDIA PACKS ARE UTILIZED FOR ENHANCED SEPARATION WHICH PROVIDE SUPERIOR PERFORMANCE COMPARED TO OTHER SEPARATORS WHICH UTILIZE BAFFLES OR DIVERTERS.

APPLICATIONS

THE PARK STORM-TROOPER INTERCEPTOR IS DESIGNED FOR STORMWATER RUNOFF FROM COMMERCIAL & INDUSTRIAL APPLICATIONS WHERE EXCESSIVE POLLUTANTS MAY HARM THE ENVIRONMENT OR DAMAGE SEWER SYSTEMS.

MAINTENANCE

THE PARK STORM-TROOPER INTERCEPTOR REQUIRES MINIMAL MAINTENANCE. HYDROCARBONS AND SOLIDS ARE REMOVED FROM THE STORMWATER VIA BAFFLES AND COMPARTMENTS.

THESE POLLUTANTS ARE REMOVED FROM THE SEPARATOR WHEN SERVICED BY A LICENSED VACUUM TRUCK OPERATOR.

Storm® Trooper AQ
Stormwater Treatment System Patent No: 7,470,361

© ParkUSA. ALL RIGHTS RESERVED.

REV	DATE	BY	DESCRIPTION
A	5/17/23	MAS	ORIGINAL DRAWING

PROJECT: WYOMING SPRINGS SEGMENT 1
CUSTOMER: .
ENGINEER: HALFF ASSOCIATES
ORDER #: . PROJ #: 20-28444
DATE: 5/17/2023 LOCATION: ROUND ROCK, TX

PARK USA A Northwest Pipe Company

STORMTROOPER
STORMWATER QUALITY INTERCEPTOR – UNIT WQ11

PM	PC	DRN	ENG
NW	.	MAS	NS

DWG. NO. SWAQ-110-BYPASS
REV. A
DATE 5/2023

PLOTTED ON 6/8/2023 3:45 PM BY Gatis, Shawn, L:\36000s\36179\007\Jordan Stormtrooper Details\SWAQ-110-BYPASS-WYOMING SPRINGS SEGMENT 1-R28444

CREATED ON 7/20/2023 BY: -----
LAST MODIFIED ON 7/20/2023 12:20 PM BY mseacor

WYOMING SPRINGS
SEGMENT 1
ROUND ROCK, TX

ROUND ROCK TEXAS

halff
13620 BRAKER ROCK DR
BLDG C, STE 100
AUSTIN, TX 78728
(512) 777-4600
TBPELS FIRM #312

No.	Date	Revision Description

E-312 8/14/23
STATE OF TEXAS
JEFFREY L. NAGY
133255
LICENSED PROFESSIONAL ENGINEER

100% SUBMITTAL

Project No.:	36179.002
Issued:	6/24/2023
Drawn By:	SG
Checked By:	JN
Scale:	N.T.S

Sheet Title
WATER QUALITY DETAILS (11 OF 12)

236
Sheet Number

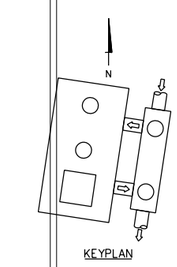

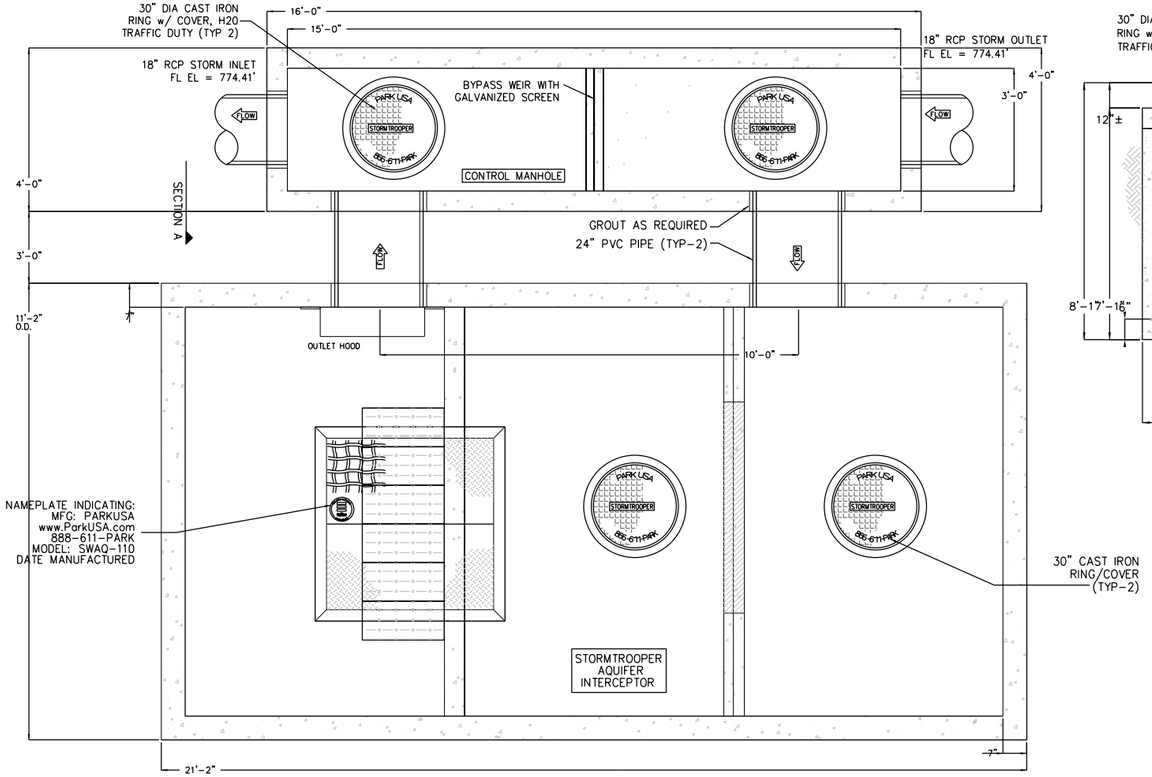

PLAN VIEW

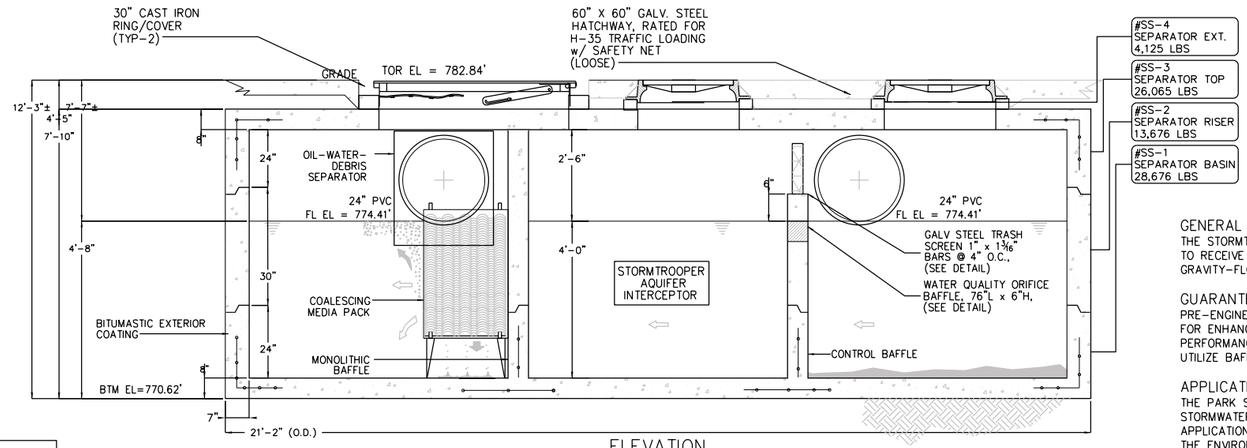

ELEVATION

MODEL NO.	FLOW RATE (gpm)	VAULT SURFACE AREA (sf)	NUMBER OF PLATE COLUMNS	NUMBER OF STACK FEET/ COLUMN	PROJECTED SURFACE AREA OF PLATES (Ft^2)	TOTAL SURFACE AREA OF SYSTEM (Ft^2)	MAXIMUM EFFECTIVE AREA FOR 80% REDUCTION
SWAQ-110	4000	200	6	3.0	713	913	1.23

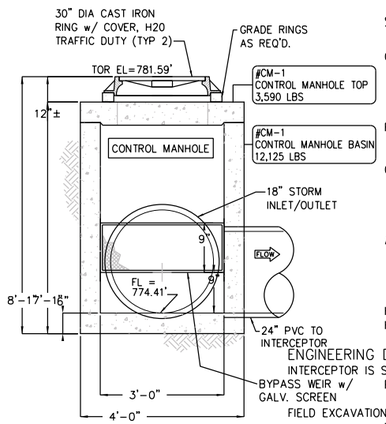

SECTION A

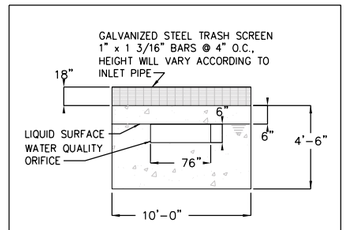

ORIFICE BAFFLE DETAIL

SPECIFICATIONS

CONCRETE: TYPE I/II CEMENT WITH DESIGN STRENGTH OF 4500 PSI AT 28 DAYS. UNIT IS OF MONOLITHIC CONSTRUCTION AT FLOOR & FIRST STAGE OF WALL WITH SECTIONAL RISER TO REQUIRED DEPTH.

REINFORCEMENT: GRADE 60 REINFORCED WITH STEEL REBAR CONFORMING TO ASTM A615 ON REQUIRED CENTERS OR EQUAL.

GRATING: ALL STEEL FABRICATION SHALL BE IN ACCORDANCE TO AWA D1.1. STEEL SHALL BE ASTM A36 CARBON STEEL, & HOT-DIPPED GALVANIZED AFTER FABRICATION IN ACCORDANCE TO ASTM A123

ACCESS: MANHOLE FRAMES, COVERS OR GRATES ARE MANUFACTURED OF GRAY CAST IRON CONFORMING TO ASTM A48-76 CLASS 30. MANHOLE SHALL HAVE 30 INCH INSIDE DIAMETER AND BE TRAFFIC DUTY.

HATCHWAY: H-35 RATED. GALVANIZED STEEL SKID-RESISTANT DOUBLE LEAF

ENGINEERING DATA

INTERCEPTOR IS STRUCTURALLY & HYDRAULICALLY ENGINEERED CONFORMING TO UNIFORM PLUMBING CODE. NOMINAL CAPACITY AS INDICATED.

FIELD EXCAVATION & PREPARATION SHALL BE COMPLETED PRIOR TO DELIVERY OF INTERCEPTOR. USE DIMENSIONAL DATA AS SHOWN.

MARK:	STORMTROOPER WQ12
LINE:	E
STA:	2+51.43
SHEET:	174
DATE:	4/17/23

GENERAL INFORMATION

THE STORMTROOPER STORMWATER INTERCEPTOR IS DESIGNED TO RECEIVE & TREAT STORMWATER RUNOFF ON A GRAVITY-FLOW AND ONCE-THROUGH BASIS.

GUARANTEED PERFORMANCE

PRE-ENGINEERED COALESCING MEDIA PACKS ARE UTILIZED FOR ENHANCED SEPARATION WHICH PROVIDE SUPERIOR PERFORMANCE COMPARED TO OTHER SEPARATORS WHICH UTILIZE BAFFLES OR DIVERTERS.

APPLICATIONS

THE PARK STORM-TROOPER INTERCEPTOR IS DESIGNED FOR STORMWATER RUNOFF FROM COMMERCIAL & INDUSTRIAL APPLICATIONS WHERE EXCESSIVE POLLUTANTS MAY HARM THE ENVIRONMENT OR DAMAGE SEWER SYSTEMS.

MAINTENANCE

THE PARK STORM-TROOPER INTERCEPTOR REQUIRES MINIMAL MAINTENANCE. HYDROCARBONS AND SOLIDS ARE REMOVED FROM THE STORMWATER VIA BAFFLES AND COMPARTMENTS.

THESE POLLUTANTS ARE REMOVED FROM THE SEPARATOR WHEN SERVICED BY A LICENSED VACUUM TRUCK OPERATOR.

ENGINEER CONFIRM ELEVATIONS PRIOR TO FABRICATION

Storm® Trooper AQ
Stormwater Treatment System Patent No: 7,470,361

© ParkUSA. ALL RIGHTS RESERVED.

REV	DATE	BY	DESCRIPTION
A	5/17/23	MAS	ORIGINAL DRAWING

PROJECT: WYOMING SPRINGS SEGMENT 1
CUSTOMER: .
ENGINEER: HALFF ASSOCIATES
ORDER #: . PROJ #: 20-28444
DATE: 5/17/2023 LOCATION: ROUND ROCK, TX

PARK USA
A Northwest Pipe Company

STORMTROOPER
STORMWATER QUALITY INTERCEPTOR – UNIT WQ12

PM	PC	DRN	ENG
NW	.	MAS	NS

DATE 5/2023 | DWG. NO. SWAQ-110-BYPASS | REV. A

WYOMING SPRINGS
SEGMENT 1
ROUND ROCK, TX

ROUND ROCK TEXAS

halff
13620 BRAKWICK DR
BLDG C, STE 100
AUSTIN, TX 78729
(512) 777-4600
TBPELS FIRM #312

Revision No.	Date	Description

F-312 8/14/23
STATE OF TEXAS
JEFFREY L. NAGY
133255
LICENSED PROFESSIONAL ENGINEER

100% SUBMITTAL

Project No.:	36179.002
Issued:	8/24/2023
Drawn By:	SG
Checked By:	JN
Scale:	N.T.S

Sheet Title
WATER QUALITY DETAILS (12 OF 12)

237
Sheet Number

CREATED ON 7/20/2023 BY ---
LAST MODIFIED ON 7/20/2023 12:20 PM BY mmaster
PLOTTED ON 8/8/2023 3:45 PM BY Gupta, Shweta, L:\36000s\36179\002\Details\WYOMING SPRINGS SEGMENT 1-202844
e:\e StormTrooper Details\SWAQ-110-BYPASS--WYOMING SPRINGS SEGMENT 1.dgn

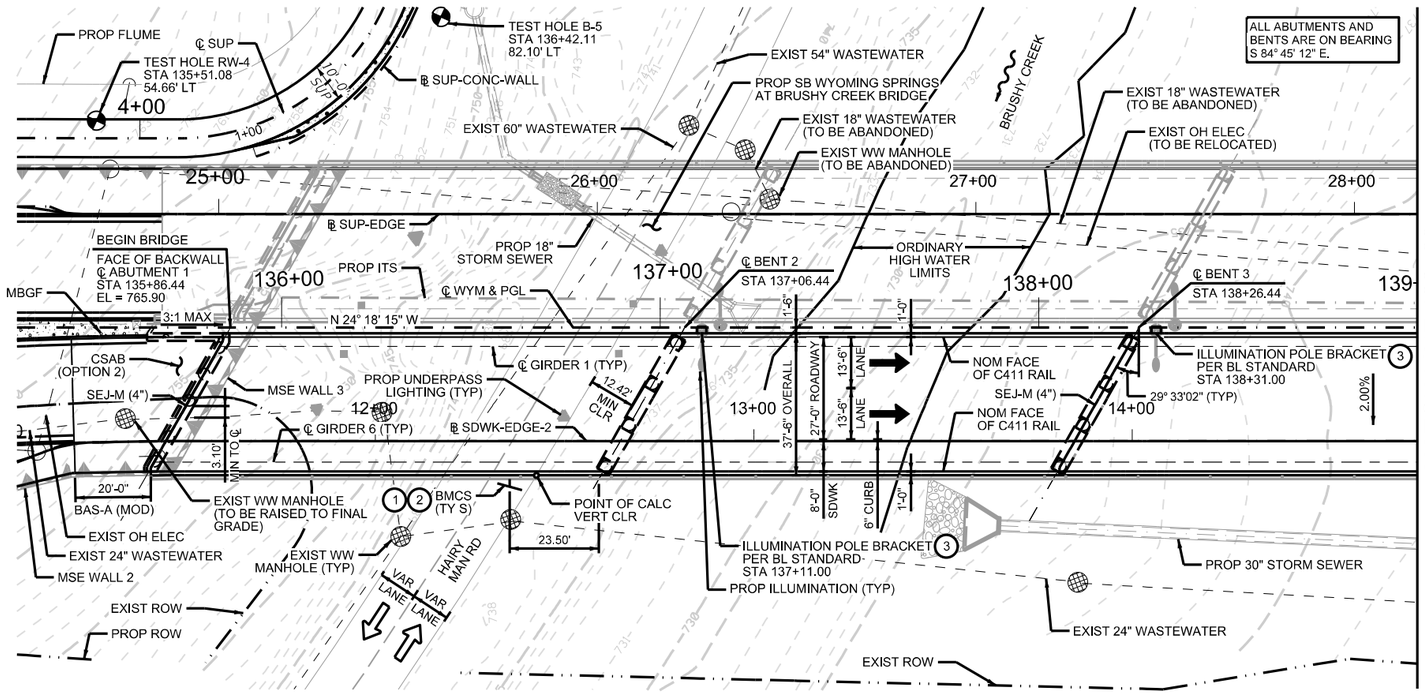

PLAN

ALL ABUTMENTS AND BENTS ARE ON BEARING S 84° 45' 12" E.

DESIGN SPEED: 45 MPH
FUNCTIONAL CLASS: ARTERIAL
2022 ADT: 3,800
2042 ADT: 7,550
NBI NO: 14-246-E020-21-003

GENERAL NOTES:
1. DESIGNED IN ACCORDANCE WITH AASHTO LRFD BRIDGE DESIGN SPECIFICATIONS, 9TH EDITION (2020).
2. ALL DIMENSIONS ARE EITHER HORIZONTAL OR VERTICAL AND MUST BE CORRECTED FOR GRADE AND CROWN.
3. "H" VALUES SHOWN ARE ESTIMATED COLUMN HEIGHTS. CONTRACTOR IS RESPONSIBLE FOR CALCULATING ACTUAL COLUMN HEIGHTS BASED ON FIELD CONDITIONS.
4. CONTRACTOR SHALL VERIFY LOCATIONS OF EXISTING UTILITIES PRIOR TO CONSTRUCTION.
5. "D" DENOTES BENTS WITH DOWELED END CONDITION. SEE BENT SHEETS FOR LOCATIONS OF DOWELS D.
6. SEE "BORING LOGS" SHEETS FOR BORING LOG INFORMATION.
7. SEE "AESTHETIC DETAILS" SHEETS FOR AESTHETIC INFORMATION.
8. SEE "ILLUMINATION PLAN" AND "PCGU" SHEETS FOR ILLUMINATION AND FUTURE ITS INFORMATION.

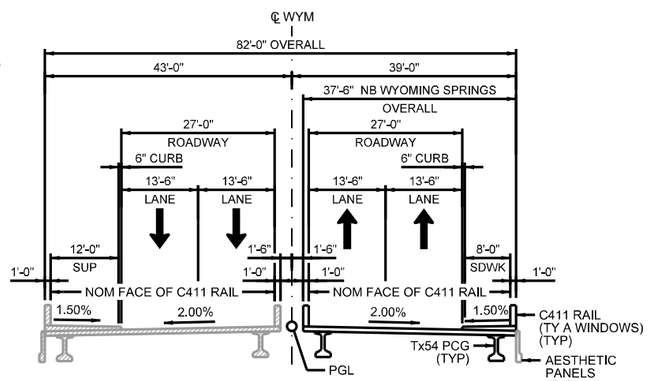

TYPICAL SECTION

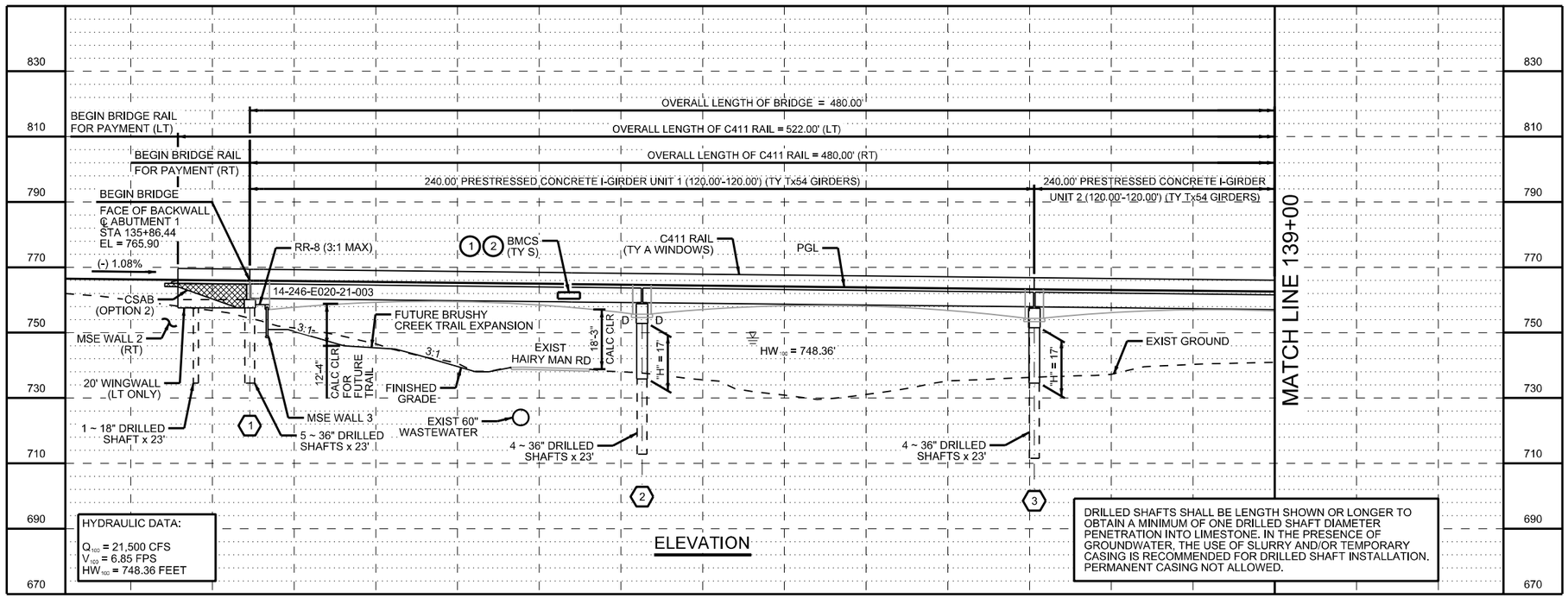

ELEVATION

HYDRAULIC DATA:
Q_{100} = 21,500 CFS
V_{100} = 6.85 FPS
HW_{100} = 748.36 FEET

DRILLED SHAFTS SHALL BE LENGTH SHOWN OR LONGER TO OBTAIN A MINIMUM OF ONE DRILLED SHAFT DIAMETER PENETRATION INTO LIMESTONE. IN THE PRESENCE OF GROUNDWATER, THE USE OF SLURRY AND/OR TEMPORARY CASING IS RECOMMENDED FOR DRILLED SHAFT INSTALLATION. PERMANENT CASING NOT ALLOWED.

0 20 40 60 80

SCALE: 1"=40'

1. 16'-9" CALC CLR AT SB WYOMING SPRINGS AT BRUSHY CREEK FOR SIGN.
2. SEE BMCS(MOD) STANDARD FOR ATTACHMENT TO AESTHETIC PANEL.
3. CONDUIT FOR ILLUMINATION POLE BRACKET SHALL BE PLACED PRIOR TO REINFORCED CONCRETE SLAB POUR.

HL93 LOADING

WYOMING SPRINGS
SEGMENT 1
ROUND ROCK, TX

ROUND ROCK, TEXAS

AGUIRRE & FIELDS
ENGINEERING INNOVATORS
TBPE FIRM REGISTRATION # 739

Revision No.	Date	Description

STATE OF TEXAS
RYAN J. WILLIAMS
110418
LICENSED
PROFESSIONAL ENGINEER
4/20/2023

100% SUBMITTAL

Project No.:	36179
Issued:	4/20/2023
Drawn By:	QBH
Checked By:	RJW
Scale:	

Sheet Title
NB WYOMING SPRINGS AT BRUSHY CREEK BRIDGE LAYOUT
SHEET 01 OF 02

238
Sheet Number

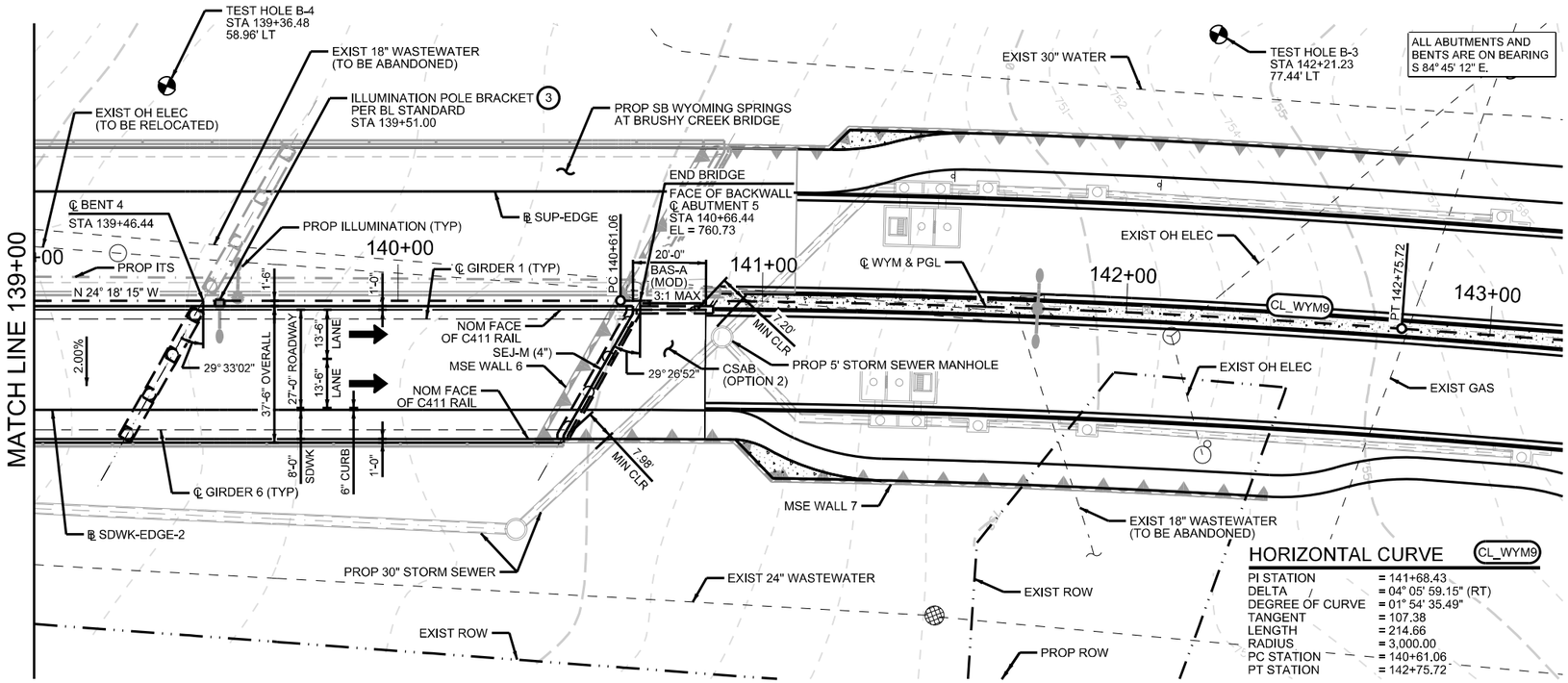

PLAN

ALL ABUTMENTS AND BENTS ARE ON BEARING S 84° 45' 12" E.

GENERAL NOTES:
1. REFER TO BRIDGE LAYOUT SHEET 01 OF 02 FOR GENERAL NOTES.

HORIZONTAL CURVE CL_WYM9

PI STATION	= 141+68.43
DELTA	= 04° 05' 59.15" (RT)
DEGREE OF CURVE	= 01° 54' 35.49"
TANGENT	= 107.38
LENGTH	= 214.66
RADIUS	= 3,000.00
PC STATION	= 140+61.06
PT STATION	= 142+75.72

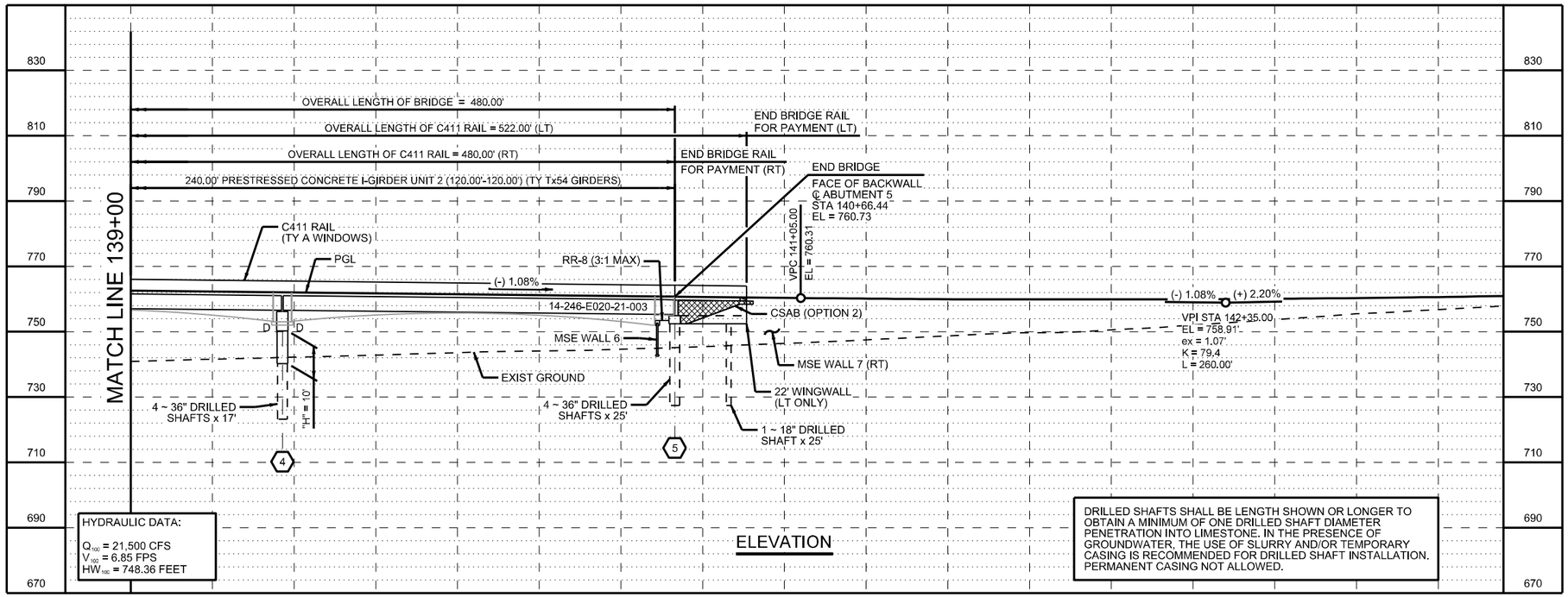

ELEVATION

0 20 40 60 80

SCALE: 1"=40'

(3) CONDUIT FOR ILLUMINATION POLE BRACKET SHALL BE PLACED PRIOR TO REINFORCED CONCRETE SLAB POUR.

HYDRAULIC DATA:

Q_{100} = 21,500 CFS
V_{100} = 6.85 FPS
HW_{100} = 748.36 FEET

DRILLED SHAFTS SHALL BE LENGTH SHOWN OR LONGER TO OBTAIN A MINIMUM OF ONE DRILLED SHAFT DIAMETER PENETRATION INTO LIMESTONE. IN THE PRESENCE OF GROUNDWATER, THE USE OF SLURRY AND/OR TEMPORARY CASING IS RECOMMENDED FOR DRILLED SHAFT INSTALLATION. PERMANENT CASING NOT ALLOWED.

HL93 LOADING

WYOMING SPRINGS
SEGMENT 1
ROUND ROCK, TX

AGUIRRE & FIELDS
ENGINEERING INNOVATORS
TBPE FIRM REGISTRATION # 739

Revision No.	Date	Description

STATE OF TEXAS
RYAN J. WILLIAMS
110418
LICENSED
PROFESSIONAL ENGINEER
4/20/2023

100% SUBMITTAL

Project No.:	36179
Issued:	4/20/2023
Drawn By:	QBH
Checked By:	RJW
Scale:	

Sheet Title
NB WYOMING SPRINGS AT BRUSHY CREEK BRIDGE LAYOUT SHEET 02 OF 02

239
Sheet Number

SUMMARY OF BRIDGE QUANTITIES

ITEM	400	416	416	420	420	420	420	422	422	422	425	427	432	442	450	454
BID CODE	6005	6001	6004	6013	6029	6037	6225	6001	6013	6015	6039	6002	6002	6007	6036	6018
DESCRIPTION (NBI #: 14-246-E020-21-003)	CEM STABIL BKFL	DRILL SHAFT (18 IN)	DRILL SHAFT (36 IN)	CL C CONC (ABUT) (1)	CL C CONC (CAP) (1)	CL C CONC (COLUMN)	CL H CONC (FASCIA PANEL) (2)	REINF CONC SLAB	BRIDGE SIDEWALK	APPROACH SLAB	PRESTR CONC GIRDER (TX54)	CONCRETE PAINT FINISH	RIPRAP (CONC) (5 IN)	STR STEEL (MISC NON - BRIDGE) (3)	RAIL (TY C411)	SEALED EXPANSION JOINT (4 IN) (SEJ-M)
UNIT	CY	LF	LF	CY	CY	CY	CY	SF	SF	CY	LF	SF	CY	LB	LF	LF
ABUTMENTS 1 & 5	210.0	48	215	58.4					501	88.1			6		42	
BENTS 2-4			252		91.5	69.1						4,030				
2 ~ 240.00' PRESTRESSED CONCRETE I-GIRDER UNITS							98.4	18,000	4,560		2,867.76	19,950		382.8	960.0	96
TOTAL	210.0	48	467	58.4	91.5	69.1	98.4	18,000	5,061	88.1	2,867.76	23,980	6	382.8	1,002.0	96

(1) QUANTITY INCLUDES SHEAR KEYS

(2) QUANTITY FOR AESTHETIC PANELS

(3) QUANTITY FOR BRIDGE SIDEWALK EXPANSION JOINT COVER PLATE

BEARING SEAT ELEVATIONS

	BEAM 1	BEAM 2	BEAM 3	BEAM 4	BEAM 5	BEAM 6
ABUT 1 (FWD)	760.074	759.990	759.905	759.820	759.736	759.651
	BEAM 1	BEAM 2	BEAM 3	BEAM 4	BEAM 5	BEAM 6
BENT 2 (BK)	758.803	758.718	758.634	758.549	758.464	758.380
(FWD)	758.782	758.697	758.612	758.528	758.443	758.358
	BEAM 1	BEAM 2	BEAM 3	BEAM 4	BEAM 5	BEAM 6
BENT 3 (BK)	757.509	757.424	757.339	757.255	757.170	757.085
(FWD)	757.487	757.402	757.318	757.233	757.148	757.064
	BEAM 1	BEAM 2	BEAM 3	BEAM 4	BEAM 5	BEAM 6
BENT 4 (BK)	756.214	756.129	756.045	755.960	755.875	755.791
(FWD)	756.193	756.108	756.023	755.939	755.854	755.769
	BEAM 1	BEAM 2	BEAM 3	BEAM 4	BEAM 5	BEAM 6
ABUT 5 (BK)	754.921	754.837	754.752	754.667	754.582	754.498

HL93 LOADING

WYOMING SPRINGS
SEGMENT 1
ROUND ROCK, TX

ROUND ROCK, TEXAS

AGUIRRE & FIELDS
ENGINEERING INNOVATORS
TBPE FIRM REGISTRATION # 739

Revision No.	Date	Description

STATE OF TEXAS
RYAN J. WILLIAMS
110418
LICENSED
PROFESSIONAL ENGINEER
4/17/2023

100% SUBMITTAL

Project No.:	36179
Issued:	4/17/2023
Drawn By:	QBH
Checked By:	RJW
Scale:	

Sheet Title
NB WYOMING SPRINGS AT BRUSHY CREEK ESTIMATED QUANTITIES & BRG SEAT ELEVATIONS

240
Sheet Number

4/17/2023 11:29:14 AM USERS default CITY OF ROUND ROCK Dwgs DALLAS 181112pw.ctb NORTH OFFICE MICROSTATION

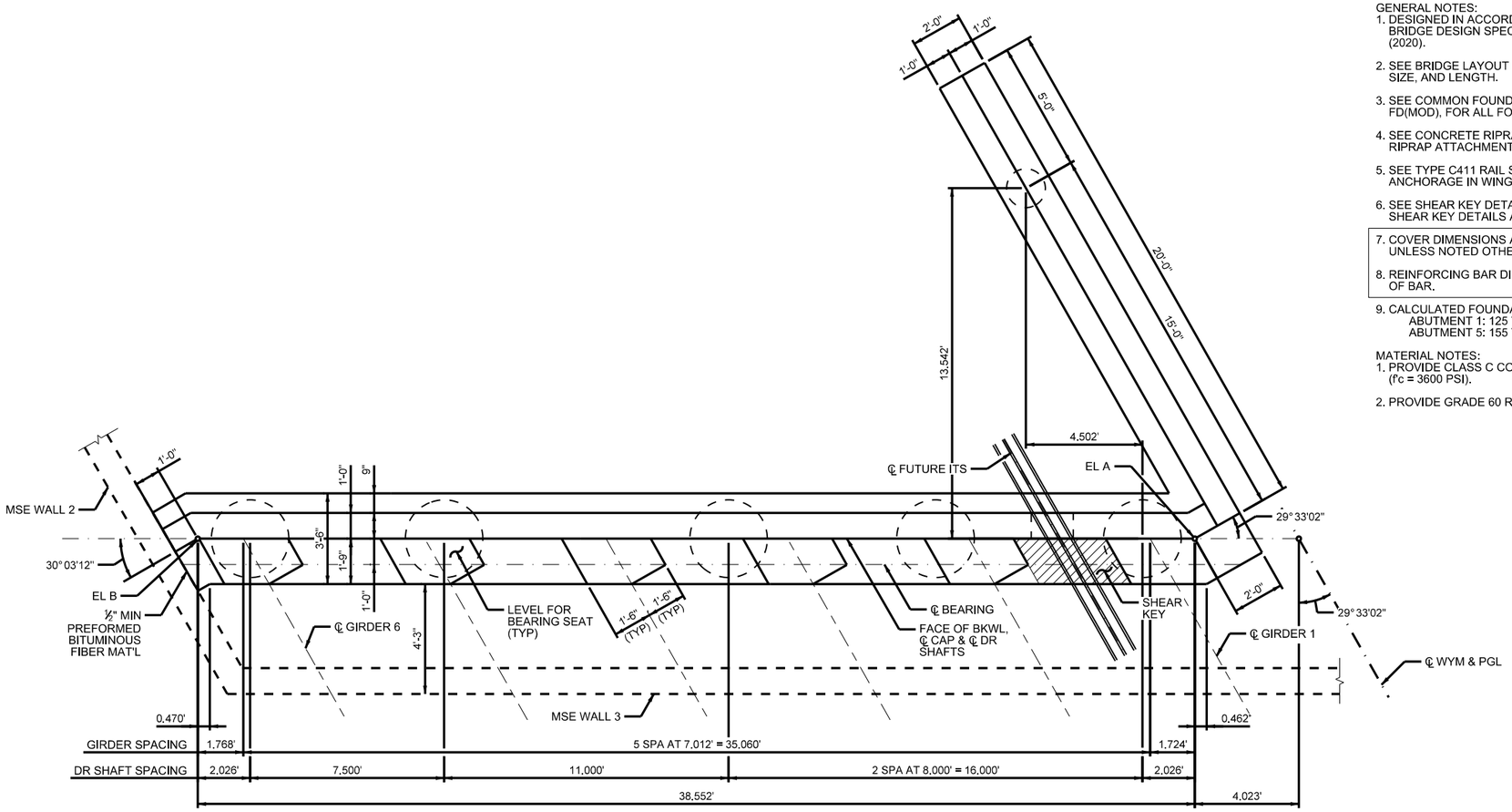

PLAN

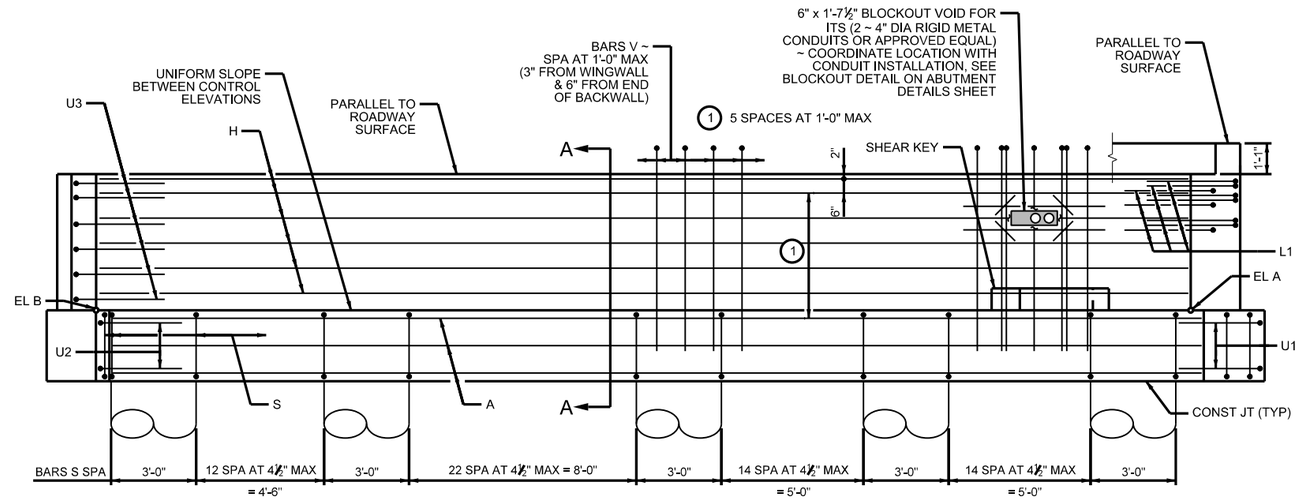

ELEVATION

GENERAL NOTES:
1. DESIGNED IN ACCORDANCE WITH AASHTO LRFD BRIDGE DESIGN SPECIFICATIONS, 9TH EDITION (2020).
2. SEE BRIDGE LAYOUT FOR FOUNDATION TYPE, SIZE, AND LENGTH.
3. SEE COMMON FOUNDATION DETAILS STANDARD, FD(MOD), FOR ALL FOUNDATION DETAILS AND NOTES.
4. SEE CONCRETE RIPRAP (CRR) STANDARD FOR RIPRAP ATTACHMENT DETAILS.
5. SEE TYPE C411 RAIL STANDARD FOR RAIL ANCHORAGE IN WINGWALLS.
6. SEE SHEAR KEY DETAILS STANDARD, IGSK, FOR ALL SHEAR KEY DETAILS AND NOTES.
7. COVER DIMENSIONS ARE CLEAR DIMENSIONS, UNLESS NOTED OTHERWISE.
8. REINFORCING BAR DIMENSIONS ARE OUT-TO-OUT OF BAR.
9. CALCULATED FOUNDATION LOADS:
   ABUTMENT 1: 125 TONS/DR SH.
   ABUTMENT 5: 155 TONS/DR SH.

MATERIAL NOTES:
1. PROVIDE CLASS C CONCRETE STRENGTH (f'c = 3600 PSI).
2. PROVIDE GRADE 60 REINFORCING STEEL.

HL93 LOADING

CONTROL ELEVATIONS

ABUT	EL A	EL B
1	759.96	759.50

WYOMING SPRINGS
SEGMENT 1
ROUND ROCK, TX

ROUND ROCK, TEXAS

AGUIRRE & FIELDS
ENGINEERING INNOVATORS
TBPE FIRM REGISTRATION # 739

Revision No.	Date	Description

STATE OF TEXAS
RYAN J. WILLIAMS
110418
LICENSED
PROFESSIONAL ENGINEER
4/17/2023

100% SUBMITTAL

Project No.:	36179
Issued:	3/30/2023
Drawn By:	QBH
Checked By:	RJW
Scale:	

Sheet Title
NB WYOMING SPRINGS AT BRUSHY CREEK ABUTMENT 1

241
Sheet Number

GENERAL NOTES:
1. SEE ABUTMENT 1 SHEET FOR GENERAL NOTES.

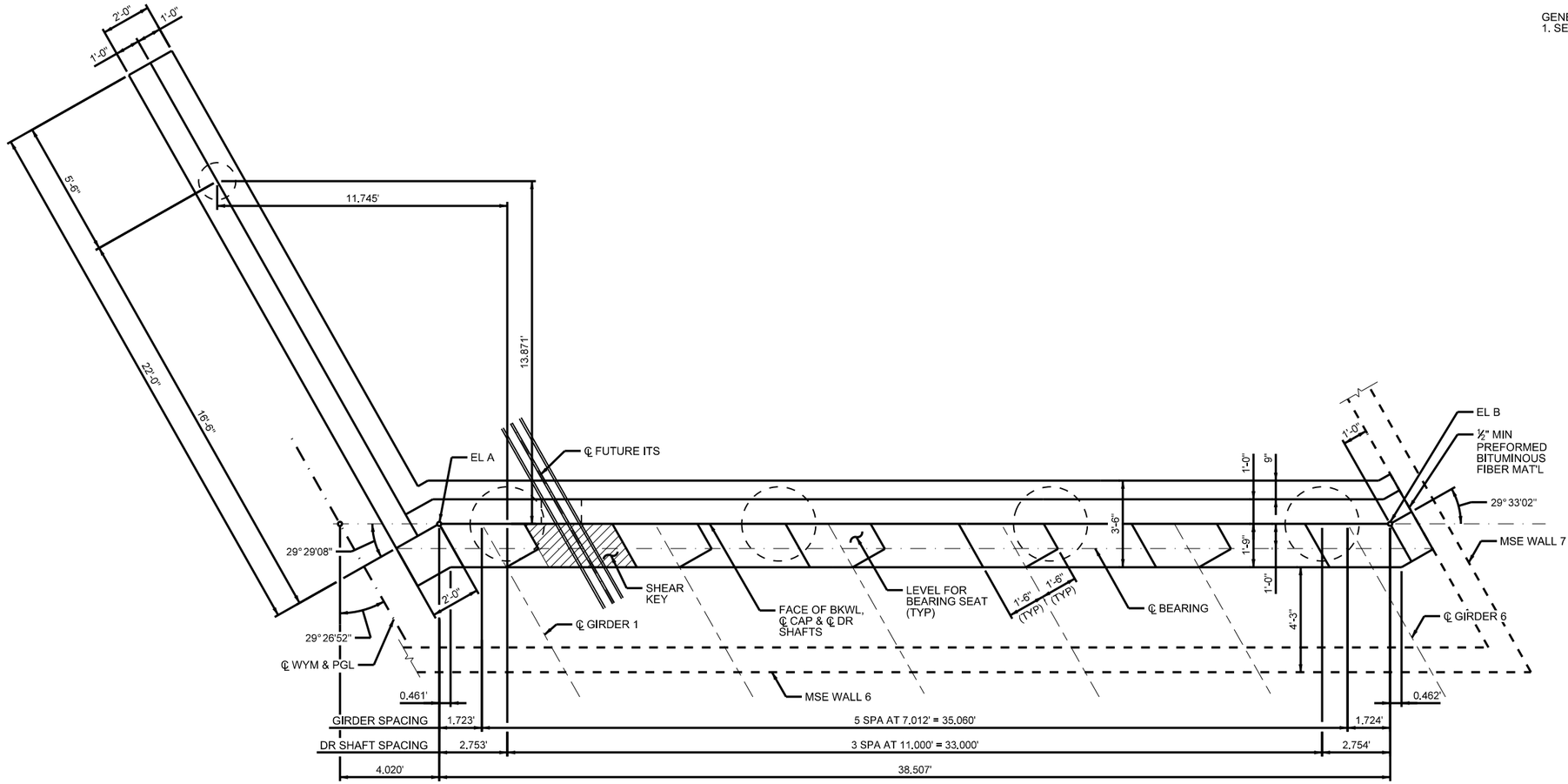

PLAN

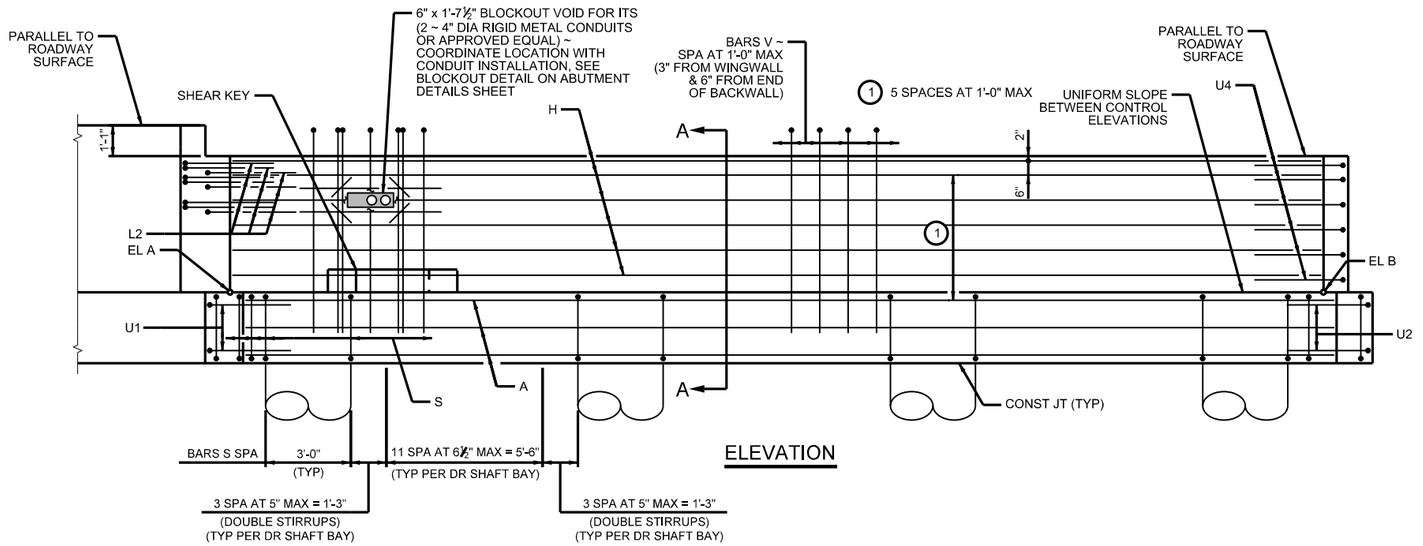

ELEVATION

HL93 LOADING

CONTROL ELEVATIONS

ABUT	EL A	EL B
5	754.82	754.36

WYOMING SPRINGS
SEGMENT 1
ROUND ROCK, TX

ROUND ROCK, TEXAS

AGUIRRE & FIELDS
ENGINEERING INNOVATORS
TBPE FIRM REGISTRATION # 739

Revision No.	Date	Description

STATE OF TEXAS
RYAN J. WILLIAMS
110418
LICENSED
PROFESSIONAL ENGINEER
4/17/2023

100% SUBMITTAL

Project No.:	36179
Issued:	3/30/2023
Drawn By:	QBH
Checked By:	RJW
Scale:	

Sheet Title
NB WYOMING SPRINGS AT BRUSHY CREEK ABUTMENT 5

242
Sheet Number

NORTH OFFICE
NORTH AMERICA
1801 Capital
Round Rock, Texas
Date:
3/30/2023
CITY OF ROUND ROCK
USER: ebluff
6:27:48 PM

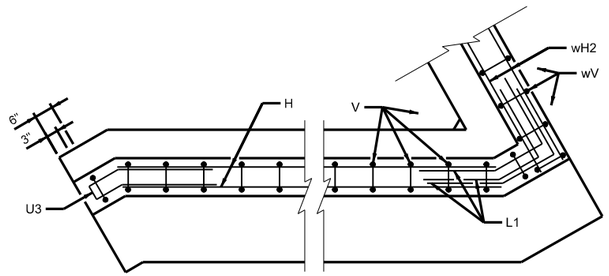

BACKWALL

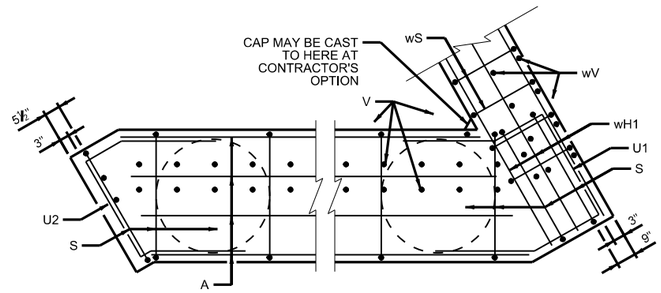

CAP

ABUTMENT 1 CORNER DETAILS

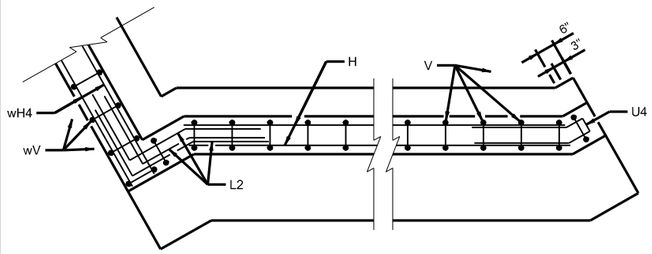

BACKWALL

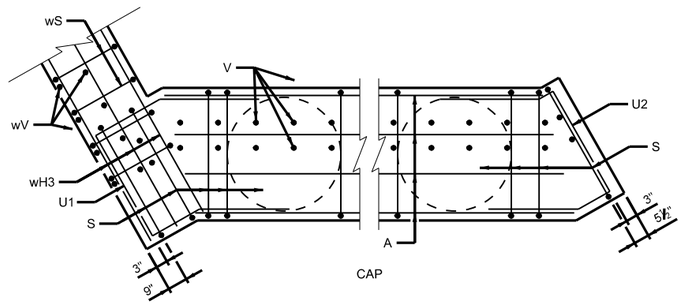

CAP

ABUTMENT 5 CORNER DETAILS

BEARING SEAT DETAIL

(BEARING SURFACE MUST BE CLEAN AND FREE OF ALL LOOSE MATERIAL BEFORE PLACING BEARING PAD.)

WINGWALL ELEVATION

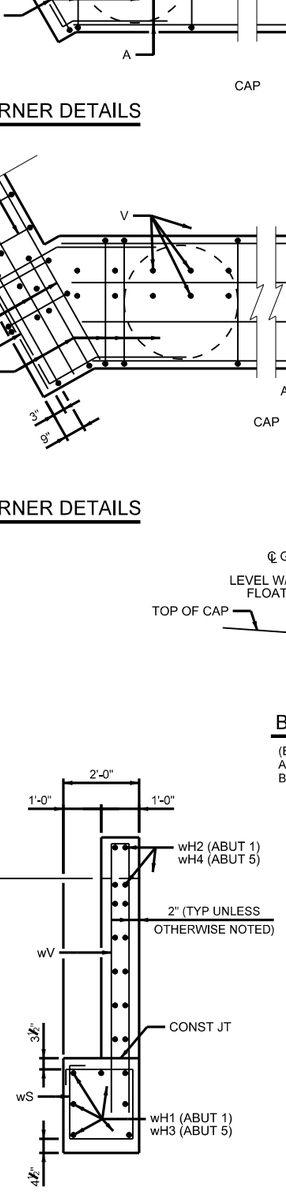

SECTION B-B

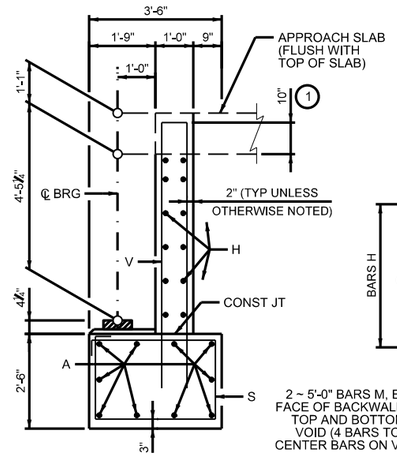

SECTION A-A

GENERAL NOTES:
1. SEE ABUTMENT 1 SHEET FOR GENERAL NOTES.

(1) INCREASE AS REQUIRED TO MAINTAIN 3" FROM FINISHED GRADE

(2) 1" TYP, ¾" MIN CLEARANCE BETWEEN DUCTS

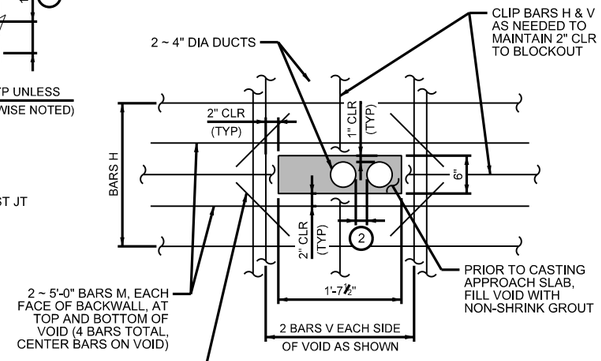

BLOCKOUT DETAIL

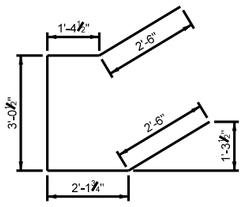

BARS U1

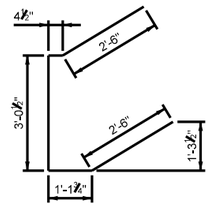

BARS U2

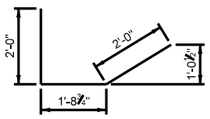

BARS L1

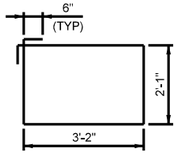

BARS S

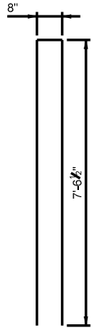

BARS V & wV

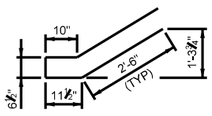

BARS U3

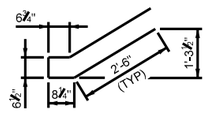

BARS U4

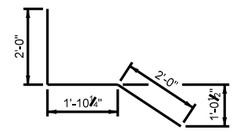

BARS L2

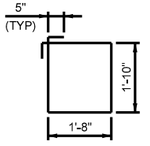

BARS wS

HL93 LOADING

TABLE OF ESTIMATED ABUTMENT 1 QUANTITIES				
BAR	NO	SIZE	LENGTH	WEIGHT
A	10	#11	38'-7"	2,049
H	12	#6	38'-7"	695
L1	9	#6	5'-9"	78
M	4	#5	5'-0"	21
S	71	#5	11'-6"	852
U1	2	#6	11'-7"	35
U2	2	#6	9'-7"	29
U3	6	#6	7'-4"	67
V	42	#5	15'-9"	690
wH1	7	#6	21'-5"	226
wH2	14	#6	19'-8"	414
wS	21	#4	7'-10"	110
wV	21	#5	15'-9"	345
X	8	#5	1'-0"	9
REINFORCING STEEL			LB	5,620
CLASS "C" CONC			CY	28.8

TABLE OF ESTIMATED ABUTMENT 5 QUANTITIES				
BAR	NO	SIZE	LENGTH	WEIGHT
A	10	#11	38'-7"	2,052
H	12	#6	38'-7"	696
L2	9	#6	5'-10"	80
M	4	#5	5'-0"	21
S	85	#5	11'-6"	1,020
U1	2	#6	11'-7"	35
U2	2	#6	9'-7"	29
U4	6	#6	6'-10"	62
V	42	#5	15'-9"	690
wH3	7	#6	23'-5"	247
wH4	14	#6	21'-8"	456
wS	23	#4	7'-10"	121
wV	23	#5	15'-9"	378
X	8	#5	1'-0"	9
REINFORCING STEEL			LB	5,896
CLASS "C" CONC			CY	29.6

WYOMING SPRINGS
SEGMENT 1
ROUND ROCK, TX

ROUND ROCK, TEXAS

AGUIRRE & FIELDS
ENGINEERING INNOVATORS
TBPE FIRM REGISTRATION # 739

Revision No.	Date	Description

STATE OF TEXAS
RYAN J. WILLIAMS
110418
LICENSED
PROFESSIONAL ENGINEER
4/17/2023

100% SUBMITTAL

Project No.:	36179
Issued:	3/30/2023
Drawn By:	QBH
Checked By:	RJW
Scale:	

Sheet Title
NB WYOMING SPRINGS AT BRUSHY CREEK ABUTMENT DETAILS

243
Sheet Number

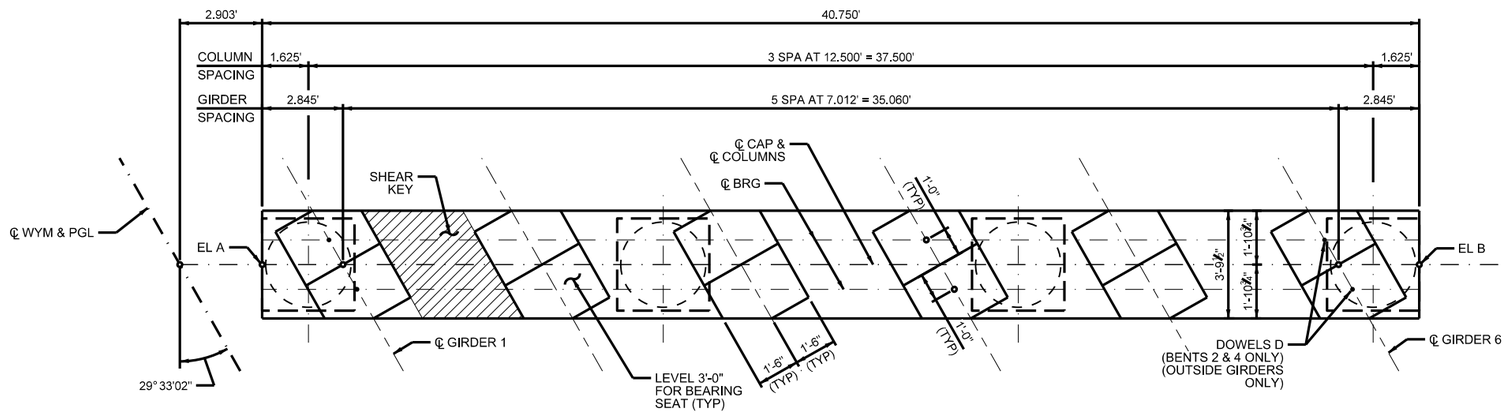

PLAN

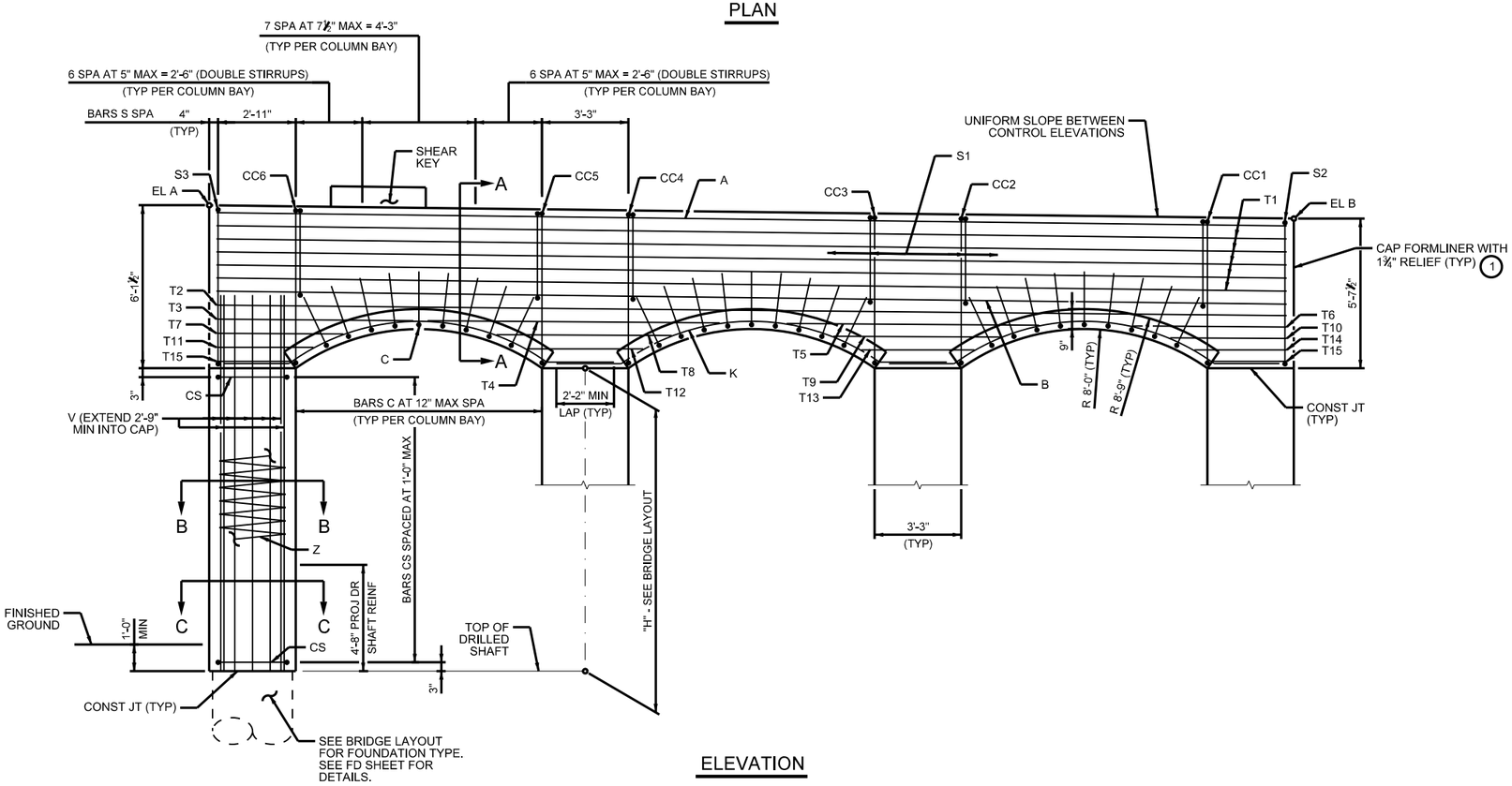

ELEVATION

GENERAL NOTES:
1. DESIGNED IN ACCORDANCE WITH AASHTO LRFD BRIDGE DESIGN SPECIFICATIONS, 9TH EDITION (2020).
2. SEE BRIDGE LAYOUT FOR FOUNDATION TYPE, SIZE, AND LENGTH.
3. SEE COMMON FOUNDATION DETAILS STANDARD, FD(MOD), FOR ALL FOUNDATION DETAILS AND NOTES.
4. SEE SHEAR KEY DETAILS STANDARD, IGSK, FOR ALL SHEAR KEY DETAILS AND NOTES.
5. SEE "AESTHETIC DETAILS" SHEETS FOR AESTHETIC INFORMATION.
6. COVER DIMENSIONS ARE CLEAR DIMENSIONS, UNLESS NOTED OTHERWISE.
7. REINFORCING BAR DIMENSIONS ARE OUT-TO-OUT OF BAR.
8. CALCULATED FOUNDATION LOADS:
   BENT 2: 250 TONS/DR SH.
   BENT 3: 250 TONS/DR SH.
   BENT 4: 245 TONS/DR SH.

MATERIAL NOTES:
1. PROVIDE CLASS C CONCRETE STRENGTH (f'c = 3600 PSI).
2. PROVIDE GRADE 60 REINFORCING STEEL.
3. GALVANIZE DOWEL BARS D.

(1) SEE AESTHETIC DETAILS SHEET.

HL93 LOADING

CONTROL ELEVATIONS

BENT	EL A	EL B
2	758.69	758.19
3	757.39	756.90
4	756.10	755.60

WYOMING SPRINGS
SEGMENT 1
ROUND ROCK, TX

ROUND ROCK, TEXAS

AGUIRRE & FIELDS
ENGINEERING INNOVATORS
TBPE FIRM REGISTRATION # 739

Revision No.	Date	Description

STATE OF TEXAS
RYAN J. WILLIAMS
110418
LICENSED PROFESSIONAL ENGINEER
4/17/2023

100% SUBMITTAL

Project No.:	36179
Issued:	3/30/2023
Drawn By:	QBH
Checked By:	RJW
Scale:	

Sheet Title
NB WYOMING SPRINGS AT BRUSHY CREEK BENTS 2-4

244
Sheet Number

NORTH OFFICE
AUSTIN, TEXAS
10815\Dgn\04
10815-Overall.dgn
DWG
E1.4x1.1
CITY OF ROUND ROCK
USER: rwilliams
6:28:24 PM
3/30/2023

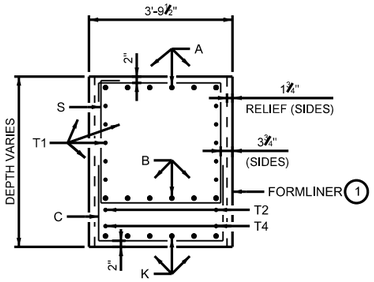

SECTION A-A

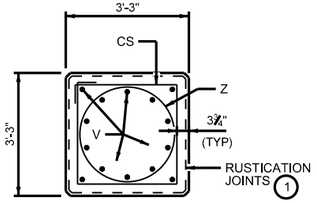

SECTION B-B

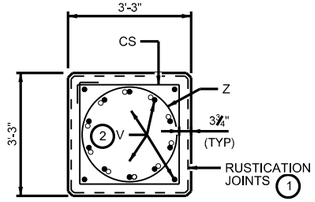

SECTION C-C

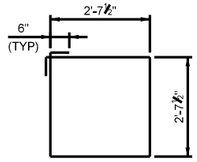

BARS CS

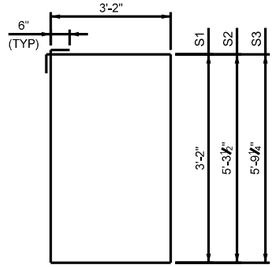

BARS S

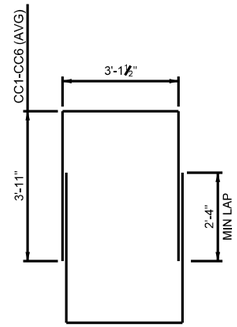

BARS CC

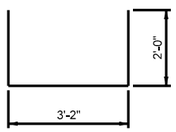

BARS C

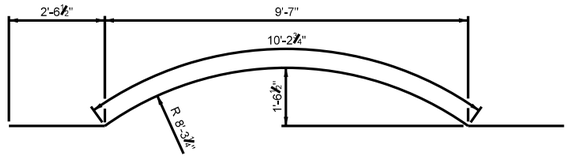

BARS K

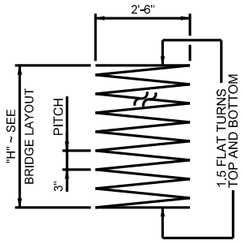

BARS Z

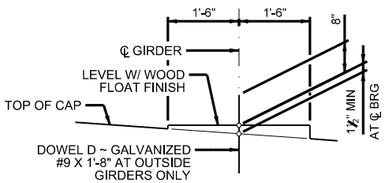

BEARING SEAT DETAIL

(BEARING SURFACE MUST BE CLEAN AND FREE OF ALL LOOSE MATERIAL BEFORE PLACING BEARING PAD.)

TABLE OF ESTIMATED CAP QUANTITIES BENT 2 & 4 (3)

BAR	NO	SIZE	LENGTH	WEIGHT
A	6	#11	40'-2"	1,280
B	6	#11	40'-2"	1,280
C	27	#5	7'-2"	202
D	4	#9	1'-8"	23
K	18	#6	15'-4"	415
S1	102	#5	13'-8"	1,454
S2	1	#5	17'-11"	19
S3	1	#5	18'-11"	20
CC1-CC6 (AVG)	12	#5	11'-0"	138
T1	10	#5	40'-2"	419
T2	2	#5	40'-2"	84
T3	2	#5	7'-4"	16
T4	2	#5	11'-0"	23
T5	2	#5	9'-6"	20
T6	2	#5	5'-9"	12
T7	2	#5	4'-9"	10
T8	2	#5	6'-7"	14
T9	2	#5	6'-3"	14
T10	2	#5	4'-4"	10
T11	2	#5	3'-7"	8
T12	2	#5	4'-4"	10
T13	2	#5	4'-3"	9
T14	2	#5	3'-5"	8
T15	4	#5	2'-9"	12
REINFORCING STEEL			LB	5,500
CLASS "C" CONC (CAP)			CY	30.5

TABLE OF ESTIMATED CAP QUANTITIES BENT 3

BAR	NO	SIZE	LENGTH	WEIGHT
A	6	#11	40'-2"	1,280
B	6	#11	40'-2"	1,280
C	27	#5	7'-2"	202
K	18	#6	15'-4"	415
S1	102	#5	13'-8"	1,454
S2	1	#5	17'-11"	19
S3	1	#5	18'-11"	20
CC1-CC6 (AVG)	12	#5	11'-0"	138
T1	10	#5	40'-2"	419
T2	2	#5	40'-2"	84
T3	2	#5	7'-4"	16
T4	2	#5	11'-0"	23
T5	2	#5	9'-6"	20
T6	2	#5	5'-9"	12
T7	2	#5	4'-9"	10
T8	2	#5	6'-7"	14
T9	2	#5	6'-3"	14
T10	2	#5	4'-4"	10
T11	2	#5	3'-7"	8
T12	2	#5	4'-4"	10
T13	2	#5	4'-3"	9
T14	2	#5	3'-5"	8
T15	4	#5	2'-9"	12
REINFORCING STEEL			LB	5,477
CLASS "C" CONC (CAP)			CY	30.5

TABLE OF ESTIMATED COLUMN QUANTITIES (4)

BENT	"H"	BARS V 56 ~ #11		BARS Z 4 ~ #4		BARS CS #5 AT 1-0" MAX			REINF STEEL	CLASS "C" CONC (COL)
NO.	HEIGHT	LENGTH	WEIGHT	LENGTH	WEIGHT	NO.	LENGTH	WEIGHT	LB	CY
2	17	19'-9"	5,876	557'-11"	1491	72	11'-6"	864	8,231	26.7
3	17	19'-9"	5,876	557'-11"	1491	72	11'-6"	864	8,231	26.7
4	10	12'-9"	3,793	337'-11"	903	44	11'-6"	528	5,224	15.7

GENERAL NOTES:
1. SEE BENTS 2-4 SHEET FOR GENERAL NOTES.

(1) SEE AESTHETIC DETAILS SHEET.

(2) LAP V BARS INSIDE SPIRAL WITH PROJECTED DRILLED SHAFT REINFORCEMENT.

(3) QUANTITIES SHOWN ARE FOR ONE BENT ONLY.

(4) REINFORCEMENT SHOWN IS BASED ON "H" VALUES SHOWN. FOR EACH LINEAR FOOT VARIATION IN COLUMN HEIGHT, MAKE THE FOLLOWING ADJUSTMENTS:
BARS V, ADD/SUBTRACT 1'-0"
BARS Z, ADD/SUBTRACT 31'-5"
BARS CS, ADD/SUBTRACT 4 BARS
REINFORCING STEEL, ADD/SUBTRACT 429 LB
CL C CONC (COL), ADD/SUBTRACT 1.6 CY

HL93 LOADING

WYOMING SPRINGS
SEGMENT 1
ROUND ROCK, TX

ROUND ROCK, TEXAS

AGUIRRE & FIELDS
ENGINEERING INNOVATORS
TBPE FIRM REGISTRATION # 739

Revision No.	Date	Description

STATE OF TEXAS
RYAN J. WILLIAMS
110418
LICENSED
PROFESSIONAL ENGINEER
4/17/2023

100% SUBMITTAL

Project No.:	36179
Issued:	3/30/2023
Drawn By:	QBH
Checked By:	RJW
Scale:	

Sheet Title
NB WYOMING SPRINGS AT BRUSHY CREEK BENT DETAILS

245
Sheet Number

AUSTIN OFFICE
512.451.6655
3/30/2023 6:28:48 PM USER: bwhull CITY OF ROUND ROCK Dwg: DETAILS 1811-Open.dgn

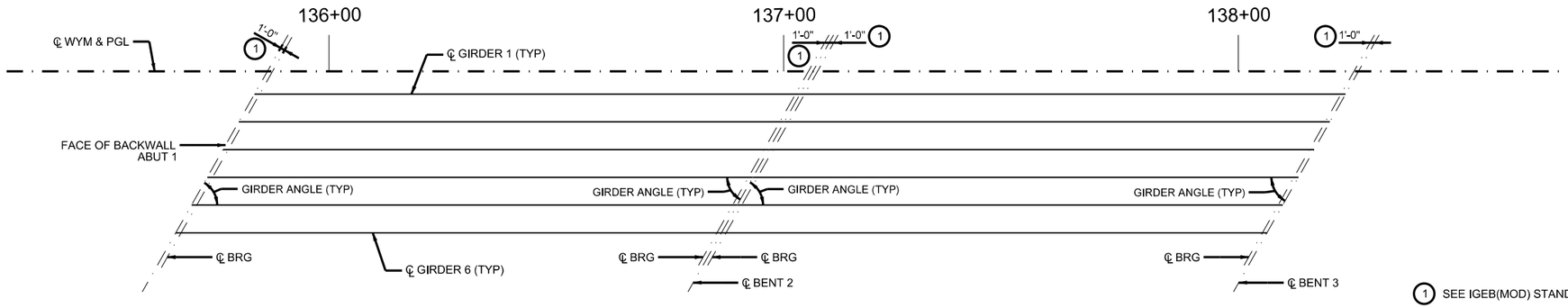

SPAN 1
(Tx54 GIRDERS)

SPAN 2
(Tx54 GIRDERS)

1. SEE IGEB(MOD) STANDARD FOR ORIENTATION OF DIMENSION.
2. GIRDER LENGTHS SHOWN ARE BOTTOM GIRDER FLANGE LENGTHS WITH ADJUSTMENTS MADE FOR GIRDER SLOPE.

BENT REPORT

ABUT NO. 1 (S 84 45 12.05 E)
DISTANCE BETWEEN STATION LINE AND GRDR 1 5.748 R

		GRDR SPAC. (C.L. ABUT)	GRDR ANGLE D	M	S
SPAN 1	GRDR 1	0.000	60	26	57
	GRDR 2	7.012	60	26	57
	GRDR 3	7.012	60	26	57
	GRDR 4	7.012	60	26	58
	GRDR 5	7.012	60	26	58
	GRDR 6	7.012	60	26	58
	TOTAL	35.060			

BENT NO. 2 (S 84 45 12.05 E)
DISTANCE BETWEEN STATION LINE AND GRDR 1 5.748 R

		GRDR SPAC. (C.L. BENT)	GRDR ANGLE D	M	S
SPAN 1	GRDR 1	0.000	60	26	57
	GRDR 2	7.012	60	26	57
	GRDR 3	7.012	60	26	57
	GRDR 4	7.012	60	26	58
	GRDR 5	7.012	60	26	58
	GRDR 6	7.012	60	26	58
	TOTAL	35.060			

BENT NO. 2 (S 84 45 12.05 E)
DISTANCE BETWEEN STATION LINE AND GRDR 1 5.748 R

		GRDR SPAC. (C.L. BENT)	GRDR ANGLE D	M	S
SPAN 2	GRDR 1	0.000	60	26	57
	GRDR 2	7.012	60	26	57
	GRDR 3	7.012	60	26	57
	GRDR 4	7.012	60	26	58
	GRDR 5	7.012	60	26	58
	GRDR 6	7.012	60	26	58
	TOTAL	35.060			

BENT NO. 3 (S 84 45 12.05 E)
DISTANCE BETWEEN STATION LINE AND GRDR 1 5.748 R

		GRDR SPAC. (C.L. BENT)	GRDR ANGLE D	M	S
SPAN 2	GRDR 1	0.000	60	26	57
	GRDR 2	7.012	60	26	57
	GRDR 3	7.012	60	26	57
	GRDR 4	7.012	60	26	58
	GRDR 5	7.012	60	26	58
	GRDR 6	7.012	60	26	58
	TOTAL	35.060			

GIRDER REPORT

GRDR REPORT, SPAN 1

	HORIZONTAL DISTANCE C-C BENT	C-C BRG.	TRUE DISTANCE BOT. BM. FLG.	(2) GRDR SLOPE
GRDR 1	120.000	117.850	119.47	-0.0108
GRDR 2	120.000	117.850	119.47	-0.0108
GRDR 3	120.000	117.850	119.47	-0.0108
GRDR 4	120.000	117.850	119.47	-0.0108
GRDR 5	120.000	117.850	119.47	-0.0108
GRDR 6	120.000	117.850	119.47	-0.0108

GRDR REPORT, SPAN 2

	HORIZONTAL DISTANCE C-C BENT	C-C BRG.	TRUE DISTANCE BOT. BM. FLG.	(2) GRDR SLOPE
GRDR 1	120.000	118.000	119.51	-0.0108
GRDR 2	120.000	118.000	119.51	-0.0108
GRDR 3	120.000	118.000	119.51	-0.0108
GRDR 4	120.000	118.000	119.51	-0.0108
GRDR 5	120.000	118.000	119.51	-0.0108
GRDR 6	120.000	118.000	119.51	-0.0108

HL93 LOADING

WYOMING SPRINGS
SEGMENT 1
ROUND ROCK, TX

ROUND ROCK, TEXAS

AGUIRRE & FIELDS
ENGINEERING INNOVATORS
TBPE FIRM REGISTRATION # 739

Revision No.	Date	Description

STATE OF TEXAS
RYAN J. WILLIAMS
110418
LICENSED
PROFESSIONAL ENGINEER
4/17/2023

100% SUBMITTAL

Project No.:	36179
Issued:	3/30/2023
Drawn By:	QBH
Checked By:	RJW
Scale:	

Sheet Title
NB WYOMING SPRINGS AT BRUSHY CREEK FRAMING PLAN SHEET 01 OF 02

246
Sheet Number

AUSTIN OFFICE
512.451.8037
TBPE FIRM #739
3/30/2023 4:29:04 PM
\\AFI-Data\Projects\36179 - WYOMING SPRINGS\CAD\Sheets\Framing\36179_FRM_GIRDER.dwg
User: DALLAS
USERS default
CITY OF ROUND ROCK

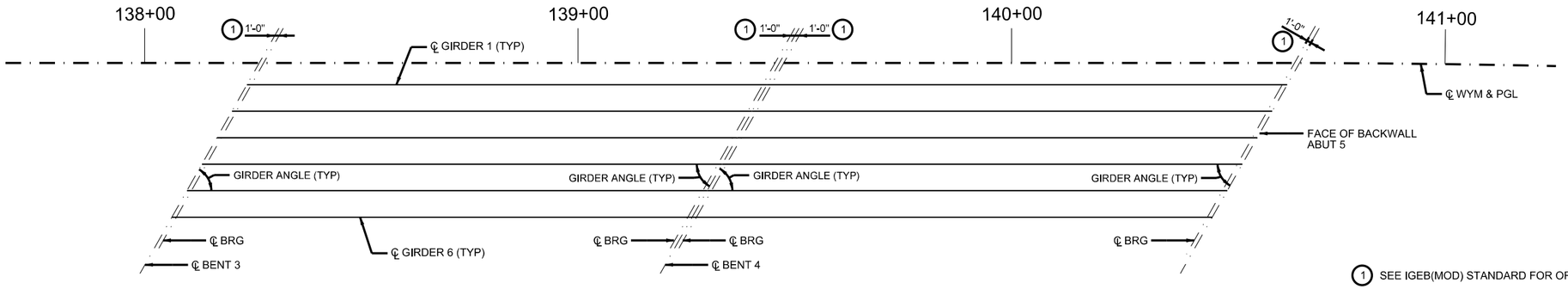

1. SEE IGEB(MOD) STANDARD FOR ORIENTATION OF DIMENSION.
2. GIRDER LENGTHS SHOWN ARE BOTTOM GIRDER FLANGE LENGTHS WITH ADJUSTMENTS MADE FOR GIRDER SLOPE.

SPAN 3
(Tx54 GIRDERS)

SPAN 4
(Tx54 GIRDERS)

BENT REPORT

BENT NO. 3 (S 84 45 12.05 E)
DISTANCE BETWEEN STATION LINE AND GRDR 1 5.748 R

		GRDR SPAC. (C.L. BENT)	GRDR ANGLE D	M	S
SPAN 3	GRDR 1	0.000	60	26	57
	GRDR 2	7.012	60	26	57
	GRDR 3	7.012	60	26	57
	GRDR 4	7.012	60	26	58
	GRDR 5	7.012	60	26	58
	GRDR 6	7.012	60	26	58
	TOTAL	35.060			

BENT NO. 4 (S 84 45 12.05 E)
DISTANCE BETWEEN STATION LINE AND GRDR 1 5.748 R

		GRDR SPAC. (C.L. BENT)	GRDR ANGLE D	M	S
SPAN 3	GRDR 1	0.000	60	26	57
	GRDR 2	7.012	60	26	57
	GRDR 3	7.012	60	26	57
	GRDR 4	7.012	60	26	58
	GRDR 5	7.012	60	26	58
	GRDR 6	7.012	60	26	58
	TOTAL	35.060			

BENT NO. 4 (S 84 45 12.05 E)
DISTANCE BETWEEN STATION LINE AND GRDR 1 5.748 R

		GRDR SPAC. (C.L. BENT)	GRDR ANGLE D	M	S
SPAN 4	GRDR 1	0.000	60	26	59
	GRDR 2	7.012	60	26	59
	GRDR 3	7.012	60	26	59
	GRDR 4	7.012	60	26	58
	GRDR 5	7.012	60	26	58
	GRDR 6	7.012	60	26	58
	TOTAL	35.060			

ABUT NO. 5 (S 84 45 12.05 E)
DISTANCE BETWEEN STATION LINE AND GRDR 1 5.743 R

		GRDR SPAC. (C.L. ABUT)	GRDR ANGLE D	M	S
SPAN 4	GRDR 1	0.000	60	26	59
	GRDR 2	7.012	60	26	59
	GRDR 3	7.012	60	26	59
	GRDR 4	7.012	60	26	58
	GRDR 5	7.012	60	26	58
	GRDR 6	7.012	60	26	58
	TOTAL	35.060			

GIRDER REPORT

GRDR REPORT, SPAN 3

	HORIZONTAL DISTANCE C-C BENT	C-C BRG.	TRUE DISTANCE BOT. BM. FLG.	(2) GRDR SLOPE
GRDR 1	120.000	118.000	119.51	-0.0108
GRDR 2	120.000	118.000	119.51	-0.0108
GRDR 3	120.000	118.000	119.51	-0.0108
GRDR 4	120.000	118.000	119.51	-0.0108
GRDR 5	120.000	118.000	119.51	-0.0108
GRDR 6	120.000	118.000	119.51	-0.0108

GRDR REPORT, SPAN 4

	HORIZONTAL DISTANCE C-C BENT	C-C BRG.	TRUE DISTANCE BOT. BM. FLG.	(2) GRDR SLOPE
GRDR 1	120.002	117.853	119.47	-0.0108
GRDR 2	120.002	117.853	119.47	-0.0108
GRDR 3	120.002	117.853	119.47	-0.0108
GRDR 4	120.002	117.853	119.47	-0.0108
GRDR 5	120.003	117.853	119.47	-0.0108
GRDR 6	120.003	117.853	119.47	-0.0108

HL93 LOADING

WYOMING SPRINGS
SEGMENT 1
ROUND ROCK, TX

ROUND ROCK, TEXAS

AGUIRRE & FIELDS
ENGINEERING INNOVATORS
TBPE FIRM REGISTRATION # 739

Revision No.	Date	Description

STATE OF TEXAS
RYAN J. WILLIAMS
110418
LICENSED
PROFESSIONAL ENGINEER
4/17/2023

100% SUBMITTAL

Project No.:	36179
Issued:	3/30/2023
Drawn By:	QBH
Checked By:	RJW
Scale:	

Sheet Title
NB WYOMING SPRINGS AT BRUSHY CREEK FRAMING PLAN SHEET 02 OF 02

247
Sheet Number

AUSTIN OFFICE
AUSTIN, TEXAS
\\ATX-Data\Projects\36179 - City of Round Rock - Wyoming Springs\Drawings\Framing\NB Wyoming Springs at Brushy Creek Framing Plan Sheet 02 of 02.dwg
Date: 3/30/2023 6:29:23 PM
User: BHall
CITY OF ROUND ROCK

TABLE OF DEAD LOAD DEFLECTIONS

SPAN NO.	GIRDER NO.	"A" FT	"B" FT
1	1 & 6	0.118	0.168
	2 - 5	0.110	0.156
2	1 & 6	0.119	0.169
	2 - 5	0.111	0.157

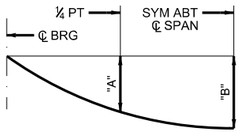

DEAD LOAD DEFLECTION DIAGRAM

NOTE: DEFLECTIONS SHOWN ARE DUE TO PRESTRESSED CONCRETE PANELS AND CAST-IN-PLACE SLAB ONLY. (Ec = 5000 KSI) ADJUST DEFLECTIONS BASED ON FIELD OBSERVATIONS AS NEEDED.

GENERAL NOTES:
1. DESIGNED IN ACCORDANCE WITH AASHTO LRFD BRIDGE DESIGN SPECIFICATIONS, 9TH EDITION (2020).
2. SEE STANDARDS PCP AND PCP-FAB FOR PANEL DETAILS NOT SHOWN.
3. SEE STANDARD IGTS FOR THICKENED SLAB END DETAILS.
4. SEE STANDARD IGMS FOR MISCELLANEOUS DETAILS.
5. SEE STANDARD SEJ-M FOR SEALED EXPANSION JOINT DETAILS.
6. SEE STANDARD BRSM FOR ADDITIONAL DETAILS AT SIDEWALKS.
7. SEE STANDARD BS-EJCP FOR SIDEWALK COVER PLATE DETAILS.
8. SEE STANDARD BL FOR BRIDGE LIGHTING DETAILS.
9. SEE APPLICABLE RAIL DETAILS FOR RAIL ANCHORAGE IN SLAB.
10. SEE "AESTHETIC DETAILS" SHEETS FOR AESTHETIC INFORMATION.
11. COVER DIMENSIONS ARE CLEAR DIMENSIONS UNLESS NOTED OTHERWISE.

MATERIAL NOTES:
1. PROVIDE CLASS S CONCRETE (f'c = 4000 PSI).
2. PROVIDE GRADE 60 REINFORCING STEEL.
3. PROVIDE BAR LAPS, WHERE REQUIRED, AS FOLLOWS: UNCOATED ~ #4 = 1'-7"
4. DEFORMED WELDED WIRE REINFORCEMENT (WWR)(ASTM A1064) OF EQUAL SIZE AND SPACING MAY BE SUBSTITUTED FOR BARS A, AA, D, OA, P, OR T UNLESS NOTED OTHERWISE.

(1) CONDUIT FOR ILLUMINATION POLE BRACKET SHALL BE PLACED PRIOR TO REINFORCED CONCRETE SLAB POUR.

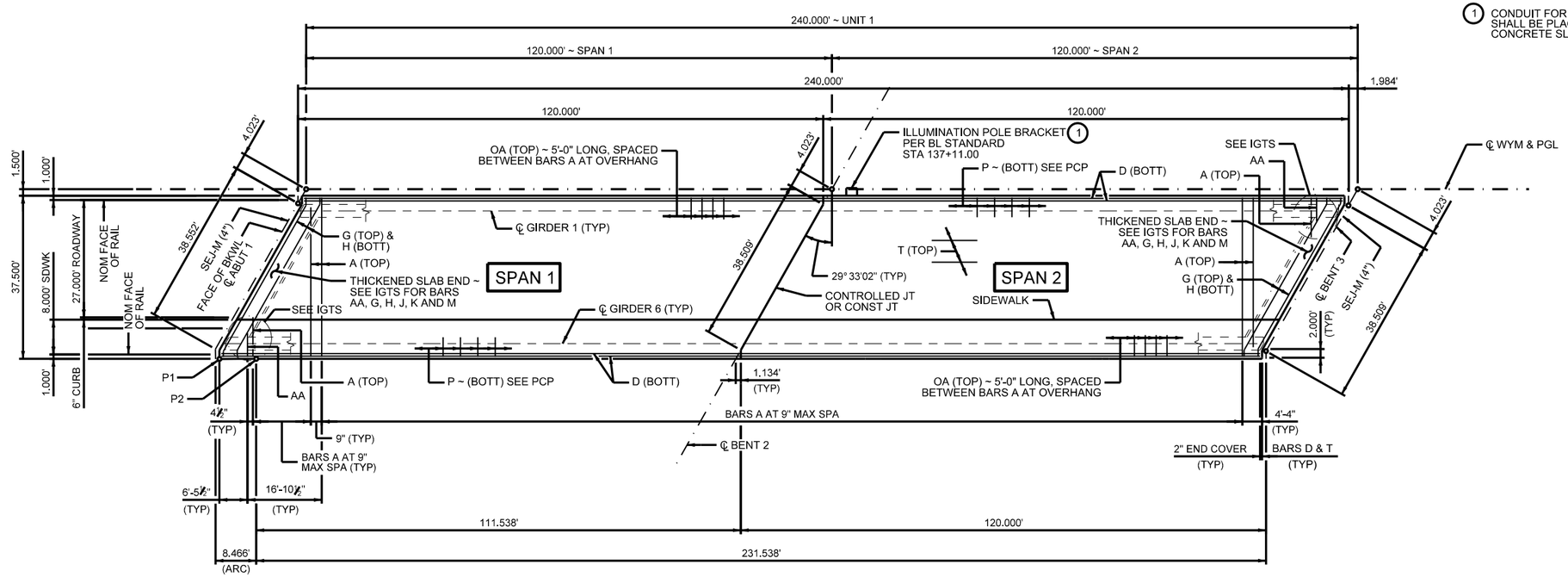

PLAN

BRIDGE DECK EDGE TRANSITION TABLE

LOCATION	STATION	OFFSET
P1	135+65.46	39.04'
P2	135+73.93	39.00'

HL93 LOADING

WYOMING SPRINGS
SEGMENT 1
ROUND ROCK, TX

AGUIRRE & FIELDS
ENGINEERING INNOVATORS
TBPE FIRM REGISTRATION # 739

Revision No.	Date	Description

STATE OF TEXAS
RYAN J. WILLIAMS
110418
LICENSED
PROFESSIONAL ENGINEER
4/17/2023

100% SUBMITTAL

Project No.:	36179
Issued:	3/30/2023
Drawn By:	QBH
Checked By:	RJW
Scale:	

Sheet Title
NB WYOMING SPRINGS AT BRUSHY CREEK 240.00' PCGU 1 SHEET 01 OF 02

248
Sheet Number

AUSTIN OFFICE 8500 BLUFFSTONE AUSTIN, TEXAS 78759
1815-Open.dgn
USER:JWilliams
CITY OF ROUND ROCK
USER: JWilliams
4:23:43 PM
3/30/2023

TABLE OF SECTION DEPTHS

SPAN NO.	GIRDER NO.	"X" AT ℄ BRG (2)	"Y" AT ℄ BRG	"Z" AT ℄ SPAN (3)
1	1	1'-0 1/4"	5'-6 1/4"	10 1/2"
	2 & 3			10 5/8"
	4 & 5			9 1/2"
	6			9 5/8"
2	1	1'-0 1/4"	5'-6 1/4"	10 1/2"
	2 & 3			10 5/8"
	4 & 5			9 1/2"
	6			9 5/8"

TABLE OF ESTIMATED QUANTITIES

SPAN	REINF CONCRETE SLAB	REINF STEEL CONC SLAB (4)	BRIDGE SIDEWALK	REINF STEEL SIDEWALK (5)	PRESTR CONC GIRDERS (Tx54) (6)	TOTAL REINF STEEL
	SF	LB	SF	LB	LF	LB
1	4,500	10,350	1,140	2,508	716.82	12,858
2	4,500	10,350	1,140	2,508	717.06	12,858
TOTAL	9,000	20,700	2,280	5,016	1,433.88	25,716

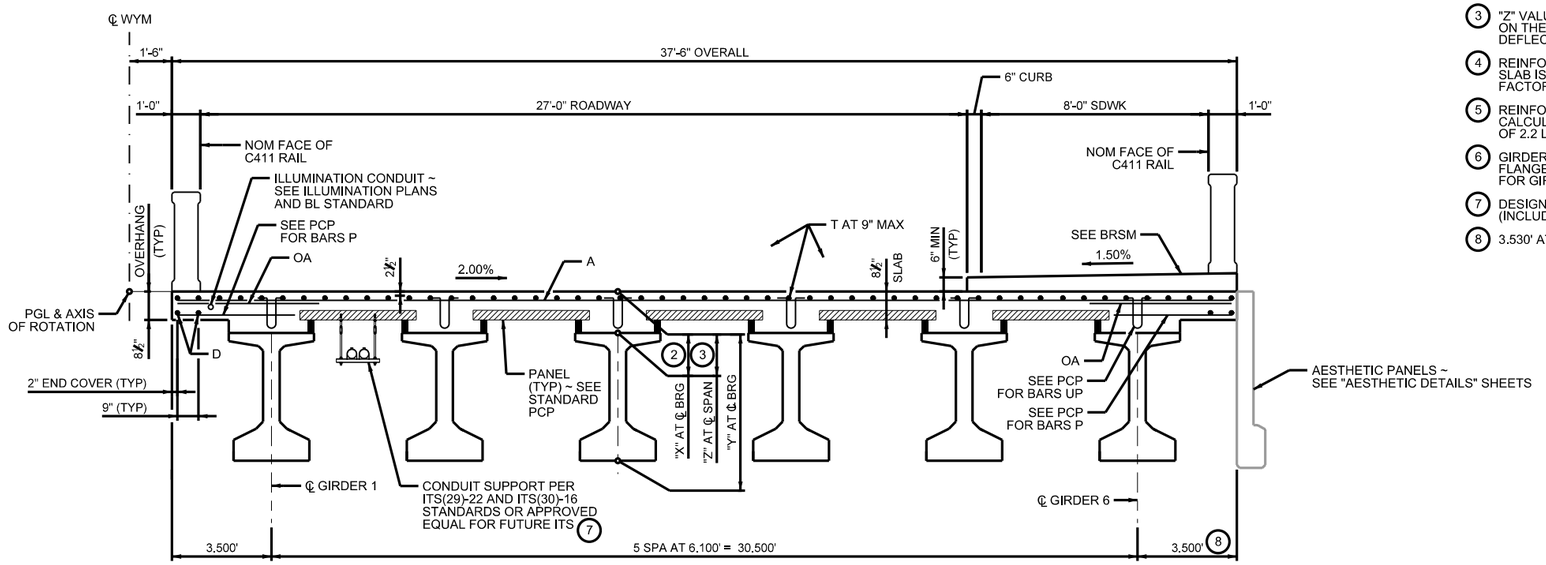

TYPICAL TRANSVERSE SECTION

GENERAL NOTES:
1. SEE SHEET 01 OF 02 FOR GENERAL NOTES.

(2) SEE STANDARD PCP FOR HAUNCH REINFORCING DETAIL.

(3) "Z" VALUE SHOWN IS AN APPROXIMATION BASED ON THEORETICAL GIRDER CAMBER, DEAD LOAD DEFLECTION, AND ROADWAY PROFILE.

(4) REINFORCING STEEL WEIGHT FOR CONCRETE SLAB IS CALCULATED USING AN APPROXIMATE FACTOR OF 2.3 LBS PER SQ FT.

(5) REINFORCING STEEL FOR SIDEWALK IS CALCULATED USING AN APPROXIMATE FACTOR OF 2.2 LBS PER SQ FT.

(6) GIRDER LENGTHS SHOWN ARE BOTTOM GIRDER FLANGE LENGTHS WITH ADJUSTMENTS MADE FOR GIRDER SLOPE.

(7) DESIGNED FOR A MAXIMUM LOAD OF 50 LB/FT (INCLUDES CONDUITS AND HANGERS).

(8) 3.530' AT ℄ ABUTMENT 1.

BAR TABLE

BAR	SIZE
A	#4
AA	#5
D	#4
G	#4
H	#4
J	#4
K	#4
M	#4
OA	#5
P	#4
T	#4
UP	#4

HL93 LOADING

WYOMING SPRINGS
SEGMENT 1
ROUND ROCK, TX

ROUND ROCK, TEXAS

AGUIRRE & FIELDS
ENGINEERING INNOVATORS
TBPE FIRM REGISTRATION # 739

Revision No.	Date	Description

STATE OF TEXAS
RYAN J. WILLIAMS
110418
LICENSED
PROFESSIONAL ENGINEER
4/17/2023

100% SUBMITTAL

Project No.:	36179
Issued:	3/30/2023
Drawn By:	QBH
Checked By:	RJW
Scale:	

Sheet Title
NB WYOMING SPRINGS
AT BRUSHY CREEK
240.00' PCGU 1
SHEET 02 OF 02

249
Sheet Number

NORTH OFFICE
1905 Aldrich
Austin, TX 78723
3/30/2023 4:23:09 PM
USER: Jessica B
Sheet1
CITY OF ROUND ROCK

TABLE OF DEAD LOAD DEFLECTIONS

SPAN NO.	GIRDER NO.	"A"	"B"
		FT	FT
3	1 & 6	0.119	0.169
	2 - 5	0.111	0.157
4	1 & 6	0.118	0.168
	2 - 5	0.110	0.156

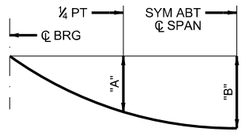

DEAD LOAD DEFLECTION DIAGRAM

NOTE: DEFLECTIONS SHOWN ARE DUE TO PRESTRESSED CONCRETE PANELS AND CAST-IN-PLACE SLAB ONLY. (Ec = 5000 KSI) ADJUST DEFLECTIONS BASED ON FIELD OBSERVATIONS AS NEEDED.

GENERAL NOTES:
1. DESIGNED IN ACCORDANCE WITH AASHTO LRFD BRIDGE DESIGN SPECIFICATIONS, 9TH EDITION (2020).
2. SEE STANDARDS PCP AND PCP-FAB FOR PANEL DETAILS NOT SHOWN.
3. SEE STANDARD IGTS FOR THICKENED SLAB END DETAILS.
4. SEE STANDARD IGMS FOR MISCELLANEOUS DETAILS.
5. SEE STANDARD SEJ-M FOR SEALED EXPANSION JOINT DETAILS.
6. SEE STANDARD BRSM FOR ADDITIONAL DETAILS AT SIDEWALKS.
7. SEE STANDARD BS-EJCP FOR SIDEWALK COVER PLATE DETAILS.
8. SEE STANDARD BL FOR BRIDGE LIGHTING DETAILS.
9. SEE APPLICABLE RAIL DETAILS FOR RAIL ANCHORAGE IN SLAB.
10. SEE "AESTHETIC DETAILS" SHEETS FOR AESTHETIC INFORMATION.
11. COVER DIMENSIONS ARE CLEAR DIMENSIONS UNLESS NOTED OTHERWISE.

MATERIAL NOTES:
1. PROVIDE CLASS S CONCRETE (f'c = 4000 PSI).
2. PROVIDE GRADE 60 REINFORCING STEEL.
3. PROVIDE BAR LAPS, WHERE REQUIRED, AS FOLLOWS: UNCOATED ~ #4 = 1'-7"
4. DEFORMED WELDED WIRE REINFORCEMENT (WWR)(ASTM A1064) OF EQUAL SIZE AND SPACING MAY BE SUBSTITUTED FOR BARS A, AA, D, OA, P, OR T UNLESS NOTED OTHERWISE.

(1) CONDUIT FOR ILLUMINATION POLE BRACKET SHALL BE PLACED PRIOR TO REINFORCED CONCRETE SLAB POUR.

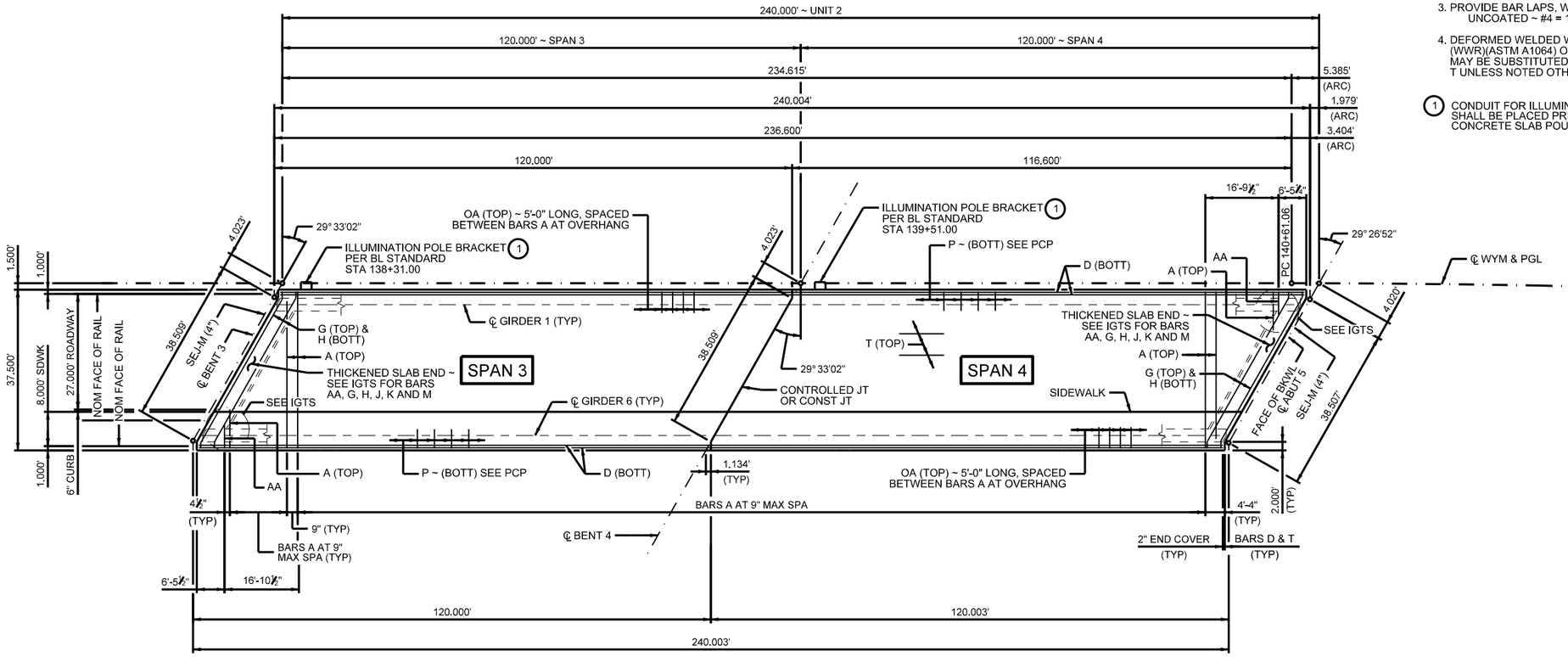

PLAN

HL93 LOADING

WYOMING SPRINGS
SEGMENT 1
ROUND ROCK, TX

AGUIRRE & FIELDS
ENGINEERING INNOVATORS
TBPE FIRM REGISTRATION # 739

Revision No.	Date	Description

STATE OF TEXAS
RYAN J. WILLIAMS
110418
LICENSED
PROFESSIONAL ENGINEER
4/17/2023

100% SUBMITTAL

Project No.:	36179
Issued:	3/30/2023
Drawn By:	QBH
Checked By:	RJW
Scale:	

Sheet Title
NB WYOMING SPRINGS
AT BRUSHY CREEK
240.00' PCGU 2
SHEET 01 OF 02

250
Sheet Number

TABLE OF SECTION DEPTHS

SPAN NO.	GIRDER NO.	"X" AT ℄ BRG (2)	"Y" AT ℄ BRG	"Z" AT ℄ SPAN (3)
3	1	1'-0 1/4"	5'-6 1/4"	10 1/2"
	2 & 3			10 5/8"
	4 & 5			9 1/2"
	6			9 5/8"
4	1	1'-0 1/4"	5'-6 1/4"	10 1/2"
	2 & 3			10 5/8"
	4 & 5			9 1/2"
	6			9 5/8"

TABLE OF ESTIMATED QUANTITIES

SPAN	REINF CONCRETE SLAB	REINF STEEL CONC SLAB (4)	BRIDGE SIDEWALK	REINF STEEL SIDEWALK (5)	PRESTR CONC GIRDERS (Tx54) (6)	TOTAL REINF STEEL
	SF	LB	SF	LB	LF	LB
3	4,500	10,350	1,140	2,508	717.06	12,858
4	4,500	10,350	1,140	2,508	716.82	12,858
TOTAL	9,000	20,700	2,280	5,016	1,433.88	25,716

GENERAL NOTES:
1. SEE SHEET 01 OF 02 FOR GENERAL NOTES.

(2) SEE STANDARD PCP FOR HAUNCH REINFORCING DETAIL.

(3) "Z" VALUE SHOWN IS AN APPROXIMATION BASED ON THEORETICAL GIRDER CAMBER, DEAD LOAD DEFLECTION, AND ROADWAY PROFILE.

(4) REINFORCING STEEL WEIGHT FOR CONCRETE SLAB IS CALCULATED USING AN APPROXIMATE FACTOR OF 2.3 LBS PER SQ FT.

(5) REINFORCING STEEL FOR SIDEWALK IS CALCULATED USING AN APPROXIMATE FACTOR OF 2.2 LBS PER SQ FT.

(6) GIRDER LENGTHS SHOWN ARE BOTTOM GIRDER FLANGE LENGTHS WITH ADJUSTMENTS MADE FOR GIRDER SLOPE.

(7) DESIGNED FOR A MAXIMUM LOAD OF 50 LB/FT (INCLUDES CONDUITS AND HANGERS).

BAR TABLE

BAR	SIZE
A	#4
AA	#5
D	#4
G	#4
H	#4
J	#4
K	#4
M	#4
OA	#5
P	#4
T	#4
UP	#4

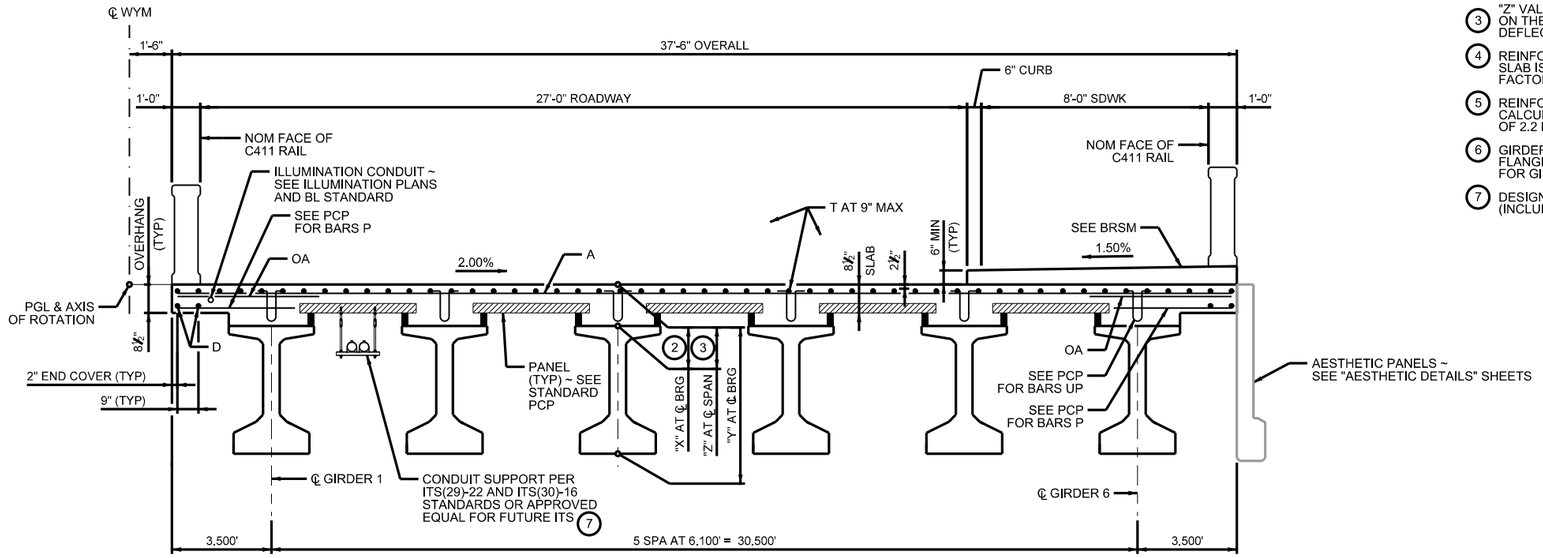

TYPICAL TRANSVERSE SECTION

HL93 LOADING

WYOMING SPRINGS
SEGMENT 1
ROUND ROCK, TX

ROUND ROCK, TEXAS

AGUIRRE & FIELDS
ENGINEERING INNOVATORS
TBPE FIRM REGISTRATION # 739

Revision		
No.	Date	Description

STATE OF TEXAS
RYAN J. WILLIAMS
110418
LICENSED
PROFESSIONAL ENGINEER
4/17/2023

100% SUBMITTAL

Project No.:	36179
Issued:	3/30/2023
Drawn By:	QBH
Checked By:	RJW
Scale:	

Sheet Title
NB WYOMING SPRINGS AT BRUSHY CREEK
240.00' PCGU 2
SHEET 02 OF 02

251
Sheet Number

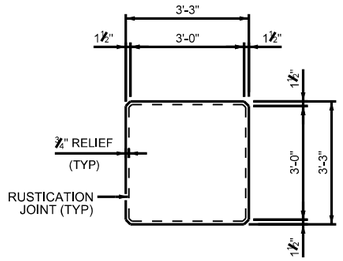

SECTION B-B

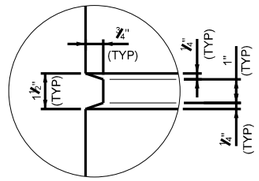

RUSTICATION JOINT DETAIL

RAIL NOTES:

1. PROVIDE TYPE A WINDOWS FOR C411 RAIL ON BRIDGE AND RETAINING WALLS.
2. FOLLOW GUIDANCE ON STANDARD C411 FOR NUMBER OF SPAN PILASTERS AND WINDOW PLACEMENT. CONTINUE PLACEMENT OF TYPE A WINDOWS BEYOND THE ABUTMENT PILASTERS AND TERMINATE RAIL AT RETAINING WALL ENDS WITH A BENT PILASTER. PLACE ABUTMENT PILASTERS ON WINGWALLS. NO METAL BEAM GUARD FENCE IS REQUIRED AT RAIL ENDS.
3. PROVIDE 1" INSET STAR IN PLACE OF BRONZE STAR AT INSIDE FACE OF ABUTMENT PILASTERS. MATCH STAR DIMENSIONS ON STANDARD C411.
4. INCLUDE CONSTRUCTION YEAR AT INSIDE FACE OF ABUTMENT PILASTERS AS SHOWN ON STANDARD C411.

MATERIAL NOTES:

1. PROVIDE CLASS H CONCRETE STRENGTH (f'c = 4,000 PSI) FOR PRECAST PANELS.
2. PROVIDE GRADE 60 REINFORCING STEEL.
3. ALL SURFACES SHALL RECEIVE A SURFACE AREA I, CLASS C FINISH IN ACCORDANCE WITH TXDOT ITEM 427 EXCEPT WHERE FORM LINER IS SPECIFIED.
4. ALL EXPOSED SURFACES SHALL RECEIVE ANTI-GRAFFITI COATING IN ACCORDANCE WITH TXDOT ITEM 740 GRAFFITI REMOVAL AND ANTI-GRAFFITI COATING, USING A TYPE II SACRIFICIAL MATERIAL THAT IS CLEAR (I.E., TRANSPARENT) AND MEETS REQUIRMENTS OF TXDOT DMS-8111. THE MAP OF TEXAS SHOWN ON RW(MSE)(MOD) STANDARD WILL NOT BE REQUIRED.
5. PAYMENT FOR COATINGS WILL NOT BE MADE DIRECTLY BUT SHALL BE CONSIDERED SUBSIDIARY TO TXDOT ITEM 427 SURFACE FINISHES FOR CONCRETE.
6. PAYMENT FOR AESTHETIC DETAILS AND FORM LINERS WILL NOT BE MADE DIRECTLY BUT SHALL BE CONSIDERED SUBSIDIARY TO TXDOT ITEM 420 CONCRETE STRUCTURES OR TXDOT ITEM 423 RETAINING WALL.

FORM LINER NOTES:

1. ELASTOMERIC FORM LINER SHALL BE:

   SCOTT SYSTEM, INC.
   #167 "ASHLAR STONE"
   OR
   CUSTOM ROCK INTERNATIONAL
   #1103 "RUSTIC ASHLAR"

2. HIGH RELIEF SYSTEM INSTALLED PER MANUFACTURER RECOMMENDATIONS.
3. THE FORM LINER IS INTENDED TO SIMULATE HAND-LAYERED IRREGULAR STONE BLOCKS. THE PATTERN USED SHALL BE AS DETAILED OR AS APPROVED BY THE CITY OF ROUND ROCK.
4. PATTERN RELIEF SHALL PROVIDE 1½" OVERALL RELIEF INCLUDING TEXTURED, INDIVIDUAL STONE SURFACES AND JOINTS.
5. STONE SIZES SHALL VARY FROM 8" TO 30".
6. PROVIDE FORM LINER FINISH WHERE SHOWN ON BENT CAPS, COVER PANEL FACES, ARCH PANEL FACES AND MSE WALL PANEL FACES.
7. FORM LINER SHALL NOT BE PLACED CONTINUOUSLY ACROSS ARCH PANEL JOINTS.
8. NO FORM LINER PANEL JOINTS SHALL BE PERMITTED ON MSE WALL PANELS. SLIP JOINTS WILL BE PERMITTED WHERE SHOWN IN THE PLANS.
9. PROVIDE 2" REVEALS VERTICALLY AT 6' ON FORM LINER APPLICATION.
10. PROVIDE SURFACE PREPARATION AND OPAQUE WATERPROOFING TO ALL CONCRETE STRUCTURE SURFACES.

CITY OF ROUND ROCK LOGO NOTES:

1. THE CITY OF ROUND ROCK LOGO SHALL BE FORMED INTO A WALL PANEL NEXT TO EACH BRIDGE ABUTMENT. THE EXACT LOCATION OF EACH LOGO SHALL BE APPROVED BY THE ENGINEER. THE COST OF FORMING THE LOGO WILL NOT BE PAID FOR DIRECTLY, BUT SHALL BE INCIDENTAL TO THE TXDOT ITEM 423 "RETAINING WALL". THE LOGO SHALL BE NO SMALLER THAN 3'-2" AS MEASURED ALONG THE LENGTH OF ANY BRUSH STROKE.
2. BRUSH STROKES SHALL BE INSET 1" USING A CUSTOM ELASTOMERIC FORM LINER. THE CITY WILL PROVIDE A DIGITAL IMAGE FILE TO BE USED FOR FORM LINER FABRICATION. PAINT EACH BRUSH STROKE AS DESCRIBED UNDER COLOR NOTES.

COLOR NOTES:

1. PROVIDE COLOR SAMPLES FOR CITY APPROVAL OF MINIMUM 3' x 3' SIZE BASED ON CONTROL SAMPLE:
   1 (R:230, G:230, B:210) - PARTIAL RETAINING WALL, BENT CAP, & AESTHETIC PANEL FORMLINER.
   2 (R:230, G:220, B:175) - BRIDGE SLAB/SUP EDGE, MSE WALL COPING, BENT COLUMN, BENT CAP ARCH COPING, AESTHETIC PANEL COPING, CONCRETE TRAFFIC RAIL, PARTIAL RETAINING WALL, BENT CAP, & AESTHETIC PANEL FORMLINER.
   3 (R:225, G:200, B:115) - PARTIAL RETAINING WALL, BENT CAP, & AESTHETIC PANEL FORMLINER,
   4 (R:170, G:160, B:130) - BEAM OUTER FACE AND ALL SOFFITS, PARTIAL RETAINING WALL, BENT CAP, & AESTHETIC PANEL FORMLINER.
2. PROVIDE A FULL SIZE SAMPLE OF THE CITY OF ROUND ROCK LOGO FOR CITY APPROVAL USING THE FOLLOWING COLORS FOR EACH BRUSH STROKE:
   PANTONE 288 (R:0, G:40, B:122) - TOP BRUSH STROKE.
   PANTONE 1805 (R:187, G:45, B:63) - LEFT BRUSH STROKE.
   PANTONE 288 80% (R:66, G:87, B:142) - RIGHT BRUSH STROKE.

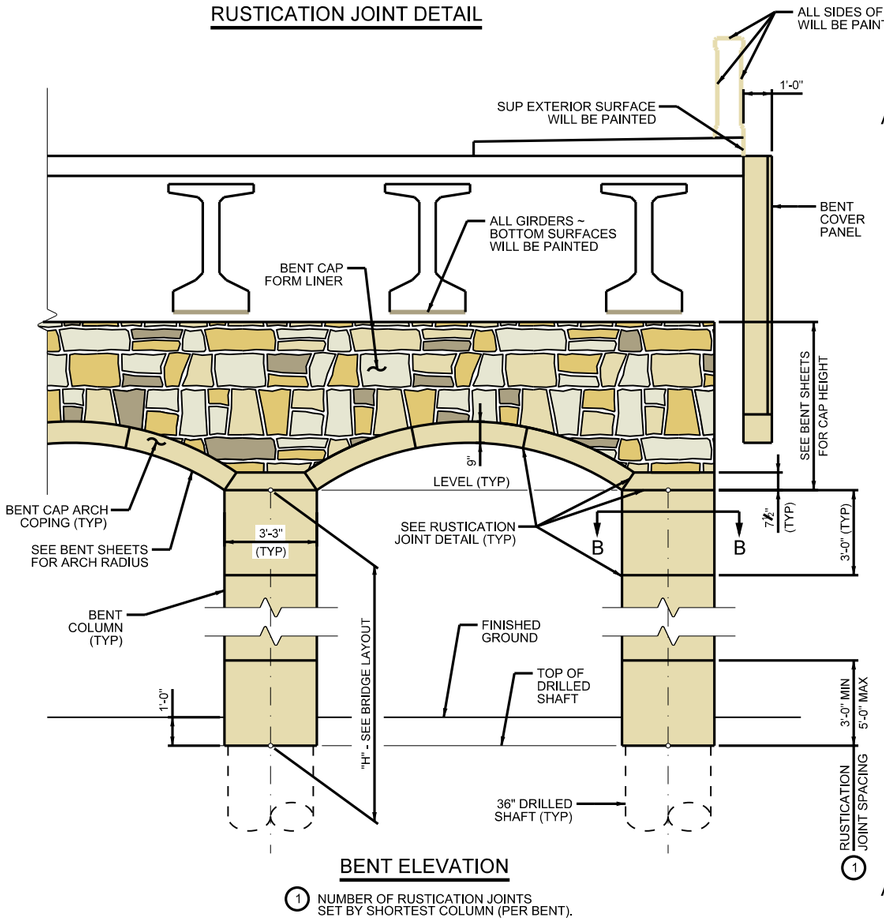

BENT ELEVATION

(1) NUMBER OF RUSTICATION JOINTS SET BY SHORTEST COLUMN (PER BENT).

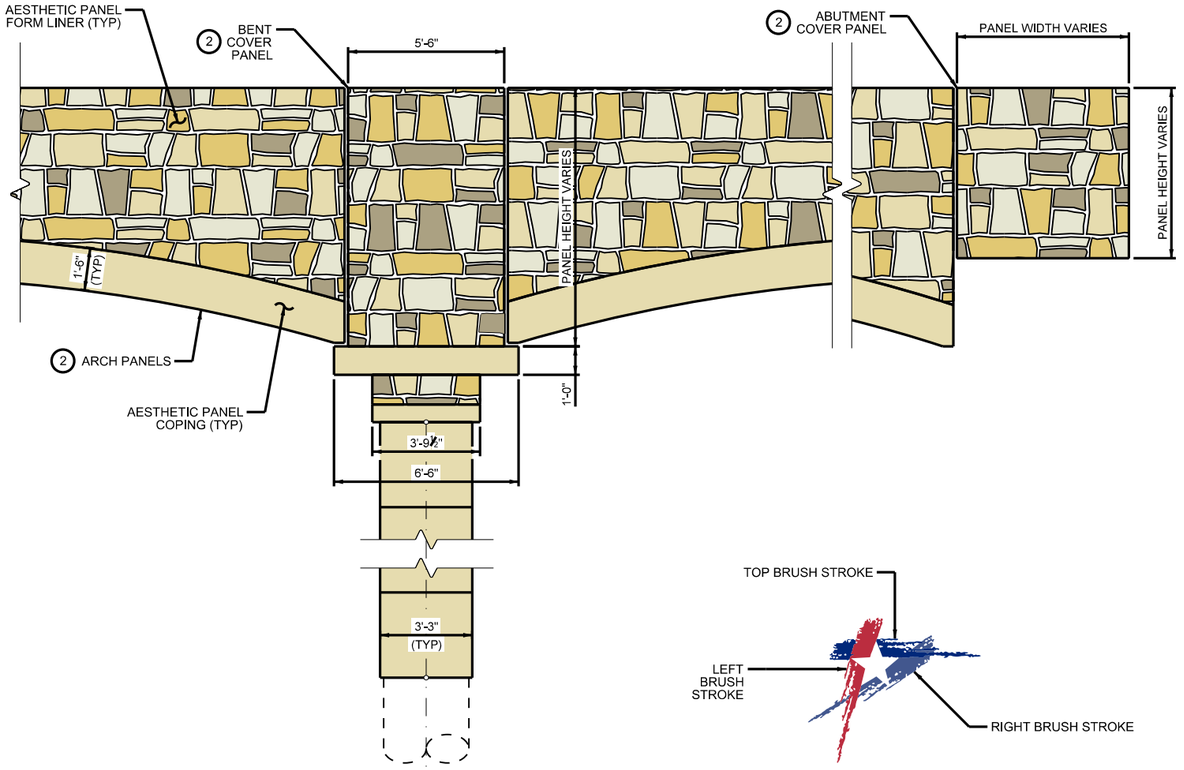

ELEVATION A-A

(2) SEE SHEETS 02-04 FOR ADDITIONAL PANEL DETAILS.

CITY OF ROUND ROCK LOGO

WYOMING SPRINGS
SEGMENT 1
ROUND ROCK, TX

AGUIRRE & FIELDS
ENGINEERING INNOVATORS
TBPE FIRM REGISTRATION # 739

Revision No.	Date	Description

STATE OF TEXAS
RYAN J. WILLIAMS
110418
LICENSED
PROFESSIONAL ENGINEER
4/17/2023

100% SUBMITTAL

Project No.:	36179
Issued:	4/17/2023
Drawn By:	QBH
Checked By:	RJW
Scale:	

Sheet Title
NB WYOMING SPRINGS AT BRUSHY CREEK AESTHETIC DETAILS SHEET 01 OF 04

252
Sheet Number

NORTH OFFICE
NORTH OFFICE

14815-Open.dgn
14815-Open.dgn

Default
DEFAULT

CITY OF ROUND ROCK

USER: default

12:33:23 PM

4/17/2023

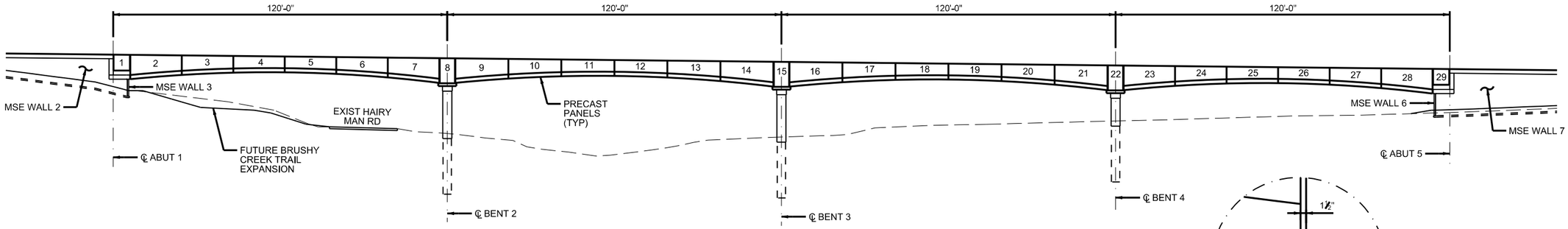

ELEVATION

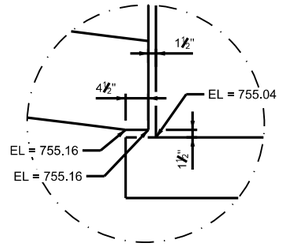

DETAIL "A"

(OTHER BENT LOCATIONS SIMILAR)

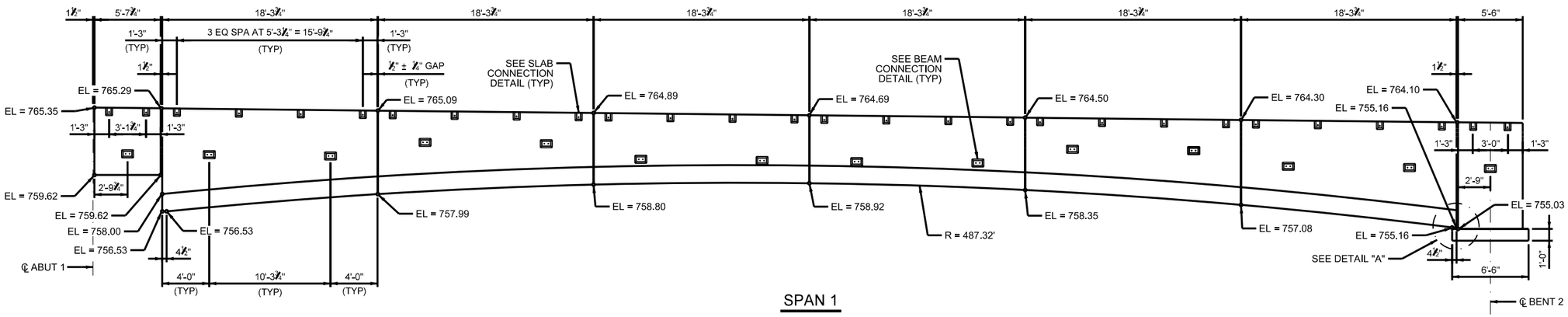

SPAN 1

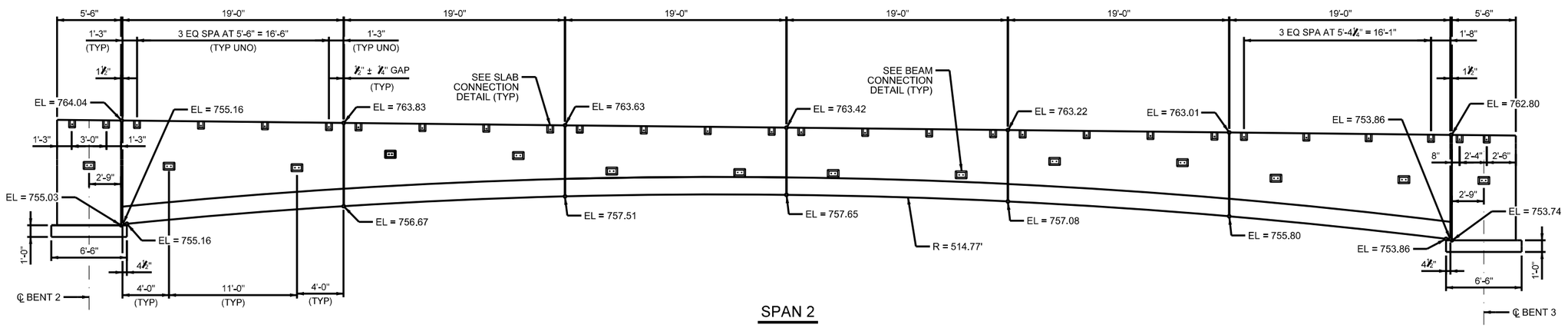

SPAN 2

WYOMING SPRINGS
SEGMENT 1
ROUND ROCK, TX

ROUND ROCK, TEXAS

AGUIRRE & FIELDS
ENGINEERING INNOVATORS
TBPE FIRM REGISTRATION # 739

Revision No.	Date	Description

STATE OF TEXAS
RYAN J. WILLIAMS
110418
LICENSED
PROFESSIONAL ENGINEER
4/17/2023

100% SUBMITTAL

Project No.:	36179
Issued:	3/30/2023
Drawn By:	QBH
Checked By:	RJW
Scale:	

Sheet Title
NB WYOMING SPRINGS AT BRUSHY CREEK AESTHETIC DETAILS SHEET 02 OF 04

253
Sheet Number

AUSTIN OFFICE
AUSTIN, TEXAS
3/30/2023
I:\Projects\36179\Design\Roadway\Exhibits\Aesthetic Details\36179_Aesthetic Details.dwg
CITY OF ROUND ROCK
DWG
USER: rwilliams
6:31:13 PM

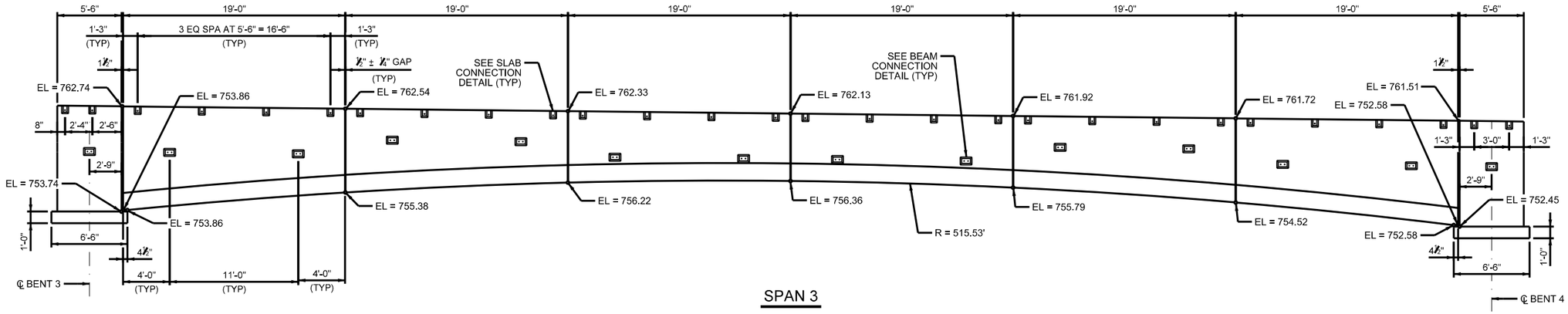

SPAN 3

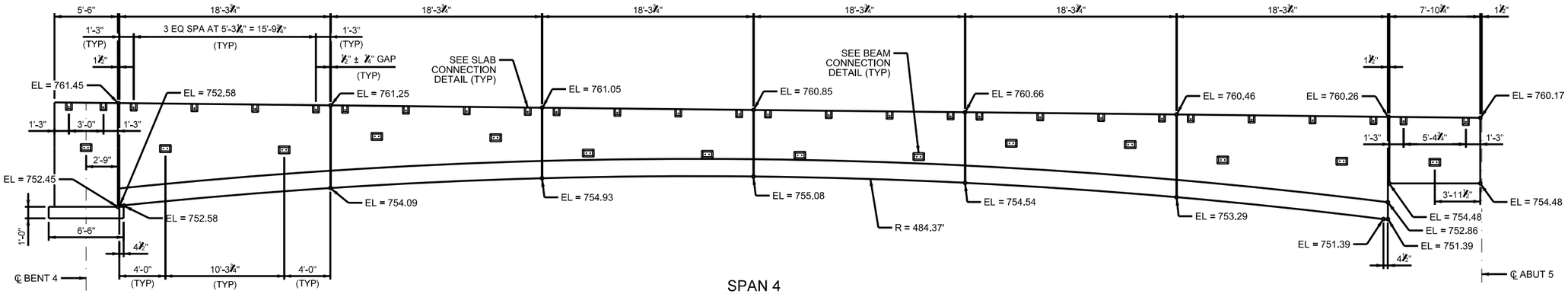

SPAN 4

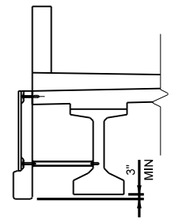

PANEL CONNECTION DETAIL

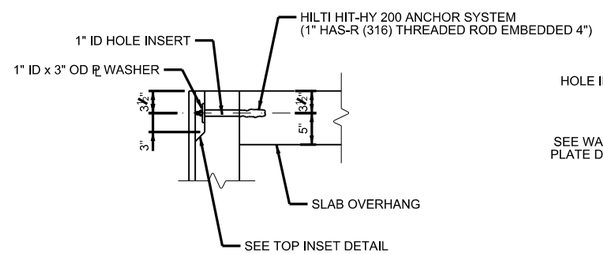

SLAB CONNECTION DETAIL

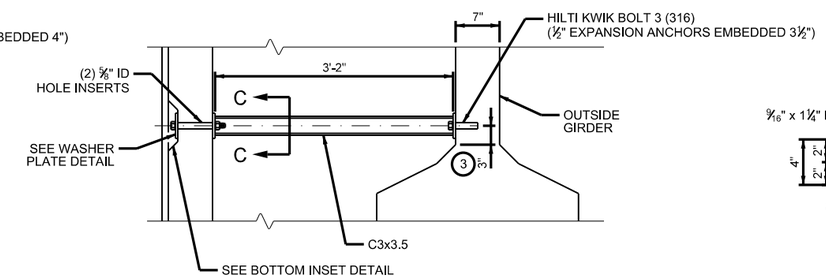

BEAM CONNECTION DETAIL

3 1'-6" FOR PANELS 3, 6, 10, 13, 17, 20, 24 & 27.
SEE ELEVATION ON SHEET 02 OF 04 FOR PANEL NUMBERS.

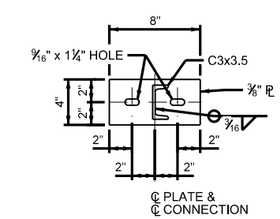

SECTION C-C

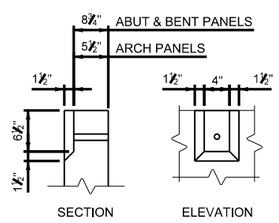

TOP INSET DETAIL

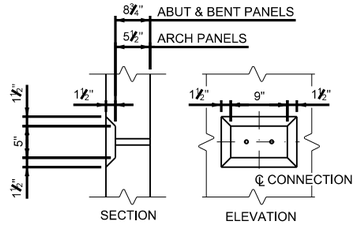

BOTTOM INSET DETAIL

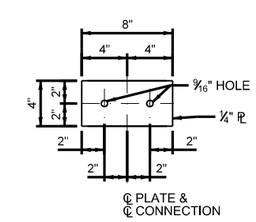

WASHER PLATE DETAIL

WYOMING SPRINGS
SEGMENT 1
ROUND ROCK, TX

ROUND ROCK, TEXAS

AGUIRRE & FIELDS
ENGINEERING INNOVATORS
TBPE FIRM REGISTRATION # 739

Revision		
No.	Date	Description

STATE OF TEXAS
RYAN J. WILLIAMS
110418
LICENSED
PROFESSIONAL ENGINEER
4/17/2023

100% SUBMITTAL

Project No.:	36179
Issued:	3/30/2023
Drawn By:	QBH
Checked By:	RJW
Scale:	

Sheet Title
NB WYOMING SPRINGS AT BRUSHY CREEK AESTHETIC DETAILS SHEET 03 OF 04

254
Sheet Number

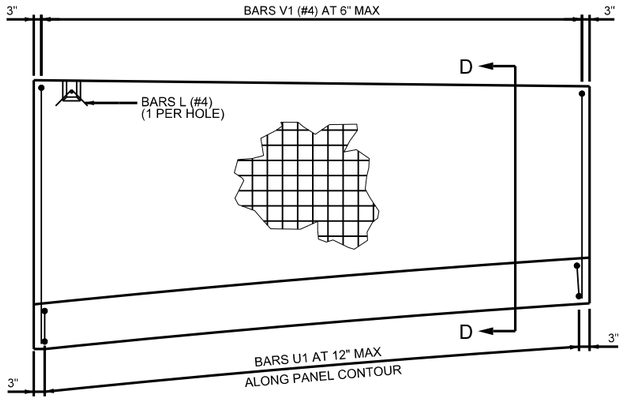

ARCH PANEL REINFORCEMENT

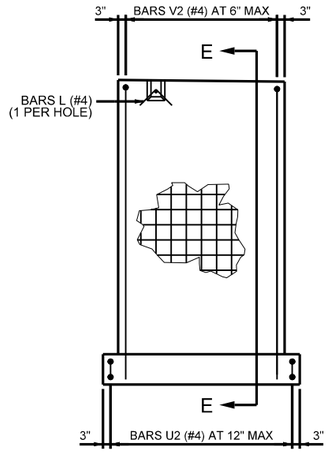

BENT COVER PANEL REINFORCEMENT

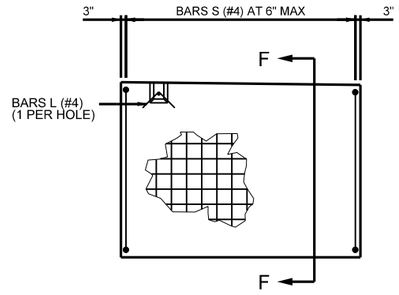

ABUTMENT COVER PANEL REINFORCEMENT

PANEL NOTES:
1. ALL CLEAR COVER SHALL BE 2" UNLESS OTHERWISE NOTED.
2. FABRICATOR SHALL ADJUST REINFORCING TO AVOID CONFLICT WITH TOP AND BOTTOM INSETS AND PROVIDE A MINIMUM CLEAR COVER OF 2". SEE INSET DETAILS ON SHEET 03 OF 04.
3. FABRICATOR SHALL SUBMIT AESTHETIC PANEL SHOP DRAWINGS FOR REVIEW AND APPROVAL BY THE ENGINEER.

PANEL CONNECTION NOTES:
1. STEEL PLATES AND STEEL CHANNELS SHALL CONFORM TO ASTM A36. GALVANIZE ALL STEEL COMPONENTS UNLESS NOTED OTHERWISE.
2. ANCHOR RODS SHALL BE AS SPECIFIED WITH ONE HEX NUT AND ONE HARDENED STEEL WASHER AT EACH BOLT. MINIMUM EMBEDMENT DEPTHS SHALL BE AS DETAILED.
3. FOLLOW MANUFACTURER'S DIRECTIONS FOR INSTALLING EPOXY ANCHORS. OTHER TYPE III (CLASS C) EPOXY ANCHORS MEETING THE REQUIREMENTS OF DMS-6100, "EPOXIES AND ADHESIVES", MAY BE USED IF IT CAN BE DEMONSTRATED THAT THEY MEET OR EXCEED THE STRENGTH OF HILTI HIT-HY 200 WITH THE SAME EMBEDMENT DEPTH, ANCHOR ROD SIZE AND SPACING.
4. BOLTED CONNECTIONS OTHER THAN EPOXY ANCHORS AND WEDGE ANCHORS SHALL CONFORM TO ASTM A325. BOLTS SHALL BE TENSIONED TO THE MINIMUM BOLT TENSION VALUES AS SPECIFIED IN ITEM 447. BOLTED CONNECTIONS WITH OVERSIZED OR SLOTTED HOLES ARE SLIP-CRITICAL.
5. NUTS SHALL CONFORM TO ASTM A563, AMERICAN STANDARD, GRADE A HEAVY HEX.
6. WASHERS SHALL CONFORM TO ASTM 436, TYPE 1.
7. ALL STRUCTURAL STEEL, INCLUDING ALL BOLTS, NUTS AND WASHERS SHALL BE HOT-DIP GALVANIZED AFTER FABRICATION.
8. EXCESS GALVANIZING MATERIAL SHALL BE REMOVED FROM THE THREADED PORTIONS OF THE BOLTS BY THE USE OF A CENTRIFUGE OR BY MECHANICAL CHASING OF THE BOLT THREADS.
9. ALL WELDING SHALL CONFORM TO THE LATEST SPECIFICATIONS OF THE AMERICAN WELDING SOCIETY. ALL WELDED CONNECTIONS SHALL BE MADE WITH AWS A5.1 OR A5.5 E70XX ELECTRODE.
10. USE A ZINC-RICH PAINT TO REPAIR AREAS OF DAMAGED GALVANIZING.

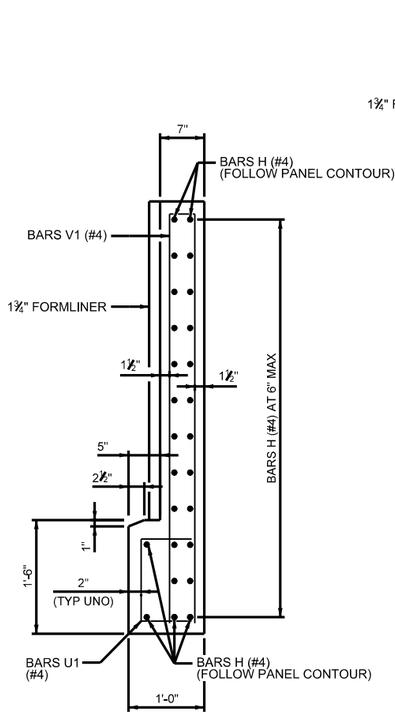

SECTION D-D

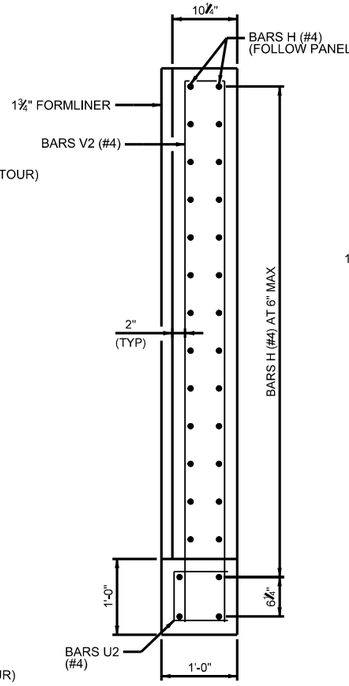

SECTION E-E

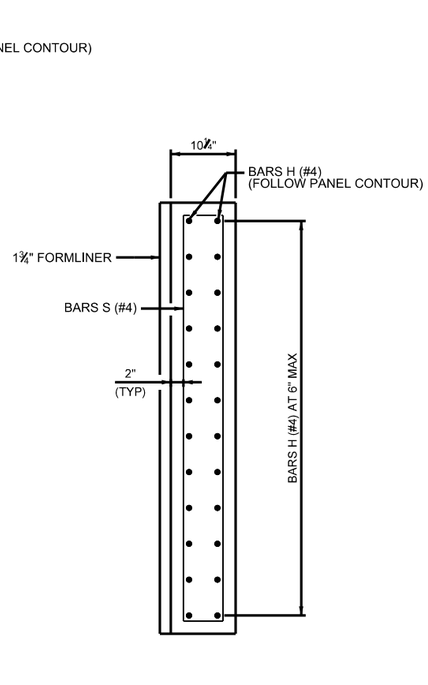

SECTION F-F

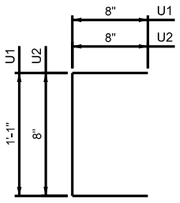

BARS U

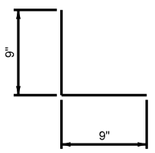

BARS L

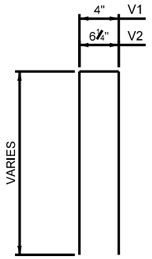

BARS V

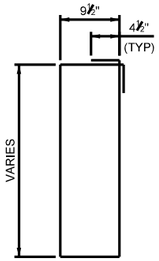

BARS S



HANDLING/TRANSPORT INSTRUCTIONS

PANEL SHALL BE SUPPORTED BY A MINIMUM OF 2 SUPPORTS AT ALL TIMES. SUPPORTS SHALL BE POSITIONED AT QUARTER POINTS OF PANEL.

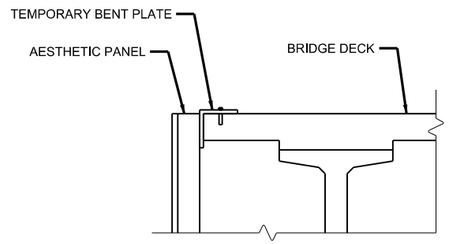

PANEL INSTALLATION BENT PLATE

BENT PLATES SHALL BE TEMPORARILY ANCHORED TO DECK AND WELDED TO BACK OF PANELS DURING INSTALLATION OF PANEL PERMANENT CONNECTIONS.

WYOMING SPRINGS
SEGMENT 1
ROUND ROCK, TX

ROUND ROCK, TEXAS

AGUIRRE & FIELDS
ENGINEERING INNOVATORS
TBPE FIRM REGISTRATION # 739

Revision No.	Date	Description

STATE OF TEXAS
RYAN J. WILLIAMS
110418
LICENSED
PROFESSIONAL ENGINEER
4/17/2023

100% SUBMITTAL

Project No.:	36179
Issued:	3/30/2023
Drawn By:	QBH
Checked By:	RJW
Scale:	

Sheet Title
NB WYOMING SPRINGS AT BRUSHY CREEK AESTHETIC DETAILS SHEET 04 OF 04

255
Sheet Number

NORTH OFFICE
NOT FOR CONSTRUCTION
1810 Gause Blvd
Slidell, LA 70458
Date:
3/30/2023
CITY OF ROUND ROCK
USER: dwall
8:31:47 PM
3/30/2023

DRILLING LOG

WinCore Version 3.0

County: | Highway: | CSJ:

Hole: B-3 | Structure: | Station: 142+10 | Offset:

District: | Date: 02/26/20 | Grnd. Elev.: 751.00 ft | GW Elev.: 735.00 ft

Elev. (ft)	LOG	Texas Cone Penetrometer	Strata Description	Triaxial Test: Lateral Press. (psi)	Triaxial Test: Deviator Stress (psi)	Properties: MC	LL	PI	Wet Den. (pcf)	Additional Remarks
749.0			CLAY, Lean, Hard, Brown (CL)			20	30	13		
			LIMESTONE, Hard to Very Hard, Tan			23				
		50 (2) 50 (1)				27				
						18				
		50 (1) 50 (0)				20				
		50 (1) 50 (0.5)				20				
734.0			CLAY, Fat, Reddish-Brown (CH)							
730.5		38 (6) 50 (5)	LIMESTONE, Hard to Very Hard, Gray							
		50 (1) 50 (1)				29				
		50 (0.5) 50 (0)								

Remarks:
Lat, Long: 30.526977, -97.722659

Any ground water elevation information provided on this boring log is representative of conditions existing on the day and for the specific location where this information was collected. The actual groundwater elevation may fluctuate due to time, climatic conditions, and/or construction activity

Driller: **Logger:** **Organization: Raba-Kistner Consultants, Inc.**

FIGURE: 4a

DRILLING LOG

WinCore Version 3.0

County: | Highway: | CSJ:

Hole: B-3 | Structure: | Station: 142+10 | Offset:

District: | Date: 02/26/20 | Grnd. Elev.: 751.00 ft | GW Elev.: 735.00 ft

Elev. (ft)	LOG	Texas Cone Penetrometer	Strata Description	Triaxial Test: Lateral Press. (psi)	Triaxial Test: Deviator Stress (psi)	Properties: MC	LL	PI	Wet Den. (pcf)	Additional Remarks
			LIMESTONE, Hard to Very Hard, Gray							
32										
34		50 (0) 50 (0.5)				21				
36										
38										
40		50 (1) 50 (0.5)								
42										
44		50 (0) 50 (0)				19				
46										
48										
50		50 (1) 50 (0)								
52										
54		50 (1) 50 (0.5)				17				
56										
58										
60		50 (0.5) 50 (0.5)								

Remarks:
Lat, Long: 30.526977, -97.722659

Any ground water elevation information provided on this boring log is representative of conditions existing on the day and for the specific location where this information was collected. The actual groundwater elevation may fluctuate due to time, climatic conditions, and/or construction activity

Driller: **Logger:** **Organization: Raba-Kistner Consultants, Inc.**

FIGURE: 4b

STATE OF TEXAS
RICHARD T SHIMONO
135020
LICENSED
PROFESSIONAL ENGINEER

4/05/2023

WYOMING SPRINGS
SEGMENT 1
ROUND ROCK, TX

ROUND ROCK, TEXAS

RABA KISTNER
TBPE Firm Registration No. F-3257

Revision No.	Date	Description

100% SUBMITTAL

Project No.:	36179
Issued:	3/15/2023
Drawn By:	QBH
Checked By:	RJW
Scale:	

Sheet Title
NB WYOMING SPRINGS AT BRUSHY CREEK
BORING LOGS
SHEET 01 OF 05

256
Sheet Number

DRILLING LOG

3 of 3

WinCore Version 3.0	County	Hole	B-3	District	
	Highway	Structure		Date	02/26/20
	CSJ	Station	142+10	Grnd. Elev.	751.00 ft
		Offset		GW Elev.	735.00 ft

Elev. (ft)	LOG	Texas Cone Penetrometer	Strata Description	Triaxial Test Lateral Press. (psi)	Triaxial Test Deviator Stress (psi)	Properties MC	LL	PI	Wet Den. (pcf)	Additional Remarks
			LIMESTONE, Hard to Very Hard, Gray							
62										
84		50 (0.5) 50 (0)				19				
66										
68										
681.0 70		50 (1) 50 (0)								
72										
74										
76										
78										
80										
82										
84										
86										
66										
90										

Remarks:
Lat, Long: 30.526977, -97.722659

Any ground water elevation information provided on this boring log is representative of conditions existing on the day and for the specific location where this information was collected. The actual groundwater elevation may fluctuate due to time, climatic conditions, and/or construction activity.

Driller: **Logger:** **Organization: Raba-Kistner Consultants, Inc.**

FIGURE: 4c

DRILLING LOG

1 of 3

WinCore Version 3.0	County	Hole	B-4	District	
	Highway	Structure		Date	02/27/20
	CSJ	Station	139+20	Grnd. Elev.	742.00 ft
		Offset		GW Elev.	730.00 ft

Elev. (ft)	LOG	Texas Cone Penetrometer	Strata Description	Triaxial Test Lateral Press. (psi)	Triaxial Test Deviator Stress (psi)	Properties MC	LL	PI	Wet Den. (pcf)	Additional Remarks
			CLAY, Lean, Brown (CL)			3				
740.0 2			LIMESTONE, Hard to Vary Hard, Tan			3				
4		50 (1) 50 (0.5)				19				
6						17				
8						18				
10		50 (2) 50 (1)								
12										
14		50 (1) 50 (0.5)				14				
16										
18										
20		50 (0.5) 50 (0)								
720.0 22			LIMESTONE, Hard to Very Hard, Gray							
24		50 (0.5) 50 (0.5)				27				
26										
28										
30		50 (0.5) 50 (0)								

Remarks:
Lat, Long: 30.526261, -97.72226

Any ground water elevation information provided on this boring log is representative of conditions existing on the day and for the specific location where this information was collected. The actual groundwater elevation may fluctuate due to time, climatic conditions, and/or construction activity.

Driller: **Logger:** **Organization: Raba-Kistner Consultants, Inc.**

FIGURE: 5a

STATE OF TEXAS
RICHARD T. SHIMONO
135020
LICENSED
PROFESSIONAL ENGINEER

4/05/2023

WYOMING SPRINGS
SEGMENT 1
ROUND ROCK, TX

ROUND ROCK, TEXAS

RABA KISTNER
TBPE Firm Registration No. F-3257

Revision No.	Date	Description

100% SUBMITTAL

Project No.:	36179
Issued:	3/15/2023
Drawn By:	QBH
Checked By:	RJW
Scale:	

Sheet Title
NB WYOMING SPRINGS AT BRUSHY CREEK
BORING LOGS
SHEET 02 OF 05

257
Sheet Number

DRILLING LOG

WinCore Version 3.0	County		Hole	B-4	District
	Highway		Structure		Date 02/27/20
	CSJ		Station	139+20	Grnd. Elev. 742.00 ft
			Offset		GW Elev. 730.00 ft

Elev. (ft)	LOG	Texas Cone Penetrometer	Strata Description	Triaxial Test: Lateral Press. (psi)	Triaxial Test: Deviator Stress (psi)	Properties: MC	LL	PI	Wet Den. (pcf)	Additional Remarks
			LIMESTONE, Hard to Very Hard, Gray							
32										
34		50 (0.5) 50 (1)				14				
36										
36										
40		50 (1) 50 (0.5)								
42										
44		50 (0.5) 50 (0.5)				15				
46										
46										
50		50 (0.5) 50 (0)								
52										
54		50 (0.5) 50 (0.5)				15				
56										
58										
60		50 (1) 50 (0)								

Remarks:
Lat, Long: 30.526261, -97.72226

Any ground water elevation information provided on this boring log is representative of conditions existing on the day and for the specific location where this information was collected. The actual groundwater elevation may fluctuate due to time, climatic conditions, and/or construction activity.

Driller: **Logger:** **Organization: Raba-Kistner Consultants, Inc.**

FIGURE: 5b

DRILLING LOG

WinCore Version 3.0	County		Hole	B-4	District
	Highway		Structure		Date 02/27/20
	CSJ		Station	139+20	Grnd. Elev. 742.00 ft
			Offset		GW Elev. 730.00 ft

Elev. (ft)	LOG	Texas Cone Penetrometer	Strata Description	Triaxial Test: Lateral Press. (psi)	Triaxial Test: Deviator Stress (psi)	Properties: MC	LL	PI	Wet Den. (pcf)	Additional Remarks
			LIMESTONE, Hard to Very Hard, Gray							
62										
64		50 (0) 50 (0.5)								
66										
68										
672.0 70		50 (0.5) 50 (0)								
72										
74										
76										
78										
80										
82										
84										
86										
88										
90										

Remarks:
Lat, Long: 30.526261, -97.72226

Any ground water elevation information provided on this boring log is representative of conditions existing on the day and for the specific location where this information was collected. The actual groundwater elevation may fluctuate due to time, climatic conditions, and/or construction activity

Driller: **Logger:** **Organization: Raba-Kistner Consultants, Inc.**

FIGURE: 5c

STATE OF TEXAS
RICHARD T. SHIMONO
135020
LICENSED
PROFESSIONAL ENGINEER

4/05/2023

WYOMING SPRINGS
SEGMENT 1
ROUND ROCK, TX

ROUND ROCK, TEXAS

RABA KISTNER
TBPE Firm Registration No. F-3257

Revision No.	Date	Description

100% SUBMITTAL

Project No.:	36179
Issued:	3/15/2023
Drawn By:	QBH
Checked By:	RJW
Scale:	

Sheet Title
NB WYOMING SPRINGS
AT BRUSHY CREEK
BORING LOGS
SHEET 03 OF 05

258
Sheet Number

DRILLING LOG

WinCore Version 3.0

County: | Highway: CSJ | Hole: B-5 | Structure: | Station: 136+20 | Offset: | District: | Date: 02/18/20 | Grnd. Elev.: 751.00 ft | GW Elev.: 739.00 ft

Elev. (ft)	LOG	Texas Cone Penetrometer	Strata Description	Triaxial Test: Lateral Press. (psi)	Triaxial Test: Deviator Stress (psi)	Properties: MC	LL	PI	Wet Den. (pcf)	Additional Remarks
			CL-ML, Soft, Dark Brown to Brown			29				- PP: 2.5 tsf
2						11	24	5		- PP: 4.5 tsf
4		8 (6) 7 (8)				20				- PP: 3.5 tsf
6						19				
						19				- PP: 4.0 tsf
8						20				- PP: 3.0 tsf
10		9 (6) 8 (9)								
739.0			LIMESTONE, Very Hard, Tan							
12						33				
14		50 (0.5) 50 (0)								
16						27				
18		50 (0.5) 50 (0)								
20										
22						18				
24		50 (0) 50 (0)								
726.0			LIMESTONE, Very Hard to Hard, Gray							
26										
28						18				
30		50 (0) 50 (0)								

Remarks:
Lat, Long: 30.525491, -97.721963

Any ground water elevation information provided on this boring log is representative of conditions existing on the day and for the specific location where this information was collected. The actual groundwater elevation may fluctuate due to time, climatic conditions, and/or construction activity.

Driller: **Logger:** **Organization: Raba-Kistner Consultants, Inc.**

FIGURE: 6a

DRILLING LOG

WinCore Version 3.0

County: | Highway: CSJ | Hole: B-5 | Structure: | Station: 136+20 | Offset: | District: | Date: 02/18/20 | Grnd. Elev.: 751.00 ft | GW Elev.: 739.00 ft

Elev. (ft)	LOG	Texas Cone Penetrometer	Strata Description	Triaxial Test: Lateral Press. (psi)	Triaxial Test: Deviator Stress (psi)	Properties: MC	LL	PI	Wet Den. (pcf)	Additional Remarks
			LIMESTONE, Very Hard to Hard, Gray							
32						16				
34		50 (0.5) 50 (0)								
36										
38						20				
40		50 (0) 50 (0								
42						27				
44		50 (0.5) 50 (0)								
46										
48						24				
50		50 (0) 50 (0)								
52										
54		50 (1.5) 50 (0.5)				20				
56										
58						25				
60		50 (0.5) 50 (0.5)								

Remarks:
Lat, Long: 30.525491, -97.721963

Any ground water elevation information provided on this boring log is representative of conditions existing on the day and for the specific location where this information was collected. The actual groundwater elevation may fluctuate due to time, climatic conditions, and/or construction activity.

Driller: **Logger:** **Organization: Raba-Kistner Consultants, Inc.**

FIGURE: 6b

STATE OF TEXAS
RICHARD T. SHIMONO
135020
LICENSED
PROFESSIONAL ENGINEER

4/05/2023

WYOMING SPRINGS
SEGMENT 1
ROUND ROCK, TX

ROUND ROCK, TEXAS

RABA KISTNER
TBPE Firm Registration No. F-3257

Revision No.	Date	Description

100% SUBMITTAL

Project No.:	36179
Issued:	3/15/2023
Drawn By:	QBH
Checked By:	RJW
Scale:	

Sheet Title
NB WYOMING SPRINGS AT BRUSHY CREEK
BORING LOGS
SHEET 04 OF 05

259
Sheet Number

DRILLING LOG

WinCore Version 3.0	County	Hole	B-5	District	
	Highway	Structure		Date	02/18/20
	CSJ	Station	136+20	Grnd. Elev.	751.00 ft
		Offset		GW Elev.	739.00 ft

Elev. (ft)	LOG	Texas Cone Penetrometer	Strata Description	Triaxial Test: Lateral Press. (psi)	Triaxial Test: Deviator Stress (psi)	Properties: MC	Properties: LL	Properties: PI	Properties: Wet Den. (pcf)	Additional Remarks
			LIMESTONE, Very Hard to Hard, Gray							
62						19				
64		50 (2) 50 (1)								
66										
68						19				
001.0 70		50 (0.5) 50 (0)								
72										
74										
76										
78										
80										
82										
84										
88										
88										
90										

Remarks:
Lat, Long: 30.525491, -97.721983

Any ground water elevation information provided on this boring log is representative of conditions existing on the day and for the specific location where this information was collected. The actual groundwater elevation may fluctuate due to time, climatic conditions, and/or construction activity.

Driller: **Logger:** **Organization: Raba-Kistner Consultants, Inc.**

FIGURE: 6c

STATE OF TEXAS
RICHARD T. SHIMONO
135020
LICENSED
PROFESSIONAL ENGINEER

4/05/2023

WYOMING SPRINGS
SEGMENT 1
ROUND ROCK, TX

ROUND ROCK, TEXAS

RABA KISTNER
TBPE Firm Registration No. F-3257

Revision No.	Data	Description

100% SUBMITTAL

Project No.:	36179
Issued:	3/15/2023
Drawn By:	QBH
Checked By:	RJW
Scale:	

Sheet Title
NB WYOMING SPRINGS
AT BRUSHY CREEK
BORING LOGS
SHEET 05 OF 05

260
Sheet Number

STRUCTURE	DESIGNED GIRDERS									DEPRESSED STRAND PATTERN		CONCRETE		OPTIONAL DESIGN				
	SPAN NO.	GIRDER NO.	GIRDER TYPE	PRESTRESSING STRANDS						NO.	TO END (in)	RELEASE STRGTH (1) f'ci (ksi)	MINIMUM 28 DAY COMP STRGTH f'c (ksi)	DESIGN LOAD COMP STRESS (TOP ℄) (SERVICE I) fct(ksi)	DESIGN LOAD TENSILE STRESS (BOTT ℄) (SERVICE III) fcb(ksi)	REQUIRED MINIMUM ULTIMATE MOMENT CAPACITY (STRENGTH I) (kip-ft)	LIVE LOAD DISTRIBUTION FACTOR (2)	
				NON-STD STRAND PATTERN	TOTAL NO.	SIZE (in)	STRGTH fpu (ksi)	"e" ℄ (in)	"e" END (in)								Moment	Shear
NB WYOMING SPRINGS AT BRUSHY CREEK BRIDGE	ALL	1	Tx54		38	0.6	270	19.22	12.27	6	50.5	5.000	6.000	4.130	-3.946	7609	0.590	0.746
	ALL	2 & 3	Tx54		36	0.6	270	19.34	12.01	6	50.5	4.700	6.000	3.961	-3.733	7041	0.516	0.746
	ALL	4 - 6	Tx54		46	0.6	270	18.66	11.36	8	50.5	5.800	7.500	4.303	-4.491	8717	0.590	0.746

NON-STANDARD STRAND PATTERNS

PATTERN	STRAND ARRANGEMENT AT ℄ OF GIRDER

(1) Based on the following allowable stresses (ksi):

Compression = 0.65 f'ci

Tension = $0.24\sqrt{f'ci}$

Optional designs must likewise conform.

(2) Portion of full HL93.

DESIGN NOTES:

Designed according to AASHTO LRFD Bridge Design Specifications.

Optional designs for girders 120 feet or longer must have a calculated residual camber equal to or greater than that of the designed girder.

Prestress losses for the designed girders have been calculated for a relative humidity of 60 percent. Optional designs must likewise conform.

FABRICATION NOTES:

Provide Class H concrete.

Provide Grade 60 reinforcing steel bars.

Use low relaxation strands, each pretensioned to 75 percent of fpu.

Strand debonding must comply with Item 424.4.2.2.2.4. Full-length debonded strands are only permitted in positions marked Δ. Double wrap full-length debonded strands in outer most position of each row.

When shown on this sheet, the Fabricator has the option of furnishing either the designed girder or an approved optional design. All optional design submittals must be signed, sealed and dated by a Professional Engineer registered in the State of Texas.

Seal cracks in girder ends exceeding 0.005" in width as directed by the Engineer. The fabricator is permitted to decrease the spacing of Bars R and S by providing additional bars to help limit crack width provided the decreased spacing results in no less than 1" clear between bars. The fabricator must take an approved corrective action if cracks greater than 0.005" form on a repetitive basis.

DEPRESSED STRAND DESIGNS:

Locate strands for the designed girder as low as possible on the 2" grid system unless a non-standard strand pattern is indicated. Fill row "2.5", then row "4.5", then row "6.5", etc., beginning each row in the "A" position and working outward until the required number of strands is reached. All strands in the "A" position must be depressed, maintaining the 2" spacing so that, at the girder ends, the upper two strands are in the position shown in the table.

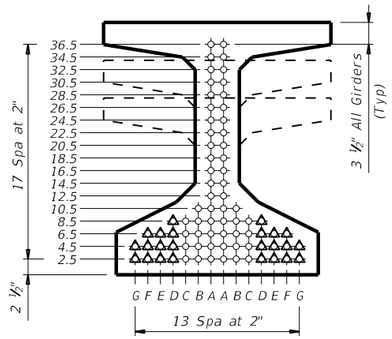

TYPE Tx28, Tx34 & Tx40

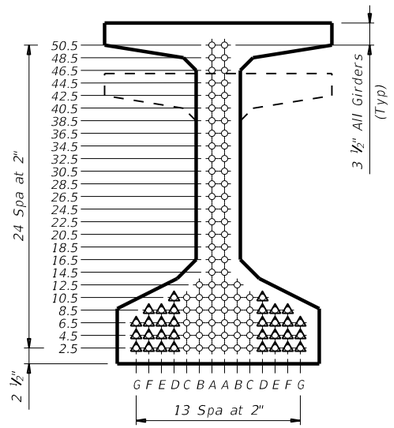

TYPE Tx46 & Tx54

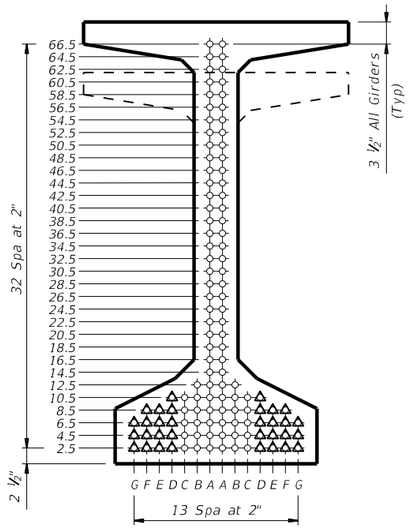

TYPE Tx62 & Tx70

HL93 LOADING

AGUIRRE & FIELDS, LP
TBPELS FIRM REGISTRATION #739



4/17/2023

Texas Department of Transportation

Bridge Division Standard

PRESTRESSED CONCRETE I-GIRDER DESIGNS (NON-STANDARD SPANS)

IGND

FILE: IGND_BCNB.dgn	DN: TxDOT	CK: TxDOT	DW: EFC	CK: TAR
©TxDOT August 2017	CONT	SECT	JOB	HIGHWAY
REVISIONS 10-19: Modified for depressed strands only.				WYM SPR
	DIST	COUNTY		SHEET NO.
		WILLIAMSON		261

DISCLAIMER:
The use of this standard is governed by the "Texas Engineering Practice Act". No warranty of any kind is made by TxDOT for any purpose whatsoever. TxDOT assumes no responsibility for the conversion of this standard to other formats or for incorrect results or damages resulting from its use.

DATE: 3/30/2023 6:34:01 PM
FILE: c:\pw-of\pw-of-prod\quan.haaguirre-fields.com\d0226434\IGND_BCNB.dgn

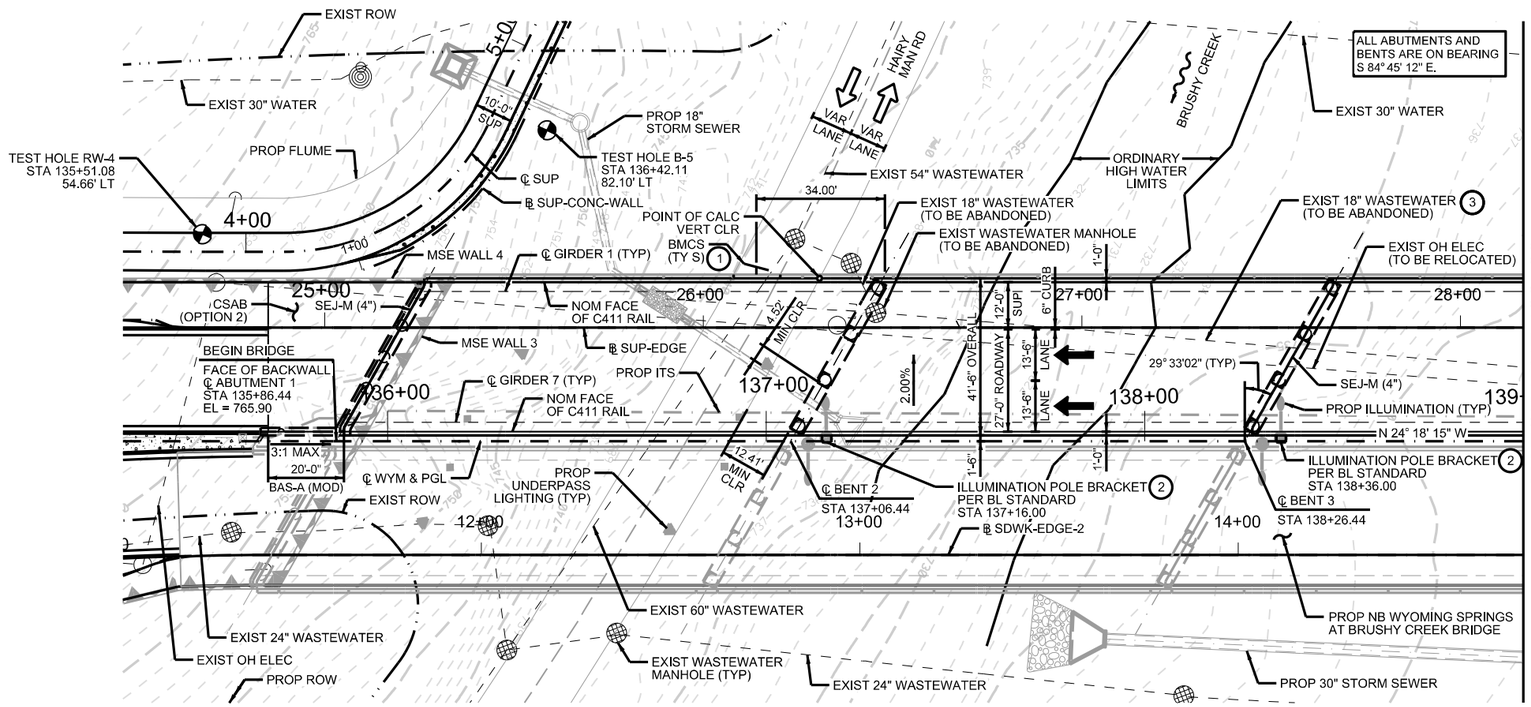

PLAN

DESIGN SPEED: 45 MPH
FUNCTIONAL CLASS: ARTERIAL
2022 ADT: 3,800
2042 ADT: 7,550
NBI NO: 14-246-E020-21-004

GENERAL NOTES:
1. DESIGNED IN ACCORDANCE WITH AASHTO LRFD BRIDGE DESIGN SPECIFICATIONS, 9TH EDITION (2020).
2. ALL DIMENSIONS ARE EITHER HORIZONTAL OR VERTICAL AND MUST BE CORRECTED FOR GRADE AND CROWN.
3. "H" VALUES SHOWN ARE ESTIMATED COLUMN HEIGHTS. CONTRACTOR IS RESPONSIBLE FOR CALCULATING ACTUAL COLUMN HEIGHTS BASED ON FIELD CONDITIONS.
4. CONTRACTOR SHALL VERIFY LOCATIONS OF EXISTING UTILITIES PRIOR TO CONSTRUCTION.
5. "D" DENOTES BENTS WITH DOWELED END CONDITION. SEE BENT SHEETS FOR LOCATIONS OF DOWELS D.
6. SEE "BORING LOGS" SHEETS FOR BORING LOG INFORMATION.
7. SEE "AESTHETIC DETAILS" SHEETS FOR AESTHETIC INFORMATION.
8. SEE "ILLUMINATION PLAN" AND "PCGU" SHEETS FOR ILLUMINATION AND FUTURE ITS INFORMATION.

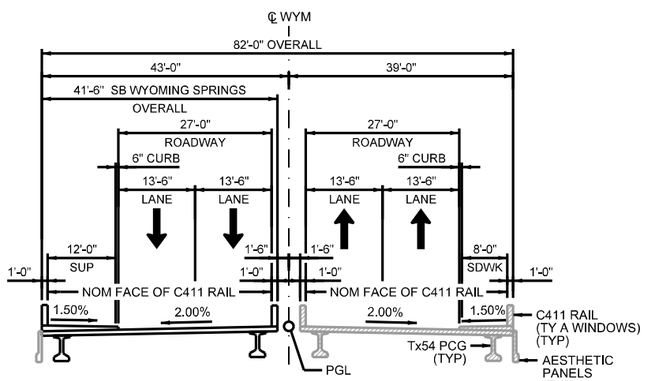

TYPICAL SECTION

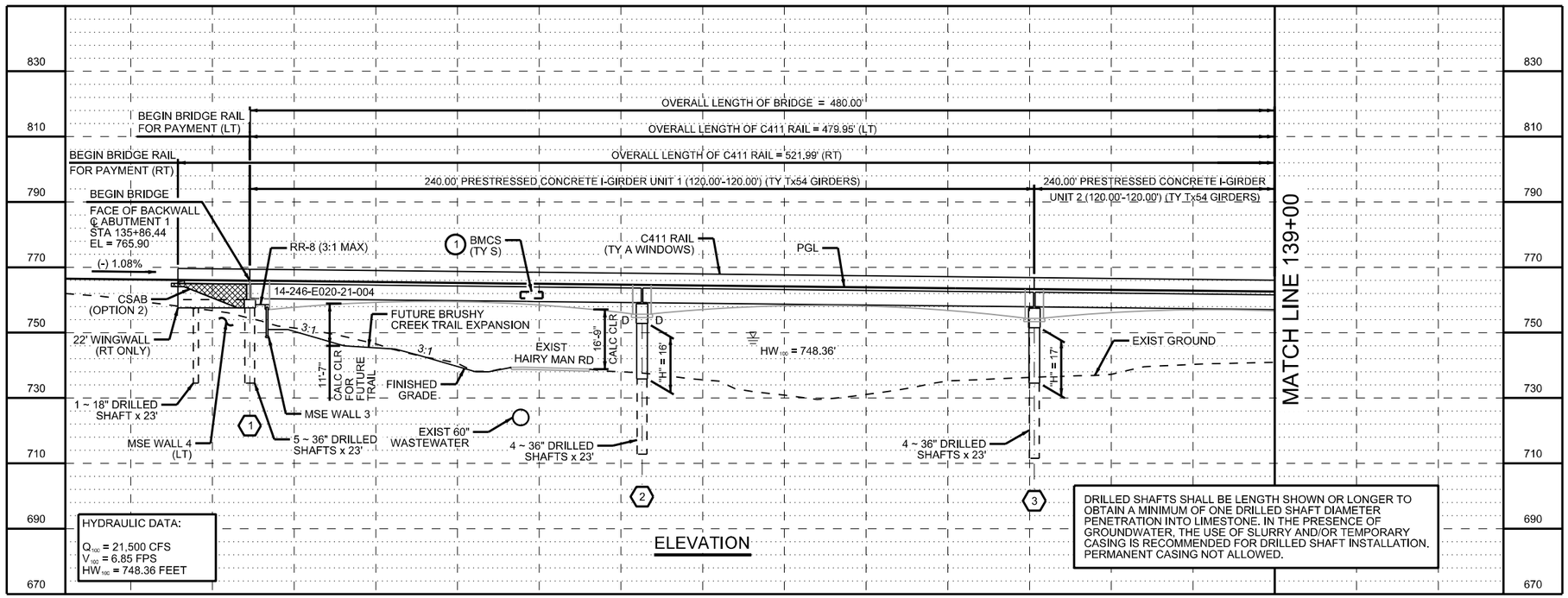

ELEVATION

HYDRAULIC DATA:
Q_{100} = 21,500 CFS
V_{100} = 6.85 FPS
HW_{100} = 748.36 FEET

DRILLED SHAFTS SHALL BE LENGTH SHOWN OR LONGER TO OBTAIN A MINIMUM OF ONE DRILLED SHAFT DIAMETER PENETRATION INTO LIMESTONE. IN THE PRESENCE OF GROUNDWATER, THE USE OF SLURRY AND/OR TEMPORARY CASING IS RECOMMENDED FOR DRILLED SHAFT INSTALLATION. PERMANENT CASING NOT ALLOWED.

HL93 LOADING

0 20 40 60 80

SCALE: 1"=40'

1. SEE BMCS(MOD) STANDARD FOR ATTACHMENT TO AESTHETIC PANEL.
2. CONDUIT FOR ILLUMINATION POLE BRACKET SHALL BE PLACED PRIOR TO REINFORCED CONCRETE SLAB POUR.
3. 18" PVC PIPE SHALL BE FILLED WITH LOW STRENGTH FLOWABLE FILL PRIOR TO PLACEMENT OF DRILLED SHAFTS AND SHALL BE SUBSIDIARY TO TXDOT ITEM 496.

WYOMING SPRINGS
SEGMENT 1
ROUND ROCK, TX

ROUND ROCK, TEXAS

AGUIRRE & FIELDS
ENGINEERING INNOVATORS
TBPE FIRM REGISTRATION # 739

No.	Date	Revision Description

STATE OF TEXAS
RYAN J. WILLIAMS
110418
LICENSED
PROFESSIONAL ENGINEER
4/20/2023

100% SUBMITTAL

Project No.:	36179
Issued:	4/20/2023
Drawn By:	QBH
Checked By:	RJW
Scale:	

Sheet Title
SB WYOMING SPRINGS AT BRUSHY CREEK BRIDGE LAYOUT
SHEET 01 OF 02

262
Sheet Number

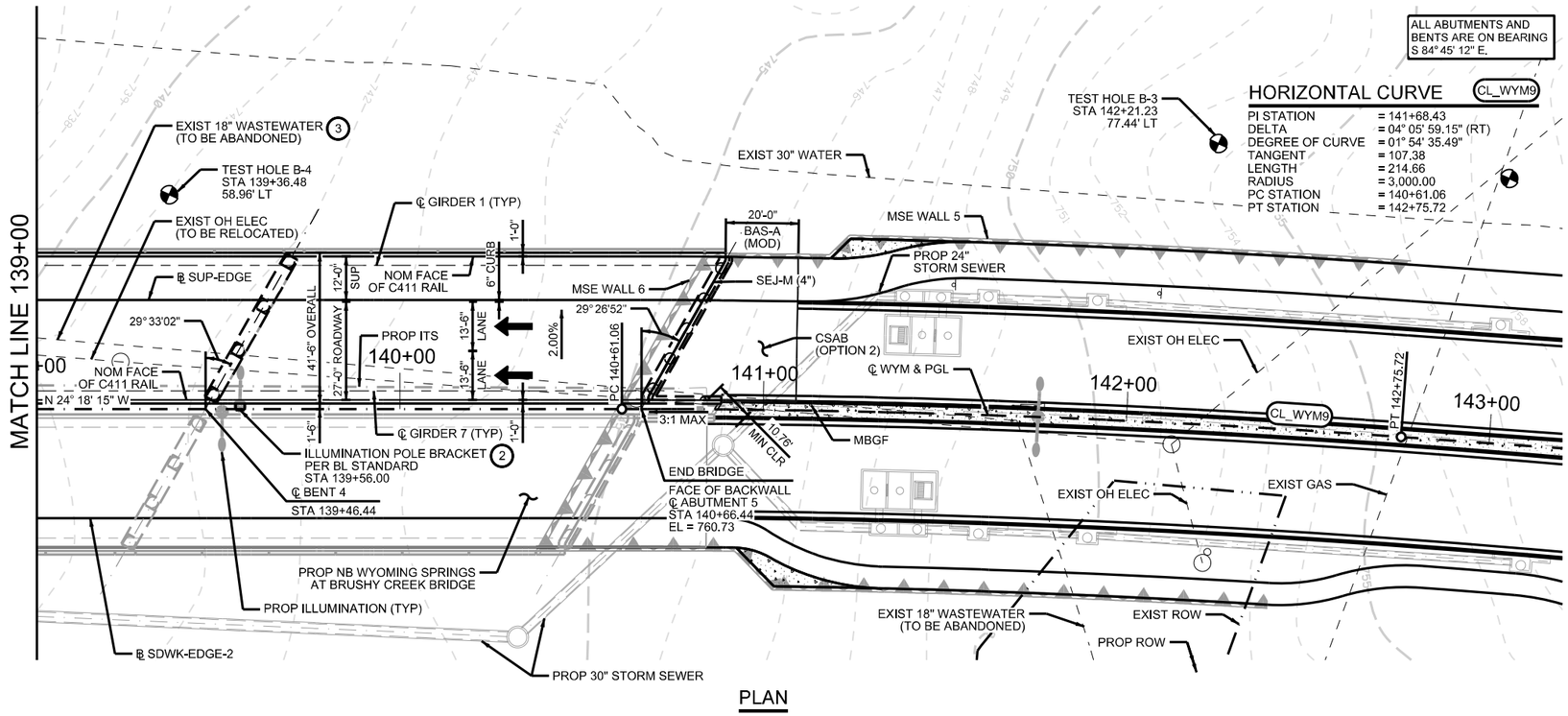

PLAN

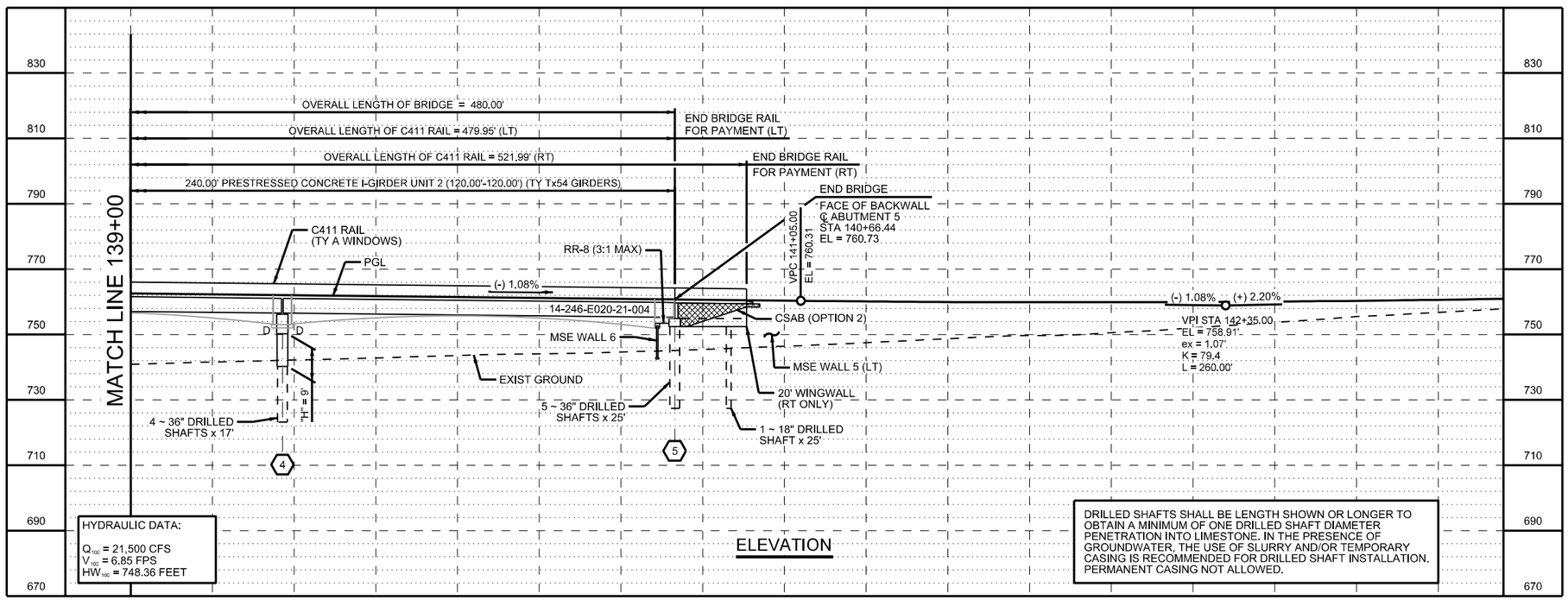

ELEVATION

HYDRAULIC DATA:

Q_{100} = 21,500 CFS
V_{100} = 6.85 FPS
HW_{100} = 748.36 FEET

DRILLED SHAFTS SHALL BE LENGTH SHOWN OR LONGER TO OBTAIN A MINIMUM OF ONE DRILLED SHAFT DIAMETER PENETRATION INTO LIMESTONE. IN THE PRESENCE OF GROUNDWATER, THE USE OF SLURRY AND/OR TEMPORARY CASING IS RECOMMENDED FOR DRILLED SHAFT INSTALLATION. PERMANENT CASING NOT ALLOWED.

0 20 40 60 80

SCALE: 1"=40'

GENERAL NOTES:
1. REFER TO BRIDGE LAYOUT SHEET 01 OF 02 FOR GENERAL NOTES.

2 CONDUIT FOR ILLUMINATION POLE BRACKET SHALL BE PLACED PRIOR TO REINFORCED CONCRETE SLAB POUR.

3 18" PVC PIPE SHALL BE FILLED WITH LOW STRENGTH FLOWABLE FILL PRIOR TO PLACEMENT OF DRILLED SHAFTS AND SHALL BE SUBSIDIARY TO TXDOT ITEM 496.

HL93 LOADING

WYOMING SPRINGS
SEGMENT 1
ROUND ROCK, TX

ROUND ROCK, TEXAS

AGUIRRE & FIELDS
ENGINEERING INNOVATORS
TBPE FIRM REGISTRATION # 739

Revision No.	Date	Description

STATE OF TEXAS
RYAN J. WILLIAMS
110418
LICENSED
PROFESSIONAL ENGINEER
4/20/2023

100% SUBMITTAL

Project No.:	36179
Issued:	4/20/2023
Drawn By:	QBH
Checked By:	RJW
Scale:	

Sheet Title
SB WYOMING SPRINGS AT BRUSHY CREEK BRIDGE LAYOUT
SHEET 02 OF 02

263
Sheet Number

SUMMARY OF BRIDGE QUANTITIES

ITEM	400	416	416	420	420	420	420	422	422	422	425	427	432	442	450	454
BID CODE	6005	6001	6004	6013	6029	6037	6225	6001	6013	6015	6039	6002	6002	6007	6036	6018
DESCRIPTION (NBI #: 14-246-E020-21-004)	CEM STABIL BKFL	DRILL SHAFT (18 IN)	DRILL SHAFT (36 IN)	CL C CONC (ABUT) (1)	CL C CONC (CAP) (1)	CL C CONC (COLUMN)	CL H CONC (FASCIA PANEL) (2)	REINF CONC SLAB	BRIDGE SIDEWALK	APPROACH SLAB	PRESTR CONC GIRDER (TX54)	CONCRETE PAINT FINISH	RIPRAP (CONC) (5 IN)	STR STEEL (MISC NON - BRIDGE) (3)	RAIL (TY C411)	SEALED EXPANSION JOINT (4 IN) (SEJ-M)
UNIT	CY	LF	LF	CY	CY	CY	CY	SF	SF	CY	LF	SF	CY	LB	LF	LF
ABUTMENTS 1 & 5	244.0	48	240	62.9					765	100.5			6		42	
BENTS 2-4			252		105.9	65.9						4,190				
2 ~ 240.00' PRESTRESSED CONCRETE I-GIRDER UNITS							97.9	19,920	6,480		3,345.72	21,270		574.5	959.9	96
TOTAL	244.0	48	492	62.9	105.9	65.9	97.9	19,920	7,245	100.5	3,345.72	25,460	6	574.5	1,001.9	96

(1) QUANTITY INCLUDES SHEAR KEYS

(2) QUANTITY FOR AESTHETIC PANELS

(3) QUANTITY FOR BRIDGE SIDEWALK EXPANSION JOINT COVER PLATE

BEARING SEAT ELEVATIONS

	BEAM 1	BEAM 2	BEAM 3	BEAM 4	BEAM 5	BEAM 6	BEAM 7
BENT 1 (FWD)	759.112	759.263	759.413	759.563	759.713	759.863	760.013
	BEAM 1	BEAM 2	BEAM 3	BEAM 4	BEAM 5	BEAM 6	BEAM 7
BENT 2 (BK)	757.841	757.991	758.141	758.291	758.442	758.592	758.742
(FWD)	757.819	757.970	758.120	758.270	758.420	758.570	758.720
	BEAM 1	BEAM 2	BEAM 3	BEAM 4	BEAM 5	BEAM 6	BEAM 7
BENT 3 (BK)	756.546	756.697	756.847	756.997	757.147	757.297	757.447
(FWD)	756.525	756.675	756.825	756.975	757.126	757.276	757.426
	BEAM 1	BEAM 2	BEAM 3	BEAM 4	BEAM 5	BEAM 6	BEAM 7
BENT 4 (BK)	755.252	755.402	755.552	755.702	755.853	756.003	756.153
(FWD)	755.230	755.381	755.531	755.681	755.831	755.981	756.131
	BEAM 1	BEAM 2	BEAM 3	BEAM 4	BEAM 5	BEAM 6	BEAM 7
BENT 5 (BK)	753.961	754.110	754.260	754.410	754.560	754.710	754.860

HL93 LOADING

WYOMING SPRINGS
SEGMENT 1
ROUND ROCK, TX

AGUIRRE & FIELDS
ENGINEERING INNOVATORS
TBPE FIRM REGISTRATION # 739

Revision No.	Date	Description

STATE OF TEXAS
RYAN J. WILLIAMS
110418
LICENSED
PROFESSIONAL ENGINEER
4/17/2023

100% SUBMITTAL

Project No.:	36179
Issued:	4/17/2023
Drawn By:	QBH
Checked By:	RJW
Scale:	

Sheet Title
SB WYOMING SPRINGS AT BRUSHY CREEK ESTIMATED QUANTITIES & BRG SEAT ELEVATIONS

264
Sheet Number

AUSTIN OFFICE
9101 Burnet Rd
Austin, TX 78758
Ph: 512.451.6233
Fax: 512.451.6262
4/17/2023 12:10:41 PM
USER: default
CITY OF ROUND ROCK
Drafter: DALLAS
I:\2017\36179\CAD\Sheets\Estimated Quantities.dwg

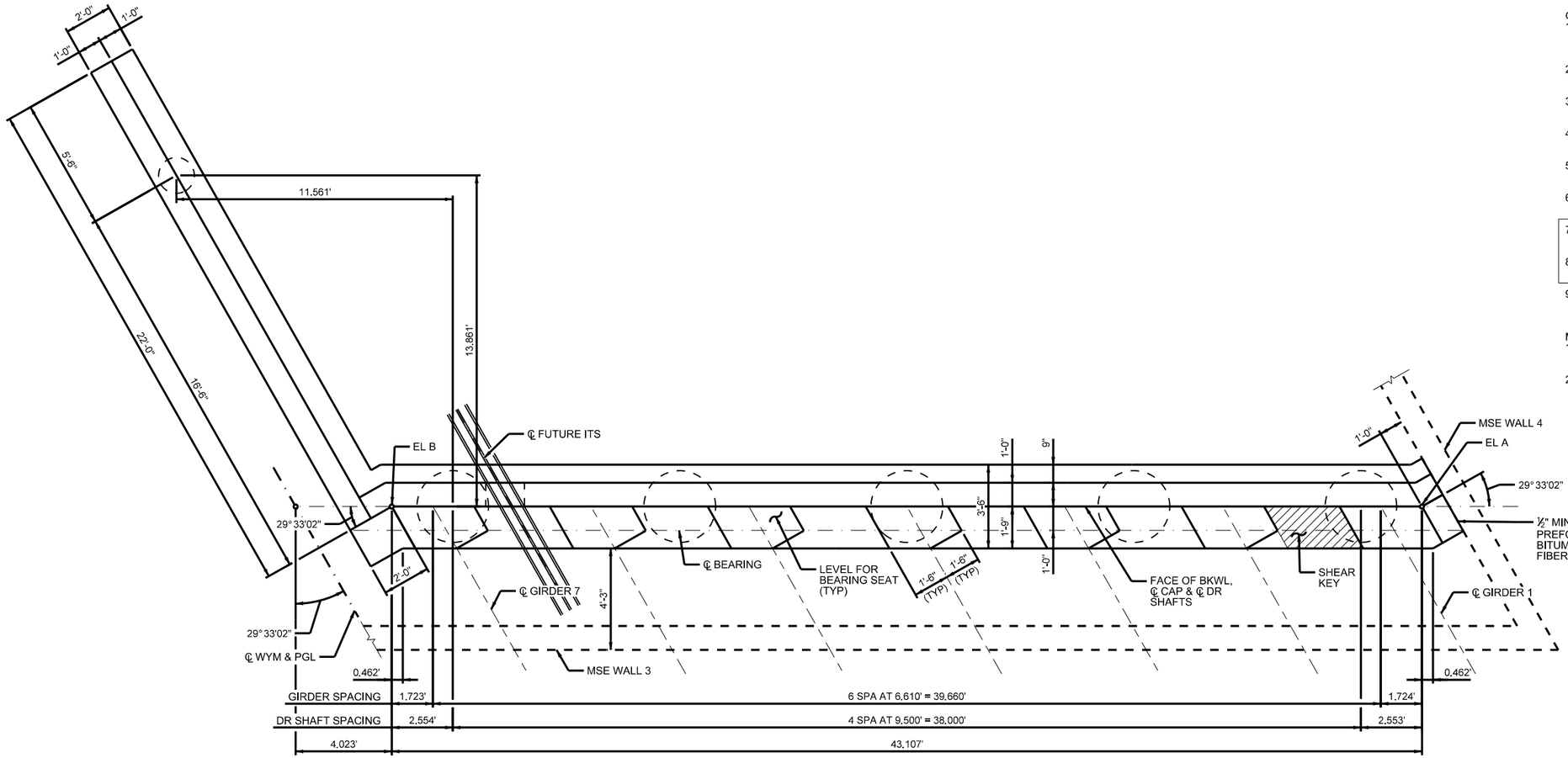

PLAN

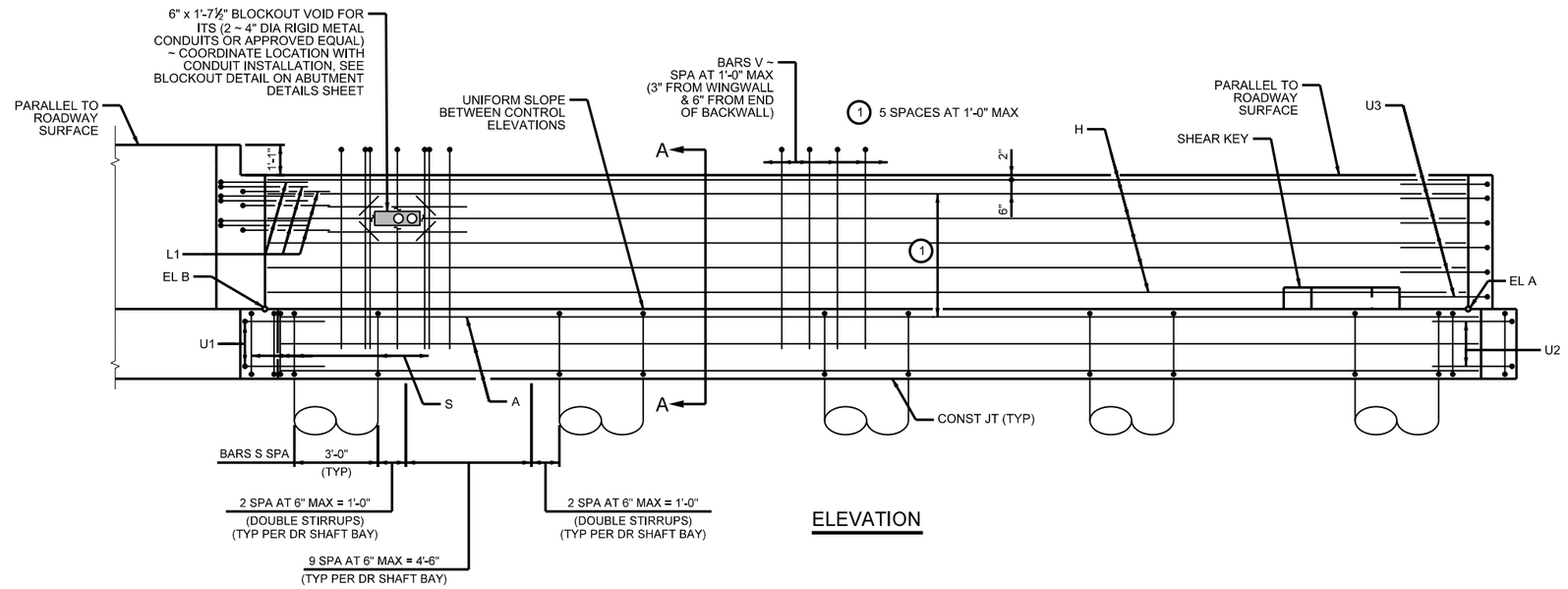

ELEVATION

GENERAL NOTES:
1. DESIGNED IN ACCORDANCE WITH AASHTO LRFD BRIDGE DESIGN SPECIFICATIONS, 9TH EDITION (2020).
2. SEE BRIDGE LAYOUT FOR FOUNDATION TYPE, SIZE, AND LENGTH.
3. SEE COMMON FOUNDATION DETAILS STANDARD, FD(MOD), FOR ALL FOUNDATION DETAILS AND NOTES.
4. SEE CONCRETE RIPRAP (CRR) STANDARD FOR RIPRAP ATTACHMENT DETAILS.
5. SEE TYPE C411 RAIL STANDARD FOR RAIL ANCHORAGE IN WINGWALLS.
6. SEE SHEAR KEY DETAILS STANDARD, IGSK, FOR ALL SHEAR KEY DETAILS AND NOTES.
7. COVER DIMENSIONS ARE CLEAR DIMENSIONS, UNLESS NOTED OTHERWISE.
8. REINFORCING BAR DIMENSIONS ARE OUT-TO-OUT OF BAR.
9. CALCULATED FOUNDATION LOADS:
   ABUTMENT 1: 145 TONS/DR SH.
   ABUTMENT 5: 145 TONS/DR SH.

MATERIAL NOTES:
1. PROVIDE CLASS C CONCRETE STRENGTH (f'c = 3600 PSI).
2. PROVIDE GRADE 60 REINFORCING STEEL.

HL93 LOADING

CONTROL ELEVATIONS

ABUT	EL A	EL B
1	758.96	759.94

WYOMING SPRINGS
SEGMENT 1
ROUND ROCK, TX

ROUND ROCK, TEXAS

AGUIRRE & FIELDS
ENGINEERING INNOVATORS
TBPE FIRM REGISTRATION # 739

Revision No.	Date	Description

STATE OF TEXAS
RYAN J. WILLIAMS
110418
LICENSED
PROFESSIONAL ENGINEER
4/17/2023

100% SUBMITTAL

Project No.:	36179
Issued:	3/30/2023
Drawn By:	QBH
Checked By:	RJW
Scale:	

Sheet Title
SB WYOMING SPRINGS AT BRUSHY CREEK ABUTMENT 1

265
Sheet Number

GENERAL NOTES:
1. SEE ABUTMENT 1 SHEET FOR GENERAL NOTES.

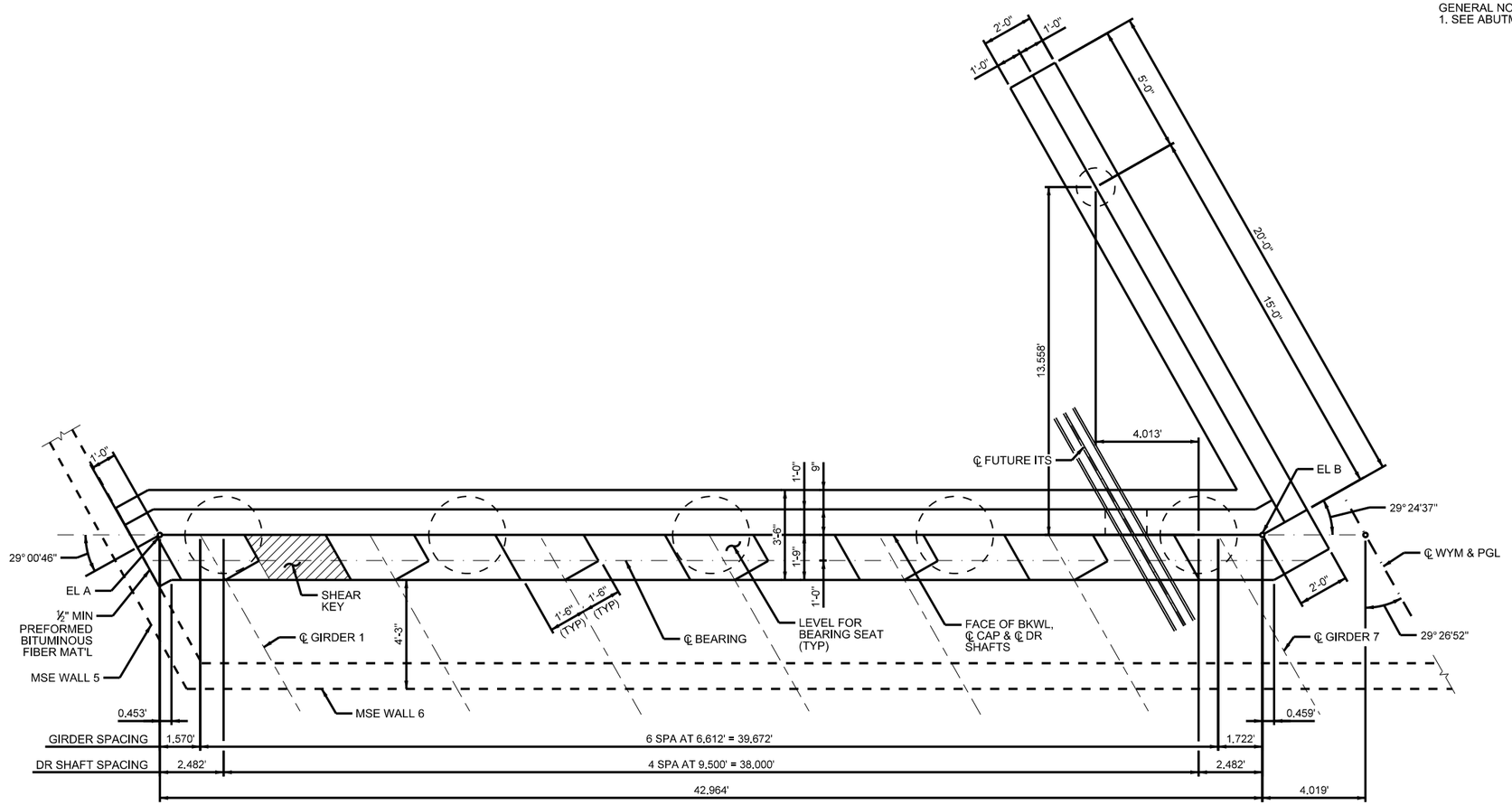

PLAN

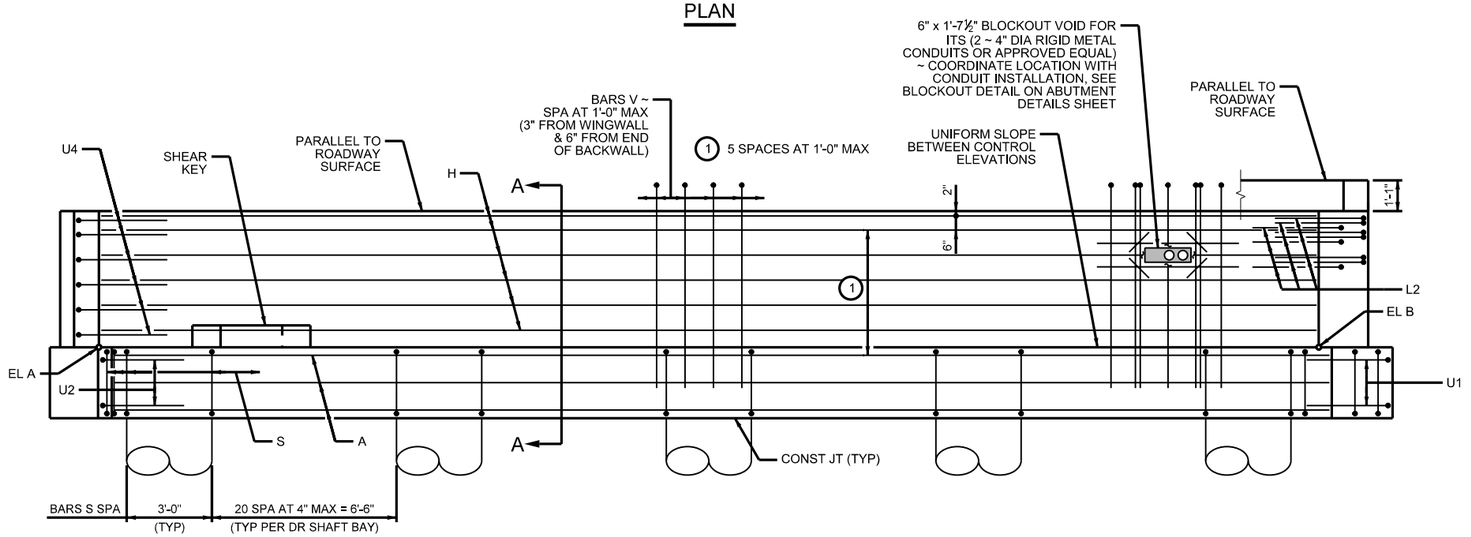

ELEVATION

HL93 LOADING

CONTROL ELEVATIONS

ABUT	EL A	EL B
5	753.79	754.76

WYOMING SPRINGS
SEGMENT 1
ROUND ROCK, TX

ROUND ROCK, TEXAS

AGUIRRE & FIELDS
ENGINEERING INNOVATORS
TBPE FIRM REGISTRATION # 739

Revision No.	Date	Description

STATE OF TEXAS
RYAN J. WILLIAMS
110418
LICENSED
PROFESSIONAL ENGINEER
4/17/2023

100% SUBMITTAL

Project No.:	36179
Issued:	3/30/2023
Drawn By:	QBH
Checked By:	RJW
Scale:	

Sheet Title
SB WYOMING SPRINGS AT BRUSHY CREEK ABUTMENT 5

266
Sheet Number

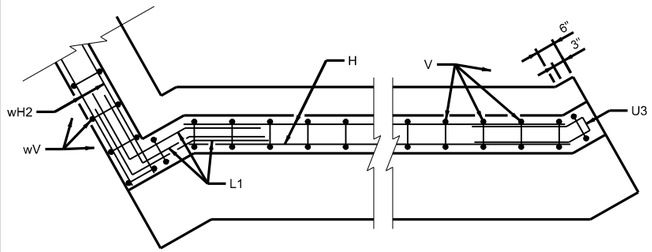

BACKWALL

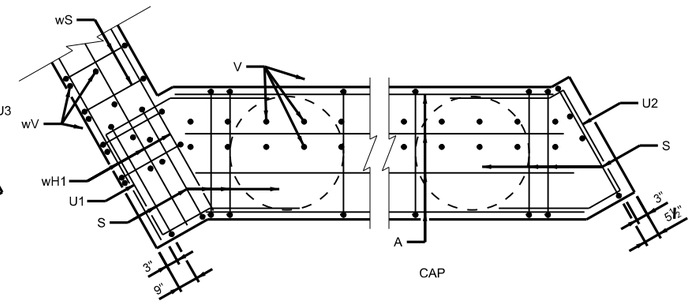

CAP

ABUTMENT 1 CORNER DETAILS

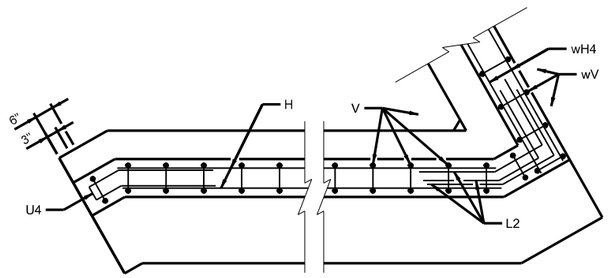

BACKWALL

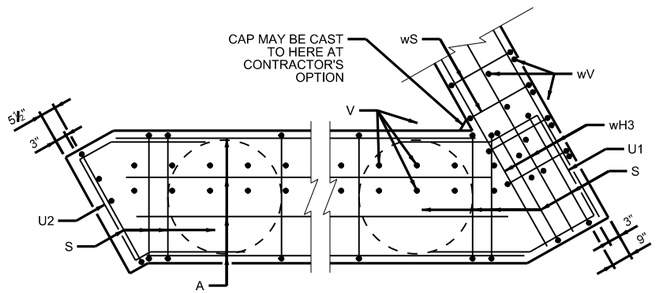

CAP

ABUTMENT 5 CORNER DETAILS

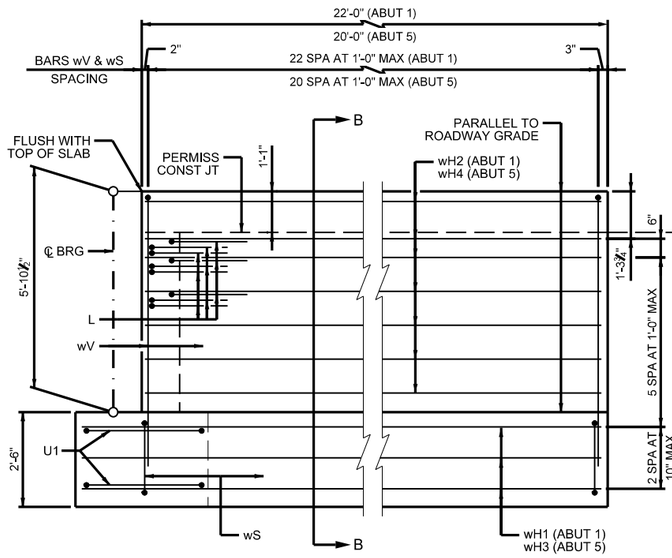

WINGWALL ELEVATION

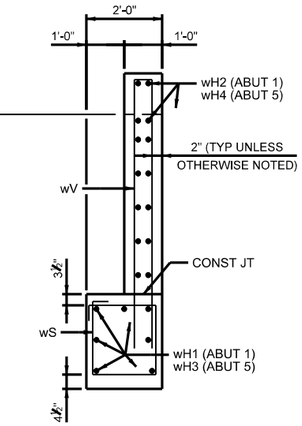

SECTION B-B

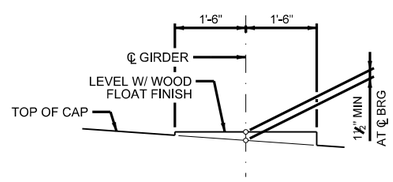

BEARING SEAT DETAIL

(BEARING SURFACE MUST BE CLEAN AND FREE OF ALL LOOSE MATERIAL BEFORE PLACING BEARING PAD.)

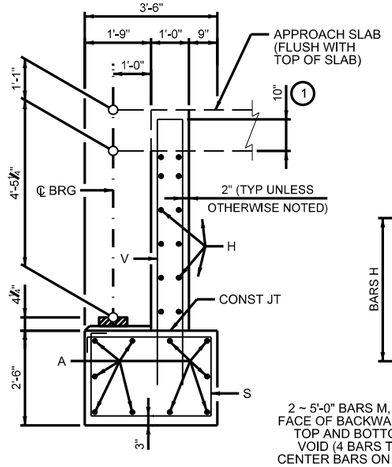

SECTION A-A

GENERAL NOTES:
1. SEE ABUTMENT 1 SHEET FOR GENERAL NOTES.

(1) INCREASE AS REQUIRED TO MAINTAIN 3" FROM FINISHED GRADE

(2) 1" TYP, ¾" MIN CLEARANCE BETWEEN DUCTS

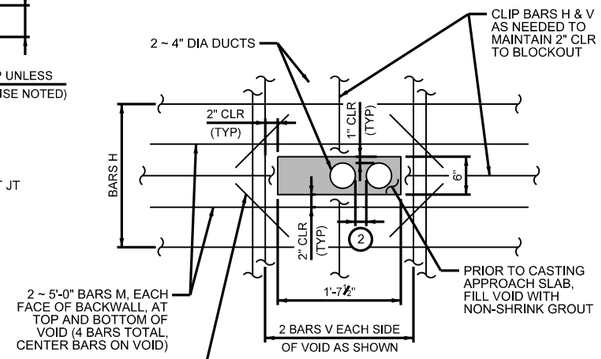

BLOCKOUT DETAIL

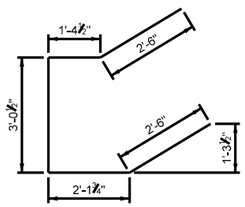

BARS U1

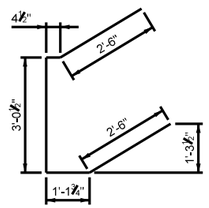

BARS U2

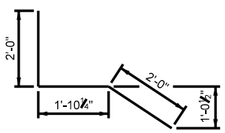

BARS L1

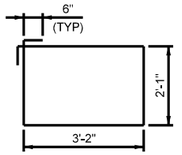

BARS S

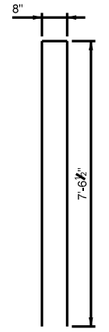

BARS V & wV

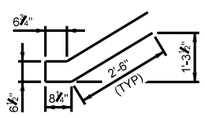

BARS U3

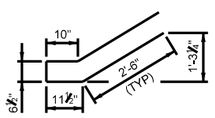

BARS U4

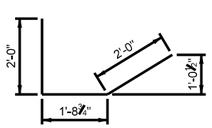

BARS L2

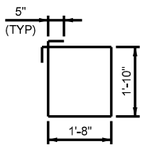

BARS wS

HL93 LOADING

WYOMING SPRINGS
SEGMENT 1
ROUND ROCK, TX

ROUND ROCK, TEXAS

AGUIRRE & FIELDS
ENGINEERING INNOVATORS
TBPE FIRM REGISTRATION # 739

Revision No.	Date	Description

STATE OF TEXAS
RYAN J. WILLIAMS
110418
LICENSED
PROFESSIONAL ENGINEER
4/17/2023

100% SUBMITTAL

Project No.:	36179
Issued:	3/30/2023
Drawn By:	QBH
Checked By:	RJW
Scale:	

Sheet Title
SB WYOMING SPRINGS AT BRUSHY CREEK ABUTMENT DETAILS

267
Sheet Number

NORTH OFFICE
AUSTIN, TEXAS
Date: 3/30/2023
File: 1811-Cam-M
1811-Cam-M_Abutments.dwg
User: QBH
CITY OF ROUND ROCK
Plotted: 3/30/2023 4:29:19 PM
By: QBH
USER: default

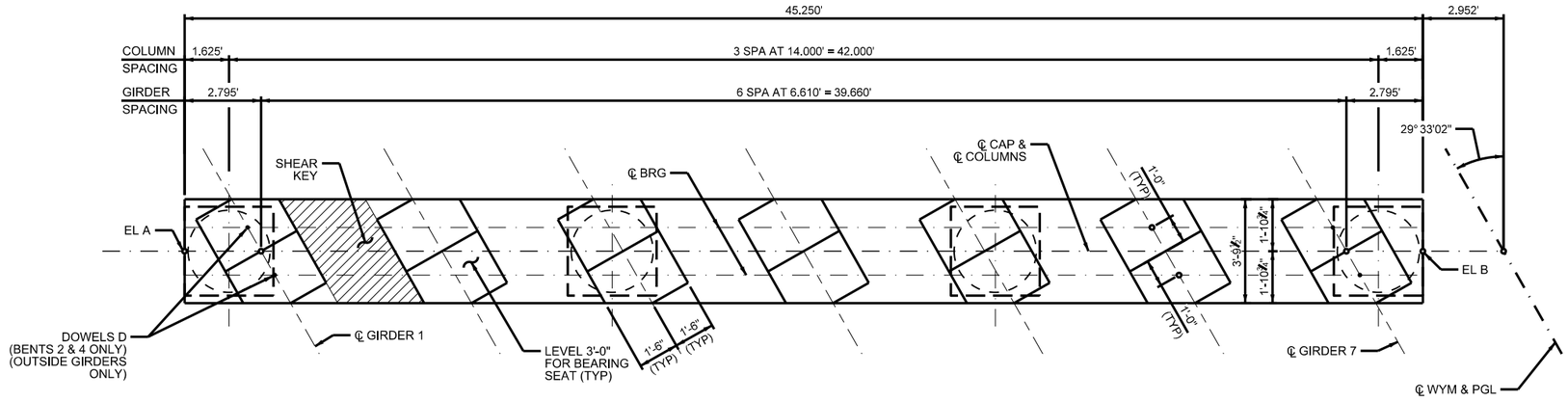

PLAN

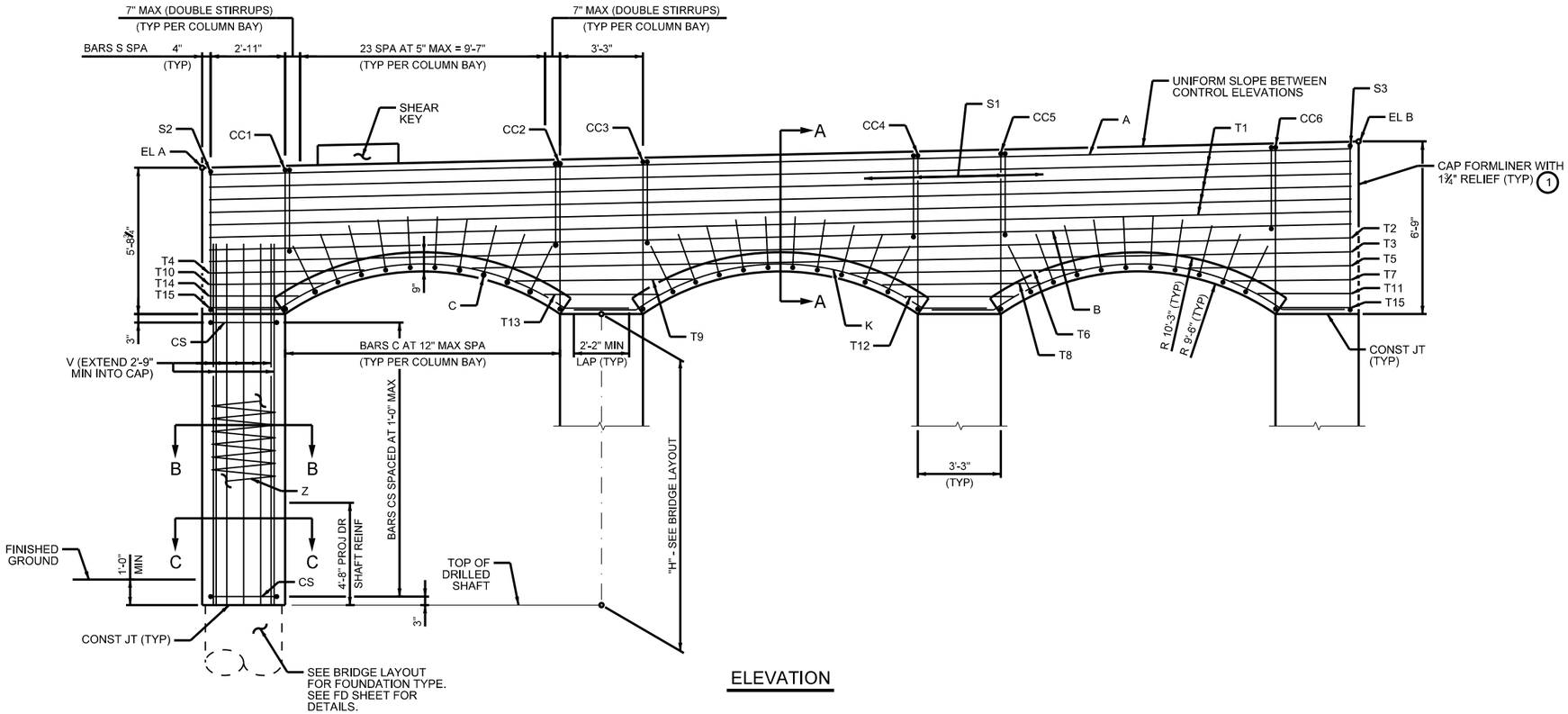

ELEVATION

GENERAL NOTES:
1. DESIGNED IN ACCORDANCE WITH AASHTO LRFD BRIDGE DESIGN SPECIFICATIONS, 9TH EDITION (2020).
2. SEE BRIDGE LAYOUT FOR FOUNDATION TYPE, SIZE, AND LENGTH.
3. SEE COMMON FOUNDATION DETAILS STANDARD, FD(MOD), FOR ALL FOUNDATION DETAILS AND NOTES.
4. SEE SHEAR KEY DETAILS STANDARD, IGSK, FOR ALL SHEAR KEY DETAILS AND NOTES.
5. SEE "AESTHETIC DETAILS" SHEETS FOR AESTHETIC INFORMATION.
6. COVER DIMENSIONS ARE CLEAR DIMENSIONS, UNLESS NOTED OTHERWISE.
7. REINFORCING BAR DIMENSIONS ARE OUT-TO-OUT OF BAR.
8. CALCULATED FOUNDATION LOADS:
   BENT 2: 290 TONS/DR SH.
   BENT 3: 295 TONS/DR SH.
   BENT 4: 285 TONS/DR SH.

MATERIAL NOTES:
1. PROVIDE CLASS C CONCRETE STRENGTH (f'c = 3600 PSI).
2. PROVIDE GRADE 60 REINFORCING STEEL.
3. GALVANIZE DOWEL BARS D.

(1) SEE AESTHETIC DETAILS SHEET.

HL93 LOADING

CONTROL ELEVATIONS

BENT	EL A	EL B
2	757.64	758.67
3	756.35	757.37
4	755.05	756.08

WYOMING SPRINGS
SEGMENT 1
ROUND ROCK, TX

ROUND ROCK, TEXAS

AGUIRRE & FIELDS
ENGINEERING INNOVATORS
TBPE FIRM REGISTRATION # 739

Revision No.	Date	Description

STATE OF TEXAS
RYAN J. WILLIAMS
110418
LICENSED PROFESSIONAL ENGINEER
4/17/2023

100% SUBMITTAL

Project No.:	36179
Issued:	3/30/2023
Drawn By:	QBH
Checked By:	RJW
Scale:	

Sheet Title
SB WYOMING SPRINGS AT BRUSHY CREEK BENTS 2-4

268
Sheet Number

NORTH OFFICE
AUSTIN, TEXAS
Date: 3/30/2023
User: ESCH
File: I:\811-Clients\CITY OF ROUND ROCK\811-Projects\811-Wyoming Springs\Segment 1\Bridge\Design\Sheets\USBS default.dgn
Time: 4:29:29 PM

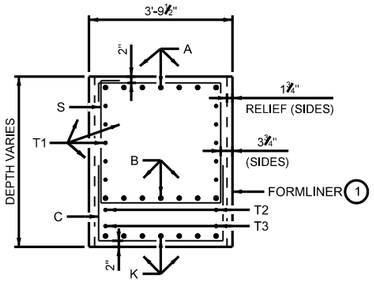

SECTION A-A

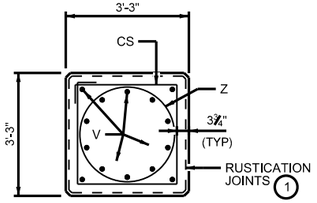

SECTION B-B

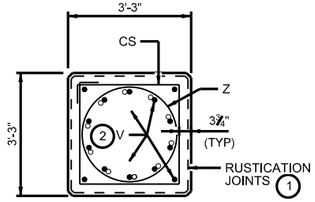

SECTION C-C

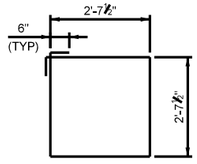

BARS CS

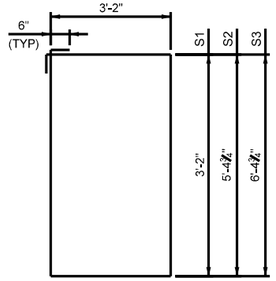

BARS S

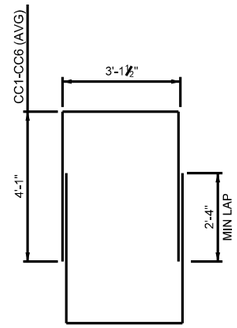

BARS CC

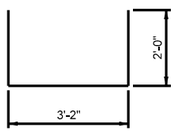

BARS C

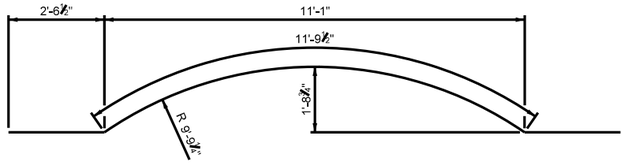

BARS K

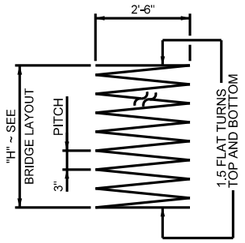

BARS Z

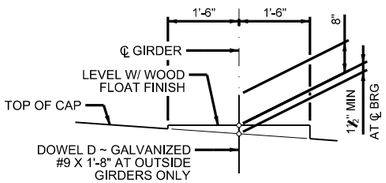

BEARING SEAT DETAIL

(BEARING SURFACE MUST BE CLEAN AND FREE OF ALL LOOSE MATERIAL BEFORE PLACING BEARING PAD.)

TABLE OF ESTIMATED CAP QUANTITIES BENT 2 & 4 (3)

BAR	NO	SIZE	LENGTH	WEIGHT
A	7	#11	44'-8"	1,660
B	7	#11	44'-8"	1,660
C	30	#5	7'-2"	225
D	4	#9	1'-8"	23
K	21	#6	16'-11"	533
S1	90	#5	13'-8"	1,283
S2	1	#5	18'-2"	19
S3	1	#5	20'-2"	21
CC1-CC6 (AVG)	12	#5	11'-4"	142
T1	10	#5	44'-8"	466
T2	2	#5	44'-8"	94
T3	2	#5	34'-5"	72
T4	2	#5	6'-0"	13
T5	2	#5	6'-5"	14
T6	2	#5	9'-1"	19
T7	2	#5	4'-8"	10
T8	2	#5	6'-2"	13
T9	2	#5	6'-11"	15
T10	2	#5	4'-6"	10
T11	2	#5	3'-8"	8
T12	2	#5	4'-3"	9
T13	2	#5	4'-6"	10
T14	2	#5	3'-6"	8
T15	4	#5	2'-9"	12
REINFORCING STEEL			LB	6,339
CLASS "C" CONC (CAP)			CY	35.3

TABLE OF ESTIMATED CAP QUANTITIES BENT 3

BAR	NO	SIZE	LENGTH	WEIGHT
A	7	#11	44'-8"	1,660
B	7	#11	44'-8"	1,660
C	30	#5	7'-2"	225
K	21	#6	16'-11"	533
S1	90	#5	13'-8"	1,283
S2	1	#5	18'-2"	19
S3	1	#5	20'-2"	21
CC1-CC6 (AVG)	12	#5	11'-4"	142
T1	10	#5	44'-8"	466
T2	2	#5	44'-8"	94
T3	2	#5	34'-5"	72
T4	2	#5	6'-0"	13
T5	2	#5	6'-5"	14
T6	2	#5	9'-1"	19
T7	2	#5	4'-8"	10
T8	2	#5	6'-2"	13
T9	2	#5	6'-11"	15
T10	2	#5	4'-6"	10
T11	2	#5	3'-8"	8
T12	2	#5	4'-3"	9
T13	2	#5	4'-6"	10
T14	2	#5	3'-6"	8
T15	4	#5	2'-9"	12
REINFORCING STEEL			LB	6,316
CLASS "C" CONC (CAP)			CY	35.3

TABLE OF ESTIMATED COLUMN QUANTITIES (4)

BENT	"H"	BARS V 56 ~ #11		BARS Z 4 ~ #4		BARS CS #5 AT 1-0" MAX			REINF STEEL	CLASS "C" CONC (COL)
NO.	HEIGHT	LENGTH	WEIGHT	LENGTH	WEIGHT	NO.	LENGTH	WEIGHT	LB	CY
2	16	18'-9"	5,579	526'-6"	1407	68	11'-6"	816	7,801	25.1
3	17	19'-9"	5,876	557'-11"	1491	72	11'-6"	864	8,231	26.7
4	9	11'-9"	3,496	306'-6"	819	40	11'-6"	480	4,795	14.1

GENERAL NOTES:
1. SEE BENTS 2-4 SHEET FOR GENERAL NOTES.

(1) SEE AESTHETIC DETAILS SHEET.

(2) LAP V BARS INSIDE SPIRAL WITH PROJECTED DRILLED SHAFT REINFORCEMENT.

(3) QUANTITIES SHOWN ARE FOR ONE BENT ONLY.

(4) REINFORCEMENT SHOWN IS BASED ON "H" VALUES SHOWN. FOR EACH LINEAR FOOT VARIATION IN COLUMN HEIGHT, MAKE THE FOLLOWING ADJUSTMENTS:
BARS V, ADD/SUBTRACT 1'-0"
BARS Z, ADD/SUBTRACT 31'-5"
BARS CS, ADD/SUBTRACT 4 BARS
REINFORCING STEEL, ADD/SUBTRACT 429 LB
CL C CONC (COL), ADD/SUBTRACT 1.6 CY

HL93 LOADING

WYOMING SPRINGS
SEGMENT 1
ROUND ROCK, TX

ROUND ROCK, TEXAS

AGUIRRE & FIELDS
ENGINEERING INNOVATORS
TBPE FIRM REGISTRATION # 739

Revision No.	Date	Description

STATE OF TEXAS
RYAN J. WILLIAMS
110418
LICENSED
PROFESSIONAL ENGINEER
4/17/2023

100% SUBMITTAL

Project No.:	36179
Issued:	3/30/2023
Drawn By:	QBH
Checked By:	RJW
Scale:	

Sheet Title
SB WYOMING SPRINGS AT BRUSHY CREEK BENT DETAILS

269
Sheet Number

NORTH OFFICE
NORTH OFFICE
USER=QBH
FILE=
CITY OF ROUND ROCK
USER=QBH
6:26:48 PM
3/30/2023

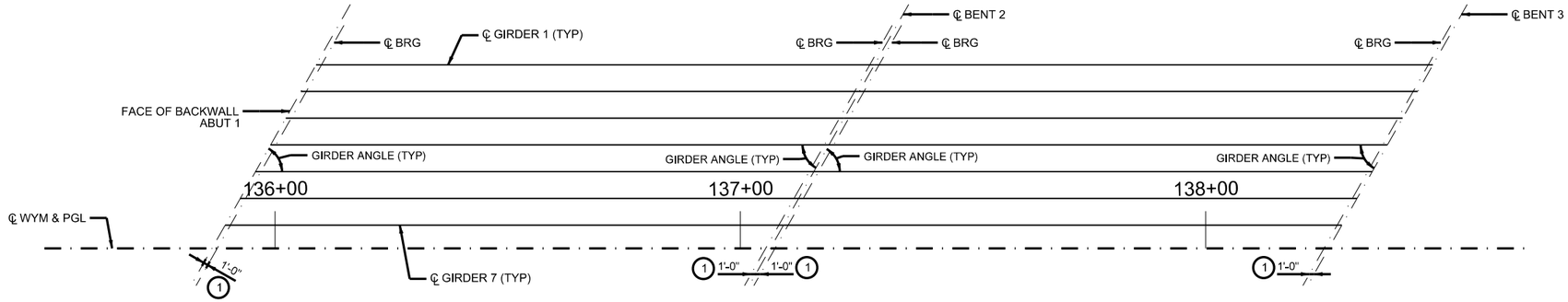

1. SEE IGEB(MOD) STANDARD FOR ORIENTATION OF DIMENSION.
2. GIRDER LENGTHS SHOWN ARE BOTTOM GIRDER FLANGE LENGTHS WITH ADJUSTMENTS MADE FOR GIRDER SLOPE.

SPAN 1
(Tx54 GIRDERS)

SPAN 2
(Tx54 GIRDERS)

BENT REPORT

ABUT NO. 1 (S 84 45 12.05 E)
DISTANCE BETWEEN STATION LINE AND GRDR 1 45.406 L

		GRDR SPAC. (C.L. ABUT)	GRDR ANGLE D	M	S
SPAN 1	GRDR 1	0.000	60	26	57
	GRDR 2	6.610	60	26	57
	GRDR 3	6.610	60	26	57
	GRDR 4	6.610	60	26	57
	GRDR 5	6.610	60	26	57
	GRDR 6	6.610	60	26	57
	GRDR 7	6.610	60	26	57
	TOTAL	39.660			

BENT NO. 2 (S 84 45 12.05 E)
DISTANCE BETWEEN STATION LINE AND GRDR 1 45.406 L

		GRDR SPAC. (C.L. BENT)	GRDR ANGLE D	M	S
SPAN 1	GRDR 1	0.000	60	26	57
	GRDR 2	6.610	60	26	57
	GRDR 3	6.610	60	26	57
	GRDR 4	6.610	60	26	57
	GRDR 5	6.610	60	26	57
	GRDR 6	6.610	60	26	57
	GRDR 7	6.610	60	26	57
	TOTAL	39.660			

BENT NO. 2 (S 84 45 12.05 E)
DISTANCE BETWEEN STATION LINE AND GRDR 1 45.406 L

		GRDR SPAC. (C.L. BENT)	GRDR ANGLE D	M	S
SPAN 2	GRDR 1	0.000	60	26	57
	GRDR 2	6.610	60	26	57
	GRDR 3	6.610	60	26	57
	GRDR 4	6.610	60	26	57
	GRDR 5	6.610	60	26	57
	GRDR 6	6.610	60	26	57
	GRDR 7	6.610	60	26	57
	TOTAL	39.660			

BENT NO. 3 (S 84 45 12.05 E)
DISTANCE BETWEEN STATION LINE AND GRDR 1 45.406 L

		GRDR SPAC. (C.L. BENT)	GRDR ANGLE D	M	S
SPAN 2	GRDR 1	0.000	60	26	57
	GRDR 2	6.610	60	26	57
	GRDR 3	6.610	60	26	57
	GRDR 4	6.610	60	26	57
	GRDR 5	6.610	60	26	57
	GRDR 6	6.610	60	26	57
	GRDR 7	6.610	60	26	57
	TOTAL	39.660			

GIRDER REPORT

GRDR REPORT, SPAN 1

	HORIZONTAL DISTANCE C-C BENT	C-C BRG.	TRUE DISTANCE BOT. BM. FLG.	(2) GRDR SLOPE
GRDR 1	120.000	117.850	119.47	-0.0108
GRDR 2	120.000	117.850	119.47	-0.0108
GRDR 3	120.000	117.850	119.47	-0.0108
GRDR 4	120.000	117.850	119.47	-0.0108
GRDR 5	120.000	117.850	119.47	-0.0108
GRDR 6	120.000	117.850	119.47	-0.0108
GRDR 7	120.000	117.850	119.47	-0.0108

GRDR REPORT, SPAN 2

	HORIZONTAL DISTANCE C-C BENT	C-C BRG.	TRUE DISTANCE BOT. BM. FLG.	(2) GRDR SLOPE
GRDR 1	120.000	118.000	119.51	-0.0108
GRDR 2	120.000	118.000	119.51	-0.0108
GRDR 3	120.000	118.000	119.51	-0.0108
GRDR 4	120.000	118.000	119.51	-0.0108
GRDR 5	120.000	118.000	119.51	-0.0108
GRDR 6	120.000	118.000	119.51	-0.0108
GRDR 7	120.000	118.000	119.51	-0.0108

HL93 LOADING

WYOMING SPRINGS
SEGMENT 1
ROUND ROCK, TX

ROUND ROCK, TEXAS

AGUIRRE & FIELDS
ENGINEERING INNOVATORS
TBPE FIRM REGISTRATION # 739

Revision No.	Date	Description

STATE OF TEXAS
RYAN J. WILLIAMS
110418
LICENSED
PROFESSIONAL ENGINEER
4/17/2023

100% SUBMITTAL

Project No.:	36179
Issued:	3/30/2023
Drawn By:	QBH
Checked By:	RJW
Scale:	

Sheet Title
SB WYOMING SPRINGS AT BRUSHY CREEK FRAMING PLAN SHEET 01 OF 02

270
Sheet Number

AUSTIN OFFICE
512.451.8037
TBPE FIRM # 739
3/30/2023
6:27:57 PM
USER: default
DWG: SHEET 1
CITY OF ROUND ROCK
\\AFI-Data\AFI Projects\36179 - City of Round Rock - Wyoming Springs\Drawings

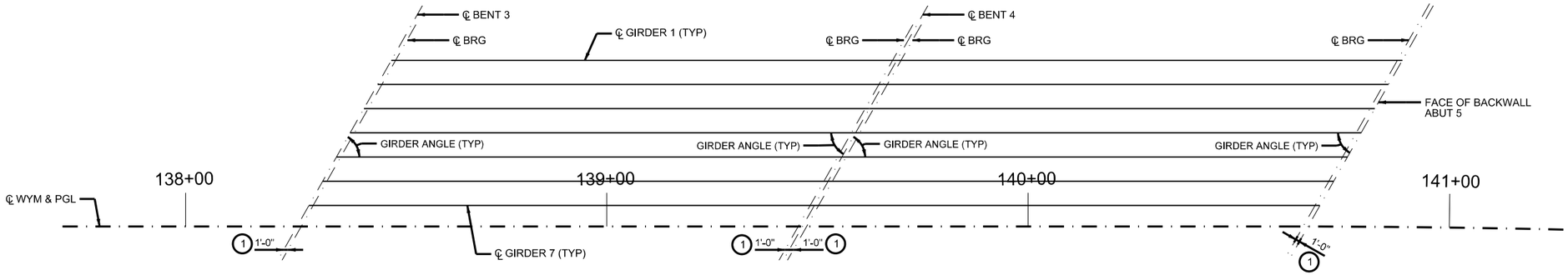

1. SEE IGEB(MOD) STANDARD FOR ORIENTATION OF DIMENSION.
2. GIRDER LENGTHS SHOWN ARE BOTTOM GIRDER FLANGE LENGTHS WITH ADJUSTMENTS MADE FOR GIRDER SLOPE.

SPAN 3
(Tx54 GIRDERS)

SPAN 4
(Tx54 GIRDERS)

BENT REPORT

BENT NO. 3 (S 84 45 12.05 E)
DISTANCE BETWEEN STATION LINE AND GRDR 1 45.406 L

		GRDR SPAC. (C.L. BENT)	GRDR ANGLE D	M	S
SPAN 3	GRDR 1	0.000	60	26	57
	GRDR 2	6.610	60	26	57
	GRDR 3	6.610	60	26	57
	GRDR 4	6.610	60	26	57
	GRDR 5	6.610	60	26	57
	GRDR 6	6.610	60	26	57
	GRDR 7	6.610	60	26	57
	TOTAL	39.660			

BENT NO. 4 (S 84 45 12.05 E)
DISTANCE BETWEEN STATION LINE AND GRDR 1 45.406 L

		GRDR SPAC. (C.L. BENT)	GRDR ANGLE D	M	S
SPAN 3	GRDR 1	0.000	60	26	57
	GRDR 2	6.610	60	26	57
	GRDR 3	6.610	60	26	57
	GRDR 4	6.610	60	26	57
	GRDR 5	6.610	60	26	57
	GRDR 6	6.610	60	26	57
	GRDR 7	6.610	60	26	57
	TOTAL	39.660			

BENT NO. 4 (S 84 45 12.05 E)
DISTANCE BETWEEN STATION LINE AND GRDR 1 45.406 L

		GRDR SPAC. (C.L. BENT)	GRDR ANGLE D	M	S
SPAN 4	GRDR 1	0.000	60	26	58
	GRDR 2	6.610	60	27	1
	GRDR 3	6.610	60	27	4
	GRDR 4	6.610	60	27	7
	GRDR 5	6.610	60	27	10
	GRDR 6	6.610	60	27	14
	GRDR 7	6.610	60	27	17
	TOTAL	39.660			

ABUT NO. 5 (S 84 45 12.05 E)
DISTANCE BETWEEN STATION LINE AND GRDR 1 45.412 L

		GRDR SPAC. (C.L. ABUT)	GRDR ANGLE D	M	S
SPAN 4	GRDR 1	0.000	60	26	58
	GRDR 2	6.612	60	27	1
	GRDR 3	6.612	60	27	4
	GRDR 4	6.612	60	27	7
	GRDR 5	6.612	60	27	10
	GRDR 6	6.612	60	27	14
	GRDR 7	6.612	60	27	17
	TOTAL	39.672			

GIRDER REPORT

GRDR REPORT, SPAN 3

	HORIZONTAL DISTANCE C-C BENT	C-C BRG.	TRUE DISTANCE BOT. BM. FLG.	(2) GRDR SLOPE
GRDR 1	120.000	118.000	119.51	-0.0108
GRDR 2	120.000	118.000	119.51	-0.0108
GRDR 3	120.000	118.000	119.51	-0.0108
GRDR 4	120.000	118.000	119.51	-0.0108
GRDR 5	120.000	118.000	119.51	-0.0108
GRDR 6	120.000	118.000	119.51	-0.0108
GRDR 7	120.000	118.000	119.51	-0.0108

GRDR REPORT, SPAN 4

	HORIZONTAL DISTANCE C-C BENT	C-C BRG.	TRUE DISTANCE BOT. BM. FLG.	(2) GRDR SLOPE
GRDR 1	120.003	117.853	119.47	-0.0108
GRDR 2	120.002	117.852	119.47	-0.0108
GRDR 3	120.001	117.851	119.47	-0.0108
GRDR 4	120.000	117.850	119.47	-0.0108
GRDR 5	119.998	117.849	119.47	-0.0108
GRDR 6	119.997	117.848	119.47	-0.0108
GRDR 7	119.996	117.847	119.47	-0.0108

HL93 LOADING

WYOMING SPRINGS
SEGMENT 1
ROUND ROCK, TX

ROUND ROCK, TEXAS

AGUIRRE & FIELDS
ENGINEERING INNOVATORS
TBPE FIRM REGISTRATION # 739

Revision No.	Date	Description

STATE OF TEXAS
RYAN J. WILLIAMS
110418
LICENSED
PROFESSIONAL ENGINEER
4/17/2023

100% SUBMITTAL

Project No.:	36179
Issued:	3/30/2023
Drawn By:	QBH
Checked By:	RJW
Scale:	

Sheet Title
SB WYOMING SPRINGS AT BRUSHY CREEK FRAMING PLAN SHEET 02 OF 02

271
Sheet Number

AUSTIN OFFICE
TBPE FIRM #739

3/30/2023 6:37:24 PM
User: DALLAS
CITY OF ROUND ROCK
USER: default
\\AFI-Dpw-04\
Projects\36179\CAD\Sheets\Framing\

TABLE OF DEAD LOAD DEFLECTIONS

SPAN NO.	GIRDER NO.	"A" FT	"B" FT
1	1 & 7	0.115	0.163
	2 - 6	0.104	0.147
2	1 & 7	0.116	0.164
	2 - 6	0.104	0.148

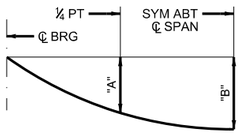

DEAD LOAD DEFLECTION DIAGRAM

NOTE: DEFLECTIONS SHOWN ARE DUE TO PRESTRESSED CONCRETE PANELS AND CAST-IN-PLACE SLAB ONLY. (Ec = 5000 KSI) ADJUST DEFLECTIONS BASED ON FIELD OBSERVATIONS AS NEEDED.

GENERAL NOTES:
1. DESIGNED IN ACCORDANCE WITH AASHTO LRFD BRIDGE DESIGN SPECIFICATIONS, 9TH EDITION (2020).
2. SEE STANDARDS PCP AND PCP-FAB FOR PANEL DETAILS NOT SHOWN.
3. SEE STANDARD IGTS FOR THICKENED SLAB END DETAILS.
4. SEE STANDARD IGMS FOR MISCELLANEOUS DETAILS.
5. SEE STANDARD SEJ-M FOR SEALED EXPANSION JOINT DETAILS.
6. SEE STANDARD BRSM FOR ADDITIONAL DETAILS AT SIDEWALKS.
7. SEE STANDARD BS-EJCP FOR SIDEWALK COVER PLATE DETAILS.
8. SEE STANDARD BL FOR BRIDGE LIGHTING DETAILS.
9. SEE APPLICABLE RAIL DETAILS FOR RAIL ANCHORAGE IN SLAB.
10. SEE "AESTHETIC DETAILS" SHEETS FOR AESTHETIC INFORMATION.
11. COVER DIMENSIONS ARE CLEAR DIMENSIONS UNLESS NOTED OTHERWISE.

MATERIAL NOTES:
1. PROVIDE CLASS S CONCRETE (f'c = 4000 PSI).
2. PROVIDE GRADE 60 REINFORCING STEEL.
3. PROVIDE BAR LAPS, WHERE REQUIRED, AS FOLLOWS: UNCOATED ~ #4 = 1'-7"
4. DEFORMED WELDED WIRE REINFORCEMENT (WWR)(ASTM A1064) OF EQUAL SIZE AND SPACING MAY BE SUBSTITUTED FOR BARS A, AA, D, OA, P, OR T UNLESS NOTED OTHERWISE.

(1) CONDUIT FOR ILLUMINATION POLE BRACKET SHALL BE PLACED PRIOR TO REINFORCED CONCRETE SLAB POUR.

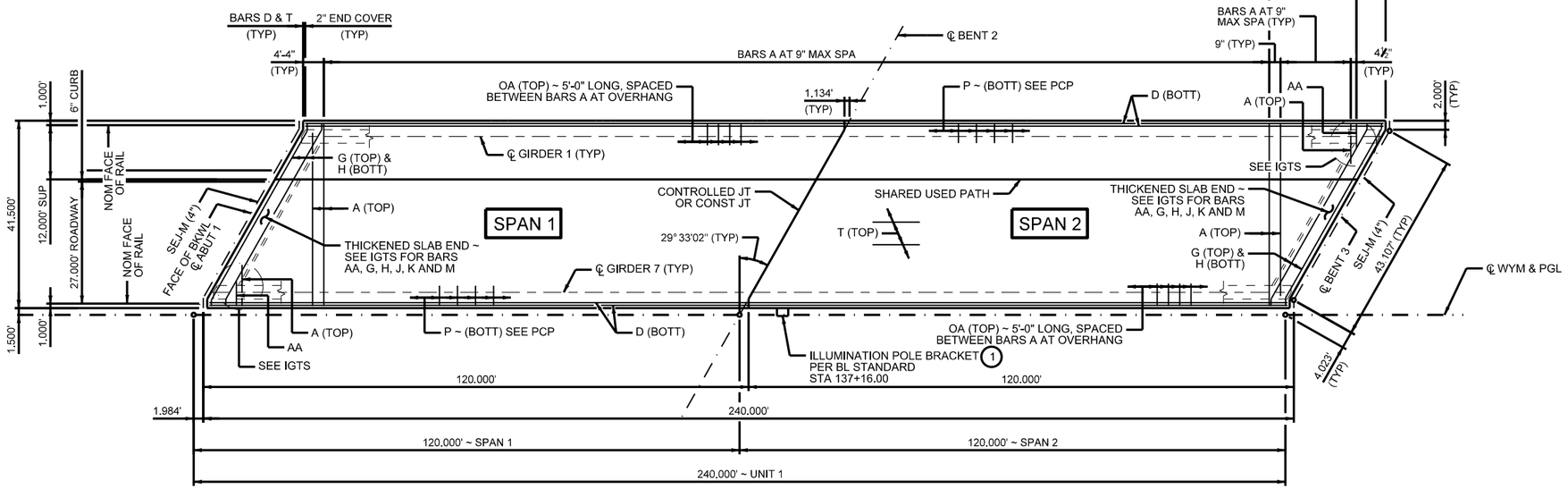

PLAN

HL93 LOADING

WYOMING SPRINGS
SEGMENT 1
ROUND ROCK, TX

AGUIRRE & FIELDS
ENGINEERING INNOVATORS
TBPE FIRM REGISTRATION # 739

Revision No.	Date	Description

STATE OF TEXAS
RYAN J. WILLIAMS
110418
LICENSED PROFESSIONAL ENGINEER
4/17/2023

100% SUBMITTAL

Project No.:	36179
Issued:	3/30/2023
Drawn By:	QBH
Checked By:	RJW
Scale:	

Sheet Title
SB WYOMING SPRINGS AT BRUSHY CREEK
240.00' PCGU 1
SHEET 01 OF 02

272
Sheet Number

TABLE OF SECTION DEPTHS

SPAN NO.	GIRDER NO.	"X" AT ℄ BRG (2)	"Y" AT ℄ BRG	"Z" AT ℄ SPAN (3)
1	1	1'-0 1/4"	5'-6 1/4"	9 5/8"
	2 - 3			9 1/2"
	4 - 6			10 1/2"
	7			10 3/8"
2	1	1'-0 1/4"	5'-6 1/4"	9 5/8"
	2 - 3			9 1/2"
	4 - 6			10 1/2"
	7			10 3/8"

TABLE OF ESTIMATED QUANTITIES

SPAN	REINF CONCRETE SLAB	REINF STEEL CONC SLAB (4)	BRIDGE SIDEWALK	REINF STEEL SIDEWALK (5)	PRESTR CONC GIRDERS (Tx54) (6)	TOTAL REINF STEEL
	SF	LB	SF	LB	LF	LB
1	4,980	11,454	1,620	3,564	836.29	15,018
2	4,980	11,454	1,620	3,564	836.57	15,018
TOTAL	9,960	22,908	3,240	7,128	1,672.86	30,036

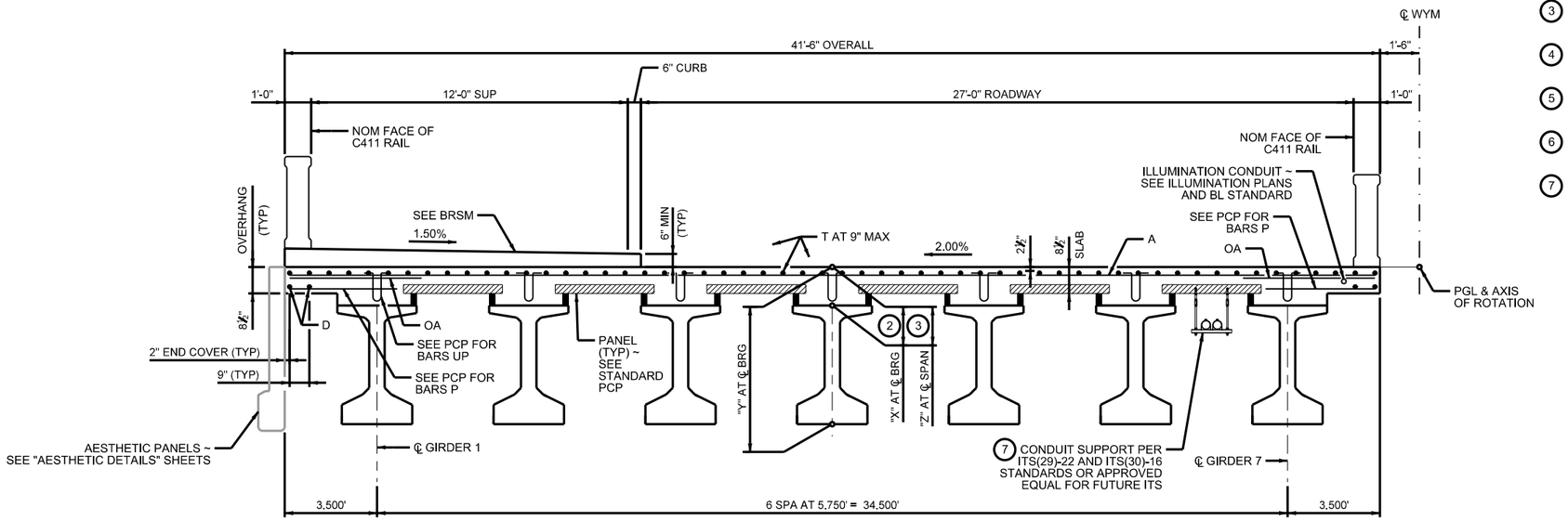

TYPICAL TRANSVERSE SECTION

GENERAL NOTES:
1. SEE SHEET 01 OF 02 FOR GENERAL NOTES.

(2) SEE STANDARD PCP FOR HAUNCH REINFORCING DETAIL.

(3) "Z" VALUE SHOWN IS AN APPROXIMATION BASED ON THEORETICAL GIRDER CAMBER, DEAD LOAD DEFLECTION, AND ROADWAY PROFILE.

(4) REINFORCING STEEL WEIGHT FOR CONCRETE SLAB IS CALCULATED USING AN APPROXIMATE FACTOR OF 2.3 LBS PER SQ FT.

(5) REINFORCING STEEL FOR SIDEWALK IS CALCULATED USING AN APPROXIMATE FACTOR OF 2.2 LBS PER SQ FT.

(6) GIRDER LENGTHS SHOWN ARE BOTTOM GIRDER FLANGE LENGTHS WITH ADJUSTMENTS MADE FOR GIRDER SLOPE.

(7) DESIGNED FOR A MAXIMUM LOAD OF 50 LB/FT (INCLUDES CONDUITS AND HANGERS).

BAR TABLE

BAR	SIZE
A	#4
AA	#5
D	#4
G	#4
H	#4
J	#4
K	#4
M	#4
OA	#5
P	#4
T	#4
UP	#4

HL93 LOADING

WYOMING SPRINGS
SEGMENT 1
ROUND ROCK, TX

ROUND ROCK, TEXAS

AGUIRRE & FIELDS
ENGINEERING INNOVATORS
TBPE FIRM REGISTRATION # 739

Revision No.	Date	Description

STATE OF TEXAS
RYAN J. WILLIAMS
110418
LICENSED
PROFESSIONAL ENGINEER
4/17/2023

100% SUBMITTAL

Project No.:	36179
Issued:	3/30/2023
Drawn By:	QBH
Checked By:	RJW
Scale:	

Sheet Title
SB WYOMING SPRINGS AT BRUSHY CREEK
240.00' PCGU 1
SHEET 02 OF 02

273
Sheet Number

AUSTIN OFFICE
(512) 451-8037
TBPE FIRM #739
10810 Dyer Rd
Austin, Texas 78748
Sheet1
CITY OF ROUND ROCK
USER: zeliott
6:27:54 PM
3/30/2023

TABLE OF DEAD LOAD DEFLECTIONS

SPAN NO.	GIRDER NO.	"A" FT	"B" FT
3	1 & 7	0.116	0.164
	2 - 6	0.104	0.148
4	1 & 7	0.115	0.163
	2 - 6	0.104	0.147

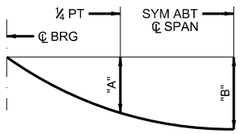

DEAD LOAD DEFLECTION DIAGRAM

NOTE: DEFLECTIONS SHOWN ARE DUE TO PRESTRESSED CONCRETE PANELS AND CAST-IN-PLACE SLAB ONLY. (Ec = 5000 KSI) ADJUST DEFLECTIONS BASED ON FIELD OBSERVATIONS AS NEEDED.

GENERAL NOTES:
1. DESIGNED IN ACCORDANCE WITH AASHTO LRFD BRIDGE DESIGN SPECIFICATIONS, 9TH EDITION (2020).
2. SEE STANDARDS PCP AND PCP-FAB FOR PANEL DETAILS NOT SHOWN.
3. SEE STANDARD IGTS FOR THICKENED SLAB END DETAILS.
4. SEE STANDARD IGMS FOR MISCELLANEOUS DETAILS.
5. SEE STANDARD SEJ-M FOR SEALED EXPANSION JOINT DETAILS.
6. SEE STANDARD BRSM FOR ADDITIONAL DETAILS AT SIDEWALKS.
7. SEE STANDARD BS-EJCP FOR SIDEWALK COVER PLATE DETAILS.
8. SEE STANDARD BL FOR BRIDGE LIGHTING DETAILS.
9. SEE APPLICABLE RAIL DETAILS FOR RAIL ANCHORAGE IN SLAB.
10. SEE "AESTHETIC DETAILS" SHEETS FOR AESTHETIC INFORMATION.
11. COVER DIMENSIONS ARE CLEAR DIMENSIONS UNLESS NOTED OTHERWISE.

MATERIAL NOTES:
1. PROVIDE CLASS S CONCRETE (f'c = 4000 PSI).
2. PROVIDE GRADE 60 REINFORCING STEEL.
3. PROVIDE BAR LAPS, WHERE REQUIRED, AS FOLLOWS: UNCOATED ~ #4 = 1'-7"
4. DEFORMED WELDED WIRE REINFORCEMENT (WWR)(ASTM A1064) OF EQUAL SIZE AND SPACING MAY BE SUBSTITUTED FOR BARS A, AA, D, OA, P, OR T UNLESS NOTED OTHERWISE.

(1) SEE BRIDGE DECK EDGE TRANSITION TABLE. BRIDGE RAIL SHALL MAINTAIN CONSTANT OFFSET FROM ALIGNMENT AND WILL DEVIATE FROM DECK EDGE IN THIS AREA TO LINE UP WITH RAIL ON RETAINING WALL COPING.

(2) CONDUIT FOR ILLUMINATION POLE BRACKET SHALL BE PLACED PRIOR TO REINFORCED CONCRETE SLAB POUR.

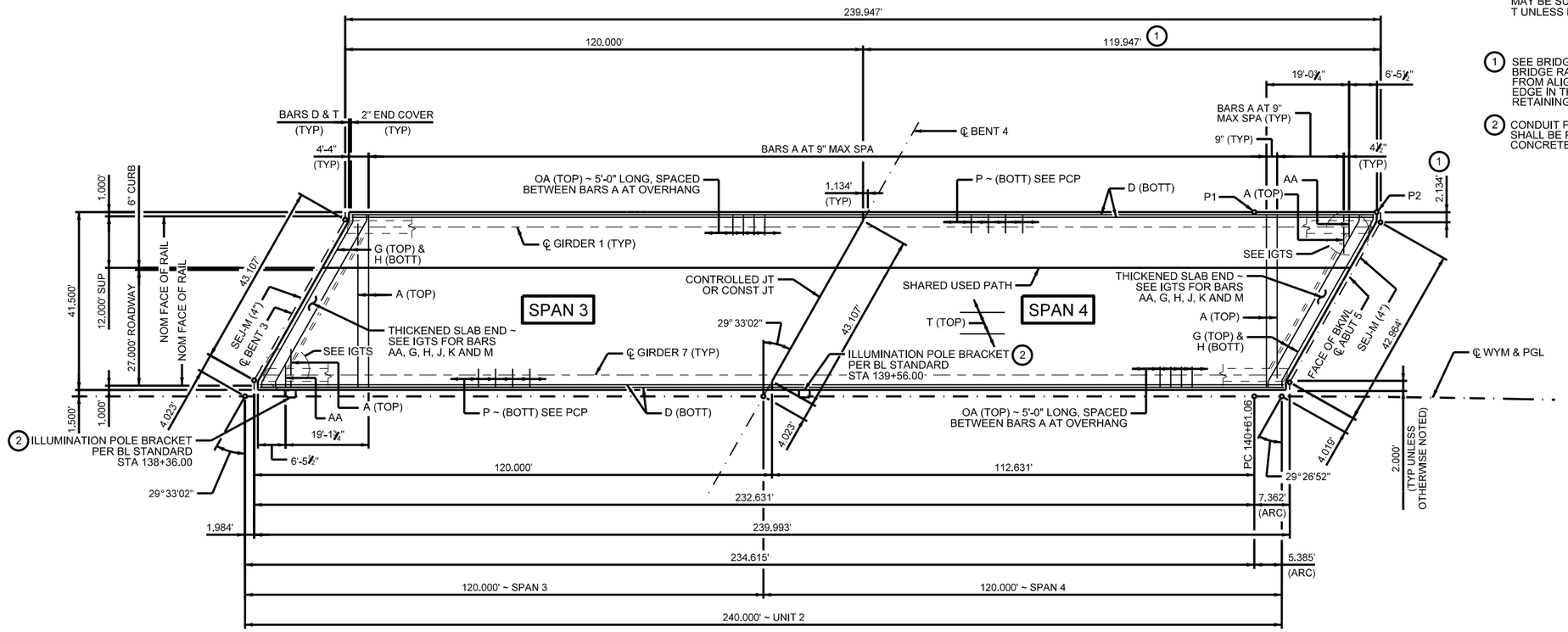

PLAN

BRIDGE DECK EDGE TRANSITION TABLE

LOCATION	STATION	OFFSET
P1	140+61.06	43.00'
P2	140+89.23	43.13'

HL93 LOADING

WYOMING SPRINGS
SEGMENT 1
ROUND ROCK, TX

ROUND ROCK, TEXAS

AGUIRRE & FIELDS
ENGINEERING INNOVATORS
TBPE FIRM REGISTRATION # 739

Revision No.	Date	Description

STATE OF TEXAS
RYAN J. WILLIAMS
110418
LICENSED
PROFESSIONAL ENGINEER
4/17/2023

100% SUBMITTAL

Project No.:	36179
Issued:	3/30/2023
Drawn By:	QBH
Checked By:	RJW
Scale:	

Sheet Title
SB WYOMING SPRINGS AT BRUSHY CREEK
240.00' PCGU 2
SHEET 01 OF 02

274
Sheet Number

AUSTIN OFFICE
AUSTIN, TEXAS
1911 Dyer Rd
Austin, TX 78704
Date:
3/30/2023
6:28:11 PM
USER: ddeluft
CITY OF ROUND ROCK

TABLE OF SECTION DEPTHS

SPAN NO.	GIRDER NO.	"X" AT ℄ BRG (3)	"Y" AT ℄ BRG	"Z" AT ℄ SPAN (4)
3	1	1'-0 1/4"	5'-6 1/4"	9 5/8"
	2 - 3			9 1/2"
	4 - 6			10 1/2"
	7			10 3/8"
4	1	1'-0 1/4"	5'-6 1/4"	9 5/8"
	2 - 3			9 1/2"
	4 - 6			10 1/2"
	7			10 3/8"

TABLE OF ESTIMATED QUANTITIES

SPAN	REINF CONCRETE SLAB	REINF STEEL CONC SLAB (5)	BRIDGE SIDEWALK	REINF STEEL SIDEWALK (6)	PRESTR CONC GIRDERS (Tx54) (7)	TOTAL REINF STEEL
	SF	LB	SF	LB	LF	LB
3	4,980	11,454	1,620	3,564	836.57	15,018
4	4,980	11,454	1,620	3,565	836.29	15,019
TOTAL	9,960	22,908	3,240	7,129	1,672.86	30,037

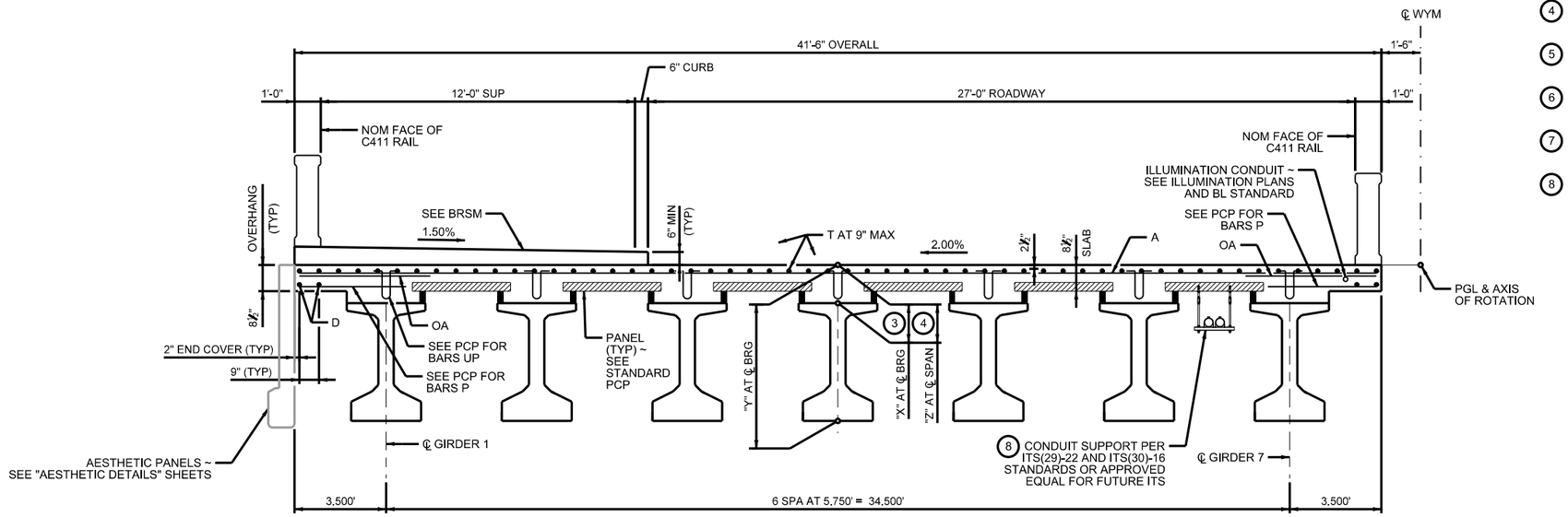

TYPICAL TRANSVERSE SECTION

GENERAL NOTES:
1. SEE SHEET 01 OF 02 FOR GENERAL NOTES.

(3) SEE STANDARD PCP FOR HAUNCH REINFORCING DETAIL.

(4) "Z" VALUE SHOWN IS AN APPROXIMATION BASED ON THEORETICAL GIRDER CAMBER, DEAD LOAD DEFLECTION, AND ROADWAY PROFILE.

(5) REINFORCING STEEL WEIGHT FOR CONCRETE SLAB IS CALCULATED USING AN APPROXIMATE FACTOR OF 2.3 LBS PER SQ FT.

(6) REINFORCING STEEL FOR SIDEWALK IS CALCULATED USING AN APPROXIMATE FACTOR OF 2.2 LBS PER SQ FT.

(7) GIRDER LENGTHS SHOWN ARE BOTTOM GIRDER FLANGE LENGTHS WITH ADJUSTMENTS MADE FOR GIRDER SLOPE.

(8) DESIGNED FOR A MAXIMUM LOAD OF 50 LB/FT (INCLUDES CONDUITS AND HANGERS).

BAR TABLE

BAR	SIZE
A	#4
AA	#5
D	#4
G	#4
H	#4
J	#4
K	#4
M	#4
OA	#5
P	#4
T	#4
UP	#4

HL93 LOADING

WYOMING SPRINGS
SEGMENT 1
ROUND ROCK, TX

ROUND ROCK, TEXAS

AGUIRRE & FIELDS
ENGINEERING INNOVATORS
TBPE FIRM REGISTRATION # 739

Revision No.	Date	Description

STATE OF TEXAS
RYAN J. WILLIAMS
110418
LICENSED
PROFESSIONAL ENGINEER
4/17/2023

100% SUBMITTAL

Project No.:	36179
Issued:	3/30/2023
Drawn By:	QBH
Checked By:	RJW
Scale:	

Sheet Title
SB WYOMING SPRINGS AT BRUSHY CREEK
240.00' PCGU 2
SHEET 02 OF 02

275
Sheet Number

AUSTIN OFFICE
(512) 451-8037
TBPE FIRM #739

10/13/2023 1:44:12 PM
M:\36179\Drawings\Bridge\Sheets\36179_BR_TYP_SECT.dgn
Sheet1
CITY OF ROUND ROCK
USER: rwilliams
6:28:24 PM
3/30/2023

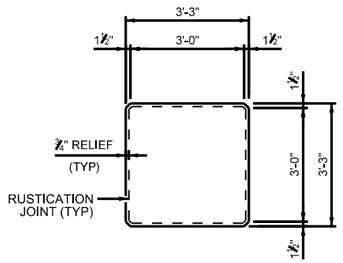

SECTION B-B

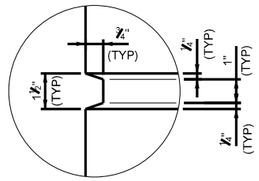

RUSTICATION JOINT DETAIL

RAIL NOTES:

1. PROVIDE TYPE A WINDOWS FOR C411 RAIL ON BRIDGE AND RETAINING WALLS.
2. FOLLOW GUIDANCE ON STANDARD C411 FOR NUMBER OF SPAN PILASTERS AND WINDOW PLACEMENT. CONTINUE PLACEMENT OF TYPE A WINDOWS BEYOND THE ABUTMENT PILASTERS AND TERMINATE RAIL AT RETAINING WALL ENDS WITH A BENT PILASTER. PLACE ABUTMENT PILASTERS ON WINGWALLS. NO METAL BEAM GUARD FENCE IS REQUIRED AT RAIL ENDS.
3. PROVIDE 1" INSET STAR IN PLACE OF BRONZE STAR AT INSIDE FACE OF ABUTMENT PILASTERS. MATCH STAR DIMENSIONS ON STANDARD C411.
4. INCLUDE CONSTRUCTION YEAR AT INSIDE FACE OF ABUTMENT PILASTERS AS SHOWN ON STANDARD C411.

MATERIAL NOTES:

1. PROVIDE CLASS H CONCRETE STRENGTH (f'c = 4,000 PSI) FOR PRECAST PANELS.
2. PROVIDE GRADE 60 REINFORCING STEEL.
3. ALL SURFACES SHALL RECEIVE A SURFACE AREA I, CLASS C FINISH IN ACCORDANCE WITH TXDOT ITEM 427 EXCEPT WHERE FORM LINER IS SPECIFIED.
4. ALL EXPOSED SURFACES SHALL RECEIVE ANTI-GRAFFITI COATING IN ACCORDANCE WITH TXDOT ITEM 740 GRAFFITI REMOVAL AND ANTI-GRAFFITI COATING, USING A TYPE II SACRIFICIAL MATERIAL THAT IS CLEAR (I.E., TRANSPARENT) AND MEETS REQUIRMENTS OF TXDOT DMS-8111. THE MAP OF TEXAS SHOWN ON RW(MSE)(MOD) STANDARD WILL NOT BE REQUIRED.
5. PAYMENT FOR COATINGS WILL NOT BE MADE DIRECTLY BUT SHALL BE CONSIDERED SUBSIDIARY TO TXDOT ITEM 427 SURFACE FINISHES FOR CONCRETE.
6. PAYMENT FOR AESTHETIC DETAILS AND FORM LINERS WILL NOT BE MADE DIRECTLY BUT SHALL BE CONSIDERED SUBSIDIARY TO TXDOT ITEM 420 CONCRETE STRUCTURES OR TXDOT ITEM 423 RETAINING WALL.

FORM LINER NOTES:

1. ELASTOMERIC FORM LINER SHALL BE:

   SCOTT SYSTEM, INC.
   #167 "ASHLAR STONE"
   OR
   CUSTOM ROCK INTERNATIONAL
   #1103 "RUSTIC ASHLAR"

2. HIGH RELIEF SYSTEM INSTALLED PER MANUFACTURER RECOMMENDATIONS.
3. THE FORM LINER IS INTENDED TO SIMULATE HAND-LAYERED IRREGULAR STONE BLOCKS. THE PATTERN USED SHALL BE AS DETAILED OR AS APPROVED BY THE CITY OF ROUND ROCK.
4. PATTERN RELIEF SHALL PROVIDE 1½" OVERALL RELIEF INCLUDING TEXTURED, INDIVIDUAL STONE SURFACES AND JOINTS.
5. STONE SIZES SHALL VARY FROM 8" TO 30".
6. PROVIDE FORM LINER FINISH WHERE SHOWN ON BENT CAPS, COVER PANEL FACES, ARCH PANEL FACES AND MSE WALL PANEL FACES.
7. FORM LINER SHALL NOT BE PLACED CONTINUOUSLY ACROSS ARCH PANEL JOINTS.
8. NO FORM LINER PANEL JOINTS SHALL BE PERMITTED ON MSE WALL PANELS. SLIP JOINTS WILL BE PERMITTED WHERE SHOWN IN THE PLANS.
9. PROVIDE 2" REVEALS VERTICALLY AT 6' ON FORM LINER APPLICATION.
10. PROVIDE SURFACE PREPARATION AND OPAQUE WATERPROOFING TO ALL CONCRETE STRUCTURE SURFACES.

CITY OF ROUND ROCK LOGO NOTES:

1. THE CITY OF ROUND ROCK LOGO SHALL BE FORMED INTO A WALL PANEL NEXT TO EACH BRIDGE ABUTMENT. THE EXACT LOCATION OF EACH LOGO SHALL BE APPROVED BY THE ENGINEER. THE COST OF FORMING THE LOGO WILL NOT BE PAID FOR DIRECTLY, BUT SHALL BE INCIDENTAL TO THE TXDOT ITEM 423 "RETAINING WALL". THE LOGO SHALL BE NO SMALLER THAN 3'-2" AS MEASURED ALONG THE LENGTH OF ANY BRUSH STROKE.
2. BRUSH STROKES SHALL BE INSET 1" USING A CUSTOM ELASTOMERIC FORM LINER. THE CITY WILL PROVIDE A DIGITAL IMAGE FILE TO BE USED FOR FORM LINER FABRICATION. PAINT EACH BRUSH STROKE AS DESCRIBED UNDER COLOR NOTES.

COLOR NOTES:

1. PROVIDE COLOR SAMPLES FOR CITY APPROVAL OF MINIMUM 3' x 3' SIZE BASED ON CONTROL SAMPLE:
   - 1 (R:230, G:230, B:210) - PARTIAL RETAINING WALL, BENT CAP, & AESTHETIC PANEL FORMLINER.
   - 2 (R:230, G:220, B:175) - BRIDGE SLAB/SUP EDGE, MSE WALL COPING, BENT COLUMN, BENT CAP ARCH COPING, AESTHETIC PANEL COPING, CONCRETE TRAFFIC RAIL, PARTIAL RETAINING WALL, BENT CAP, & AESTHETIC PANEL FORMLINER.
   - 3 (R:225, G:200, B:115) - PARTIAL RETAINING WALL, BENT CAP, & AESTHETIC PANEL FORMLINER,
   - 4 (R:170, G:160, B:130) - BEAM OUTER FACE AND ALL SOFFITS, PARTIAL RETAINING WALL, BENT CAP, & AESTHETIC PANEL FORMLINER.
2. PROVIDE A FULL SIZE SAMPLE OF THE CITY OF ROUND ROCK LOGO FOR CITY APPROVAL USING THE FOLLOWING COLORS FOR EACH BRUSH STROKE:
   - PANTONE 288 (R:0, G:40, B:122) - TOP BRUSH STROKE.
   - PANTONE 1805 (R:187, G:45, B:63) - LEFT BRUSH STROKE.
   - PANTONE 288 80% (R:66, G:87, B:142) - RIGHT BRUSH STROKE.

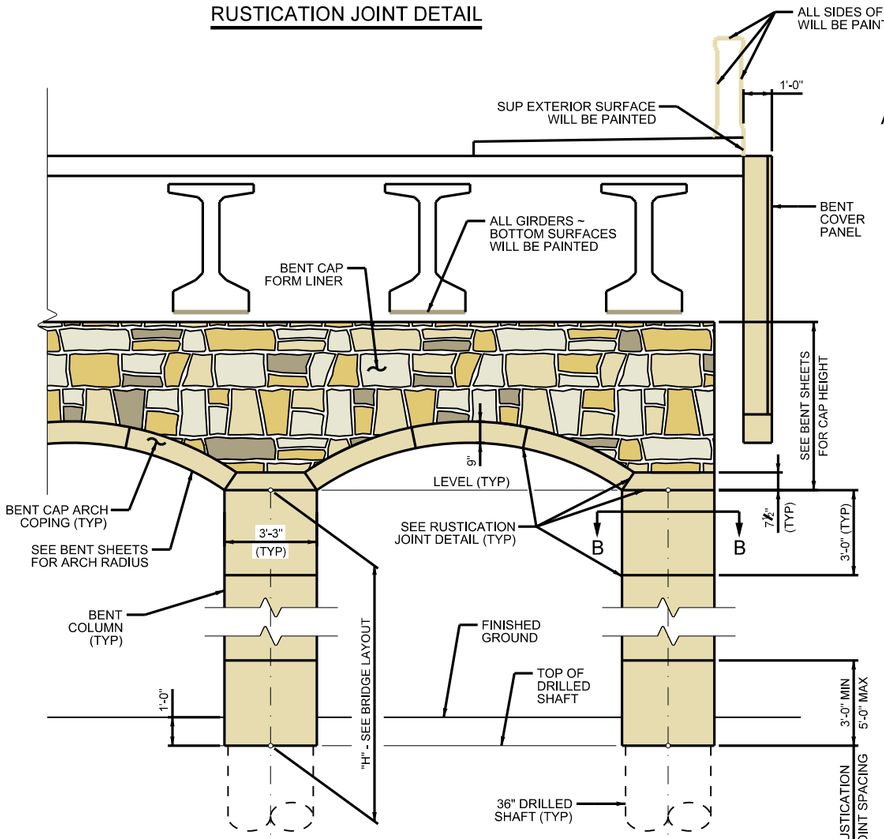

BENT ELEVATION

(1) NUMBER OF RUSTICATION JOINTS SET BY SHORTEST COLUMN (PER BENT).

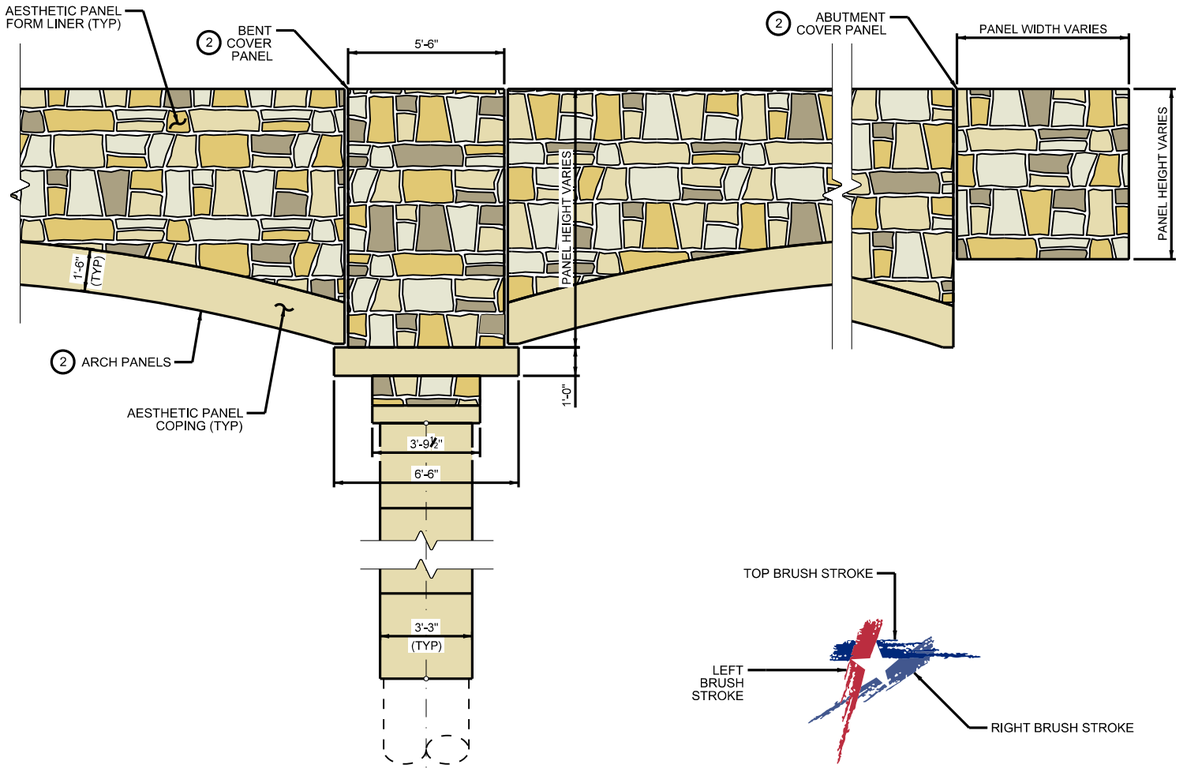

ELEVATION A-A

(2) SEE SHEETS 02-04 FOR ADDITIONAL PANEL DETAILS.

CITY OF ROUND ROCK LOGO

WYOMING SPRINGS
SEGMENT 1
ROUND ROCK, TX

AGUIRRE & FIELDS
ENGINEERING INNOVATORS
TBPE FIRM REGISTRATION # 739

Revision No.	Date	Description

STATE OF TEXAS
RYAN J. WILLIAMS
110418
LICENSED
PROFESSIONAL ENGINEER
4/17/2023

100% SUBMITTAL

Project No.:	36179
Issued:	4/17/2023
Drawn By:	QBH
Checked By:	RJW
Scale:	

Sheet Title
SB WYOMING SPRINGS AT BRUSHY CREEK AESTHETIC DETAILS SHEET 01 OF 04

276
Sheet Number

AUSTIN OFFICE
NORTH TEXAS OFFICE
14815 Omicron
12:29:13 PM
4/17/2023
USER: default
CITY OF ROUND ROCK
Plotted:
DALLAS

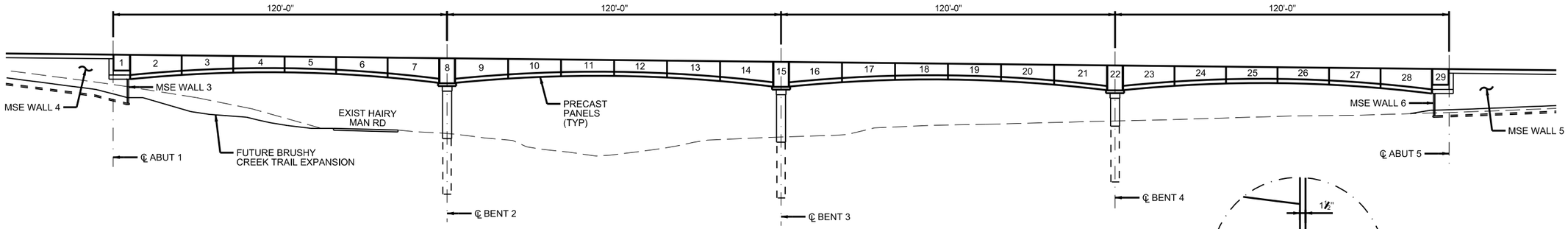

ELEVATION

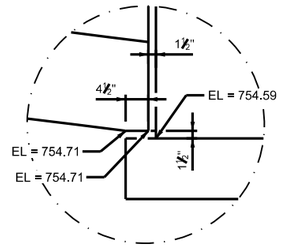

DETAIL "A"

(OTHER BENT LOCATIONS SIMILAR)

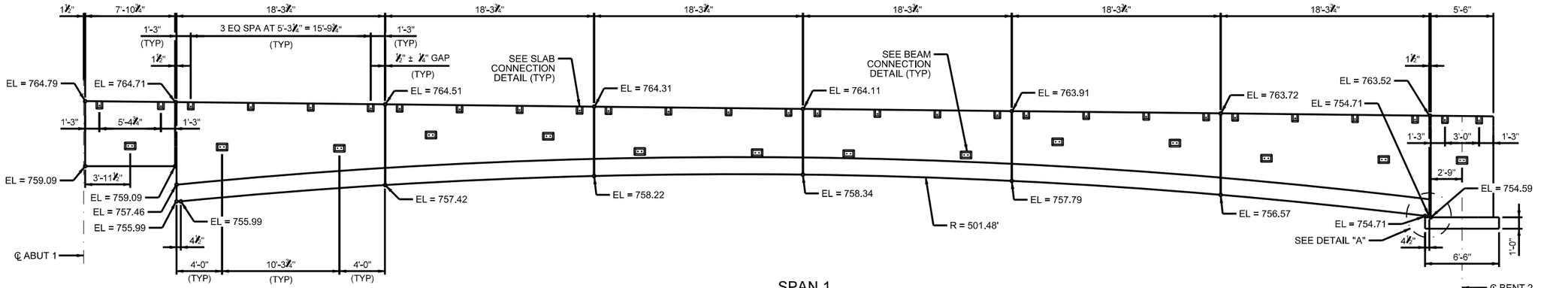

SPAN 1

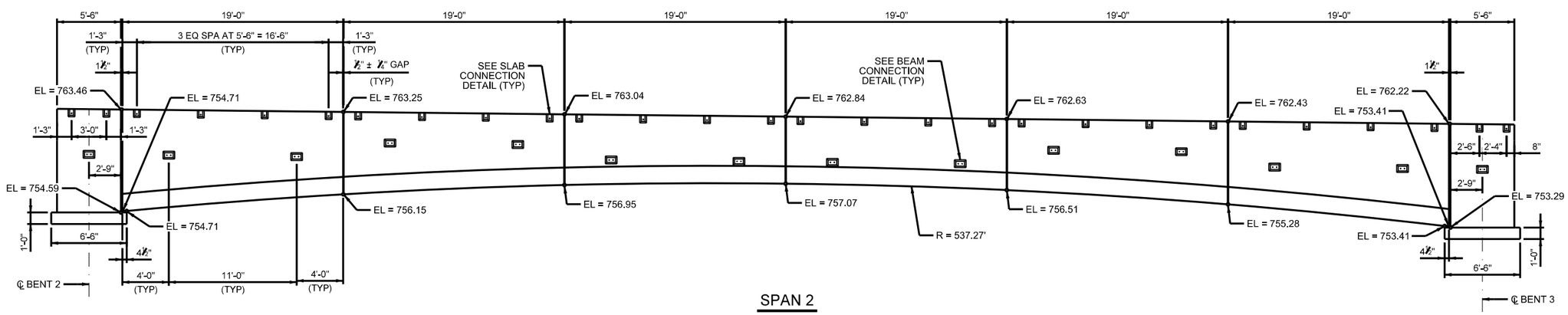

SPAN 2

WYOMING SPRINGS
SEGMENT 1
ROUND ROCK, TX

ROUND ROCK, TEXAS

AGUIRRE & FIELDS
ENGINEERING INNOVATORS
TBPE FIRM REGISTRATION # 739

Revision No.	Date	Description

STATE OF TEXAS
RYAN J. WILLIAMS
110418
LICENSED
PROFESSIONAL ENGINEER
4/17/2023

100% SUBMITTAL

Project No.:	36179
Issued:	3/30/2023
Drawn By:	QBH
Checked By:	RJW
Scale:	

Sheet Title
SB WYOMING SPRINGS AT BRUSHY CREEK AESTHETIC DETAILS SHEET 02 OF 04

277
Sheet Number

NORTH OFFICE
NORTH OFFICE
1811 Sproull
1811 Sproull
CITY OF ROUND ROCK
USER: default
4/3/2023 PM
3/30/2023

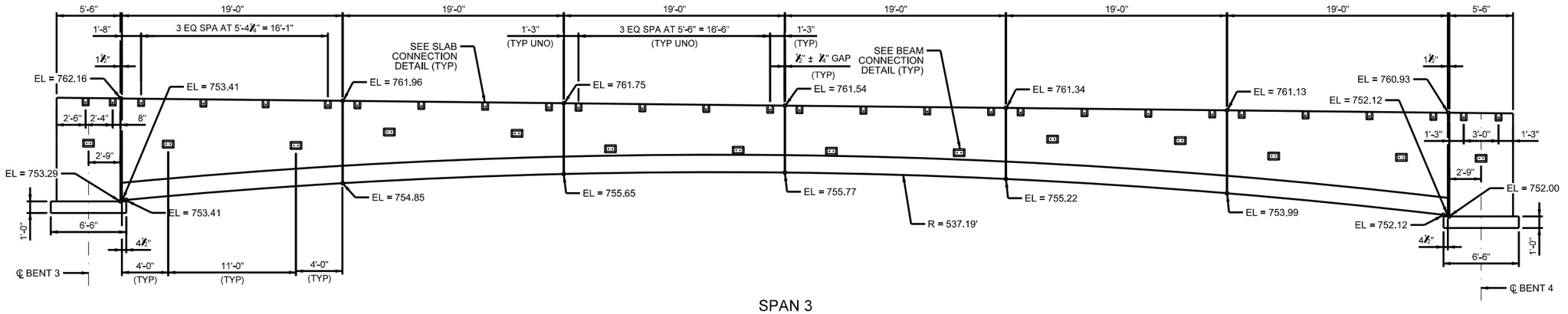

SPAN 3

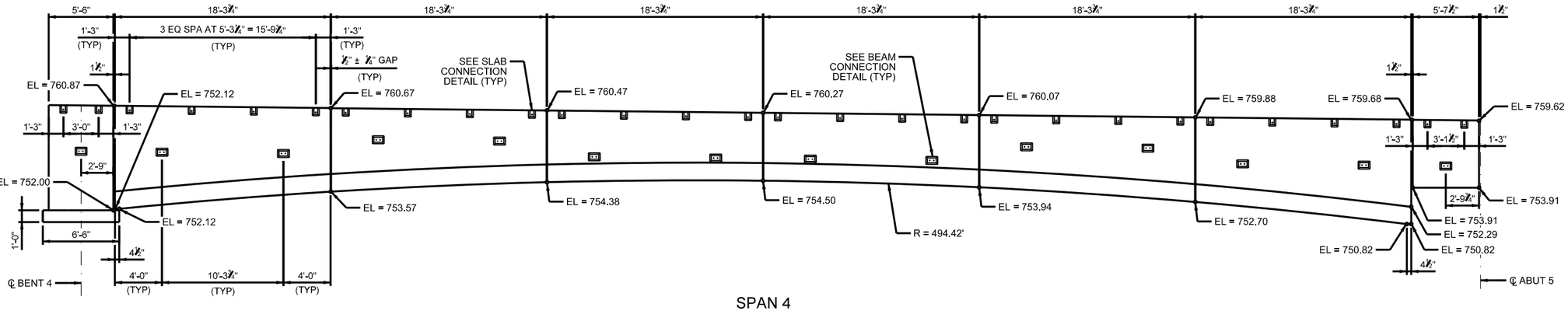

SPAN 4

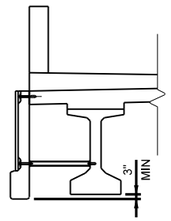

PANEL CONNECTION DETAIL

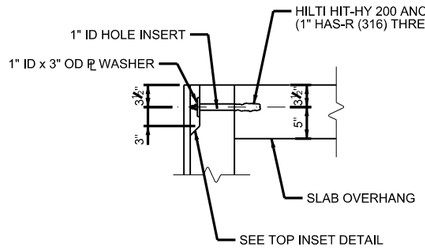

SLAB CONNECTION DETAIL

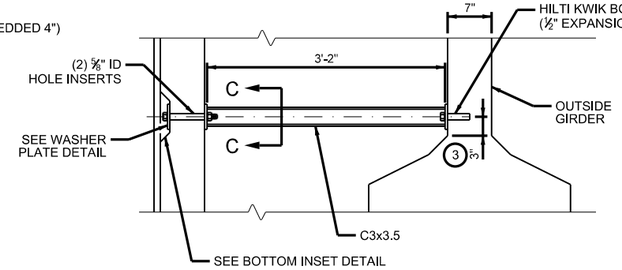

BEAM CONNECTION DETAIL

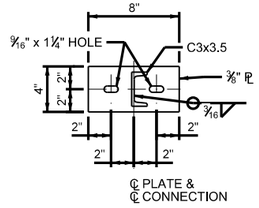

SECTION C-C

(3) 1'-6" FOR PANELS 3, 6, 10, 13, 17, 20, 24 & 27.
SEE ELEVATION ON SHEET 02 OF 04 FOR PANEL NUMBERS.

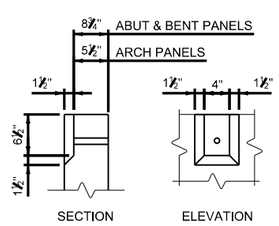

TOP INSET DETAIL

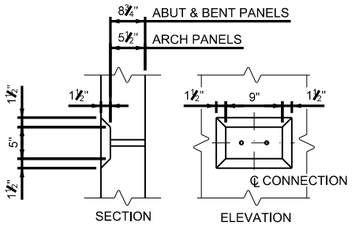

BOTTOM INSET DETAIL

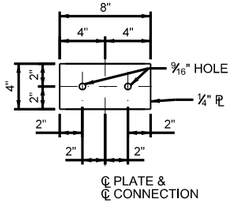

WASHER PLATE DETAIL

WYOMING SPRINGS
SEGMENT 1
ROUND ROCK, TX

ROUND ROCK, TEXAS

AGUIRRE & FIELDS
ENGINEERING INNOVATORS
TBPE FIRM REGISTRATION # 739

No.	Date	Revision Description

STATE OF TEXAS
RYAN J. WILLIAMS
110418
LICENSED
PROFESSIONAL ENGINEER
4/17/2023

100% SUBMITTAL

Project No.:	36179
Issued:	3/30/2023
Drawn By:	QBH
Checked By:	RJW
Scale:	

Sheet Title
SB WYOMING SPRINGS AT BRUSHY CREEK AESTHETIC DETAILS SHEET 03 OF 04

278
Sheet Number

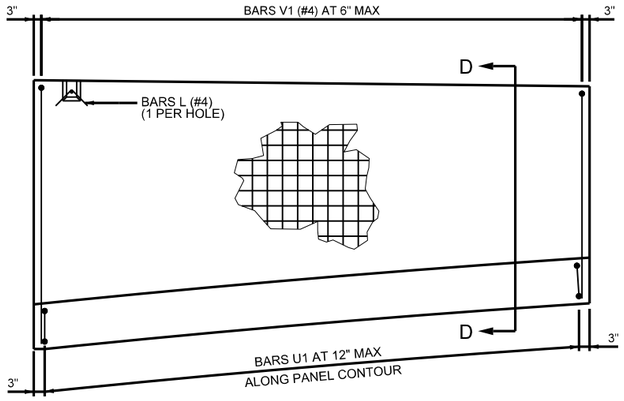

ARCH PANEL REINFORCEMENT

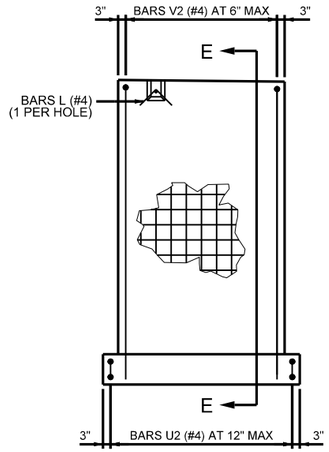

BENT COVER PANEL REINFORCEMENT

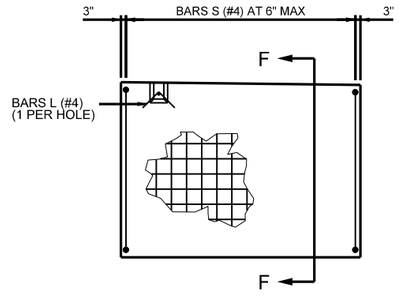

ABUTMENT COVER PANEL REINFORCEMENT

PANEL NOTES:
1. ALL CLEAR COVER SHALL BE 2" UNLESS OTHERWISE NOTED.
2. FABRICATOR SHALL ADJUST REINFORCING TO AVOID CONFLICT WITH TOP AND BOTTOM INSETS AND PROVIDE A MINIMUM CLEAR COVER OF 2". SEE INSET DETAILS ON SHEET 03 OF 04.
3. FABRICATOR SHALL SUBMIT AESTHETIC PANEL SHOP DRAWINGS FOR REVIEW AND APPROVAL BY THE ENGINEER.

PANEL CONNECTION NOTES:
1. STEEL PLATES AND STEEL CHANNELS SHALL CONFORM TO ASTM A36. GALVANIZE ALL STEEL COMPONENTS UNLESS NOTED OTHERWISE.
2. ANCHOR RODS SHALL BE AS SPECIFIED WITH ONE HEX NUT AND ONE HARDENED STEEL WASHER AT EACH BOLT. MINIMUM EMBEDMENT DEPTHS SHALL BE AS DETAILED.
3. FOLLOW MANUFACTURER'S DIRECTIONS FOR INSTALLING EPOXY ANCHORS. OTHER TYPE III (CLASS C) EPOXY ANCHORS MEETING THE REQUIREMENTS OF DMS-6100, "EPOXIES AND ADHESIVES", MAY BE USED IF IT CAN BE DEMONSTRATED THAT THEY MEET OR EXCEED THE STRENGTH OF HILTI HIT-HY 200 WITH THE SAME EMBEDMENT DEPTH, ANCHOR ROD SIZE AND SPACING.
4. BOLTED CONNECTIONS OTHER THAN EPOXY ANCHORS AND WEDGE ANCHORS SHALL CONFORM TO ASTM A325. BOLTS SHALL BE TENSIONED TO THE MINIMUM BOLT TENSION VALUES AS SPECIFIED IN ITEM 447. BOLTED CONNECTIONS WITH OVERSIZED OR SLOTTED HOLES ARE SLIP-CRITICAL.
5. NUTS SHALL CONFORM TO ASTM A563, AMERICAN STANDARD, GRADE A HEAVY HEX.
6. WASHERS SHALL CONFORM TO ASTM 436, TYPE 1.
7. ALL STRUCTURAL STEEL, INCLUDING ALL BOLTS, NUTS AND WASHERS SHALL BE HOT-DIP GALVANIZED AFTER FABRICATION.
8. EXCESS GALVANIZING MATERIAL SHALL BE REMOVED FROM THE THREADED PORTIONS OF THE BOLTS BY THE USE OF A CENTRIFUGE OR BY MECHANICAL CHASING OF THE BOLT THREADS.
9. ALL WELDING SHALL CONFORM TO THE LATEST SPECIFICATIONS OF THE AMERICAN WELDING SOCIETY. ALL WELDED CONNECTIONS SHALL BE MADE WITH AWS A5.1 OR A5.5 E70XX ELECTRODE.
10. USE A ZINC-RICH PAINT TO REPAIR AREAS OF DAMAGED GALVANIZING.

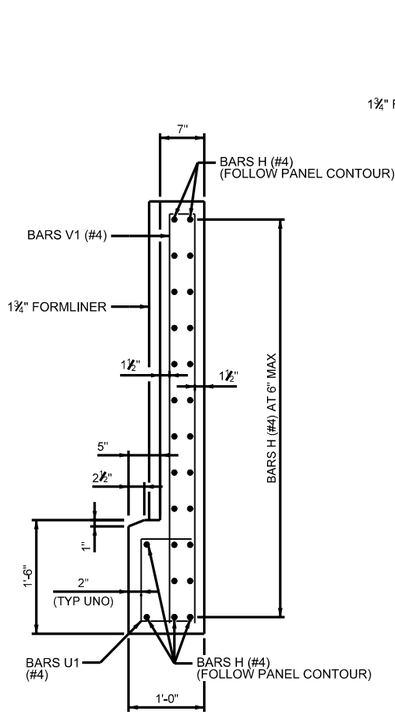

SECTION D-D

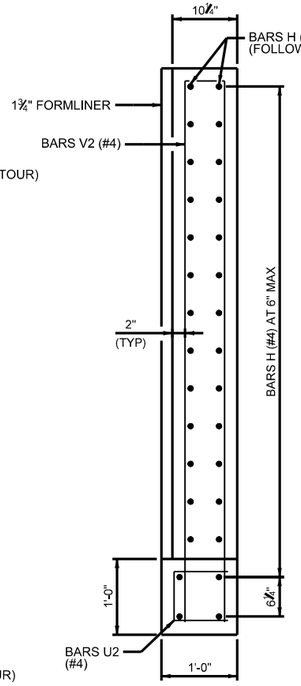

SECTION E-E

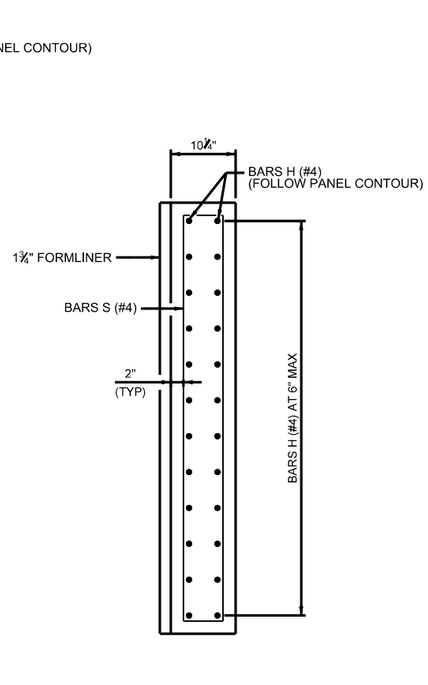

SECTION F-F

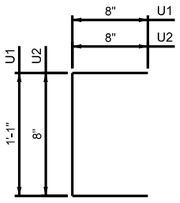

BARS U

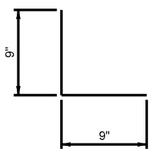

BARS L

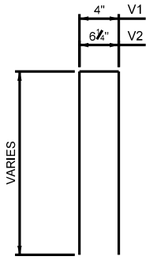

BARS V

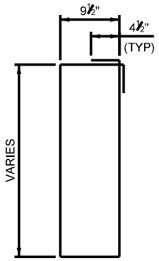

BARS S



HANDLING/TRANSPORT INSTRUCTIONS

PANEL SHALL BE SUPPORTED BY A MINIMUM OF 2 SUPPORTS AT ALL TIMES. SUPPORTS SHALL BE POSITIONED AT QUARTER POINTS OF PANEL.

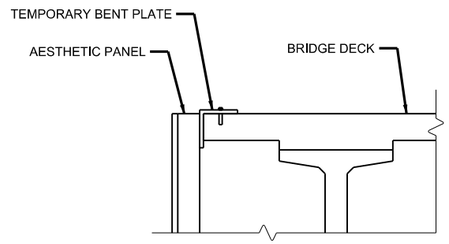

PANEL INSTALLATION BENT PLATE

BENT PLATES SHALL BE TEMPORARILY ANCHORED TO DECK AND WELDED TO BACK OF PANELS DURING INSTALLATION OF PANEL PERMANENT CONNECTIONS.

WYOMING SPRINGS
SEGMENT 1
ROUND ROCK, TX

ROUND ROCK, TEXAS

AGUIRRE & FIELDS
ENGINEERING INNOVATORS
TBPE FIRM REGISTRATION # 739

Revision No.	Date	Description

STATE OF TEXAS
RYAN J. WILLIAMS
110418
LICENSED
PROFESSIONAL ENGINEER
4/17/2023

100% SUBMITTAL

Project No.:	36179
Issued:	3/30/2023
Drawn By:	QBH
Checked By:	RJW
Scale:	

Sheet Title
SB WYOMING SPRINGS AT BRUSHY CREEK AESTHETIC DETAILS SHEET 04 OF 04

279
Sheet Number

NORTH OFFICE
NOT FOR CONSTRUCTION
1913 Quorum
Suite 100 Lubbock, Texas
Date
3/30/2023
CITY OF ROUND ROCK
USER: dwall
6:29:22 PM
3/30/2023

DRILLING LOG

WinCore Version 3.0	County	Hole	B-3	District	
	Highway	Structure		Date	02/26/20
	CSJ	Station	142+10	Grnd. Elev.	751.00 ft
		Offset		GW Elev.	735.00 ft

Elev. (ft)	LOG	Texas Cone Penetrometer	Strata Description	Triaxial Test: Lateral Press. (psi)	Triaxial Test: Deviator Stress (psi)	Properties: MC	LL	PI	Wet Den. (pcf)	Additional Remarks
749.0			CLAY, Lean, Hard, Brown (CL)			20	30	13		
			LIMESTONE, Hard to Very Hard, Tan			23				
		50 (2) 50 (1)				27				
						18				
						20				
		50 (1) 50 (0)								
		50 (1) 50 (0.5)				20				
734.0			CLAY, Fat, Raddish-Brown (CH)							
		38 (6) 50 (5)								
730.5			LIMESTONE, Hard to Very Hard, Gray							
		50 (1) 50 (1)				29				
		50 (0.5) 50 (0)								

Remarks:
Lat, Long: 30.526977, -97.722659

Any ground water elevation information provided on this boring log is representative of conditions existing on the day and for the specific location where this information was collected. The actual groundwater elevation may fluctuate due to time, climatic conditions, and/or construction activity.

Driller: **Logger:** **Organization: Raba-Kistner Consultants, Inc.**

FIGURE: 4a

DRILLING LOG

WinCore Version 3.0	County	Hole	B-3	District	
	Highway	Structure		Date	02/26/20
	CSJ	Station	142+10	Grnd. Elev.	751.00 ft
		Offset		GW Elev.	735.00 ft

Elev. (ft)	LOG	Texas Cone Penetrometer	Strata Description	Triaxial Test: Lateral Press. (psi)	Triaxial Test: Deviator Stress (psi)	Properties: MC	LL	PI	Wet Den. (pcf)	Additional Remarks
			LIMESTONE, Hard to Very Hard, Gray							
32										
34		50 (0) 50 (0.5)				21				
36										
38										
40		50 (1) 50 (0.5)								
42										
44		50 (0) 50 (0)				19				
46										
48										
50		50 (1) 50 (0)								
52										
54		50 (1) 50 (0.5)				17				
56										
58										
60		50 (0.5) 50 (0.5)								

Remarks:
Lat, Long: 30.526977, -97.722659

Any ground water elevation information provided on this boring log is representative of conditions existing on the day and for the specific location where this information was collected. The actual groundwater elevation may fluctuate due to time, climatic conditions, and/or construction activity.

Driller: **Logger:** **Organization: Raba-Kistner Consultants, Inc.**

FIGURE: 4b

STATE OF TEXAS
RICHARD T. SHIMONO
35020
LICENSED
PROFESSIONAL ENGINEER

4/05/2023

WYOMING SPRINGS
SEGMENT 1
ROUND ROCK, TX

ROUND ROCK, TEXAS

RABA KISTNER
TBPE Firm Registration No. F-3257

Revision No.	Date	Description

100% SUBMITTAL

Project No.:	36179
Issued:	3/15/2023
Drawn By:	QBH
Checked By:	RJW
Scale:	

Sheet Title
SB WYOMING SPRINGS AT BRUSHY CREEK
BORING LOGS
SHEET 01 OF 05

280
Sheet Number

DRILLING LOG

3 of 3

WinCore Version 3.0	County		Hole	B-3	District
	Highway		Structure		Date 02/26/20
	CSJ		Station	142+10	Grnd. Elev. 751.00 ft
			Offset		GW Elev. 735.00 ft

Elev. (ft)	LOG	Texas Cone Penetrometer	Strata Description	Triaxial Test: Lateral Press. (psi)	Triaxial Test: Deviator Stress (psi)	Properties: MC	LL	PI	Wet Den. (pcf)	Additional Remarks
			LIMESTONE, Hard to Very Hard, Gray							
62										
64		50 (0.5) 50 (0)				19				
66										
68										
001.0 70		50 (1) 50 (0)								
72										
74										
76										
76										
80										
62										
64										
86										
88										
90										

Remarks:
Lat, Long: 30.526977, -97.722659

Any ground water elevation information provided on this boring log is representative of conditions existing on the day and for the specific location where this information was collected. The actual groundwater elevation may fluctuate due to time, climatic conditions, and/or construction activity.

Driller: **Logger:** **Organization: Raba-Kistner Consultants, Inc.**

FIGURE: 4c

DRILLING LOG

1 of 3

WinCore Version 3.0	County		Hole	B-4	District
	Highway		Structure		Date 02/27/20
	CSJ		Station	139+20	Grnd. Elev. 742.00 ft
			Offset		GW Elev. 730.00 ft

Elev. (ft)	LOG	Texas Cone Penetrometer	Strata Description	Triaxial Test: Lateral Press. (psi)	Triaxial Test: Deviator Stress (psi)	Properties: MC	LL	PI	Wet Den. (pcf)	Additional Remarks
			CLAY, Lean, Brown (CL)			3				
740.0 2			LIMESTONE, Hard to Very Hard, Tan			3				
4		50 (1) 50 (0.5)				19				
6						17				
8						18				
10		50 (2) 50 (1)								
12										
14		50 (1) 50 (0.5)				14				
16										
18										
20		50 (0.5) 50 (0)								
720.0 22			LIMESTONE, Hard to Very Hard, Gray							
24		50 (0.5) 50 (0.5)				27				
26										
28										
30		50 (0.5) 50 (0)								

Remarks:
Lat, Long: 30.526261, -97.72226

Any ground water elevation information provided on this boring log is representative of conditions existing on the day and for the specific location where this information was collected. The actual groundwater elevation may fluctuate due to time, climatic conditions, and/or construction activity

Driller: **Logger:** **Organization: Raba-Kistner Consultants, Inc.**

FIGURE: 5a

STATE OF TEXAS
RICHARD T. SHIMONO
135020
LICENSED
PROFESSIONAL ENGINEER

4/05/2023

WYOMING SPRINGS
SEGMENT 1
ROUND ROCK, TX

ROUND ROCK, TEXAS

RABA KISTNER
TBPE Firm Registration No. F-3257

Revision No.	Date	Description

100% SUBMITTAL

Project No.:	36179
Issued:	3/15/2023
Drawn By:	QBH
Checked By:	RJW
Scale:	

Sheet Title
SB WYOMING SPRINGS AT BRUSHY CREEK
BORING LOGS
SHEET 02 OF 05

281
Sheet Number

DRILLING LOG

WinCore Version 3.0	County	Hole	B-4	District	
	Highway	Structure		Date	02/27/20
	CSJ	Station	139+20	Grnd. Elev.	742.00 ft
		Offset		GW Elev.	730.00 ft

Elev. (ft)	LOG	Texas Cone Penetrometer	Strata Description	Triaxial Test: Lateral Press. (psi)	Triaxial Test: Deviator Stress (psi)	Properties: MC	LL	PI	Wet Den. (pcf)	Additional Remarks
			LIMESTONE, Hard to Very Hard, Gray							
32										
34		50 (0.5) 50 (1)				14				
36										
38										
40		50 (1) 50 (0.5)								
42										
44		50 (0.5) 50 (0.5)				15				
46										
48										
50		50 (0.5) 50 (0)								
52										
54		50 (0.5) 50 (0.5)				15				
56										
58										
60		50 (1) 50 (0)								

Remarks:
Lat, Long: 30.526261, -97.72226

Any ground water elevation information provided on this boring log is representative of conditions existing on the day and for the specific location where this information was collected. The actual groundwater elevation may fluctuate due to time, climatic conditions, and/or construction activity.

Driller: **Logger:** **Organization: Raba-Kistner Consultants, Inc.**

FIGURE: 5b

DRILLING LOG

WinCore Version 3.0	County	Hole	B-4	District	
	Highway	Structure		Date	02/27/20
	CSJ	Station	139+20	Grnd. Elev.	742.00 ft
		Offset		GW Elev.	730.00 ft

Elev. (ft)	LOG	Texas Cone Penetrometer	Strata Description	Triaxial Test: Lateral Press. (psi)	Triaxial Test: Deviator Stress (psi)	Properties: MC	LL	PI	Wet Den. (pcf)	Additional Remarks
			LIMESTONE, Hard to Very Hard, Gray							
62										
64		50 (0) 50 (0.5)								
66										
68										
672.0 70		50 (0.5) 50 (0								
72										
74										
76										
78										
80										
82										
84										
86										
88										
90										

Remarks:
Lat, Long: 30.526261, -97.72226

Any ground water elevation information provided on this boring log is representative of conditions existing on the day and for the specific location where this information was collected. The actual groundwater elevation may fluctuate due to time, climatic conditions, and/or construction activity.

Driller: **Logger:** **Organization: Raba-Kistner Consultants, Inc.**

FIGURE: 5c

STATE OF TEXAS
RICHARD T. SHIMONO
135020
LICENSED
PROFESSIONAL ENGINEER

4/05/2023

WYOMING SPRINGS
SEGMENT 1
ROUND ROCK, TX

ROUND ROCK, TEXAS

RABA KISTNER
TBPE Firm Registration No. F-3257

Revision No.	Date	Description

100% SUBMITTAL

Project No.:	36179
Issued:	3/15/2023
Drawn By:	QBH
Checked By:	RJW
Scale:	

Sheet Title
SB WYOMING SPRINGS AT BRUSHY CREEK BORING LOGS SHEET 03 OF 05

282
Sheet Number

DRILLING LOG

WinCore Version 3.0

County: CSJ
Highway:
Hole: B-5
Structure:
Station: 136+20
Offset:
District:
Date: 02/18/20
Grnd. Elev.: 751.00 ft
GW Elev.: 739.00 ft

Elev. (ft)	LOG	Texas Cone Penetrometer	Strata Description	Triaxial Test: Lateral Press. (psi)	Triaxial Test: Deviator Stress (psi)	Properties: MC	LL	PI	Wet Den. (pcf)	Additional Remarks
			CL-ML, Soft, Dark Brown to Brown			29				- PP: 2.5 taf
2						11	24	5		- PP: 4.5 taf
4		8 (8) 7 (8)				20				- PP: 3.5 taf
6						19				
						19				- PP: 4.0 taf
6						20				- PP: 3.0 taf
10		8 (8) 8 (8)								
739.0 12			LIMESTONE, Very Hard, Tan			33				
14		50 (0.5) 50 (0)								
16										
16						27				
20		50 (0.5) 50 (0)								
22										
24		50 (0) 50 (0)				18				
726.0			LIMESTONE, Very Hard to Hard, Gray							
26										
26						18				
30		50 (0) 50 (0)								

Remarks:
Lat, Long: 30.525491, -97.721963

Any ground water elevation informetion provided on this boring log is representative of conditions existing on the day and for the specific location where this information was collected. The actual groundwater elevation may fluctuate due to time, climatic conditions, and/or construction activity

Driller: **Logger:** **Organization: Raba-Kistner Consultants, Inc.**

FIGURE: 6a

DRILLING LOG

WinCore Version 3.0

County: CSJ
Highway:
Hole: B-5
Structure:
Station: 136+20
Offset:
District:
Date: 02/18/20
Grnd. Elev.: 751.00 ft
GW Elev.: 739.00 ft

Elev. (ft)	LOG	Texas Cone Penetrometer	Strata Description	Triaxial Test: Lateral Press. (psi)	Triaxial Test: Deviator Stress (psi)	Properties: MC	LL	PI	Wet Den. (pcf)	Additional Remarks
			LIMESTONE, Very Hard to Hard, Gray							
32						16				
34		50 (0.5) 50 (0)								
36										
38						20				
40		50 (0) 50 (0								
42										
44						27				
		50 (0.5) 50 (0)								
46						24				
50		50 (0) 50 (0)								
52										
54		50 (1.5) 50 (0.5)				20				
56										
58						25				
60		50 (0.5) 50 (0.5)								

Remarks:
Lat, Long: 30.525491, -97.721963

Any ground water elevation information provided on this boring log is representative of conditions existing on the day and for the specific location where this information was collected. The actual groundwater elevation may fluctuate due to time, climatic conditions, and/or construction activity.

Driller: **Logger:** **Organization: Raba-Kistner Consultants, Inc.**

FIGURE: 6b

STATE OF TEXAS
RICHARD T SHIMONO
135020
LICENSED
PROFESSIONAL ENGINEER

4/05/2023

WYOMING SPRINGS
SEGMENT 1
ROUND ROCK, TX

ROUND ROCK, TEXAS

RABA KISTNER
TBPE Firm Registration No. F-3257

Revision No.	Date	Description

100% SUBMITTAL

Project No.:	36179
Issued:	3/15/2023
Drawn By:	QBH
Checked By:	RJW
Scale:	

Sheet Title
SB WYOMING SPRINGS AT BRUSHY CREEK
BORING LOGS
SHEET 04 OF 05

283
Sheet Number

DRILLING LOG

WinCore Version 3.0	County	Hole	B-5	District	
	Highway	Structure		Date	02/18/20
	CSJ	Station	136+20	Grnd. Elev.	751.00 ft
		Offset		GW Elev.	739.00 ft

Elev. (ft)	LOG	Texas Cone Penetrometer	Strata Description	Triaxial Test: Lateral Press. (psi)	Triaxial Test: Deviator Stress (psi)	Properties: MC	LL	PI	Wet Den. (pcf)	Additional Remarks
			LIMESTONE, Very Hard to Hard, Gray							
62						19				
64		50 (2) 50 (1)								
66										
68						19				
701.0 70		50 (0.5) 50 (0)								
72										
74										
76										
78										
80										
82										
84										
86										
88										
90										

Remarks:
Lat, Long: 30.525491, -97.721963

Any ground water elevation information provided on this boring log is representative of conditions existing on the day and for the specific location where this information was collected. The actual groundwater elevation may fluctuate due to time, climatic conditions, and/or construction activity.

Driller: **Logger:** **Organization: Reba-Kistner Consultants, Inc.**

FIGURE: 6c

STATE OF TEXAS
RICHARD T SHIMONO
135020
LICENSED
PROFESSIONAL ENGINEER

4/05/2023

WYOMING SPRINGS
SEGMENT 1
ROUND ROCK, TX

ROUND ROCK, TEXAS

RABA KISTNER
TBPE Firm Registration No. F-3257

Revision No.	Data	Description

100% SUBMITTAL

Project No.:	36179
Issued:	3/15/2023
Drawn By:	QBH
Checked By:	RJW
Scale:	

Sheet Title
SB WYOMING SPRINGS AT BRUSHY CREEK BORING LOGS SHEET 05 OF 05

284
Sheet Number

STRUCTURE	DESIGNED GIRDERS									DEPRESSED STRAND PATTERN		CONCRETE		OPTIONAL DESIGN				
	SPAN NO.	GIRDER NO.	GIRDER TYPE	PRESTRESSING STRANDS						NO.	TO END (in)	RELEASE STRGTH (1) f'ci (ksi)	MINIMUM 28 DAY COMP STRGTH f'c (ksi)	DESIGN LOAD COMP STRESS (TOP ℄) (SERVICE I) fct(ksi)	DESIGN LOAD TENSILE STRESS (BOTT ℄) (SERVICE III) fcb(ksi)	REQUIRED MINIMUM ULTIMATE MOMENT CAPACITY (STRENGTH I) (kip-ft)	LIVE LOAD DISTRIBUTION FACTOR (2)	
				NON-STD STRAND PATTERN	TOTAL NO.	SIZE (in)	STRGTH fpu (ksi)	"e" ℄ (in)	"e" END (in)								Moment	Shear
SB WYOMING SPRINGS AT BRUSHY CREEK BRIDGE	ALL	1 - 3	Tx54		46	0.6	270	18.66	11.36	8	50.5	5.800	7.500	4.358	-4.602	8862	0.565	0.718
	ALL	4 - 6	Tx54		36	0.6	270	19.34	12.01	6	50.5	4.700	6.000	3.891	-3.643	6833	0.496	0.718
	ALL	7	Tx54		38	0.6	270	19.22	12.27	6	50.5	5.000	6.000	4.099	-3.879	7413	0.565	0.718

NON-STANDARD STRAND PATTERNS

PATTERN	STRAND ARRANGEMENT AT ℄ OF GIRDER

(1) Based on the following allowable stresses (ksi):

Compression = 0.65 f'ci

Tension = $0.24\sqrt{f'ci}$

Optional designs must likewise conform.

(2) Portion of full HL93.

DESIGN NOTES:

Designed according to AASHTO LRFD Bridge Design Specifications.

Optional designs for girders 120 feet or longer must have a calculated residual camber equal to or greater than that of the designed girder.

Prestress losses for the designed girders have been calculated for a relative humidity of 60 percent. Optional designs must likewise conform.

FABRICATION NOTES:

Provide Class H concrete.

Provide Grade 60 reinforcing steel bars.

Use low relaxation strands, each pretensioned to 75 percent of fpu.

Strand debonding must comply with Item 424.4.2.2.2.4. Full-length debonded strands are only permitted in positions marked Δ. Double wrap full-length debonded strands in outer most position of each row.

When shown on this sheet, the Fabricator has the option of furnishing either the designed girder or an approved optional design. All optional design submittals must be signed, sealed and dated by a Professional Engineer registered in the State of Texas.

Seal cracks in girder ends exceeding 0.005" in width as directed by the Engineer. The fabricator is permitted to decrease the spacing of Bars R and S by providing additional bars to help limit crack width provided the decreased spacing results in no less than 1" clear between bars. The fabricator must take an approved corrective action if cracks greater than 0.005" form on a repetitive basis.

DEPRESSED STRAND DESIGNS:

Locate strands for the designed girder as low as possible on the 2" grid system unless a non-standard strand pattern is indicated. Fill row "2.5", then row "4.5", then row "6.5", etc., beginning each row in the "A" position and working outward until the required number of strands is reached. All strands in the "A" position must be depressed, maintaining the 2" spacing so that, at the girder ends, the upper two strands are in the position shown in the table.

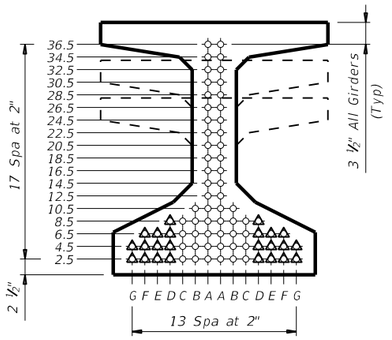

TYPE Tx28, Tx34 & Tx40

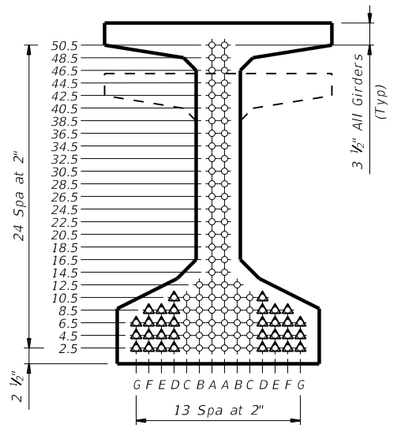

TYPE Tx46 & Tx54

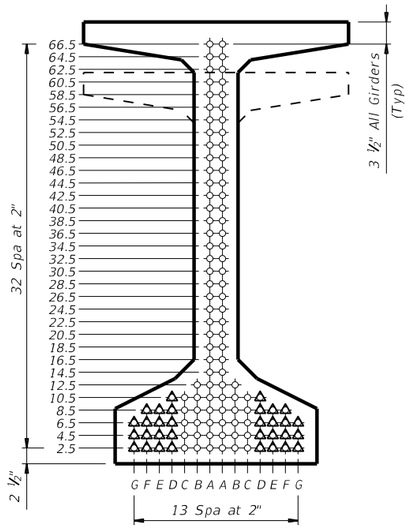

TYPE Tx62 & Tx70

HL93 LOADING

AGUIRRE & FIELDS, LP
TBPELS FIRM REGISTRATION #739

STATE OF TEXAS
RYAN J. WILLIAMS
110418
LICENSED PROFESSIONAL ENGINEER
4/17/2023

Texas Department of Transportation

Bridge Division Standard

PRESTRESSED CONCRETE I-GIRDER DESIGNS (NON-STANDARD SPANS)

IGND

FILE: IGND_BCSB.dgn	DN: TxDOT	CK: TxDOT	DW: EFC	CK: TAR
©TxDOT August 2017	CONT	SECT	JOB	HIGHWAY
REVISIONS 10-19: Modified for depressed strands only.				WYM SPR
	DIST	COUNTY		SHEET NO.
		WILLIAMSON		285

DISCLAIMER:
The use of this standard is governed by the "Texas Engineering Practice Act". No warranty of any kind is made by TxDOT for any purpose whatsoever. TxDOT assumes no responsibility for the conversion of this standard to other formats or for incorrect results or damages resulting from its use.

DATE: 3/30/2023 6:41:01 PM
FILE: c:\pw-of\pw-of-prod\quan.haaguirre-fields.com\d0226434\IGND_BCSB.dgn

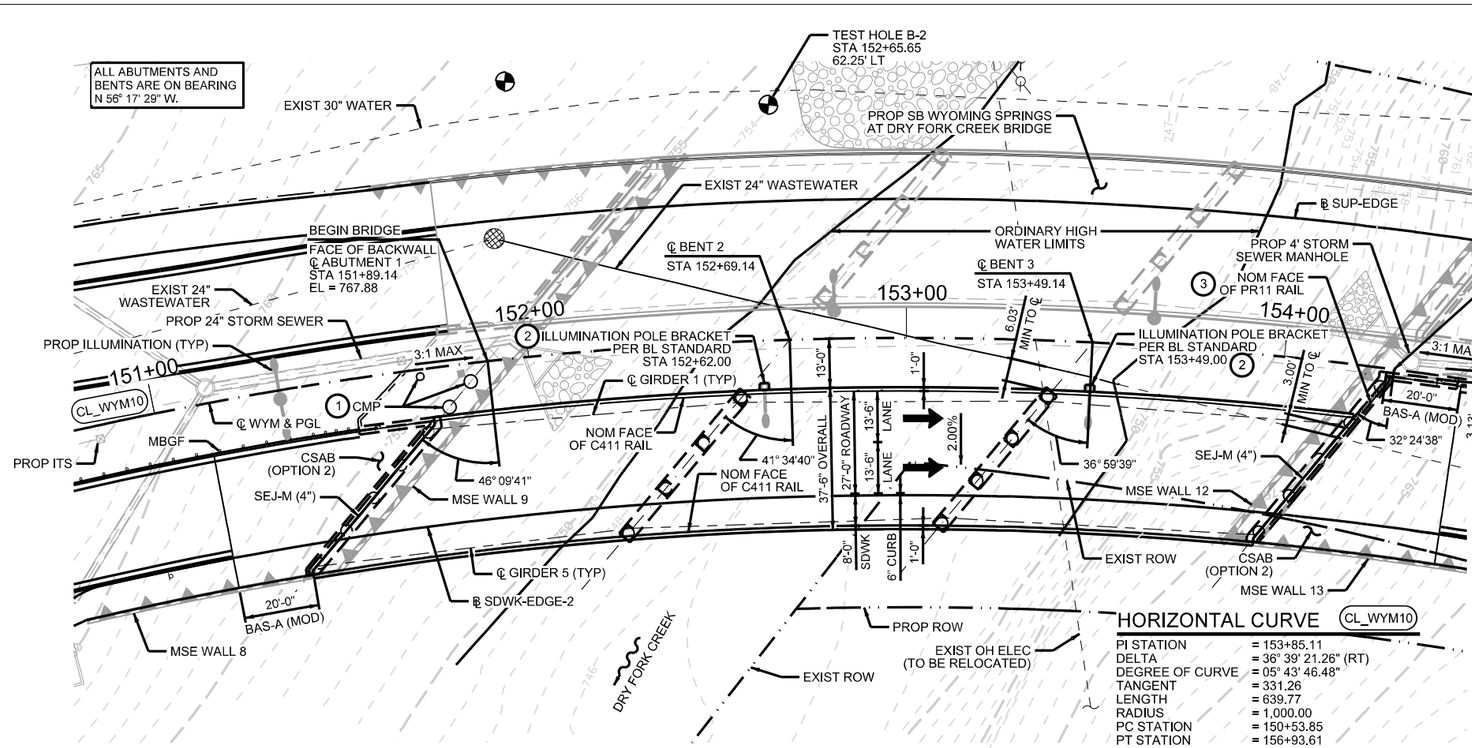

PLAN

HORIZONTAL CURVE (CL_WYM10)

PI STATION	= 153+85.11
DELTA	= 36° 39' 21.26" (RT)
DEGREE OF CURVE	= 05° 43' 46.48"
TANGENT	= 331.26
LENGTH	= 639.77
RADIUS	= 1,000.00
PC STATION	= 150+53.85
PT STATION	= 156+93.61

DESIGN SPEED: 45 MPH
FUNCTIONAL CLASS: ARTERIAL
2022 ADT: 3,800
2042 ADT: 7,550
NBI NO: 14-246-E020-21-005

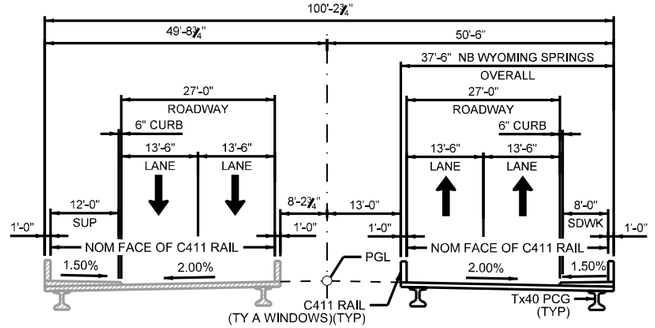

TYPICAL SECTION

GENERAL NOTES:
1. DESIGNED IN ACCORDANCE WITH AASHTO LRFD BRIDGE DESIGN SPECIFICATIONS, 9TH EDITION (2020).
2. ALL DIMENSIONS ARE EITHER HORIZONTAL OR VERTICAL AND MUST BE CORRECTED FOR GRADE AND CROWN.
3. "H" VALUES SHOWN ARE ESTIMATED COLUMN HEIGHTS. CONTRACTOR IS RESPONSIBLE FOR CALCULATING ACTUAL COLUMN HEIGHTS BASED ON FIELD CONDITIONS.
4. CONTRACTOR SHALL VERIFY LOCATIONS OF EXISTING UTILITIES PRIOR TO CONSTRUCTION.
5. "D" DENOTES BENTS WITH DOWELED END CONDITION. SEE BENT SHEETS FOR LOCATIONS OF DOWELS D.
6. SEE "BORING LOGS" SHEETS FOR BORING LOG INFORMATION.
7. SEE "AESTHETIC DETAILS" SHEETS FOR AESTHETIC INFORMATION.
8. SEE "ILLUMINATION PLAN" AND "PCGU SHEETS FOR ILLUMINATION AND FUTURE ITS INFORMATION.

0 20 40 60 80

SCALE: 1"=40'

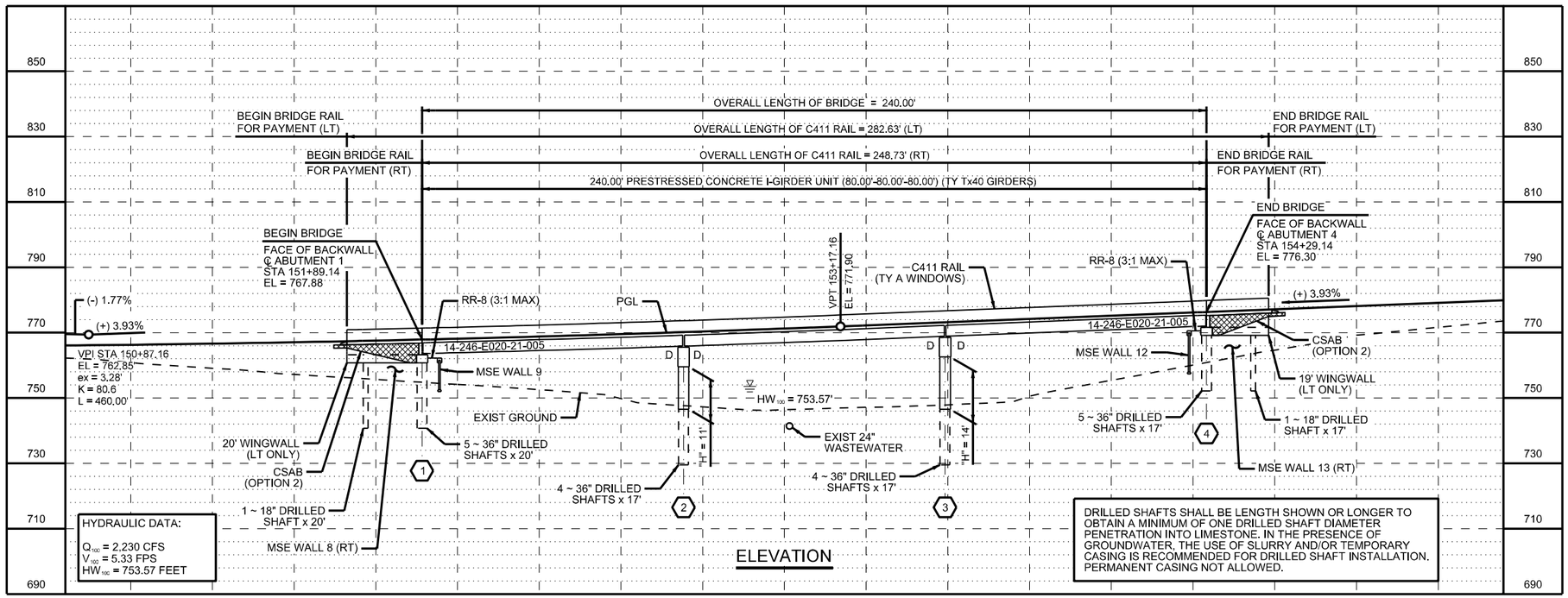

ELEVATION

HL93 LOADING

1 SEE ABUTMENT 1 SHEET FOR CMP DETAILS.

2 CONDUIT FOR ILLUMINATION POLE BRACKET SHALL BE PLACED PRIOR TO REINFORCED CONCRETE SLAB POUR.

3 ATTACH PR11 RAIL TO APPROACH SLAB 14.46' ALONG ABUTMENT BACKWALL, OUTSIDE OF BRIDGE FOR FALL PROTECTION.

WYOMING SPRINGS
SEGMENT 1
ROUND ROCK, TX

ROUND ROCK, TEXAS

AGUIRRE & FIELDS
ENGINEERING INNOVATORS
TBPE FIRM REGISTRATION # 739

Revision No.	Date	Description

STATE OF TEXAS
RYAN J. WILLIAMS
110418
LICENSED
PROFESSIONAL ENGINEER
4/20/2023

100% SUBMITTAL

Project No.:	36179
Issued:	4/20/2023
Drawn By:	QBH
Checked By:	RJW
Scale:	

Sheet Title
NB WYOMING SPRINGS AT DRY FORK CREEK BRIDGE LAYOUT

Sheet Number
286

SUMMARY OF BRIDGE QUANTITIES

ITEM	400	416	416	420	420	420	422	422	422	425	427	432	442	450	450	454	460	460
BID CODE	6005	6001	6004	6013	6029	6037	6001	6013	6015	6037	6002	6002	6007	6036	6103	6018	6003	6006
DESCRIPTION (NBI #: 14-246-E020-21-005)	CEM STABIL BKFL	DRILL SHAFT (18 IN)	DRILL SHAFT (36 IN)	CL C CONC (ABUT) (1)	CL C CONC (CAP) (1)	CL C CONC (COLUMN)	REINF CONC SLAB	BRIDGE SIDEWALK	APPROACH SLAB	PRESTR CONC GIRDER (TX40)	CONCRETE PAINT FINISH	RIPRAP (CONC) (5 IN)	STR STEEL (MISC NON - BRIDGE) (2)	RAIL (TY C411)	RAIL (TY PR11)	SEALED EXPANSION JOINT (4 IN) (SEJ-M)	CMP (GAL STL 24 IN)	CMP (GAL STL 42 IN)
UNIT	CY	LF	LF	CY	CY	CY	SF	SF	CY	LF	SF	CY	LB	LF	LF	LF	LF	LF
ABUTMENTS 1 & 4	254.0	37	185	65.8				597	125.5			14		39	14.5		10	20
BENTS 2-3			136		79.9	39.3					2,790							
1 ~ 240.00' PRESTRESSED CONCRETE I-GIRDER UNIT							9,220	2,361		1,221.50	10,460		303.3	492.4		73		
TOTAL	254.0	37	321	65.8	79.9	39.3	9,220	2,958	125.5	1,221.50	13,250	14	303.3	531.4	14.5	73	10	20

(1) QUANTITY INCLUDES SHEAR KEYS

(2) QUANTITY FOR BRIDGE SIDEWALK EXPANSION JOINT COVER PLATE

BEARING SEAT ELEVATIONS

	BEAM 1	BEAM 2	BEAM 3	BEAM 4	BEAM 5
BENT 1 (FWD)	762.385	762.039	761.702	761.375	761.056
	BEAM 1	BEAM 2	BEAM 3	BEAM 4	BEAM 5
BENT 2 (BK)	764.655	764.264	763.877	763.495	763.118
(FWD)	764.678	764.285	763.897	763.514	763.135
	BEAM 1	BEAM 2	BEAM 3	BEAM 4	BEAM 5
BENT 3 (BK)	767.598	767.191	766.781	766.368	765.954
(FWD)	767.761	767.355	766.946	766.533	766.118
	BEAM 1	BEAM 2	BEAM 3	BEAM 4	BEAM 5
BENT 4 (BK)	770.897	770.530	770.161	769.788	769.413

HL93 LOADING

WYOMING SPRINGS
SEGMENT 1
ROUND ROCK, TX

ROUND ROCK, TEXAS

AGUIRRE & FIELDS
ENGINEERING INNOVATORS
TBPE FIRM REGISTRATION # 739

Revision No.	Date	Description

STATE OF TEXAS
RYAN J. WILLIAMS
110418
LICENSED
PROFESSIONAL ENGINEER
4/17/2023

100% SUBMITTAL

Project No.:	36179
Issued:	4/17/2023
Drawn By:	QBH
Checked By:	RJW
Scale:	

Sheet Title
NB WYOMING SPRINGS AT DRY FORK CREEK ESTIMATED QUANTITIES & BRG SEAT ELEVATIONS

287
Sheet Number

4/17/2023 12:18:26 PM USER: default CITY OF ROUND ROCK Drain: DALLAS 1811-Open.tbl NORTH OFFICE ROUND ROCK

GENERAL NOTES:
1. DESIGNED IN ACCORDANCE WITH AASHTO LRFD BRIDGE DESIGN SPECIFICATIONS, 9TH EDITION (2020).

2. SEE BRIDGE LAYOUT FOR FOUNDATION TYPE, SIZE, AND LENGTH.

3. SEE COMMON FOUNDATION DETAILS STANDARD, FD(MOD), FOR ALL FOUNDATION DETAILS AND NOTES.

4. SEE CONCRETE RIPRAP (CRR) STANDARD FOR RIPRAP ATTACHMENT DETAILS.

5. SEE TYPE C411 RAIL STANDARD FOR RAIL ANCHORAGE IN WINGWALLS.

6. SEE SHEAR KEY DETAILS STANDARD, IGSK, FOR ALL SHEAR KEY DETAILS AND NOTES.

7. COVER DIMENSIONS ARE CLEAR DIMENSIONS, UNLESS NOTED OTHERWISE.

8. REINFORCING BAR DIMENSIONS ARE OUT-TO-OUT OF BAR.

9. CALCULATED FOUNDATION LOADS:
ABUTMENT 1: 95 TONS/DR SH.
ABUTMENT 4: 115 TONS/DR SH.

MATERIAL NOTES:
1. PROVIDE CLASS C CONCRETE STRENGTH ($f'c$ = 3600 PSI).

2. PROVIDE GRADE 60 REINFORCING STEEL.

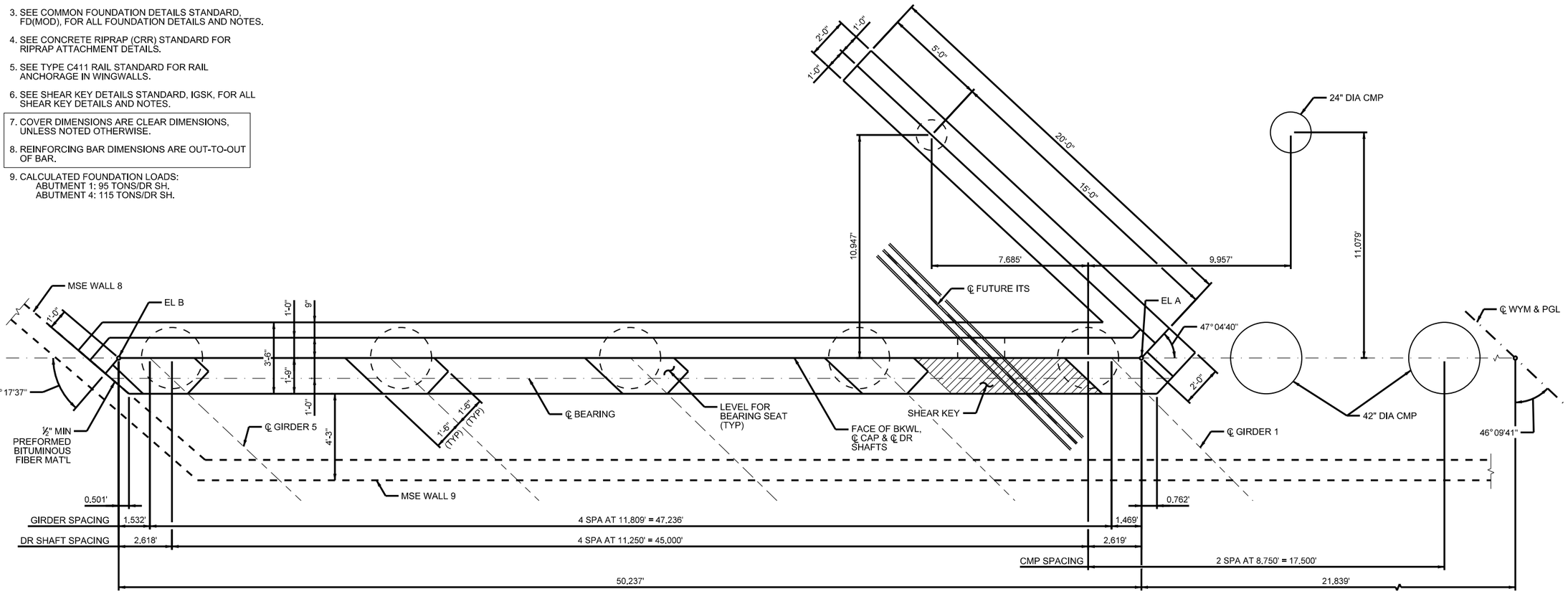

PLAN

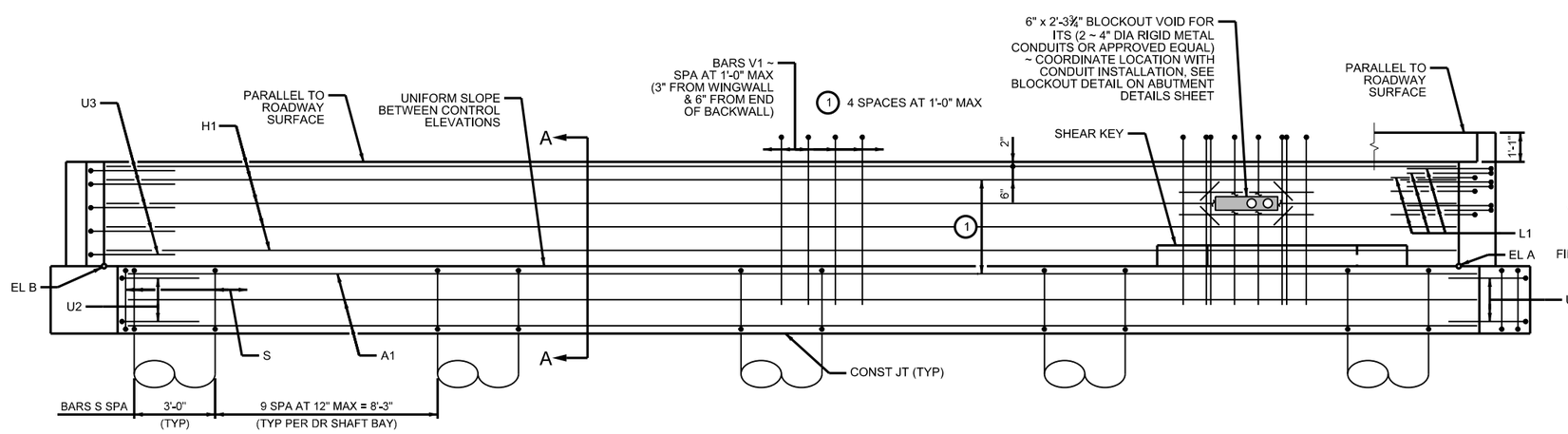

ELEVATION

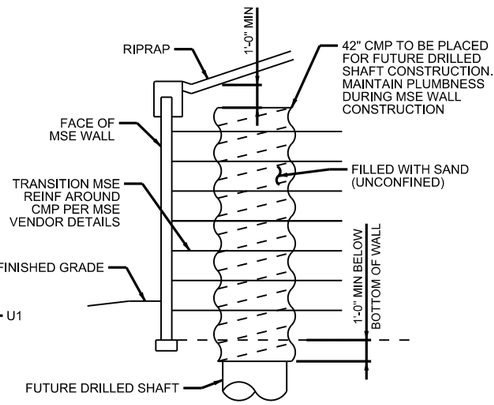

CORRUGATED METAL PIPE (CMP) DETAIL

(NTS, WINGWALL SIMILAR)

CONTROL ELEVATIONS

ABUT	EL A	EL B
1	762.25	760.84

HL93 LOADING

WYOMING SPRINGS
SEGMENT 1
ROUND ROCK, TX

ROUND ROCK, TEXAS

AGUIRRE & FIELDS
ENGINEERING INNOVATORS
TBPE FIRM REGISTRATION # 739

Revision No.	Date	Description

STATE OF TEXAS
RYAN J. WILLIAMS
110418
LICENSED PROFESSIONAL ENGINEER
4/17/2023

100% SUBMITTAL

Project No.:	36179
Issued:	3/30/2023
Drawn By:	QBH
Checked By:	RJW
Scale:	

Sheet Title
NB WYOMING SPRINGS AT DRY FORK CREEK ABUTMENT 1

288
Sheet Number

NORTH OFFICE
AUSTIN, TEXAS
1811 Aldrich St
Austin, TX 78723
Date:
3/30/2023
User: RJWilliams
File: 64134 PM
CITY OF ROUND ROCK
GIT Dwg
Plotted:

GENERAL NOTES:
1. SEE ABUTMENT 1 SHEET FOR GENERAL NOTES.

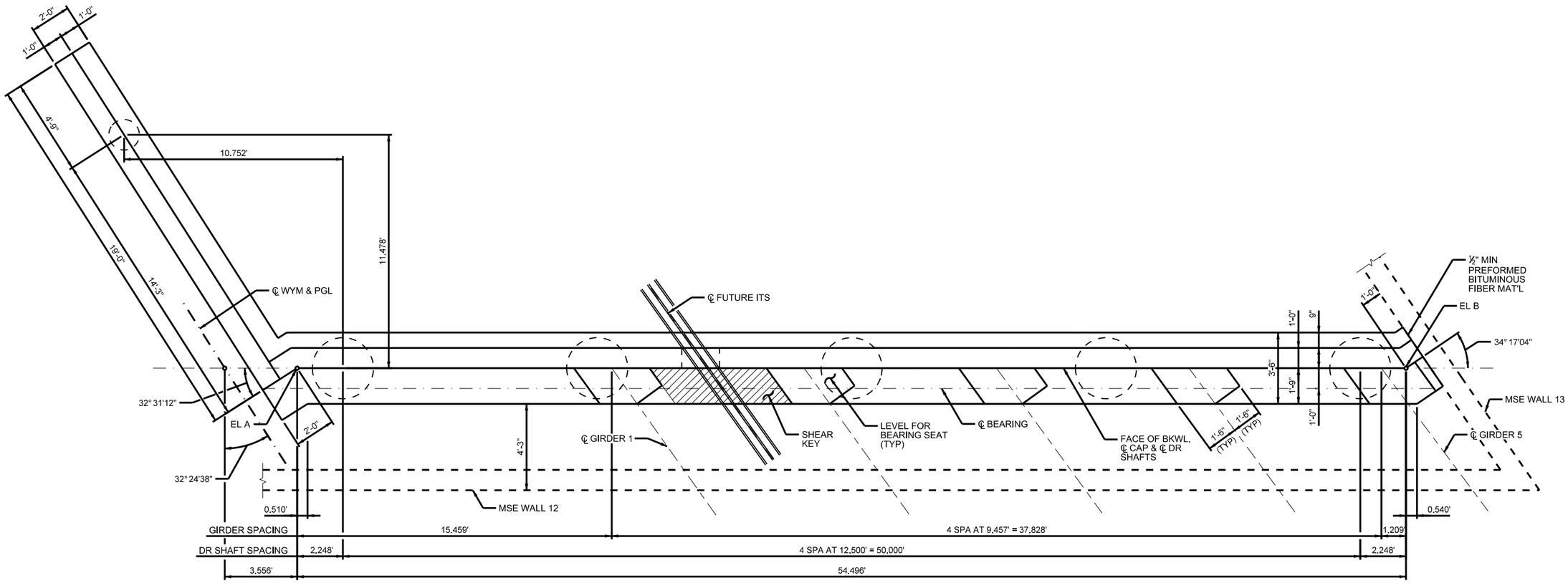

PLAN

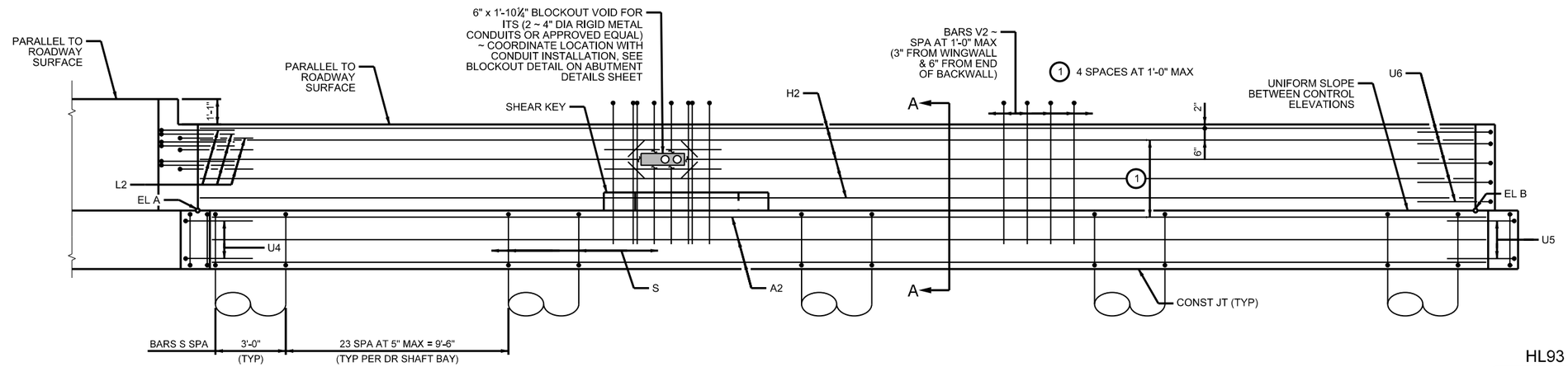

ELEVATION

HL93 LOADING

CONTROL ELEVATIONS

ABUT	EL A	EL B
4	771.41	769.27

WYOMING SPRINGS
SEGMENT 1
ROUND ROCK, TX

ROUND ROCK, TEXAS

AGUIRRE & FIELDS
ENGINEERING INNOVATORS
TBPE FIRM REGISTRATION # 739

Revision No.	Date	Description

STATE OF TEXAS
RYAN J. WILLIAMS
110418
LICENSED
PROFESSIONAL ENGINEER
4/17/2023

100% SUBMITTAL

Project No.:	36179
Issued:	3/30/2023
Drawn By:	QBH
Checked By:	RJW
Scale:	

Sheet Title
NB WYOMING SPRINGS AT DRY FORK CREEK ABUTMENT 4

289
Sheet Number

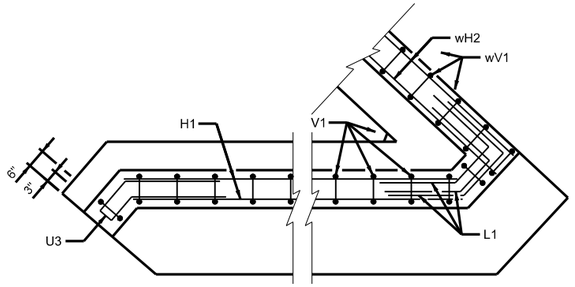

BACKWALL

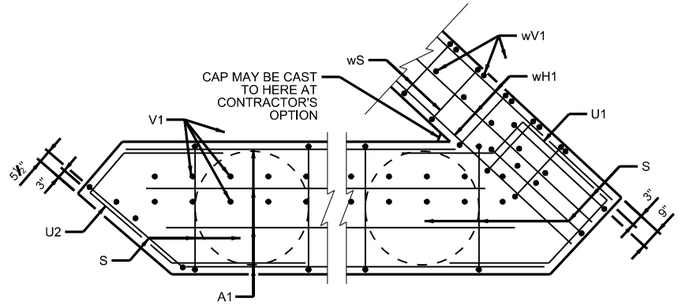

CAP

ABUTMENT 1 CORNER DETAILS

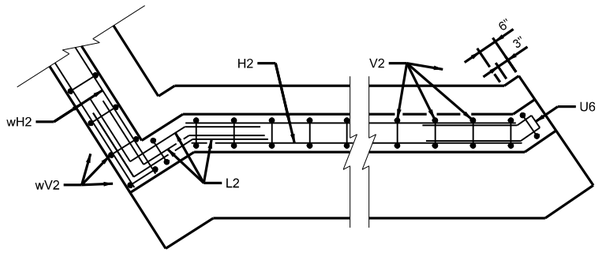

BACKWALL

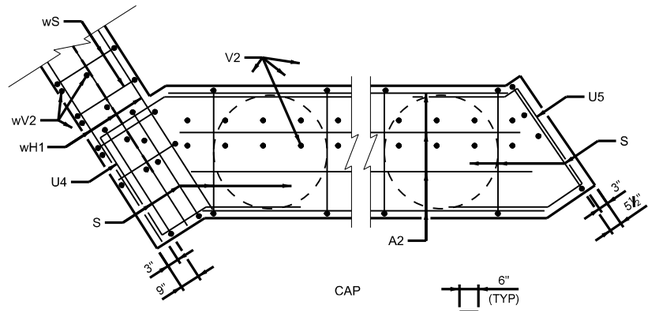

CAP

ABUTMENT 4 CORNER DETAILS

BEARING SEAT DETAIL

(BEARING SURFACE MUST BE CLEAN AND FREE OF ALL LOOSE MATERIAL BEFORE PLACING BEARING PAD.)

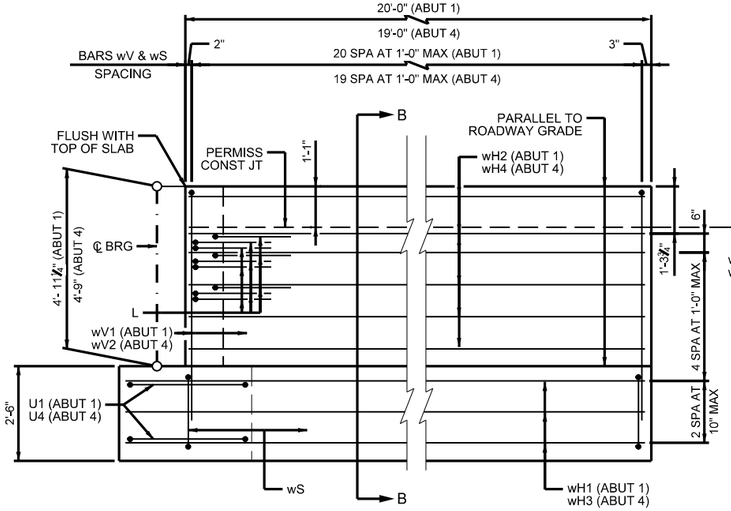

WINGWALL ELEVATION

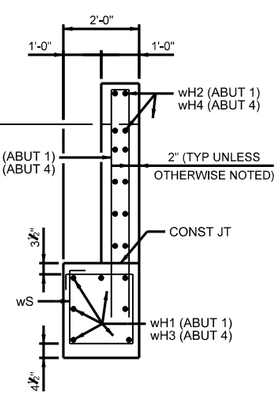

SECTION B-B

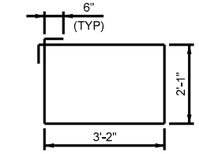

BARS S

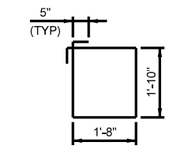

BARS wS

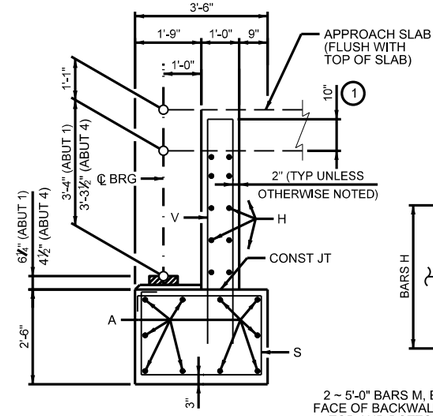

SECTION A-A

GENERAL NOTES:
1. SEE ABUTMENT 1 SHEET FOR GENERAL NOTES.

1. INCREASE AS REQUIRED TO MAINTAIN 3" FROM FINISHED GRADE
2. 1" TYP, ¾" MIN CLEARANCE BETWEEN DUCTS

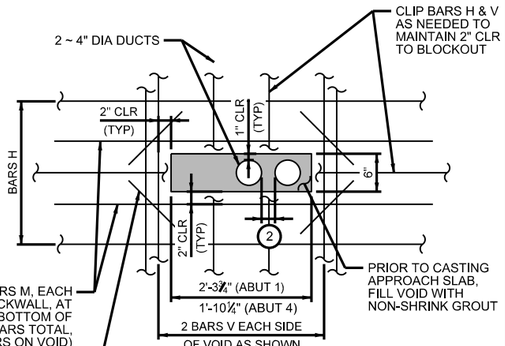

BLOCKOUT DETAIL

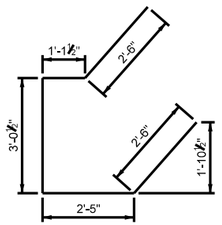

BARS U1

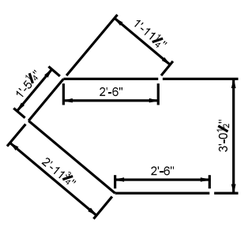

BARS U2

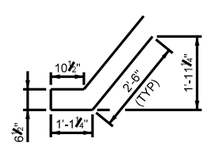

BARS U3

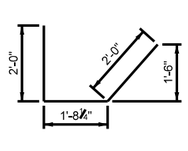

BARS L1

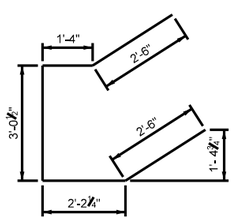

BARS U4

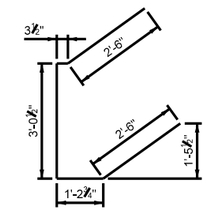

BARS U5

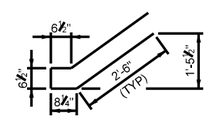

BARS U6

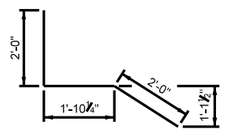

BARS L2

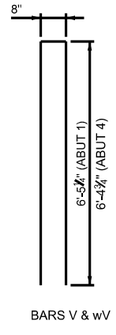

BARS V & wV

HL93 LOADING

TABLE OF ESTIMATED ABUTMENT 1 QUANTITIES				
BAR	NO	SIZE	LENGTH	WEIGHT
A1	10	#11	50'-3"	2,670
H1	10	#6	50'-3"	755
L1	9	#6	5'-8"	77
M	4	#5	5'-0"	21
S	45	#5	11'-6"	540
U1	2	#6	11'-7"	35
U2	2	#6	9'-5"	29
U3	5	#6	7'-6"	57
V1	54	#5	13'-7"	763
wH1	7	#6	21'-5"	226
wH2	12	#6	19'-8"	355
wS	21	#4	7'-10"	110
wV1	21	#5	13'-7"	297
X	8	#5	1'-0"	9
REINFORCING STEEL			LB	5,944
CLASS "C" CONC			CY	32.4

TABLE OF ESTIMATED ABUTMENT 4 QUANTITIES				
BAR	NO	SIZE	LENGTH	WEIGHT
A2	10	#11	54'-6"	2,896
H2	10	#6	54'-6"	819
L2	9	#6	5'-10"	80
M	4	#5	5'-0"	21
S	101	#5	11'-6"	1,212
U4	2	#6	11'-7"	35
U5	2	#6	9'-7"	29
U6	5	#6	6'-9"	51
V2	58	#5	13'-6"	815
wH3	7	#6	20'-5"	215
wH4	12	#6	18'-8"	337
wS	20	#4	7'-10"	105
wV2	20	#5	13'-6"	281
X	8	#5	1'-0"	9
REINFORCING STEEL			LB	6,905
CLASS "C" CONC			CY	33.4

WYOMING SPRINGS
SEGMENT 1
ROUND ROCK, TX

ROUND ROCK, TEXAS

AGUIRRE & FIELDS
ENGINEERING INNOVATORS
TBPE FIRM REGISTRATION # 739

Revision No.	Date	Description

STATE OF TEXAS
RYAN J. WILLIAMS
110418
LICENSED
PROFESSIONAL ENGINEER
4/17/2023

100% SUBMITTAL

Project No.:	36179
Issued:	3/30/2023
Drawn By:	QBH
Checked By:	RJW
Scale:	

Sheet Title
NB WYOMING SPRINGS AT DRY FORK CREEK ABUTMENT DETAILS

290
Sheet Number

NORTH OFFICE
ROUND ROCK

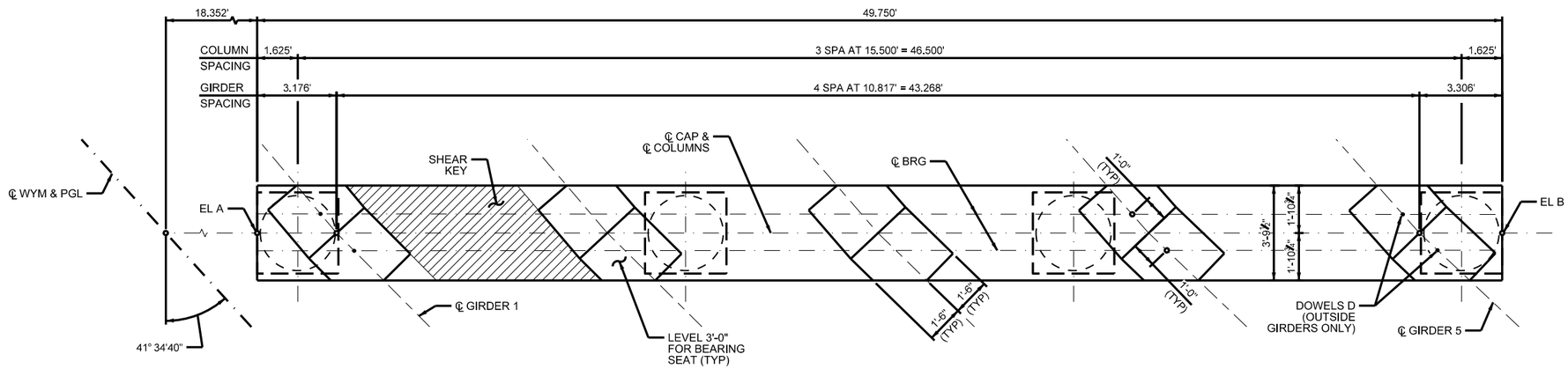

PLAN

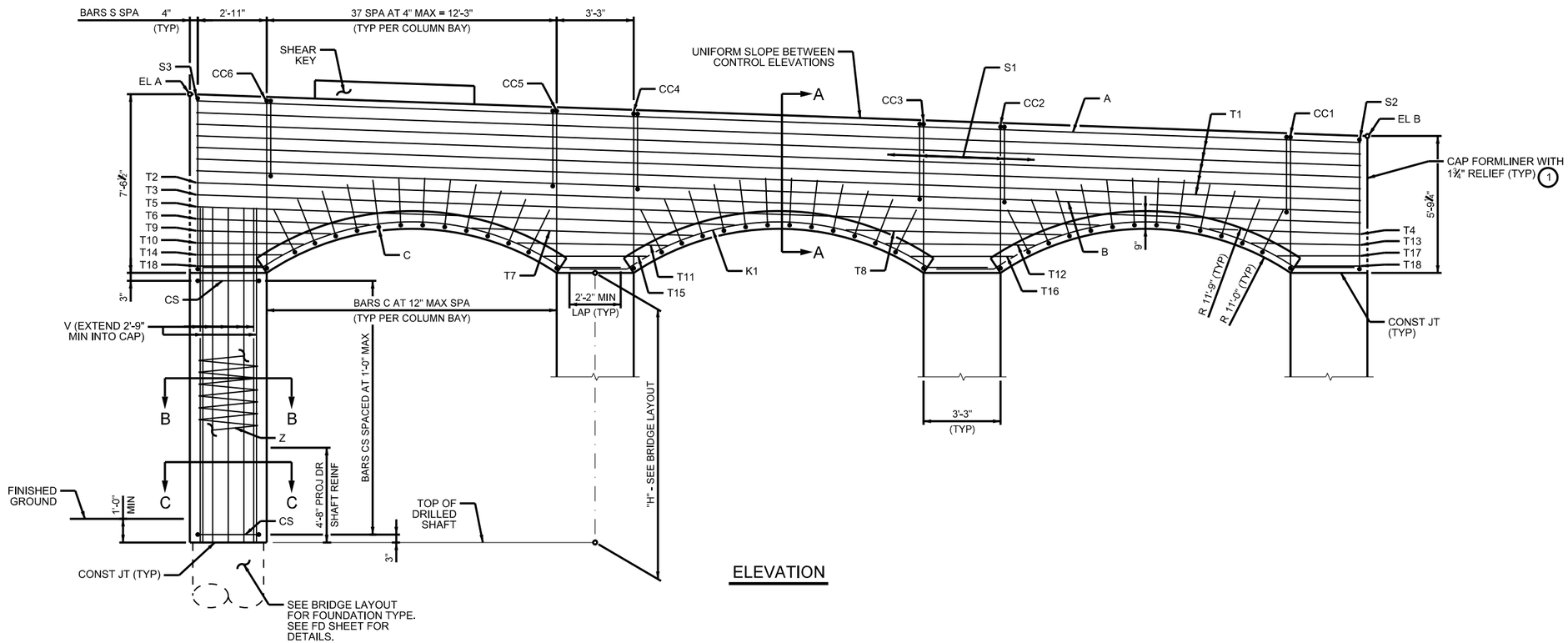

ELEVATION

GENERAL NOTES:
1. DESIGNED IN ACCORDANCE WITH AASHTO LRFD BRIDGE DESIGN SPECIFICATIONS, 9TH EDITION (2020).
2. SEE BRIDGE LAYOUT FOR FOUNDATION TYPE, SIZE, AND LENGTH.
3. SEE COMMON FOUNDATION DETAILS STANDARD, FD(MOD), FOR ALL FOUNDATION DETAILS AND NOTES.
4. SEE SHEAR KEY DETAILS STANDARD, IGSK, FOR ALL SHEAR KEY DETAILS AND NOTES.
5. SEE "AESTHETIC DETAILS" SHEETS FOR AESTHETIC INFORMATION.
6. COVER DIMENSIONS ARE CLEAR DIMENSIONS, UNLESS NOTED OTHERWISE.
7. REINFORCING BAR DIMENSIONS ARE OUT-TO-OUT OF BAR.
8. CALCULATED FOUNDATION LOADS:
   BENT 2: 160 TONS/DR SH.
   BENT 3: 160 TONS/DR SH.

MATERIAL NOTES:
1. PROVIDE CLASS C CONCRETE STRENGTH (f'c = 3600 PSI).
2. PROVIDE GRADE 60 REINFORCING STEEL.
3. GALVANIZE DOWEL BARS D.

(1) SEE AESTHETIC DETAILS SHEET.

HL93 LOADING

CONTROL ELEVATIONS

BENT	EL A	EL B
2	764.63	762.86

WYOMING SPRINGS
SEGMENT 1
ROUND ROCK, TX

ROUND ROCK, TEXAS

AGUIRRE & FIELDS
ENGINEERING INNOVATORS
TBPE FIRM REGISTRATION # 739

Revision No.	Date	Description

STATE OF TEXAS
RYAN J. WILLIAMS
110418
LICENSED PROFESSIONAL ENGINEER
4/17/2023

100% SUBMITTAL

Project No.:	36179
Issued:	3/30/2023
Drawn By:	QBH
Checked By:	RJW
Scale:	

Sheet Title
NB WYOMING SPRINGS AT DRY FORK CREEK BENT 2

291
Sheet Number

NORTH OFFICE
NOT FOR CONSTRUCTION
1911-Dgn.dgn
Default
3/30/2023
6:42:39 PM
USER: default
CITY OF ROUND ROCK
Design
DETAILS

GENERAL NOTES:
1. SEE BENT 2 SHEET FOR GENERAL NOTES.

(1) SEE AESTHETIC DETAILS SHEET.

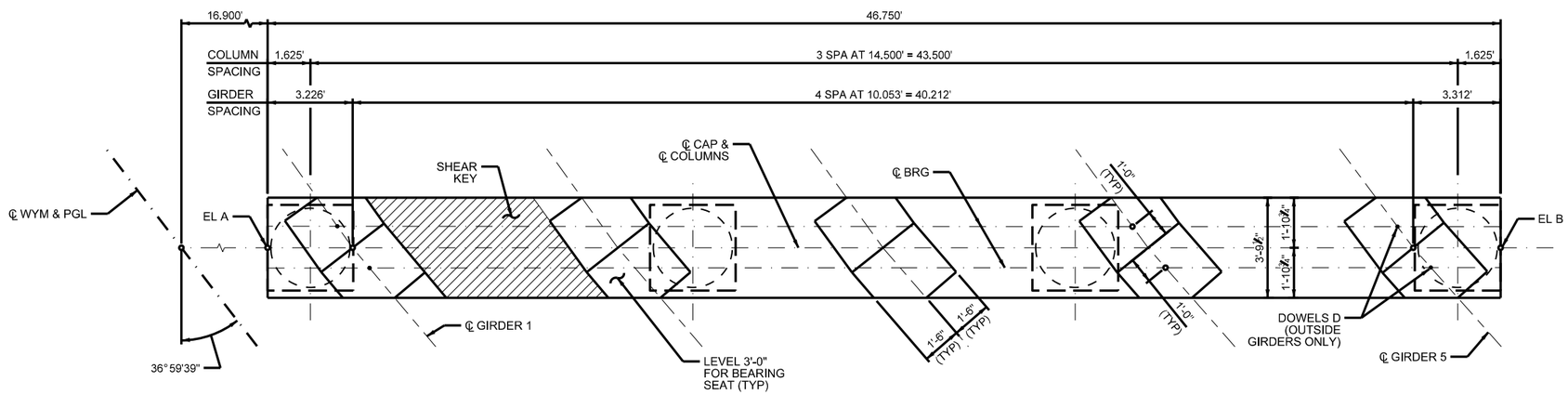

PLAN

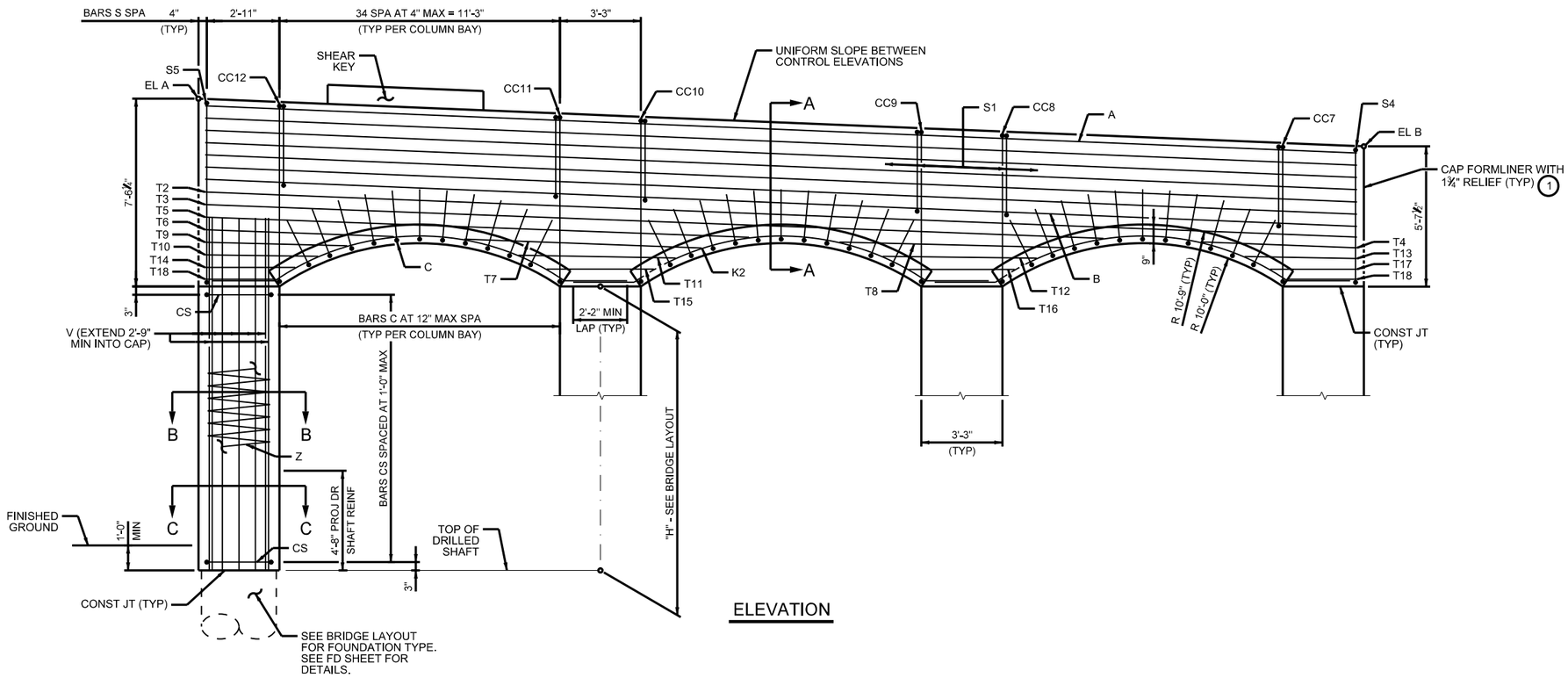

ELEVATION

HL93 LOADING

CONTROL ELEVATIONS

BENT	EL A	EL B
3	767.63	765.72

WYOMING SPRINGS
SEGMENT 1
ROUND ROCK, TX

ROUND ROCK, TEXAS

AGUIRRE & FIELDS
ENGINEERING INNOVATORS
TBPE FIRM REGISTRATION # 739

Revision No.	Date	Description

STATE OF TEXAS
RYAN J. WILLIAMS
110418
LICENSED PROFESSIONAL ENGINEER
4/17/2023

100% SUBMITTAL

Project No.:	36179
Issued:	3/30/2023
Drawn By:	QBH
Checked By:	RJW
Scale:	

Sheet Title
NB WYOMING SPRINGS AT DRY FORK CREEK BENT 3

292
Sheet Number

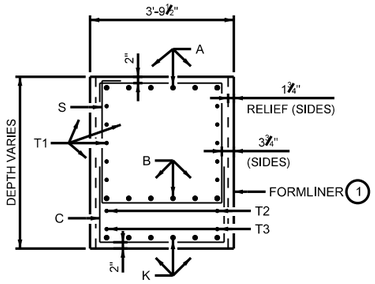

SECTION A-A

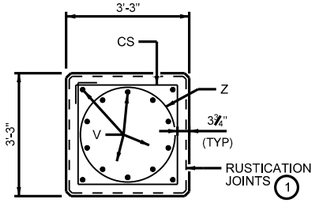

SECTION B-B

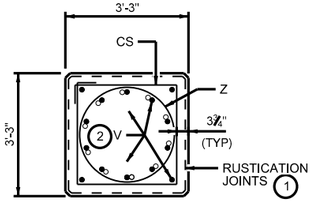

SECTION C-C

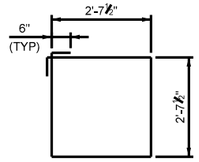

BARS CS

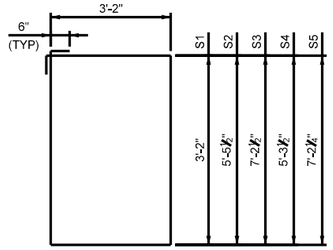

BARS S

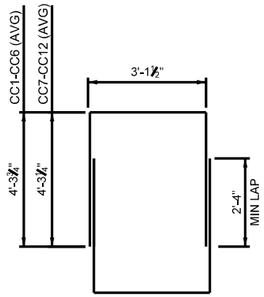

BARS CC

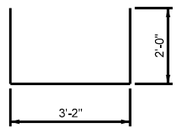

BARS C

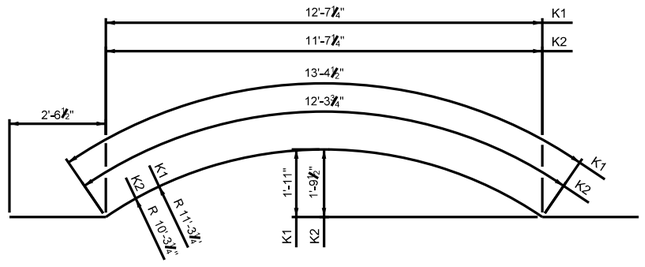

BARS K

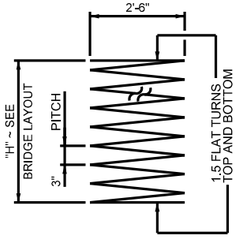

BARS Z

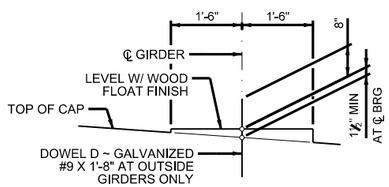

BEARING SEAT DETAIL

(BEARING SURFACE MUST BE CLEAN AND FREE OF ALL LOOSE MATERIAL BEFORE PLACING BEARING PAD.)

TABLE OF ESTIMATED CAP QUANTITIES BENT 2

BAR	NO	SIZE	LENGTH	WEIGHT
A	6	#11	49'-2"	1,567
B	6	#11	49'-2"	1,567
C	36	#5	7'-2"	270
D	4	#9	1'-8"	23
K1	18	#6	18'-5"	499
S1	114	#5	13'-8"	1,625
S2	1	#5	18'-3"	20
S3	1	#5	21'-9"	23
CC1-CC6 (AVG)	12	#5	11'-9"	148
T1	10	#5	49'-2"	513
T2	2	#5	49'-2"	103
T3	2	#5	38'-2"	80
T4	2	#5	6'-5"	14
T5	2	#5	22'-9"	48
T6	2	#5	7'-3"	16
T7	2	#5	9'-4"	20
T8	2	#5	9'-1"	20
T9	2	#5	5'-8"	12
T10	2	#5	4'-6"	10
T11	2	#5	6'-4"	14
T12	2	#5	6'-4"	14
T13	2	#5	4'-7"	10
T14	2	#5	3'-7"	8
T15	2	#5	4'-4"	10
T16	2	#5	4'-4"	10
T17	2	#5	3'-6"	8
T18	4	#5	2'-9"	12
REINFORCING STEEL			LB	6,664
CLASS "C" CONC (CAP)			CY	41.2

TABLE OF ESTIMATED CAP QUANTITIES BENT 3

BAR	NO	SIZE	LENGTH	WEIGHT
A	6	#11	46'-2"	1,471
B	6	#11	46'-2"	1,471
C	33	#5	7'-2"	247
D	4	#9	1'-8"	23
K2	18	#6	17'-5"	471
S1	105	#5	13'-8"	1,497
S4	1	#5	17'-11"	19
S5	1	#5	21'-9"	23
CC7-CC12 (AVG)	12	#5	11'-8"	147
T1	10	#5	46'-2"	482
T2	2	#5	46'-2"	97
T3	2	#5	36'-0"	76
T4	2	#5	6'-3"	14
T5	2	#5	21'-9"	46
T6	2	#5	7'-6"	16
T7	2	#5	9'-6"	20
T8	2	#5	9'-0"	19
T9	2	#5	5'-8"	12
T10	2	#5	4'-6"	10
T11	2	#5	6'-4"	14
T12	2	#5	6'-2"	13
T13	2	#5	4'-6"	10
T14	2	#5	3'-7"	8
T15	2	#5	4'-4"	9
T16	2	#5	4'-3"	9
T17	2	#5	3'-5"	8
T18	4	#5	2'-9"	12
REINFORCING STEEL			LB	6,244
CLASS "C" CONC (CAP)			CY	38.7

TABLE OF ESTIMATED COLUMN QUANTITIES (3)

BENT	"H"	BARS V 56 ~ #11		BARS Z 4 ~ #4		BARS CS #5 AT 1-0" MAX			REINF STEEL	CLASS "C" CONC (COL)
NO.	HEIGHT	LENGTH	WEIGHT	LENGTH	WEIGHT	NO.	LENGTH	WEIGHT	LB	CY
2	11	13'-9"	4,091	369'-4"	987	48	11'-6"	576	5,654	17.3
3	14	16'-9"	4,984	463'-7"	1239	60	11'-6"	720	6,942	22.0

GENERAL NOTES:
1. SEE BENT 2 SHEET FOR GENERAL NOTES.

(1) SEE AESTHETIC DETAILS SHEET.

(2) LAP V BARS INSIDE SPIRAL WITH PROJECTED DRILLED SHAFT REINFORCEMENT.

(3) REINFORCEMENT SHOWN IS BASED ON "H" VALUES SHOWN. FOR EACH LINEAR FOOT VARIATION IN COLUMN HEIGHT, MAKE THE FOLLOWING ADJUSTMENTS:
BARS V, ADD/SUBTRACT 1'-0"
BARS Z, ADD/SUBTRACT 31'-5"
BARS CS, ADD/SUBTRACT 4 BARS
REINFORCING STEEL, ADD/SUBTRACT 429 LB
CL C CONC (COL), ADD/SUBTRACT 1.6 CY

HL93 LOADING

WYOMING SPRINGS
SEGMENT 1
ROUND ROCK, TX

ROUND ROCK, TEXAS

AGUIRRE & FIELDS
ENGINEERING INNOVATORS
TBPE FIRM REGISTRATION # 739

Revision No.	Date	Description

STATE OF TEXAS
RYAN J. WILLIAMS
110418
LICENSED PROFESSIONAL ENGINEER
4/17/2023

100% SUBMITTAL

Project No.:	36179
Issued:	3/30/2023
Drawn By:	QBH
Checked By:	RJW
Scale:	

Sheet Title
NB WYOMING SPRINGS AT DRY FORK CREEK BENT DETAILS

293
Sheet Number

NORTH OFFICE
AUSTIN, TEXAS
3/30/2023 6:42:39 PM USER: cwhall DWG: 36179-Cover.dgn CITY OF ROUND ROCK

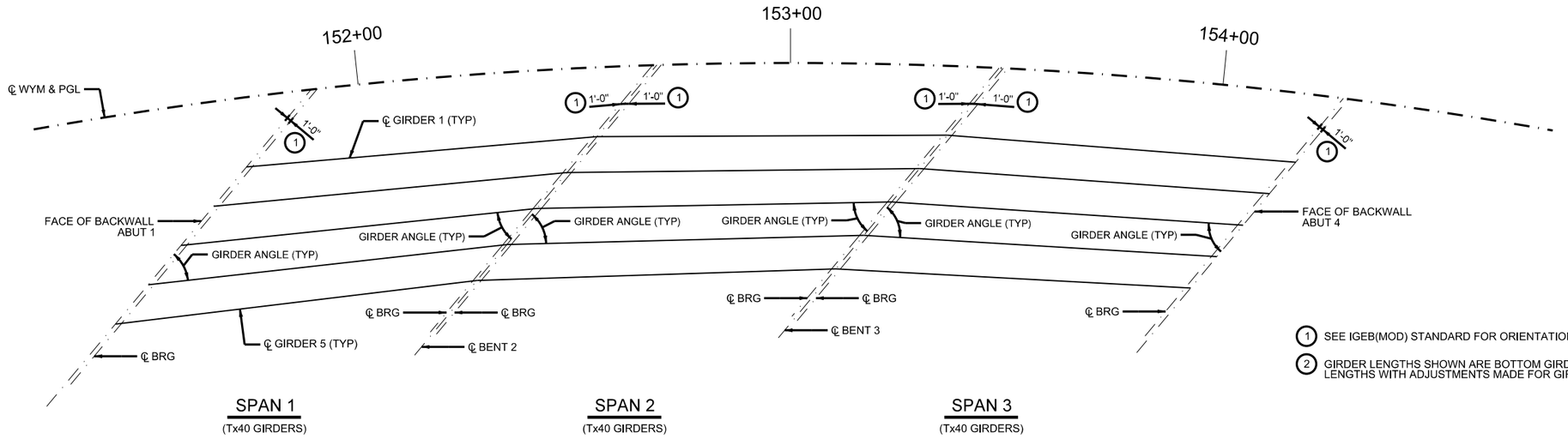

1. SEE IGEB(MOD) STANDARD FOR ORIENTATION OF DIMENSION.
2. GIRDER LENGTHS SHOWN ARE BOTTOM GIRDER FLANGE LENGTHS WITH ADJUSTMENTS MADE FOR GIRDER SLOPE.

BENT REPORT

ABUT NO. 1 (N 56 17 29.00 W)
DISTANCE BETWEEN STATION LINE AND GRDR 1, 23.308 R

		GRDR SPAC. (C.L. ABUT)	GRDR ANGLE D	M	S
SPAN 1	GRDR 1	0.000	45	13	29
	GRDR 2	11.809	44	43	57
	GRDR 3	11.809	44	14	55
	GRDR 4	11.809	43	46	22
	GRDR 5	11.809	43	18	19
	TOTAL	47.236			

BENT NO. 2 (N 56 17 29.00 W)
DISTANCE BETWEEN STATION LINE AND GRDR 1, 21.527 R

		GRDR SPAC. (C.L. BENT)	GRDR ANGLE D	M	S
SPAN 1	GRDR 1	0.000	45	13	29
	GRDR 2	10.817	44	43	57
	GRDR 3	10.817	44	14	55
	GRDR 4	10.817	43	46	22
	GRDR 5	10.817	43	18	19
	TOTAL	43.268			

BENT NO. 2 (N 56 17 29.00 W)
DISTANCE BETWEEN STATION LINE AND GRDR 1, 21.527 R

		GRDR SPAC. (C.L. BENT)	GRDR ANGLE D	M	S
SPAN 2	GRDR 1	0.000	49	56	43
	GRDR 2	10.817	49	32	1
	GRDR 3	10.817	49	7	36
	GRDR 4	10.817	48	43	29
	GRDR 5	10.817	48	19	40
	TOTAL	43.268			

BENT NO. 3 (N 56 17 29.00 W)
DISTANCE BETWEEN STATION LINE AND GRDR 1, 20.126 R

		GRDR SPAC. (C.L. BENT)	GRDR ANGLE D	M	S
SPAN 2	GRDR 1	0.000	49	56	43
	GRDR 2	10.053	49	32	1
	GRDR 3	10.053	49	7	36
	GRDR 4	10.053	48	43	29
	GRDR 5	10.053	48	19	40
	TOTAL	40.212			

BENT NO. 3 (N 56 17 29.00 W)
DISTANCE BETWEEN STATION LINE AND GRDR 1, 20.126 R

		GRDR SPAC. (C.L. BENT)	GRDR ANGLE D	M	S
SPAN 3	GRDR 1	0.000	54	38	54
	GRDR 2	10.053	54	18	14
	GRDR 3	10.053	53	57	45
	GRDR 4	10.053	53	37	27
	GRDR 5	10.053	53	17	20
	TOTAL	40.212			

ABUT NO. 4 (N 56 17 29.00 W)
DISTANCE BETWEEN STATION LINE AND GRDR 1, 19.015 R

		GRDR SPAC. (C.L. ABUT)	GRDR ANGLE D	M	S
SPAN 3	GRDR 1	0.000	54	38	54
	GRDR 2	9.457	54	18	14
	GRDR 3	9.457	53	57	45
	GRDR 4	9.457	53	37	27
	GRDR 5	9.457	53	17	20
	TOTAL	37.828			

GIRDER REPORT

GRDR REPORT, SPAN 1

	HORIZONTAL DISTANCE C-C BENT	C-C BRG.	TRUE DISTANCE (2) BOT. BM. FLG.	GRDR SLOPE
GRDR 1	81.223	78.814	80.65	0.0269
GRDR 2	81.924	79.503	81.35	0.0261
GRDR 3	82.631	80.198	82.05	0.0253
GRDR 4	83.345	80.899	82.76	0.0244
GRDR 5	84.063	81.605	83.47	0.0235

GRDR REPORT, SPAN 2

	HORIZONTAL DISTANCE C-C BENT	C-C BRG.	TRUE DISTANCE (2) BOT. BM. FLG.	GRDR SLOPE
GRDR 1	80.873	78.873	80.43	0.0370
GRDR 2	81.367	79.367	80.92	0.0366
GRDR 3	81.865	79.865	81.42	0.0361
GRDR 4	82.367	80.367	81.92	0.0355
GRDR 5	82.873	80.873	82.42	0.0349

GRDR REPORT, SPAN 3

	HORIZONTAL DISTANCE C-C BENT	C-C BRG.	TRUE DISTANCE (2) BOT. BM. FLG.	GRDR SLOPE
GRDR 1	80.616	78.390	80.12	0.0400
GRDR 2	80.963	78.732	80.47	0.0403
GRDR 3	81.313	79.076	80.82	0.0407
GRDR 4	81.665	79.423	81.17	0.0410
GRDR 5	82.020	79.773	81.53	0.0413

HL93 LOADING

WYOMING SPRINGS
SEGMENT 1
ROUND ROCK, TX

ROUND ROCK, TEXAS

AGUIRRE & FIELDS
ENGINEERING INNOVATORS
TBPE FIRM REGISTRATION # 739

Revision No.	Date	Description

STATE OF TEXAS
RYAN J. WILLIAMS
110418
LICENSED
PROFESSIONAL ENGINEER
4/17/2023

100% SUBMITTAL

Project No.:	36179
Issued:	3/30/2023
Drawn By:	QBH
Checked By:	RJW
Scale:	

Sheet Title
NB WYOMING SPRINGS AT DRY FORK CREEK FRAMING PLAN

294
Sheet Number

NORTH OFFICE
NORTH OFFICE
\\ATX1-Comm\
Projects\36179\Drawings\Layout\Framing Plan.dwg
Date:
3/30/2023
6:42:14 PM
User: default
CITY OF ROUND ROCK
3/30/2023

TABLE OF DEAD LOAD DEFLECTIONS

SPAN NO.	GIRDER NO.	"A" FT	"B" FT
1	1	0.061	0.087
	2	0.066	0.094
	3	0.068	0.096
	4	0.070	0.099
	5	0.057	0.081
2	1	0.061	0.087
	2	0.066	0.093
	3	0.067	0.095
	4	0.068	0.097
	5	0.055	0.078
3	1	0.060	0.085
	2	0.063	0.090
	3	0.064	0.091
	4	0.065	0.092
	5	0.052	0.074

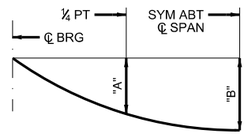

DEAD LOAD DEFLECTION DIAGRAM

NOTE: DEFLECTIONS SHOWN ARE DUE TO PRESTRESSED CONCRETE PANELS AND CAST-IN-PLACE SLAB ONLY. (Ec = 5000 KSI) ADJUST DEFLECTIONS BASED ON FIELD OBSERVATIONS AS NEEDED.

GENERAL NOTES:
1. DESIGNED IN ACCORDANCE WITH AASHTO LRFD BRIDGE DESIGN SPECIFICATIONS, 9TH EDITION (2020).
2. SEE STANDARDS PCP AND PCP-FAB FOR PANEL DETAILS NOT SHOWN.
3. SEE STANDARD IGTS FOR THICKENED SLAB END DETAILS.
4. SEE STANDARD IGMS FOR MISCELLANEOUS DETAILS.
5. SEE STANDARD SEJ-M FOR SEALED EXPANSION JOINT DETAILS.
6. SEE STANDARD BRSM FOR ADDITIONAL DETAILS AT SIDEWALKS.
7. SEE STANDARD BS-EJCP FOR SIDEWALK COVER PLATE DETAILS.
8. SEE STANDARD BL FOR BRIDGE LIGHTING DETAILS.
9. SEE APPLICABLE RAIL DETAILS FOR RAIL ANCHORAGE IN SLAB.
10. SEE "AESTHETIC DETAILS" SHEETS FOR AESTHETIC INFORMATION.
11. COVER DIMENSIONS ARE CLEAR DIMENSIONS UNLESS NOTED OTHERWISE.

MATERIAL NOTES:
1. PROVIDE CLASS S CONCRETE (f'c = 4000 PSI).
2. PROVIDE GRADE 60 REINFORCING STEEL.
3. PROVIDE BAR LAPS, WHERE REQUIRED, AS FOLLOWS: UNCOATED ~ #4 = 1'-7"
4. DEFORMED WELDED WIRE REINFORCEMENT (WWR)(ASTM A1064) OF EQUAL SIZE AND SPACING MAY BE SUBSTITUTED FOR BARS A, AA, D, OA, P, OR T UNLESS NOTED OTHERWISE.

(1) CONDUIT FOR ILLUMINATION POLE BRACKET SHALL BE PLACED PRIOR TO REINFORCED CONCRETE SLAB POUR.

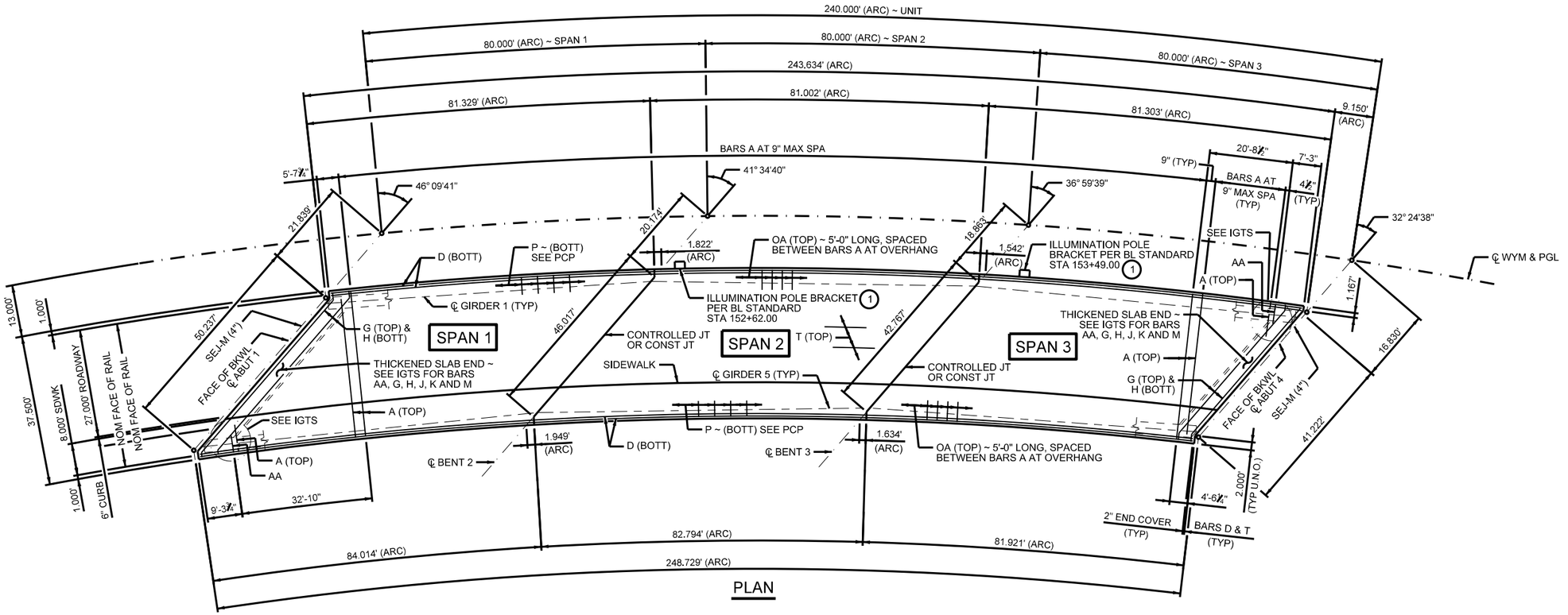

PLAN

HL93 LOADING

WYOMING SPRINGS
SEGMENT 1
ROUND ROCK, TX

ROUND ROCK, TEXAS

AGUIRRE & FIELDS
ENGINEERING INNOVATORS
TBPE FIRM REGISTRATION # 739

Revision No.	Date	Description

STATE OF TEXAS
RYAN J. WILLIAMS
110418
LICENSED
PROFESSIONAL ENGINEER
4/17/2023

100% SUBMITTAL

Project No.:	36179
Issued:	3/30/2023
Drawn By:	QBH
Checked By:	RJW
Scale:	

Sheet Title
NB WYOMING SPRINGS AT DRY FORK CREEK
240.00' PCGU
SHEET 01 OF 02

295
Sheet Number

TABLE OF SECTION DEPTHS

SPAN NO.	GIRDER NO.	"X" AT ℄ BRG (2)	"Y" AT ℄ BRG	"Z" AT ℄ SPAN (3)
1	1 - 3	1'-1"	4'-5"	9 3/4"
	4			9 5/8"
	5			9 3/8"
2	1	1'-1 1/2"	4'-5 1/2"	10 3/8"
	2 & 3			10 1/4"
	4			10 1/8"
	5			9 5/8"
3	1	1'-0 1/2"	4'-4 1/2"	10 3/8"
	2 - 4			10 1/2"
	5			10 1/4"

TABLE OF ESTIMATED QUANTITIES

SPAN	REINF CONCRETE SLAB	REINF STEEL CONC SLAB (4)	BRIDGE SIDEWALK	REINF STEEL SIDEWALK (5)	PRESTR CONC GIRDERS (Tx40) (6)	TOTAL REINF STEEL
	SF	LB	SF	LB	LF	LB
1	3,099	7,127	797	1,753	410.28	8,880
2	3,070	7,062	786	1,729	407.11	8,791
3	3,051	7,016	778	1,712	404.11	8,728
TOTAL	9,220	21,205	2,361	5,195	1,221.50	26,400

GENERAL NOTES:
1. SEE SHEET 01 OF 02 FOR GENERAL NOTES.

(2) SEE STANDARD PCP FOR HAUNCH REINFORCING DETAIL.

(3) "Z" VALUE SHOWN IS AN APPROXIMATION BASED ON THEORETICAL GIRDER CAMBER, DEAD LOAD DEFLECTION, AND ROADWAY PROFILE.

(4) REINFORCING STEEL WEIGHT FOR CONCRETE SLAB IS CALCULATED USING AN APPROXIMATE FACTOR OF 2.3 LBS PER SQ FT.

(5) REINFORCING STEEL FOR SIDEWALK IS CALCULATED USING AN APPROXIMATE FACTOR OF 2.2 LBS PER SQ FT.

(6) GIRDER LENGTHS SHOWN ARE BOTTOM GIRDER FLANGE LENGTHS WITH ADJUSTMENTS MADE FOR GIRDER SLOPE.

(7) DESIGNED FOR A MAXIMUM LOAD OF 50 LB/FT (INCLUDES CONDUITS AND HANGERS).

BAR TABLE

BAR	SIZE
A	#4
AA	#5
D	#4
G	#4
H	#4
J	#4
K	#4
M	#4
OA	#5
P	#4
T	#4
UP	#4

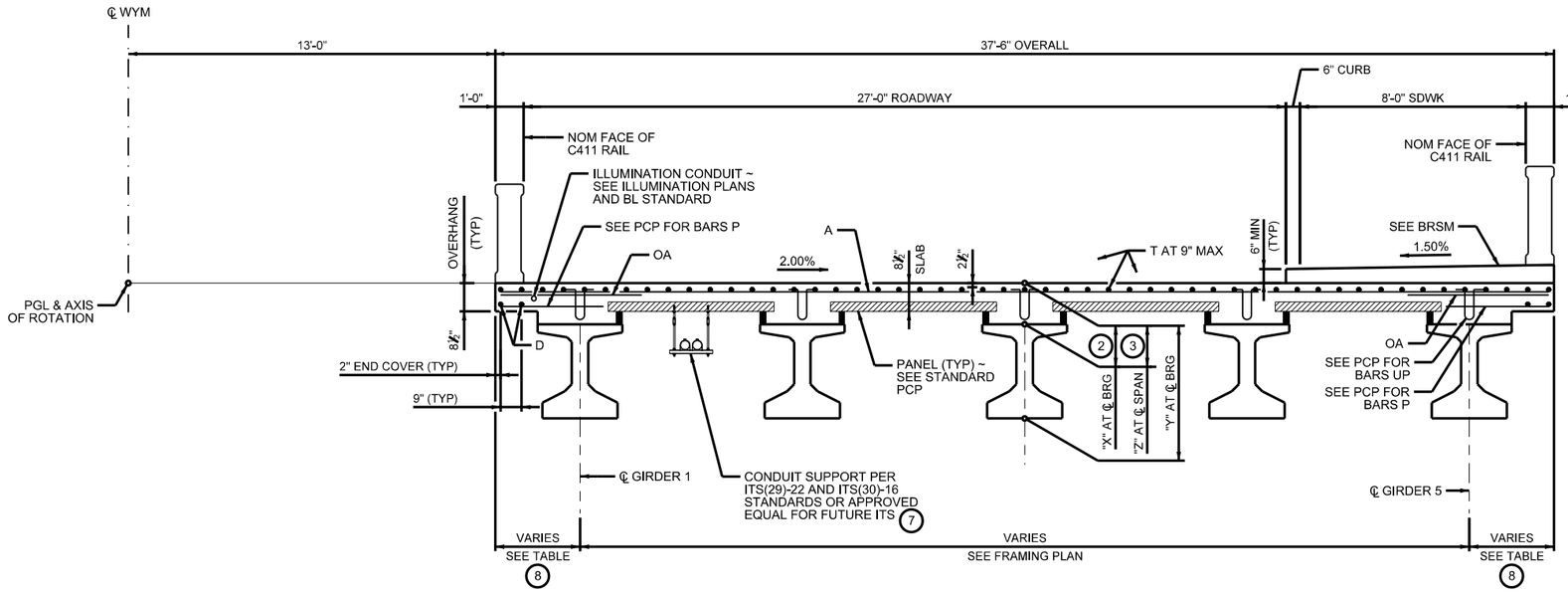

TYPICAL TRANSVERSE SECTION

(8) 3.000' RADIAL AT ℄ ABUTMENT AND BENT.

OVERHANG DIMENSIONS

SPAN	LT EDGE		RT EDGE	
	MIN	MAX	MIN	MAX
1	3.000'	3.838'	2.072'	3.000'
2	3.000'	3.831'	2.098'	3.000'
3	3.000'	3.826'	2.117'	3.000'

HL93 LOADING

WYOMING SPRINGS
SEGMENT 1
ROUND ROCK, TX

ROUND ROCK, TEXAS

AGUIRRE & FIELDS
ENGINEERING INNOVATORS
TBPE FIRM REGISTRATION # 739

Revision No.	Date	Description

STATE OF TEXAS
RYAN J. WILLIAMS
110418
LICENSED
PROFESSIONAL ENGINEER
4/17/2023

100% SUBMITTAL

Project No.:	36179
Issued:	3/30/2023
Drawn By:	QBH
Checked By:	RJW
Scale:	

Sheet Title
NB WYOMING SPRINGS
AT DRY FORK CREEK
240.00' PCGU
SHEET 02 OF 02

296
Sheet Number

AUSTIN OFFICE
(512) 451-8037
TBPE FIRM #739

Sheet1
CITY OF ROUND ROCK
USER: rwilliams
4:42:48 PM
3/30/2023

RAIL NOTES:

1. PROVIDE TYPE A WINDOWS FOR C411 RAIL ON BRIDGE AND RETAINING WALLS.

2. FOLLOW GUIDANCE ON STANDARD C411 FOR NUMBER OF SPAN PILASTERS AND WINDOW PLACEMENT. CONTINUE PLACEMENT OF TYPE A WINDOWS BEYOND THE ABUTMENT PILASTERS AND TERMINATE RAIL AT RETAINING WALL ENDS WITH A BENT PILASTER. PLACE ABUTMENT PILASTERS ON WINGWALLS. NO METAL BEAM GUARD FENCE IS REQUIRED AT RAIL ENDS.

3. PROVIDE 1" INSET STAR IN PLACE OF BRONZE STAR AT INSIDE FACE OF ABUTMENT PILASTERS. MATCH STAR DIMENSIONS ON STANDARD C411.

4. INCLUDE CONSTRUCTION YEAR AT INSIDE FACE OF ABUTMENT PILASTERS AS SHOWN ON STANDARD C411.

MATERIAL NOTES:

1. PROVIDE CLASS H CONCRETE STRENGTH (f'c = 4,000 PSI) FOR PRECAST PANELS.

2. PROVIDE GRADE 60 REINFORCING STEEL.

3. ALL SURFACES SHALL RECEIVE A SURFACE AREA I, CLASS C FINISH IN ACCORDANCE WITH TXDOT ITEM 427 EXCEPT WHERE FORM LINER IS SPECIFIED.

4. ALL EXPOSED SURFACES SHALL RECEIVE ANTI-GRAFFITI COATING IN ACCORDANCE WITH TXDOT ITEM 740 GRAFFITI REMOVAL AND ANTI-GRAFFITI COATING, USING A TYPE II SACRIFICIAL MATERIAL THAT IS CLEAR (I.E., TRANSPARENT) AND MEETS REQUIRMENTS OF TXDOT DMS-8111. THE MAP OF TEXAS SHOWN ON RW(MSE)(MOD) STANDARD WILL NOT BE REQUIRED.

5. PAYMENT FOR COATINGS WILL NOT BE MADE DIRECTLY BUT SHALL BE CONSIDERED SUBSIDIARY TO TXDOT ITEM 427 SURFACE FINISHES FOR CONCRETE.

6. PAYMENT FOR AESTHETIC DETAILS AND FORM LINERS WILL NOT BE MADE DIRECTLY BUT SHALL BE CONSIDERED SUBSIDIARY TO TXDOT ITEM 420 CONCRETE STRUCTURES OR TXDOT ITEM 423 RETAINING WALL.

FORM LINER NOTES:

1. ELASTOMERIC FORM LINER SHALL BE:

   SCOTT SYSTEM, INC.
   #167 "ASHLAR STONE"
   OR
   CUSTOM ROCK INTERNATIONAL
   #1103 "RUSTIC ASHLAR"

2. HIGH RELIEF SYSTEM INSTALLED PER MANUFACTURER RECOMMENDATIONS.

3. THE FORM LINER IS INTENDED TO SIMULATE HAND-LAYERED IRREGULAR STONE BLOCKS. THE PATTERN USED SHALL BE AS DETAILED OR AS APPROVED BY THE CITY OF ROUND ROCK.

4. PATTERN RELIEF SHALL PROVIDE 1½" OVERALL RELIEF INCLUDING TEXTURED, INDIVIDUAL STONE SURFACES AND JOINTS.

5. STONE SIZES SHALL VARY FROM 8" TO 30".

6. PROVIDE FORM LINER FINISH WHERE SHOWN ON BENT CAPS, COVER PANEL FACES, ARCH PANEL FACES AND MSE WALL PANEL FACES.

7. FORM LINER SHALL NOT BE PLACED CONTINUOUSLY ACROSS ARCH PANEL JOINTS.

8. NO FORM LINER PANEL JOINTS SHALL BE PERMITTED ON MSE WALL PANELS. SLIP JOINTS WILL BE PERMITTED WHERE SHOWN IN THE PLANS.

9. PROVIDE 2" REVEALS VERTICALLY AT 6' ON FORM LINER APPLICATION.

10. PROVIDE SURFACE PREPARATION AND OPAQUE WATERPROOFING TO ALL CONCRETE STRUCTURE SURFACES.

CITY OF ROUND ROCK LOGO NOTES:

1. THE CITY OF ROUND ROCK LOGO SHALL BE FORMED INTO A WALL PANEL NEXT TO EACH BRIDGE ABUTMENT. THE EXACT LOCATION OF EACH LOGO SHALL BE APPROVED BY THE ENGINEER. THE COST OF FORMING THE LOGO WILL NOT BE PAID FOR DIRECTLY, BUT SHALL BE INCIDENTAL TO THE TXDOT ITEM 423 "RETAINING WALL". THE LOGO SHALL BE NO SMALLER THAN 3'-2" AS MEASURED ALONG THE LENGTH OF ANY BRUSH STROKE.

2. BRUSH STROKES SHALL BE INSET 1" USING A CUSTOM ELASTOMERIC FORM LINER. THE CITY WILL PROVIDE A DIGITAL IMAGE FILE TO BE USED FOR FORM LINER FABRICATION. PAINT EACH BRUSH STROKE AS DESCRIBED UNDER COLOR NOTES.

COLOR NOTES:

1. PROVIDE COLOR SAMPLES FOR CITY APPROVAL OF MINIMUM 3' x 3' SIZE BASED ON CONTROL SAMPLE:

   1 (R:230, G:230, B:210) - PARTIAL RETAINING WALL, BENT CAP, & AESTHETIC PANEL FORMLINER.
   2 (R:230, G:220, B:175) - BRIDGE SLAB/SUP EDGE, MSE WALL COPING, BENT COLUMN, BENT CAP ARCH COPING, AESTHETIC PANEL COPING, CONCRETE TRAFFIC RAIL, PARTIAL RETAINING WALL, BENT CAP, & AESTHETIC PANEL FORMLINER.
   3 (R:225, G:200, B:115) - PARTIAL RETAINING WALL, BENT CAP, & AESTHETIC PANEL FORMLINER,
   4 (R:170, G:160, B:130) - BEAM OUTER FACE AND ALL SOFFITS, PARTIAL RETAINING WALL, BENT CAP, & AESTHETIC PANEL FORMLINER.

2. PROVIDE A FULL SIZE SAMPLE OF THE CITY OF ROUND ROCK LOGO FOR CITY APPROVAL USING THE FOLLOWING COLORS FOR EACH BRUSH STROKE:

   PANTONE 288 (R:0, G:40, B:122) - TOP BRUSH STROKE.
   PANTONE 1805 (R:187, G:45, B:63) - LEFT BRUSH STROKE.
   PANTONE 288 80% (R:66, G:87, B:142) - RIGHT BRUSH STROKE.

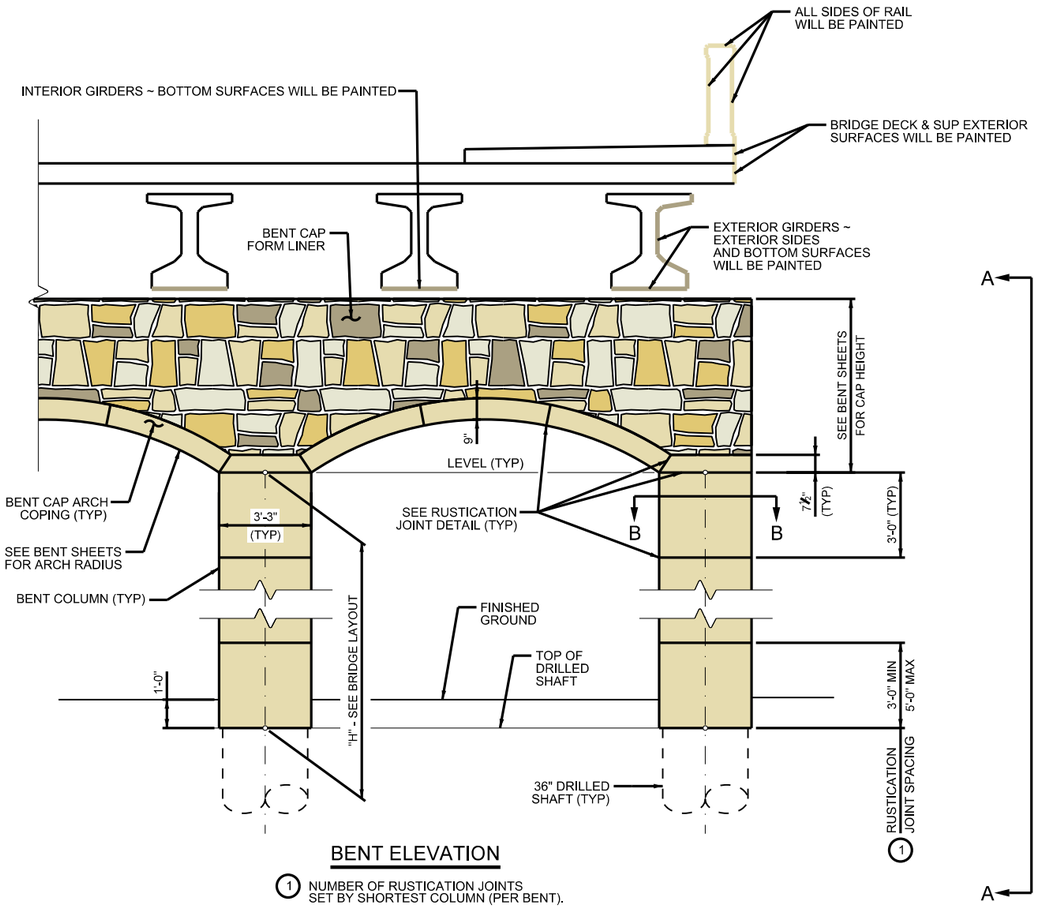

BENT ELEVATION

1 NUMBER OF RUSTICATION JOINTS SET BY SHORTEST COLUMN (PER BENT).

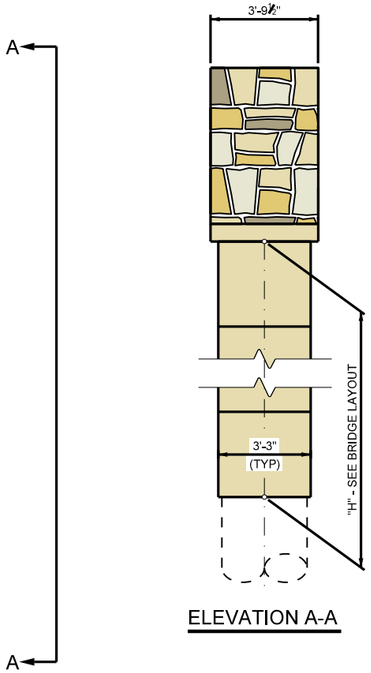

ELEVATION A-A

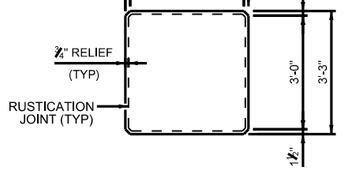

SECTION B-B

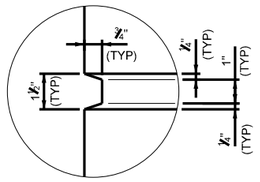

RUSTICATION JOINT DETAIL

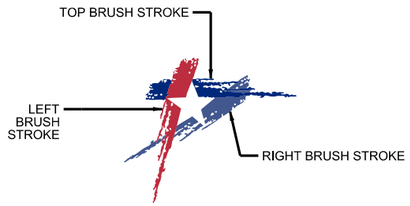

CITY OF ROUND ROCK LOGO

WYOMING SPRINGS
SEGMENT 1
ROUND ROCK, TX

AGUIRRE & FIELDS
ENGINEERING INNOVATORS
TBPE FIRM REGISTRATION # 739

Revision No.	Date	Description

STATE OF TEXAS
RYAN J. WILLIAMS
110418
LICENSED
PROFESSIONAL ENGINEER
4/17/2023

100% SUBMITTAL

Project No.:	36179
Issued:	4/17/2023
Drawn By:	QBH
Checked By:	RJW
Scale:	

Sheet Title
NB WYOMING SPRINGS AT DRY FORK CREEK AESTHETIC DETAILS

297
Sheet Number

AUSTIN OFFICE
TEXAS
4/17/2023 12:46:45 PM
USER: ryanwilliams
Plotted By: RYAN WILLIAMS
CITY OF ROUND ROCK
\\AFI-FS\proj\36179\CAD\Sheets\Aesthetic Details.dgn

DRILLING LOG

WinCore Version 3.0

County: Highway: CSJ
Hole: B-1
Structure:
Station: 154+40
Offset:
District:
Date: 02/29/20
Grnd. Elev.: 763.00 ft
GW Elev.: N/A

Elev. (ft)	LOG	Texas Cone Penetrometer	Strata Description	Triaxial Test: Lateral Press. (psi)	Triaxial Test: Deviator Stress (psi)	Properties: MC	LL	PI	Wet Den. (pcf)	Additional Remarks
			CLAY, Fat, Brown (CH)			18	62	34		
761.0			LIMESTONE, Very Hard, Tan			32				
4		50 (0.5) 50 (0.5)				24				
6						20				
8						21				
10		50 (0.5) 50 (0)								
12										
14		50 (1) 50 (0.5)				25				
18										
18										
20		50 (0) 50 (0)								
22										
24		50 (0.5) 50 (0.5)				21				
26										
28										
30		50 (0) 50 (0)								

Remarks:
Lat, Long: 30.530357, -97.723705

The ground water elevation was not determined during the course of this boring

Driller: **Logger:** **Organization: Raba-Kistner Consultants, Inc.**

FIGURE: 2a

DRILLING LOG

WinCore Version 3.0

County: Highway: CSJ
Hole: B-1
Structure:
Station: 154+40
Offset:
District:
Date: 02/29/20
Grnd. Elev.: 763.00 ft
GW Elev.: N/A

Elev. (ft)	LOG	Texas Cone Penetrometer	Strata Description	Triaxial Test: Lateral Press. (psi)	Triaxial Test: Deviator Stress (psi)	Properties: MC	LL	PI	Wet Den. (pcf)	Additional Remarks
732.0			LIMESTONE, Very Hard, Tan							
32			LIMESTONE, Very Hard, Gray							
34		50 (0) 50 (0)				22				
36										
38										
40		50 (0) 50 (0.5)								
42										
44		50 (0) 50 (0)				19				
46										
48										
50		50 (0.5) 50 (0)								
52										
54		50 (0.5) 50 (0)								
56										
58										
60		50 (0.5) 50 (0.5)								

Remarks:
Lat, Long: 30.530357, -97.723705

The ground water elevation was not determined during the course of this boring.

Driller: **Logger:** **Organization: Raba-Kistner Consultants, Inc.**

FIGURE: 2b

STATE OF TEXAS
RICHARD T. SHIMONO
135020
LICENSED
PROFESSIONAL ENGINEER

4/05/2023

WYOMING SPRINGS
SEGMENT 1
ROUND ROCK, TX

ROUND ROCK, TEXAS

RABA KISTNER
TBPE Firm Registration No. F-3257

Revision No.	Date	Description

100% SUBMITTAL

Project No.:	36179
Issued:	3/15/2023
Drawn By:	QBH
Checked By:	RJW
Scale:	

Sheet Title
NB WYOMING SPRINGS AT DRY FORK CREEK
BORING LOGS
SHEET 01 OF 03

298
Sheet Number

DRILLING LOG

3 of 3

WinCore Version 3.0	County	Hole	B-1	District	
	Highway	Structure		Date	02/29/20
	CSJ	Station	154+40	Grnd. Elev.	763.00 ft
		Offset		GW Elev.	N/A

Elev. (ft)	LOG	Texas Cone Penetrometer	Strata Description	Triaxial Test: Lateral Press. (psi)	Triaxial Test: Deviator Stress (psi)	Properties: MC	LL	PI	Wet Den. (pcf)	Additional Remarks
			LIMESTONE, Very Hard, Gray							
62										
64		50 (0) 50 (0)								
66										
68										
693.0 70		50 (0) 50 (0)								
72										
74										
76										
78										
80										
82										
84										
86										
86										
90										

Remarks:
Lat, Long: 30.530357, -97.723705

The ground water elevation was not determined during the course of this boring.

Driller: **Logger:** **Organization: Raba-Kistner Consultants, Inc.**

FIGURE: 2c

DRILLING LOG

1 of 2

WinCore Version 3.0	County	Hole	B-2	District	
	Highway	Structure		Date	02/26/20
	CSJ	Station	152+50	Grnd. Elev.	754.00 ft
		Offset		GW Elev.	745.00 ft

Elev. (ft)	LOG	Texas Cone Penetrometer	Strata Description	Triaxial Test: Lateral Press. (psi)	Triaxial Test: Deviator Stress (psi)	Properties: MC	LL	PI	Wet Den. (pcf)	Additional Remarks
			CLAY, Fat, Brown (CH)			16				
2						16				
4		50 (0.5) 50 (0.5)				19				
748.0 6			LIMESTONE, Very Hard, Tan			24				
6						27				
10		50 (1.5) 50 (1)								
12										
14		50 (1) 50 (0.5)				17				
738.0 16			LIMESTONE, Very Hard, Gray							
16										
20		50 (0.5) 50 (0.5)								
22										
24		50 (1) 50 (1)				19				
26										
28										
30		50 (1) 50 (0.5)								

Remarks:
Lat, Long: 30.529762, -97.723629

Any ground water elevation informetion provided on this boring log is representative of conditions existing on the day and for the specific location where this information was collected. The actual groundwater elevation may fluctuate due to time, climatic conditions, and/or construction activity.

Driller: **Logger:** **Organization: Raba-Kistner Consultants, Inc.**

FIGURE: 3a

STATE OF TEXAS
RICHARD T. SHIMONO
135020
LICENSED
PROFESSIONAL ENGINEER

4/05/2023

WYOMING SPRINGS
SEGMENT 1
ROUND ROCK, TX

ROUND ROCK, TEXAS

RABA KISTNER
TBPE Firm Registration No. F-3257

Revision No.	Date	Description

100% SUBMITTAL

Project No.:	36179
Issued:	3/15/2023
Drawn By:	QBH
Checked By:	RJW
Scale:	

Sheet Title
NB WYOMING SPRINGS AT DRY FORK CREEK
BORING LOGS
SHEET 02 OF 03

299
Sheet Number

DRILLING LOG

WinCore Version 3.0	County	Hole	B-2	District	
	Highway	Structure		Date	02/26/20
	CSJ	Station	152+50	Grnd. Elev.	754.00 ft
		Offset		GW Elev.	745.00 ft

Elev. (ft)	LOG	Texas Cone Penetrometer	Strata Description	Triaxial Test: Lateral Press. (psi)	Triaxial Test: Deviator Stress (psi)	Properties: MC	Properties: LL	Properties: PI	Properties: Wet Den. (pcf)	Additional Remarks
			LIMESTONE, Very Hard, Gray							
32										
34		50 (1) 50 (0.5)				22				
36										
36										
40		50 (0) 50 (0)								
42										
44		50 (0.5) 50 (0)				19				
48										
48										
704.0 50		50 (0.5) 50 (0)								
52										
54										
56										
58										
60										

Remarks:
Lat, Long: 30.529762, -97.723629

Any ground water elevation information provided on this boring log is representative of conditions existing on the day and for the specific location where this information was collected. The actual groundwater elevation may fluctuate due to time, climatic conditions, and/or construction activity.

Driller: **Logger:** **Organization: Raba-Kistner Consultants, Inc.**

FIGURE: 3b

STATE OF TEXAS
RICHARD T. SHIMONO
135020
LICENSED
PROFESSIONAL ENGINEER

4/05/2023

WYOMING SPRINGS
SEGMENT 1
ROUND ROCK, TX

ROUND ROCK, TEXAS

RABA KISTNER
TBPE Firm Registration No. F-3257

Revision No.	Date	Description

100% SUBMITTAL

Project No.:	36179
Issued:	3/15/2023
Drawn By:	QBH
Checked By:	RJW
Scale:	
Sheet Title	NB WYOMING SPRINGS AT DRY FORK CREEK BORING LOGS SHEET 03 OF 03
Sheet Number	300

STRUCTURE	DESIGNED GIRDERS									DEPRESSED STRAND PATTERN		CONCRETE		OPTIONAL DESIGN				
	SPAN NO.	GIRDER NO.	GIRDER TYPE	PRESTRESSING STRANDS						NO.	TO END (in)	RELEASE STRGTH (1) f'ci (ksi)	MINIMUM 28 DAY COMP STRGTH f'c (ksi)	DESIGN LOAD COMP STRESS (TOP ℄) (SERVICE I) fct(ksi)	DESIGN LOAD TENSILE STRESS (BOTT ℄) (SERVICE III) fcb(ksi)	REQUIRED MINIMUM ULTIMATE MOMENT CAPACITY (STRENGTH I) (kip-ft)	LIVE LOAD DISTRIBUTION FACTOR (2)	
				NON-STD STRAND PATTERN	TOTAL NO.	SIZE (in)	STRGTH fpu (ksi)	"e" ℄ (in)	"e" END (in)								Moment	Shear
NB WYOMING SPRINGS AT DRY FORK CREEK BRIDGE	1 & 3	ALL	Tx40		26	0.6	270	14.68	9.76	4	36.5	4.400	6.000	2.919	-3.396	4320	0.692	0.967
	2	1 - 4																
	2	5	Tx40		30	0.6	270	14.40	9.60	6	30.5	5.000	6.300	2.994	-3.742	5138	0.911	1.125

NON-STANDARD STRAND PATTERNS

PATTERN	STRAND ARRANGEMENT AT ℄ OF GIRDER

(1) Based on the following allowable stresses (ksi):

Compression = 0.65 f'ci

Tension = $0.24\sqrt{f'ci}$

Optional designs must likewise conform.

(2) Portion of full HL93.

DESIGN NOTES:

Designed according to AASHTO LRFD Bridge Design Specifications.

Optional designs for girders 120 feet or longer must have a calculated residual camber equal to or greater than that of the designed girder.

Prestress losses for the designed girders have been calculated for a relative humidity of 60 percent. Optional designs must likewise conform.

FABRICATION NOTES:

Provide Class H concrete.

Provide Grade 60 reinforcing steel bars.

Use low relaxation strands, each pretensioned to 75 percent of fpu.

Strand debonding must comply with Item 424.4.2.2.2.4. Full-length debonded strands are only permitted in positions marked Δ. Double wrap full-length debonded strands in outer most position of each row.

When shown on this sheet, the Fabricator has the option of furnishing either the designed girder or an approved optional design. All optional design submittals must be signed, sealed and dated by a Professional Engineer registered in the State of Texas.

Seal cracks in girder ends exceeding 0.005" in width as directed by the Engineer. The fabricator is permitted to decrease the spacing of Bars R and S by providing additional bars to help limit crack width provided the decreased spacing results in no less than 1" clear between bars. The fabricator must take an approved corrective action if cracks greater than 0.005" form on a repetitive basis.

DEPRESSED STRAND DESIGNS:

Locate strands for the designed girder as low as possible on the 2" grid system unless a non-standard strand pattern is indicated. Fill row "2.5", then row "4.5", then row "6.5", etc., beginning each row in the "A" position and working outward until the required number of strands is reached. All strands in the "A" position must be depressed, maintaining the 2" spacing so that, at the girder ends, the upper two strands are in the position shown in the table.

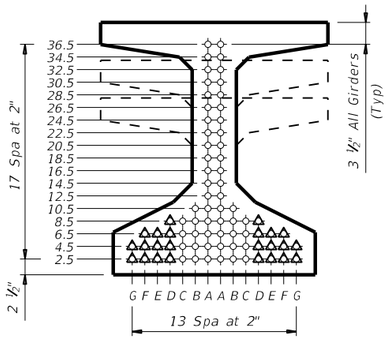

TYPE Tx28, Tx34 & Tx40

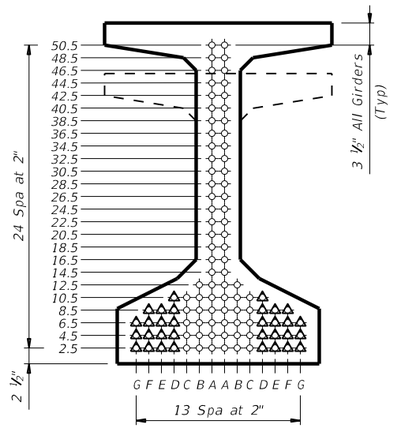

TYPE Tx46 & Tx54

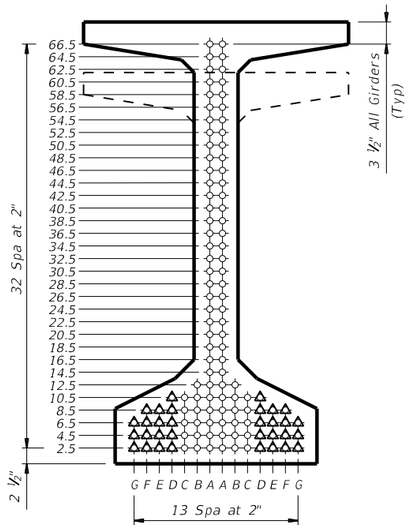

TYPE Tx62 & Tx70

HL93 LOADING

AGUIRRE & FIELDS, LP
TBPELS FIRM REGISTRATION #739

STATE OF TEXAS
RYAN J. WILLIAMS
110418
LICENSED
PROFESSIONAL ENGINEER
4/17/2023

Texas Department of Transportation

Bridge Division Standard

PRESTRESSED CONCRETE I-GIRDER DESIGNS (NON-STANDARD SPANS)

IGND

FILE: IGND_DFNB.dgn	DN: TxDOT	CK: TxDOT	DW: EFC	CK: TAR
©TxDOT August 2017	CONT	SECT	JOB	HIGHWAY
REVISIONS 10-19: Modified for depressed strands only.				WYM SPR
	DIST	COUNTY		SHEET NO.
		WILLIAMSON		301

DISCLAIMER:
The use of this standard is governed by the "Texas Engineering Practice Act". No warranty of any kind is made by TxDOT for any purpose whatsoever. TxDOT assumes no responsibility for the conversion of this standard to other formats or for incorrect results or damages resulting from its use.

DATE: 3/30/2023 6:45:10 PM
FILE: c:\pw-of\pw-of-prod\quan.haaguirre-fields.com\d0226434\IGND_DFNB.dgn

ALL ABUTMENTS AND BENTS ARE ON BEARING N 56° 17' 29" W.

TEST HOLE B-2
STA 152+65.65
62.25' LT

TEST HOLE B-1
STA 154+68.11
82.79' LT

EXIST 30" WATER

MSE WALL 10

SEJ-M (4")

EXIST OH ELEC (TO BE RELOCATED)

℄ GIRDER 1 (TYP)

PROP ROW

EXIST ROW

MSE WALL 11

EXIST WW MANHOLE (TO BE RAISED TO FINAL GRADE)

46° 09'41"

41° 34'40"

NOM FACE OF C411 RAIL

℄ SUP-EDGE

SEJ-M (4")

20'-0" BAS-A (MOD)

CSAB (OPTION 2)

EXIST 24" WASTEWATER

PROP 24" STORM SEWER

MIN CLR 2.42'

151+00

3.54' MIN TO ℄

41'-6" OVERALL

27'-0" ROADWAY

12'-0" SUP

6" CURB

1'-0"

13'-6" LANE

13'-6" LANE

2.00%

36° 59'39"

PROP ILLUMINATION (TYP)

MSE WALL 12

ILLUMINATION POLE BRACKET PER BL STANDARD STA 152+81.00

153+00

NOM FACE OF C411 RAIL

ILLUMINATION POLE BRACKET PER BL STANDARD STA 153+65.00

32° 24'38"

154+00

CSAB (OPTION 2)

MIN CLR 4.25'

℄ GIRDER 5 (TYP)

PROP 18" STORM SEWER

155+00

℄ BENT 2
STA 152+69.14

℄ BENT 3
STA 153+49.14

3.69' MIN TO ℄

8'-2"

3:1 MAX

MSE WALL 9

END BRIDGE

FACE OF BACKWALL ℄ ABUTMENT 4 STA 154+29.14 EL = 776.30

151+00

CL_WYM10

℄ WYM & PGL

BEGIN BRIDGE

FACE OF BACKWALL ℄ ABUTMENT 1 STA 151+89.14 EL = 767.88

PROP ITS

ORDINARY HIGH WATER LIMITS

PROP 4' STORM SEWER MANHOLE

MBGF

EXIST 24" WASTEWATER

PROP NB WYOMING SPRINGS AT DRY FORK CREEK BRIDGE

EXIST ROW

℄ SDWK-EDGE-2

DRY FORK CREEK

PROP ROW

EXIST ROW

HORIZONTAL CURVE (CL_WYM10)

PI STATION	= 153+85.11
DELTA	= 36° 39' 21.26" (RT)
DEGREE OF CURVE	= 05° 43' 46.48"
TANGENT	= 331.26
LENGTH	= 639.77
RADIUS	= 1,000.00
PC STATION	= 150+53.85
PT STATION	= 156+93.61

DESIGN SPEED: 45 MPH
FUNCTIONAL CLASS: ARTERIAL
2022 ADT: 3,800
2042 ADT: 7,550
NBI NO: 14-246-E020-21-006

PLAN

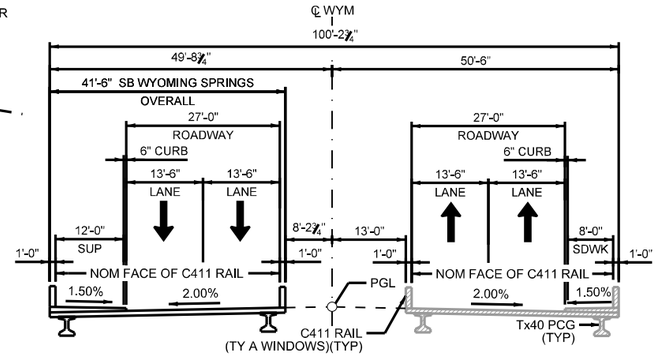

TYPICAL SECTION

0 20 40 60 80

SCALE: 1"=40'

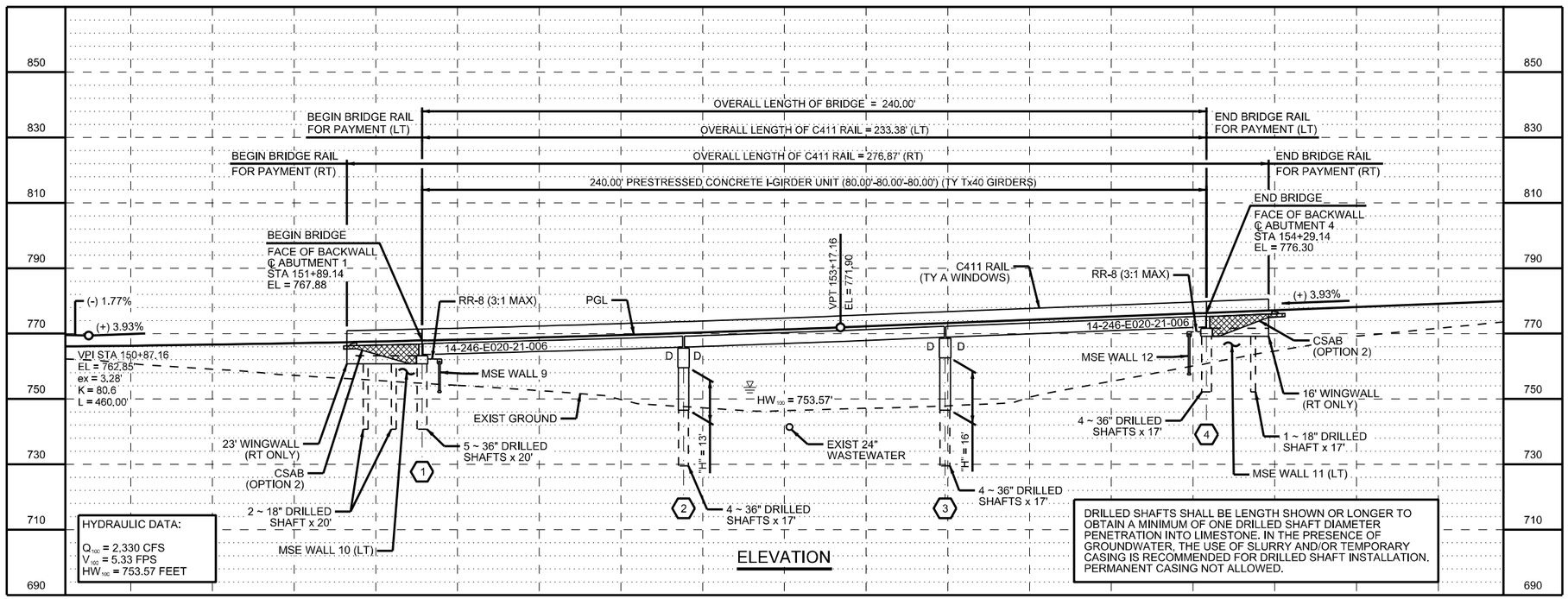

HYDRAULIC DATA:

Q_{100} = 2.330 CFS
V_{100} = 5.33 FPS
HW_{100} = 753.57 FEET

DRILLED SHAFTS SHALL BE LENGTH SHOWN OR LONGER TO OBTAIN A MINIMUM OF ONE DRILLED SHAFT DIAMETER PENETRATION INTO LIMESTONE. IN THE PRESENCE OF GROUNDWATER, THE USE OF SLURRY AND/OR TEMPORARY CASING IS RECOMMENDED FOR DRILLED SHAFT INSTALLATION. PERMANENT CASING NOT ALLOWED.

ELEVATION

HL93 LOADING

GENERAL NOTES:

1. DESIGNED IN ACCORDANCE WITH AASHTO LRFD BRIDGE DESIGN SPECIFICATIONS, 9TH EDITION (2020).
2. ALL DIMENSIONS ARE EITHER HORIZONTAL OR VERTICAL AND MUST BE CORRECTED FOR GRADE AND CROWN.
3. "H" VALUES SHOWN ARE ESTIMATED COLUMN HEIGHTS. CONTRACTOR IS RESPONSIBLE FOR CALCULATING ACTUAL COLUMN HEIGHTS BASED ON FIELD CONDITIONS.
4. CONTRACTOR SHALL VERIFY LOCATIONS OF EXISTING UTILITIES PRIOR TO CONSTRUCTION.
5. "D" DENOTES BENTS WITH DOWELED END CONDITION. SEE BENT SHEETS FOR LOCATIONS OF DOWELS D.
6. SEE "BORING LOGS" SHEETS FOR BORING LOG INFORMATION.
7. SEE "AESTHETIC DETAILS" SHEETS FOR AESTHETIC INFORMATION.
8. SEE "ILLUMINATION PLAN" AND "PCGU" SHEETS FOR ILLUMINATION AND FUTURE ITS INFORMATION.

(1) CONDUIT FOR ILLUMINATION POLE BRACKET SHALL BE PLACED PRIOR TO REINFORCED CONCRETE SLAB POUR.

WYOMING SPRINGS
SEGMENT 1
ROUND ROCK, TX

ROUND ROCK, TEXAS

AGUIRRE & FIELDS
ENGINEERING INNOVATORS
TBPE FIRM REGISTRATION # 739

Revision No.	Date	Description

STATE OF TEXAS
RYAN J. WILLIAMS
110418
LICENSED
PROFESSIONAL ENGINEER
4/20/2023

100% SUBMITTAL

Project No.:	36179
Issued:	4/20/2023
Drawn By:	QBH
Checked By:	RJW
Scale:	

Sheet Title
SB WYOMING SPRINGS AT DRY FORK CREEK BRIDGE LAYOUT

302
Sheet Number

SUMMARY OF BRIDGE QUANTITIES

ITEM	400	416	416	420	420	420	422	422	422	425	427	432	442	450	454
BID CODE	6005	6001	6004	6013	6029	6037	6001	6013	6015	6037	6002	6002	6007	6036	6018
DESCRIPTION (NBI #: 14-246-E020-21-006)	CEM STABIL BKFL	DRILL SHAFT (18 IN)	DRILL SHAFT (36 IN)	CL C CONC (ABUT) (1)	CL C CONC (CAP) (1)	CL C CONC (COLUMN)	REINF CONC SLAB	BRIDGE SIDEWALK	APPROACH SLAB	PRESTR CONC GIRDER (TX40)	CONCRETE PAINT FINISH	RIPRAP (CONC) (5 IN)	STR STEEL (MISC NON - BRIDGE) (2)	RAIL (TY C411)	SEALED EXPANSION JOINT (4 IN) (SEJ-M)
UNIT	CY	LF	LF	CY	CY	CY	SF	SF	CY	LF	SF	CY	LB	LF	LF
ABUTMENTS 1 & 4	228.0	57	168	61.3				951	115.1			14		39	
BENTS 2-3			136		78.8	45.5					3,000				
1 ~ 240.00' PRESTRESSED CONCRETE I-GIRDER UNIT							9,776	3,154		1,170.35	10,050		425.6	471.3	72
TOTAL	228.0	57	304	61.3	78.8	45.5	9,776	4,105	115.1	1,170.35	13,050	14	425.6	510.3	72

(1) QUANTITY INCLUDES SHEAR KEYS

(2) QUANTITY FOR BRIDGE SIDEWALK EXPANSION JOINT COVER PLATE

BEARING SEAT ELEVATIONS

	BEAM 1	BEAM 2	BEAM 3	BEAM 4	BEAM 5
BENT 1 (FWD)	763.545	763.488	763.434	763.383	763.336
	BEAM 1	BEAM 2	BEAM 3	BEAM 4	BEAM 5
BENT 2 (BK)	765.974	765.885	765.798	765.711	765.625
(FWD)	766.089	765.999	765.910	765.822	765.735
	BEAM 1	BEAM 2	BEAM 3	BEAM 4	BEAM 5
BENT 3 (BK)	768.932	768.872	768.807	768.737	768.662
(FWD)	769.049	768.990	768.925	768.856	768.781
	BEAM 1	BEAM 2	BEAM 3	BEAM 4	BEAM 5
BENT 4 (BK)	771.913	771.889	771.861	771.829	771.792

HL93 LOADING

WYOMING SPRINGS
SEGMENT 1
ROUND ROCK, TX

ROUND ROCK, TEXAS

AGUIRRE & FIELDS
ENGINEERING INNOVATORS
TBPE FIRM REGISTRATION # 739

Revision No.	Date	Description

STATE OF TEXAS
RYAN J. WILLIAMS
110418
LICENSED
PROFESSIONAL ENGINEER
4/17/2023

100% SUBMITTAL

Project No.:	36179
Issued:	4/17/2023
Drawn By:	QBH
Checked By:	RJW
Scale:	

Sheet Title
SB WYOMING SPRINGS AT DRY FORK CREEK ESTIMATED QUANTITIES & BRG SEAT ELEVATIONS

303
Sheet Number

4/17/2023 12:26:08 PM USER: default CITY OF ROUND ROCK Dallas
\\815-Dpw-04\Projects\36179\Drawings\Bridge\SB WYOMING SPRINGS AT DRY FORK CREEK ESTIMATED QUANTITIES & BRG SEAT ELEVATIONS.dwg
AUSTIN OFFICE 8911 N. CAPITAL OF TEXAS HWY. AUSTIN, TEXAS

MATERIAL NOTES:
1. PROVIDE CLASS C CONCRETE STRENGTH (f'_c = 3600 PSI).
2. PROVIDE GRADE 60 REINFORCING STEEL.

GENERAL NOTES:
1. DESIGNED IN ACCORDANCE WITH AASHTO LRFD BRIDGE DESIGN SPECIFICATIONS, 9TH EDITION (2020).
2. SEE BRIDGE LAYOUT FOR FOUNDATION TYPE, SIZE, AND LENGTH.
3. SEE COMMON FOUNDATION DETAILS STANDARD, FD(MOD), FOR ALL FOUNDATION DETAILS AND NOTES.
4. SEE CONCRETE RIPRAP (CRR) STANDARD FOR RIPRAP ATTACHMENT DETAILS.
5. SEE TYPE C411 RAIL STANDARD FOR RAIL ANCHORAGE IN WINGWALLS.
6. SEE SHEAR KEY DETAILS STANDARD, IGSK, FOR ALL SHEAR KEY DETAILS AND NOTES.
7. COVER DIMENSIONS ARE CLEAR DIMENSIONS, UNLESS NOTED OTHERWISE.
8. REINFORCING BAR DIMENSIONS ARE OUT-TO-OUT OF BAR.
9. CALCULATED FOUNDATION LOADS:
   ABUTMENT 1: 105 TONS/DR SH.
   ABUTMENT 4: 120 TONS/DR SH.

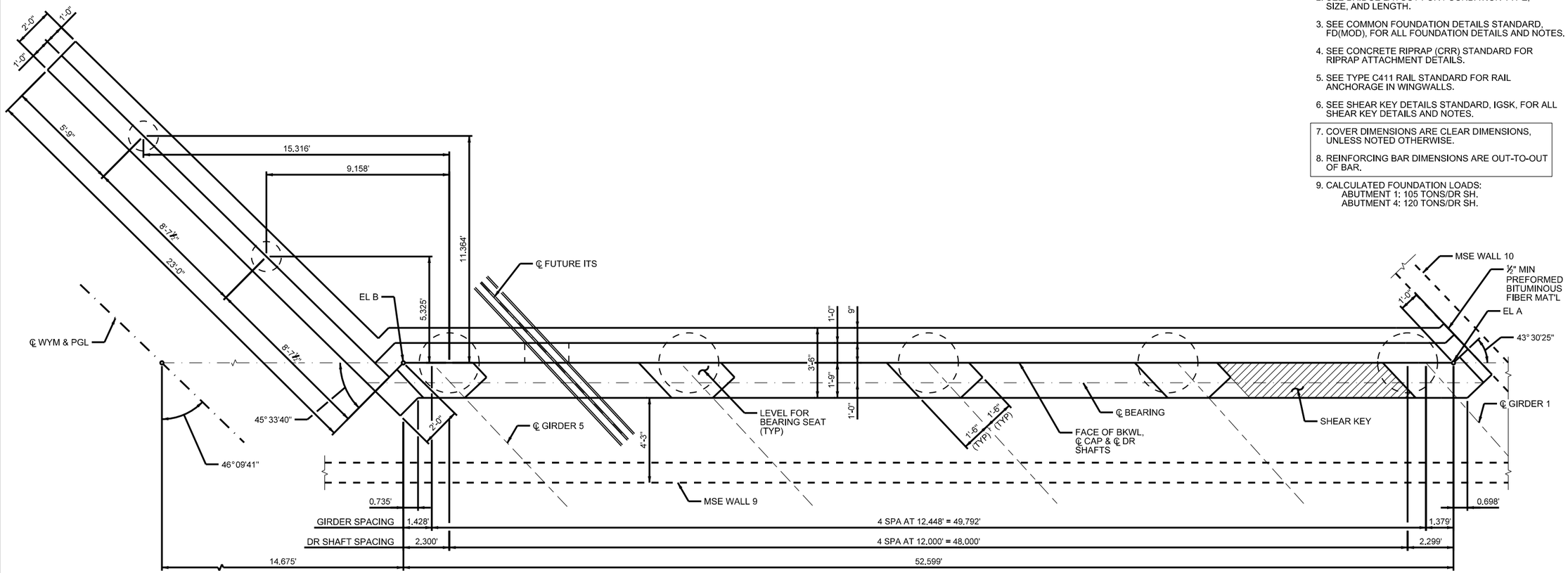

PLAN

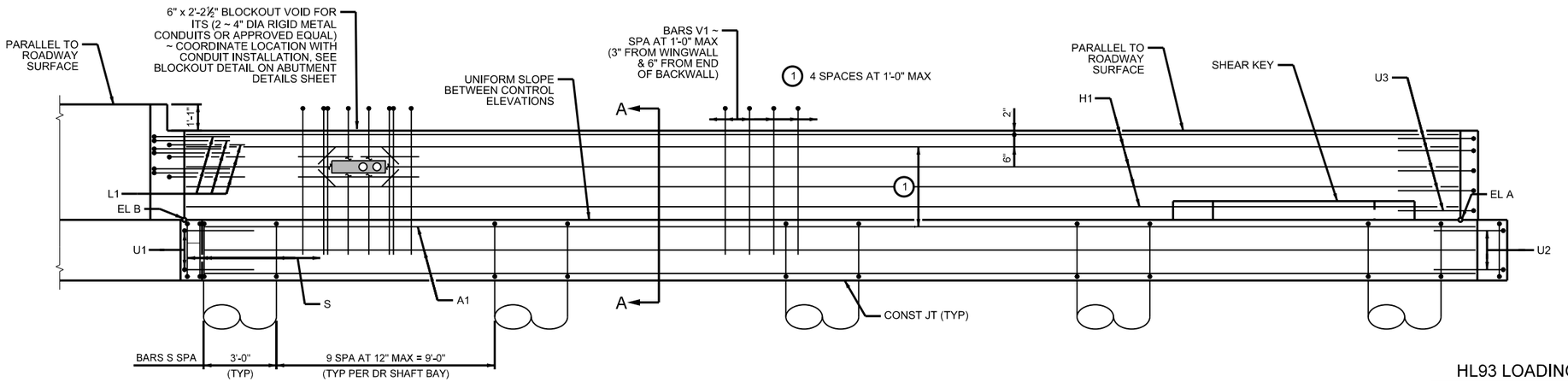

ELEVATION

HL93 LOADING

CONTROL ELEVATIONS

ABUT	EL A	EL B
1	763.42	763.19

WYOMING SPRINGS
SEGMENT 1
ROUND ROCK, TX

ROUND ROCK, TEXAS

AGUIRRE & FIELDS
ENGINEERING INNOVATORS
TBPE FIRM REGISTRATION # 739

Revision No.	Date	Description

STATE OF TEXAS
RYAN J. WILLIAMS
110418
LICENSED
PROFESSIONAL ENGINEER
4/17/2023

100% SUBMITTAL

Project No.:	36179
Issued:	3/30/2023
Drawn By:	QBH
Checked By:	RJW
Scale:	

Sheet Title
SB WYOMING SPRINGS AT DRY FORK CREEK ABUTMENT 1

304
Sheet Number

GENERAL NOTES:
1. SEE ABUTMENT 1 SHEET FOR GENERAL NOTES.

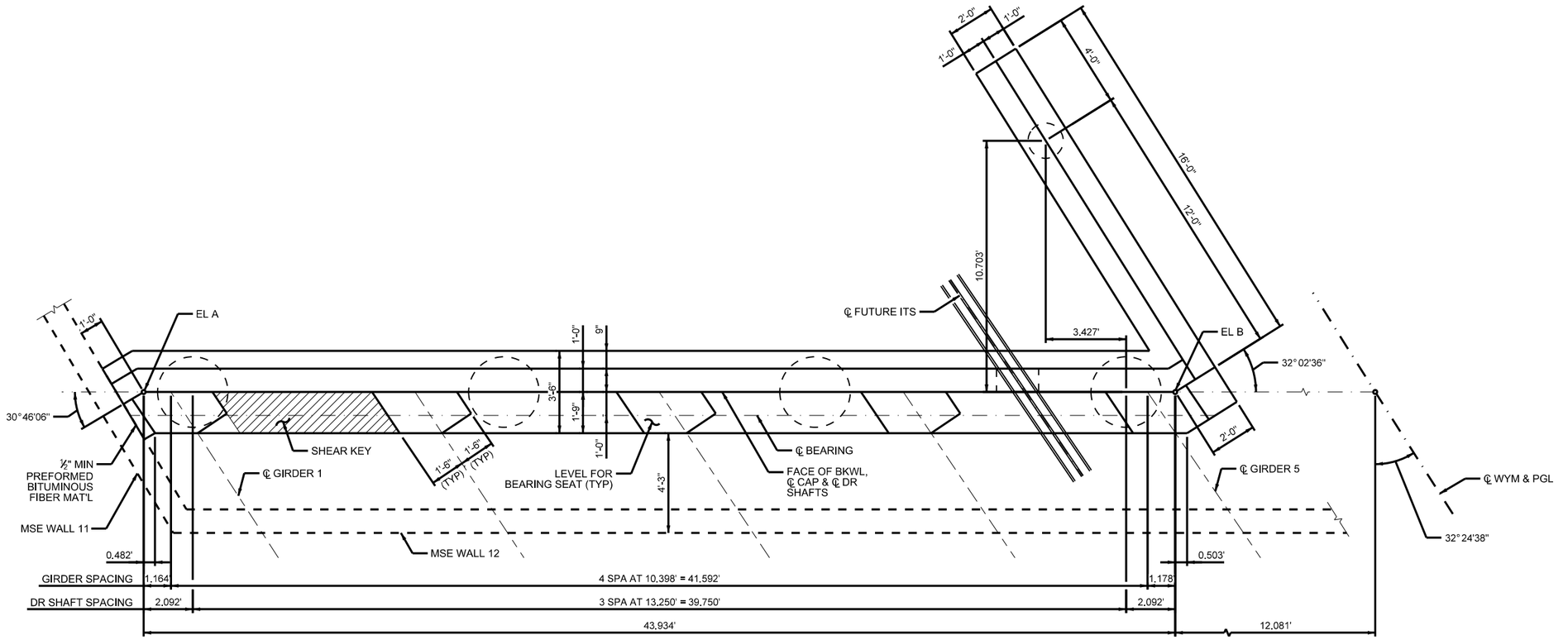

PLAN

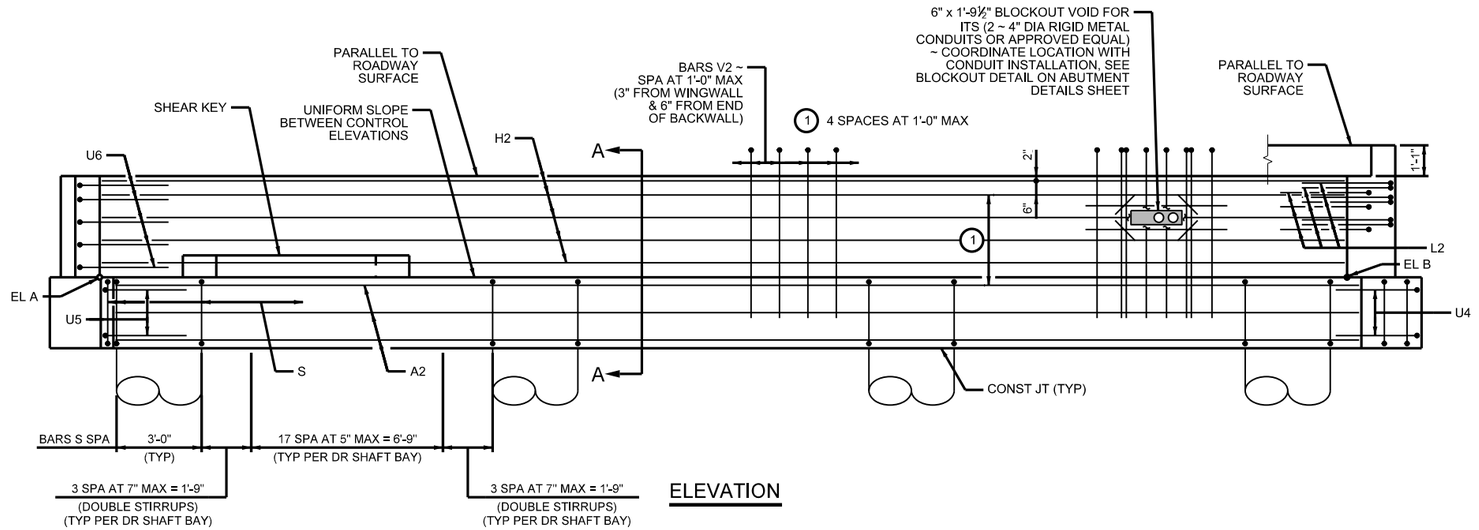

ELEVATION

HL93 LOADING

CONTROL ELEVATIONS

ABUT	EL A	EL B
4	771.79	771.67

WYOMING SPRINGS
SEGMENT 1
ROUND ROCK, TX

ROUND ROCK, TEXAS

AGUIRRE & FIELDS
ENGINEERING INNOVATORS
TBPE FIRM REGISTRATION # 739

Revision No.	Date	Description

STATE OF TEXAS
RYAN J. WILLIAMS
110418
LICENSED
PROFESSIONAL ENGINEER
4/17/2023

100% SUBMITTAL

Project No.:	36179
Issued:	3/30/2023
Drawn By:	QBH
Checked By:	RJW
Scale:	

Sheet Title
SB WYOMING SPRINGS AT DRY FORK CREEK ABUTMENT 4

305
Sheet Number

AUSTIN OFFICE
NORTH DRIVE
AUSTIN, TEXAS
Date: 3/30/2023
User: QBH
File: I:\2021\Current Projects\36179 - Wyoming Springs\Design\Structures\Abutments\Abutment 4\Abutment 4 Control Elevations.dgn
CITY OF ROUND ROCK
USER: default
6:48:18 PM
3/30/2023

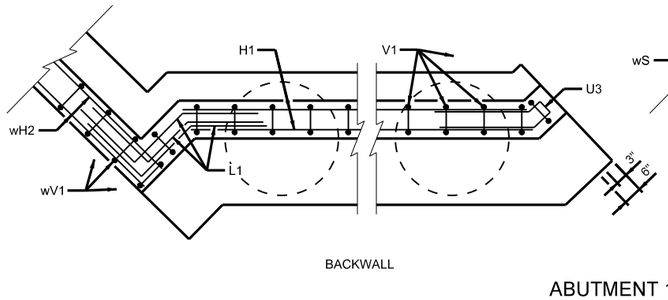

BACKWALL

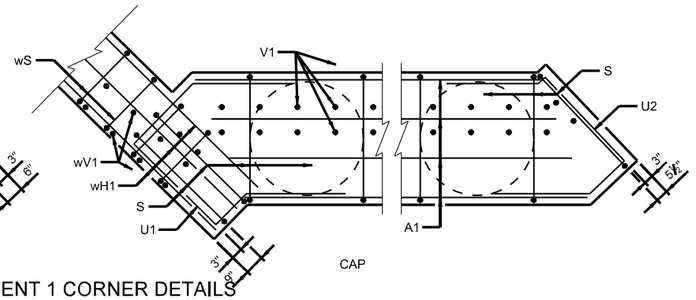

CAP

ABUTMENT 1 CORNER DETAILS

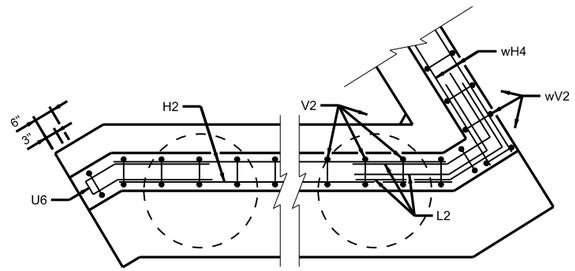

BACKWALL

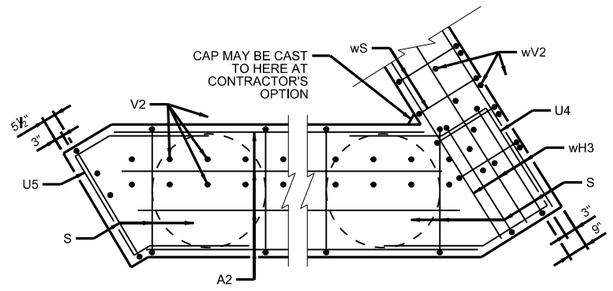

CAP

ABUTMENT 4 CORNER DETAILS

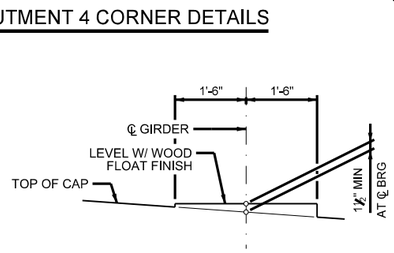

BEARING SEAT DETAIL

(BEARING SURFACE MUST BE CLEAN AND FREE OF ALL LOOSE MATERIAL BEFORE PLACING BEARING PAD.)

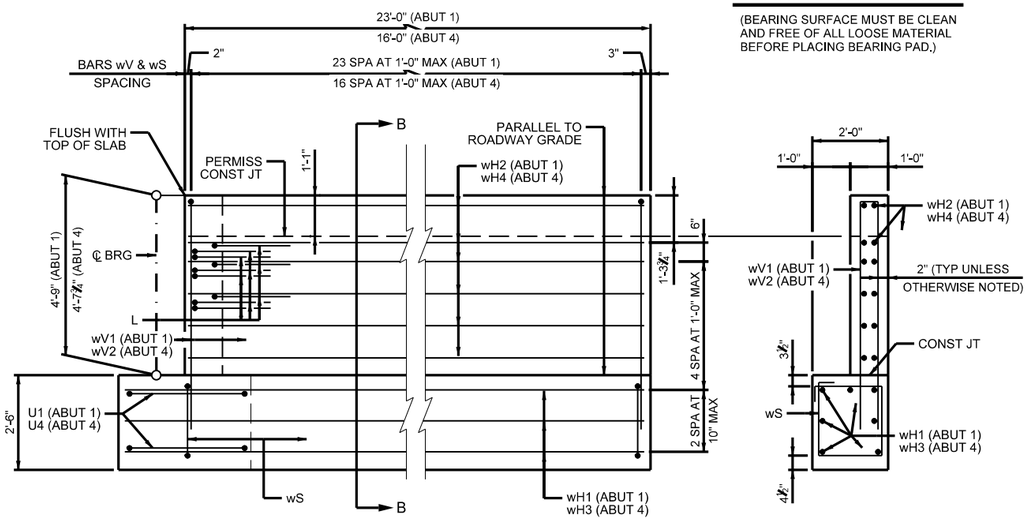

WINGWALL ELEVATION

SECTION B-B

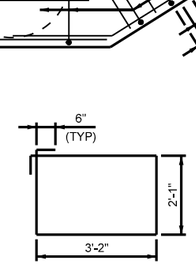

BARS S

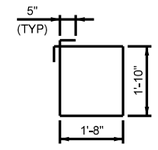

BARS wS

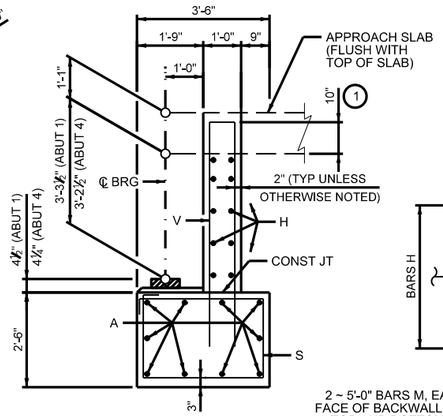

SECTION A-A

GENERAL NOTES:
1. SEE ABUTMENT 1 SHEET FOR GENERAL NOTES.

(1) INCREASE AS REQUIRED TO MAINTAIN 3" FROM FINISHED GRADE

(2) 1" TYP, ¾" MIN CLEARANCE BETWEEN DUCTS

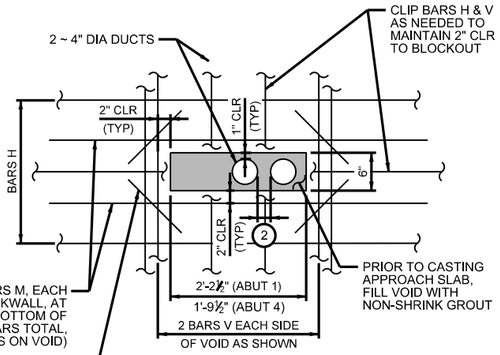

BLOCKOUT DETAIL

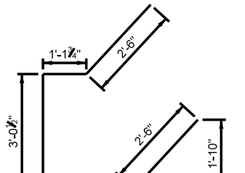

BARS U1

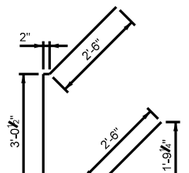

BARS U2

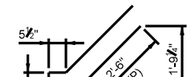

BARS U3



BARS L1

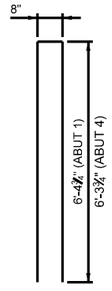

BARS V & wV

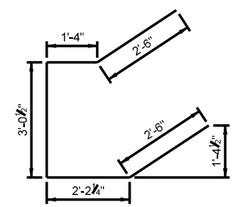

BARS U4

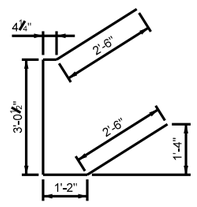

BARS U5

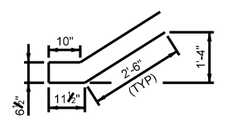

BARS U6

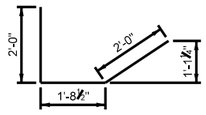

BARS L2

HL93 LOADING

WYOMING SPRINGS
SEGMENT 1
ROUND ROCK, TX

ROUND ROCK, TEXAS

AGUIRRE & FIELDS
ENGINEERING INNOVATORS
TBPE FIRM REGISTRATION # 739

Revision No.	Date	Description

STATE OF TEXAS
RYAN J. WILLIAMS
110418
LICENSED
PROFESSIONAL ENGINEER
4/17/2023

100% SUBMITTAL

Project No.:	36179
Issued:	3/30/2023
Drawn By:	QBH
Checked By:	RJW
Scale:	

Sheet Title
SB WYOMING SPRINGS AT DRY FORK CREEK ABUTMENT DETAILS

306
Sheet Number

TABLE OF ESTIMATED ABUTMENT 1 QUANTITIES

BAR	NO	SIZE	LENGTH	WEIGHT
A1	10	#11	52'-7"	2,795
H1	10	#6	52'-7"	791
L1	9	#6	5'-11"	80
M	4	#5	5'-0"	21
S	45	#5	11'-6"	540
U1	2	#6	11'-7"	35
U2	2	#6	9'-7"	29
U3	5	#6	6'-8"	51
V1	56	#5	13'-6"	787
wH1	7	#6	24'-5"	257
wH2	12	#6	22'-8"	409
wS	24	#4	7'-10"	126
wV1	24	#5	13'-6"	337
X	8	#5	1'-0"	9
REINFORCING STEEL			LB	6,267
CLASS "C" CONC			CY	34.1

TABLE OF ESTIMATED ABUTMENT 4 QUANTITIES

BAR	NO	SIZE	LENGTH	WEIGHT
A2	10	#11	43'-11"	2,335
H2	10	#6	43'-11"	660
L2	9	#6	5'-9"	78
M	4	#5	5'-0"	21
S	101	#5	11'-6"	1,212
U4	2	#6	11'-7"	35
U5	2	#6	9'-7"	29
U6	5	#6	7'-4"	56
V2	47	#5	13'-4"	652
wH3	7	#6	17'-5"	184
wH4	12	#6	15'-8"	283
wS	17	#4	7'-10"	89
wV2	17	#5	13'-4"	236
X	8	#5	1'-0"	9
REINFORCING STEEL			LB	5,879
CLASS "C" CONC			CY	27.2

NORTH OFFICE
NORTH AMERICA

1801 Capital Ave
Cheyenne, WY 82001

Date:
3/30/2023

CITY OF ROUND ROCK

USER: default

6:48:25 PM

3/30/2023

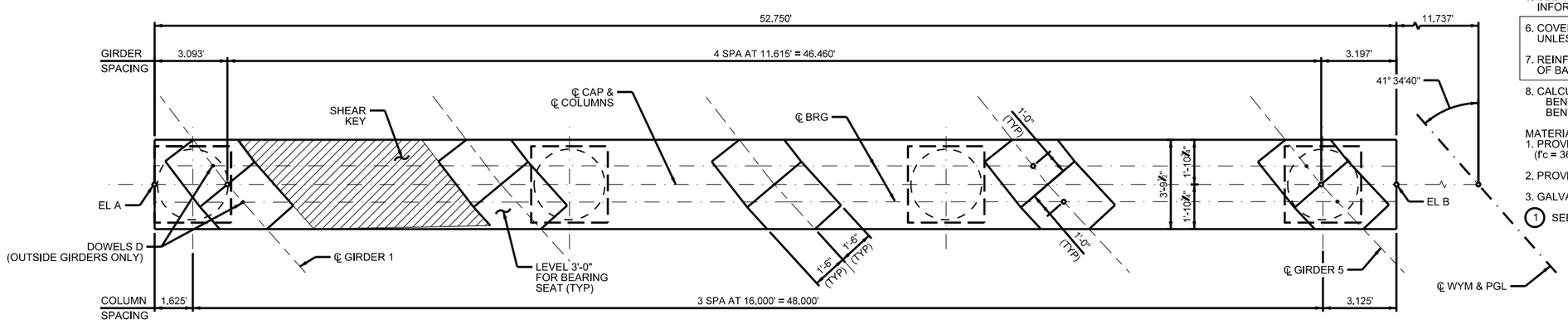

PLAN

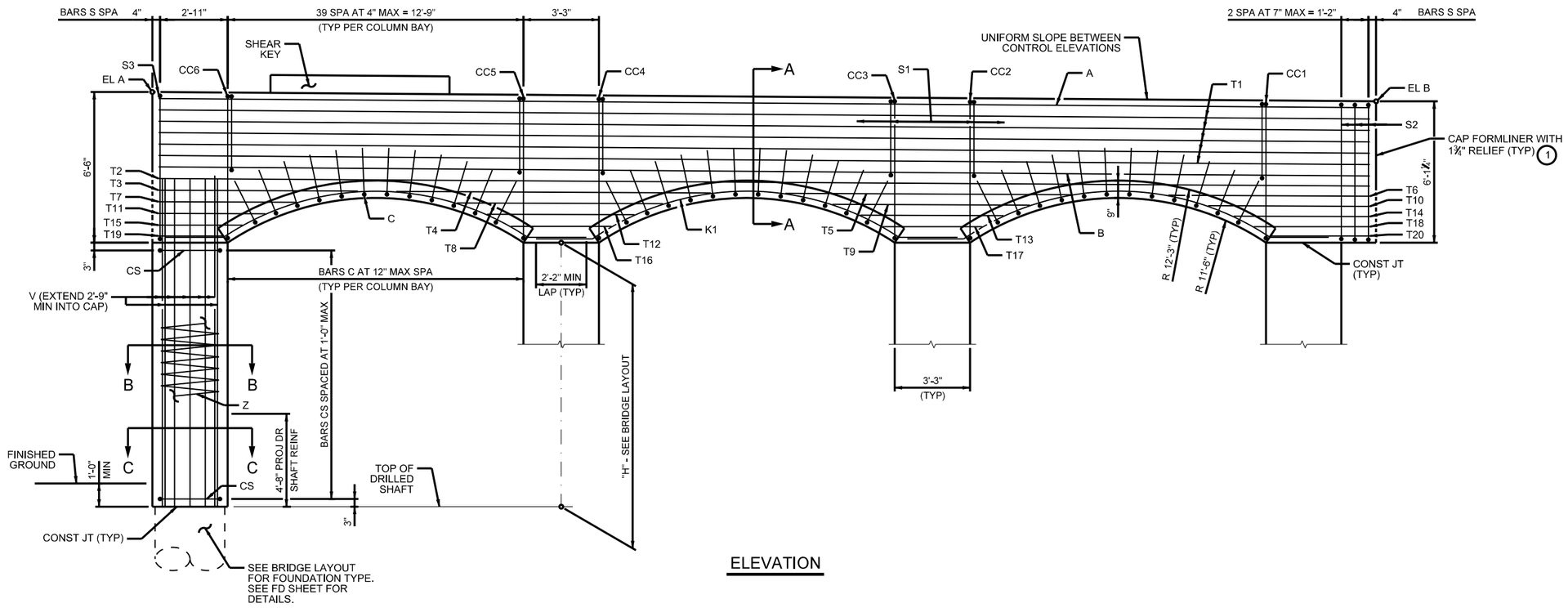

ELEVATION

GENERAL NOTES:
1. DESIGNED IN ACCORDANCE WITH AASHTO LRFD BRIDGE DESIGN SPECIFICATIONS, 9TH EDITION (2020).
2. SEE BRIDGE LAYOUT FOR FOUNDATION TYPE, SIZE, AND LENGTH.
3. SEE COMMON FOUNDATION DETAILS STANDARD, FD(MOD), FOR ALL FOUNDATION DETAILS AND NOTES.
4. SEE SHEAR KEY DETAILS STANDARD, IGSK, FOR ALL SHEAR KEY DETAILS AND NOTES.
5. SEE "AESTHETIC DETAILS" SHEETS FOR AESTHETIC INFORMATION.
6. COVER DIMENSIONS ARE CLEAR DIMENSIONS, UNLESS NOTED OTHERWISE.
7. REINFORCING BAR DIMENSIONS ARE OUT-TO-OUT OF BAR.
8. CALCULATED FOUNDATION LOADS:
   BENT 2: 175 TONS/DR SH.
   BENT 3: 175 TONS/DR SH.

MATERIAL NOTES:
1. PROVIDE CLASS C CONCRETE STRENGTH (f'c = 3600 PSI).
2. PROVIDE GRADE 60 REINFORCING STEEL.
3. GALVANIZE DOWEL BARS D.

1 SEE AESTHETIC DETAILS SHEET.

HL93 LOADING

CONTROL ELEVATIONS

BENT	EL A	EL B
2	765.88	765.48

WYOMING SPRINGS
SEGMENT 1
ROUND ROCK, TX

ROUND ROCK, TEXAS

AGUIRRE & FIELDS
ENGINEERING INNOVATORS
TBPE FIRM REGISTRATION # 739

Revision No.	Date	Description

STATE OF TEXAS
RYAN J. WILLIAMS
110418
LICENSED
PROFESSIONAL ENGINEER
4/17/2023

100% SUBMITTAL

Project No.:	36179
Issued:	3/30/2023
Drawn By:	QBH
Checked By:	RJW
Scale:	

Sheet Title
SB WYOMING SPRINGS AT DRY FORK CREEK BENT 2

307
Sheet Number

AUSTIN OFFICE
3101 Oak Landing
Round Rock, TX 78665
DWG: DW-BRIDGE
CITY OF ROUND ROCK
USER: bethull
6:48:53 PM
3/30/2023

GENERAL NOTES:
1. SEE BENT 2 SHEET FOR GENERAL NOTES.

(1) SEE AESTHETIC DETAILS SHEET.

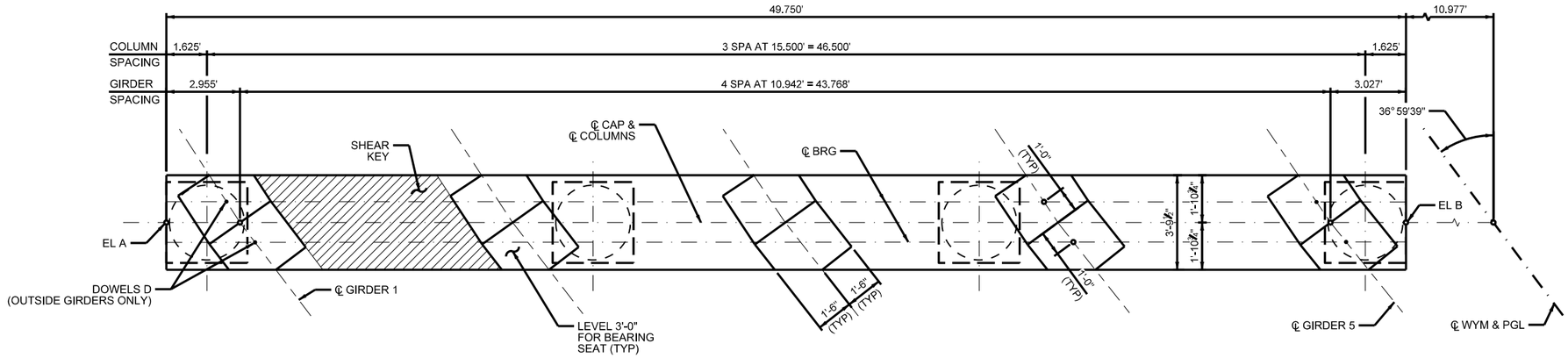

PLAN

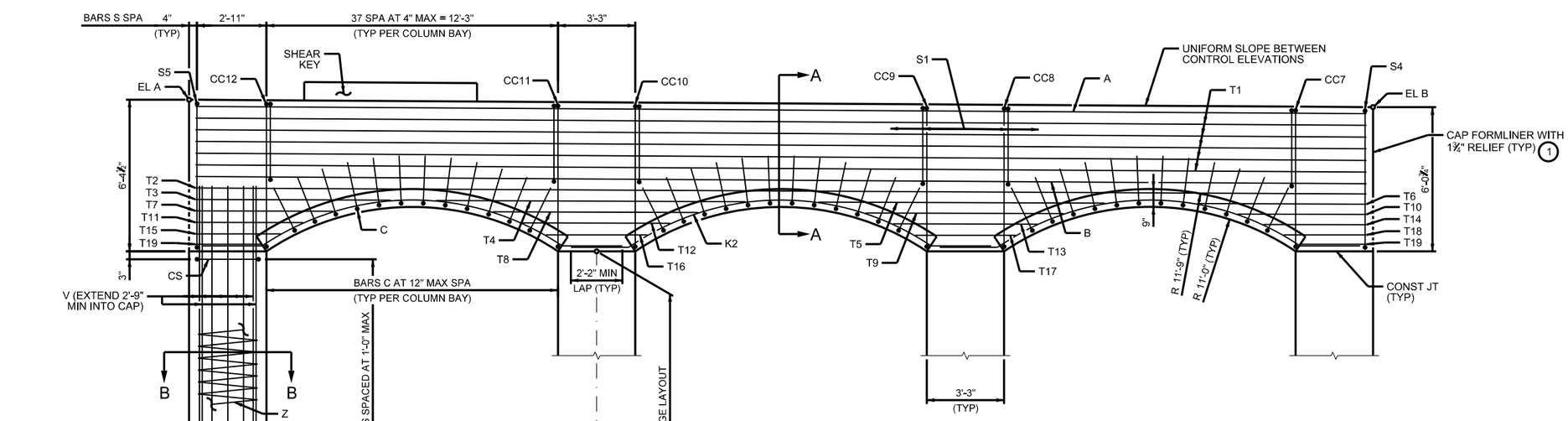

ELEVATION

HL93 LOADING

CONTROL ELEVATIONS

BENT	EL A	EL B
3	768.83	768.52

WYOMING SPRINGS
SEGMENT 1
ROUND ROCK, TX

ROUND ROCK, TEXAS

AGUIRRE & FIELDS
ENGINEERING INNOVATORS
TBPE FIRM REGISTRATION # 739

Revision No.	Date	Description

STATE OF TEXAS
RYAN J. WILLIAMS
110418
LICENSED
PROFESSIONAL ENGINEER
4/17/2023

100% SUBMITTAL

Project No.:	36179
Issued:	3/30/2023
Drawn By:	QBH
Checked By:	RJW
Scale:	

Sheet Title
SB WYOMING SPRINGS AT DRY FORK CREEK BENT 3

308
Sheet Number

AUSTIN OFFICE
512.451.8037
3/30/2023 6:47:12 PM
USER: default
CITY OF ROUND ROCK
Date: 3/30/2023
\\ar1-2\proj\36179\Engineering\Bridge\SB WYOMING SPRINGS AT DRY FORK CREEK BENT 3.dwg

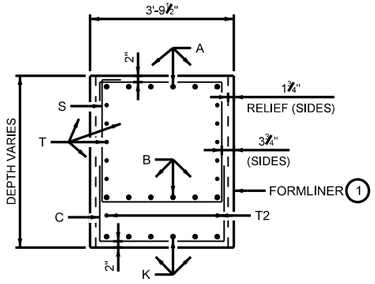

SECTION A-A

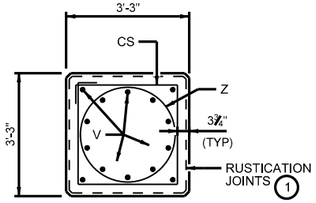

SECTION B-B

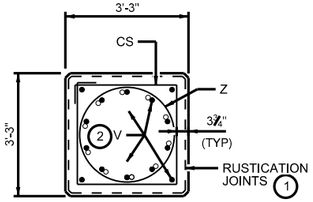

SECTION C-C

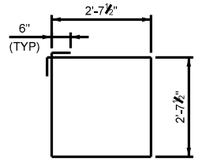

BARS CS

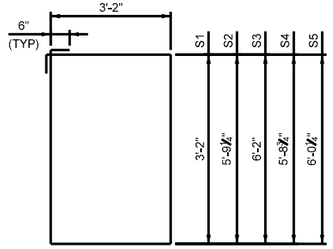

BARS S

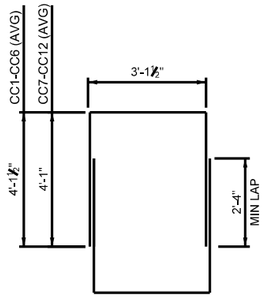

BARS CC

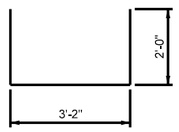

BARS C

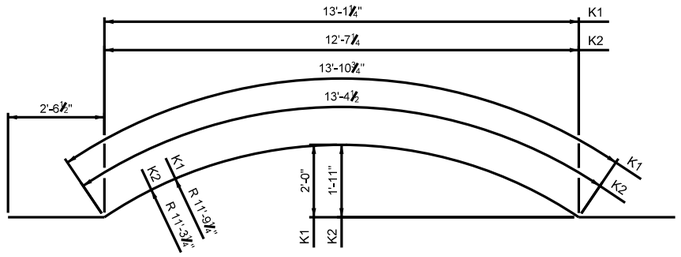

BARS K

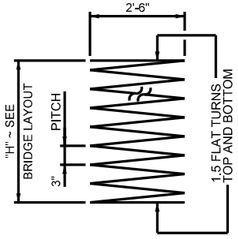

BARS Z

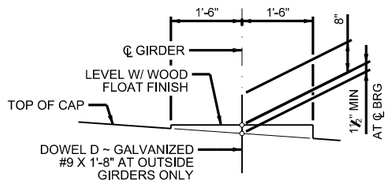

BEARING SEAT DETAIL

(BEARING SURFACE MUST BE CLEAN AND FREE OF ALL LOOSE MATERIAL BEFORE PLACING BEARING PAD.)

TABLE OF ESTIMATED CAP QUANTITIES BENT 2

BAR	NO	SIZE	LENGTH	WEIGHT
A	6	#11	52'-2"	1,662
B	6	#11	52'-2"	1,662
C	36	#5	7'-2"	270
D	4	#9	1'-8"	23
K1	18	#6	19'-0"	514
S1	120	#5	13'-8"	1,711
S2	3	#5	18'-11"	60
S3	1	#5	19'-8"	21
CC1-CC6 (AVG)	12	#5	11'-5"	143
T1	10	#5	52'-2"	544
T2	2	#5	52'-2"	109
T3	2	#5	8'-7"	18
T4	2	#5	13'-7"	29
T5	2	#5	12'-3"	26
T6	2	#5	8'-8"	19
T7	2	#5	5'-11"	13
T8	2	#5	8'-11"	19
T9	2	#5	8'-6"	18
T10	2	#5	6'-11"	15
T11	2	#5	4'-7"	10
T12	2	#5	6'-4"	14
T13	2	#5	6'-2"	13
T14	2	#5	5'-10"	13
T15	2	#5	3'-7"	8
T16	2	#5	4'-4"	10
T17	2	#5	4'-3"	9
T18	2	#5	5'-0"	11
T19	2	#5	2'-9"	6
T20	2	#5	4'-3"	9
REINFORCING STEEL			LB	6,979
CLASS "C" CONC (CAP)			CY	40.8

TABLE OF ESTIMATED CAP QUANTITIES BENT 3

BAR	NO	SIZE	LENGTH	WEIGHT
A	6	#11	49'-2"	1,567
B	6	#11	49'-2"	1,567
C	36	#5	7'-2"	270
D	4	#9	1'-8"	23
K2	18	#6	18'-5"	499
S1	114	#5	13'-8"	1,625
S4	1	#5	18'-10"	20
S5	1	#5	19'-5"	21
CC7-CC12 (AVG)	12	#5	11'-4"	142
T1	10	#5	49'-2"	513
T2	2	#5	49'-2"	103
T3	2	#5	8'-2"	18
T4	2	#5	13'-0"	28
T5	2	#5	12'-0"	26
T6	2	#5	7'-1"	15
T7	2	#5	5'-9"	12
T8	2	#5	8'-8"	19
T9	2	#5	8'-4"	18
T10	2	#5	5'-4"	12
T11	2	#5	4'-6"	10
T12	2	#5	6'-3"	13
T13	2	#5	6'-1"	13
T14	2	#5	4'-4"	9
T15	2	#5	3'-6"	8
T16	2	#5	4'-3"	9
T17	2	#5	4'-3"	9
T18	2	#5	3'-5"	8
T19	4	#5	2'-9"	12
REINFORCING STEEL			LB	6,589
CLASS "C" CONC (CAP)			CY	38.0

TABLE OF ESTIMATED COLUMN QUANTITIES (3)

BENT	"H"	BARS V 56 ~ #11		BARS Z 4 ~ #4		BARS CS #5 AT 1-0" MAX			REINF STEEL	CLASS "C" CONC (COL)
NO.	HEIGHT	LENGTH	WEIGHT	LENGTH	WEIGHT	NO.	LENGTH	WEIGHT	LB	CY
2	13	15'-9"	4,686	432'-2"	1155	56	11'-6"	672	6,513	20.4
3	16	18'-9"	5,579	526'-6"	1407	68	11'-6"	816	7,801	25.1

GENERAL NOTES:
1. SEE BENT 2 SHEET FOR GENERAL NOTES.

(1) SEE AESTHETIC DETAILS SHEET.

(2) LAP V BARS INSIDE SPIRAL WITH PROJECTED DRILLED SHAFT REINFORCEMENT.

(3) REINFORCEMENT SHOWN IS BASED ON "H" VALUES SHOWN. FOR EACH LINEAR FOOT VARIATION IN COLUMN HEIGHT, MAKE THE FOLLOWING ADJUSTMENTS:
BARS V, ADD/SUBTRACT 1'-0"
BARS Z, ADD/SUBTRACT 31'-5"
BARS CS, ADD/SUBTRACT 4 BARS
REINFORCING STEEL, ADD/SUBTRACT 429 LB
CL C CONC (COL), ADD/SUBTRACT 1.6 CY

HL93 LOADING

WYOMING SPRINGS
SEGMENT 1
ROUND ROCK, TX

ROUND ROCK, TEXAS

AGUIRRE & FIELDS
ENGINEERING INNOVATORS
TBPE FIRM REGISTRATION # 739

Revision No.	Date	Description

STATE OF TEXAS
RYAN J. WILLIAMS
110418
LICENSED PROFESSIONAL ENGINEER
4/17/2023

100% SUBMITTAL

Project No.:	36179
Issued:	3/30/2023
Drawn By:	QBH
Checked By:	RJW
Scale:	

Sheet Title
SB WYOMING SPRINGS AT DRY FORK CREEK BENT DETAILS

309
Sheet Number

NORTH OFFICE
NORTH OFFICE
3/30/2023 6:47:28 PM
USER: cwilliams
CITY OF ROUND ROCK
Shaun Williams
\\AFS1\Projects\36179 WYOMING SPRINGS\CAD\Sheets\SB WYOMING SPRINGS AT DRY FORK CREEK BENT DETAILS.dwg

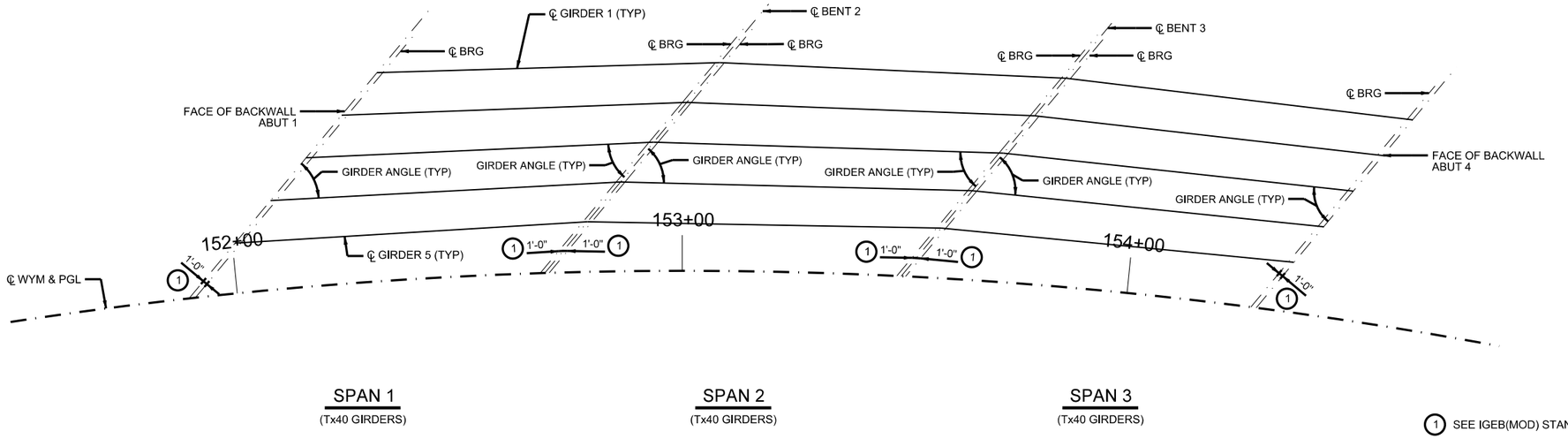

1. SEE IGEB(MOD) STANDARD FOR ORIENTATION OF DIMENSION.
2. GIRDER LENGTHS SHOWN ARE BOTTOM GIRDER FLANGE LENGTHS WITH ADJUSTMENTS MADE FOR GIRDER SLOPE.

BENT REPORT

ABUT NO. 1 (N 56 17 29.00 W)
DISTANCE BETWEEN STATION LINE AND GRDR 1, 65.895 L

		GRDR SPAC. (C.L. ABUT)	GRDR ANGLE D	M	S
SPAN 1	GRDR 1	0.000	48	32	49
	GRDR 2	12.448	48	5	7
	GRDR 3	12.448	47	37	50
	GRDR 4	12.448	47	10	55
	GRDR 5	12.448	46	44	24
	TOTAL	49.792			

BENT NO. 2 (N 56 17 29.00 W)
DISTANCE BETWEEN STATION LINE AND GRDR 1, 61.395 L

		GRDR SPAC. (C.L. BENT)	GRDR ANGLE D	M	S
SPAN 1	GRDR 1	0.000	48	32	49
	GRDR 2	11.615	48	5	7
	GRDR 3	11.615	47	37	50
	GRDR 4	11.615	47	10	55
	GRDR 5	11.615	46	44	24
	TOTAL	46.460			

BENT NO. 2 (N 56 17 29.00 W)
DISTANCE BETWEEN STATION LINE AND GRDR 1, 61.395 L

		GRDR SPAC. (C.L. BENT)	GRDR ANGLE D	M	S
SPAN 2	GRDR 1	0.000	52	46	51
	GRDR 2	11.615	52	23	16
	GRDR 3	11.615	51	59	56
	GRDR 4	11.615	51	36	51
	GRDR 5	11.615	51	14	0
	TOTAL	46.460			

BENT NO. 3 (N 56 17 29.00 W)
DISTANCE BETWEEN STATION LINE AND GRDR 1, 57.772 L

		GRDR SPAC. (C.L. BENT)	GRDR ANGLE D	M	S
SPAN 2	GRDR 1	0.000	52	46	51
	GRDR 2	10.942	52	23	16
	GRDR 3	10.942	51	59	56
	GRDR 4	10.942	51	36	51
	GRDR 5	10.942	51	14	0
	TOTAL	43.768			

BENT NO. 3 (N 56 17 29.00 W)
DISTANCE BETWEEN STATION LINE AND GRDR 1, 57.772 L

		GRDR SPAC. (C.L. BENT)	GRDR ANGLE D	M	S
SPAN 3	GRDR 1	0.000	57	3	14
	GRDR 2	10.942	56	43	16
	GRDR 3	10.942	56	23	27
	GRDR 4	10.942	56	3	47
	GRDR 5	10.942	55	44	15
	TOTAL	43.768			

ABUT NO. 4 (N 56 17 29.00 W)
DISTANCE BETWEEN STATION LINE AND GRDR 1, 54.851 L

		GRDR SPAC. (C.L. ABUT)	GRDR ANGLE D	M	S
SPAN 3	GRDR 1	0.000	57	3	14
	GRDR 2	10.398	56	43	16
	GRDR 3	10.398	56	23	27
	GRDR 4	10.398	56	3	47
	GRDR 5	10.398	55	44	15
	TOTAL	41.592			

GIRDER REPORT

GRDR REPORT, SPAN 1

	HORIZONTAL DISTANCE C-C BENT	C-C BRG.	TRUE DISTANCE (2) BOT. BM. FLG.	GRDR SLOPE
GRDR 1	76.929	74.595	76.38	0.0322
GRDR 2	77.483	75.139	76.93	0.0315
GRDR 3	78.041	75.688	77.49	0.0309
GRDR 4	78.605	76.241	78.05	0.0302
GRDR 5	79.173	76.800	78.61	0.0294

GRDR REPORT, SPAN 2

	HORIZONTAL DISTANCE C-C BENT	C-C BRG.	TRUE DISTANCE (2) BOT. BM. FLG.	GRDR SLOPE
GRDR 1	77.735	75.735	77.29	0.0375
GRDR 2	78.144	76.144	77.70	0.0377
GRDR 3	78.557	76.557	78.11	0.0378
GRDR 4	78.973	76.973	78.53	0.0379
GRDR 5	79.393	77.393	78.95	0.0378

GRDR REPORT, SPAN 3

	HORIZONTAL DISTANCE C-C BENT	C-C BRG.	TRUE DISTANCE (2) BOT. BM. FLG.	GRDR SLOPE
GRDR 1	78.352	76.161	77.86	0.0367
GRDR 2	78.650	76.454	78.16	0.0379
GRDR 3	78.950	76.749	78.46	0.0383
GRDR 4	79.253	77.047	78.76	0.0386
GRDR 5	79.558	77.348	79.07	0.0389

HL93 LOADING

WYOMING SPRINGS
SEGMENT 1
ROUND ROCK, TX

ROUND ROCK, TEXAS

AGUIRRE & FIELDS
ENGINEERING INNOVATORS
TBPE FIRM REGISTRATION # 739

Revision No.	Date	Description

STATE OF TEXAS
RYAN J. WILLIAMS
110418
LICENSED
PROFESSIONAL ENGINEER
4/17/2023

100% SUBMITTAL

Project No.:	36179
Issued:	3/30/2023
Drawn By:	QBH
Checked By:	RJW
Scale:	

Sheet Title
SB WYOMING SPRINGS AT DRY FORK CREEK FRAMING PLAN

310
Sheet Number

AUSTIN OFFICE
512.451.8037
TBPE FIRM #739
3/30/2023
6:47:41 PM
User: BHall
CITY OF ROUND ROCK
Date: 3/30/23
14917-Open.rtt
14917-Open.dgn

TABLE OF DEAD LOAD DEFLECTIONS

SPAN NO.	GIRDER NO.	"A" FT	"B" FT
1	1	0.052	0.074
	2	0.059	0.084
	3	0.061	0.086
	4	0.062	0.088
	5	0.049	0.070
2	1	0.055	0.078
	2	0.062	0.089
	3	0.063	0.090
	4	0.065	0.092
	5	0.051	0.072
3	1	0.056	0.080
	2	0.063	0.090
	3	0.064	0.091
	4	0.065	0.092
	5	0.051	0.072

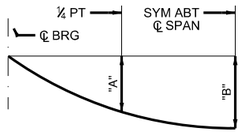

DEAD LOAD DEFLECTION DIAGRAM

NOTE: DEFLECTIONS SHOWN ARE DUE TO PRESTRESSED CONCRETE PANELS AND CAST-IN-PLACE SLAB ONLY. (Ec = 5000 KSI) ADJUST DEFLECTIONS BASED ON FIELD OBSERVATIONS AS NEEDED.

GENERAL NOTES:
1. DESIGNED IN ACCORDANCE WITH AASHTO LRFD BRIDGE DESIGN SPECIFICATIONS, 9TH EDITION (2020).
2. SEE STANDARDS PCP AND PCP-FAB FOR PANEL DETAILS NOT SHOWN.
993. SEE STANDARD IGTS FOR THICKENED SLAB END DETAILS.
4. SEE STANDARD IGMS FOR MISCELLANEOUS DETAILS.
5. SEE STANDARD SEJ-M FOR SEALED EXPANSION JOINT DETAILS.
6. SEE STANDARD BRSM FOR ADDITIONAL DETAILS AT SIDEWALKS.
7. SEE STANDARD BS-EJCP FOR SIDEWALK COVER PLATE DETAILS.
8. SEE STANDARD BL FOR BRIDGE LIGHTING DETAILS.
9. SEE APPLICABLE RAIL DETAILS FOR RAIL ANCHORAGE IN SLAB.
10. SEE "AESTHETIC DETAILS" SHEETS FOR AESTHETIC INFORMATION.
11. COVER DIMENSIONS ARE CLEAR DIMENSIONS UNLESS NOTED OTHERWISE.

MATERIAL NOTES:
1. PROVIDE CLASS S CONCRETE (f'c = 4000 PSI).
2. PROVIDE GRADE 60 REINFORCING STEEL.
3. PROVIDE BAR LAPS, WHERE REQUIRED, AS FOLLOWS: UNCOATED ~ #4 = 1'-7"
4. DEFORMED WELDED WIRE REINFORCEMENT (WWR)(ASTM A1064) OF EQUAL SIZE AND SPACING MAY BE SUBSTITUTED FOR BARS A, AA, D, OA, P, OR T UNLESS NOTED OTHERWISE.

(1) CONDUIT FOR ILLUMINATION POLE BRACKET SHALL BE PLACED PRIOR TO REINFORCED CONCRETE SLAB POUR.

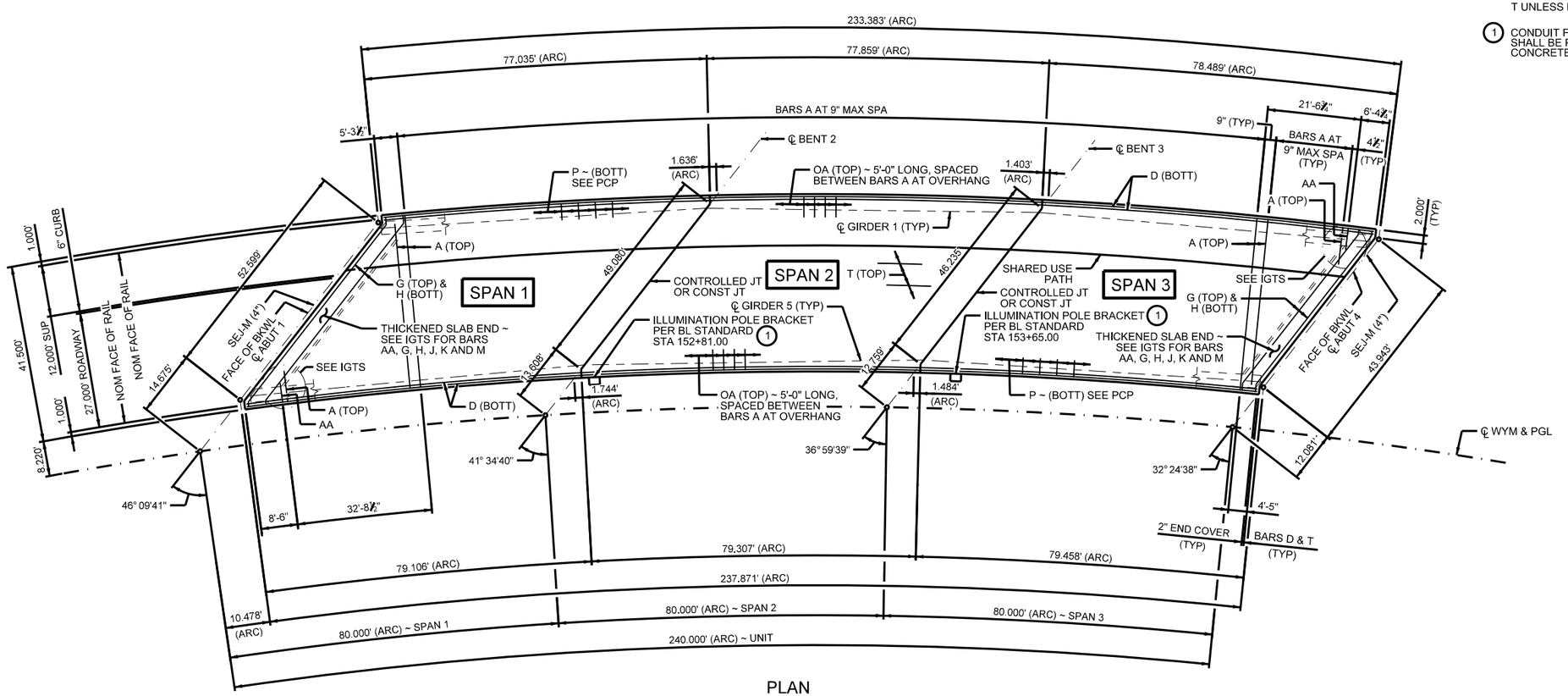

PLAN

HL93 LOADING

WYOMING SPRINGS
SEGMENT 1
ROUND ROCK, TX

ROUND ROCK, TEXAS

AGUIRRE & FIELDS
ENGINEERING INNOVATORS
TBPE FIRM REGISTRATION # 739

Revision No.	Date	Description

STATE OF TEXAS
RYAN J. WILLIAMS
110418
LICENSED PROFESSIONAL ENGINEER
4/17/2023

100% SUBMITTAL

Project No.:	36179
Issued:	3/30/2023
Drawn By:	QBH
Checked By:	RJW
Scale:	

Sheet Title
SB WYOMING SPRINGS AT DRY FORK CREEK 240.00' PCGU SHEET 01 OF 02

311
Sheet Number

AUSTIN OFFICE 512.451.8037 TBPE FIRM # 739
1813-Dgn.dgn 1813-Sht-Cvr.dwg
Design DETAILS
CITY OF ROUND ROCK
USER: dwall
6:47:56 PM
3/30/2023

TABLE OF SECTION DEPTHS

SPAN NO.	GIRDER NO.	"X" AT ℄ BRG (2)	"Y" AT ℄ BRG	"Z" AT ℄ SPAN (3)
1	1 - 4	1'- 0 1/2"	4'-4 1/2"	9 7/8"
	5			9 5/8"
2	1 - 3	1'-0"	4'-4"	10 1/4"
	4			10 1/8"
	5			9 5/8"
3	1 & 5	11 1/2"	4'-3 1/2"	9 3/4"
	2 - 4			9 7/8"

TABLE OF ESTIMATED QUANTITIES

SPAN	REINF CONCRETE SLAB	REINF STEEL CONC SLAB (4)	BRIDGE SIDEWALK	REINF STEEL SIDEWALK (5)	PRESTR CONC GIRDERS (Tx40) (6)	TOTAL REINF STEEL
	SF	LB	SF	LB	LF	LB
1	3,239	7,449	1,042	2,292	387.46	9,741
2	3,260	7,499	1,052	2,315	390.58	9,814
3	3,277	7,537	1,060	2,332	392.31	9,869
TOTAL	9,776	22,485	3,154	6,939	1,170.35	29,424

GENERAL NOTES:
1. SEE SHEET 01 OF 02 FOR GENERAL NOTES.

(2) SEE STANDARD PCP FOR HAUNCH REINFORCING DETAIL.

(3) "Z" VALUE SHOWN IS AN APPROXIMATION BASED ON THEORETICAL GIRDER CAMBER, DEAD LOAD DEFLECTION, AND ROADWAY PROFILE.

(4) REINFORCING STEEL WEIGHT FOR CONCRETE SLAB IS CALCULATED USING AN APPROXIMATE FACTOR OF 2.3 LBS PER SQ FT.

(5) REINFORCING STEEL FOR SIDEWALK IS CALCULATED USING AN APPROXIMATE FACTOR OF 2.2 LBS PER SQ FT.

(6) GIRDER LENGTHS SHOWN ARE BOTTOM GIRDER FLANGE LENGTHS WITH ADJUSTMENTS MADE FOR GIRDER SLOPE.

(7) DESIGNED FOR A MAXIMUM LOAD OF 50 LB/FT (INCLUDES CONDUITS AND HANGERS).

BAR TABLE

BAR	SIZE
A	#4
AA	#5
D	#4
G	#4
H	#4
J	#4
K	#4
M	#4
OA	#5
P	#4
T	#4
UP	#4

OVERHANG DIMENSIONS

SPAN	LT EDGE		RT EDGE	
	MIN	MAX	MIN	MAX
1	3.000'	3.707'	2.225'	3.000'
2	3.000'	3.722'	2.221'	3.000'
3	3.000'	3.733'	2.217'	3.000'

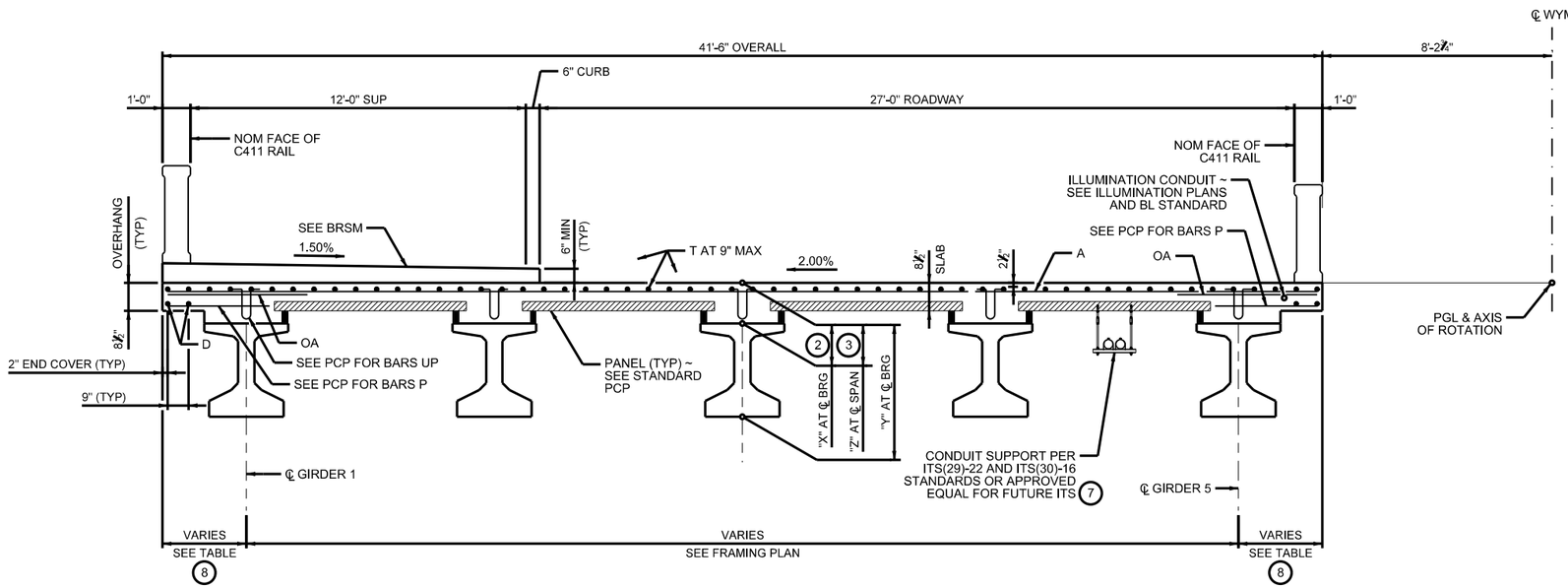

TYPICAL TRANSVERSE SECTION

(8) 3.000' RADIAL AT ℄ ABUTMENT AND BENT.

HL93 LOADING

WYOMING SPRINGS
SEGMENT 1
ROUND ROCK, TX

ROUND ROCK, TEXAS

AGUIRRE & FIELDS
ENGINEERING INNOVATORS
TBPE FIRM REGISTRATION # 739

Revision No.	Date	Description

STATE OF TEXAS
RYAN J. WILLIAMS
110418
LICENSED
PROFESSIONAL ENGINEER
4/17/2023

100% SUBMITTAL

Project No.:	36179
Issued:	3/30/2023
Drawn By:	QBH
Checked By:	RJW
Scale:	

Sheet Title
SB WYOMING SPRINGS
AT DRY FORK CREEK
240.00' PCGU
SHEET 02 OF 02

312
Sheet Number

AUSTIN OFFICE
3030 Esperson
Austin, Texas 78705
(512) 454-4797
TBPE FIRM REGISTRATION # 739
Date: 3/30/2023 6:46:11 PM
User: dwhall
CITY OF ROUND ROCK
Drgs: SHEETS

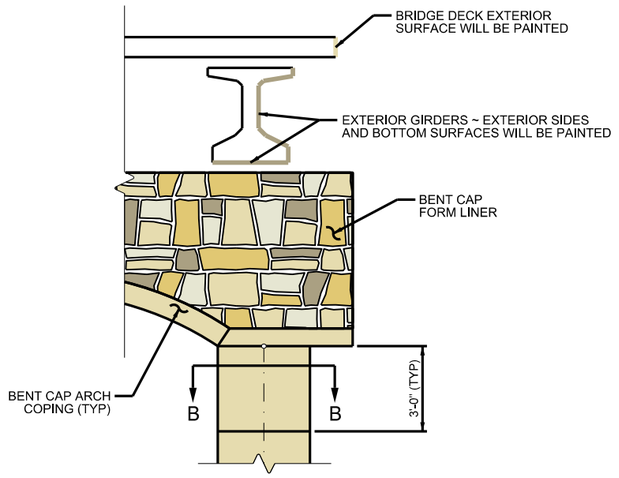

BENT CAP OVERHANG ELEVATION

RAIL NOTES:

1. PROVIDE TYPE A WINDOWS FOR C411 RAIL ON BRIDGE AND RETAINING WALLS.
2. FOLLOW GUIDANCE ON STANDARD C411 FOR NUMBER OF SPAN PILASTERS AND WINDOW PLACEMENT. CONTINUE PLACEMENT OF TYPE A WINDOWS BEYOND THE ABUTMENT PILASTERS AND TERMINATE RAIL AT RETAINING WALL ENDS WITH A BENT PILASTER. PLACE ABUTMENT PILASTERS ON WINGWALLS. NO METAL BEAM GUARD FENCE IS REQUIRED AT RAIL ENDS.
3. PROVIDE 1" INSET STAR IN PLACE OF BRONZE STAR AT INSIDE FACE OF ABUTMENT PILASTERS. MATCH STAR DIMENSIONS ON STANDARD C411.
4. INCLUDE CONSTRUCTION YEAR AT INSIDE FACE OF ABUTMENT PILASTERS AS SHOWN ON STANDARD C411.

MATERIAL NOTES:

1. PROVIDE CLASS H CONCRETE STRENGTH (f'c = 4,000 PSI) FOR PRECAST PANELS.
2. PROVIDE GRADE 60 REINFORCING STEEL.
3. ALL SURFACES SHALL RECEIVE A SURFACE AREA I, CLASS C FINISH IN ACCORDANCE WITH TXDOT ITEM 427 EXCEPT WHERE FORM LINER IS SPECIFIED.
4. ALL EXPOSED SURFACES SHALL RECEIVE ANTI-GRAFFITI COATING IN ACCORDANCE WITH TXDOT ITEM 740 GRAFFITI REMOVAL AND ANTI-GRAFFITI COATING, USING A TYPE II SACRIFICIAL MATERIAL THAT IS CLEAR (I.E., TRANSPARENT) AND MEETS REQUIRMENTS OF TXDOT DMS-8111. THE MAP OF TEXAS SHOWN ON RW(MSE)(MOD) STANDARD WILL NOT BE REQUIRED.
5. PAYMENT FOR COATINGS WILL NOT BE MADE DIRECTLY BUT SHALL BE CONSIDERED SUBSIDIARY TO TXDOT ITEM 427 SURFACE FINISHES FOR CONCRETE.
6. PAYMENT FOR AESTHETIC DETAILS AND FORM LINERS WILL NOT BE MADE DIRECTLY BUT SHALL BE CONSIDERED SUBSIDIARY TO TXDOT ITEM 420 CONCRETE STRUCTURES OR TXDOT ITEM 423 RETAINING WALL.

FORM LINER NOTES:

1. ELASTOMERIC FORM LINER SHALL BE:

   SCOTT SYSTEM, INC.
   #167 "ASHLAR STONE"
   OR
   CUSTOM ROCK INTERNATIONAL
   #1103 "RUSTIC ASHLAR"

2. HIGH RELIEF SYSTEM INSTALLED PER MANUFACTURER RECOMMENDATIONS.
3. THE FORM LINER IS INTENDED TO SIMULATE HAND-LAYERED IRREGULAR STONE BLOCKS. THE PATTERN USED SHALL BE AS DETAILED OR AS APPROVED BY THE CITY OF ROUND ROCK.
4. PATTERN RELIEF SHALL PROVIDE 1½" OVERALL RELIEF INCLUDING TEXTURED, INDIVIDUAL STONE SURFACES AND JOINTS.
5. STONE SIZES SHALL VARY FROM 8" TO 30".
6. PROVIDE FORM LINER FINISH WHERE SHOWN ON BENT CAPS, COVER PANEL FACES, ARCH PANEL FACES AND MSE WALL PANEL FACES.
7. FORM LINER SHALL NOT BE PLACED CONTINUOUSLY ACROSS ARCH PANEL JOINTS.
8. NO FORM LINER PANEL JOINTS SHALL BE PERMITTED ON MSE WALL PANELS. SLIP JOINTS WILL BE PERMITTED WHERE SHOWN IN THE PLANS.
9. PROVIDE 2" REVEALS VERTICALLY AT 6' ON FORM LINER APPLICATION.
10. PROVIDE SURFACE PREPARATION AND OPAQUE WATERPROOFING TO ALL CONCRETE STRUCTURE SURFACES.

CITY OF ROUND ROCK LOGO NOTES:

1. THE CITY OF ROUND ROCK LOGO SHALL BE FORMED INTO A WALL PANEL NEXT TO EACH BRIDGE ABUTMENT. THE EXACT LOCATION OF EACH LOGO SHALL BE APPROVED BY THE ENGINEER. THE COST OF FORMING THE LOGO WILL NOT BE PAID FOR DIRECTLY, BUT SHALL BE INCIDENTAL TO THE TXDOT ITEM 423 "RETAINING WALL". THE LOGO SHALL BE NO SMALLER THAN 3'-2" AS MEASURED ALONG THE LENGTH OF ANY BRUSH STROKE.
2. BRUSH STROKES SHALL BE INSET 1" USING A CUSTOM ELASTOMERIC FORM LINER. THE CITY WILL PROVIDE A DIGITAL IMAGE FILE TO BE USED FOR FORM LINER FABRICATION. PAINT EACH BRUSH STROKE AS DESCRIBED UNDER COLOR NOTES.

COLOR NOTES:

1. PROVIDE COLOR SAMPLES FOR CITY APPROVAL OF MINIMUM 3' x 3' SIZE BASED ON CONTROL SAMPLE:
   1 (R:230, G:230, B:210) - PARTIAL RETAINING WALL, BENT CAP, & AESTHETIC PANEL FORMLINER.
   2 (R:230, G:220, B:175) - BRIDGE SLAB/SUP EDGE, MSE WALL COPING, BENT COLUMN, BENT CAP ARCH COPING, AESTHETIC PANEL COPING, CONCRETE TRAFFIC RAIL, PARTIAL RETAINING WALL, BENT CAP, & AESTHETIC PANEL FORMLINER.
   3 (R:225, G:200, B:115) - PARTIAL RETAINING WALL, BENT CAP, & AESTHETIC PANEL FORMLINER,
   4 (R:170, G:160, B:130) - BEAM OUTER FACE AND ALL SOFFITS, PARTIAL RETAINING WALL, BENT CAP, & AESTHETIC PANEL FORMLINER.
2. PROVIDE A FULL SIZE SAMPLE OF THE CITY OF ROUND ROCK LOGO FOR CITY APPROVAL USING THE FOLLOWING COLORS FOR EACH BRUSH STROKE:
   PANTONE 288 (R:0, G:40, B:122) - TOP BRUSH STROKE.
   PANTONE 1805 (R:187, G:45, B:63) - LEFT BRUSH STROKE.
   PANTONE 288 80% (R:66, G:87, B:142) - RIGHT BRUSH STROKE.

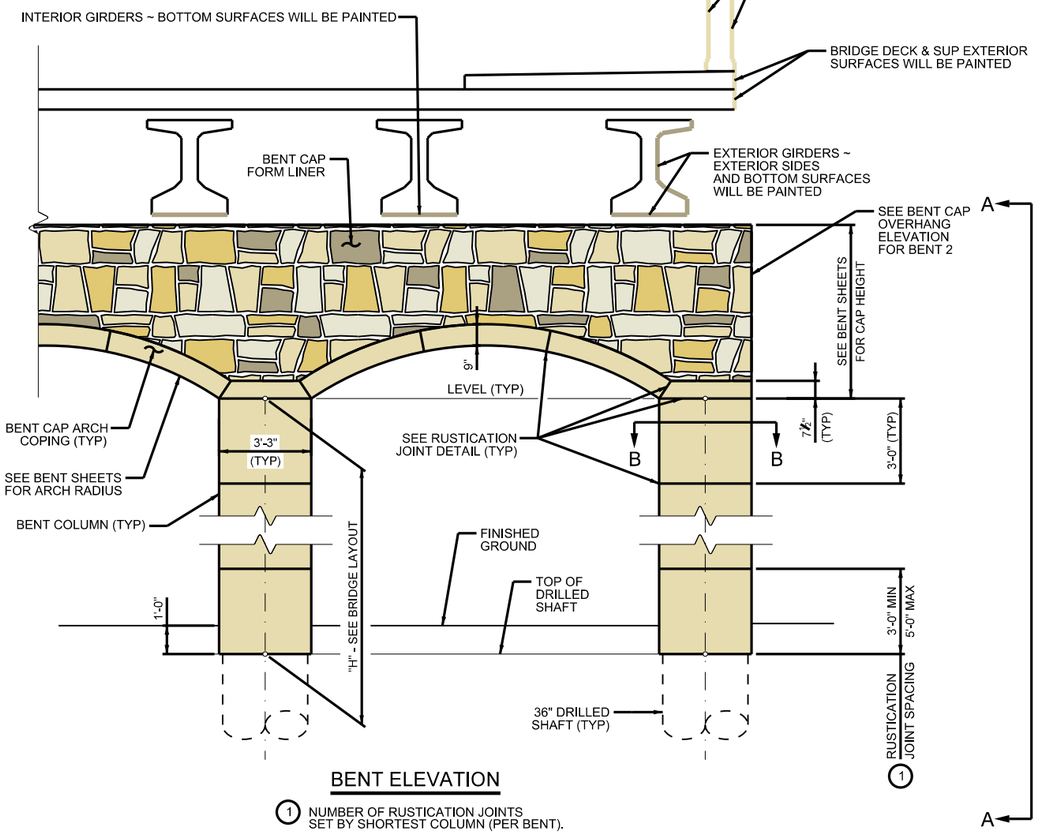

BENT ELEVATION

(1) NUMBER OF RUSTICATION JOINTS SET BY SHORTEST COLUMN (PER BENT).

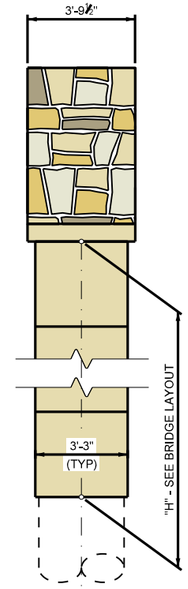

ELEVATION A-A

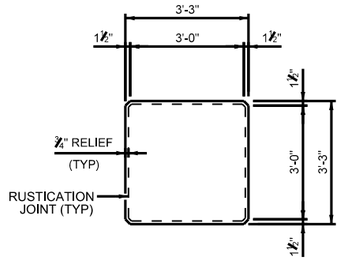

SECTION B-B

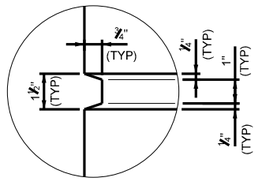

RUSTICATION JOINT DETAIL

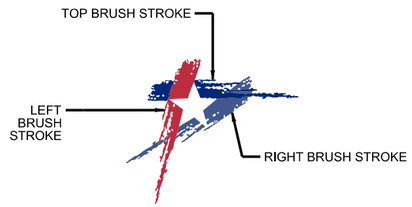

CITY OF ROUND ROCK LOGO

WYOMING SPRINGS
SEGMENT 1
ROUND ROCK, TX

AGUIRRE & FIELDS
ENGINEERING INNOVATORS
TBPE FIRM REGISTRATION # 739

Revision No.	Date	Description

STATE OF TEXAS
RYAN J. WILLIAMS
110418
LICENSED
PROFESSIONAL ENGINEER
4/17/2023

100% SUBMITTAL

Project No.:	36179
Issued:	4/17/2023
Drawn By:	QBH
Checked By:	RJW
Scale:	

Sheet Title
SB WYOMING SPRINGS AT DRY FORK CREEK AESTHETIC DETAILS

313
Sheet Number

4/17/2023 12:20:59 PM USER: default DGN: CITY OF ROUND ROCK Drive: All Files NORTH OFFICE MICROSTATION

DRILLING LOG

WinCore Version 3.0	County		Hole	B-1	District
	Highway		Structure		Date 02/29/20
	CSJ		Station	154+40	Grnd. Elev. 763.00 ft
			Offset		GW Elev. N/A

Elev. (ft)	LOG	Texas Cone Penetrometer	Strata Description	Triaxial Test: Lateral Press. (psi)	Triaxial Test: Deviator Stress (psi)	Properties: MC	LL	PI	Wet Den. (pcf)	Additional Remarks
			CLAY, Fat, Brown (CH)			18	62	34		
761.0	2		LIMESTONE, Very Hard, Tan			32				
	4	50 (0.5) 50 (0.5)				24				
	8					20				
	8					21				
	10	50 (0.5) 50 (0)								
	12									
	14	50 (1) 50 (0.5)				25				
	16									
	18									
	20	50 (0) 50 (0)								
	22									
	24	50 (0.5) 50 (0.5)				21				
	26									
	28									
	30	50 (0) 50 (0)								

Remarks:
Lat, Long: 30.530357, -97.723705

The ground water elevation was not determined during the course of this boring.

Driller: **Logger:** **Organization: Raba-Kistner Consultants, Inc.**

FIGURE: 2a

DRILLING LOG

WinCore Version 3.0	County		Hole	B-1	District
	Highway		Structure		Date 02/29/20
	CSJ		Station	154+40	Grnd. Elev. 763.00 ft
			Offset		GW Elev. N/A

Elev. (ft)	LOG	Texas Cone Penetrometer	Strata Description	Triaxial Test: Lateral Press. (psi)	Triaxial Test: Deviator Stress (psi)	Properties: MC	LL	PI	Wet Den. (pcf)	Additional Remarks
732.0			LIMESTONE, Very Hard, Tan							
	32		LIMESTONE, Very Hard, Gray							
	34	50 (0) 50 (0)				22				
	36									
	38									
	40	50 (0) 50 (0.5)								
	42									
	44	50 (0) 50 (0)				19				
	48									
	48									
	50	50 (0.5) 50 (0)								
	52									
	54	50 (0.5) 50 (0)								
	56									
	58									
	60	50 (0.5) 50 (0.5)								

Remarks:
Lat, Long: 30.530357, -97.723705

The ground water elevation was not determined during the course of this boring

Driller: **Logger:** **Organization: Raba-Kistner Consultants, Inc.**

FIGURE: 2b

STATE OF TEXAS
RICHARD T. SHIMONO
135020
LICENSED
PROFESSIONAL ENGINEER

4/05/2023

WYOMING SPRINGS
SEGMENT 1
ROUND ROCK, TX

ROUND ROCK, TEXAS

RABA KISTNER
TBPE Firm Registration No. F-3257

Revision No.	Date	Description

100% SUBMITTAL

Project No.:	36179
Issued:	3/15/2023
Drawn By:	QBH
Checked By:	RJW
Scale:	

Sheet Title
SB WYOMING SPRINGS AT DRY FORK CREEK BORING LOGS SHEET 01 OF 03

314
Sheet Number

DRILLING LOG

3 of 3

WinCore Version 3.0 | County: Highway: CSJ | Hole: B-1 | Structure: | Station: 154+40 | Offset: | District: | Date: 02/29/20 | Grnd. Elev.: 763.00 ft | GW Elev.: N/A

Elev. (ft)	LOG	Texas Cone Penetrometer	Strata Description	Triaxial Test: Lateral Press. (psi)	Triaxial Test: Deviator Stress (psi)	Properties: MC	LL	PI	Wet Den. (pcf)	Additional Remarks
			LIMESTONE, Very Hard, Gray							
62										
84		50 (0) 50 (0)								
66										
693.0 68		50 (0) 50 (0)								
70										
72										
74										
76										
78										
80										
82										
84										
86										
88										
90										

Remarks:
Lat, Long: 30.530357, -97.723705

The ground water elevation was not determined during the course of this boring.

Driller: **Logger:** **Organization: Raba-Kistner Consultants, Inc.**

FIGURE: 2c

DRILLING LOG

1 of 2

WinCore Version 3.0 | County: Highway: CSJ | Hole: B-2 | Structure: | Station: 152+50 | Offset: | District: | Date: 02/26/20 | Grnd. Elev.: 754.00 ft | GW Elev.: 745.00 ft

Elev. (ft)	LOG	Texas Cone Penetrometer	Strata Description	Triaxial Test: Lateral Press. (psi)	Triaxial Test: Deviator Stress (psi)	Properties: MC	LL	PI	Wet Den. (pcf)	Additional Remarks
			CLAY, Fat, Brown (CH)			16				
2						16				
4		50 (0.5) 50 (0.5)				19				
748.0 6			LIMESTONE, Very Hard, Tan			24				
8						27				
10		50 (1.5) 50 (1)								
12										
14		50 (1) 50 (0.5)				17				
738.0 16			LIMESTONE, Very Hard, Gray							
18										
20		50 (0.5) 50 (0.5)								
22										
24		50 (1) 50 (1)				19				
26										
28										
30		50 (1) 50 (0.5)								

Remarks:
Lat, Long: 30.529762, -97.723629

Any ground water elevation information provided on this boring log is representative of conditions existing on the day and for the specific location where this information was collected. The actual groundwater elevation may fluctuate due to time, climatic conditions, and/or construction activity.

Driller: **Logger:** **Organization: Raba-Kistner Consultants, Inc.**

FIGURE: 3a

STATE OF TEXAS
RICHARD T. SHIMONO
135020
LICENSED
PROFESSIONAL ENGINEER

4/05/2023

WYOMING SPRINGS
SEGMENT 1
ROUND ROCK, TX

ROUND ROCK, TEXAS

RABA KISTNER
TBPE Firm Registration No. F-3257

Revision No.	Date	Description

100% SUBMITTAL

Project No.:	36179
Issued:	3/15/2023
Drawn By:	QBH
Checked By:	RJW
Scale:	

Sheet Title
SB WYOMING SPRINGS AT DRY FORK CREEK BORING LOGS SHEET 02 OF 03

315
Sheet Number

DRILLING LOG

WinCore Version 3.0

County
Highway
CSJ

Hole B-2
Structure
Station 152+50
Offset

District
Date 02/26/20
Grnd. Elev. 754.00 ft
GW Elev. 745.00 ft

Elev. (ft)	LOG	Texas Cone Penetrometer	Strata Description	Triaxial Test: Lateral Press. (psi)	Triaxial Test: Deviator Stress (psi)	Properties: MC	Properties: LL	Properties: PI	Properties: Wet Den. (pcf)	Additional Remarks
			LIMESTONE, Very Hard, Gray							
32										
34		50 (1) 50 (0.5)				22				
36										
38										
40		50 (0) 50 (0)								
42										
44		50 (0.5) 50 (0)				19				
48										
48										
704.0 50		50 (0.5) 50 (0)								
52										
54										
56										
58										
60										

Remarks:
Lat, Long: 30.529762, -97.723629

Any ground water elevation information provided on this boring log is representative of conditions existing on the day and for the specific location where this information was collected. The actual groundwater elevation may fluctuate due to time, climatic conditions, and/or construction activity.

Driller: **Logger:** **Organization: Raba-Kistner Consultants, Inc.**

FIGURE: 3b

STATE OF TEXAS
RICHARD T. SHIMONO
135020
LICENSED
PROFESSIONAL ENGINEER

4/05/2023

WYOMING SPRINGS
SEGMENT 1
ROUND ROCK, TX

ROUND ROCK, TEXAS

RABA KISTNER
TBPE Firm Registration No. F-3257

Revision No.	Date	Description

100% SUBMITTAL

Project No.:	36179
Issued:	3/15/2023
Drawn By:	QBH
Checked By:	RJW
Scale:	

Sheet Title
SB WYOMING SPRINGS AT DRY FORK CREEK
BORING LOGS
SHEET 03 OF 03

316
Sheet Number

STRUCTURE	DESIGNED GIRDERS									DEPRESSED STRAND PATTERN		CONCRETE		OPTIONAL DESIGN				
	SPAN NO.	GIRDER NO.	GIRDER TYPE	PRESTRESSING STRANDS						NO.	TO END (in)	RELEASE STRGTH (1) f'ci (ksi)	MINIMUM 28 DAY COMP STRGTH f'c (ksi)	DESIGN LOAD COMP STRESS (TOP ℄) (SERVICE I) fct(ksi)	DESIGN LOAD TENSILE STRESS (BOTT ℄) (SERVICE III) fcb(ksi)	REQUIRED MINIMUM ULTIMATE MOMENT CAPACITY (STRENGTH I) (kip-ft)	LIVE LOAD DISTRIBUTION FACTOR (2)	
				NON-STD STRAND PATTERN	TOTAL NO.	SIZE (in)	STRGTH fpu (ksi)	"e" ℄ (in)	"e" END (in)								Moment	Shear
SB WYOMING SPRINGS AT DRY FORK CREEK BRIDGE	ALL	ALL	Tx40		26	0.6	270	14.68	9.76	4	36.5	4.400	6.000	2.814	-3.399	4274	0.717	1.047

NON-STANDARD STRAND PATTERNS

PATTERN	STRAND ARRANGEMENT AT ℄ OF GIRDER

(1) Based on the following allowable stresses (ksi):

Compression = 0.65 f'ci

Tension = $0.24\sqrt{f'ci}$

Optional designs must likewise conform.

(2) Portion of full HL93.

DESIGN NOTES:

Designed according to AASHTO LRFD Bridge Design Specifications.

Optional designs for girders 120 feet or longer must have a calculated residual camber equal to or greater than that of the designed girder.

Prestress losses for the designed girders have been calculated for a relative humidity of 60 percent. Optional designs must likewise conform.

FABRICATION NOTES:

Provide Class H concrete.

Provide Grade 60 reinforcing steel bars.

Use low relaxation strands, each pretensioned to 75 percent of fpu.

Strand debonding must comply with Item 424.4.2.2.2.4. Full-length debonded strands are only permitted in positions marked Δ. Double wrap full-length debonded strands in outer most position of each row.

When shown on this sheet, the Fabricator has the option of furnishing either the designed girder or an approved optional design. All optional design submittals must be signed, sealed and dated by a Professional Engineer registered in the State of Texas.

Seal cracks in girder ends exceeding 0.005" in width as directed by the Engineer. The fabricator is permitted to decrease the spacing of Bars R and S by providing additional bars to help limit crack width provided the decreased spacing results in no less than 1" clear between bars. The fabricator must take an approved corrective action if cracks greater than 0.005" form on a repetitive basis.

DEPRESSED STRAND DESIGNS:

Locate strands for the designed girder as low as possible on the 2" grid system unless a non-standard strand pattern is indicated. Fill row "2.5", then row "4.5", then row "6.5", etc., beginning each row in the "A" position and working outward until the required number of strands is reached. All strands in the "A" position must be depressed, maintaining the 2" spacing so that, at the girder ends, the upper two strands are in the position shown in the table.

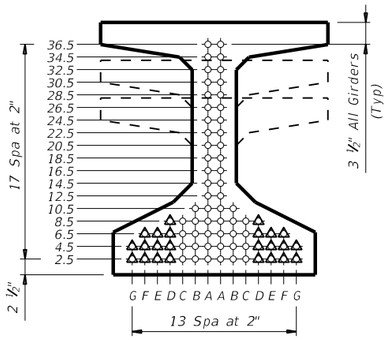

TYPE Tx28, Tx34 & Tx40

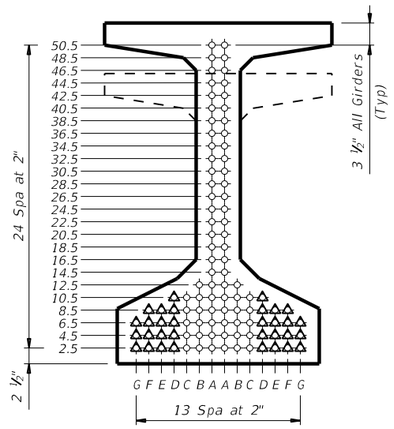

TYPE Tx46 & Tx54

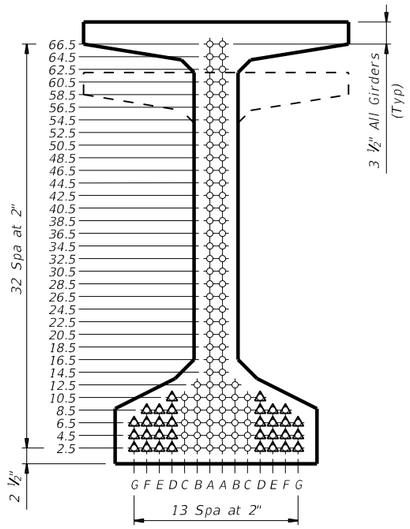

TYPE Tx62 & Tx70

HL93 LOADING

AGUIRRE & FIELDS, LP
TBPELS FIRM REGISTRATION #739

STATE OF TEXAS
RYAN J. WILLIAMS
110418
LICENSED PROFESSIONAL ENGINEER
4/17/2023

Texas Department of Transportation

Bridge Division Standard

PRESTRESSED CONCRETE I-GIRDER DESIGNS (NON-STANDARD SPANS)

IGND

FILE: IGND_DFSB.dgn	DN: TxDOT	CK: TxDOT	DW: EFC	CK: TAR
©TxDOT August 2017	CONT	SECT	JOB	HIGHWAY
REVISIONS 10-19: Modified for depressed strands only.				WYM SPR
	DIST	COUNTY		SHEET NO.
		WILLIAMSON		317

DISCLAIMER:
The use of this standard is governed by the "Texas Engineering Practice Act". No warranty of any kind is made by TxDOT for any purpose whatsoever. TxDOT assumes no responsibility for the conversion of this standard to other formats or for incorrect results or damages resulting from its use.

DATE: 3/30/2023 6:49:40 PM
FILE: c:\pw-of\pw-of-prod\quan.haaguirre-fields.com\d0226434\IGND_DFSB.dgn

DISCLAIMER:
The use of this standard is governed by the "Texas Engineering Practice Act". No warranty of any kind is made by TxDOT for any purpose whatsoever. TxDOT assumes no responsibility for the conversion of this standard to other formats or for incorrect results or damages resulting from its use.

DATE: 3/30/2023 6:49:55 PM
FILE: c:\pw-df\pw-df-prod\agn.haaguirre-fields.com\d0226434\BAS-A(MOD).dgn

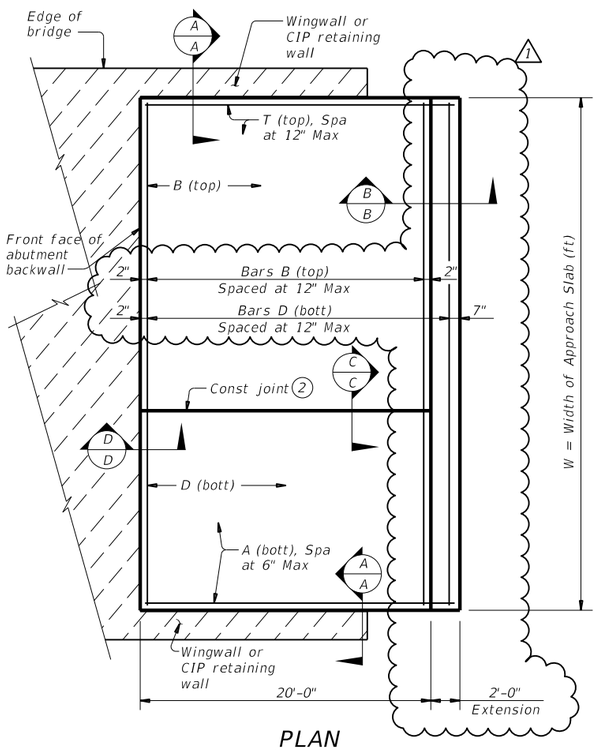

PLAN
(Showing non-skewed approach slab.)

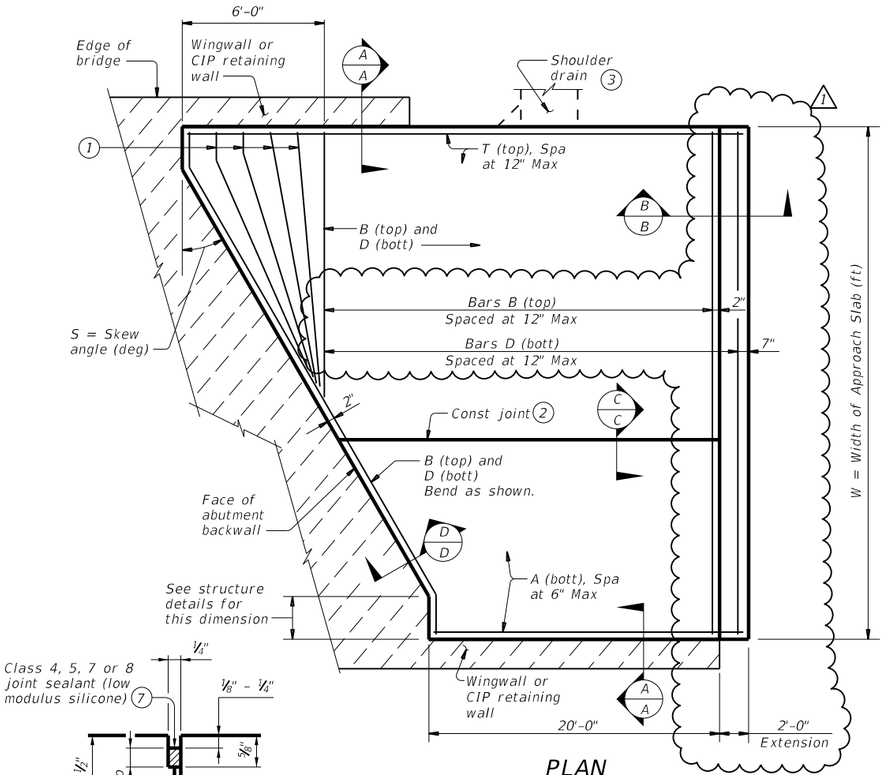

PLAN
(Showing skewed approach slab.)

BAR TABLE

BAR	SIZE
A	#8
B	#5
D	#5
T	#5

APPROXIMATE QUANTITIES 4

Reinf steel weight = 8.5 Lbs/SF of Approach Slab

Volume of Appr Slab Conc (CY) = $0.802W + 0.02W^2 \tan S$

W = Width of Approach Slab (ft)

S = Skew Angle (deg)

1. Flare Bars B and D in this region (1'-6" Max Spa, 3" Min Spa). Minimum flared bar length = 2'-6". Bend bars as necessary.
2. Provide longitudinal construction joints that align with longitudinal construction joints in the bridge slab with bridges built in stages. Other longitudinal construction joints must receive approval of the Engineer.
3. See details elsewhere in plans for shoulder drain location and details.
4. For Contractor's information only. Quantities shown are for one approach slab.
5. Multiple piece tie bars are acceptable at longitudinal construction joints provided minimum laps shown are achieved.
6. See details elsewhere in plans for required cross-slope.
7. Place in accordance with Item 438.
8. Provide backer rod that is 25% larger than joint opening and compatible with the sealant.
9. If bridge rail is present at the wingwall or CIP retaining wall, place ½" rebonded recycled tire rubber between concrete railing and top of approach slab as shown when concrete railing projects over the approach slab.
10. Unless it is shown in plans, use Dense-Graded Hot-Mix Asphalt: Type C, SAC "A" with PG 64-22, in accordance with Item 341. Material type and requirements can be modified to match existing field condition as directed by the Engineer.

GENERAL NOTES:

Construct approach slab in accordance with Item 422.

Provide Class "S" concrete with a minimum compressive strength of 4,000 psi.

Provide Grade 60 reinforcing steel.

Provide longitudinal joints as shown on the Longitudinal Saw Cut Joint Detail at lane lines and shoulders when width between longitudinal construction joints or edges of approach slab exceeds 16 feet. Saw cut joints within 24 hours of concrete placement to a depth of 1 ½" and seal in accordance with Item 438. Alternately, provide a controlled joint consisting of 1 ½" vinyl or plastic joint former (Stress Cap, Zip Strip, Stress Lock, or equal as approved by the Engineer.)

Provide rebonded recycled tire rubber joint filler that meets the requirements of DMS-6310. "Joint Sealants and Fillers."

Construct the subgrade or subbase away from the bridge for a minimum distance of 100 feet prior to the approach slab, unless otherwise indicated on the plans.

Compact and finish the subgrade or foundation for the approach slab to the typical cross-section and to the lines and grades shown on the plans.

Cure for 4 days using water or membrane curing per Item 422.

All details shown herein are subsidiary to bridge approach slab.

Cover dimensions are clear dimensions, unless noted otherwise.

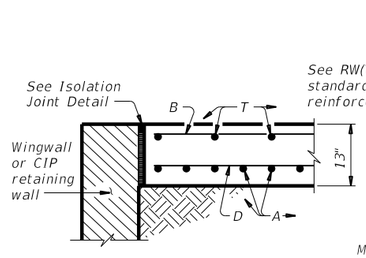

SHOWING WINGWALL OR CIP RETAINING WALL

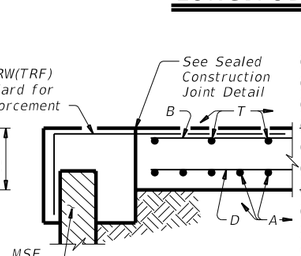

SHOWING MSE WALL

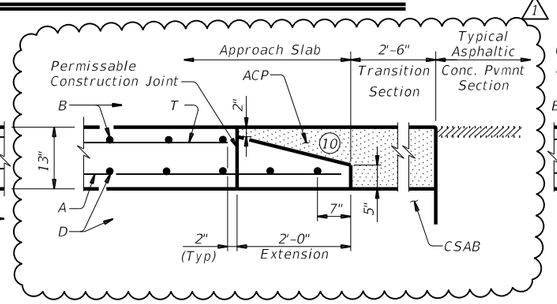

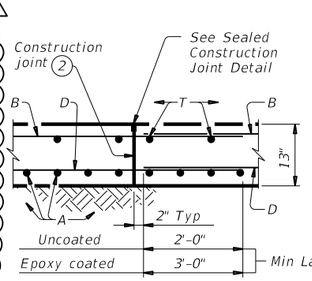

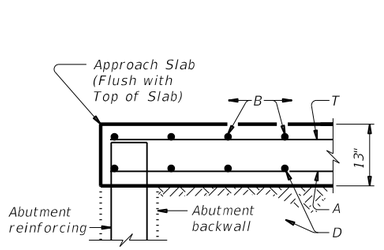

SECTION A-A

SECTION B-B

SECTION C-C 5

SECTION D-D

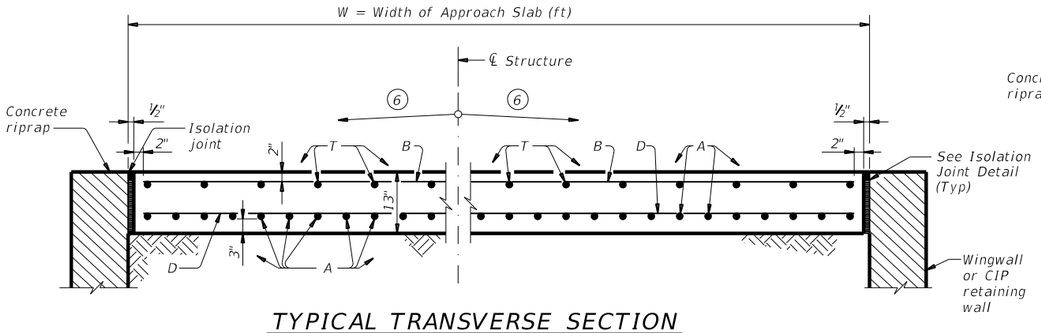

TYPICAL TRANSVERSE SECTION

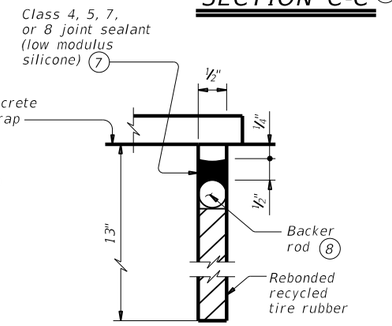

ISOLATION JOINT DETAIL

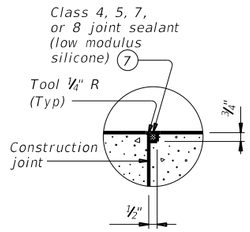

SEALED CONSTRUCTION JOINT DETAIL

AGUIRRE & FIELDS, LP
TBPELS FIRM REGISTRATION #739

STATE OF TEXAS
RYAN J. WILLIAMS
110418
LICENSED
PROFESSIONAL ENGINEER
4/17/2023

1 04-23:
-REVISED PLAN & SECTION B-B FOR ASPHALT TRANSITION
-ADDED CIRCLE NOTE 10

Texas Department of Transportation

Bridge Division Standard

BRIDGE APPROACH SLAB

ASPHALTIC CONCRETE PAVEMENT

BAS-A (MOD)

FILE: basaste1-20.dgn	DN: TxDOT	CK: TxDOT	DW: TxDOT	CK: TxDOT
©TxDOT April 2019	CONT	SECT	JOB	HIGHWAY
REVISIONS				WYM SPR
02-20: Removed stress relieving pad.	DIST	COUNTY		SHEET NO.
		WILLIAMSON		318

DISCLAIMER:
The use of this standard is governed by the "Texas Engineering Practice Act". No warranty of any kind is made by TxDOT for any purpose whatsoever. TxDOT assumes no responsibility for the conversion of this standard to other formats or for incorrect results or damages resulting from its use.

DATE: 3/30/2023 6:50:10 PM
FILE: c:\pw-of\pw-of-prod\aguirre-fields.com\d0226434\BMCS(MOD).dgn

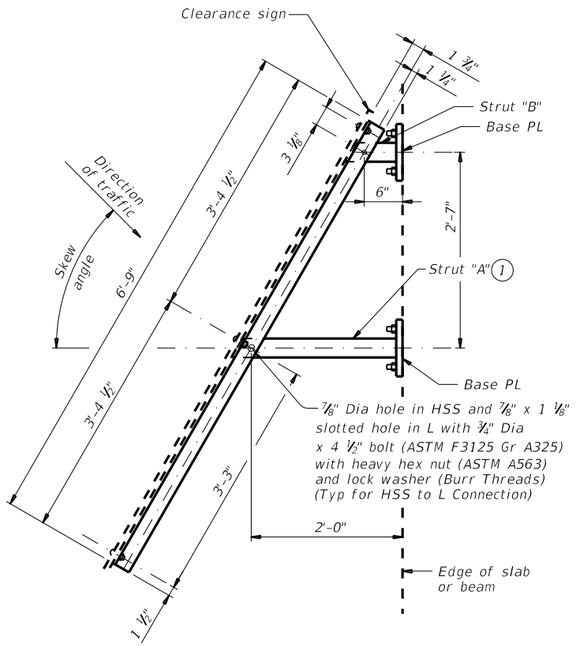

PLAN OF TYPE S MOUNT

(Used for skews over 30°)

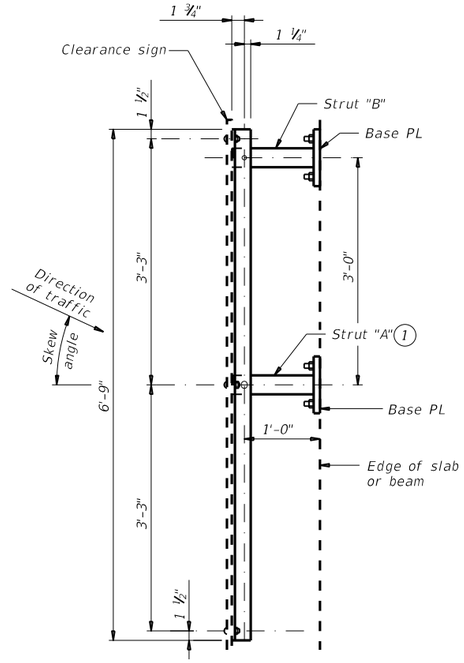

PLAN OF TYPE N MOUNT

(Used for 0° to 30° skews)

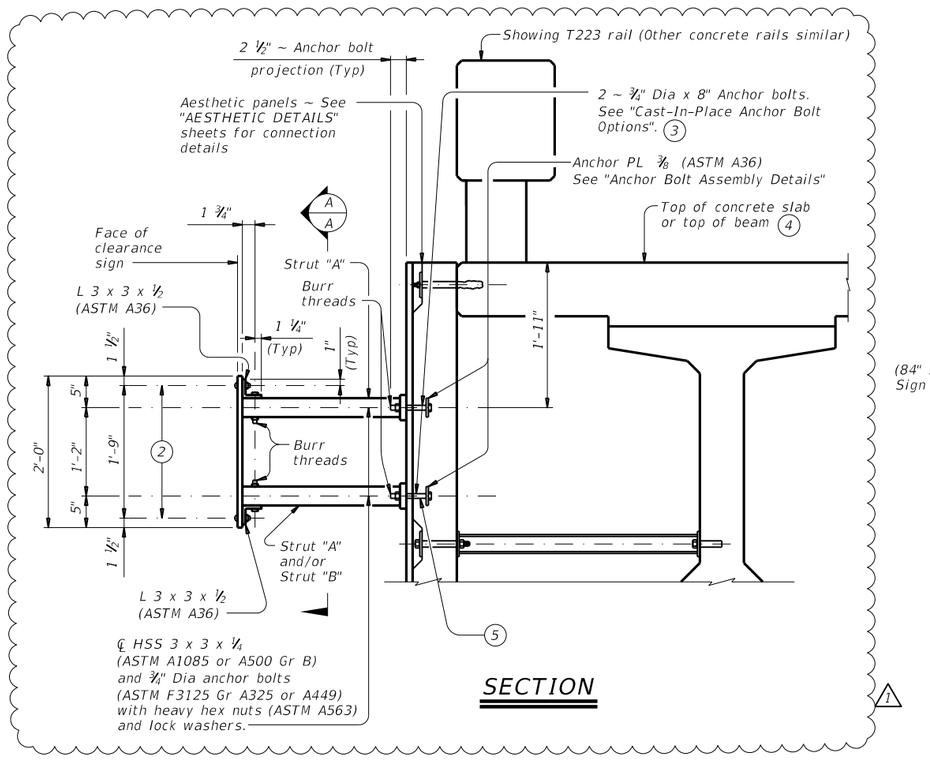

SECTION

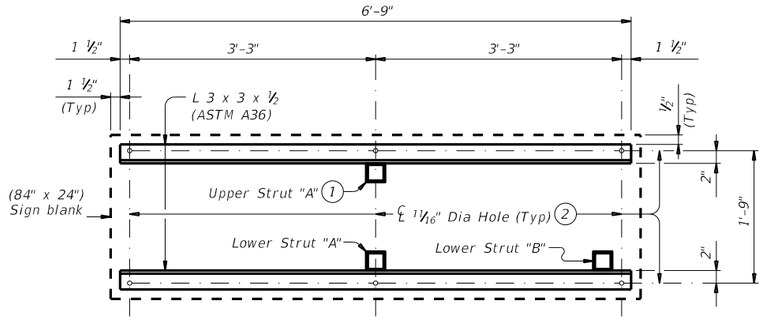

SECTION A-A

1. Locate centerline of Strut A no closer than 12" from a vertical concrete edge.
2. ℄ ⅝" Dia x 2" Hexagon socket button head cap screws (ASTM A574) with hex nuts. Attach hex nuts to L 3 x 3 x ½ by tack welding in two places. Threads must have Class 3A fit tolerance in accordance ASME B1.1. Six screws required.
3. At the Contractor's option fully threaded adhesive anchors may be use instead of cast-in-place anchor bolts. Expansion anchors are not allowed. Provide adhesive anchors that are ¾" Dia ASTM A193 Gr B7 or F1554 Gr 105 fully threaded rods with one hardened steel washer (ASTM F436) and one regular lock washer placed under heavy hex nut (ASTM A563). Embed fully threaded rods using a Type III, Class C, D, E, or F anchor adhesive. Adhesive anchor embedment depth is 8". Anchor adhesive chosen must be able to achieve a factored bond strength in tension of 2.2 kips per anchor (edge distance and spacing must be accounted for). Submit signed and sealed calculations or the manufacturer's published literature showing the proposed anchor adhesive's ability to develop this load to the Engineer for approval prior to use. Anchor installation, including hole size, drilling, and clean out, must be in accordance with Item 450, "Railing".
4. For decked slab beams topped with a 2 course surface treatment and ACP overlay.
5. Anchor bolts to be cast into decked slab beams topped with a 2 course surface treatment or ACP overlay. Anchor bolts with heavy hex nuts, regular lock washers, hardened washers and anchor plate that is embedded in the beam will be provided by the beam Fabricator.

CONSTRUCTION NOTES:

Install the vertical face of clearance sign plumb unless otherwise approved by the Engineer.

Test adhesive anchors in accordance with Item 450.3.3, "Tests". Test 1 anchor per bridge mounted clearance sign installed. Perform corrective measures to provide adequate capacity if any of the tests do not meet the required test load. Repair damage from testing as directed.

MATERIAL NOTES:

Galvanize all steel components after fabrication unless otherwise noted.

GENERAL NOTES:

This standard provides details to mount a vertical clearance sign (84" x 24") to bridges. Rail Types T631, T631LS, PR11, PR22 and PR3 are not accommodated.

The Engineer will furnish the clearance to be shown on the sign.

See Bridge Layout for sign location and mounting type (Type N or S).

Cost of furnishing, installing, relocating or removing a clearance sign, including structural steel for sign mount, is included in unit price bid for Item 644, "Small Roadside Sign Assemblies".

One Sign Blank (84" x 24") is 14 SF.

Average steel weight for one complete Type N Mount is 219 Lb.

Average steel weight for one complete Type S Mount is 233 Lb.

AGUIRRE & FIELDS, LP
TBPELS FIRM REGISTRATION #739

1 04-23:
-CHANGED SECTION FOR AESTHETIC PANEL CONNECTION

STATE OF TEXAS
RYAN J. WILLIAMS
110418
LICENSED PROFESSIONAL ENGINEER
4/17/2023

Texas Department of Transportation

Bridge Division Standard

BRIDGE MOUNTED CLEARANCE SIGN ASSEMBLY

BMCS (MOD)

FILE: bmcsste1-19.dgn	DN: TxDOT	CK: TxDOT	DW: TxDOT	CK: TxDOT
©TxDOT April 2019 REVISIONS	CONT	SECT	JOB	HIGHWAY
				WYM SPR
	DIST	COUNTY		SHEET NO.
		WILLIAMSON		319

DISCLAIMER:
The use of this standard is governed by the "Texas Engineering Practice Act". No warranty of any kind is made by TxDOT for any purpose whatsoever. TxDOT assumes no responsibility for the conversion of this standard to other formats or for incorrect results or damages resulting from its use.

DATE: 3/30/2023 6:50:11 PM
FILE: c:\pw-df\pw-df-prod\quan.haguirre-fields.com\d0226434\BMCS(MOD).dgn

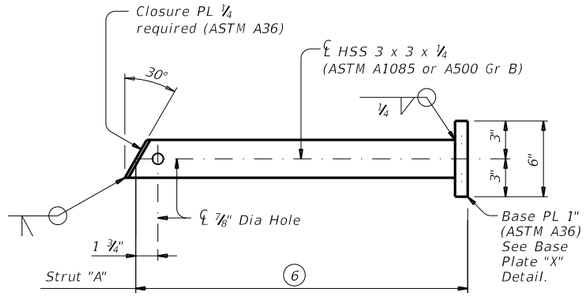

FOR T411 AND C411 RAIL TYPES

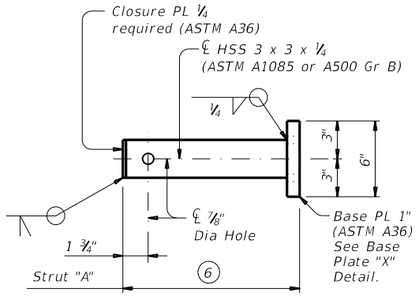

FOR T411 AND C411 RAIL TYPES

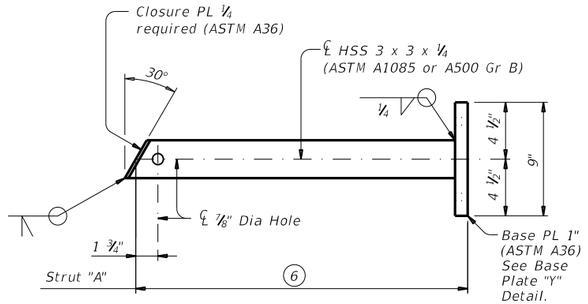

FOR T221, C221, T222, T223, C223, T401, T402, C402, T551, T552, T80HT, T80SS AND SSTR RAIL TYPES

UPPER STRUT DETAIL FOR (TYPE S MOUNT)

(Used for skews over 30°)

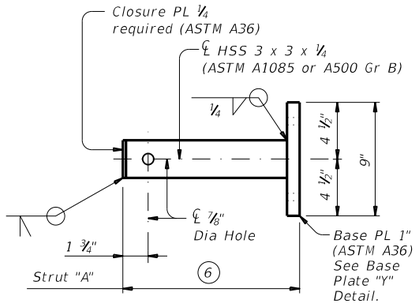

FOR T221, C221, T222, T223, C223, T401, T402, C402, T551, T552, T80HT, T80SS AND SSTR RAIL TYPES

UPPER STRUT DETAIL FOR (TYPE N MOUNT)

(Used for 0° to 30° skews)

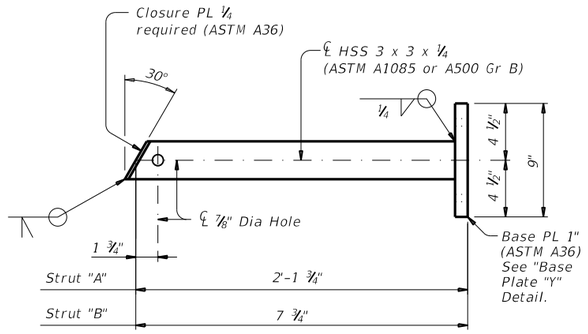

LOWER STRUT DETAILS FOR (TYPE S MOUNT)

(Used for skews over 30°)

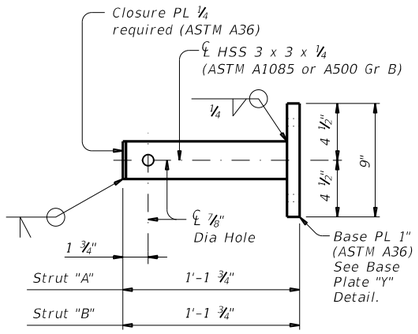

LOWER STRUT DETAILS FOR (TYPE N MOUNT)

(Used for 0° to 30° skews)

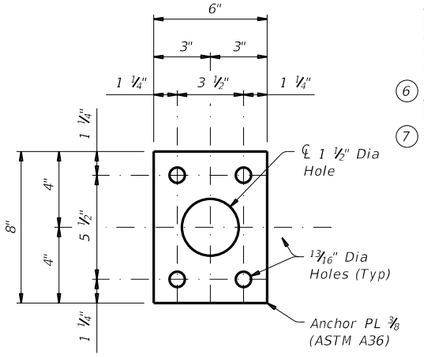

PLAN OF ANCHOR PLATE

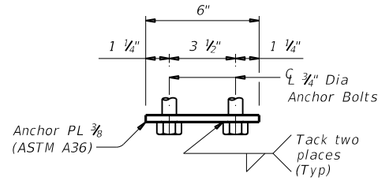

ELEVATION

ANCHOR BOLT ASSEMBLY DETAILS (3)

(Used on Base Plate "X" with T411 and C411 rail types.)

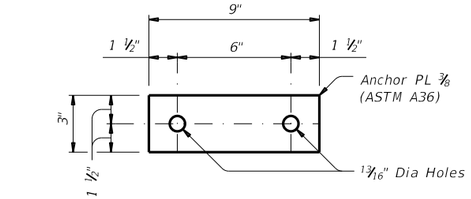

PLAN OF ANCHOR PLATE

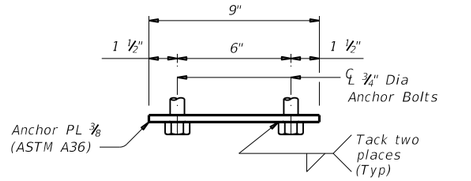

ELEVATION

ANCHOR BOLT ASSEMBLY DETAILS (3)

(Used on Base Plate "Y" and with T1F, T2P, C2P, T1W, C1W, T66 and C66 rail types.)

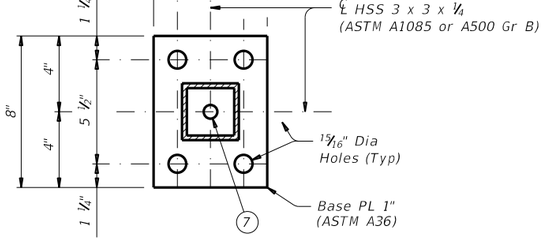

BASE PLATE "X" DETAIL

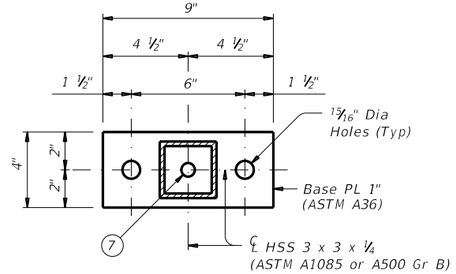

BASE PLATE "Y" DETAIL

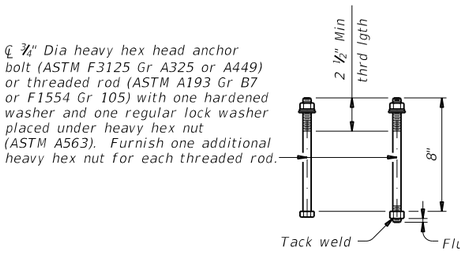

℄ ¾" Dia heavy hex head anchor bolt (ASTM F3125 Gr A325 or A449) or threaded rod (ASTM A193 Gr B7 or F1554 Gr 105) with one hardened washer and one regular lock washer placed under heavy hex nut (ASTM A563). Furnish one additional heavy hex nut for each threaded rod.

CAST-IN-PLACE ANCHOR BOLT OPTIONS (3)

(3) At the Contractor's option fully threaded adhesive anchors may be use instead of cast-in-place anchor bolts. Expansion anchors are not allowed. Provide adhesive anchors that are ¾" Dia ASTM A193 Gr B7 or F1554 Gr 105 fully threaded rods with one hardened steel washer (ASTM F436) and one regular lock washer placed under heavy hex nut (ASTM A563). Embed fully threaded rods using a Type III, Class C, D, E, or F anchor adhesive. Adhesive anchor embedment depth is 8". Anchor adhesive chosen must be able to achieve a factored bond strength in tension of 2.2 kips per anchor (edge distance and spacing must be accounted for). Submit signed and sealed calculations or the manufacturer's published literature showing the proposed anchor adhesive's ability to develop this load to the Engineer for approval prior to use. Anchor installation, including hole size, drilling, and clean out, must be in accordance with Item 450, "Railing".

(6) Adjust length to accommodate edge of slab to back of rail for specific project conditions and to help plumb the vertical face of clearance sign.

(7) Hole required to drain zinc from base plate during galvanizing.

AGUIRRE & FIELDS, LP
TBPELS FIRM REGISTRATION #739

1 04-23:
-CHANGED SECTION FOR AESTHETIC PANEL CONNECTION

STATE OF TEXAS
RYAN J. WILLIAMS
110418
LICENSED PROFESSIONAL ENGINEER
4/17/2023

SHEET 2 OF 3

Texas Department of Transportation

Bridge Division Standard

BRIDGE MOUNTED CLEARANCE SIGN ASSEMBLY

BMCS (MOD)

FILE: bmcsste1-19.dgn	DN: TxDOT	CK: TxDOT	DW: TxDOT	CK: TxDOT
©TxDOT April 2019 REVISIONS	CONT	SECT	JOB	HIGHWAY
				WYM SPR
	DIST	COUNTY		SHEET NO.
		WILLIAMSON		320

DISCLAIMER:
The use of this standard is governed by the "Texas Engineering Practice Act". No warranty of any kind is made by TxDOT for any purpose whatsoever. TxDOT assumes no responsibility for the conversion of this standard to other formats or for incorrect results or damages resulting from its use.

DATE: 3/30/2023 6:50:11 PM
FILE: c:\pw-of\pw-of-prod\quan.haaguirre-fields.com\d0226434\BMCS(MOD).dgn

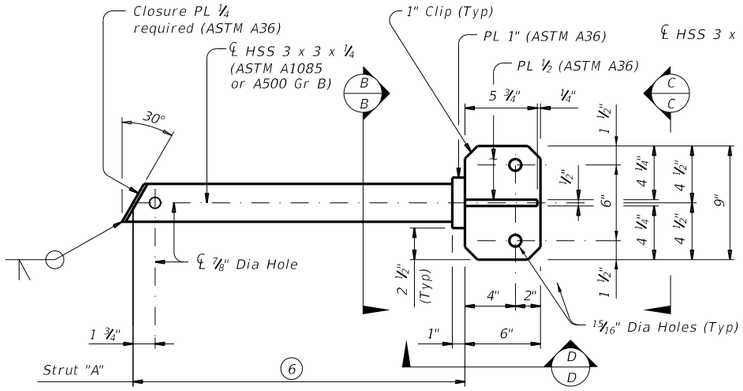

FOR T1F, T2P, C2P, T1W, C1W, T66 AND C66 RAIL TYPES

UPPER STRUT DETAIL FOR (TYPE S MOUNT)

(Used for skews over 30°)

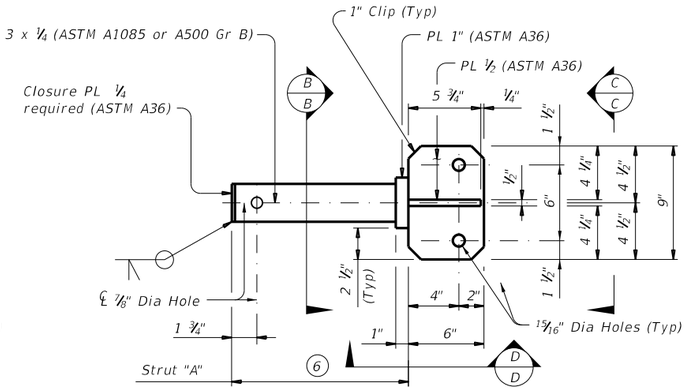

FOR T1F, T2P, C2P, T1W, C1W, T66 AND C66 RAIL TYPES

UPPER STRUT DETAIL FOR (TYPE N MOUNT)

(Used for 0° to 30° skews)

(2) ℄ ⅞" Dia x 2" Hexagon socket button head cap screws (ASTM A574) with hex nuts. Attach hex nuts to L 3 x 3 x ½ by tack welding in two places. Threads must have Class 3A fit tolerance in accordance ASME B1.1. Six screws required.

(3) At the Contractor's option fully threaded adhesive anchors may be use instead of cast-in-place anchor bolts. Expansion anchors are not allowed. Provide adhesive anchors that are ¾" Dia ASTM A193 Gr B7 or F1554 Gr 105 fully threaded rods with one hardened steel washer (ASTM F436) and one regular lock washer placed under heavy hex nut (ASTM A563). Embed fully threaded rods using a Type III, Class C, D, E, or F anchor adhesive. Adhesive anchor embedment depth is 8". Anchor adhesive chosen must be able to achieve a factored bond strength in tension of 2.2 kips per anchor (edge distance and spacing must be accounted for). Submit signed and sealed calculations or the manufacturer's published literature showing the proposed anchor adhesive's ability to develop this load to the Engineer for approval prior to use. Anchor installation, including hole size, drilling, and clean out, must be in accordance with Item 450, "Railing".

(4) For decked slab beams topped with a 2 course surface treatment and ACP overlay.

(6) Adjust length to accommodate edge of slab to back of rail for specific project conditions and to help plumb the vertical face of clearance sign.

(8) Hole required in bottom of HSS to drain zinc during galvanizing.

(9) 11" curb is for structures with 2" ACP overlay.

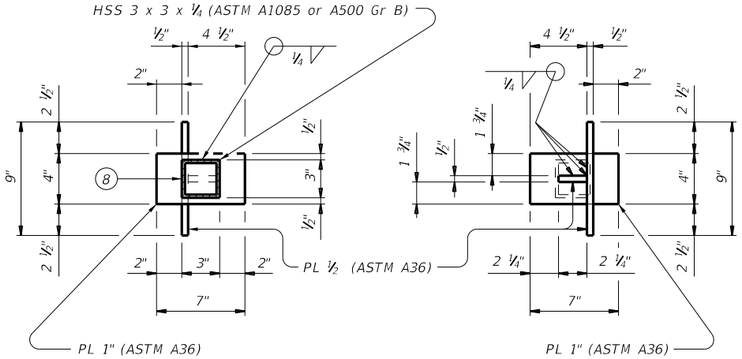

FOR 9" HIGH CURBS

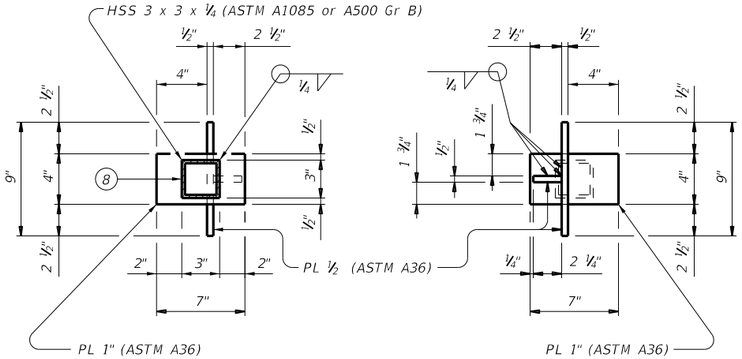

FOR 11" HIGH CURBS

SECTION B-B

FOR 9" HIGH CURBS

VIEW C-C

FOR 11" HIGH CURBS

VIEW D-D

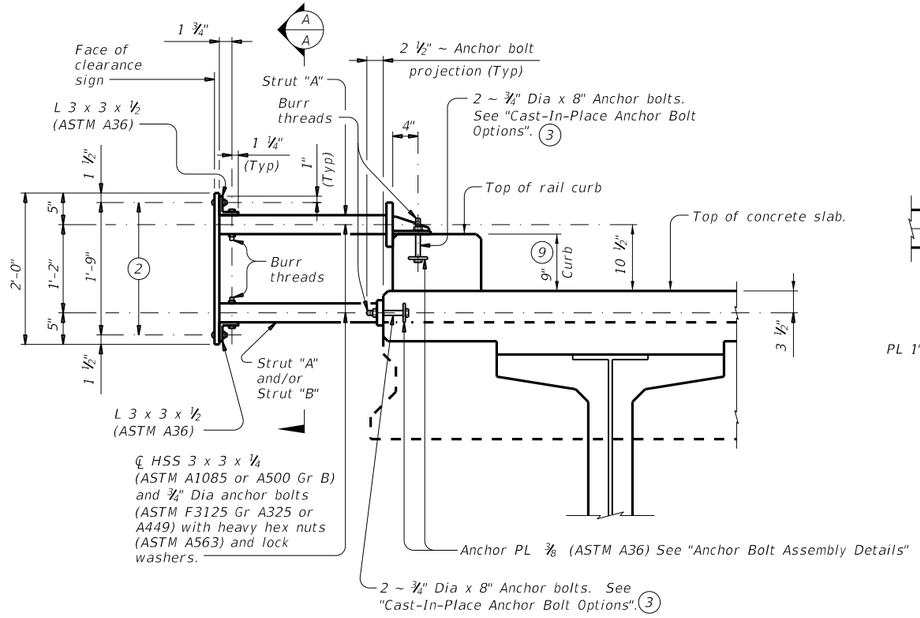

SECTION THRU T1F, T2P, C2P, T1W, C1W, T66 AND C66 RAIL CURB

Showing sign mount on a 9" high curb, 11" high curb similar.

AGUIRRE & FIELDS, LP
TBPELS FIRM REGISTRATION #739

1 04-23:
-CHANGED SECTION FOR AESTHETIC PANEL CONNECTION

STATE OF TEXAS
RYAN J. WILLIAMS
110418
LICENSED
PROFESSIONAL ENGINEER
4/17/2023

SHEET 3 OF 3

Texas Department of Transportation

Bridge Division Standard

BRIDGE MOUNTED CLEARANCE SIGN ASSEMBLY

BMCS (MOD)

FILE: bmcsste1-19.dgn	DN: TxDOT	CK: TxDOT	DW: TxDOT	CK: TxDOT
©TxDOT April 2019	CONT	SECT	JOB	HIGHWAY
REVISIONS				WYM SPR
	DIST	COUNTY		SHEET NO.
		WILLIAMSON		321

DISCLAIMER:
The use of this standard is governed by the "Texas Engineering Practice Act". No warranty of any kind is made by TxDOT for any purpose whatsoever. TxDOT assumes no responsibility for the conversion of this standard to other formats or for incorrect results or damages resulting from its use.

DATE: 3/30/2023 6:50:26 PM
FILE: c:\pw-df\pw-df-prod\gun.haeguirre-fields.com\d0226434\FD(MOD).dgn

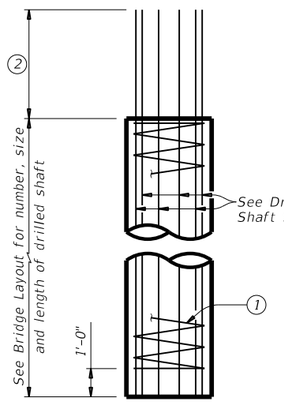

ABUTMENTS, WINGWALLS AND MULTI-DRILLED SHAFT FOOTINGS

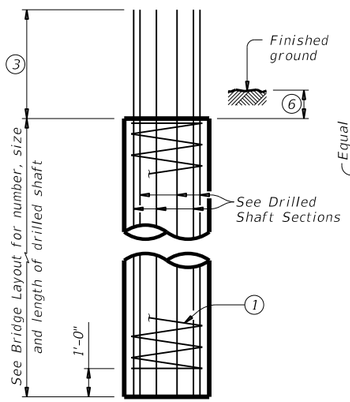

INTERIOR BENTS DRILLED SHAFT DIA EQUAL TO COLUMN DIA

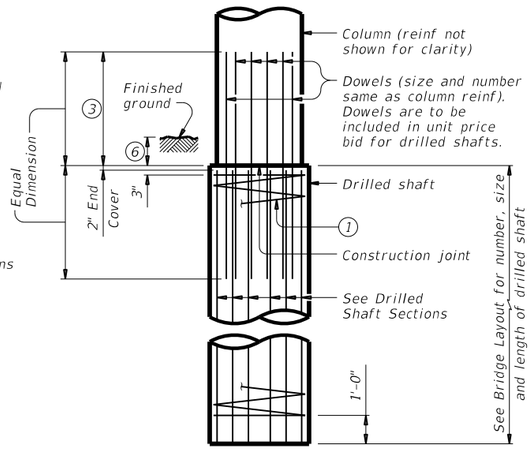

INTERIOR BENTS DRILLED SHAFT DIA GREATER THAN COLUMN DIA

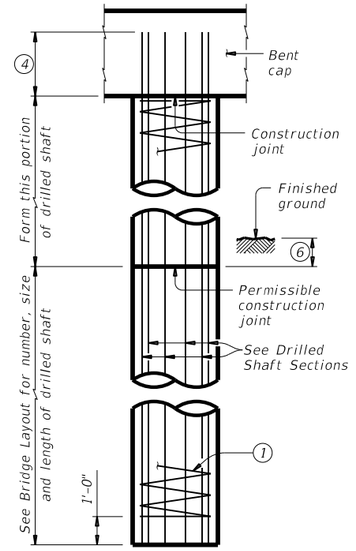

OPTIONAL INTERIOR BENT DRILLED SHAFT DETAIL (5)

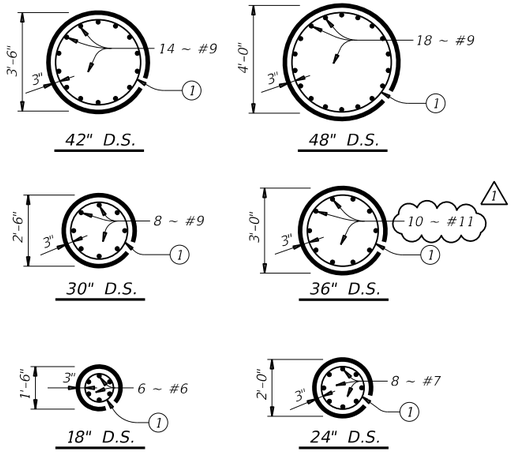

DRILLED SHAFT SECTIONS

DRILLED SHAFT DETAILS

TABLE OF PILE EMBEDMENT	
Pile Type	Embedment Depth (Ft)
16" Sq Concrete 18" Sq Concrete HP14 Steel HP16 Steel	1'-0"
20" Sq Concrete 24" Sq Concrete HP18 Steel	1'-6"

See Prestressed Concrete Piling (CP) standard for additional details on concrete pile embedment.

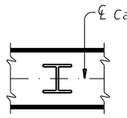

ORIENTATION OF STEEL H-PILING

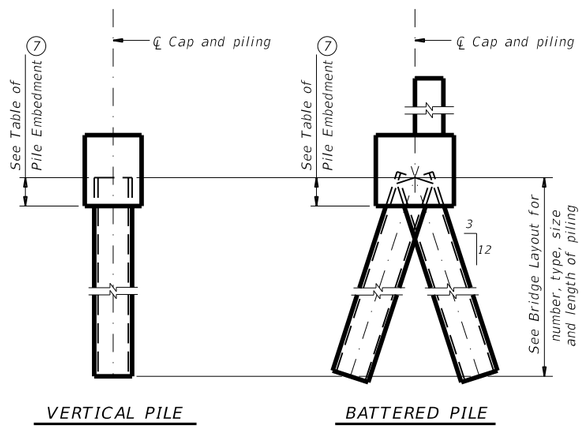

PILING DETAILS
(Concrete or steel H)

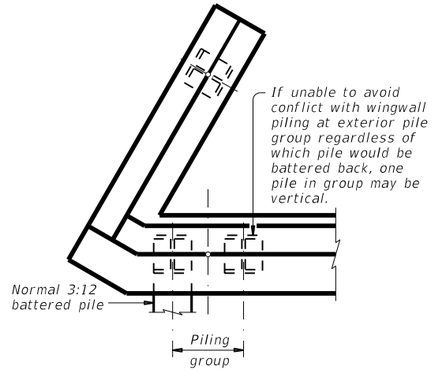

DETAIL "A"
(Showing plan view of a 30° skewed abutment)

1 #3 spiral at 6" pitch (one and a half flat turns top and bottom).

1 2 Min extension into supported element:
#6 Bars = 1'-11"
#7 Bars = 2'-0"
#9 Bars = 2'-3"
#11 Bars = 2'-3"

3 Min lap with column reinf:
#7 Bars = 2'-11"
#9 Bars = 3'-9"
#11 Bars = 4'-8"

4 Min extension into supported element:
#6 Bars = 1'-11"
#7 Bars = 2'-3"
#9 Bars = 2'-9"

5 Drilled shafts may extend to the bottom of bent caps for "H" heights of 6 ft and less (as shown on the Bridge Layout), if approved. This option can only be used when the drilled shaft diameter equals the column diameter. Obtain approval of the forming method above the ground line prior to construction. No adjustments in payment will be made if this option is used.

6 1'-0" Min, unless shown otherwise on plans.

7 Or as shown on plans.

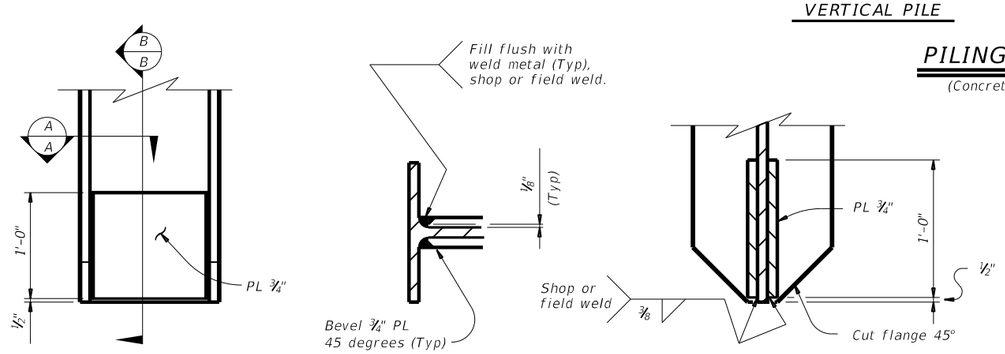

STEEL H-PILE TIP REINFORCEMENT
See Item 407 "Steel Piling" to determine when tip reinforcement is required and for options to the details shown.

STEEL H-PILE SPLICE DETAIL
Use when required.

AGUIRRE & FIELDS, LP
TBPELS FIRM REGISTRATION #739

1 04-23:
-CHANGED 36" D.S. TO #11
-ADDED #11 BAR MIN EXTENSION
-ADDED #11 BAR LAP

STATE OF TEXAS
RYAN J. WILLIAMS
110418
LICENSED PROFESSIONAL ENGINEER
4/17/2023

SHEET 1 OF 2

Texas Department of Transportation
Bridge Division Standard

COMMON FOUNDATION DETAILS

FD (MOD)

FILE: fdstde01-20.dgn	DN: TxDOT	CK: TxDOT	DW: TxDOT	CK: TxDOT
©TxDOT April 2019	CONT	SECT	JOB	HIGHWAY
REVISIONS				WYM SPR
01-20: Added #11 bars to the FD bars.	DIST	COUNTY		SHEET NO.
		WILLIAMSON		322

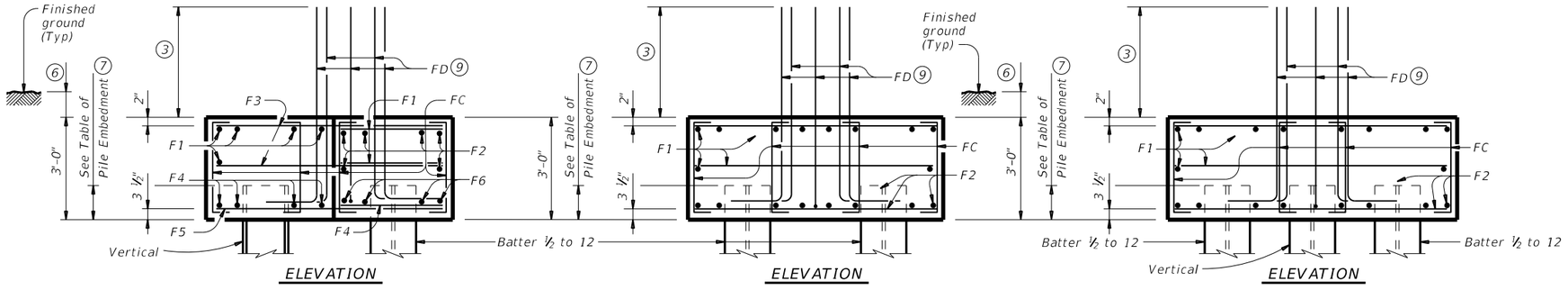

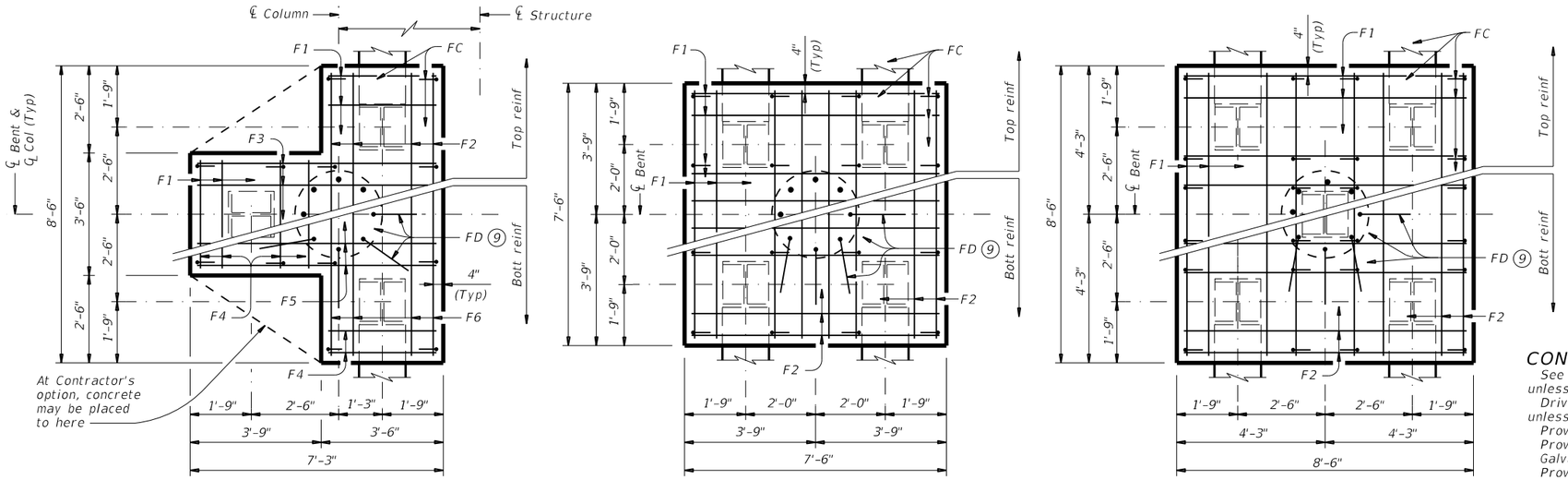

THREE PILE FOOTING (8)

For 36" Dia and smaller columns.

FOUR PILE FOOTING (8)

For 42" Dia and smaller columns.

FIVE PILE FOOTING (8)

For 42" Dia and smaller columns.

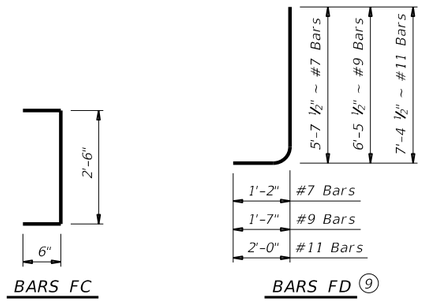

(3) Min lap with column reinforcing:
#7 Bars = 2'-11"
#9 Bars = 3'-9"
#11 Bars = 4'-8"

(6) 1'-0" Min, unless shown otherwise on plans.

(7) Or as shown on plans.

(8) See Bridge Layout for type, size and length of piling.

(9) Number and size of FD bars must match column reinforcing. Tie FD bars to the top of the bottom reinforcing mat.

(10) Adjust FD quantity, size and weight as needed to match column reinforcing.

TABLE OF FOOTING QUANTITIES FOR 30" COLUMNS

ONE 3 PILE FOOTING

Bar	No.	Size	Length	Weight
F1	11	#4	3'- 2"	23
F2	6	#4	8'- 2"	33
F3	6	#4	6'- 11"	28
F4	8	#9	3'- 2"	86
F5	4	#9	6'- 11"	94
F6	4	#9	8'- 2"	111
FC	12	#4	3'- 6"	28
FD (10)	8	#9	8'- 1"	220
Reinforcing Steel			Lb	623
Class "C" Concrete			CY	4.8

ONE 4 PILE FOOTING

Bar	No.	Size	Length	Weight
F1	20	#4	7'- 2"	96
F2	16	#8	7'- 2"	306
FC	16	#4	3'- 6"	37
FD (10)	8	#9	8'- 1"	220
Reinforcing Steel			Lb	659
Class "C" Concrete			CY	6.3

ONE 5 PILE FOOTING

Bar	No.	Size	Length	Weight
F1	20	#4	8'- 2"	109
F2	16	#9	8'- 2"	444
FC	24	#4	3'- 6"	56
FD (10)	8	#9	8'- 1"	220
Reinforcing Steel			Lb	829
Class "C" Concrete			CY	8.0

CONSTRUCTION NOTES:

See Bridge Layout for foundation type required. Use these foundation details unless shown otherwise.

Drive piling under abutment wingwalls to a minimum resistance of 10 Tons/Pile unless shown otherwise.

Provide Class C Concrete (f'c = 3,600 psi), unless shown otherwise.

Provide Grade 60 reinforcing steel.

Galvanize reinforcing if shown elsewhere in the plans.

Provide bar laps for drilled shaft reinforcing, where required, as follows:

Uncoated or galvanized (#6) ~ 2'-6"
Uncoated or galvanized (#7) ~ 2'-11"
Uncoated or galvanized (#9) ~ 3'-9"
1 Uncoated or galvanized (#11) ~ 4'-8"

GENERAL NOTES:

Designed according to AASHTO LRFD Bridge Design Specifications.

Cover dimensions are clear dimensions, unless noted otherwise.
Reinforcing bar dimensions shown are out-to-out of bar.

DESIGNER NOTES:

Do not use the drilled shaft details shown on this standard for retaining wall, noise wall, barrier, or sign foundations without structural evaluation.

Do not use the footings shown on this standard in direct contact with salt water or exposed to salt water spray.

Maximum allowable pile loads for the footings shown are:

72 Tons/Pile with 24" Dia Columns
80 Tons/Pile with 30" Dia Columns
100 Tons/Pile with 36" Dia Columns
120 Tons/Pile with 42" Dia Columns

AGUIRRE & FIELDS, LP
TBPELS FIRM REGISTRATION #739

1 04-23:
-CHANGED 36" D.S. TO #11
-ADDED #11 BAR MIN EXTENSION
-ADDED #11 BAR LAP



Texas Department of Transportation

Bridge Division Standard

COMMON FOUNDATION DETAILS

FD (MOD)

FILE: fdstde01-20.dgn	DN: TxDOT	CK: TxDOT	DW: TxDOT	CK: TxDOT
©TxDOT April 2019	CONT	SECT	JOB	HIGHWAY
REVISIONS				WYM SPR
01-20: Added #11 bars to the FD bars.	DIST	COUNTY		SHEET NO.
		WILLIAMSON		323

DISCLAIMER:
The use of this standard is governed by the "Texas Engineering Practice Act". No warranty of any kind is made by TxDOT for any purpose whatsoever. TxDOT assumes no responsibility for the conversion of this standard to other formats or for incorrect results or damages resulting from its use.

DATE: 3/30/2023 6:50:27 PM
FILE: c:\pw-of\pw-of-prod\quan.ha@aguirre-fields.com\d0226434\FD(MOD).dgn

DISCLAIMER:
The use of this standard is governed by the "Texas Engineering Practice Act". No warranty of any kind is made by TxDOT for any purpose whatsoever. TxDOT assumes no responsibility for the conversion of this standard to other formats or for incorrect results or damages resulting from its use.

DATE: 3/30/2023 6:50:44 PM
FILE: c:\pw-of\pw-of-prod\quan.ha@aguirre-fields.com\d0226434\1GEB(MOD).dgn

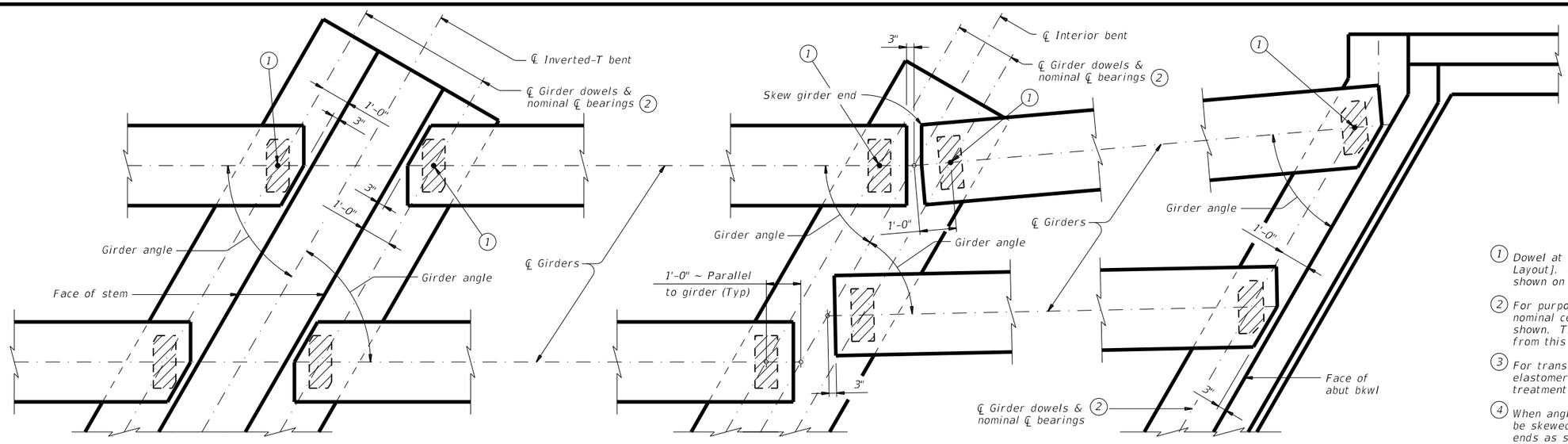

AT INVERTED-T BENT W/SKEW

AT CONVENTIONAL INTERIOR BENT W/SKEW

AT ABUTMENT W/SKEW (3)

(1) Dowel at doweled girder end [labeled (D) on Bridge Layout]. Required for outside girder only or as shown on substructure details.

(2) For purposes of computing bearing seat elevations, nominal centerline of bearing must be defined as shown. The actual center of bearing pad may vary from this line.

(3) For transition bents with backwall, girder and elastomeric bearings must receive the same treatment as shown for abutments.

(4) When angle exceeds 0°, one or both girders ends must be skewed to maintain the clearance between girder ends as shown in view.

(5) See Table of Bearing Pad Dimensions for bearing size. Girder end skew angles in Table not applicable for this situation. Table reflects girder conflicts of this type on radial bents only.

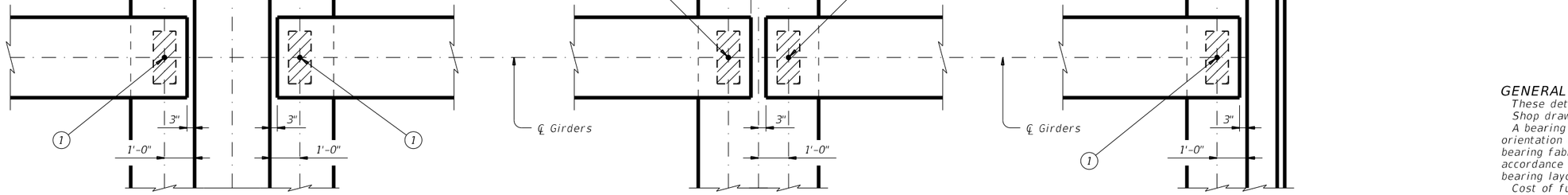

AT INVERTED-T BENT

AT CONVENTIONAL INTERIOR BENT

AT ABUTMENT (3)

GIRDER END DETAILS

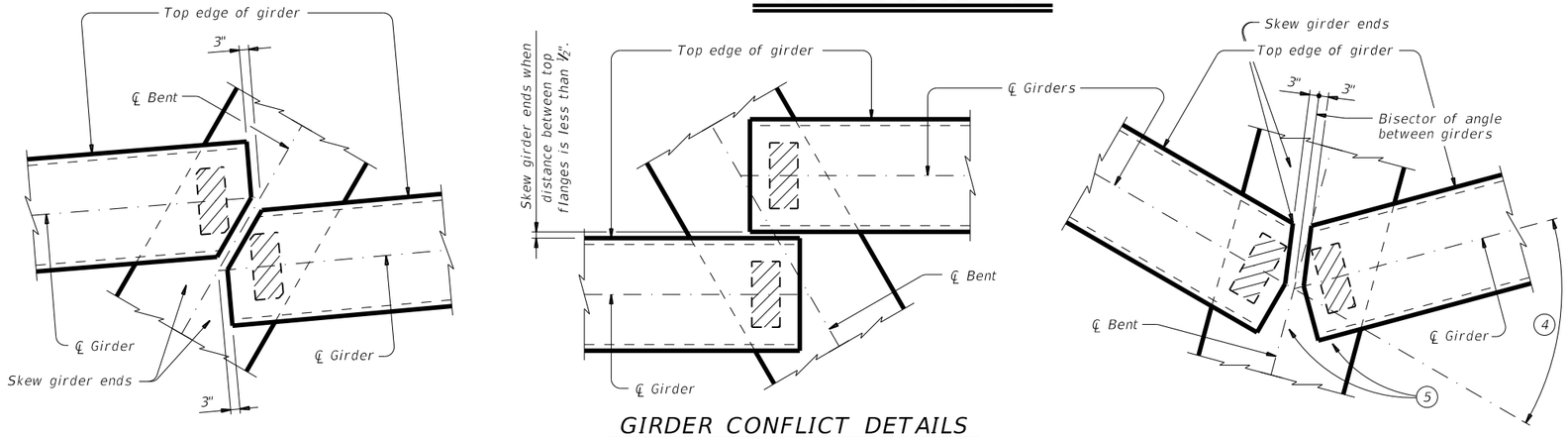

GIRDER CONFLICT DETAILS

GENERAL NOTES:
These details accommodate skew angles up to 60°.
Shop drawings for approval are required.
A bearing layout which identifies location and orientation of all bearings must be developed by the bearing fabricator. Permanently mark each bearing in accordance with the bearing layout. A copy of the bearing layout is to be provided to the Engineer.
Cost of furnishing and installing elastomeric bearings, including beveled and embedded steel plates, must be included in unit price bid for "Prestressed Concrete Girders".

AGUIRRE & FIELDS, LP
TBPELS FIRM REGISTRATION #739

1 04-23:
-ADDED TABLE OF BEARING PAD THICKNESS
-ADDED CIRCLE NOTE 17
-REVISED PAD ELEVATION DIMENSIONS

STATE OF TEXAS
RYAN J. WILLIAMS
110418
LICENSED PROFESSIONAL ENGINEER
4/17/2023

HL93 LOADING SHEET 1 OF 3

Texas Department of Transportation
Bridge Division Standard

ELASTOMERIC BEARING AND GIRDER END DETAILS
PRESTR CONCRETE I-GIRDERS

IGEB (MOD)

FILE: igebsts1-17.dgn	DN: AEE	CK: JMH	DW: JTR	CK: TxDOT
©TxDOT August 2017	CONT	SECT	JOB	HIGHWAY
REVISIONS				WYM SPR
	DIST	COUNTY		SHEET NO.
		WILLIAMSON		324

DISCLAIMER:
The use of this standard is governed by the "Texas Engineering Practice Act". No warranty of any kind is made by TxDOT for any purpose whatsoever. TxDOT assumes no responsibility for the conversion of this standard to other formats or for incorrect results or damages resulting from its use.

DATE: 3/30/2023 6:50:45 PM
FILE: c:\pw-of\pw-of-prod\quan.ha@aguirre-fields.com\d0226434\IGEB(MOD).dgn

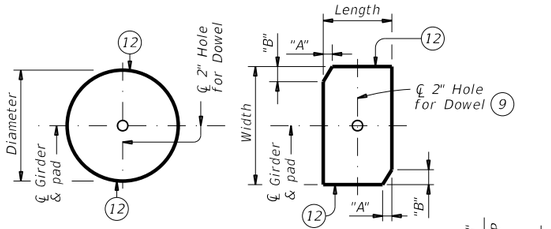

PLANS (10)

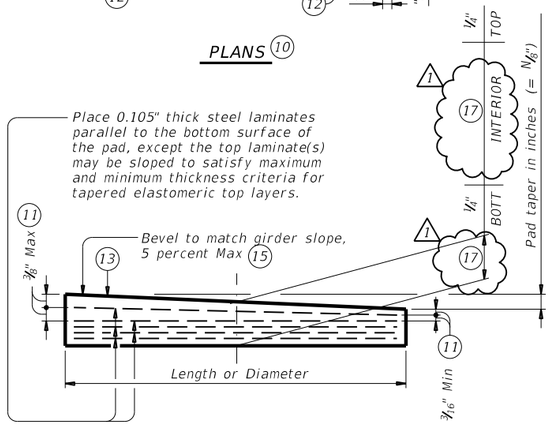

ELEVATION

LAMINATED ELASTOMERIC BEARING PAD

(50 DUROMETER)

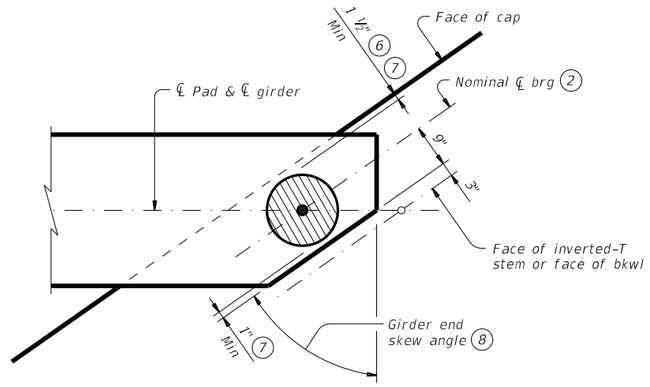

ROUND BEARINGS FOR SKEWED GIRDER ENDS AT FACE OF INVERTED-T STEM OR FACE OF BKWL

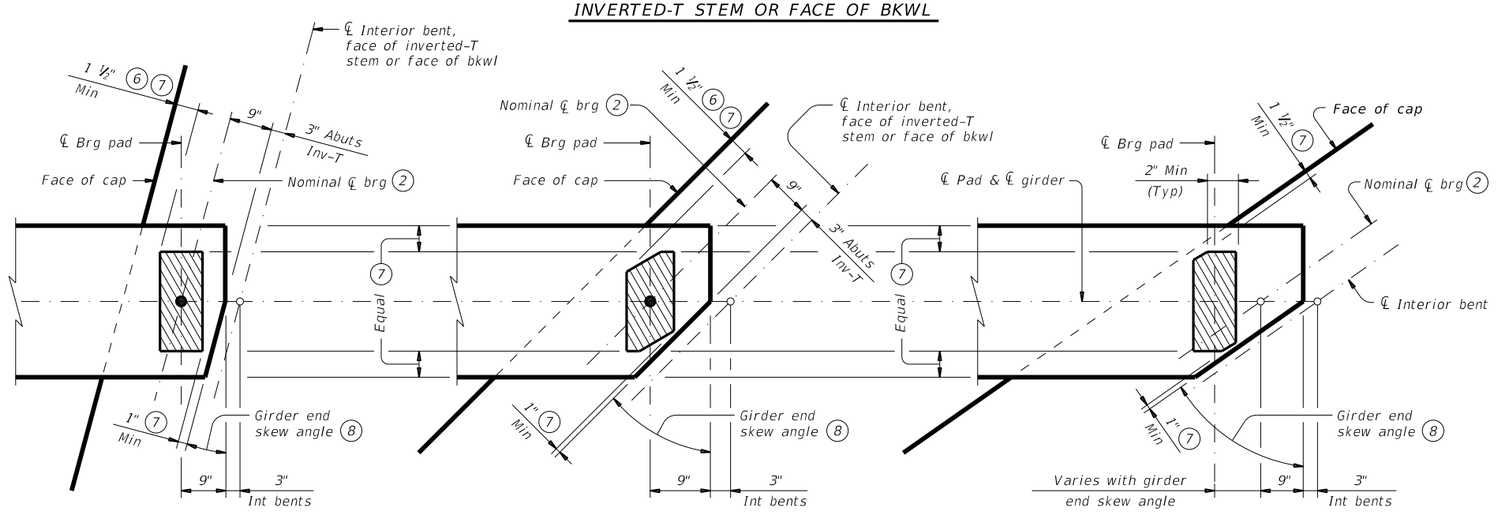

SKEWED GIRDER ENDS AT INT BENTS, FACE OF INVERTED-T STEM OR FACE OF BKWL

SKEWED GIRDER ENDS AT CONVENTIONAL INTERIOR BENTS (16)

(NO GIRDER DOWELS)

BEARING PAD PLACEMENT DIAGRAMS

TABLE OF MINIMUM SUBSTRUCTURE DIMENSIONS (14)

Girder Type	Abutments: Face of Bkwl to Face of Cap	Int Bents: Overall Cap Width	Inv-T Bents: Corbel Width
Tx28 thru Tx54	1'-9"	3'-6"	1'-10 1/2"
Tx62 & Tx70	2'-0"	4'-0"	2'-1 1/2"

1

TABLE OF BEARING PAD THICKNESS

Bridge	Abut/ Bent No.	Bearing Type	No. of Interior Layers	Pad Thickness at ℄ Brg
NB Wyoming Springs at Brushy Creek	1 & 5	G-2-"N"	6	2 3/4"
	2 - 4	G-1-"N"	6	2 3/4"
SB Wyoming Springs at Brushy Creek	1 & 5	G-2-"N"	6	2 3/4"
	2 - 4	G-1-"N"	6	2 3/4"
NB Wyoming Springs at Dry Fork Creek	1	G-4-"N"	12	4 3/4"
	2 & 3	G-1-"N"	7	3"
	4	G-3-"N"	7	3"
SB Wyoming Springs at Dry Fork Creek	1	G-4-"N"	7	3"
	2 & 3	G-1-"N"	6	2 3/4"
	4	G-3-"N"	6	2 3/4"

TABLE OF BEARING PAD DIMENSIONS

Bent Type	Girder Type	Bearing Type (13)	Girder End Skew Angle Range	Pad Size Lgth x Wdth	Pad Clip Dimensions "A"	Pad Clip Dimensions "B"
ABUTMENTS, INVERTED-T AND TRANSITION BENTS WITH BACKWALLS	Tx28,Tx34, Tx40,Tx46 & Tx54	G-1-"N"	0° thru 21°	8" x 21"	---	---
		G-2-"N"	21°+ thru 30°	8" x 21"	1 1/2"	2 1/2"
		G-3-"N"	30°+ thru 45°	9" x 21"	4 1/2"	4 1/2"
		G-4-"N"	45°+ thru 60°	15" Dia	---	---
	Tx62 & Tx70	G-5-"N"	0° thru 21°	9" x 21"	---	---
		G-6-"N"	21°+ thru 30°	9" x 21"	1 1/2"	2 1/2"
		G-7-"N"	30°+ thru 45°	10" x 21"	4 1/2"	4 1/2"
		G-8-"N"	45°+ thru 60°	10" x 21"	7 1/4"	4 1/4"
CONVENTIONAL INTERIOR BENTS	Tx28,Tx34, Tx40,Tx46 & Tx54	---	---	---	---	---
		---	---	---	---	---
		G-1-"N"	0° thru 60°	8" x 21"	---	---
	Tx62 & Tx70	G-5-"N"	0° thru 60°	9" x 21"	---	---
CONVENTIONAL INTERIOR BENTS WITH SKEWED GIRDER ENDS (GIRDER CONFLICTS) (16)	Tx28,Tx34, Tx40,Tx46 & Tx54	G-1-"N"	0° thru 18°	8" x 21"	---	---
		G-2-"N"	18°+ thru 30°	8" x 21"	1 1/2"	2 1/2"
		G-9-"N"	30°+ thru 45°	8" x 21"	3"	3"
		G-10-"N"	45°+ thru 60°	9" x 21"	6"	3 1/2"
	Tx62 & Tx70	G-5-"N"	0° thru 18°	9" x 21"	---	---
		G-5-"N"	18°+ thru 30°	9" x 21"	---	---
		G-11-"N"	30°+ thru 45°	9" x 21"	1 1/2"	1 1/2"
		G-12-"N"	45°+ thru 60°	9" x 21"	3"	1 3/4"

(2) For purposes of computing bearing seat elevations, nominal centerline of bearing must be defined as shown. The actual center of bearing pad may vary from this line.

(6) 3" for inverted-T.

(7) Place centerline pad as near nominal centerline bearing as possible between limits shown.

(8) Girder end skew angle is equal to 90° minus the girder angle except at some conflicting girders.

(9) Provide 2" dia hole only at locations required. See Substructure details for location.

(10) See Table of Bearing Pad Dimensions for dimensions.

(11) Maximum and minimum layer thicknesses shown are for elastomer only, on tapered layers.

(12) Locate Permanent Mark here.

(13) Indicate BEARING TYPE on all pads. For tapered pads, locate BEARING TYPE on the high side. The Fabricator must include the value of "N" (amount of taper in 1/8" increments) in this mark.
Examples: N=0, (for 0" taper)
N=1, (for 1/8" taper)
N=2, (for 1/4" taper)
(etc.)
Fabricated pad top surface slope must not vary from plan girder slope by more than $\left(\frac{0.0625"}{\text{Length or Dia}}\right)$ IN/IN.

(14) Substructure dimensions must satisfy the minimums provided to accommodate the elastomeric bearings shown on this standard.

(15) See sheet 3 of 3 for beveled plate use when slopes exceed 5 percent.

(16) If girder end is skewed for a girder conflict at an interior bent and a beveled sole plate is required, use bearing type for abutments at this location. Location of bearing centerline is to be set as for abutments in this case.

1 (17) Elastomer thickness. Each layer 1/4" thick. Number of layers varies. See Table of Bearing Pad Thickness for number of layers and pad thickness at ℄ bearing.

HL93 LOADING SHEET 2 OF 3

AGUIRRE & FIELDS, LP
TBPELS FIRM REGISTRATION #739

1 04-23:
-ADDED TABLE OF BEARING PAD THICKNESS
-ADDED CIRCLE NOTE 17
-REVISED PAD ELEVATION DIMENSIONS

STATE OF TEXAS
RYAN J. WILLIAMS
110418
LICENSED PROFESSIONAL ENGINEER
4/17/2023

Texas Department of Transportation

Bridge Division Standard

ELASTOMERIC BEARING AND GIRDER END DETAILS

PRESTR CONCRETE I-GIRDERS

IGEB (MOD)

FILE: igebsts1-17.dgn	DN: AEE	CK: JMH	DW: JTR	CK: TxDOT
©TxDOT August 2017	CONT	SECT	JOB	HIGHWAY
REVISIONS				WYM SPR
	DIST	COUNTY		SHEET NO.
		WILLIAMSON		325

DISCLAIMER:
The use of this standard is governed by the "Texas Engineering Practice Act". No warranty of any kind is made by TxDOT for any purpose whatsoever. TxDOT assumes no responsibility for the conversion of this standard to other formats or for incorrect results or damages resulting from its use.

DATE: 3/30/2023 6:50:45 PM
FILE: c:\pw-df\pw-df-prod\gun.haeguirre-fields.com\d0226434\IGEB(MOD).dgn

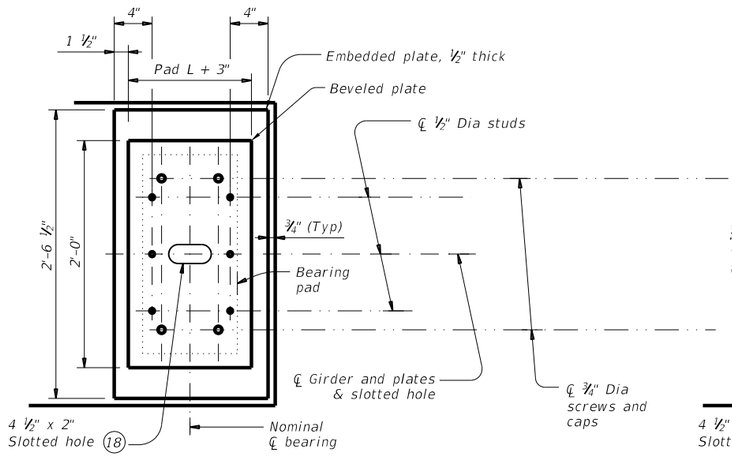

NORMAL GIRDER END
RECTANGULAR BEARING PAD

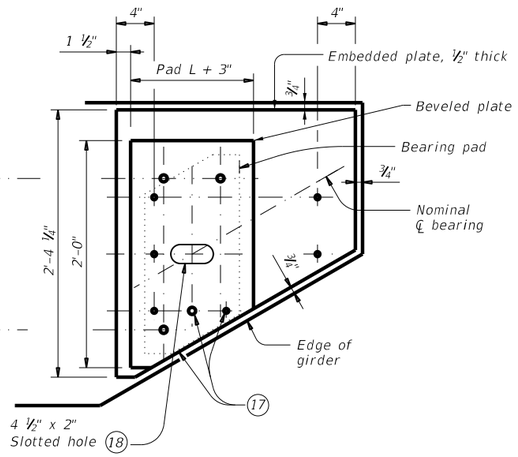

SKEWED GIRDER END
CLIPPED RECTANGULAR BEARING PAD

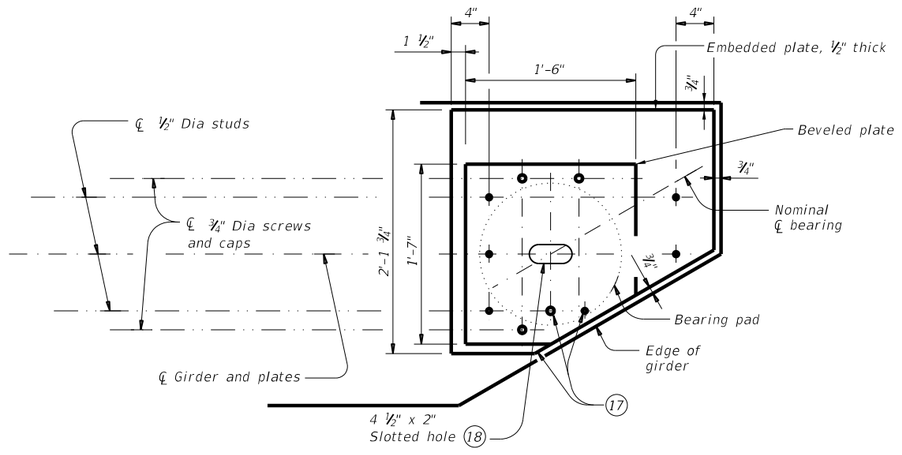

SKEWED GIRDER END
15" DIA BEARING PAD

PLAN VIEW OF SOLE PLATE DETAILS

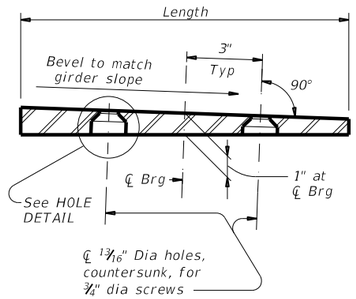

SECTION

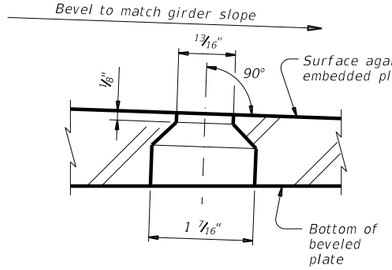

HOLE DETAIL

BEVELED PLATE DETAILS

(17) Cut beveled and embedded plates to match girder end skew. Adjust location of screw and stud as shown when necessary.

(18) Slotted hole is required at doweled girder end locations.

SOLE PLATE NOTES:

Provide constant thickness elastomeric bearings with beveled and embedded steel sole plates in accordance with these details when the girder slope exceeds 5 percent or if otherwise required in the plans. Provide for all girders in the span.

On the shop drawings, dimension sole plates to the nearest 1⁄16" based on required thickness at centerline of bearing and slope of girder. Thickness tolerance variation from the approved shop drawings is 1⁄16"+/-, except variation from a plane parallel to the theoretical top surface can not exceed 1⁄16" total. Bearing surface tolerances listed in Item 424 apply to embedded and beveled plates.

Steel plate must conform to ASTM A36, A572 Gr 50, or A709 Gr 36 or Gr 50. Hot dip galvanize both the embedded plate and beveled sole plate after fabrication. Seal weld caps to embedded plate before galvanizing.

When determining if relocation of screw holes and studs are necessary for skewed girder ends, minimum clearance from screw or stud centerline to plate edge is 1.25".

Tap threads in the embedded plate only. Drill and tap prior to galvanizing.

¾" Dia screws must be electroplated, socket flat head countersunk cap screws conforming to ASTM F835. Electroplating must conform to ASTM B633, SC 2, Type I. Provide screws long enough to maintain a ¾" minimum embedment into the embedded plate and galvanized cap. Provide galvanized steel caps (16 ga Min) with a nominal 1" inside diameter and deep enough to accommodate the screws, but not less than ½" deep or deeper than 1".

Install beveled sole plates prior to shipping girders. Installed screw heads must not protrude below the bottom of the beveled plate.

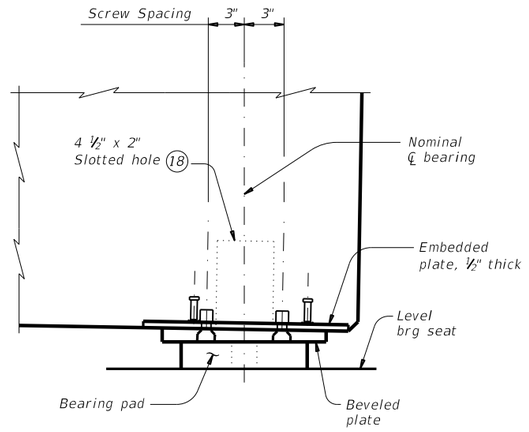

SIDE ELEVATION

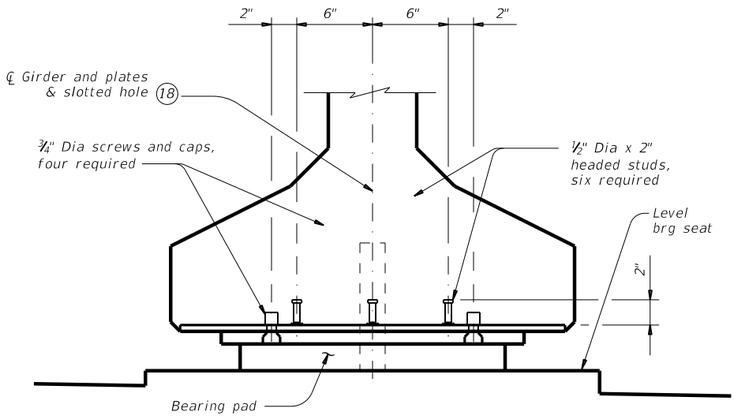

END ELEVATION
Showing normal girder end.

GIRDER DETAILS

HL93 LOADING SHEET 3 OF 3

AGUIRRE & FIELDS, LP
TBPELS FIRM REGISTRATION #739

1 04-23:
-ADDED TABLE OF BEARING PAD THICKNESS
-ADDED CIRCLE NOTE 17
-REVISED PAD ELEVATION DIMENSIONS

STATE OF TEXAS
RYAN J. WILLIAMS
110418
LICENSED PROFESSIONAL ENGINEER
4/17/2023

Texas Department of Transportation
Bridge Division Standard

ELASTOMERIC BEARING AND GIRDER END DETAILS
PRESTR CONCRETE I-GIRDERS

IGEB (MOD)

FILE: igebsts1-17.dgn	DN: AEE	CK: JMH	DW: JTR	CK: TxDOT
©TxDOT August 2017	CONT	SECT	JOB	HIGHWAY
REVISIONS				WYM SPR
	DIST	COUNTY		SHEET NO.
		WILLIAMSON		326

DISCLAIMER:
The use of this standard is governed by the "Texas Engineering Practice Act". No warranty of any kind is made by TxDOT for any purpose whatsoever. TxDOT assumes no responsibility for the conversion of this standard to other formats or for incorrect results or damages resulting from its use.

DATE: 3/30/2023 6:51:03 PM
FILE: c:\pw-df\pw-df-prod\juan.haeguirre-fields.com\d0226434\BL.dgn

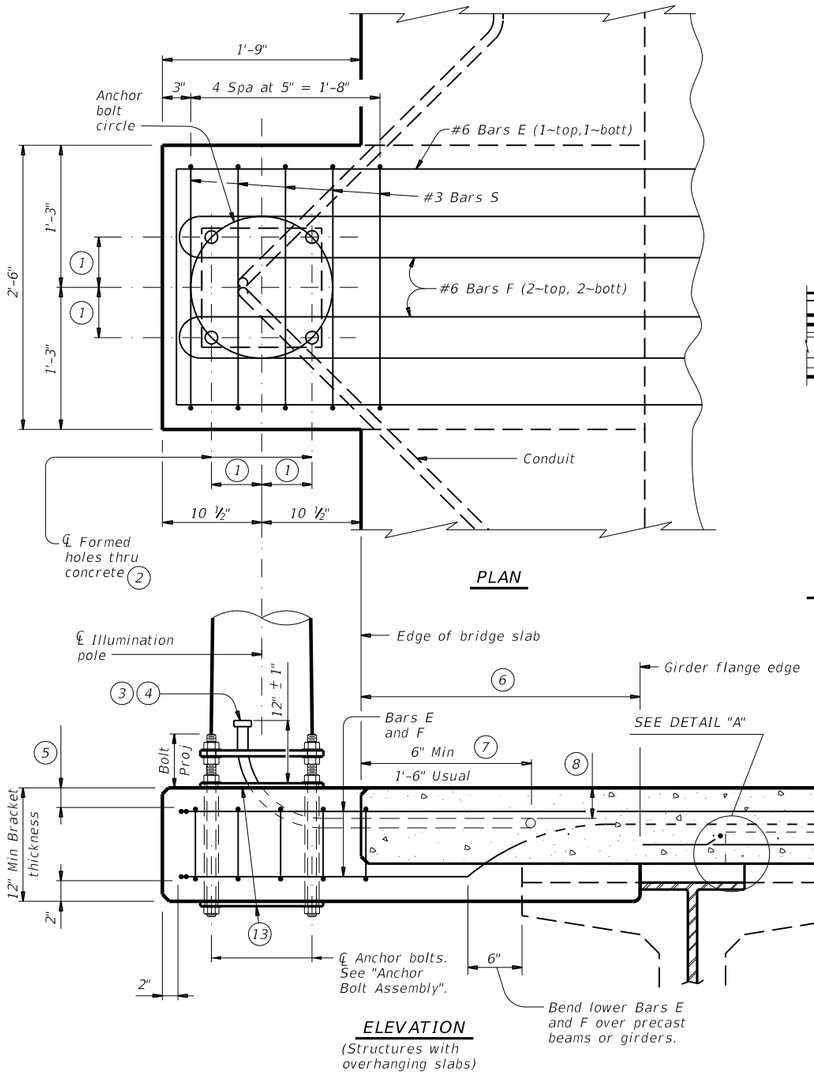

PLAN

ELEVATION
(Structures with overhanging slabs)

ILLUMINATION POLE BRACKET LOCATION AND REINFORCING

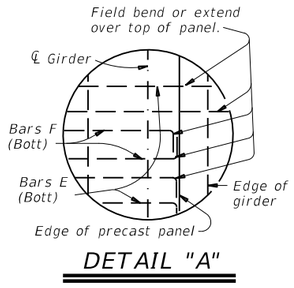

DETAIL "A"

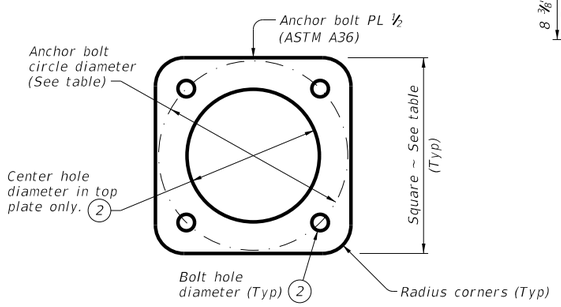

ANCHOR BOLT PLATE

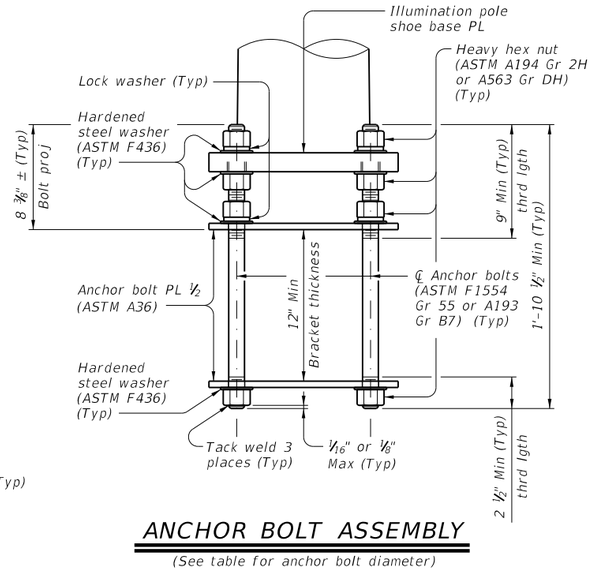

ANCHOR BOLT ASSEMBLY
(See table for anchor bolt diameter)

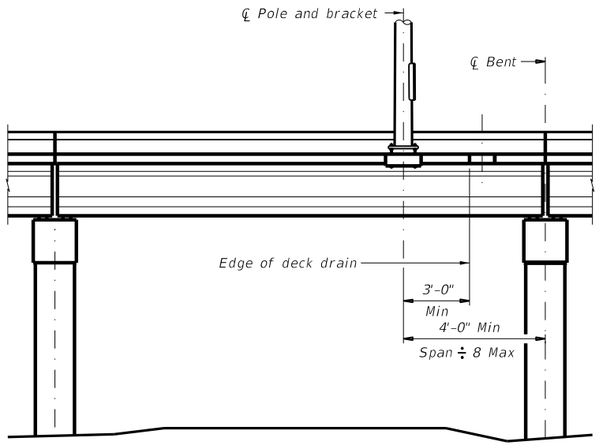

TYPICAL BRIDGE ELEVATION

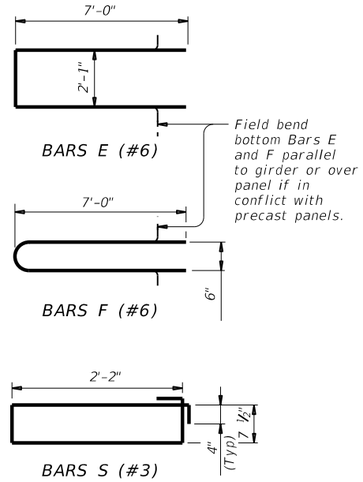

TABLE OF ANCHOR BOLT AND ANCHOR BOLT PLATE INFORMATION

ANCHOR BOLT CIRCLE DIAMETER	ANCHOR BOLT OFFSET	ANCHOR BOLT DIAMETER	ANCHOR BOLT HOLE SIZE		TOP AND BOTTOM ANCHOR BOLT PLATE SIZE	CENTER HOLE DIAMETER IN TOP ANCHOR BOLT PLATE
			CONCRETE	STEEL		
IN	IN	IN	IN	IN	IN	IN
13	4 ⅝	1	1 ¼	1 ¼	PL ½ X 13 X 1'-1"	9 ½
15	5 5/16	1 ¼	1 ½	1 ½	PL ½ X 15 ½ X 1'-3 ½"	10 ½

ESTIMATED QUANTITIES~ONE BRACKET

ITEM		UNIT	QUANT
CONCRETE	(9) (10)	CY	0.2
REINFORCING STEEL	(10)	LB	146
STRUCTURAL STEEL	(10) (11)	LB	112
CONDUIT	(12)	LF	4

(1) See table for anchor bolt offset dimension.
(2) See table for hole diameter size.
(3) If lighting is to be placed on future contract, extend conduit only 6" and provide water tight cap.
(4) Ream burrs and install bell ends or bushings on all conduit ends.
(5) Provide same clear cover required for bridge slab. Place Bars E and F beneath top slab reinforcing only if necessary to provide this cover.
(6) If slab edge to girder flange edge exceeds 3'-11", lengthen Bars E and F proportionally to ensure Bars E and F extend 1'-6" Min beyond girder flange edge.
(7) Clear rail anchors, drains, etc 1 ½" Min.
(8) 1 ½" Min cover and always beneath top layer slab reinforcing.
(9) Variation due to slab thickness is insignificant.
(10) For Contractor's information only.
(11) Anchor bolts, nuts, washers, and 2 plates. Verify anchor bolt lengths prior to ordering.
(12) Additional to main run (size and type as shown elsewhere on the plans).
(13) See "Anchor Bolt Assembly", "Anchor Bolt Plate", and table for anchor bolt, and anchor bolt plate information.

MATERIAL NOTES:

Galvanize anchor bolts, nuts, washers, and anchor bolt plates. Repair galvanizing damage from tack welding per Item 445, "Galvanizing".

Provide Grade 60 reinforcing steel.

Epoxy coat or galvanize all reinforcing steel if slab bars are epoxy coated or galvanized.

Concrete for Illumination Pole Brackets must be of the same type and placed monolithically with the bridge slab. The bracket quantity is considered subsidiary to the Item "Reinforced Concrete Slab".

GENERAL NOTES:

Designed for up to 50 ft light pole with one 12 ft arm, 60 lb luminaire with 1.6 sq ft EPA at maximum design wind speed of 110 mph (3 second gusts). A special design is required if luminaire mounting height exceeds 100 ft above average surrounding terrain.

The anchor bolts, nuts, washers, and anchor bolt plates are subsidiary to the Item "Roadway Illumination Assemblies".

The type and size of conduit, the anchor bolt circle diameter, and the number and location of brackets is shown elsewhere on the plans. Brackets found to conflict with other components of the bridge may be relocated as necessary.

See Roadway Illumination Poles standard for details and notes not shown.

Cover dimensions are clear dimensions, unless noted otherwise.
Reinforcing bar dimensions shown are out-to-out of bar.

Texas Department of Transportation

Bridge Division Standard

BRIDGE LIGHTING DETAILS

BL

FILE: blstde01-19.dgn	DN: TxDOT	CK: TxDOT	DW: TxDOT	CK: TxDOT
©TxDOT April 2019	CONT	SECT	JOB	HIGHWAY
REVISIONS				WYM SPR
	DIST	COUNTY		SHEET NO.
		WILLIAMSON		327

DISCLAIMER:
The use of this standard is governed by the "Texas Engineering Practice Act". No warranty of any kind is made by TxDOT for any purpose whatsoever. TxDOT assumes no responsibility for the conversion of this standard to other formats or for incorrect results or damages resulting from its use.

DATE: 3/30/2023 6:51:03 PM
FILE: c:\pw-of\pw-of-prod\quan.ha@aguirre-fields.com\d0226434\BL.dgn

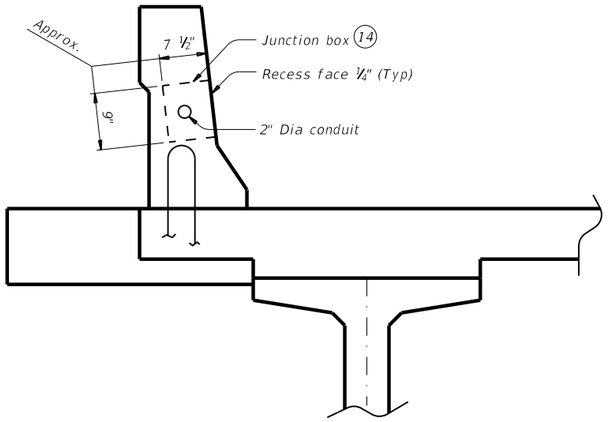

SHOWING T551, T552, AND T80HT

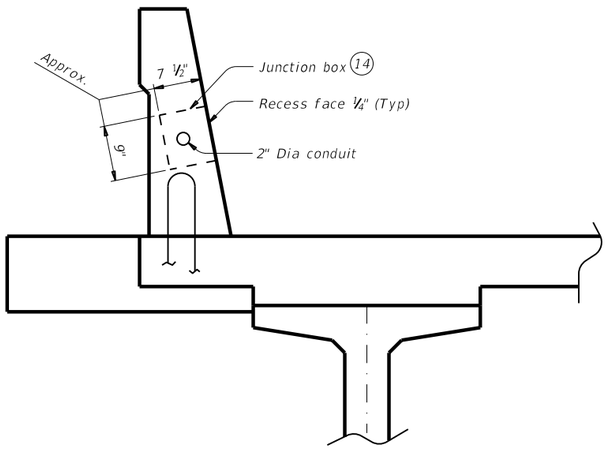

SHOWING SSTR AND T80SS

(4) Ream burrs and install bell ends or bushings on all conduit ends.

(14) Provide polymer concrete junction boxes meeting the requirements of DMS 11030.

(15) Position of conduit shown elsewhere on the plans or as directed by the Engineer.

(16) Place conduit expansion device on high side of expansion joint.

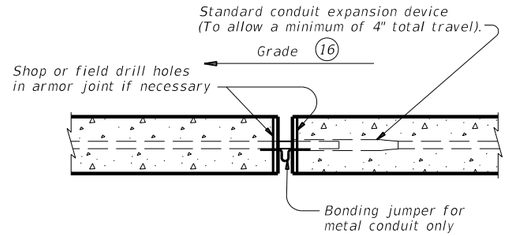

CONDUIT EXPANSION JOINT

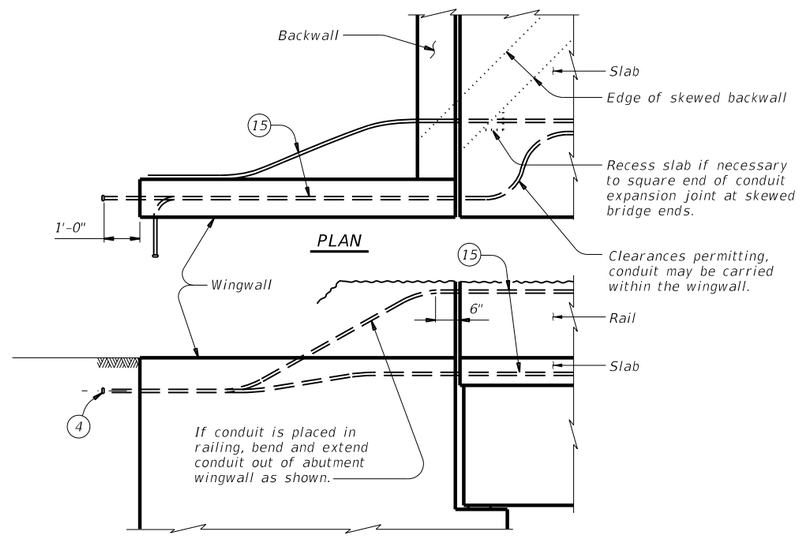

TREATMENT AT END OF BRIDGE

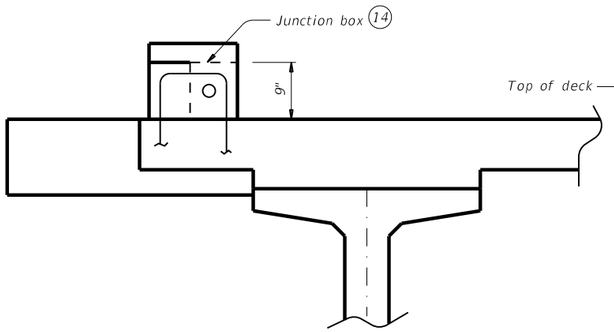

SHOWING T1F, T2P, T1W, T66, C2P, AND C1W CURB

See Elevation View for curb modifications

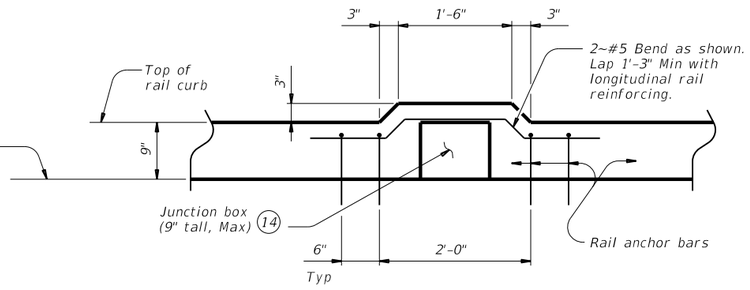

ELEVATION VIEW

For Rail Types T1F, T2P, T1W, T66, C2P, and C1W, center junction box between posts. Additional reinforcing and concrete required for this rail modification is considered subsidiary to the rail. Do not locate junction box in the same bay as a drain slot in rail curb.

JUNCTION BOX LOCATION

Use these details as a guide in locating junction boxes in rail types not shown.

Texas Department of Transportation

Bridge Division Standard

BRIDGE LIGHTING DETAILS

BL

FILE: blstde01-19.dgn	DN: TxDOT	CK: TxDOT	DW: TxDOT	CK: TxDOT
©TxDOT April 2019	CONT	SECT	JOB	HIGHWAY
REVISIONS				WYM SPR
	DIST	COUNTY		SHEET NO.
		WILLIAMSON		328

DISCLAIMER:
The use of this standard is governed by the "Texas Engineering Practice Act". No warranty of any kind is made by TxDOT for any purpose whatsoever. TxDOT assumes no responsibility for the conversion of this standard to other formats or for incorrect results or damages resulting from its use.

DATE: 3/30/2023 6:51:21 PM
FILE: c:\pw-of\pw-of-prod\quan.hd@aguirre-fields.com\d0226434\BRSM.dgn

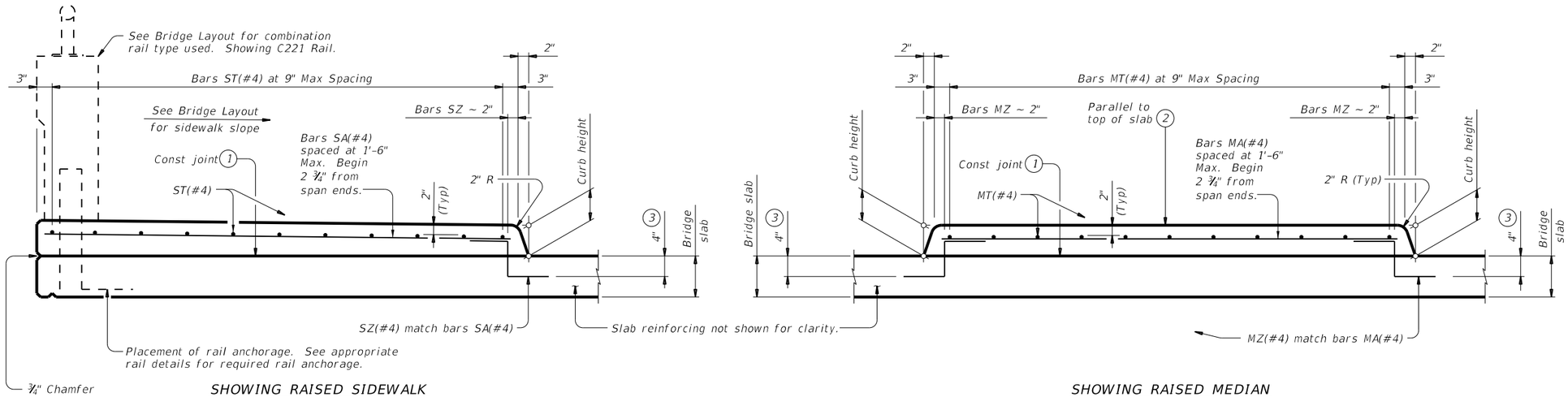

TYPICAL TRANSVERSE SECTIONS

See Span Details for dimensions not shown.

(1) Provide broom finish to top of bridge slab where raised sidewalk or raised median area is defined.

(2) Unless noted otherwise on the span details.

(3) Bars may rest on top of PCPs.

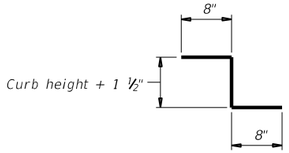

BARS SZ(#4) AND MZ(#4)

APPROVED SLIP RESISTANT PLATE	
Product	Manufacturer Website
Algrip™, Steel	www.algrip.com
Mebac® #3, Steel	www.harscoikg.com
SlipNOT® Grade 2, Steel	www.slipnot.com

Provide drain cover plates fabricated with a product from this list. No exceptions are permitted.

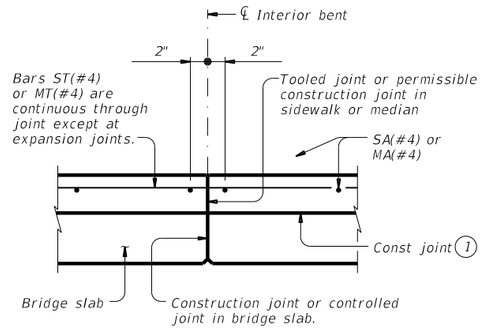

LONGITUDINAL SECTION AT INTERIOR BENT

At bents with expansion joints, provide an open joint in the sidewalk/median matching the deck's joint width.

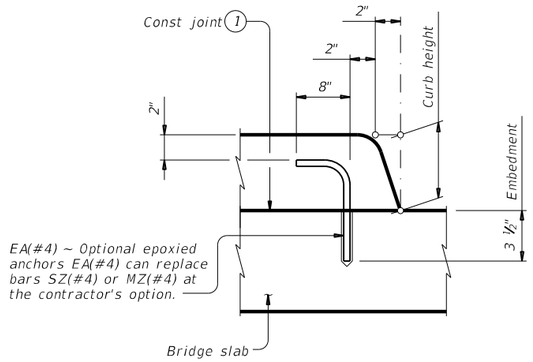

OPTIONAL EPOXY ANCHORS

Embed EA(#4) bar into concrete with a Type III (Class C, D, E, or F) epoxy meeting the requirements of DMS-6100, "Epoxies and Adhesives". Follow manufacturer's directions for installing the epoxied anchor bars.

MATERIAL NOTES:

Provide the same concrete required for the bridge deck, Class S or Class S (HPC) concrete.

Provide Grade 60 reinforcing steel. Deformed welded wire reinforcement (WWR) meeting ASTM A1064 of equivalent size and spacing may be substituted for bars SA, ST, MA, and MT.

Provide epoxy coat or galvanize reinforcement if bridge deck reinforcement is required to be epoxy coated or galvanized.

Provide hot-dip galvanize slip resistant steel plate after fabrication in accordance with Item 445, "Galvanizing".

Chamfer or round edges approximately 1/16" prior to galvanizing.

GENERAL NOTES:

Designed according to AASHTO LRFD Bridge Design Specifications.

Provide the following bar or wire lap lengths when required:
- Uncoated, 1'-7" Min
- Coated, 2'-5" Min

Submittal and approval of drain cover plate shop drawings is not required if fabrication is accordance with these details.

Raised sidewalks will be paid under Item 422 by the SF of Bridge Sidewalk or Bridge Sidewalk (HPC). Raised medians will be paid under Item 422 by the SF of Bridge Median or Bridge Median (HPC).

Payment for drain cover plates will be by the pound of "Structural Steel (Misc Non-Bridge)" as per Item 442, "Metal for Structures". Weight of one drain cover plate is 48 plf.

DESIGNER NOTES:

These details do not apply for longitudinal grades exceeding 5 percent.

Cover dimensions are clear dimensions, unless noted otherwise.

Reinforcing bar dimensions shown are out-to-out of bar.

Texas Department of Transportation

Bridge Division Standard

BRIDGE RAISED SIDEWALK AND MEDIAN DETAILS

BRSM

FILE: brsmste1-19.dgn	DN: JMH	CK: TxDOT	DW: JTR	CK: TxDOT
©TxDOT April 2019	CONT	SECT	JOB	HIGHWAY
REVISIONS				WYM SPR
	DIST	COUNTY		SHEET NO.
		WILLIAMSON		329

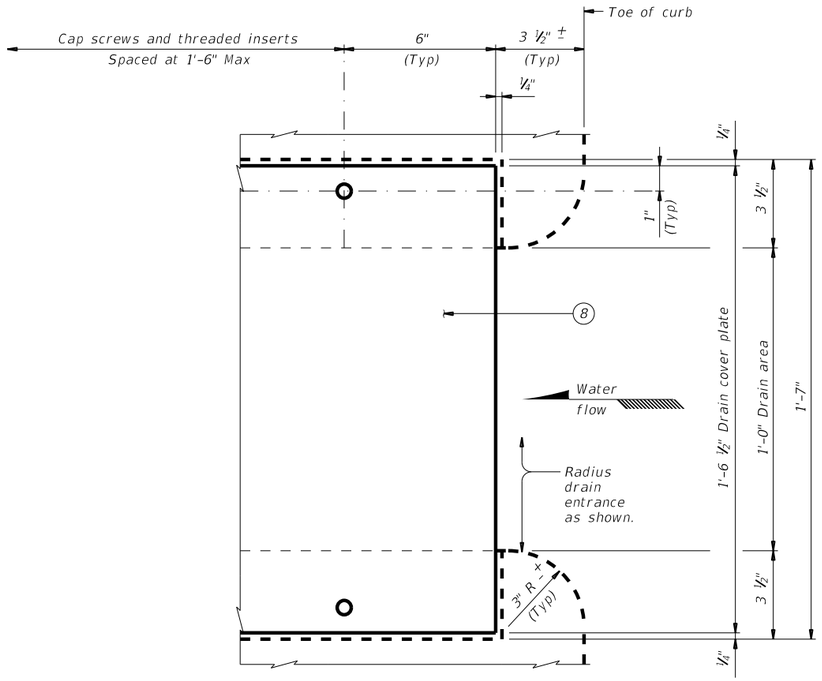

PARTIAL PLAN CURB DRAIN

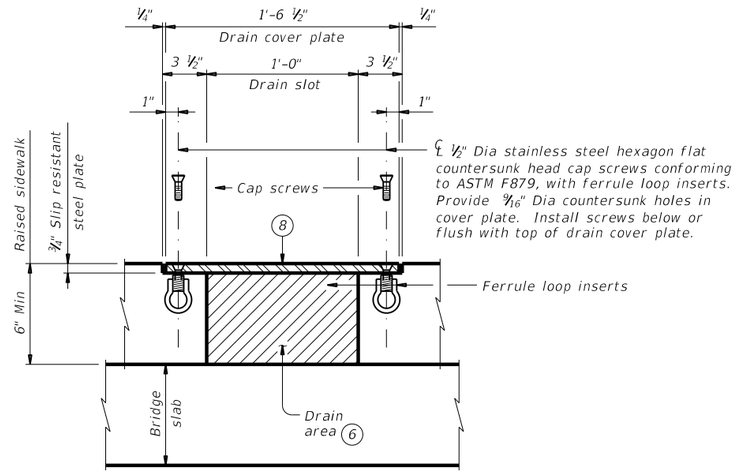

SECTION B-B

Reinforcing not shown for clarity.

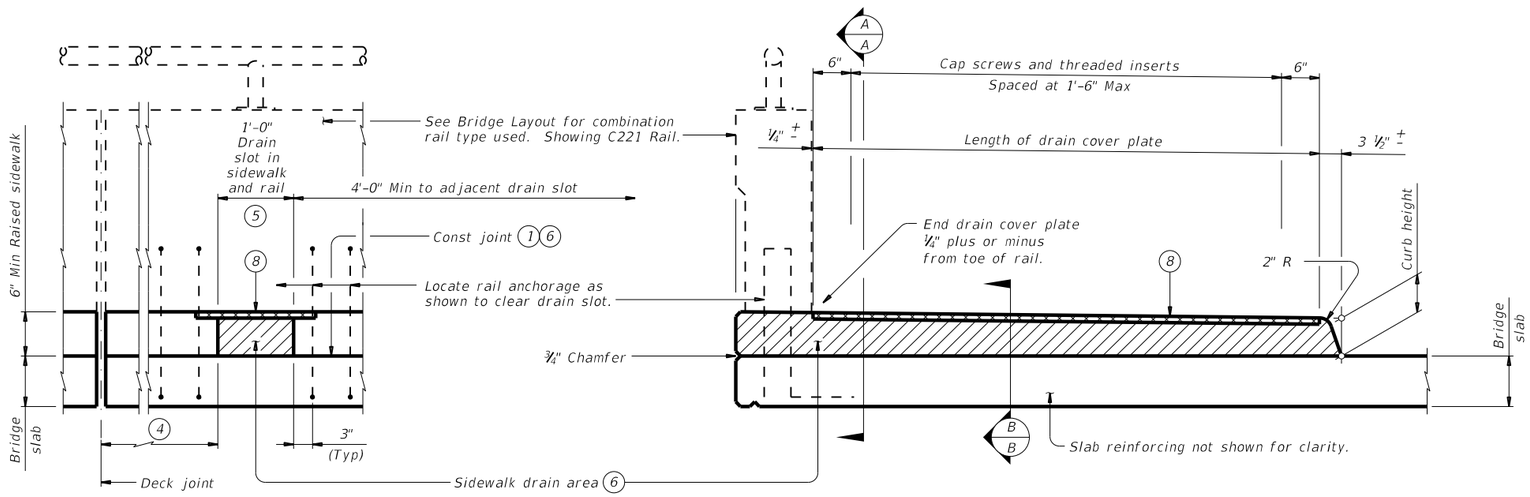

SECTION A-A

SHOWING RAISED SIDEWALK WITH DRAIN SLOT

OPTIONAL DRAIN DETAILS (7)

(1) Provide broom finish to top of bridge slab where raised sidewalk or raised median area is defined.

(4) 3'-0" Min at deck expansion joints, deck construction joints or controlled joints, rail intermediate wall joints or from face of substructure.

(5) For rail Type C1W, center drain slots between posts.

(6) Steel trowel top surface of bridge deck in drain locations.

(7) Provide sidewalk drains where shown elsewhere on the plans or as directed by the Engineer. Do not place drains over railroad tracks, lower roadways, or sidewalks. Place drain and cover plate perpendicular to toe of rail.

(8) Drain cover plate (PL ¾ x 18 ½ slip resistant steel plate). Install flush with top of sidewalk.

DISCLAIMER:
The use of this standard is governed by the "Texas Engineering Practice Act". No warranty of any kind is made by TxDOT for any purpose whatsoever. TxDOT assumes no responsibility for the conversion of this standard to other formats or for incorrect results or damages resulting from its use.

DATE: 3/30/2023 6:51:22 PM
FILE: c:\pw-of\pw-of-prod\quan.haaguirre-fieldS.com\d0226434\BRSM.dgn

SHEET 2 OF 2

Texas Department of Transportation

Bridge Division Standard

BRIDGE RAISED SIDEWALK AND MEDIAN DETAILS

BRSM

FILE: brsmste1-19.dgn	DN: JMH	CK: TxDOT	DW: JTR	CK: TxDOT
©TxDOT April 2019	CONT	SECT	JOB	HIGHWAY
REVISIONS				WYM SPR
	DIST	COUNTY		SHEET NO.
		WILLIAMSON		330

DISCLAIMER:
The use of this standard is governed by the "Texas Engineering Practice Act". No warranty of any kind is made by TxDOT for any purpose whatsoever. TxDOT assumes no responsibility for the conversion of this standard to other formats or for incorrect results or damages resulting from its use.

DATE: 3/30/2023 6:51:39 PM
FILE: c:\pw-of\pw-of-prod\quon.ha@aguirre-fields.com\d0226434\BS-EJCP.dgn

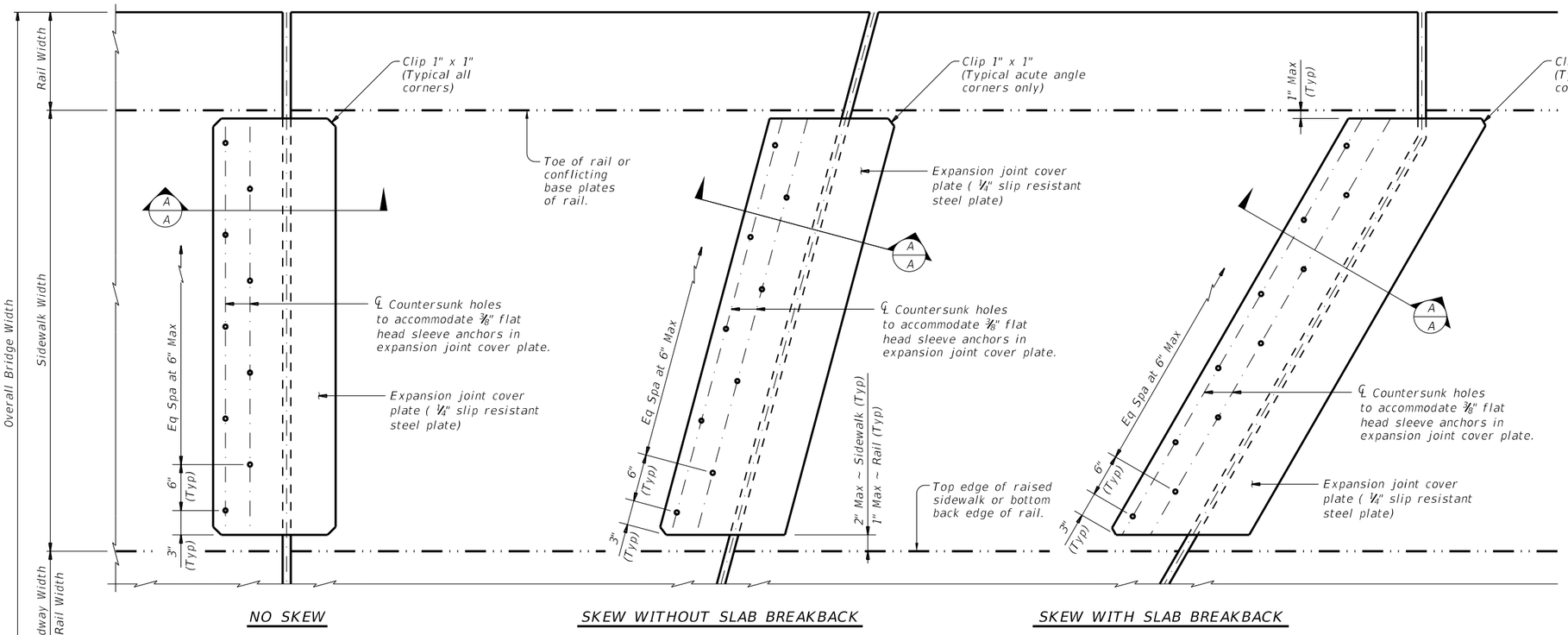

NO SKEW | SKEW WITHOUT SLAB BREAKBACK | SKEW WITH SLAB BREAKBACK

PLAN

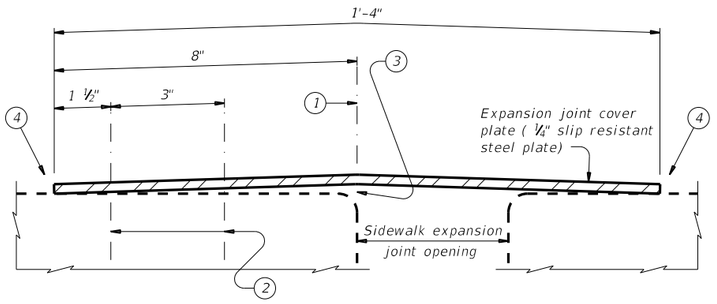

SHOWING LEVEL EXP JOINT

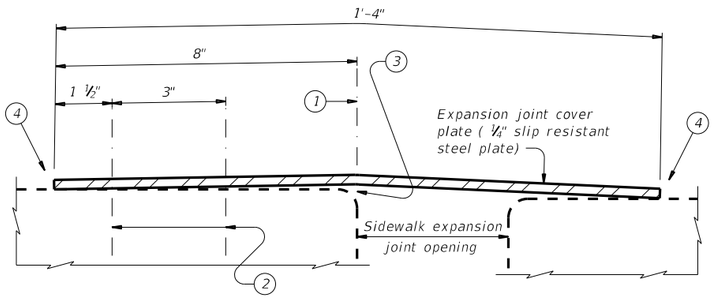

SHOWING UNLEVEL EXP JOINT
(Install sleeve anchors on high side of expansion joint)

SECTION A-A

1. ℄ Expansion joint cover plate and edge of expansion joint.
2. ℄ ⅜" x 2 ½" Min, Flat Head Sleeve Anchors, Stainless Steel. Countersink Flat Head Sleeve Anchors in ¼" Slip Resistant Steel Plate.
3. It is not necessary to remove plate crown provided the plate is firmly secured to the sidewalk.
4. Transverse edges must be in contact with sidewalk surface after installation.

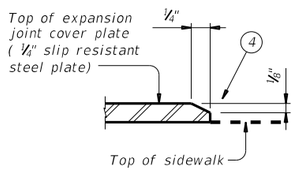

EXP JOINT COVER PLATE BEVEL DETAIL

Bevel all plate edges as shown.

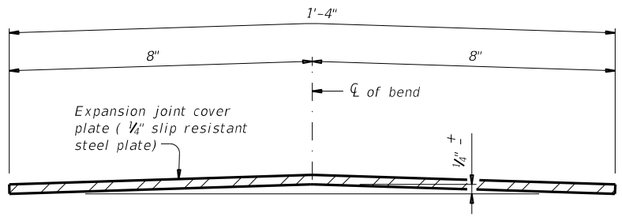

BENDING DIAGRAM OF EXP JOINT COVER PLATE

APPROVED SLIP RESISTANT PLATE	
Product	Manufacturer Website
Algrip™, Steel	www.algrip.com
Mebac® #3, Steel	www.harscoikg.com
SlipNOT® Grade 2, Steel	www.slipnot.com

Provide cover plates fabricated with a product from this list. No exceptions are permitted.

FABRICATION NOTES:

Shop drawings for the fabrication of Bridge Sidewalk Expansion Joint Cover Plate will not require the Engineer's approval if fabrication is in accordance with the details shown on this standard.

A Bridge Sidewalk Expansion Joint Cover Plate Layout which identifies location side of sleeve anchors and orientation of all cover plate sections must be developed by the fabricator. Mark each steel section in accordance with the Bridge Sidewalk Expansion Joint Cover Plate Layout. A copy of the Bridge Sidewalk Expansion Joint Cover Plate Layout is to be provided to the Engineer.

Sidewalk expansion joint cover plates must be hot-dipped galvanized ¼" slip resistant steel plate. Checker plate or diamond plate is not allowed nor are slip resistant tapes, films and non-metallic coatings.

Minimum required yield strength of steel plate is 36 ksi.

Hot-dip galvanize slip resistant steel plate after fabrication in accordance with Item 445, "Galvanizing".

Provide stainless steel flat head sleeve anchors meeting the requirements of ASTM F 593, Group I, Alloy 304. Countersink holes in slip-resistant plate for sleeve anchors. Drill holes in sidewalk as per sleeve anchor manufacturer's recommendations. Install sleeve anchors flush with, or slightly recessed below, top surface of sidewalk expansion joint cover plate.

GENERAL NOTES:

Sidewalk expansion joint cover plates can only accommodate up to a 7" maximum expansion joint opening.

Details provided are applicable to concrete walkway surfaces only.

Payment for sidewalk expansion joint cover plates are by the pound of "Structural Steel (Misc Non-Bridge)" as per Item 442, "Metal for Structures".

Estimated weight of one sidewalk expansion joint cover plate is 14 plf.

Texas Department of Transportation

Bridge Division Standard

BRIDGE SIDEWALK EXPANSION JOINT COVER PLATE (ALL SKEWS)

BS-EJCP

FILE: bsejste1-20.dgn	DN: TxDOT	CK: TxDOT	DW: TxDOT	CK: TxDOT
©TxDOT April 2019	CONT	SECT	JOB	HIGHWAY
REVISIONS				WYM SPR
8-20: Closer tolerances on cover plate.	DIST	COUNTY		SHEET NO.
		WILLIAMSON		331

DISCLAIMER:
The use of this standard is governed by the "Texas Engineering Practice Act". No warranty of any kind is made by TxDOT for any purpose whatsoever. TxDOT assumes no responsibility for the conversion of this standard to other formats or for incorrect results or damages resulting from its use.

DATE: 3/30/2023 6:51:56 PM
FILE: c:\pw-of\pw-of-prod\quan.hoaguirre-fields.com\d0226434\C411.dgn

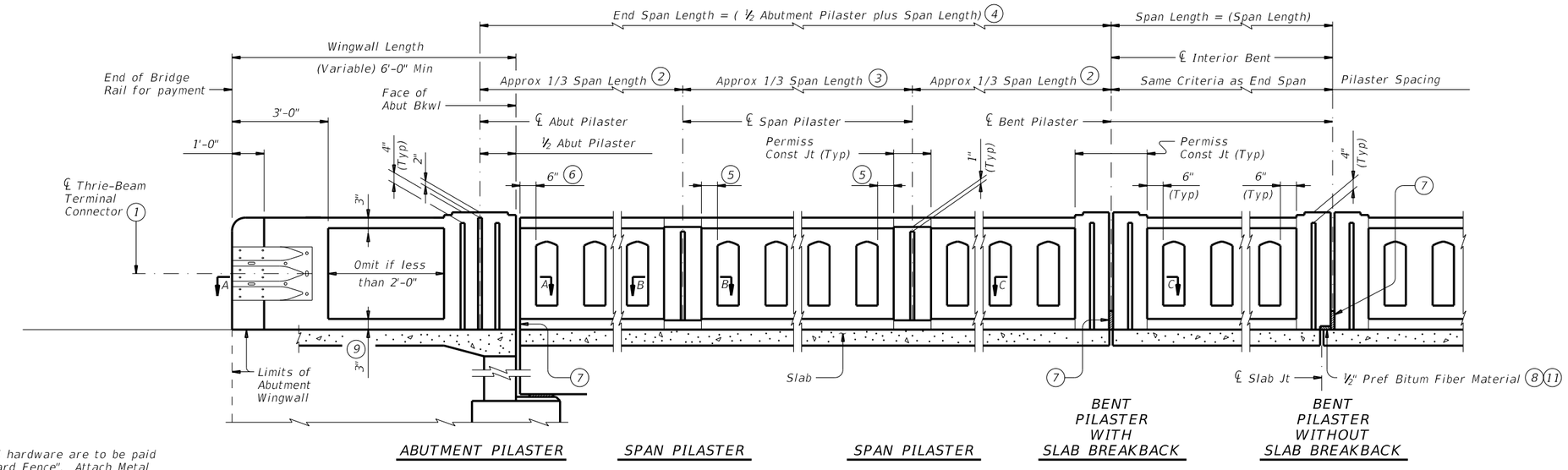

ROADWAY ELEVATION OF RAIL

(Showing without raised sidewalk)

1. Terminal Connectors and associated hardware are to be paid for under the Item "Metal Beam Guard Fence". Attach Metal Beam Guard Fence Transitions to the bridge rail and extend along the embankment unless otherwise shown in the plans.
2. Number of windows in exterior bays are equal.
3. Number of windows in interior bay(s) are not less than the amount in exterior bays (Note 2).
4. Space Span Pilasters at 1/3 span length (Approx) when spans are 100 ft and less, as shown. Space Span Pilasters at 1/5 span length (Approx) for spans greater than 100 ft.
5. Dimension is the same for all posts adjacent to Span Pilasters in a span. Dimension may vary from span to span, Min = 3", Max = 7 ½".
6. Min = 6", Max = 1'-3".
7. Provide rail joints at ends of all spans the same width as Slab joint opening, except that Rail Joints over construction joints must be ¼" Min to ¾" Max in width. Joints must be open if slab joint opening is not sealed. Joints over construction joints and over sealed deck joints must be plugged. Forming material used in joints may be left in place if it is light in color and compressible, such as the following materials: polystyrene, molded cork granules, sponge rubber sheet, etc. If forming material is not left in place, plug the bottom 6" with slab joint sealing compound to prevent drainage and staining.
8. Place Preformed Bituminous Fiber Material between slab and rail when rail extends over expansion joint. Shift Bars U as necessary.
9. Increase 2" for structures with overlay.
10. Place 4 additional Bars WH(#5) 3'-8" in length inside Bars S(#5) and centered 2'-0" from end of rail when Terminal Connections are required. Field bend as needed.
11. Shift U Bars from region below ½" Preformed Bituminous Fiber Material at joints.

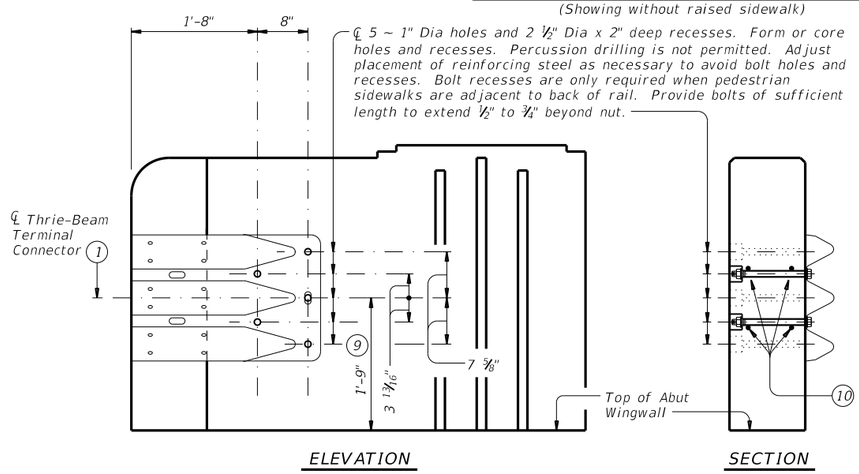

TERMINAL CONNECTION DETAILS

(Showing parapet with Pilaster on 6'-0" Wingwall)

ELEVATION SHOWING TYPICAL REINFORCING PLACEMENT

(Showing without raised sidewalk)

The use of this railing is restricted to speeds of 45 mph or less.

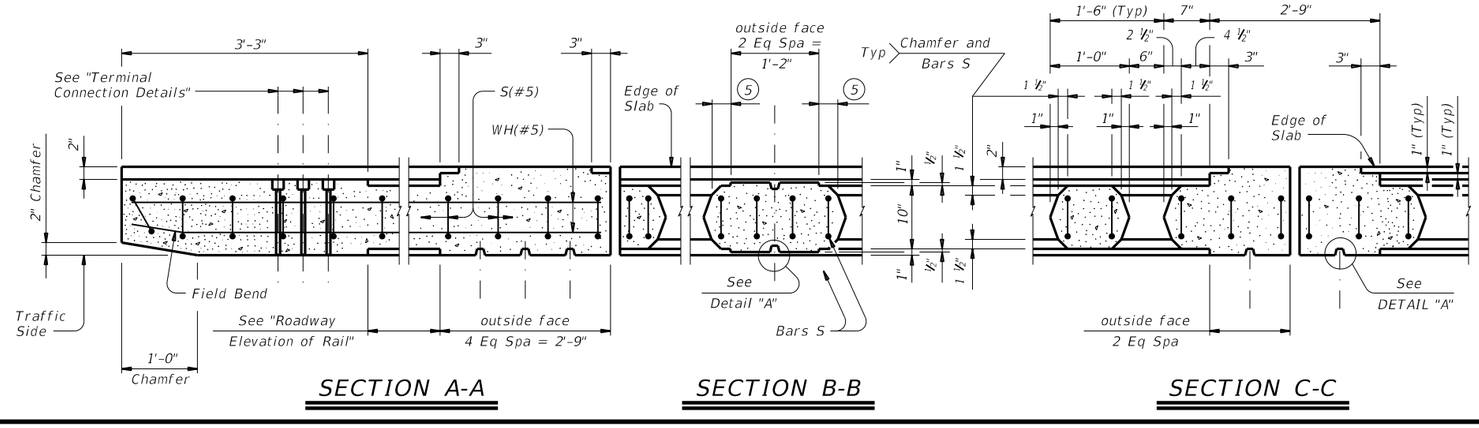

SECTION A-A | SECTION B-B | SECTION C-C

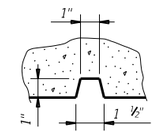

DETAIL "A"

SHEET 1 OF 3

Texas Department of Transportation

Bridge Division Standard

COMBINATION RAIL TEXAS CLASSIC

TYPE C411

FILE:	rlstd021-20.dgn	DN: TxDOT	CK: TxDOT	DW: TxDOT	CK: TxDOT
©TxDOT	September 2019	CONT	SECT	JOB	HIGHWAY
REVISIONS					WYM SPR
7-20: Bronze star change to one manufacturer.		DIST	COUNTY		SHEET NO.
			WILLIAMSON		332

DISCLAIMER:
The use of this standard is governed by the "Texas Engineering Practice Act". No warranty of any kind is made by TxDOT for any purpose whatsoever. TxDOT assumes no responsibility for the conversion of this standard to other formats or for incorrect results or damages resulting from its use.

DATE: 3/30/2023 6:51:57 PM
FILE: c:\pw-of\pw-of-prod\quan.ha@aguirre-fields.com\d0226434\C411.dgn

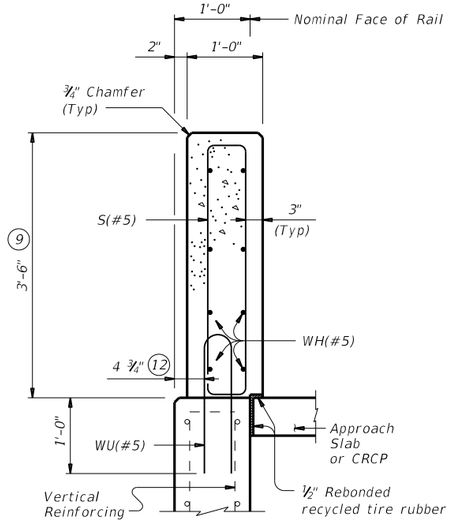

ON ABUTMENT WINGWALLS OR CIP RETAINING WALLS

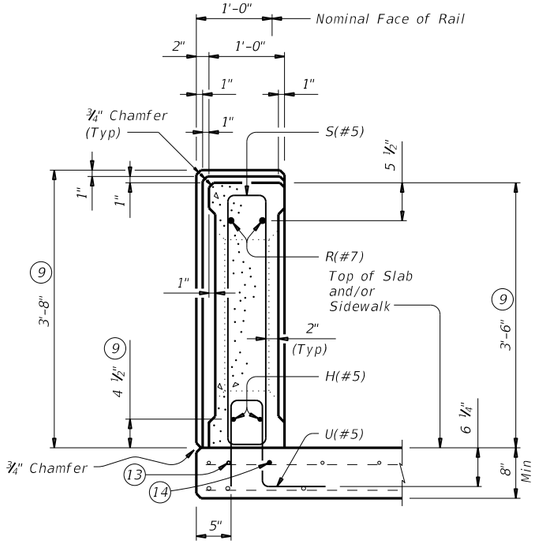

SECTION THRU POST ON BRIDGE SLAB
(Showing Pilaster)

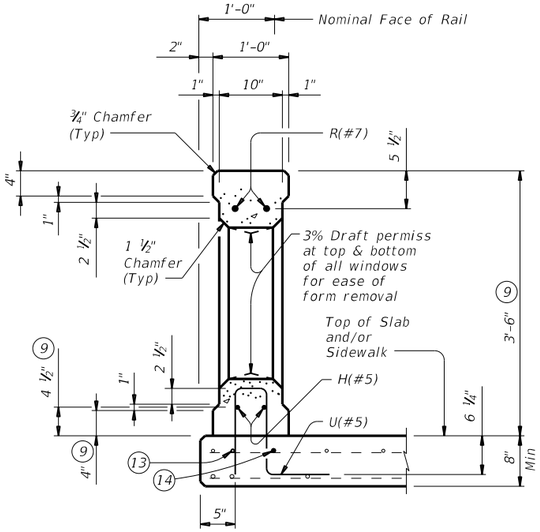

SECTION THRU WINDOW ON BRIDGE SLAB

SECTIONS THRU RAIL WITHOUT RAISED SIDEWALK

(9) Increase 2" for structures with overlay.

(12) 5 ¼" when vertical reinforcing has closer clear cover over horizontal reinforcing in abutment wingwalls or retaining walls on traffic side of wall.

(13) As an aid in supporting reinforcement, additional longitudinal bars may be used in the slab with the approval of the Engineer. Such bars must be furnished at the Contractor's expense.

(14) Top longitudinal slab bar may be adjusted laterally 3" plus or minus to tie reinforcing.

(15) Raised Sidewalk

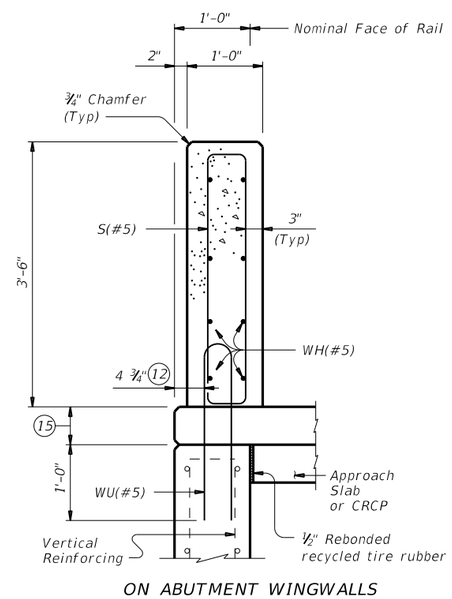

ON ABUTMENT WINGWALLS OR CIP RETAINING WALLS

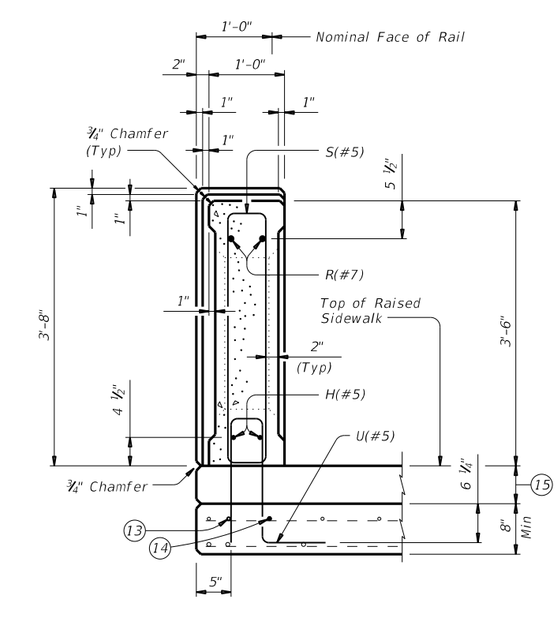

SECTION THRU POST ON BRIDGE SLAB
(Showing Pilaster)

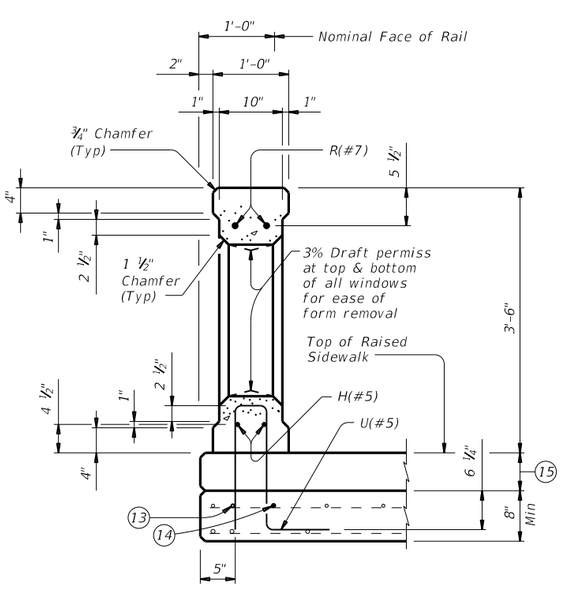

SECTION THRU WINDOW ON BRIDGE SLAB

SECTIONS THRU RAIL WITH RAISED SIDEWALK

Texas Department of Transportation

Bridge Division Standard

COMBINATION RAIL TEXAS CLASSIC

TYPE C411

FILE: rlstd021-20.dgn	DN: TxDOT	CK: TxDOT	DW: TxDOT	CK: TxDOT
©TxDOT September 2019	CONT	SECT	JOB	HIGHWAY
REVISIONS				WYM SPR
7-20: Bronze star change to one manufacturer.	DIST	COUNTY		SHEET NO.
		WILLIAMSON		333

DISCLAIMER:
The use of this standard is governed by the "Texas Engineering Practice Act". No warranty of any kind is made by TxDOT for any purpose whatsoever. TxDOT assumes no responsibility for the conversion of this standard to other formats or for incorrect results or damages resulting from its use.

DATE: 3/30/2023 6:51:57 PM
FILE: c:\pw-df\pw-prod\quan.hoaguirre-fields.com\d0226434\c411.dgn

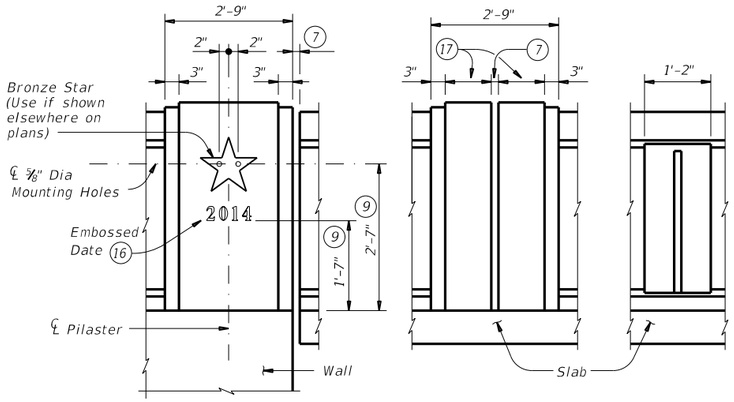

ABUTMENT BENT SPAN

EXTERIOR PILASTER ELEVATIONS

(Showing without raised sidewalk)

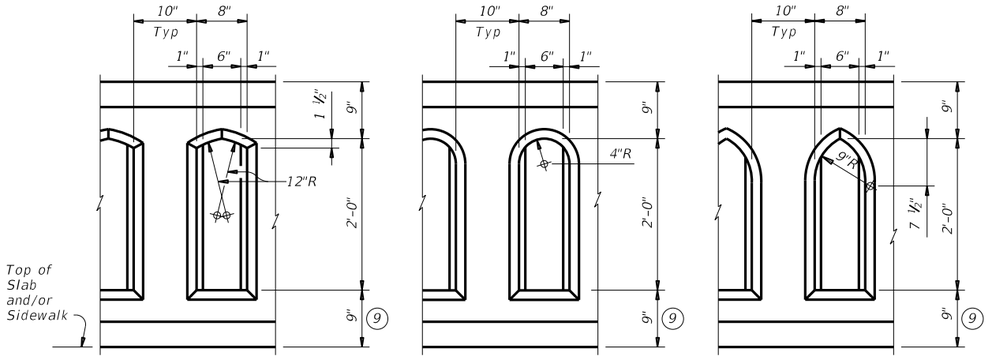

TYPE A TYPE B TYPE C

WINDOW TYPES

BARS U (#5) BARS WU (#5) BARS S (#5)

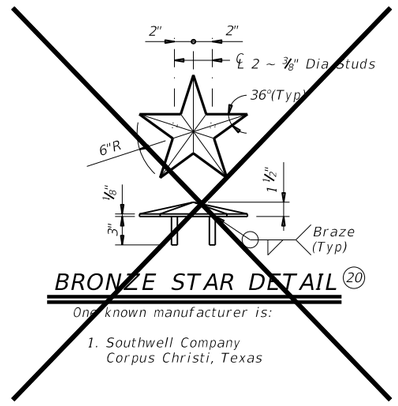

BRONZE STAR DETAIL (20)

One known manufacturer is:

1. Southwell Company
   Corpus Christi, Texas

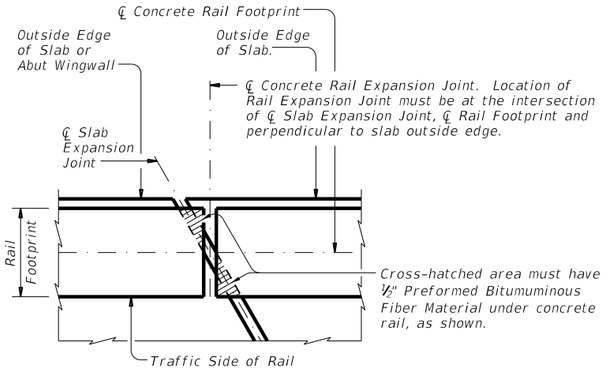

PLAN OF RAIL AT EXPANSION JOINTS

Example showing Slab Expansion Joints without breakbacks.

(7) Provide rail joints at ends of all spans the same width as Slab joint opening, except that Rail Joints over construction joints must be ¼" Min to ¾" Max in width. Joints must be open if slab joint opening is not sealed. Joints over construction joints and over sealed deck joints must be plugged. Forming material used in joints may be left in place if it is light in color and compressible, such as the following materials: polystyrene, molded cork granules, sponge rubber sheet, etc. If forming material is not left in place, plug the bottom 6" with slab joint sealing compound to prevent drainage and staining.

(9) Increase 2" for structures with overlay.

(16) Construction year (use if shown elsewhere on plans) 3" High "Plantin Bold" Typeface with ¼" recess. Placed at one Abutment only or as directed by the Engineer.

(17) Dimensions must be the same on each side of joint.

(18) For raised sidewalks, add sidewalk height to total bar height. Use sidewalk height at rail's location.

(19) Reduce by 2" or field bend over Preformed Bituminous Fiber Material to gain cover.

(20) Bronze Star dimensions of the final product can be slightly smaller due to shrinkage after casting.

CONSTRUCTION NOTES:

Attach Bronze Star with a Type III Class C, D, E, or F epoxy adhesive. Clamp star until epoxy achieves set. Remove any visible epoxy "squeeze out" from under star.

Face of rail and pilasters, parapet must be plumb unless otherwise approved.

Apply a one rub finish to all railing surfaces unless otherwise shown elsewhere on the plans.

MATERIAL NOTES:

Provide Class "C" concrete for railing. Provide Class "C" (HPC) concrete if shown elsewhere in the plans.

Provide Grade 60 reinforcing steel.

Epoxy coat or galvanize all reinforcing steel if slab bars are epoxy coated or galvanized.

Bronze Star must be cast of architectural bronze having the following composition: Copper 85 %, Tin 5 %, Lead 5 %, Zinc 5 %.

Provide bar laps, where required, as follows:

Uncoated or galvanized ~ #5 = 2'-0"
Uncoated or galvanized ~ #7 = 2'-11"
Epoxy coated ~ #5 = 3'-0"
Epoxy coated ~ #7 = 4'-4"

GENERAL NOTES:

This rail has been successfully evaluated by full-scale crash test to meet MASH TL-2 criteria. This rail can be used for speeds of 45 mph and less when a TL-2 or TL-3 rated guard fence transition is used. This rail is only approved for low speed use, speeds of 45 mph and less.

Do not use this railing on bridges with expansion joints providing more than 5" movement.

Rail anchorage details shown on this standard may require modification for select structure types. See appropriate details elsewhere in plans for these modifications.

Shop drawings will not be required for this rail.

See Bridge Layout or other plan sheets for the following: dimensions with the number of span pilasters, dimensions with the number of windows, window type, inclusion of bronze stars, inclusion of construction year with abutment identity.

Submit erection drawings showing span number, span pilaster locations, number of windows between pilasters and spacing to first window (see Note 6) to the Engineer for approval.

Average weight of railing with no overlay increase and no pilasters is 350 plf.

Cover dimensions are clear dimensions, unless noted otherwise.

Reinforcing bar dimensions shown are out-to-out of bar.

Texas Department of Transportation

Bridge Division Standard

COMBINATION RAIL TEXAS CLASSIC

TYPE C411

FILE:	r1std021-20.dgn	DN: TxDOT	CK: TxDOT	DW: TxDOT	CK: TxDOT
©TxDOT	September 2019	CONT	SECT	JOB	HIGHWAY
REVISIONS					WYM SPR
7-20: Bronze star change to one manufacturer.		DIST	COUNTY		SHEET NO.
			WILLIAMSON		334

DISCLAIMER:
The use of this standard is governed by the "Texas Engineering Practice Act". No warranty of any kind is made by TxDOT for any purpose whatsoever. TxDOT assumes no responsibility for the conversion of this standard to other formats or for incorrect results or damages resulting from its use.

DATE: 3/30/2023 6:52:13 PM
FILE: c:\pw-of\pw-of-prod\quan.ha@aguirre-fields.com\d0226434\CRR.dgn

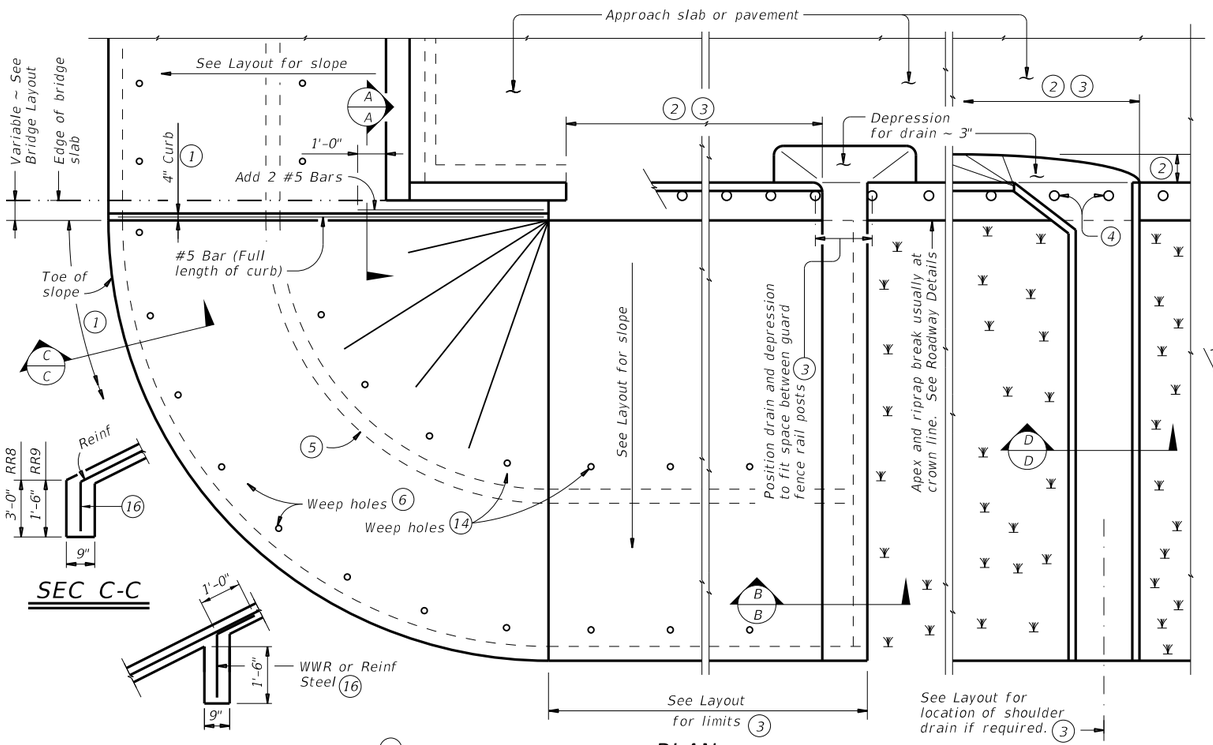

PLAN

SEC C-C

INTERMEDIATE TOEWALL (5)

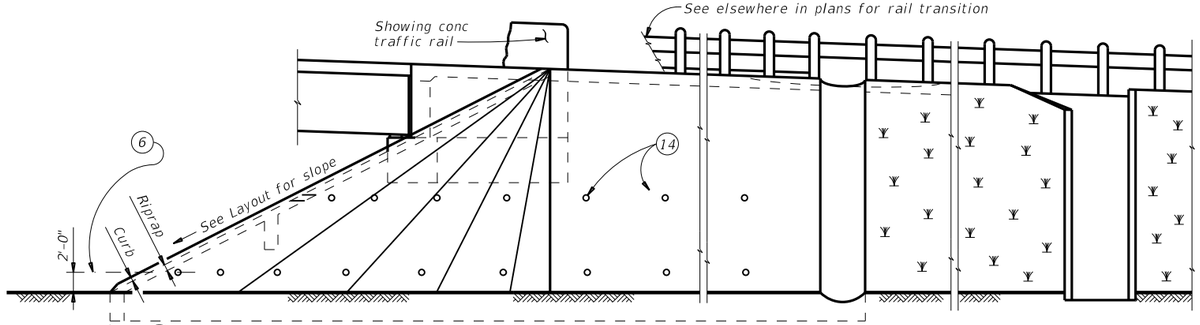

ELEVATION

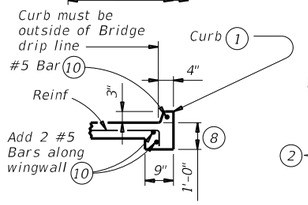

SEC A-A

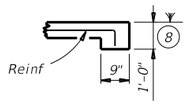

SEC B-B

(No drain)

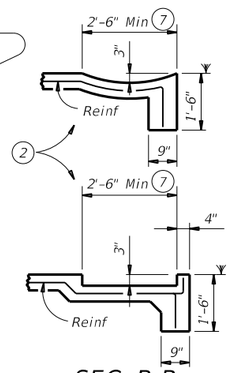

SEC B-B

(Shoulder drain integral with riprap)

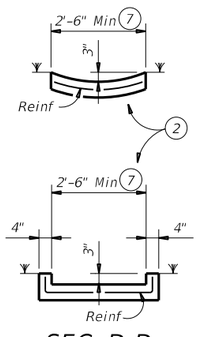

SEC D-D

(Shoulder drain)

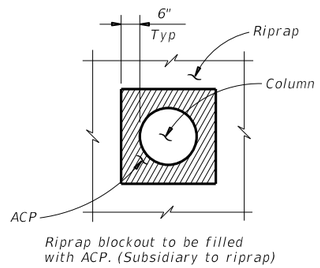

Riprap blockout to be filled with ACP. (Subsidiary to riprap)

RIPRAP DETAIL AT COLUMNS

(As directed by the Engineer)

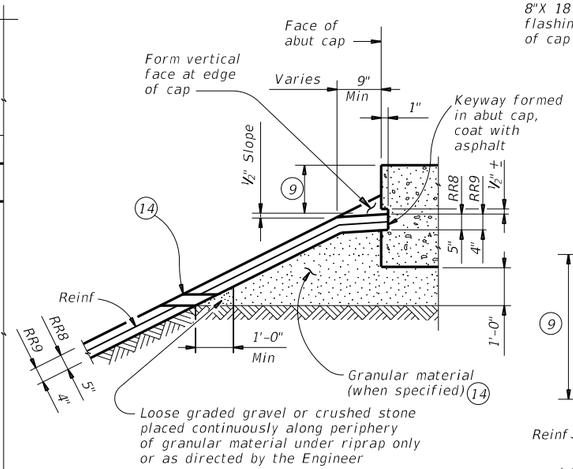

SHOWING KEYWAY OPTION

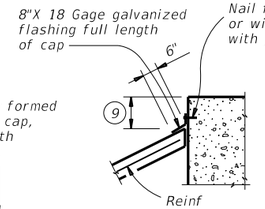

CAP OPTION A

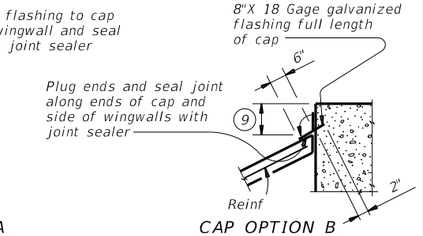

CAP OPTION B

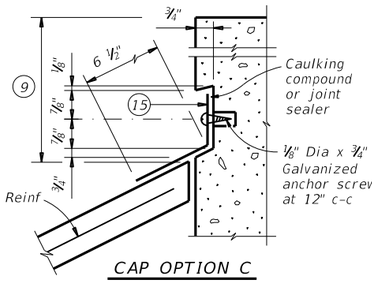

CAP OPTION C

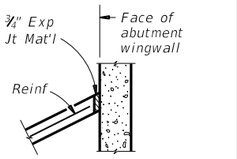

SECT THRU RIPRAP AT WINGWALL (12)

SECTIONS THRU RIPRAP AT CAP (11)

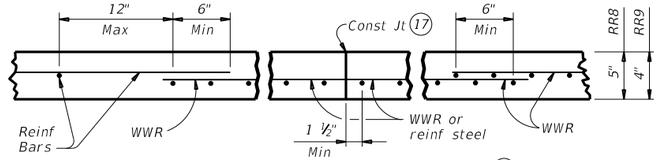

REINFORCEMENT DETAILS (13)

See General Notes for optional synthetic fiber reinforcement.

1. When riprap is shown extended around header on layout, extend slab and toewall as shown and eliminate 4" curb.
2. Limits and configuration of drains and depressions are as shown elsewhere in plans or as directed by the Engineer.
3. Location of shoulder drain must consider limitations imposed by rail transition. Do not locate shoulder drains at expansion joints between approach slab and concrete pavement.
4. See details elsewhere in plans for installation of guard fence posts through concrete riprap.
5. Provide intermediate toewall only when designated elsewhere in the plans or included in the specifications.
6. Provide lower level of 2" Dia weep holes at 10' c-c backed by 1 CF packet of gravel and galvanized hardware cloth at all locations unless directed by the Engineer to eliminate.
7. Use wider or other drain configurations if shown elsewhere in plans or if directed by the Engineer.
8. Wall extension may be reduced or modified if approved by the Engineer. Increase wall extension to 1'-6" whenever the optional intermediate toewall is called for in the plans.
9. Top of cap to top of riprap dimension varies as directed by the Engineer. Should be 9" Min for beam/slab type bridges and 1'-6" for slab span, box beam, or slab beam bridges.
10. #5 bars shown are required even when synthetic fiber reinforcing option is selected.
11. Provide sealing option for joint between the face of cap and riprap as designated by the Engineer or as shown elsewhere on plans.
12. Flashing (shown in Cap Option A) may be used at wingwall in addition to Exp Jt Mat'l if shown on plans or directed by the Engineer.
13. Provide #3 reinforcing bars at 18" Spa c-c. Provide Welded Wire Reinforcement (WWR) as 6x6-D2.9xD2.9 or D3xD3. Combinations of WWR and reinforcing bars may be used if both are permitted. Use lap splices of a minimum 6 inches, measured from the transverse wire of WWR, and the ends of reinforcing bars.
14. If granular material is specified, provide upper level of 2" Dia weep holes at 10' c-c backed by galvanized hardware cloth.
15. 8" x 18 Gage Galv Sheet Metal
16. Provide WWR or #3 bars, with 1'-0" extension into slope.
17. WWR or reinforcing steel is continuous through riprap construction joints. Provide WWR or reinforcing steel that extends 1'-1" minimum into adjacent riprap on each side of construction joint even if synthetic reinforcing fiber is utilized.

FOR CONTRACTOR'S INFORMATION ONLY:
5" of RR8 = 0.015 CY/SF
4" of RR9 = 0.012 CY/SF
#3 Reinf at 18" c-c = 0.501 Lbs/SF
6x6-D3xD3 = 0.408 Lbs/SF

GENERAL NOTES:

Provide Class "B" concrete (f'c = 2,000 psi) unless noted elsewhere in plans.

Provide Grade 60 reinforcing steel.

Provide deformed welded wire reinforcement (WWR) meeting ASTM A1064, unless otherwise shown.

Provide reinforcing bars, deformed WWR, or any suitable combination of both types for riprap reinforcing, unless specified elsewhere in the plans.

Optionally synthetic fibers may be used if approved by the Engineer. Provide synthetic fibers listed on the "Fibers for Concrete" Material Producer List (MPL) in lieu of steel reinforcing in riprap concrete.

Install construction joints or grooved joints extending the full slant slope height at intervals of approximately 20 feet unless otherwise directed by the Engineer.

Hardware cloth, loose grade stone behind weep holes, flashing, or other sealing material are subsidiary to the bid item "Riprap".

See Layout for limits of riprap.

RR8 is to be used on stream crossings.

RR9 is to be used on other embankments.

Texas Department of Transportation

Bridge Division Standard

CONCRETE RIPRAP AND SHOULDER DRAINS
EMBANKMENTS AT BRIDGE ENDS (TYPES RR8 & RR9)

CRR

FILE: crrstde1-19.dgn	DN: TxDOT	CK: TxDOT	DW: TxDOT	CK: TxDOT
©TxDOT April 2019	CONT	SECT	JOB	HIGHWAY
REVISIONS				WYM SPR
	DIST	COUNTY		SHEET NO.
		WILLIAMSON		335

DISCLAIMER:
The use of this standard is governed by the "Texas Engineering Practice Act". No warranty of any kind is made by TxDOT for any purpose whatsoever. TxDOT assumes no responsibility for the conversion of this standard to other formats or for incorrect results or damages resulting from its use.

DATE: 3/30/2023 6:52:29 PM
FILE: c:\pw-df\pw-of-prod\quan.hoaguirre-fields.com\d0226434\CSAB.dgn

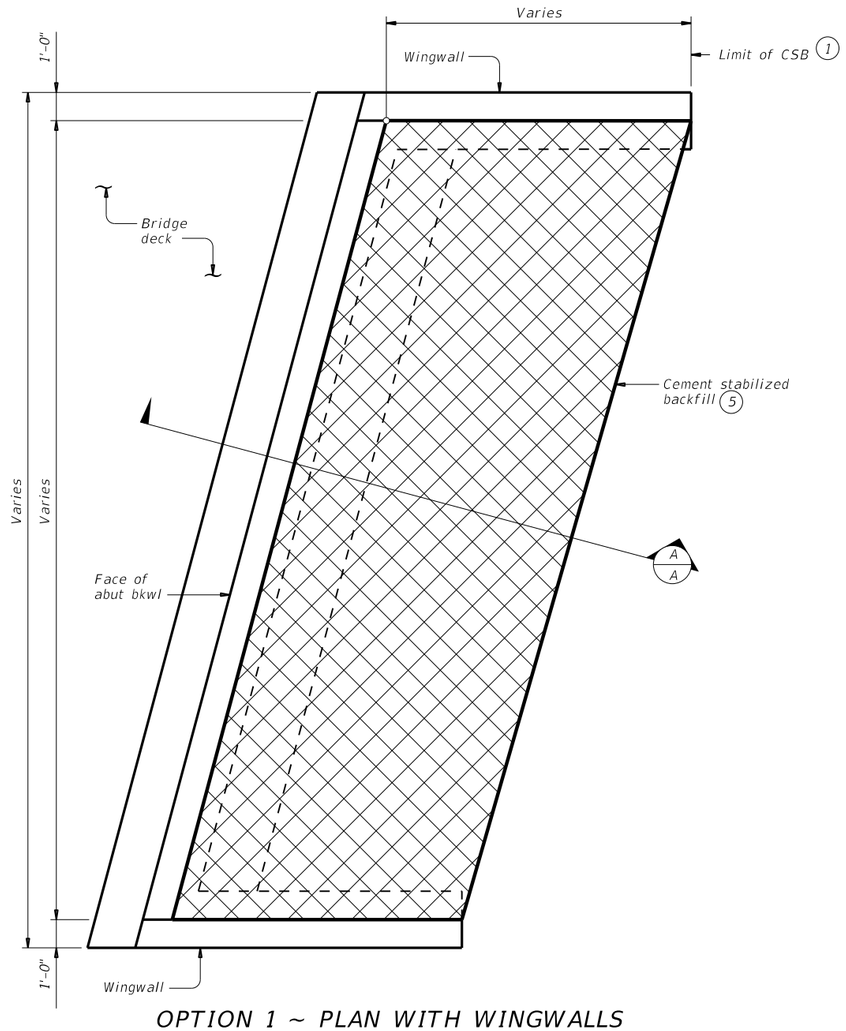

OPTION 1 ~ PLAN WITH WINGWALLS

Cast-in-place retaining walls similar.

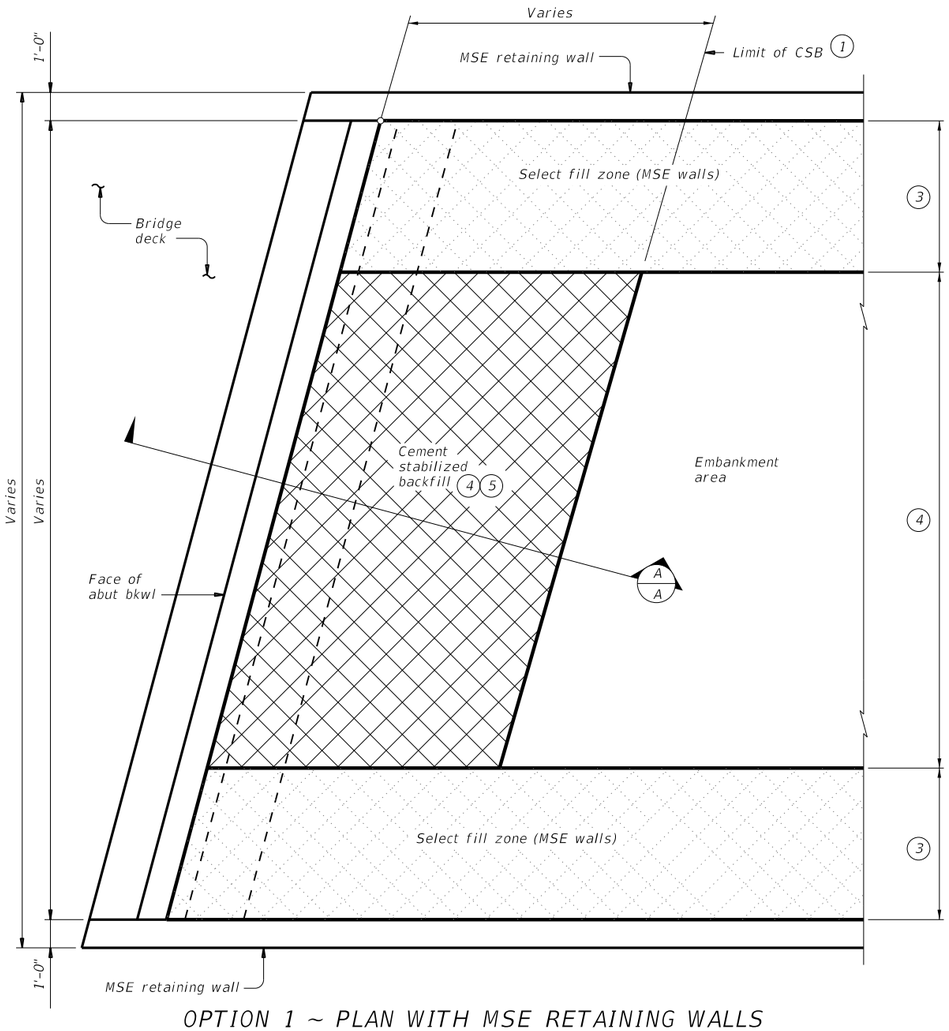

OPTION 1 ~ PLAN WITH MSE RETAINING WALLS

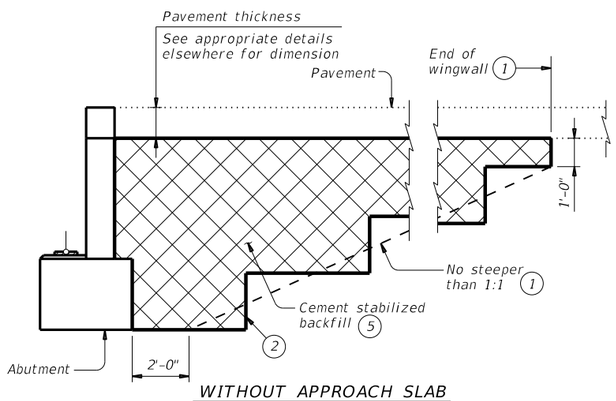

WITHOUT APPROACH SLAB

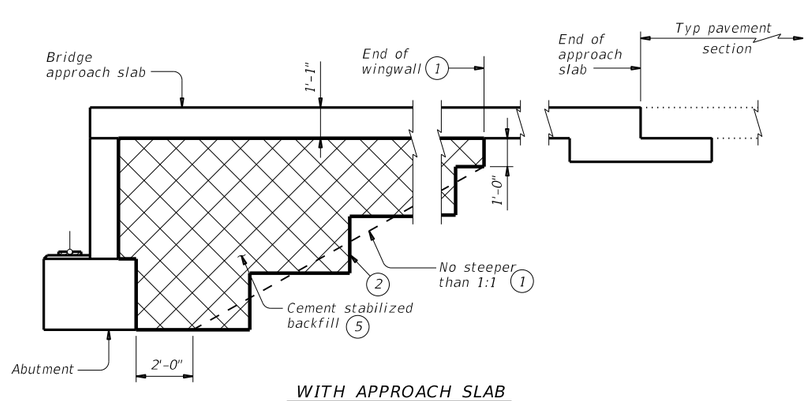

WITH APPROACH SLAB

(Showing BAS-C, BAS-A similar.)

SECTION A-A

(1) Usual limit of Cement Stabilized Backfill is at end of wingwall. Extend CSB limits as required to maintain a slope no steeper than 1:1 at bottom of backfill.

(2) Bench backfill as shown with 12" (approximate) bench depths.

(3) Where MSE retaining walls are present, adjust CSB limits to accommodate the select fill zone. See retaining wall details for additional information.

(4) When distance between select fill zones is less than 5'-0", MSE select fill may be substituted for cement stabilized backfill with approval from the Engineer.

(5) If shown in the plans, flowable backfill can be used as a substitute for cement stabilized backfill with the following constraints:
a). If flowable backfill is to be placed over MSE backfill, then a filter fabric will be placed over the MSE backfill prior to placement of the flowable fill; and
b). Place flowable fill in lifts not exceeding 2 feet in height. Place each successive lift when the previous lift has stiffened/hardened (i.e. has lost its flowability).

GENERAL NOTES:

See the Bridge Layout for selected Option. Option 1 is intended for construction only requiring plasticity index (PI) controlled embankment fill or excavation in competent soils/rocks in order to construct the abutment. Option 2 is intended for new construction requiring high plasticity embankment fill with a PI greater than 30 or pavement built in poor native soil. Poor soils are defined as high plasticity clays or expansive clays.

Construct abutment backfill in accordance with Item 400, "Excavation and Backfill for Structures".

Provide Cement Stabilized Backfill (CSB) meeting the requirements of Item 400, "Excavation and Backfill for Structures", to the limits shown at bridge abutments.

If required elsewhere in the plans, provide Flowable Backfill meeting the requirements of Item 401, "Flowable Backfill", to the limits shown at bridge abutments.

Details are drawn showing left forward skew. See Bridge Layout for actual skew direction.

These details do not apply when Concrete Block retaining walls are used in lieu of wingwalls.

Texas Department of Transportation

Bridge Division Standard

CEMENT STABILIZED ABUTMENT BACKFILL

BRIDGE ABUTMENT

CSAB

FILE: MS-CSAB-23.dgn	DN: TxDOT	CK: TxDOT	DW: TxDOT	CK: TxDOT
©TxDOT April 2019	CONT	SECT	JOB	HIGHWAY
REVISIONS				WYM SPR
02-20: Added Option 2. 03-23: Updated General Notes.	DIST	COUNTY		SHEET NO.
		WILLIAMSON		336

DISCLAIMER:
The use of this standard is governed by the "Texas Engineering Practice Act". No warranty of any kind is made by TxDOT for any purpose whatsoever. TxDOT assumes no responsibility for the conversion of this standard to other formats or for incorrect results or damages resulting from its use.

DATE: 3/30/2023 6:52:36 PM
FILE: c:\pw-of\pw-of-prod\quan.hoaguirre-fields.com\d0226434\CSAB.dgn

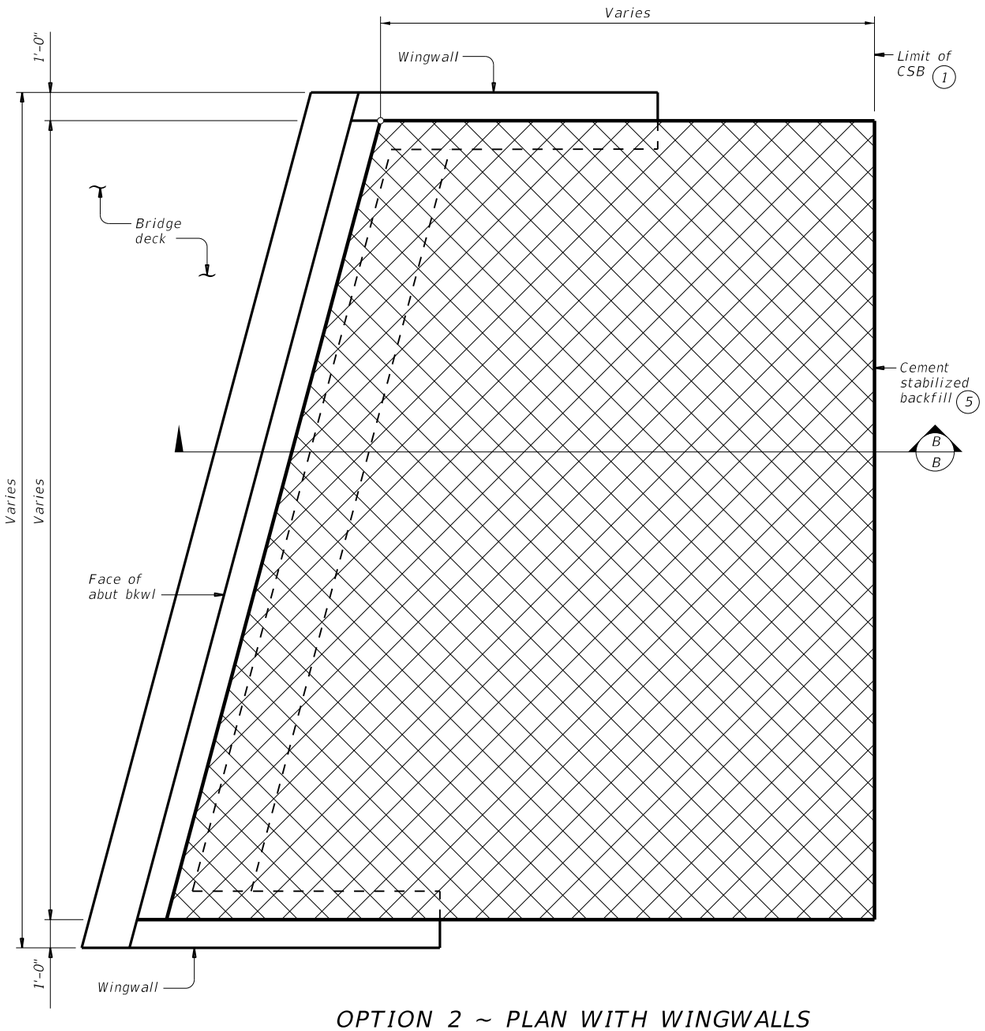

OPTION 2 ~ PLAN WITH WINGWALLS

Cast-in-place retaining walls similar.

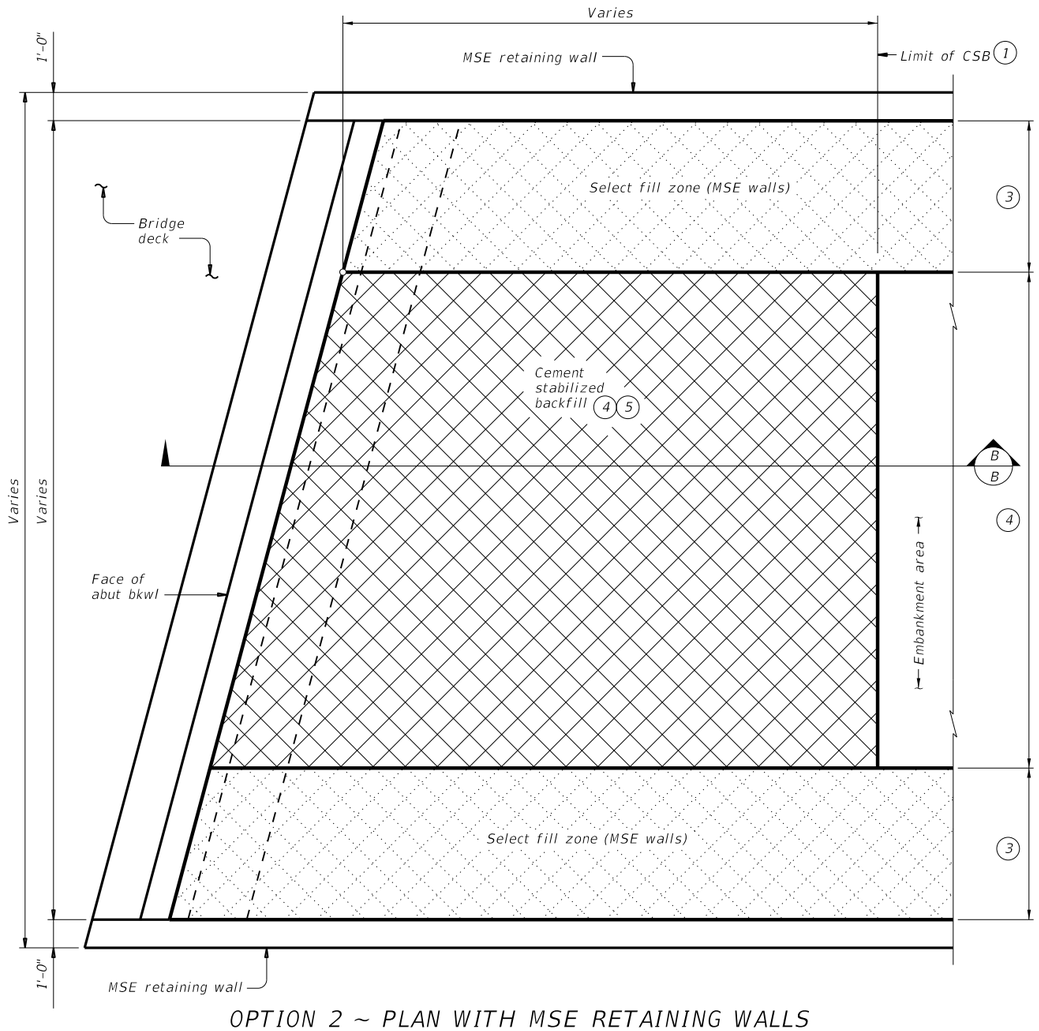

OPTION 2 ~ PLAN WITH MSE RETAINING WALLS

(1) Usual limit of Cement Stabilized Backfill is at end of wingwall. Extend CSB limits as required to maintain a slope no steeper than 1:1 at bottom of backfill.

(2) Bench backfill as shown with 12" (approximate) bench depths.

(3) Where MSE retaining walls are present, adjust CSB limits to accommodate the select fill zone. See retaining wall details for additional information.

(4) When distance between select fill zones is less than 5'-0", MSE select fill may be substituted for cement stabilized backfill with approval from the Engineer.

(5) If shown in the plans, flowable backfill can be used as a substitute for cement stabilized backfill with the following constraints:
a). If flowable backfill is to be placed over MSE backfill, then a filter fabric will be placed over the MSE backfill prior to placement of the flowable fill; and
b). Place flowable fill in lifts not exceeding 2 feet in height. Place each successive lift when the previous lift has stiffened/hardened (i.e. has lost its flowability).

(6) 1'-0" for BAS-A
1'-10" for BAS-C

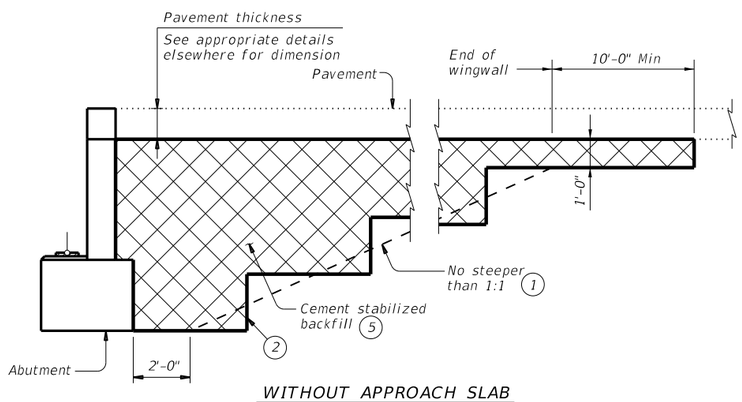

WITHOUT APPROACH SLAB

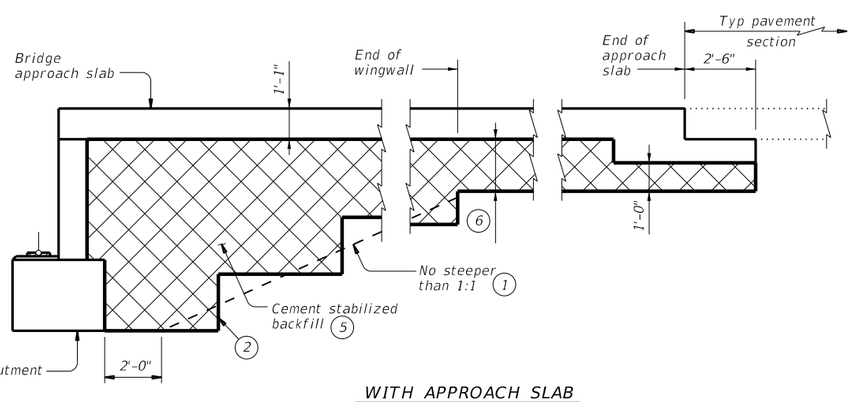

WITH APPROACH SLAB
(Showing BAS-C, BAS-A similar.)

SECTION B-B

SHEET 2 OF 2

Texas Department of Transportation

Bridge Division Standard

CEMENT STABILIZED ABUTMENT BACKFILL

BRIDGE ABUTMENT

CSAB

FILE: MS-CSAB-23.dgn	DN: TxDOT	CK: TxDOT	DW: TxDOT	CK: TxDOT
©TxDOT April 2019	CONT	SECT	JOB	HIGHWAY
REVISIONS				WYM SPR
02-20: Added Option 2. 03-23: Updated General Notes.	DIST	COUNTY		SHEET NO.
		WILLIAMSON		337

DISCLAIMER:
The use of this standard is governed by the "Texas Engineering Practice Act". No warranty of any kind is made by TxDOT for any purpose whatsoever. TxDOT assumes no responsibility for the conversion of this standard to other formats or for incorrect results or damages resulting from its use.

DATE: 3/30/2023 6:52:51 PM
FILE: c:\pw-of\pw-of-prod\quan.haaguirre-fields.com\d0226434\IGCS.dgn

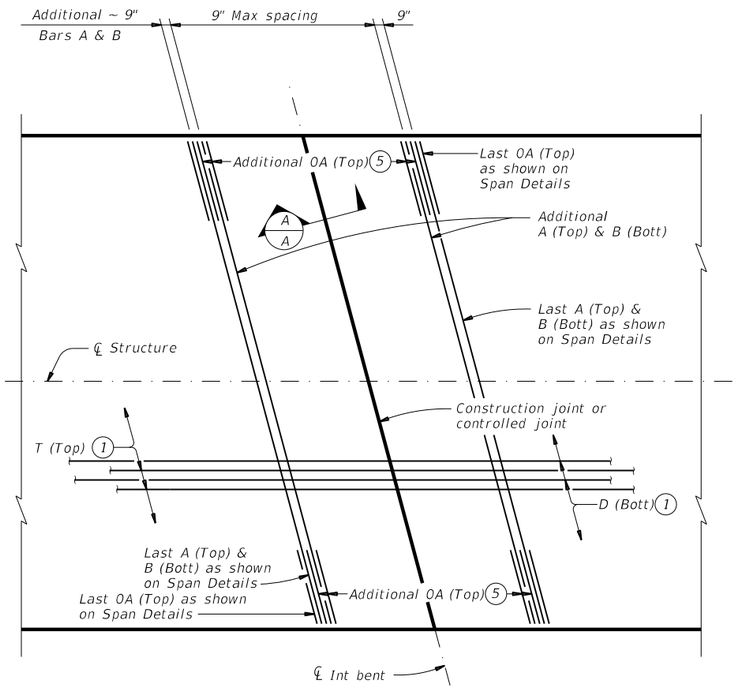

PLAN FOR 0° OR 15° SKEW

(Showing 15° skew)

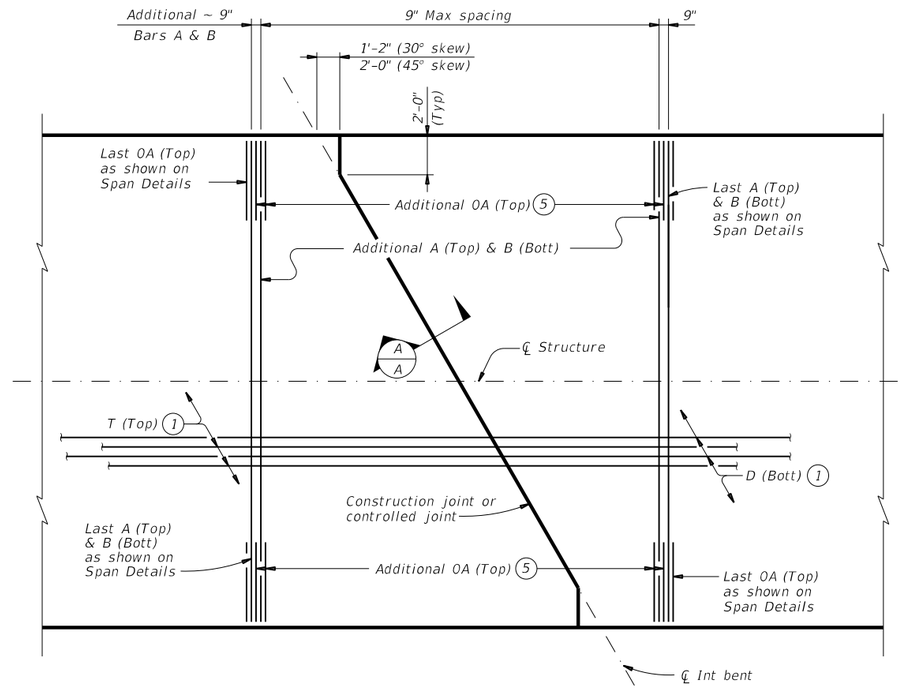

PLAN FOR 30° OR 45° SKEW

(Showing 30° skew)

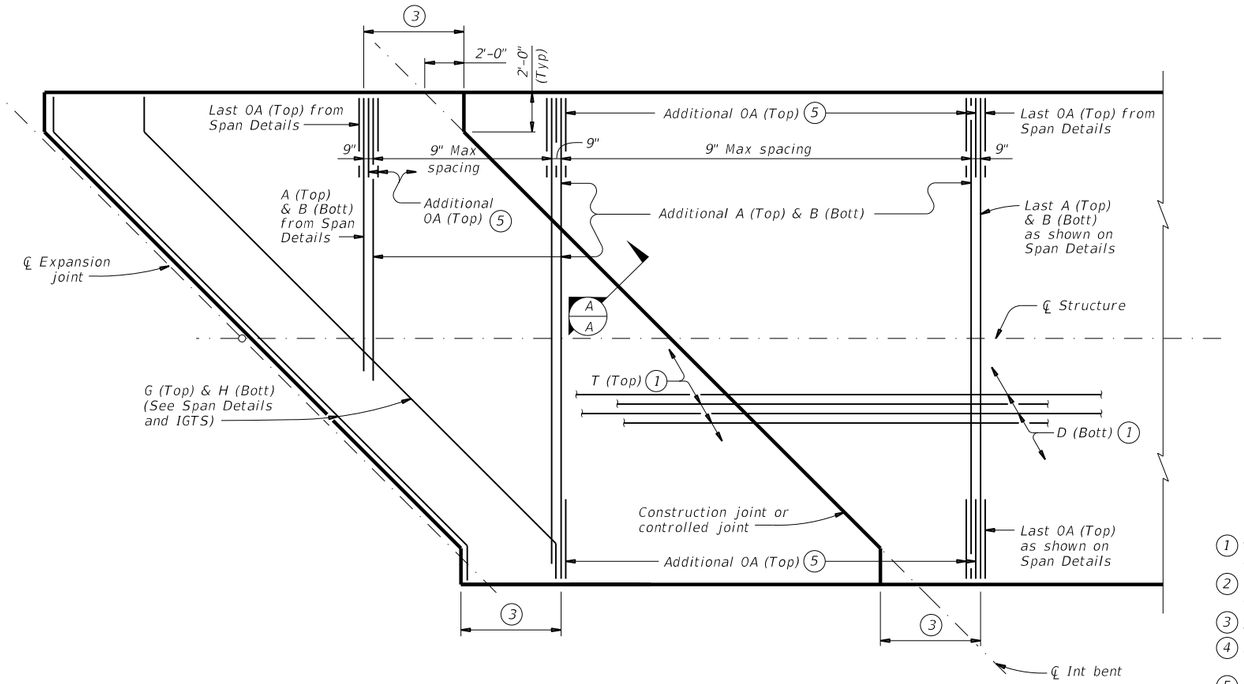

PLAN FOR 45° SKEW 4

(Showing short span condition.)



BARS OA (#5)

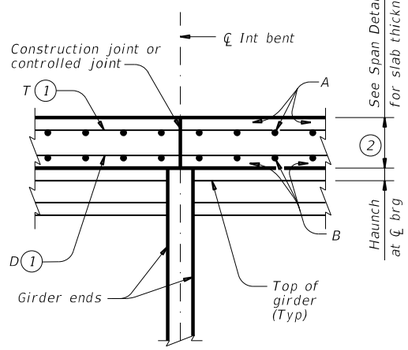

SECTION A-A

Bars 0A (Top) not shown for clarity.

1. Top and bottom mats must be continuous through joint.
2. Maintain a constant slab thickness over the bent.
3. 5'-4" as shown on Span Details.
4. Use these details when no full slab width bars A and B are shown on Span Details.
5. Bars 0A (Top) at 9" Max spacing between Bars A (Top).
6. Values in table assume a temperature change of 70° F after erection when calculating thermal movement in one direction (not total).

TABLE OF 6 ALLOWABLE UNIT LENGTH

Max Rdwy Grade, Percent	Unit Length Factor
0.00	4.1
1.00	3.9
2.00	3.7
3.00	3.5
4.00	3.3
5.00	3.1

Unit length must not exceed the length of the shortest end span times the Unit Length Factor shown in table or 400', whichever is less.

BAR TABLE

BAR	SIZE
A	#4
B	#4
D	#4
T	#4
0A	#5

The details shown on this sheet are applicable for two and three span units comprised of the same girder type.
Units may be comprised of different span lengths. See "Table of Allowable Unit Length".

GENERAL NOTES:

Designed according to AASHTO LRFD Bridge Design Specifications.

This standard is drawn showing right forward skew. See Bridge Layout for actual skew direction.

CONSTRUCTION NOTES:

Where multi-span units are indicated on the Bridge Layout, the thickened slab end details and reinforcement shown on IGTS standard (Bars AA, G, H, J, K, and M) and on the Span Details will be omitted where slabs are continuous over interior bents. At these locations, the slab details and reinforcement will be as shown on this sheet or on PCP standard (if using this option).

Thickened slab end reinforcement and details still apply at expansion joint locations (ends of units).

See Span Details for remainder of slab reinforcement and details.

MATERIAL NOTES:

Provide Grade 60 reinforcing steel.

Provide Class "S" concrete (f'c = 4,000 psi). Provide Class "S" (HPC) if shown elsewhere on the plans.

Provide bar laps, where required, as follows:
Uncoated ~ #4 = 1'-7"
Epoxy Coated ~ #4 = 2'-5"

The details shown on this sheet are applicable for use only with the Prestressed Concrete I-Girder Standard Designs shown on standards IGSD-24, IGSD-28, IGSD-30, IGSD-32, IGSD-38, IGSD-40 and IGSD-44.

HL93 LOADING

Texas Department of Transportation

Bridge Division Standard

CONTINUOUS SLAB DETAILS

PRESTR CONC I-GIRDER SPANS

IGCS

FILE: igcs1sts-19.dgn	DN: JMH	CK: TxDOT	DW: JTR	CK: TxDOT
©TxDOT August 2017	CONT	SECT	JOB	HIGHWAY
REVISIONS 10-19: Added bubble note 6.				WYM SPR
	DIST	COUNTY		SHEET NO.
		WILLIAMSON		338

DISCLAIMER:
The use of this standard is governed by the "Texas Engineering Practice Act". No warranty of any kind is made by TxDOT for any purpose whatsoever. TxDOT assumes no responsibility for the conversion of this standard to other formats or for incorrect results or damages resulting from its use.

DATE: 3/30/2023 6:53:07 PM
FILE: c:\pw-df\pw-df-prod\gan.hagguirre-fields.com\d0226434\IGD.dgn

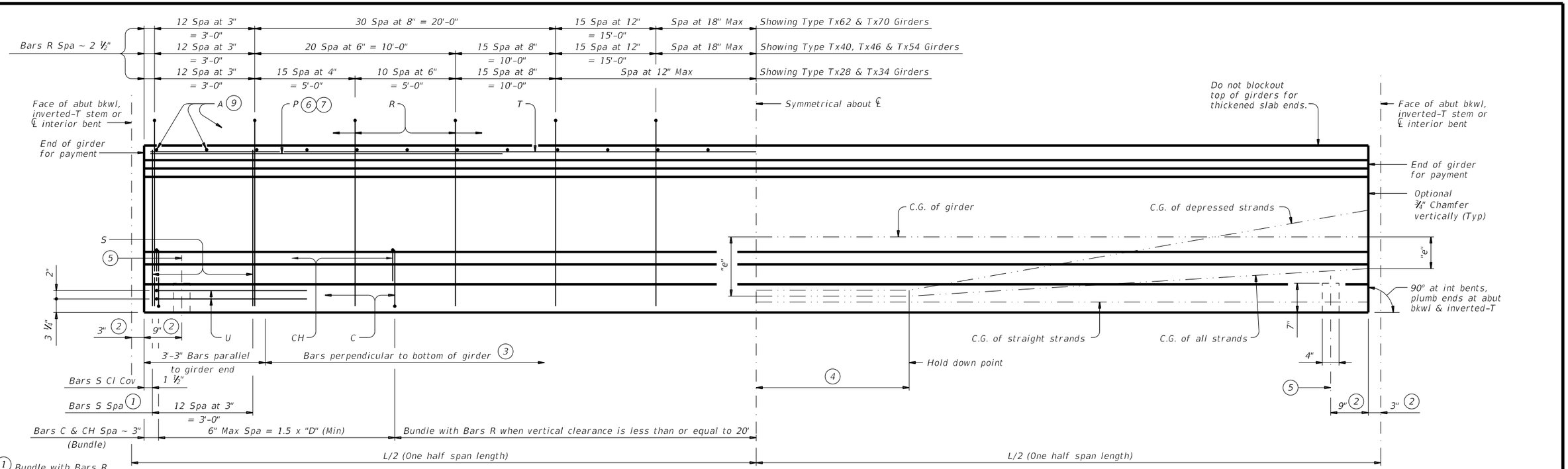

(1) Bundle with Bars R.

(2) Measured along ℄ Girder at interior bents; perpendicular to abutment bkwl or inverted-T stem.

(3) The average of the top and bottom spacing of Bars R cannot exceed the required spacing.

(4) L/20, but not less than 5'-0" (-0,+2').

(5) ℄ 4" x 1 ½" Vertical Slotted Hole at doweled girder end [labeled (D) on Bridge Layout]. Required for outside girder only or as shown on substructure details. Anchorage holes may be tapered (4 ¾" x 1 ⅝") at base. If holes are formed with sheet metal, forms may be left in place.

GIRDER ELEVATION

(6) Bars P (#6 x 15'-0") required in Tx62 and Tx70 girders. At the fabricator's option bars larger than #6 may be used. When L is less than 50 ft, Bars P are to be the same length as Bars T.

(7) Bars P (#6 x 15'-0") are only required in Tx28, Tx34, Tx40, Tx46, and Tx54 girders when "e" at girder ends exceeds 0.25 x "D". At the fabricator's option bars larger than #6 may be used. When L is less than 50 ft, Bars P are to be the same length as Bars T.

(8) 1 ⅜" Clear Cover to Bars S.

(9) Space Bars A at 6" Max for girders requiring overhang bracket hangers. Space at 12" Max for all other girders. Tie to Bars R as necessary. See standard IGMS for "Deck Forming Notes".

(10) Based on 155 pcf total weight of concrete and reinforcing steel.

(11) Smooth trowel finish on the slab overhang side of exterior girder.

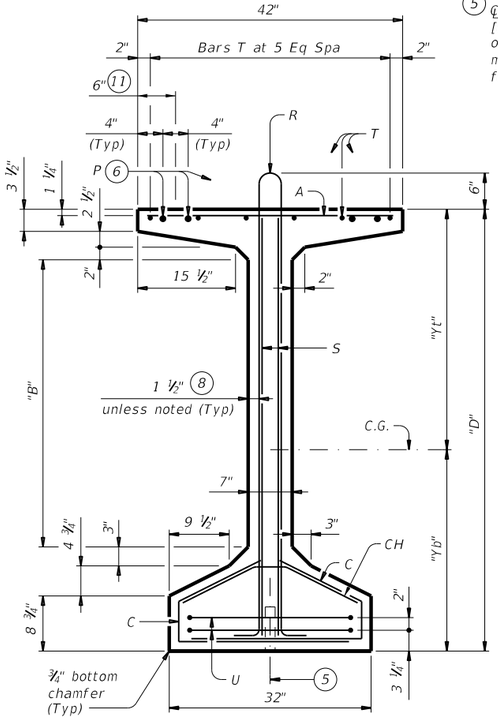

TYPE Tx62 & Tx70

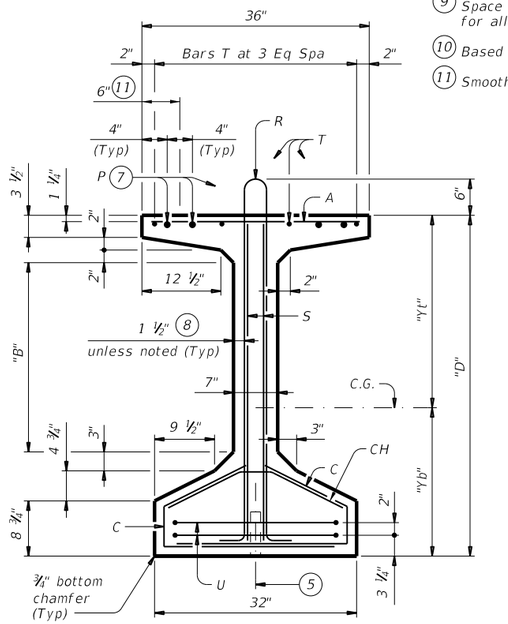

TYPE Tx46 & Tx54

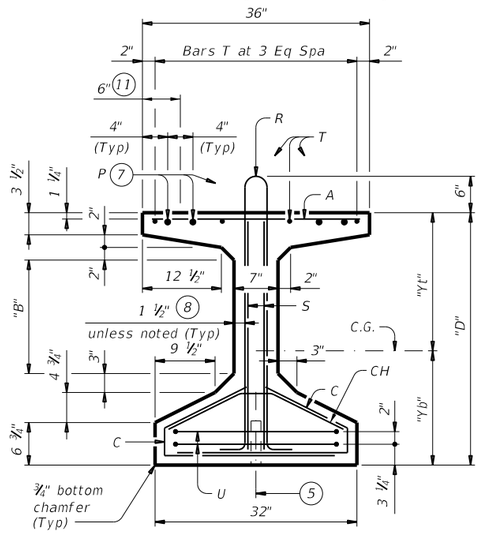

TYPE Tx28, Tx34 & Tx40

GIRDER DIMENSIONS AND SECTION PROPERTIES

Girder Type	"D" (in.)	"B" (in.)	"Yt" (in.)	"Yb" (in.)	Area (in.²)	"Ix" (in.⁴)	"Iy" (in.⁴)	Weight (10) (plf)
Tx28	28	6	15.02	12.98	585	52,772	40,559	630
Tx34	34	12	18.49	15.51	627	88,355	40,731	675
Tx40	40	18	21.90	18.10	669	134,990	40,902	720
Tx46	46	22	25.90	20.10	761	198,089	46,478	819
Tx54	54	30	30.49	23.51	817	299,740	46,707	880
Tx62	62	37 ½"	33.72	28.28	910	463,072	57,351	980
Tx70	70	45 ½"	38.09	31.91	966	628,747	57,579	1,040

GENERAL NOTES:

Designed according to AASHTO LRFD Bridge Design Specifications.
Provide Class H concrete.
Provide Grade 60 reinforcing steel.
An equal area of deformed Welded Wire Reinforcement (WWR) (ASTM A1064) may be substituted for Bars A, C, R or T unless otherwise noted.
It is permissible for bars or strands to come in contact with materials used in forming anchor holes.

Cover dimensions are clear dimensions, unless noted otherwise.
Reinforcing bar dimensions shown are out-to-out of bar.

HL93 LOADING

SHEET 1 OF 2

Texas Department of Transportation

Bridge Division Standard

PRESTRESSED CONCRETE I-GIRDER DETAILS

IGD

FILE: igdstds1-19.dgn	DN: TxDOT	CK: JMH	DW: JTR	CK: TAR
©TxDOT August 2017	CONT	SECT	JOB	HIGHWAY
REVISIONS				WYM SPR
10-19: Added Bars C and CH full length for VC<= 20'	DIST	COUNTY		SHEET NO.
		WILLIAMSON		339

DISCLAIMER:
The use of this standard is governed by the "Texas Engineering Practice Act". No warranty of any kind is made by TxDOT for any purpose whatsoever. TxDOT assumes no responsibility for the conversion of this standard to other formats or for incorrect results or damages resulting from its use.

DATE: 3/30/2023 6:53:08 PM
FILE: c:\pw-of\pw-of-prod\quan.ha@aguirre-fields.com\d0226434\IGD.dgn

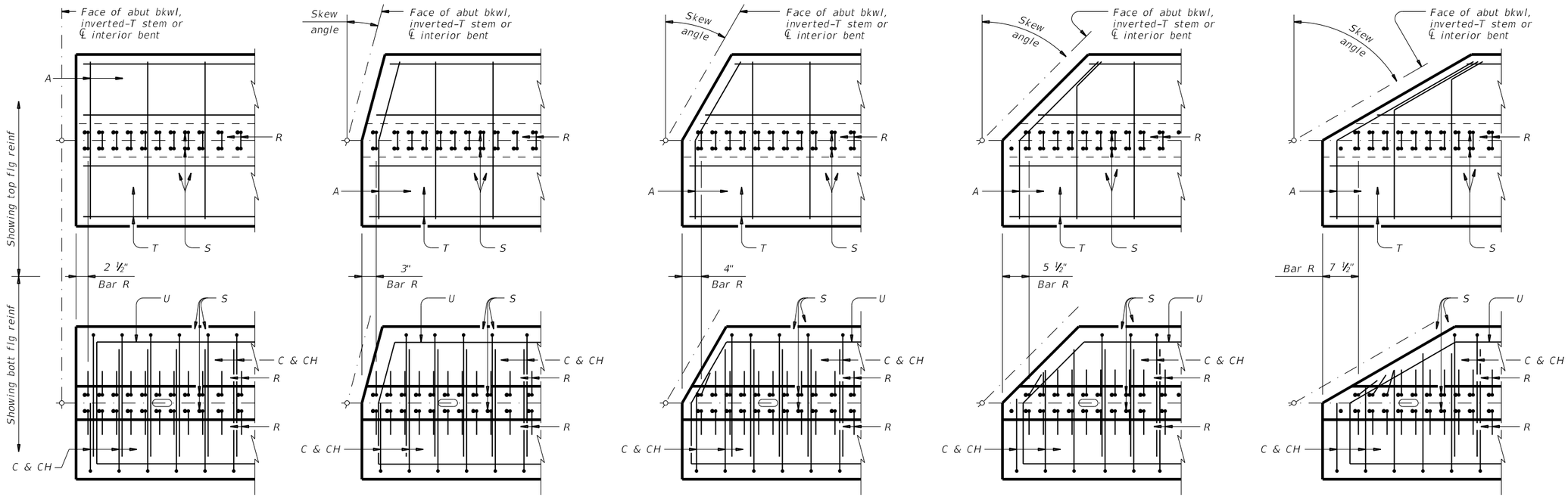

PLAN OF GIRDER ENDS (12)

To control top flange cracking that may occur during form removal, additional top flange reinforcing may be placed as shown in girder ends at the Fabricator's option.

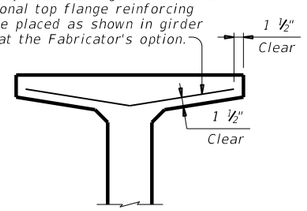

OPTIONAL TOP FLANGE REINFORCING DETAIL

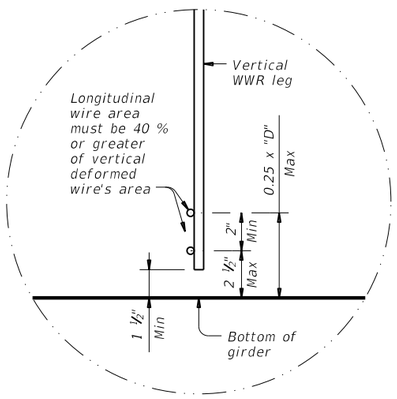

OPTIONAL WELDED WIRE REINFORCEMENT (WWR) DETAIL

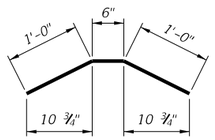

BARS CH (#4)

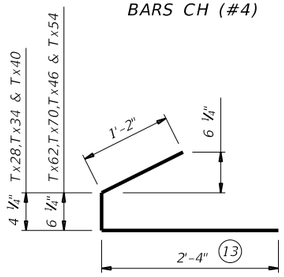

BARS C (#4)

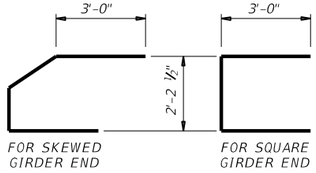

BARS U (#5)

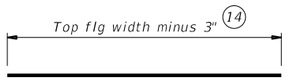

BARS A (#3)

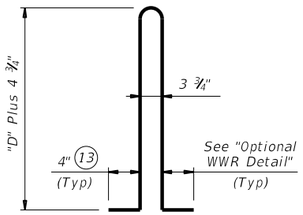

BARS R (#4) (16)



BARS S (#6)

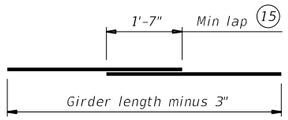

BARS T (#4)

(12) Reinforcing patterns shown are provided as guides to determine reinforcement placement in skewed ends. Place Bars S as close to girder end as cover requirements permit, which may prevent them to be bundled with Bars R.

(13) Bars may be cut or bent at skewed end as required.

(14) Increase as necessary for bars at skewed end.

(15) No portion of bar less than 10 ft.

(16) For Welded Wire Reinforcement (WWR) option, area of Bars R may be reduced in proportion to the increase in reinforcement yield strength over 60 ksi. Yield strength of WWR is limited to 75 ksi.

HL93 LOADING SHEET 2 OF 2

Texas Department of Transportation

Bridge Division Standard

PRESTRESSED CONCRETE I-GIRDER DETAILS

IGD

FILE: igdstds1-19.dgn	DN: TxDOT	CK: JMH	DW: JTR	CK: TAR
©TxDOT August 2017	CONT	SECT	JOB	HIGHWAY
REVISIONS				WYM SPR
10-19: Added Bars C and CH full length for VC<= 20'	DIST	COUNTY		SHEET NO.
		WILLIAMSON		340

DISCLAIMER:
The use of this standard is governed by the "Texas Engineering Practice Act". No warranty of any kind is made by TxDOT for any purpose whatsoever. TxDOT assumes no responsibility for the conversion of this standard to other formats or for incorrect results or damages resulting from its use.

DATE: 3/30/2023 6:53:22 PM
FILE: c:\pw-df\pw-of-prod\juan.hoaguirre-fields.com\d0226434\IGMS.dgn

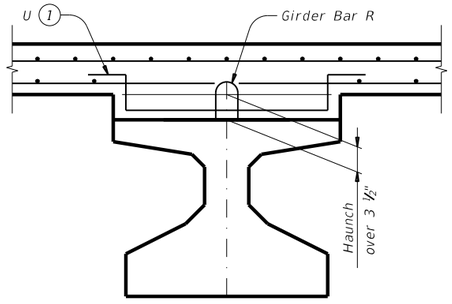

HAUNCH REINFORCING DETAIL

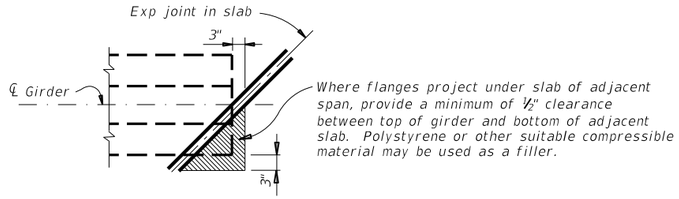

TREATMENT AT GIRDER END FOR SKEWED SPANS

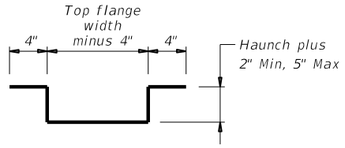

BARS U (#4)

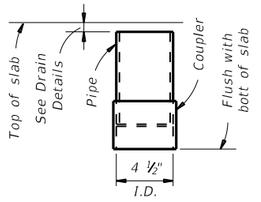

C-I-P DRAIN DETAIL (2)

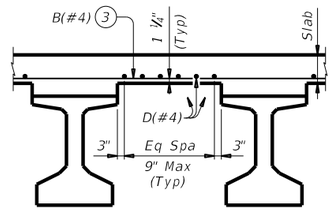

TYPICAL PART TRANSVERSE SLAB SECTION WITHOUT PCP (4)

Top reinforcing steel not shown for clarity.

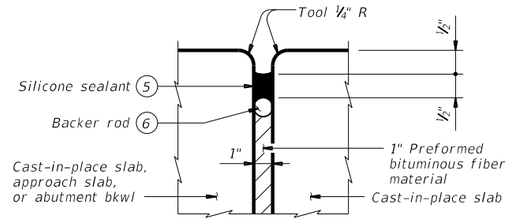

TYPE A JOINT DETAIL (7)

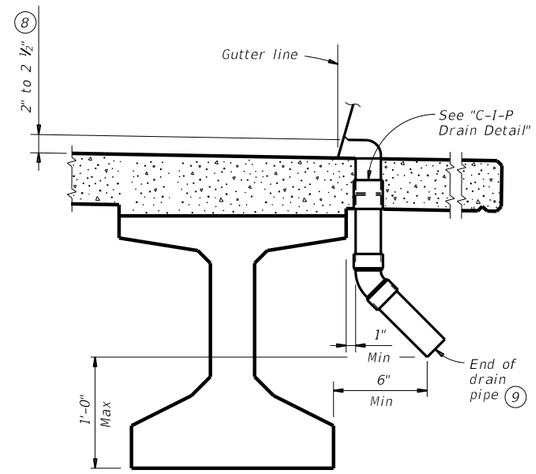

DRAIN DETAIL (10)

(1) Space Bars U with girder Bars R in all areas where measured haunch exceeds 3 ½".

(2) Roughen outside of PVC with coarse rasp or equal to ensure bond with cast-in-place concrete.

(3) Bars B(#4) spaced at 9" Max with 2" end cover. Overhang option, Contractor's may end alternating bars B(#4) at centerline outside girder.

(4) Provide Grade 60 reinforcing steel. Provide bar laps, where required, as follows:
Uncoated ~ #4 = 1'-7"
Epoxy coated ~ #4 = 2'-5"

(5) Class 7 silicone sealant that conforms to DMS-6310. Install when ambient temperature is between 55°F and 85°F and rising. Engineer to determine allowable hours for sealant application.

(6) 1 ¼" backer rod must be compatible with joint sealant. Use of multiple pieces to create a backer rod cross section is not permitted. Top of backer rod must be convex as shown.

(7) The maximum distance between Type A expansion joints is 100'. See Bridge Layout for location of joints.

(8) Drain entrance formed in rail or sidewalk.

(9) Water may not be discharged onto girders.

(10) All drain pipe and fittings to be 4" diameter (Sch 40) PVC. See Item 481 "Pipe for Drains" for pipe, connections and solvent welding. Bend reinforcing steel to clear PVC 1". Drain length and location is as directed by the Engineer. Drains are not permitted over roadways or railways, or within 10'-0" of bent caps. Degrease outside of exposed PVC, apply acrylic water base primer, then coat with same surface finishing material as used for outside girder face. Variations of the above designs, as required for the type of rail used and its location on the structure, may be installed with the approval and direction of the Engineer.

GENERAL NOTES:

Designed according to AASHTO LRFD Bridge Design Specifications.

Payment for Type A joint will be as per Item 454, "Bridge Expansion Joints."

All other items (reinforcing steel, drains, etc.) shown on this sheet are subsidiary to other bid items.

Cover dimensions are clear dimensions, unless noted otherwise.

Reinforcing bar dimensions shown are out-to-out of bar.

DECK FORMWORK NOTES:

Overhang bracket hangers are limited to a safe working load of 3,600 lbs, applied to and along the axis of a coil rod at 45 degrees from vertical, regardless of higher loads permitted by hanger manufacturers. Do not place a hanger less than 12" from girder end. Space hangers accordingly.

SHEET 1 OF 2

Texas Department of Transportation

Bridge Division Standard

MISCELLANEOUS SLAB DETAILS

PRESTR CONCRETE I-GIRDERS

IGMS

FILE: igmssts1-19.dgn	DN: TxDOT	CK: TxDOT	DW: JTR	CK: TxDOT
©TxDOT August 2017	CONT	SECT	JOB	HIGHWAY
REVISIONS				WYM SPR
10-19: Modified Note 7. Type A now a pay item.	DIST	COUNTY		SHEET NO.
		WILLIAMSON		341

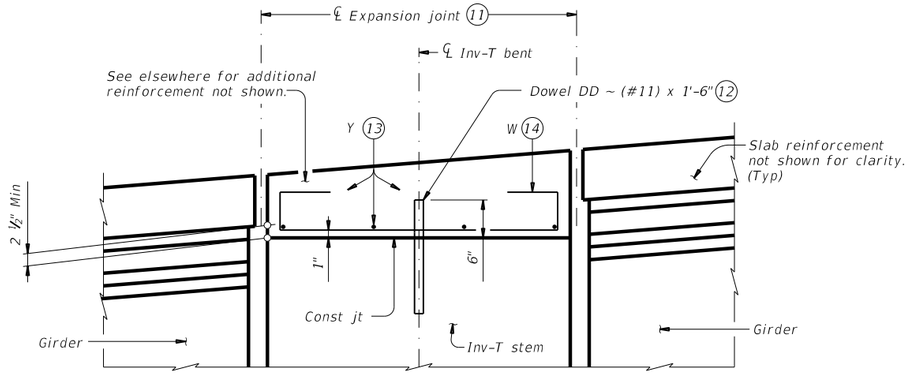

SHOWING EXPANSION JOINTS

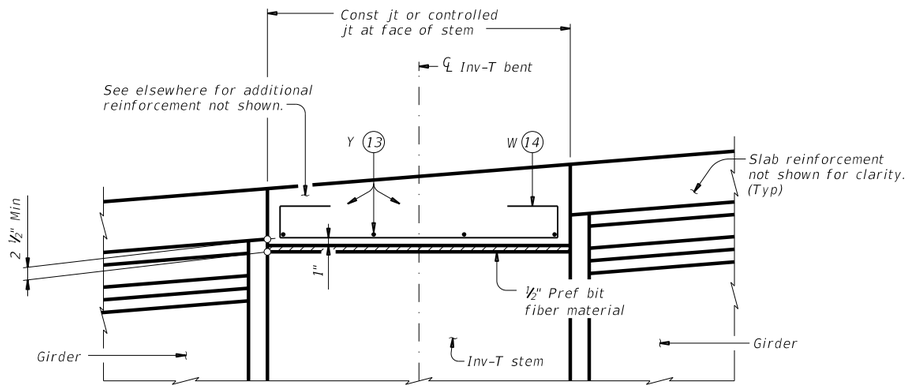

SHOWING CONST JTS OR CONTROLLED JTS

REINFORCEMENT OVER INV-T BENTS

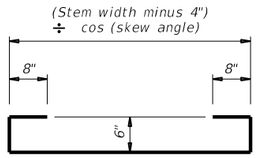

BARS W (#4)

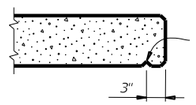

DRIP BEAD DETAIL

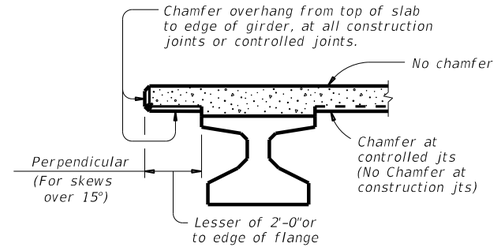

CHAMFER LIMITS DETAIL (15)

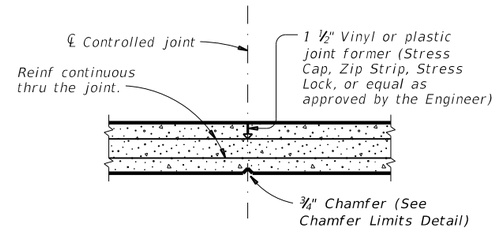

CONTROLLED JOINT DETAIL

(Saw-cutting is not allowed)

(11) See Layout for joint type.

(12) Dowels DD (#11) spaced at 5 Ft Max. See Inv-T bents for quantity and location.

(13) Space Bars Y (#4) at 12" Max. Use 2" end cover. Number of Bars Y must satisfy spacing limit. Place parallel to bent.

(14) Space Bars W at 12" Max (3" from end of cap). Tilt if necessary to maintain cover requirements. Place parallel to longitudinal slab reinforcement.

(15) See Span details for type of joint and joint locations.

DISCLAIMER:
The use of this standard is governed by the "Texas Engineering Practice Act". No warranty of any kind is made by TxDOT for any purpose whatsoever. TxDOT assumes no responsibility for the conversion of this standard to other formats or for incorrect results or damages resulting from its use.

DATE: 3/30/2023 6:53:23 PM
FILE: c:\pw-of\pw-of-prod\quan.ha@aguirre-fields.com\d0226434\IGMS.dgn

SHEET 2 OF 2

Texas Department of Transportation | Bridge Division Standard

MISCELLANEOUS SLAB DETAILS
PRESTR CONCRETE I-GIRDERS

IGMS

FILE: igmssts1-19.dgn	DN: TxDOT	CK: TxDOT	DW: JTR	CK: TxDOT		
©TxDOT August 2017	CONT	SECT	JOB	HIGHWAY		
REVISIONS				WYM SPR		
10-19: Modified Note 7, Type A now a pay item.	DIST	COUNTY		SHEET NO.		
		WILLIAMSON		342		

DISCLAIMER:
The use of this standard is governed by the "Texas Engineering Practice Act". No warranty of any kind is made by TxDOT for any purpose whatsoever. TxDOT assumes no responsibility for the conversion of this standard to other formats or for incorrect results or damages resulting from its use.

DATE: 3/30/2023 6:53:37 PM
FILE: c:\pw-of\pw-of-prod\quan.hdaguirre-fieldsdata.com\d0226434\IGSK.dgn

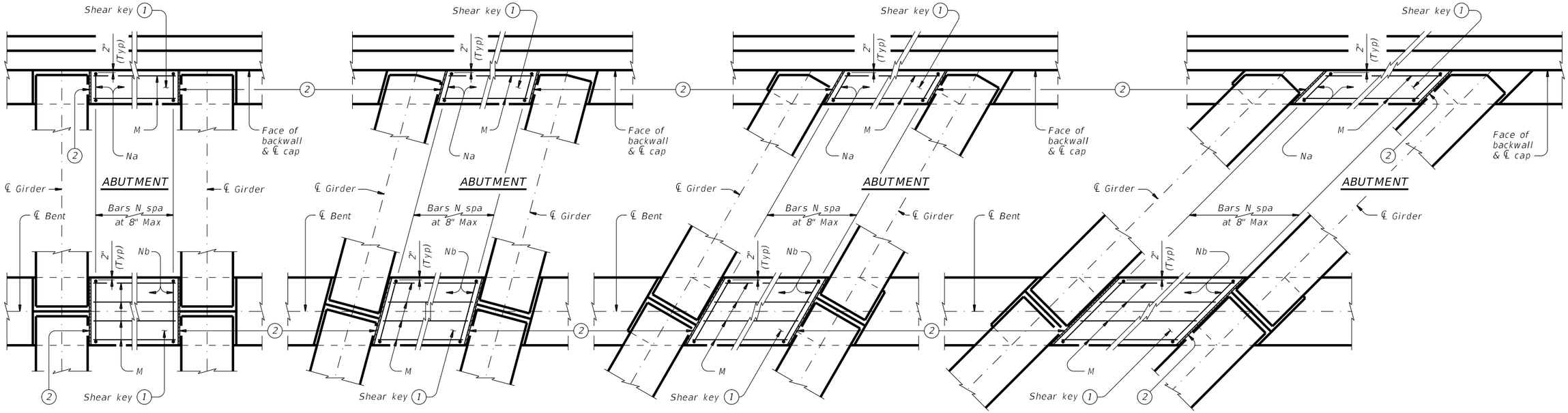

PARTIAL PLANS WITH NO SKEW

Showing shear keys on 3'-6" wide caps. 4'-0" caps similar.

PARTIAL PLANS WITH 15° SKEW

Showing shear keys on 3'-6" wide caps. 4'-0" caps similar.

PARTIAL PLANS WITH 30° SKEW

Showing shear keys on 3'-6" wide caps. 4'-0" caps similar.

PARTIAL PLANS WITH 45° SKEW

Showing shear keys on 3'-6" wide caps. 4'-0" caps similar.

(1) Place shear keys on the upstream side of structure between outside girder and next adjacent girder, unless shown otherwise on plans.

(2) UHMW polyethylene wear pad. (Typ)

(3) Leave a ¼" gap plus or minus between girder and face of wear pad. Cast wear pad with shear key, smooth side facing girder. Care must be taken to keep concrete from flowing under girder. Slope top of shear keys in accordance with Item 420.4.9, "Treatment and Finishing of Horizontal Surfaces."

(4) Measure at higher bearing seat elevation forward or back. Dimension based on typical bearing pad and bearing seat. Increase as necessary to maintain 5" overlap.

(5) With No Skew = 1'-8 ¼", measured along ℄ cap.
With Skew = 1'-8 ¼" ✱ Cos Skew, measured along ℄ cap.

(6) With No Skew = 1'-4 ¼", measured along ℄ cap.
With Skew = 1'-4 ¼" ✱ Cos Skew, measured along ℄ cap.

(7) Face of UHMW polyethylene wear pad. Smooth side of pad facing girder.

(8) Abutments = ½ Cap width.
Interior bents = Cap width.

(9) Abutments = ½ Cap width ✱ Cos Skew.
Interior bents = Cap width ✱ Cos Skew.

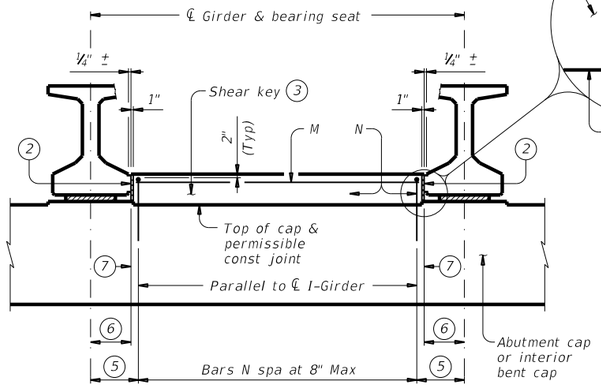

PARTIAL ELEVATION OF ABUTMENT OR INTERIOR BENT CAP (1)

Showing shear key with girder Type Tx46. Other I-Girder types similar.

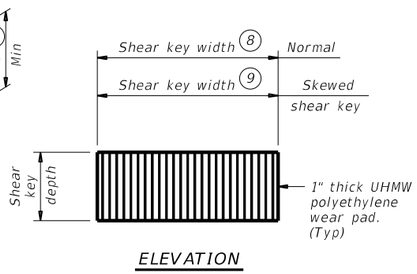

ULTRA HIGH MOLECULAR WEIGHT (UHMW) POLYETHYLENE WEAR PAD DETAILS

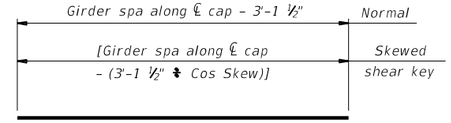

BARS M (#5)

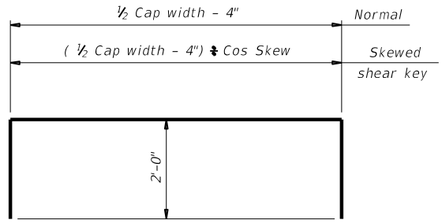

BARS Na (#5)
(For abutments)

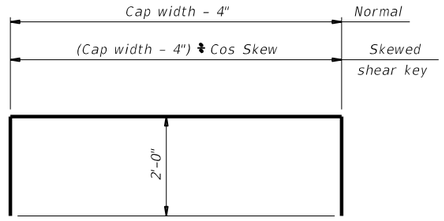

BARS Nb (#5)
(For interior bents)

CONSTRUCTION NOTES:

Provide Class "C" concrete (f'c = 3,600 psi). Provide Class "C" (HPC) if shown elsewhere on the plans.
Provide Grade 60 reinforcing steel.
Provide epoxy coated reinforcing steel for shear key if abutment or interior bent reinforcing steel is epoxy coated.
Provide Ultra High Molecular Weight (UHMW) polyethylene wear pads in accordance with ASTM D6712.

GENERAL NOTES:

Designed according to AASHTO LRFD Bridge Design Specifications.
Details showing skew are drawn showing right forward skew. See Bridge Layout for actual skew direction.
These details are limited to bridges skewed 45 degrees and less.
This standard is only applicable for I-Girders.
Modify details for bearing conditions, and girder spacing not shown on this standard. Details do not account for sole plate or pedestal bearing seat.
Include shear key concrete in abutment or bent concrete for payment.
UHMW polyethylene wear pads are subsidiary to Class "C" concrete.

Cover dimensions are clear dimensions, unless noted otherwise.
Reinforcing bar dimensions shown are out-to-out of bar.

Texas Department of Transportation

Bridge Division Standard

SHEAR KEY DETAILS
PRESTR CONCRETE I-GIRDERS

IGSK

FILE: igskstds-17.dgn	DN: TxDOT	CK: TxDOT	DW: JTR	CK: AES
©TxDOT August 2017	CONT	SECT	JOB	HIGHWAY
REVISIONS				WYM SPR
	DIST	COUNTY		SHEET NO.
		WILLIAMSON		343

DISCLAIMER:
The use of this standard is governed by the "Texas Engineering Practice Act". No warranty of any kind is made by TxDOT for any purpose whatsoever. TxDOT assumes no responsibility for the conversion of this standard to other formats or for incorrect results or damages resulting from its use.

DATE: 3/30/2023 6:53:52 PM
FILE: c:\pw-df\pw-of-prod\guan.ho@aguirre-fields.com\d0226434\IGTS.dgn

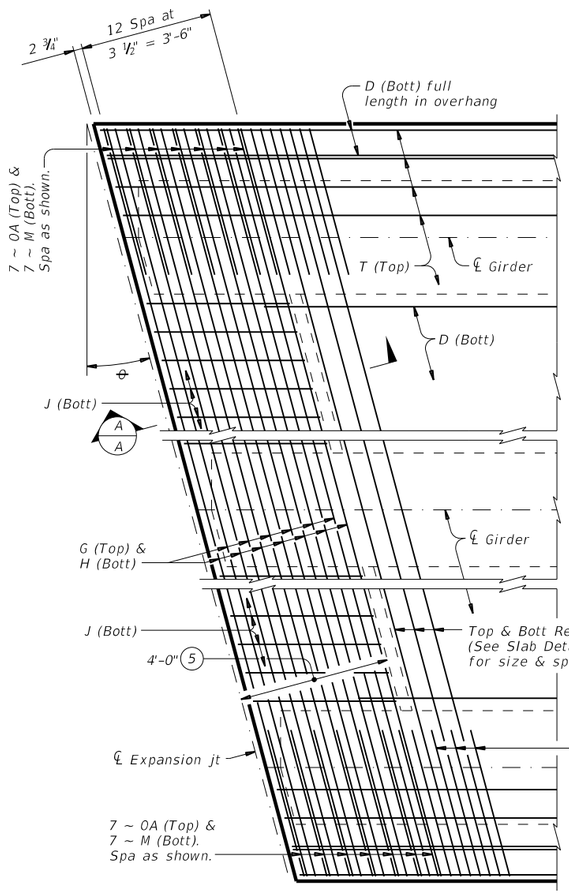

PARTIAL PLAN FOR SLABS WITHOUT BREAKBACK

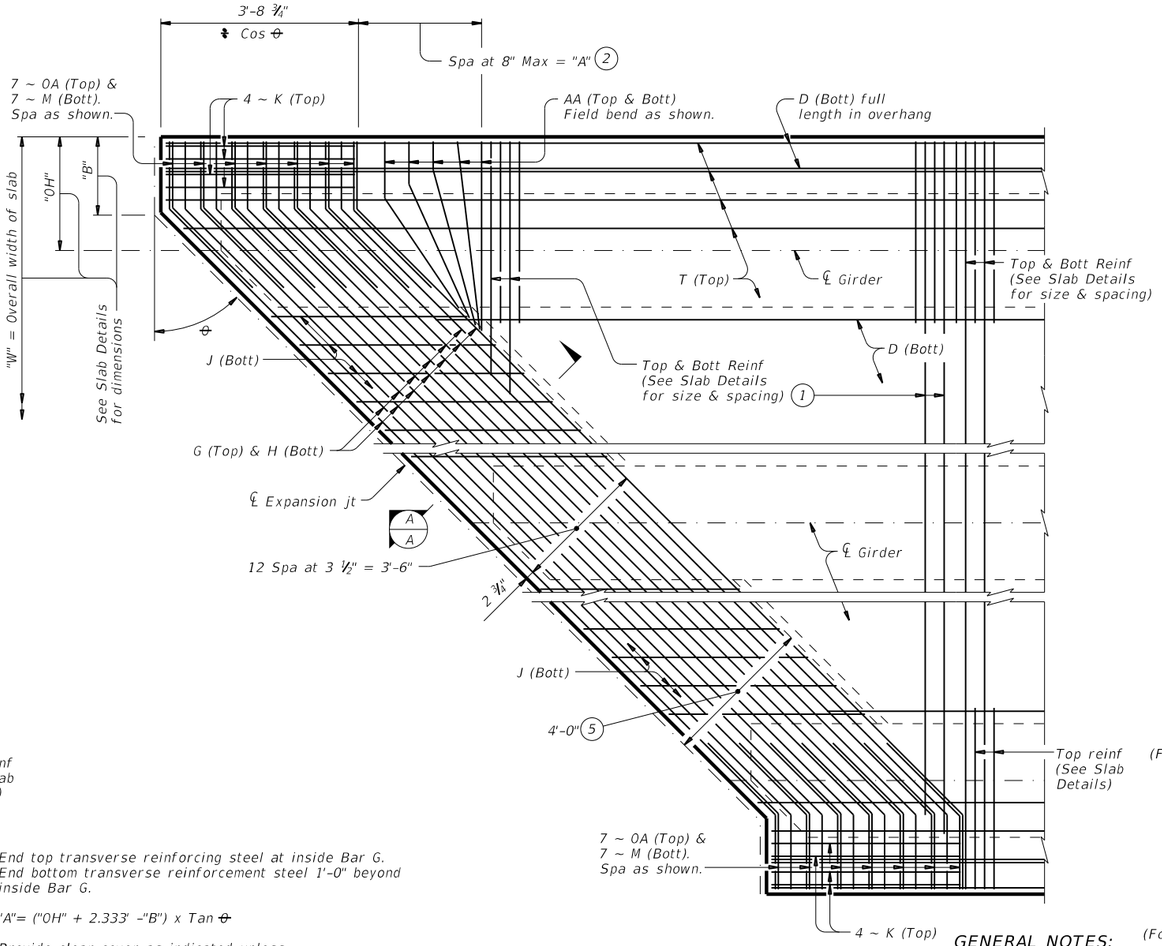

PARTIAL PLAN FOR SLABS WITH BREAKBACK

1. End top transverse reinforcing steel at inside Bar G. End bottom transverse reinforcement steel 1'-0" beyond inside Bar G.
2. "A"= ("OH" + 2.333' -"B") x Tan θ
3. Provide clear cover as indicated unless otherwise shown on Span Details.
4. Only required on slabs with breakbacks.
5. Thickened slab end dimensioned perpendicular to face of bkwl, centerline interior bent or face of inverted-T stem.

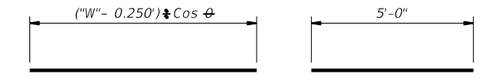

BARS G (#4)
(For slabs without breakbacks)

BARS K (#4) (4)

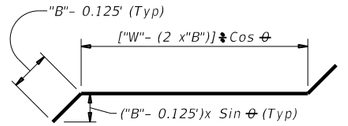

BARS G (#4)
(For slabs with breakbacks)

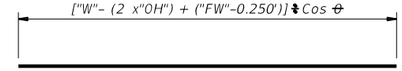

"FW" = girder's top flange width (ft)

BARS H (#4)



BARS AA (#5) (4)

BARS J (#4)

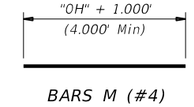

BARS M (#4)
(For slabs without breakbacks)

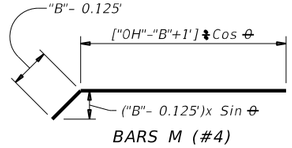

BARS M (#4)
(For slabs with breakbacks)

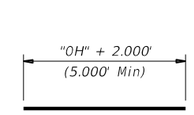

BARS OA (#5)
(For slabs without breakbacks)

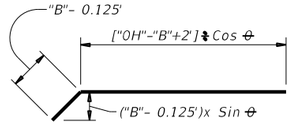

BARS OA (#5)
(For slabs with breakbacks)

GENERAL NOTES:

Designed according to AASHTO LRFD Bridge Design Specifications.
These details are restricted to Prestressed Concrete I-Girder Spans.
These details are to be used in conjunction with the Span Details and PCP standard (if prestressed concrete panels are used).
When Option 2 from PCP standard is used, provide Bars AA, G, K and OA in the slab.

MATERIAL NOTES:

Provide Grade 60 reinforcing steel.
If slab reinforcing steel is shown on the Slab Details to be epoxy coated, then Bars AA, G, K, H, J, M and OA must be epoxy coated.
Provide bar laps, where required, as follows:
Uncoated ~ #4 = 1'-7"
Epoxy Coated ~ #4 = 2'-5"

Cover dimensions are clear dimensions, unless noted otherwise.
Reinforcing bar dimensions shown are out-to-out of bar.

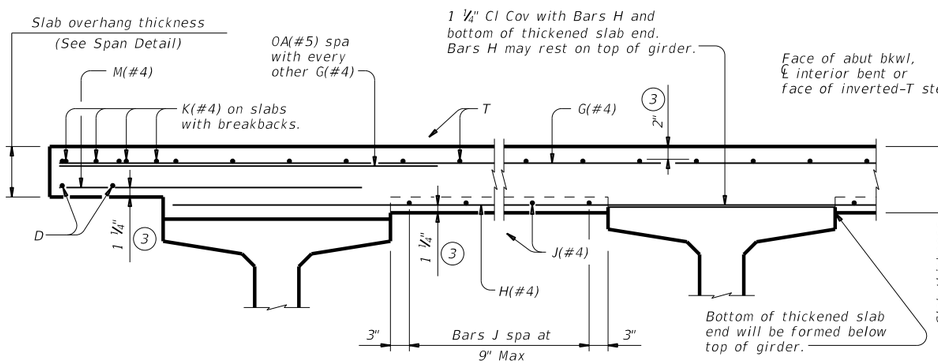

2" AND MORE OF HAUNCH — LESS THAN 2" OF HAUNCH

TYPICAL TRANSVERSE SECTION

(Showing Prestressed Conc I-Girders at ℄ Brg)

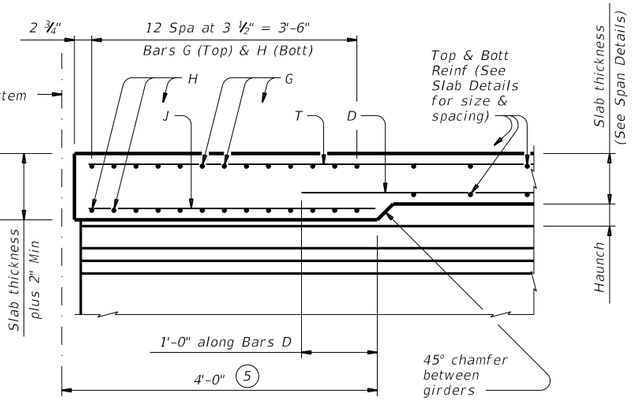

SECTION A-A

(Showing with 2" and more of haunch)

HL93 LOADING

Texas Department of Transportation — Bridge Division Standard

THICKENED SLAB END DETAILS

PRESTRESSED CONCRETE I-GIRDER SPANS

IGTS

FILE: igtssts1-17.dgn	DN: TxDOT	CK: TxDOT	DW: JTR	CK: TxDOT
©TxDOT August 2017	CONT	SECT	JOB	HIGHWAY
REVISIONS				WYM SPR
	DIST	COUNTY		SHEET NO.
		WILLIAMSON		344

DISCLAIMER:
The use of this standard is governed by the "Texas Engineering Practice Act". No warranty of any kind is made by TxDOT for any purpose whatsoever. TxDOT assumes no responsibility for the conversion of this standard to other formats or for incorrect results or damages resulting from its use.

DATE: 3/30/2023 6:54:07 PM
FILE: c:\pw-of\pw-of-prod\quan.ha@aguirre-fields.com\d0226434\MEBR(C).dgn

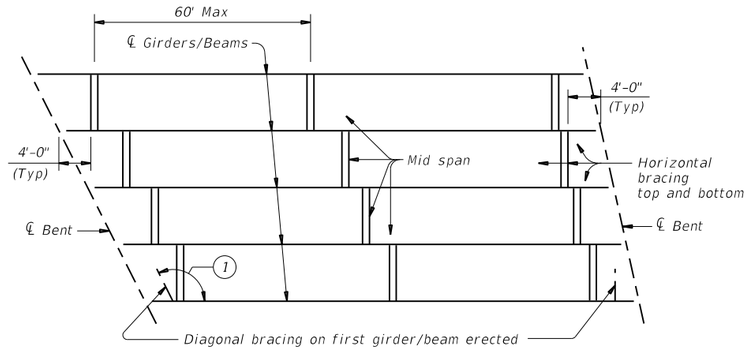

ERECTION BRACING

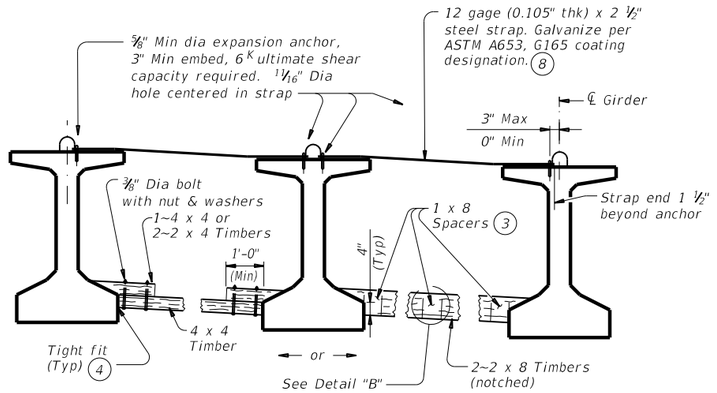

FOR ERECTION BRACING, OPTION 1

(This option is not allowed when slab is formed with PMDF or plywood.)

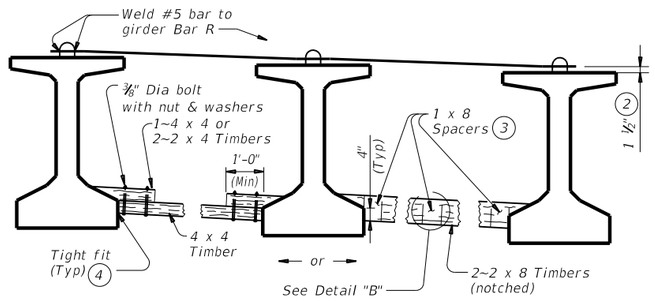

FOR ERECTION BRACING, OPTION 2

HORIZONTAL BRACING DETAILS (5)

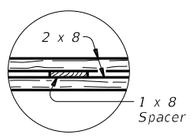

PLAN

DETAIL "B"

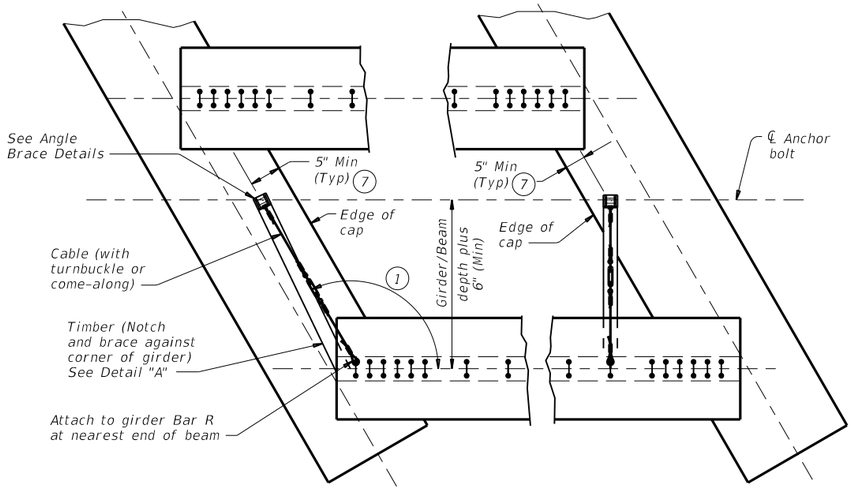

PLAN

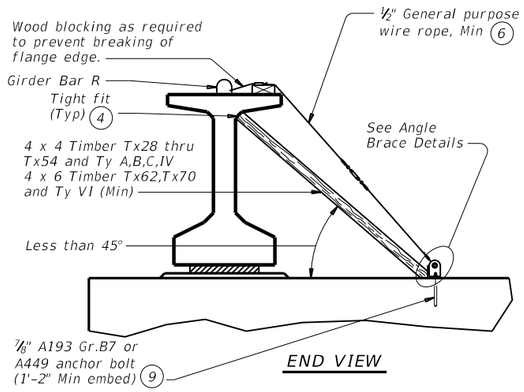

END VIEW

DIAGONAL BRACING DETAILS (5)

(To be used on both ends of the first girder/beam erected in the span in each phase.)

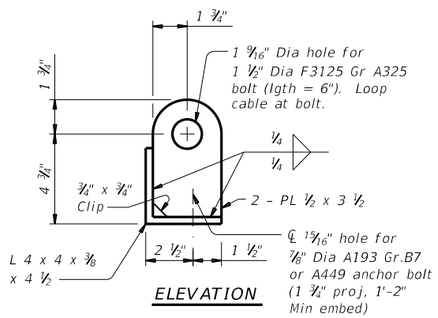

ELEVATION

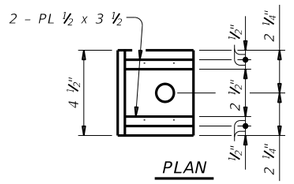

PLAN

ANGLE BRACE DETAILS

HAULING & ERECTION:

The Contractor's attention is directed to the possible lateral instability of prestressed concrete girders and beams over 130' long, especially during hauling and erection. The use of the following methods to improve stability is encouraged: Locate lifting devices at the maximum practical distance from girder ends; use external lateral stiffening devices during hauling and erection; lift with vertical lines using two machines; and take care in handling to minimize inertial and impact forces.

ERECTION BRACING:

Erection bracing details shown are considered the minimum for fulfilling the bracing requirements of Item 425.

Required erection bracing must be placed immediately after erection of each girder and remain in place until additional bracing as required for slab placement is in place. This standard is needed in all cases to meet requirements for Slab Placement Bracing.

PHASED CONSTRUCTION:

Place erection and slab placement bracing for all girders in a phase as shown in these details. For phases after first, also place erection and slab placement bracing between outer girder of completed phase and adjacent girder of current phase. When the phase construction joint is between girders, top bracing can be omitted.

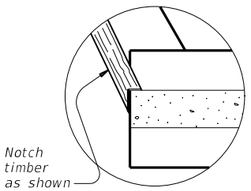

DETAIL "A"

(1) If angle shown exceeds 120 degrees, move diagonal brace to other side of girder/beam and place square to girder/beam. This may prevent exterior girder from being erected first.

(2) Place and weld #5 bars as shown during erection. If forming deck with prestressed panels, bars can be temporarily removed, one at a time, during panel erection. Re-install bar prior to additional panel erection. Bars can rest on panels and be bent down and welded to girder Bars R (See Sheet 2 of 2).

(3) Clear distance between spacers must not exceed 3'. Nail together with 16d nails.

(4) Use wedges as necessary to obtain tight fit. Nail wedges to timbers.

(5) Pressure treated landscape timbers can not be used.

(6) All hardware used with cable must be able to develop a minimum 25 kips breaking strength. Use thimbles at all loops in cable. Install cable clamps with saddles bearing against the live end and U-bolts bearing aginst the dead end.

(7) It is acceptable to tie anchor bolts to cap reinforcement.

(8) Prior to installing, field bend strap to lay flush on both girders' top flange and slope between flange tips.

(9) Anchor bolt may be drilled and epoxied in place. Provide 25k minimum pullout. Core drill hole.

Texas Department of Transportation

Bridge Division Standard

MINIMUM ERECTION AND BRACING REQUIREMENTS
PRESTRESSED CONCRETE I-GIRDERS AND I-BEAMS

MEBR(C)

FILE: mebcsts1-17.dgn	DN: TxDOT	CK: TxDOT	DW: TxDOT	CK: TxDOT
©TxDOT August 2017	CONT	SECT	JOB	HIGHWAY
REVISIONS				WYM SPR
	DIST	COUNTY		SHEET NO.
		WILLIAMSON		345

DISCLAIMER:
The use of this standard is governed by the "Texas Engineering Practice Act". No warranty of any kind is made by TxDOT for any purpose whatsoever. TxDOT assumes no responsibility for the conversion of this standard to other formats or for incorrect results or damages resulting from its use.

DATE: 3/30/2023 6:54:07 PM
FILE: c:\pw-df\pw-prod\quan.hoaguirre-fields.com\d0226434\MEBR(C).dgn

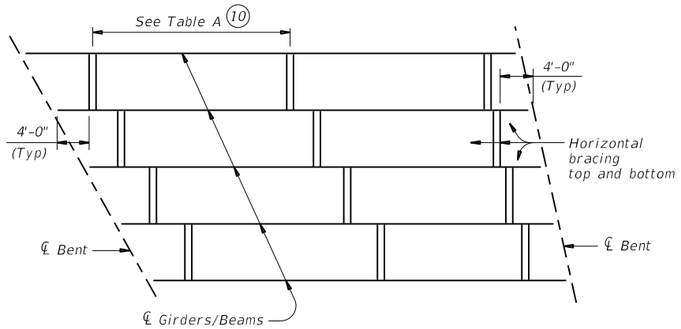

SLAB PLACEMENT BRACING

TABLE A

OPTION 1-RIGID BRACING (STEEL STRAP)

Girder or Beam Type	Maximum Bracing Spacing	
	Slab Overhang less than 4'-0" (11)	Slab Overhang 4'-0" and greater (11)
Tx28	¼ points	¼ points
Tx34	¼ points	¼ points
Tx40	¼ points	⅛ points
Tx46	¼ points	⅛ points
Tx54	¼ points	⅛ points
Tx62	¼ points	⅛ points
Tx70	¼ points	⅛ points
A	⅛ points	⅛ points
B	⅛ points	⅛ points
C	⅛ points	⅛ points
IV	¼ points	⅛ points
VI	¼ points	⅛ points

OPTION 2-FLEXIBLE BRACING (NO. 5 OVER PCP)

Girder or Beam Type	Maximum Bracing Spacing	
	Slab Overhang less than 4'-0" (11)	Slab Overhang 4'-0" and greater (11)
Tx28	¼ points	⅛ points
Tx34	¼ points	⅛ points
Tx40	¼ points	⅛ points
Tx46	¼ points	⅛ points
Tx54	¼ points	⅛ points
Tx62	¼ points	⅓ points
Tx70	¼ points	⅛ points
A	2.0 ft	1.5 ft
B	3.0 ft	2.0 ft
C	4.5 ft	2.0 ft
IV	¼ points	4.0 ft
VI	¼ points	4.0 ft

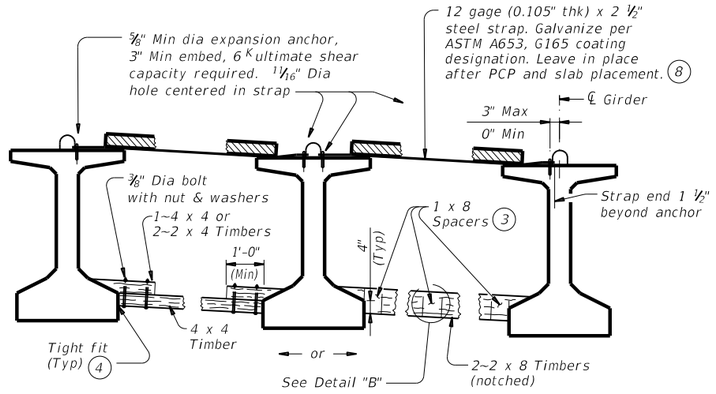

FOR SLAB PLACEMENT BRACING, OPTION 1 - RIGID

(Showing slab formed with PCP. This option is not allowed when slab is formed with PMDF or plywood.)

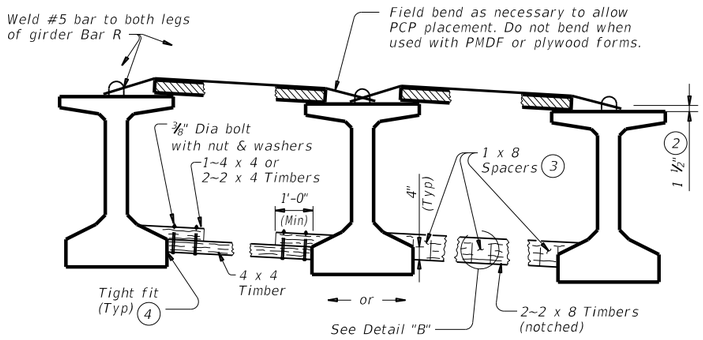

FOR SLAB PLACEMENT BRACING, OPTION 2 - FLEXIBLE

(Showing slab formed with PCP.)

HORIZONTAL BRACING DETAILS (5)

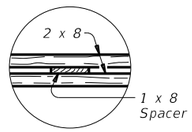

PLAN

DETAIL "B"

(2) Place and weld #5 bars as shown during erection. If forming deck with prestressed panels, bars can be temporarily removed, one at a time, during panel erection. Re-install bar prior to additional panel erection. Bars can rest on panels and be bent down and welded to girder Bars R.

(3) Clear distance between spacers must not exceed 3'. Nail together with 16d nails.

(4) Use wedges as necessary to obtain tight fit. Nail wedges to timbers.

(5) Pressure treated landscape timbers can not be used.

(8) Prior to installing, field bend strap to lay flush on both girders' top flange and slope between flange tips.

(10) Bracing spacing (¼ and ⅛ points) measured between first and last typical brace location.

(11) Measure slab overhang from centerline of girder or beam. When overhang varies in span, determine bracing spacing based on largest overhang.

SLAB PLACEMENT BRACING:

The details for slab placement bracing are considered minimum for fulfilling the requirements of Specification Items 422 and 425.

Required slab placement bracing must remain in place until slab concrete has attained a compressive strength of 3000 psi.

GENERAL NOTES:

Bracing details for spans longer than 150' are not provided. The Contractor must submit proposed bracing details for such conditions to the Engineer for approval prior to erection.

Systems equal to or better than those shown may be used provided details of such systems are submitted to and approved by the Engineer prior to erection.

Use of these systems or details does not relieve the Contractor of the responsibility for the adequacy of the bracing and the safety of the structure.

Removal of bracing for short periods of time to align girders and beams is permissible.

All turn-buckles, come-alongs, anchors and other connections must be capable of developing the full strength of the cable shown.

Furnish anchor bolts and nuts in accordance with Item 449, "Anchor Bolts".

Texas Department of Transportation

Bridge Division Standard

MINIMUM ERECTION AND BRACING REQUIREMENTS

PRESTRESSED CONCRETE I-GIRDERS AND I-BEAMS

MEBR(C)

FILE: mebcsts1-17.dgn	DN: TxDOT	CK: TxDOT	DW: TxDOT	CK: TxDOT
©TxDOT August 2017	CONT	SECT	JOB	HIGHWAY
REVISIONS				WYM SPR
	DIST	COUNTY		SHEET NO.
		WILLIAMSON		346

DISCLAIMER:
The use of this standard is governed by the "Texas Engineering Practice Act". No warranty of any kind is made by TxDOT for any purpose whatsoever. TxDOT assumes no responsibility for the conversion of this standard to other formats or for incorrect results or damages resulting from its use.

DATE: 3/30/2023 6:54:24 PM
FILE: c:\pw-df\pw-df-prod\qun.haeguirre-fields.com\d0226434\PCP.dgn

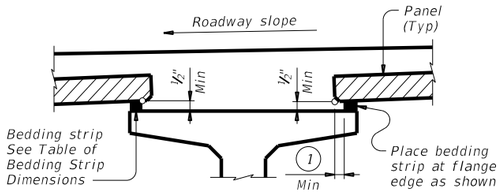

NORMAL GRADING DETAIL (3)

Showing prestressed concrete I-girders.
(Other beam types similar)

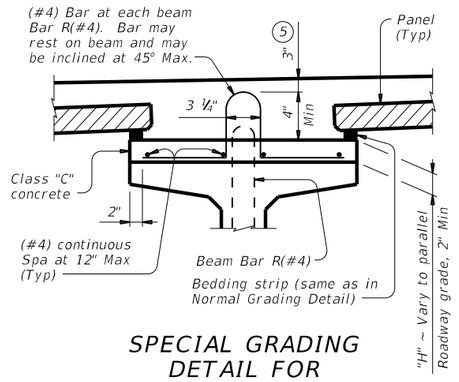

SPECIAL GRADING DETAIL FOR CONCRETE BEAMS

Showing prestressed concrete I-girders.
(Other beam types similar)

TABLE OF BEDDING STRIP DIMENSIONS		
WIDTH	HEIGHT (4)	
	Min	Max
1" (Min)	½"	2"
1 ¼"	½"	2 ½"
1 ½"	½"	3"
1 ¾"	½"	3 ½"
2"	½"	4"
2 ¼"	½"	4 ½" (2)
2 ½"	½"	5" (2)
2 ¾"	½"	5 ½" (2)
3" (Max)	½"	6" (2)

(1) 2" Min for I-giders, 1 ½" Min for all other beam types.

(2) Allowed for I-girders, not allowed on other beam types.

(3) To reduce the quantity of cast-in-place concrete, bedding strip thickness may be increased in ¼" increments. Bedding strips must be comprised of one layer. Bond bedding strips to the beams with an adhesive compatible with bedding strips. Bedding strips over 2.5" high may need to be bonded to panels. The same thickness strip must be used under any one panel edge and the maximum change in thickness between adjacent panels is ¼". Alternatively, bedding strips may be cut to grade. Panels may be supported by an alternate method, using a commercial product, if approved by the Engineer of Bridge Design, Bridge Division. If bedding strips exceed 6" high for I-Girders, 4" high for all other beam types, use Special Grading Detail for Concrete Beams or submit an alternate method to the Bridge Division for approval.

(4) Height must not exceed twice the width.

(5) Provide clear cover as indicated unless otherwise shown on Span Details.

(6) See Span Details and Thickened Slab End Details for top slab reinforcement and clear cover. Transverse top slab reinforcement may rest on top of prestressed concrete panels if necessary to maintain clear cover.

(7) Space Bars UP(#4) with Beam Bars R(#4) in all areas where measured haunch exceeds 3 ½" with I-girders, and 3" for all other beam types. Epoxy coating for Bars UP is not required.

(8) Do not locate construction joints on top of a panel.

(9) Butt adjacent bedding strips together with adhesive. Cut v-notches, approx ¼" deep, in the top of the bedding strips at 8' o.c..

CONSTRUCTION NOTES:

Erected panels must bear uniformly on bedding strips of extruded polystyrene placed along top flange edges.

Placing panels to minimize joint openings is recommended.

If additional blocking is needed, special grading details for supporting the panels and extra reinforcing between beam and slab will be considered subsidiary to deck construction.

Bars U, shown on PCP-FAB, may be bent over or cut off if necessary.

Care must be taken to ensure proper cleaning of construction debris and consolidation of concrete material under the edges of the panels. Bedding strips must be placed at beam flange edges so that adequate space is provided for the mortar to flow a minimum of 1 ½" under the panels as the slab concrete is placed.

To allow the proper amount of mortar to flow between beam and panel, the minimum vertical opening must be at least ½". Roadway cross-slope reduces the opening available for entry of the mortar. Bedding strips varying in thickness across the beam are therefore required.

For clear span between U-beams less than or equal to 18", see Permissible Slab Forming Detail on Miscellaneous Slab Detail sheets, UBMS.

MATERIAL NOTES:

Provide Grade 60 reinforcing steel in the cast-in-place slab. See Table of Reinforcing Steel for size and spacing of reinforcement.

If the top and bottom layer of reinforcing steel is shown on the Span Details to be epoxy coated, then the D, E, P, & Z bars must be epoxy coated.

Provide bar Laps, where required, as follows:

Uncoated ~ #4 = 1'-7"
Epoxy Coated ~ #4 = 2'-5"

GENERAL NOTES:

Designed according to AASHTO LRFD Bridge Design Specifications.

Panel placement may follow either Option 1 or Option 2 except Option 1 must be used if the skew exceeds 45 degrees.

Use of Prestressed Concrete Panels is not permitted for horizontally curved steel plate or tub girders. See Span Details for other possible restrictions on their use.

These details are to be used in conjunction with the Span Details, PCP-FAB and other applicable standard drawings.

When panel support (bedding strips) deviates from what is shown herein, provide details signed and sealed by a professional Engineer.

Any additional reinforcement or concrete required on this standard is considered subsidiary to the bid Item "Reinforced Concrete Slab".

Cover dimensions are clear dimensions, unless noted otherwise.
Reinforcing bar dimensions shown are out-to-out of bar.

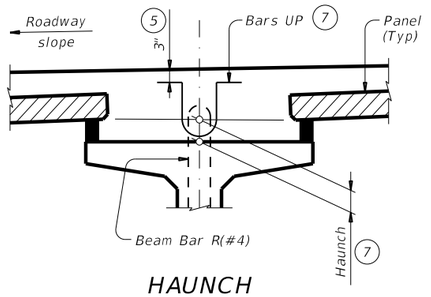

HAUNCH REINFORCING DETAIL

Showing prestressed concrete I-girders.
(Other beam types similar)

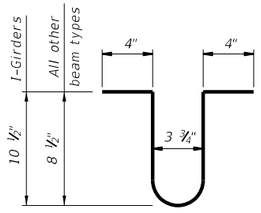

BARS UP (#4) (7)

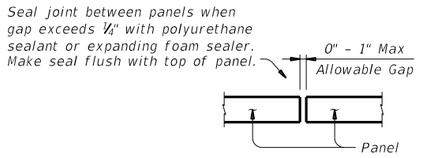

PANEL JOINTS

(Panel reinforcing not shown for clarity.
The gap cannot be considered as a panel fabrication tolerance. Adjust panel placement to minimize joint openings.)

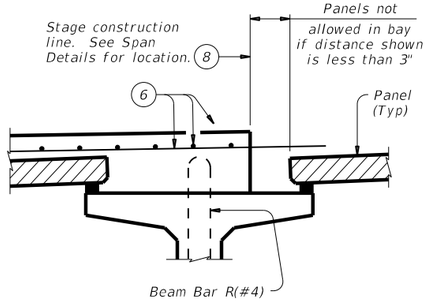

PRESTR CONC I-GIRDERS

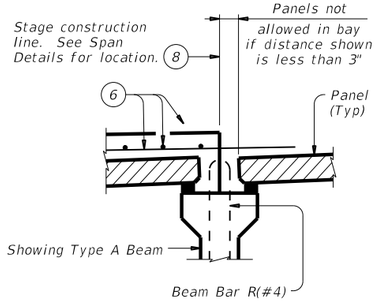

PRESTR CONC I-BEAMS

STAGE CONSTRUCTION LIMITATIONS

(Other beam types similar)

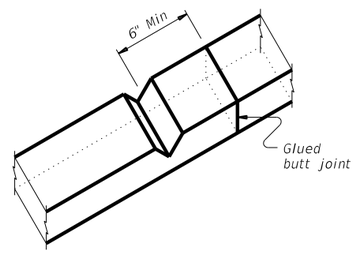

BEDDING STRIP DETAIL (9)

HL93 LOADING SHEET 1 OF 4

Texas Department of Transportation | Bridge Division Standard

PRESTRESSED CONCRETE PANELS DECK DETAILS

PCP

FILE: pcpstde1-19.dgn	DN: TxDOT	CK: TxDOT	DW: JTR	CK: JMH
©TxDOT April 2019	CONT	SECT	JOB	HIGHWAY
REVISIONS				WYM SPR
	DIST	COUNTY		SHEET NO.
		WILLIAMSON		347

DISCLAIMER:
The use of this standard is governed by the "Texas Engineering Practice Act". No warranty of any kind is made by TxDOT for any purpose whatsoever. TxDOT assumes no responsibility for the conversion of this standard to other formats or for incorrect results or damages resulting from its use.

DATE: 3/30/2023 6:54:25 PM
FILE: c:\pw-of\pw-of-prod\quan.ha@aguirre-fields.com\d0226434\PCP.dgn

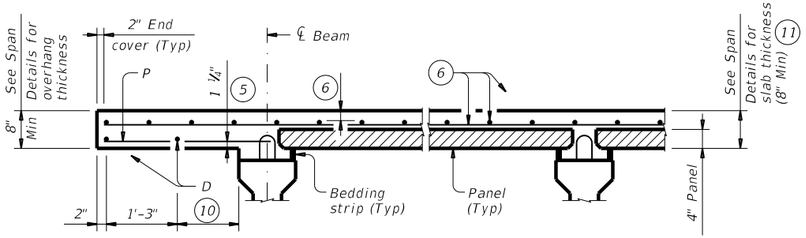

PRESTRESSED CONCRETE I-BEAMS

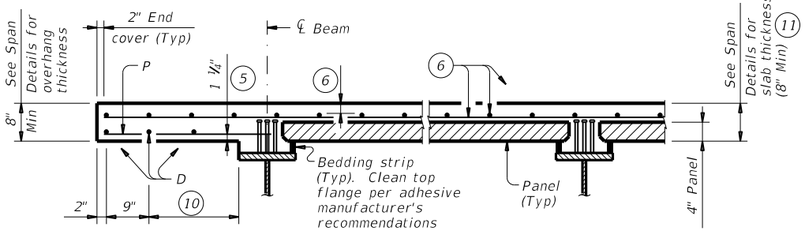

STEEL BEAMS

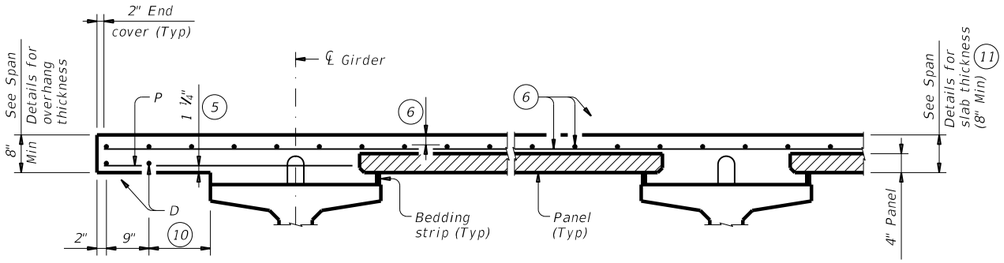

PRESTRESSED CONCRETE I-GIRDERS

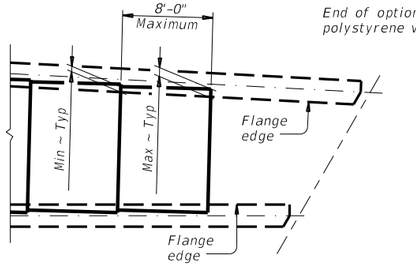

AT FLARED BEAMS OR GIRDERS

See PCP-FAB standard for Min and Max dimensions based on beam/girder type.

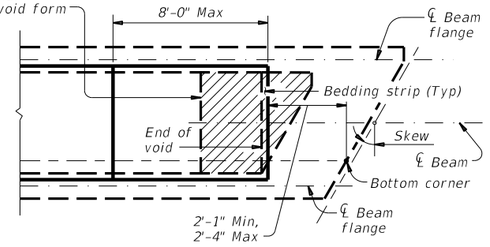

OVER CONC U-BEAMS

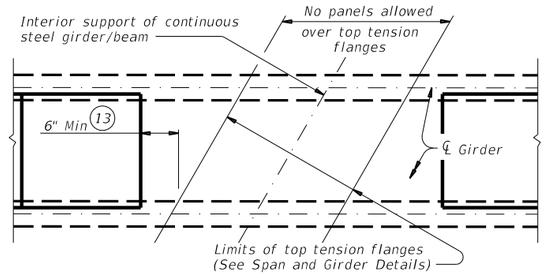

AT INT SUPPORTS OF CONTINUOUS STEEL GIRDERS

PART PLANS OF PANEL PLACEMENT

(5) Provide clear cover as indicated unless otherwise shown on Span Details.

(6) See Span Details and Thickened Slab End Details for top slab reinforcement and clear cover. Transverse top slab reinforcement may rest on top of prestressed concrete panels if necessary to maintain clear cover.

(9) Butt adjacent bedding strips together with adhesive. Cut v-notches, approx ¼" deep, in the top of the bedding strips at 8" o.c..

(10) Equally space additional bar if more than 1'-3" Max.

(11) The actual thickness constructed may exceed the slab thickness shown on the Span Details but the extra thickness may be no more than 2" (1" for prestressed concrete U-beams and steel beams). Bearing seat elevations or finished grade may be adjusted.

(12) Field adjust Bars Z1(#4) to match actual slope of slab overhangs. Width of slab overhang will vary along span with curved slab edges. Adjust Bar Z1(#4) dimensions to maintain proper cover. Bars Z2(#4) are located at Inverted-Tee stems only.

(13) Location of concrete placement sequence boundaries and bolted field splices should be considered by the contractor in determining panel limits.

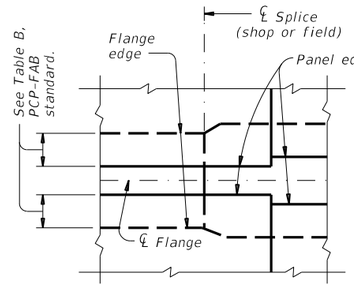

PLAN AT SPLICE

(Showing steel beams with flange width transition)

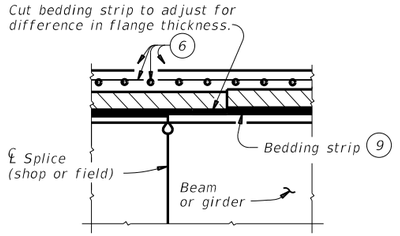

ELEVATION AT SPLICE

(Showing steel beams with different flange thickness)

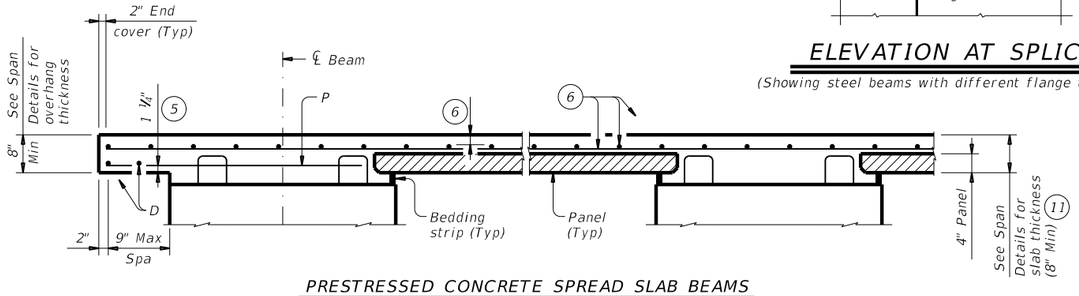

PRESTRESSED CONCRETE SPREAD SLAB BEAMS

Bars P over exterior beams are still required when no overhang is used. In this case, only one Bar D, 2" from slab edge, is required.

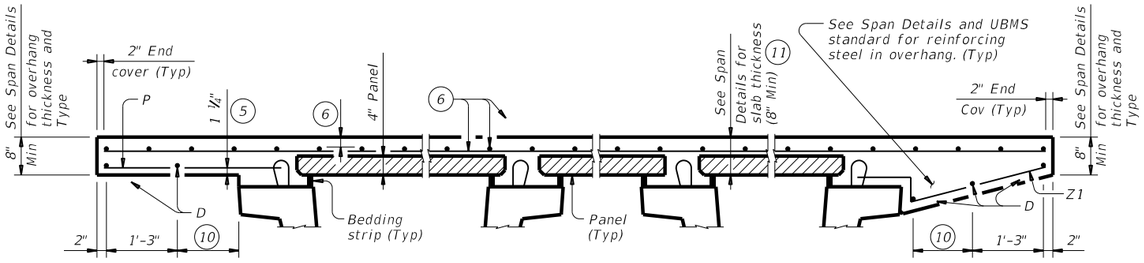

NORMAL OVERHANG WITH PRESTR CONC U-BEAMS

TYPICAL PART TRANSVERSE SECTIONS

SLOPED OVERHANG WITH PRESTR CONC U-BEAMS

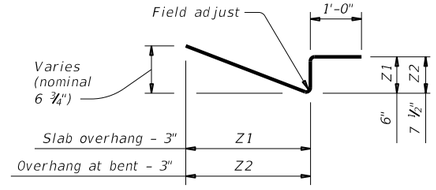

BARS Z (#4) (12)

HL93 LOADING SHEET 2 OF 4

Texas Department of Transportation

Bridge Division Standard

PRESTRESSED CONCRETE PANELS
DECK DETAILS

PCP

FILE: pcpstde1-19.dgn	DN: TxDOT	CK: TxDOT	DW: JTR	CK: JMH
©TxDOT April 2019	CONT	SECT	JOB	HIGHWAY
REVISIONS				WYM SPR
	DIST	COUNTY		SHEET NO.
		WILLIAMSON		348

DISCLAIMER:
The use of this standard is governed by the "Texas Engineering Practice Act". No warranty of any kind is made by TxDOT for any purpose whatsoever. TxDOT assumes no responsibility for the conversion of this standard to other formats or for incorrect results or damages resulting from its use.

DATE: 3/30/2023 6:54:25 PM
FILE: c:\pw-of\pw-of-prod\aguon.ha@aguirre-fields.com\d0226434\PCP.dgn

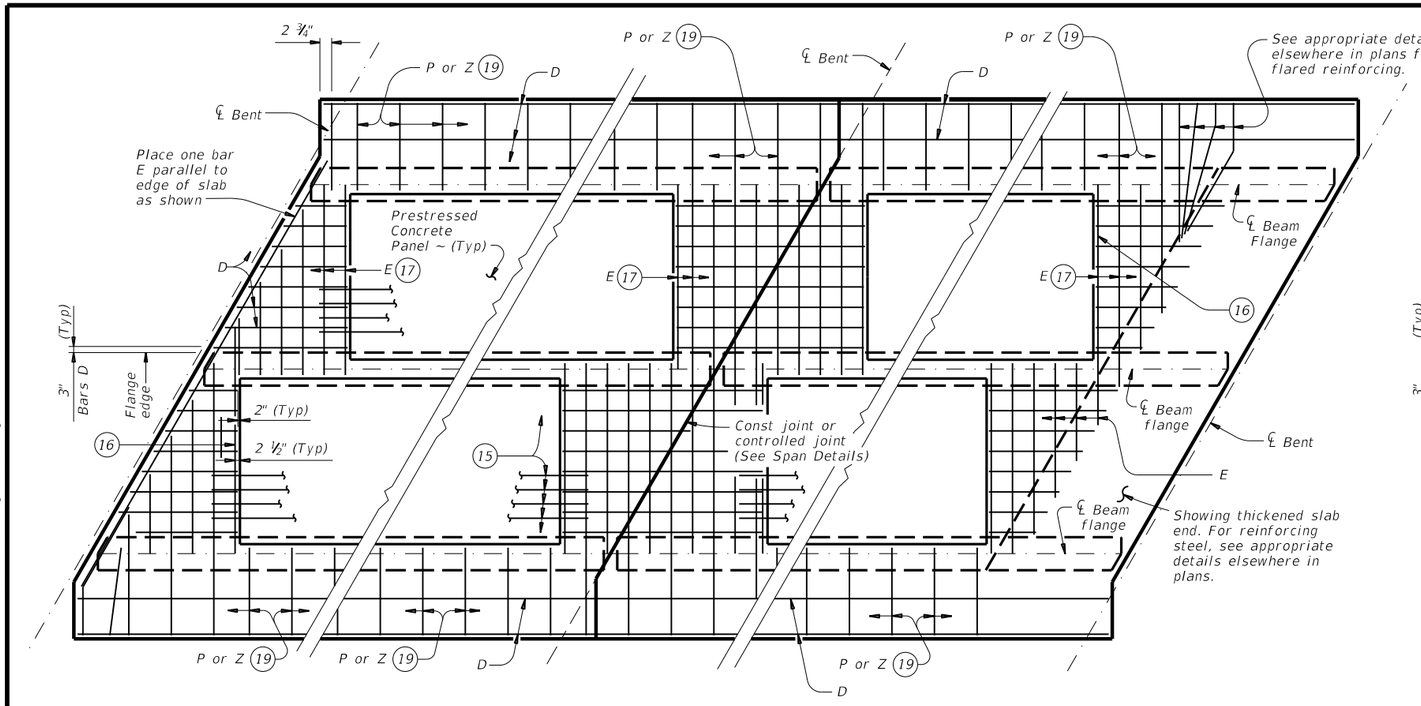

AT ALL SPAN ENDS UNLESS NOTED OTHERWISE | AT INTERIOR BENTS | AT THICKENED END SLABS

OPTION 1 ~ PLAN OF SLABS WITH NORMAL REINFORCEMENT

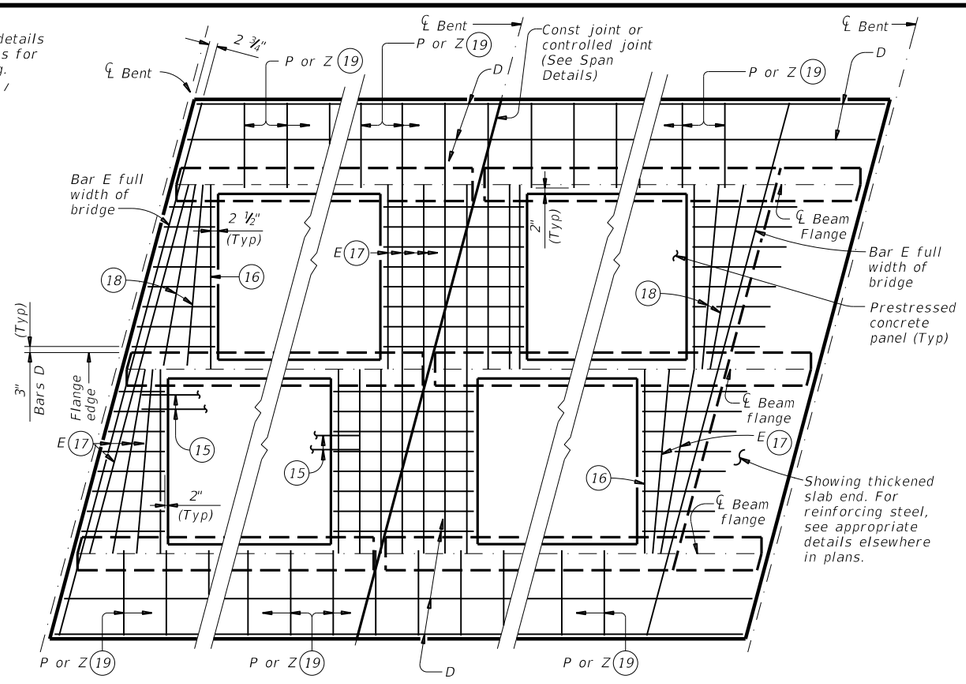

AT ALL SPAN ENDS UNLESS NOTED OTHERWISE | AT INTERIOR BENTS | AT THICKENED END SLABS

OPTION 1 ~ PLAN OF SLABS WITH SKEWED REINFORCEMENT

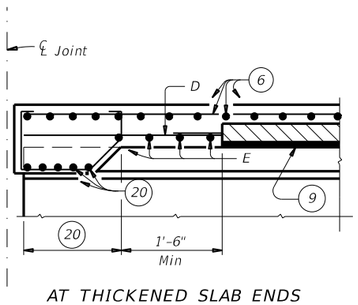

AT THICKENED SLAB ENDS FOR PRESTR CONC U-BMS

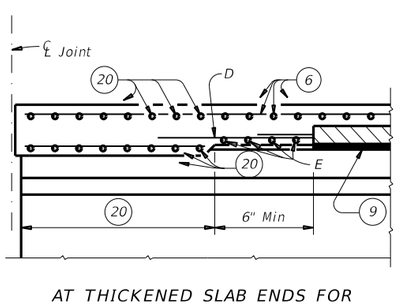

AT THICKENED SLAB ENDS FOR PRESTR CONC I-BMS AND STEEL BMS

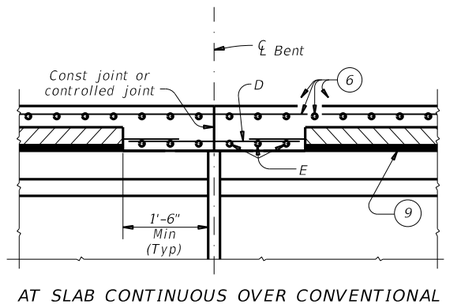

AT SLAB CONTINUOUS OVER CONVENTIONAL INTERIOR BENTS FOR ALL SIMPLE SPAN BMS

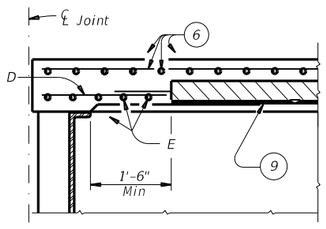

AT CONVENTIONAL END DIAPHRAGMS FOR STEEL BMS

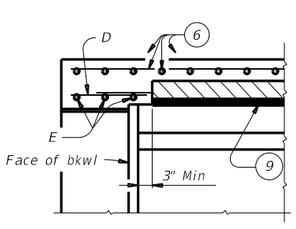

AT SLAB OVER ABUTMENT BACKWALL FOR ALL BMS

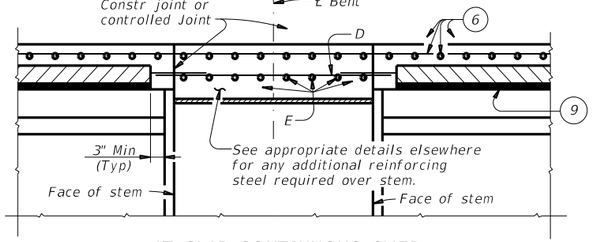

AT SLAB CONTINUOUS OVER INVERTED-T BENTS FOR ALL BMS

OPTION 1 ~ ELEVATIONS AT BEAM ENDS

(6) See Span Details and Thickened Slab End Details for top slab reinforcement and clear cover. Transverse top slab reinforcement may rest on top of prestressed concrete panels if necessary to maintain clear cover.

(9) Butt adjacent bedding strips together with adhesive. Cut v-notches, approx ¼" deep, in the top of the bedding strips at 8' o.c.

(14) Max Spacing as listed unless otherwise shown.

(15) At connection with cast-in-place slab, extend longitudinal panel reinforcement. See PCP-FAB for details.

(16) Maintain one Bar E(#4) parallel to panel ends (Typ).

(17) Bars E(#4) not continuous over beam flanges must overlap beam flange 6" Min.

(18) Add flared Bars E(#4) (Min Spa = 6", Max Spa = 12") as required at panel ends.

(19) Where possible, Bars E(#4) may be extended into overhangs to replace Bars P(#4). Bars Z(#4) are required for sloped overhangs with U-Beams.

(20) See appropriate thickened slab end details for reforcing and limits of thickened slab end.

TABLE OF REINFORCING STEEL (14)

BAR	SIZE	Max Spa (in.)
D	#4	9
E	#4	9
P	#4	18
UP	#4	~
Z	#4	18

HL93 LOADING

SHEET 3 OF 4

Texas Department of Transportation

Bridge Division Standard

PRESTRESSED CONCRETE PANELS
DECK DETAILS

PCP

FILE: pcpstde1-19.dgn	DN: TxDOT	CK: TxDOT	DW: JTR	CK: JMH
©TxDOT April 2019	CONT	SECT	JOB	HIGHWAY
REVISIONS				WYM SPR
	DIST	COUNTY		SHEET NO.
		WILLIAMSON		349

DISCLAIMER:
The use of this standard is governed by the "Texas Engineering Practice Act". No warranty of any kind is made by TxDOT for any purpose whatsoever. TxDOT assumes no responsibility for the conversion of this standard to other formats or for incorrect results or damages resulting from its use.

DATE: 3/30/2023 6:54:26 PM
FILE: c:\pw-df\pw-df-prod\gun.haeguirre-fields.com\d0226434\PCP.dgn

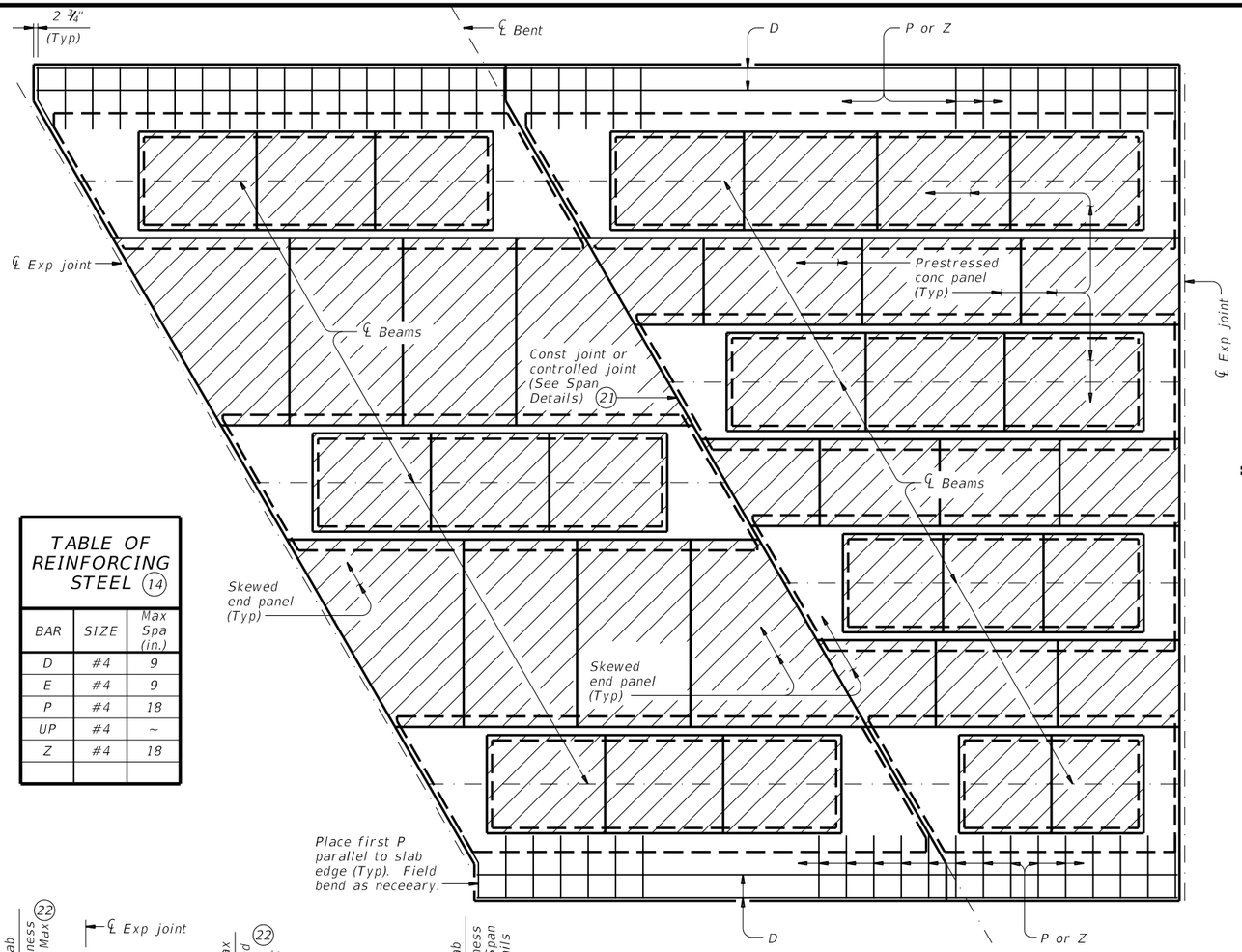

OPTION 2 ~ PLAN OF SLAB

(Showing U-Beams; other beams similar)

TABLE OF REINFORCING STEEL (14)		
BAR	SIZE	Max Spa (in.)
D	#4	9
E	#4	9
P	#4	18
UP	#4	~
Z	#4	18

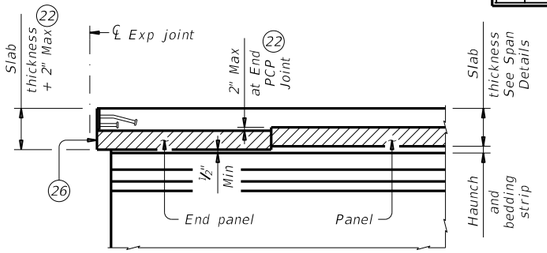

JOINTS (BETWEEN BEAMS/GIRDERS OR AT INV-T STEM)

For SEJ-A, SEJ-S(0), AJ, and Type A expansion joints only.

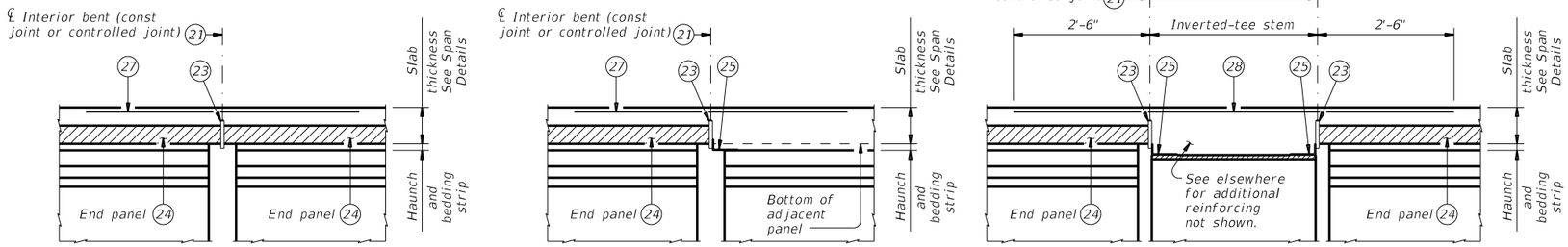

CONVENTIONAL INTERIOR BENT
Panel against panel between beams/girders.

CONVENTIONAL INTERIOR BENT
Panel against beam/girder end in adacent span.

INVERTED-T BENT
Panels against inverted-tee stem

OPTION 2 ~ ELEVATIONS AT BEAM ENDS (6)

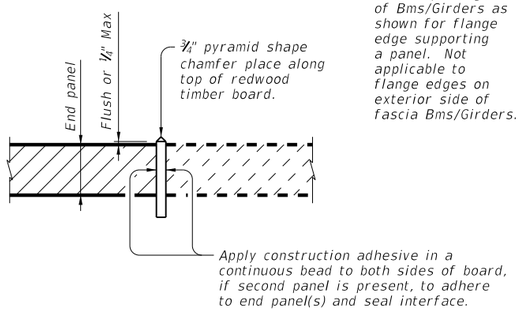

ELEVATION EXAMPLE OF END PANEL AND TIMBER BOARD (23)

See "Option 2 ~ Elevation At Beam Ends".

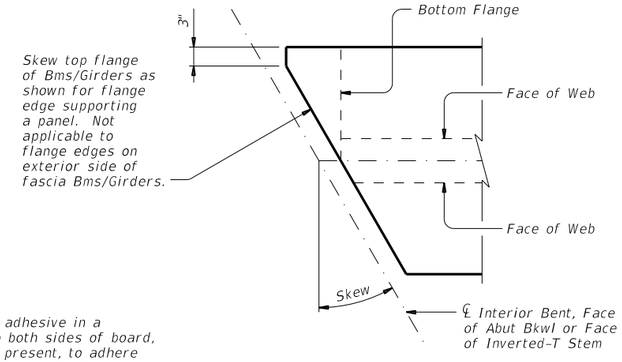

OPTION 2 ~ SHOWING MODIFICATION TO BEAM/GIRDER TOP FLANGE FOR SKEWS OVER 5°

Showing I-Bm/I-Girder, U-Bms and Steel Bms similar.

(6) See Span Details and Thickened Slab End Details for top slab reinforcement and clear cover. Transverse top slab reinforcement may rest on top of prestressed concrete panels if necessary to maintain clear cover.

(14) Max Spacing as listed unless otherwise shown.

(21) 1 ½" Vinyl or plastic joint former at controlled joints (Stress Cap, Zip Strip, Stress Lock, or equal as approved by the Engineer.)

(22) End panel may be set up to 2" lower to accommodate expansion joint hardware, provided bedding strip is not less than ½" thick.

(23) ¾" thick redwood timber board, leave in place. Redwood timber board placed flush with top of panel or within ¼" Max above panel. Place ¾" pyramid shape chamfer along top of timber board. See "Elevation Example of End Panel and Timber Board". Place straight, within ¼" of centerline of bent or face of inverted-tee, across bridge width and end board at exterior flange edge of fascia beams/girders. Do not extend into overhang.

(24) Place panel within ½" of ¾" thick board.

(25) Permanent galvanized steel sheet form. Removable formwork is acceptable.

(26) Place end panel within ½" of expansion joint opening. End panel cannot encroach on required expansion joint opening.

(27) Place additional (#4) bar 5'-0" in length between every slab bars T. Center (#4) bar on Joint.

(28) Place additional (#4) bar continuous 2'-6" beyond each side of Inverted-T Stem between every slab bars T.

SPECIAL OPTION 2 CONSTRUCTION NOTES:

When Option 2 is chosen bottom mat of thickened end slab reinforcing is not required. Use the same top mat as shown on the Thickened Slab End Details sheet.

Placing panels adjacent to expansion joints and bent centerlines prior to completing interior panel placement is recommended. Saw cutting panels to fit is acceptable when approved by the Engineer. Minimum distance from a saw cut edge to a panel strand is 1 ½".

Do not extend the longitudinal panel reinforcement into the cast-in-place slab.

Top flanges of beams and girders on skewed bridges must be modified as shown on this drawing. The Contractor is responsible for coordinating this modification with the beam fabricator prior to submitting shop drawings for approval.

Fabricator may optionally skew the whole end. When electing to skew whole end, girder end details and bearing type at conventional interior bent must be changed to use condition at abutment. Fabricator must coordinate change in bearing type, bearing centerline location, and dowel location with Engineer and Contractor. Show appropriate changes on girder and bearing shop drawings.

Bending of anchor studs of expansion joints shown on standards AJ, SEJ-A and SEJ-S(0) is permissible if necessary to clear top of end panels. The Contractor is responsible for coordinating modifications with the joint fabricator. Submit shop drawings for approval when modifications to expansion joint hardware are made.

Bedding strips under skewed end panels must conform to the requirements of Item 422 except their minimum compressive strength must be 60 psi.

Provide Bars AA, G, K and 0A from standard IGTS in the slab.

HL93 LOADING SHEET 4 OF 4

Texas Department of Transportation — Bridge Division Standard

PRESTRESSED CONCRETE PANELS
DECK DETAILS

PCP

FILE: pcpstde1-19.dgn	DN: TxDOT	CK: TxDOT	DW: JTR	CK: JMH
©TxDOT April 2019 REVISIONS	CONT	SECT	JOB	HIGHWAY
				WYM SPR
	DIST	COUNTY		SHEET NO.
		WILLIAMSON		350

DISCLAIMER:
The use of this standard is governed by the "Texas Engineering Practice Act". No warranty of any kind is made by TxDOT for any purpose whatsoever. TxDOT assumes no responsibility for the conversion of this standard to other formats or for incorrect results or damages resulting from its use.

DATE: 3/30/2023 6:54:40 PM
FILE: c:\pw-df\pw-df-prod\gun.haeguirre-fields.com\d0226434\PCP-FAB.dgn

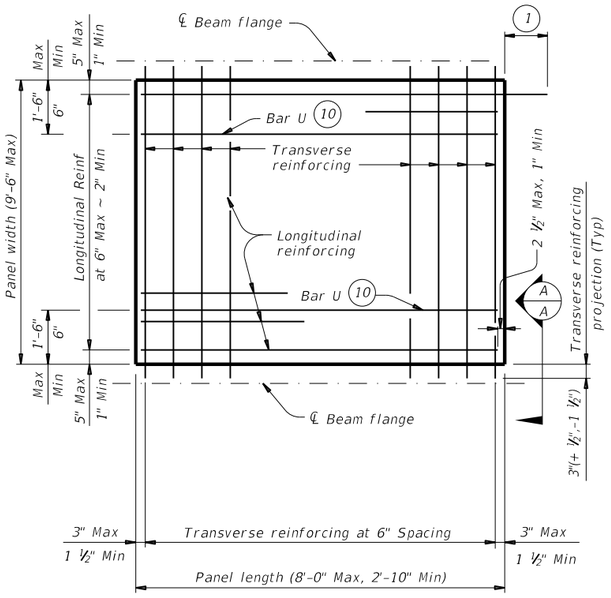

TYPICAL NON-SKEWED PANEL PLAN

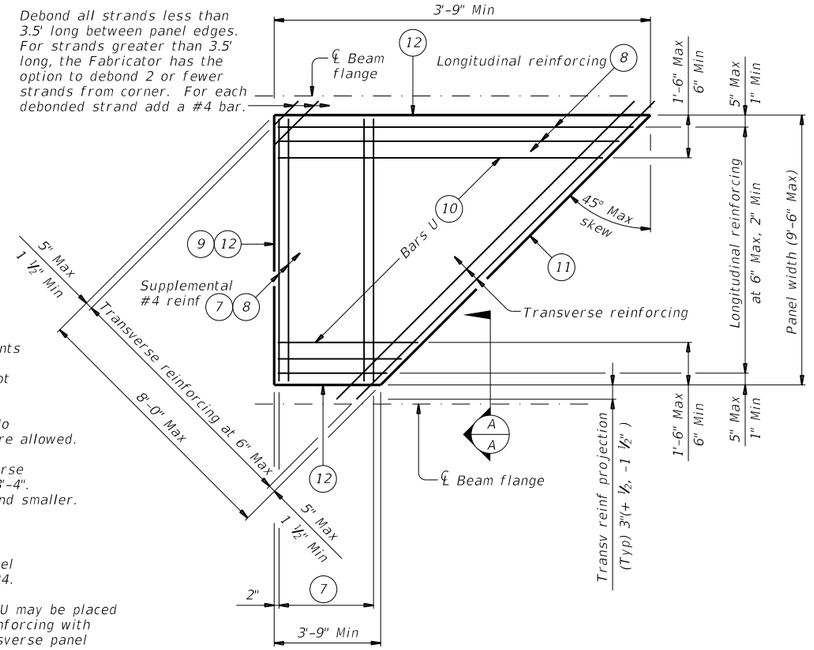

TYPICAL SKEWED END PANEL PLAN

(Only to be used with details shown elsewhere in the plans.)

1. At connection with cast-in-place slab, extend longitudinal panel reinforcement 1'-0" (+2",-0") past panel end. Alternatively, provide (#3) x 2'-0" dowels at 6" Max Spacing and extend dowels 1'-0" past panel end.
2. Four loops required per panel.
3. Four loops required per panel. ⅜" or ½" strands may be used.
4. Normal dimensions must be used on spans with parallel beams. Maximum and Minimum dimensions apply only to spans with flared beams.
5. See Normal Grading Detail on PCP standard for lap requirements and bedding strip dimensions. Some laps shown in tables cannot utilize all bedding strip widths.
6. One Splice allowed per panel. No more than two sheets of WWR are allowed.
7. Provide (#4) bars under transverse reinforcing, 10 Spaces at 4" = 3'-4". Omit for 5 degree (1:12) skew and smaller.
8. End Cover 2 ½" Max, 1" Min.
9. Recess strands on indicated panel edge in accordance with Item 424.
10. At the fabricator's option, Bars U may be placed parallel to transverse panel reinforcing with horizontal legs in plane of transverse panel reinforcing.
11. Use length of indicated panel edge as panel width for purpose of determining type of transverse reinforcing.
12. Timber form work permissible this edge.

Debond all strands less than 3.5' long between panel edges. For strands greater than 3.5' long, the Fabricator has the option to debond 2 or fewer strands from corner. For each debonded strand add a #4 bar.

TABLE A (4) (5)			
Beam Type	Normal (In.)	Min (In.)	Max (In.)
A	3	2 ½	3 ½
B	3	2 ½	3 ½
C	4	3	4 ½
IV	6	4	7 ½
VI	6 ½	4 ½"	8 ½
U40 – 54	5 ½	5 ½	7
Tx28-70	6	5	7 ½
XB20 – 40	4	3	4 ½
XSB12 – 15	4	3	4 ½

TABLE B (4) (5)			
Top Flange Width	Normal (In.)	Min (In.)	Max (In.)
11" to 12"	2 ¾	2 ½	2 ¾
Over 12" to 15"	3 ¼	3	3 ¼
Over 15" to 18"	4	3	4 ¾
Over 18"	5	3 ½	6 ¼

GENERAL NOTES:

Provide Class H concrete for panels. Release strength f'ci=3,500 psi. Minimum 28 day strength f'c=5,000 psi.

Provide ¾" chamfer along bottom edge of panel on beam side.

Do not use epoxy-coated reinforcing steel bar or strand in panels.

Remove laitance from top panel surface.

Finish top of panel to a roughness between a No. 6 and No. 9 concrete surface profile, inclusive, as specified by the International Concrete Repair Institute (ICRI).

Shop drawings for the fabrication of panels will not require the Engineer's approval if fabrication is in accordance with the details shown on this standard.

A panel layout which identifies location of each panel must be developed by the Fabricator. Permanently mark each panel in accordance with the panel layout. A copy of the layout is to be provided to the Engineer.

TRANSVERSE PANEL REINFORCEMENT:

For panel widths over 5', use ⅜" or ½" Dia (270k) prestressing strands with a tension of 14.4 kips per strand.

For panel widths over 3'-6" up to and including 5', use ⅜" or ½" Dia (270k) prestressing strands with a tension of 14.4 kip per strand. Optionally, (#4) Grade 60 reinforcing bars may be used in lieu of prestressed strands.

For panel widths up to 3'-6", use (#4) Grade 60 reinforcing bars (prestressed strands alone are not allowed).

Place transverse panel reinforcement at panel centroid and space at 6" Max.

LONGITUDINAL PANEL REINFORCEMENT:

Any of the following options may be used for longitudinal panel reinforcement:

1. (#3) Grade 60 reinforcing steel at 6" Max Spacing. No splices allowed.
2. ⅜" Dia prestressing strands at 4 ½" Max Spacing (unstressed). No splices allowed.
3. ½" Dia prestressing strands at 6" Max Spacing (unstressed). No splices allowed.
4. Deformed Welded Wire Reinforcement (WWR) (ASTM A1064) providing 0.22 sq in per foot of panel width. Wires larger than D11 not permitted. Provide transverse wires to ensure proper handling of reinforcing. One splice per panel is allowed. See WWR Splice Detail.

No combination of longitudinal reinforcement options in a panel is allowed.

Place longitudinal panel reinforcement above or below transverse panel reinforcement. Must be placed above transverse panel reinforcement for skewed end panels with supplemental (#4) reinforcement.

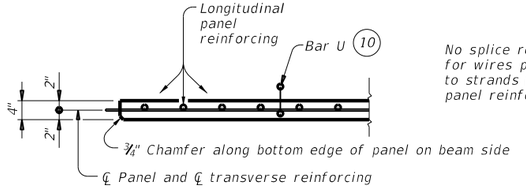

SECTION A-A

(Not showing supplemental #4 bars for skewed end panels.)

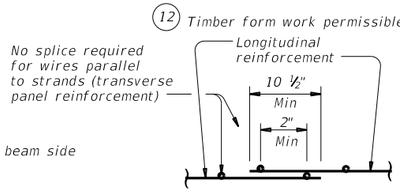

WELDED WIRE REINFORCEMENT (WWR) SPLICE DETAIL (6)

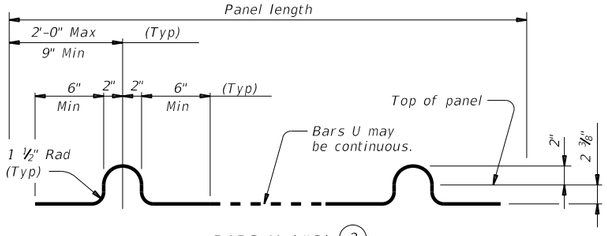

BARS U (#3) (2)

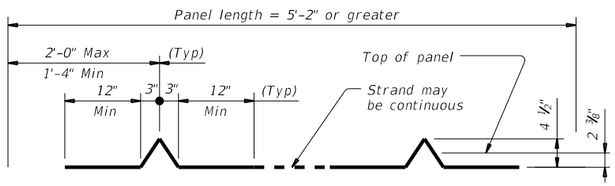

OPTIONAL STRAND FOR BARS U (3)

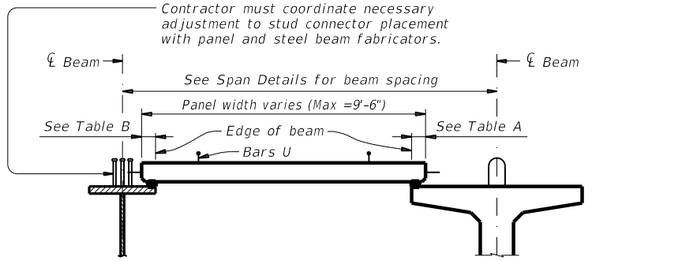

STEEL BEAMS

PRESTRESSED CONCRETE BEAMS OR GIRDERS

Typ unless noted otherwise

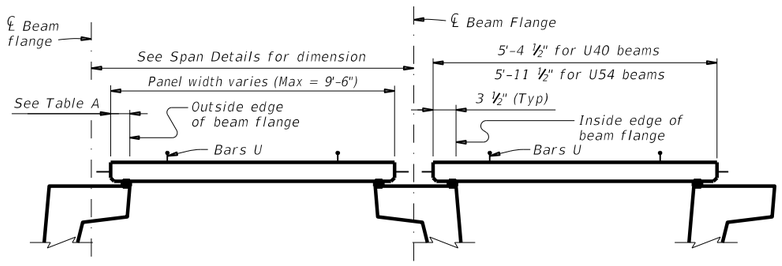

PRESTRESSED CONCRETE U-BEAMS

TYPICAL SECTIONS FOR DETERMINING PANEL WIDTH

HL93 LOADING

Texas Department of Transportation

Bridge Division Standard

PRESTRESSED CONCRETE PANEL FABRICATION DETAILS

PCP-FAB

FILE: pcpstde2-19.dgn	DN: TxDOT	CK: TxDOT	DW: JTR	CK: AES
©TxDOT April 2019 REVISIONS	CONT	SECT	JOB	HIGHWAY
				WYM SPR
	DIST	COUNTY		SHEET NO.
		WILLIAMSON		351

DISCLAIMER:
The use of this standard is governed by the "Texas Engineering Practice Act". No warranty of any kind is made by TxDOT for any purpose whatsoever. TxDOT assumes no responsibility for the conversion of this standard to other formats or for incorrect results or damages resulting from its use.

DATE: 3/30/2023 6:54:55 PM
FILE: c:\pw-of\pw-of-prod\quan.haaguirre-fields.com\d0226434\PR11.dgn

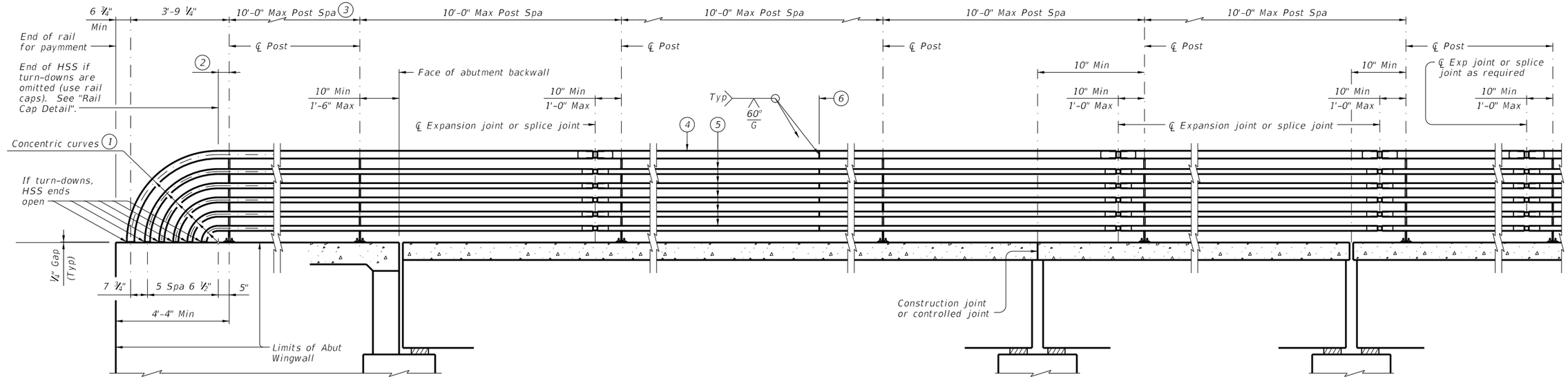

AT ABUTMENTS

AT BENTS WITHOUT SLAB EXP JOINTS

AT BENTS WITH SLAB EXP JOINTS

ROADWAY ELEVATION OF RAIL

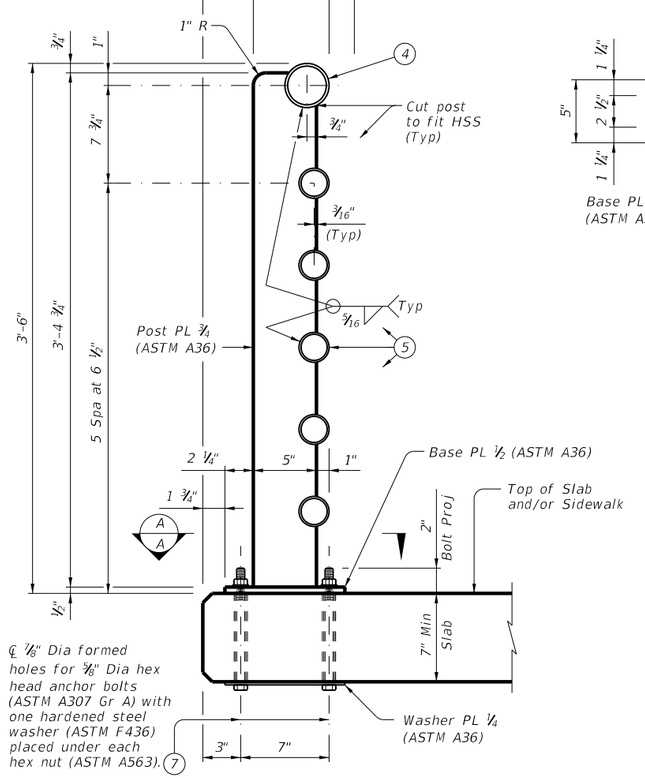

ON BRIDGE SLAB

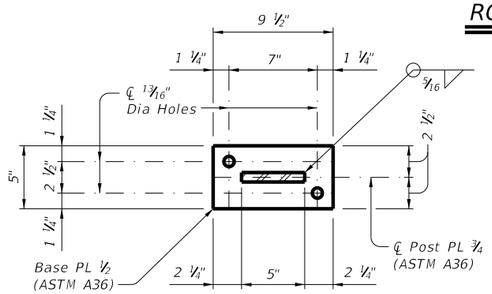

SECTION A-A

Showing base plate detail.

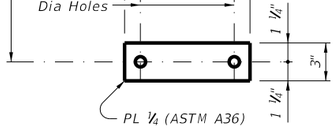

WASHER PLATE DETAIL

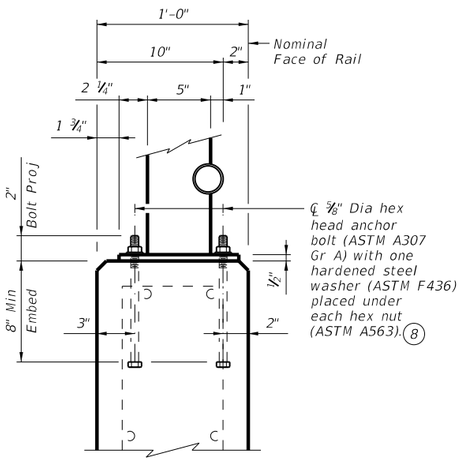

ON ABUTMENT WINGWALLS OR CIP RETAINING WALLS

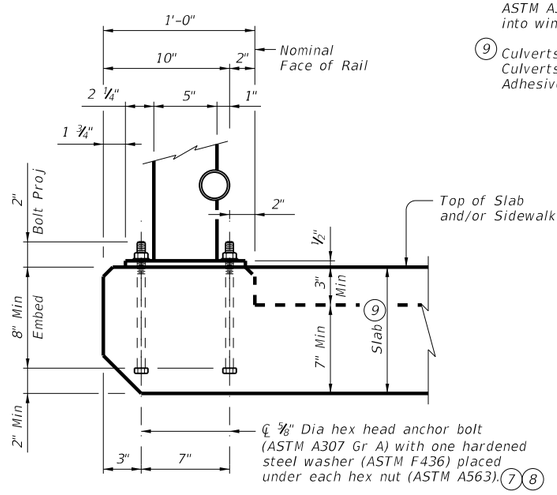

ON CULVERTS WITH OR WITHOUT CURBS

Used with 1'-0" Min thick parallel wings on culverts.

SECTIONS THRU RAIL

(1) Portion of railing with turn-downs to be used or omitted as indicated on Bridge Layout.

(2) 10" Min ~ 1'-6" Max if turn-downs are omitted.

(3) Min of 2 posts required on wingwall.

(4) HSS 3.500 x 0.216 (Rail Member)

(5) HSS 2.375 x 0.154 (Rail Member)

(6) One shop splice per panel is permitted (with minimum 85 percent penetration). The weld may be square groove or single vee groove. Grind smooth.

(7) At Contractor's option, adhesive anchors may be used. Adhesive anchors must be ⅝" Dia ASTM A307 Grade A fully threaded rods. Minimum adhesive anchor embedment depth is 5" into slabs or culverts without curbs. See "Material Notes" for adhesive anchor requirements.

(8) At Contractor's option, adhesive anchors may be used. Adhesive anchors must be ⅝" Dia ASTM A307 Grade A fully threaded rods. Minimum adhesive anchor embedment depth is 7" into wingwalls or culverts with curbs. See "Material Notes" for adhesive anchor requirements.

(9) Culverts without curbs for cast-in-place anchor bolts require a 10" Min slab thickness. Culverts with curbs for cast-in-place anchor bolts require a curb plus slab thickness of 10" Min. Adhesive anchors may be used with a 7" Min slab thickness or culverts with curbs.

SHEET 1 OF 2

Texas Department of Transportation

Bridge Division Standard

PEDESTRIAN RAIL

TYPE PR11

FILE: rlstd028-19.dgn	DN: TAR	CK: TBE	DW: JTR	CK: TAR
©TxDOT September 2019	CONT	SECT	JOB	HIGHWAY
REVISIONS				WYM SPR
	DIST	COUNTY		SHEET NO.
		WILLIAMSON		352

DISCLAIMER:
The use of this standard is governed by the "Texas Engineering Practice Act". No warranty of any kind is made by TxDOT for any purpose whatsoever. TxDOT assumes no responsibility for the conversion of this standard to other formats or for incorrect results or damages resulting from its use.

DATE: 3/30/2023 6:54:56 PM
FILE: c:\pw-of\pw-of-prod\quan.ha@aguirre-fields.com\d0226434\PR11.dgn

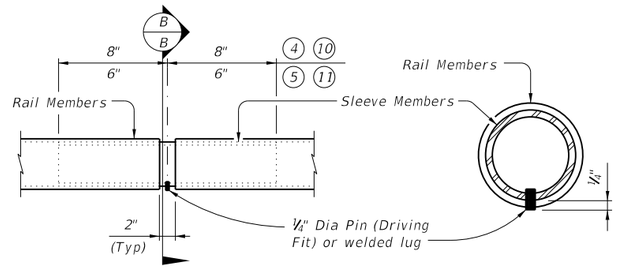

AT SPLICES OR EXP JTS SECTION B-B

PIPE SPLICE DETAIL

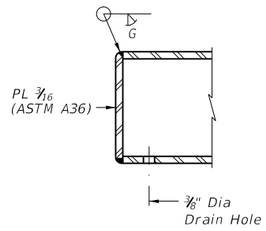

RAIL CAP DETAIL

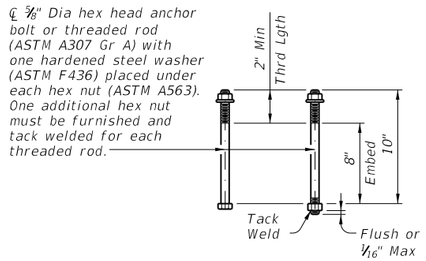

CAST-IN-PLACE & FORMED HOLE ANCHOR BOLT OPTIONS

(4) HSS 3.500 x 0.216 (Rail Member)
(5) HSS 2.375 x 0.154 (Rail Member)
(10) HSS 2.875 x 0.203 (Sleeve Member)
(11) HSS 1.900 x 0.145 (Sleeve Member)

CONSTRUCTION NOTES:

Panel lengths of railing must be attached to a minimum of three posts except at abutment wingwalls.

At the Contractor's option anchor bolts may be an adhesive anchorage system. See "Material Notes".

Test adhesive anchors in accordance with Item 450.3.3, "Tests". Test 3 anchors per 100 anchors installed. Perform corrective measures to provide adequate capacity if any of the tests do not meet the required test load. Repair damage from testing as directed.

Face of rail and posts must be vertical transversely unless otherwise approved. Posts must be perpendicular to adjacent roadway grade. Use Type VIII epoxy mortar under post base plates if gaps larger than 1/16" exist.

For curved railing applications, fabricate the HSS rail to the radius when the radius is 600' or less. Submit shop drawings for approval when tubes are required to be fabricated to a radius. Shop drawings must be submitted to the Engineer for approval.

Round or chamfer all exposed edges of steel components 1/16" by grinding prior to galvanizing.

MATERIAL NOTES:

Provide ASTM A500 Gr B, A1085 or A53 Gr B for all HSS.

Galvanize all metal components of steel rail system. Apply additional coatings when shown elsewhere on the plans. When plans require paint over galvanizing, follow the requirements for painting galvanized steel in Item 445, "Galvanizing" and when field painting, Item 446, "Field Cleaning and Painting Steel". Sleeve members and anchor bolts must receive galvanization prior to installation and only field paint after installation unless directed otherwise by Engineer.

Anchor bolts must be ⅝" Dia ASTM A307 Gr A with one hardened steel washer (ASTM F436) placed under each hex nut or ASTM A307 Gr A threaded rods with one tack welded hex nut each and with one hex nut with one hardened steel washer (ASTM F436) each. Nuts must conform to ASTM A563 requirements.

Optional adhesive anchorage system must be ⅝" Dia ASTM A307 Gr A fully threaded rods with one hex nut and one hardened steel washer (ASTM F436). Nuts must conform to ASTM A563 requirements. Embed fully threaded rods into slab, wingwalls, or culvert curbs using a Type III, Class C, D, E, or F anchor adhesive. Anchor adhesive chosen must be able to achieve a nominal bond strength in tension, Na, of a single anchor of 10 kips (edge distance must be accounted for). Submit signed and sealed calculations or the manufacturer's published literature showing the proposed anchor adhesive's ability to develop this load to the Engineer for approval prior to use. Anchor installation, including hole size, drilling, and clean out, must be in accordance with Item 450, "Railing".

GENERAL NOTES:

Designed according to AASHTO LRFD Specifications.

Do not use this railing on bridges with expansion joints providing more than 5" movement.

Rail anchorage details shown on this standard may require modification for select structure types. See appropriate details elsewhere in plans for these modifications.

For all rails, submit erection drawings showing section lengths, splice locations, rail post spacing and anchor bolt setting for approval.

Average weight of railing is 30 plf.

Texas Department of Transportation | Bridge Division Standard

PEDESTRIAN RAIL

TYPE PR11

FILE:	rlstd028-19.dgn	DN: TAR	CK: TBE	DW: JTR	CK: TAR
©TxDOT	September 2019	CONT	SECT	JOB	HIGHWAY
REVISIONS					WYM SPR
		DIST	COUNTY		SHEET NO.
			WILLIAMSON		353

14-XXX-0-XXXX-XX-XXX

4" minimum

District designation | County designation | Placeholder | Control | Section | Structure number

PAINTED STRUCTURE NUMBER LEGEND

14-XXX-0-XXXX-XX-XXX

- District designation
  14 = Austin District
- County designation
- Placeholder required for national inventory purposes
- Control
- Section
- Structure number

011 = Bastrop
016 = Blanco
027 = Burnet
028 = Caldwell
087 = Gillespie
106 = Hays
144 = Lee
150 = Llano
157 = Mason
227 = Travis
246 = Williamson

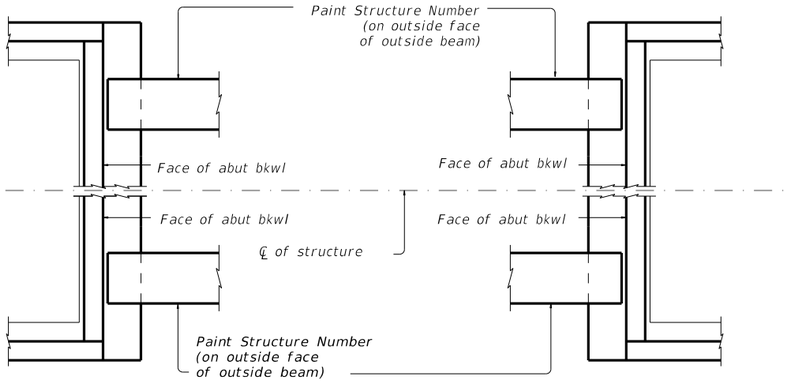

AT BRIDGE LOCATIONS

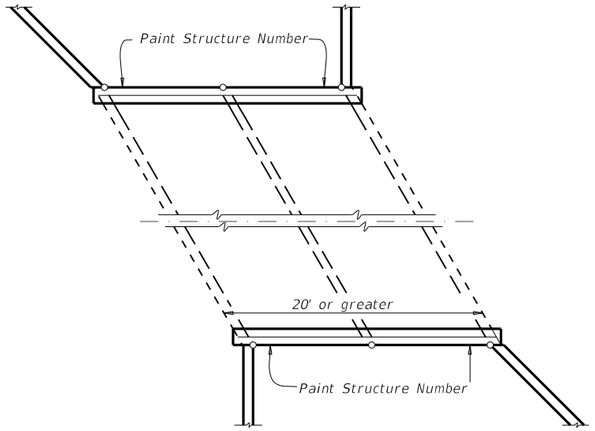

AT CULVERT LOCATIONS

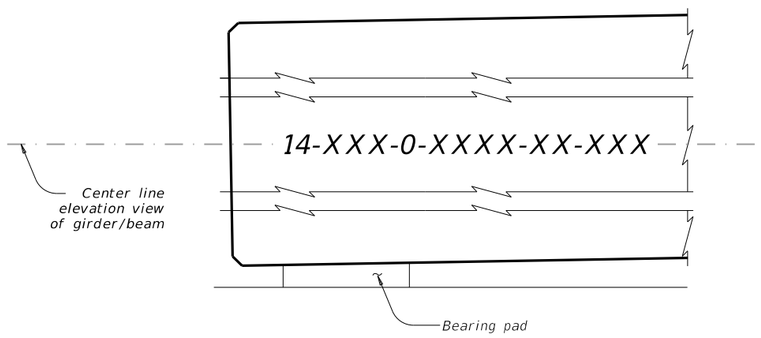

ELEVATION VIEW DETAIL

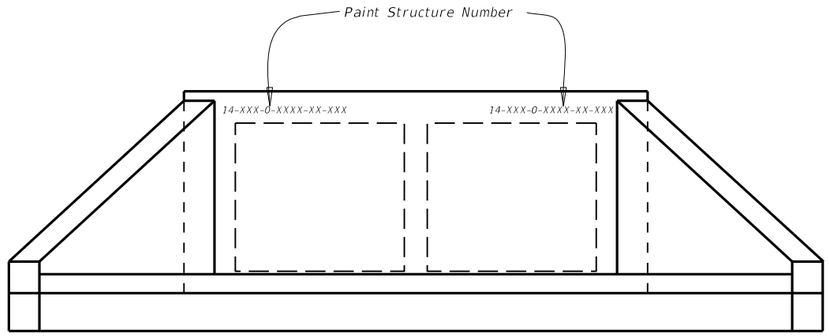

ELEVATION VIEW DETAIL

GENERAL NOTES:

Permanently mark each structure with the painted structure number in accordance with the plans.

Each Structure shall have 4 (four) Structure numbers painted per structure.

Painting structure number work will not be measured or paid for directly but will be considered subsidiary to other pertinent items.

MATERIAL:

Provide black, lead free, CFC free, and CFHC free paint that is water proof, weather resistant, and dries instantly on all surfaces without smearing, smudging, or rippling

Texas Department of Transportation

Austin District Standard

PAINTING STRUCTURE NUMBERS

PSN-19 (AUS)

©TxDOT 2021

CONT	SECT	JOB	HIGHWAY
			WYM SPR
DIST	COUNTY		SHEET NO.
	WILLIAMSON		354

DATE: 3/30/2023 6:55:11 PM
FILE: c:\pw-of\pw-of-prod\quan.ha@aguirre-fields.com\d0226434\PSN-19(AUS).dgn

DISCLAIMER:
The use of this standard is governed by the "Texas Engineering Practice Act". No warranty of any kind is made by TxDOT for any purpose whatsoever. TxDOT assumes no responsibility for the conversion of this standard to other formats or for incorrect results or damages resulting from its use.

DATE: 3/30/2023 6:55:28 PM
FILE: c:\pw-af\pw-af-prod\quan.haeguirre-fields.com\d0226434\SEJ-M.dgn

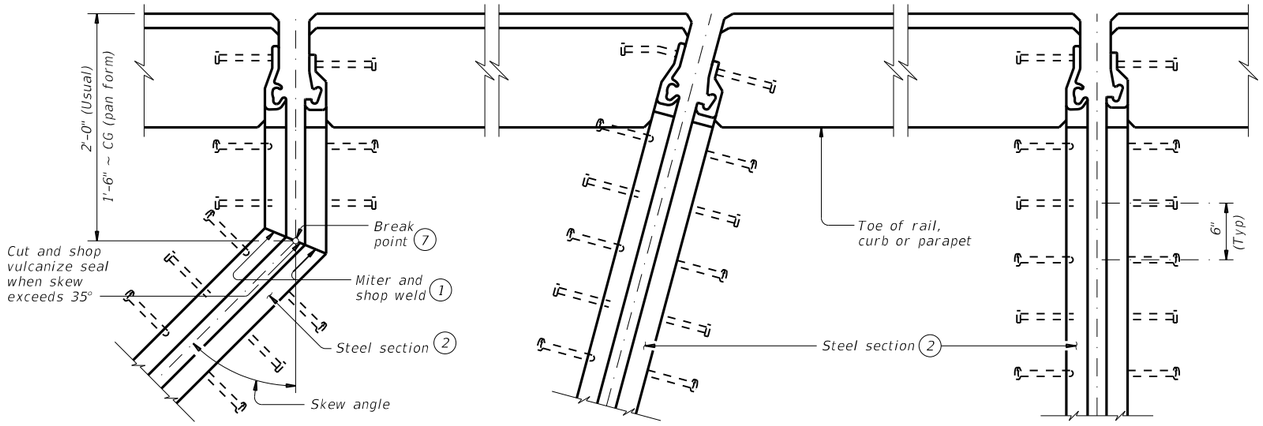

SHOWING SKEWS WITH SLAB BREAKBACKS

SHOWING SKEWS WITHOUT SLAB BREAKBACKS

SHOWING WITHOUT SKEWS AND SLAB BREAKBACKS

PLANS OF END CONDITIONS

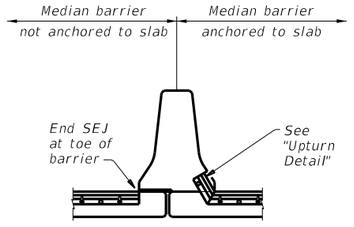

WITH OPEN DECK JOINT BELOW MEDIAN BARRIER

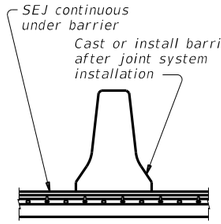

AT MEDIAN BARRIER

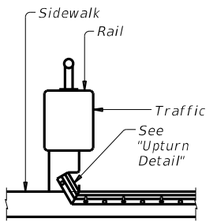

AT SIDEWALK BEHIND BRIDGE RAIL

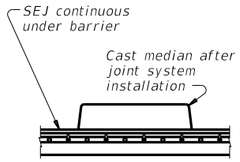

AT RAISED MEDIAN

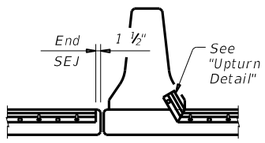

WITH OPEN DECK JOINT ADJACENT TO MEDIAN BARRIER

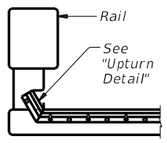

AT CONCRETE BRIDGE RAIL

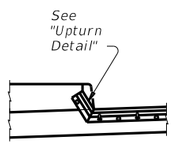

AT SIDEWALK

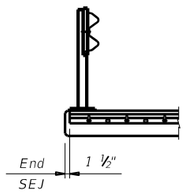

AT STEEL POST BRIDGE RAIL

TYPICAL SECTIONS (5)

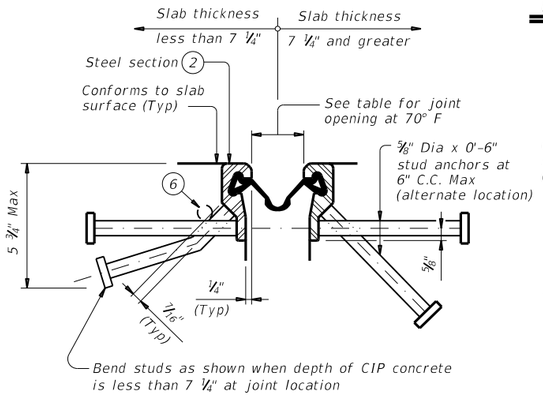

SECTION THRU WATSON BOWMAN ACME (SE-400 OR SE-500) JOINTS

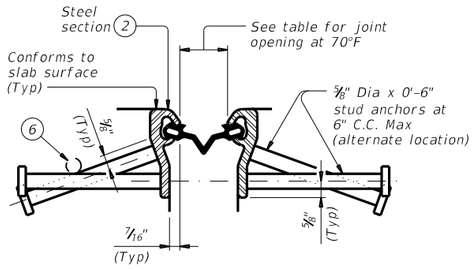

SECTION THRU D.S. BROWN (A2R-400 OR A2R-XTRA) JOINTS

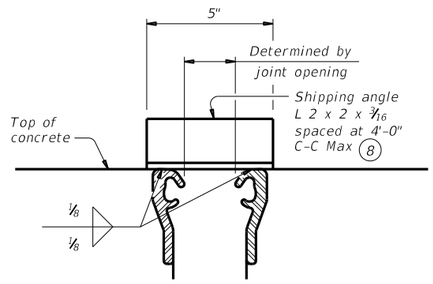

SHOWING D.S. BROWN (Ty SSCM2)
(All joints are similar.) (Studs are not shown for clarity.)

SHIPPING ANGLE

An alternate method of securing joint sections may be used if approved by the Bridge Division. Erection bolts are not allowed.

TABLE OF SEALED EXPANSION JOINT INFORMATION

MANUFACTURER	STEEL SECTION (2)	STRIP SEAL			
		4" JOINT		5" JOINT	
		Seal Type	Joint Opening (3)	Seal Type	Joint Opening (3)
D.S. Brown	Type SSCM2	A2R-400	1 3/4"	A2R-XTRA	2"
Watson Bowman Acme	Type R	SE-400	1 3/4"	SE-500	2"

REDUCED LONGITUDINAL MOVEMENT RANGE		
SKEW (deg)	JOINT SIZE	
	4"	5"
0	4.0"	5.0"
15	4.0"	5.0"
30	3.5"	4.3"
45	2.8"	3.5"

DESIGN NOTES:

Joints installed on a skew have reduced ability to accommodate longitudinal movement. Use table values to determine the correct joint size for skewed installations.

For other skews over 25 degrees, calculate reduced movement range by multiplying joint size by cosine (skew).

(1) Remove all burrs which will be in contact with seal prior to making splice.

(2) Shape of steel section shown is typical. Variations in sections must be approved by the Engineer.

(3) These openings are also the recommended minimum installation openings.

(4) Reduce for sidewalk or parapet heights less than 6".

(5) Other conditions affecting the joint profile should be noted elsewhere.

(6) Move transverse bars that are in conflict with SEJ studs, in either the bridge slab or approach slab, to rest at the junction of the studs.

(7) See Span details for location of break point.

(8) Align shipping angle perpendicular to joint.

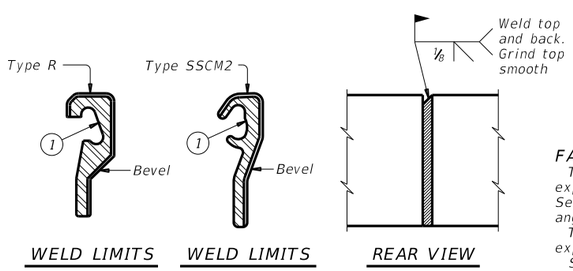

WELD LIMITS WELD LIMITS REAR VIEW

FIELD SPLICE DETAIL

FABRICATION NOTES:

Temporarily shop assemble corresponding sections of sealed expansion joints (SEJ), check for fit, and match mark for shipment. Secure corresponding sections together for shipment with shipping angle. Do not use erection bolts.

The seal must be continuous and included in the price bid for sealed expansion joint.

Ship steel sections in convenient lengths of 10'-0" Min and 24'-0" Max unless necessary for staged construction or widenings. One shop splice is permitted in each shipping length provided no piece is less than 2'-0" long and sufficient studs are added to limit the stud to shop splice distance to 2" Min and 4" Max.

Weld studs in accordance with AWS D1.1.

Butt weld all shop and field splices and grind smooth areas in contact with seal. Make all necessary field splice joint preparations in the shop.

Paint the entire steel section with System II or IV primer in accordance with Item 446, "Feild Cleaning and Painting Steel", unless required to galvanize when shown in the plans. Provide galvanizing in accordance with Item 445, "Galvanizing". Provide paints in accordance with Item 446.2. Prepare steel and apply paint in accordance with Item 446.4.7.3 and 446.4.7.4.

Shop drawings for the fabrication of sealed expansion joints will not require the Engineer's approval if fabrication is in accordance with the details shown on this standard.

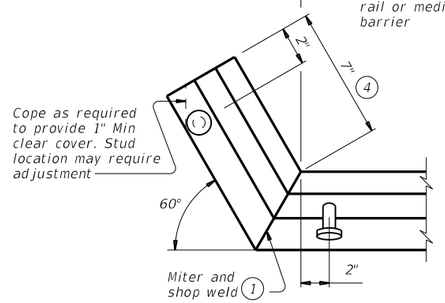

UPTURN DETAIL

CONSTRUCTION NOTES:

Secure the sealed expansion joint in position and place to the proper grade and alignment by welding braces to adjacent reinforcing steel, to prestressed beam stirrups, or to anchors cast in concrete diaphragms. Include cost of temporary bracing in the price bid for sealed expansion joint.

Remove shipping angle immediately after each joint half is secured in place. Grind smooth, and touch up with organic zinc-rich paint.

Clean and prepare seal cavity for seal installation as per the Manufacturer's installation procedures.

GENERAL NOTES:

Provide sealed expansion joints in the size and at locations shown on the plans.

Minimum slab and overhang thickness required for the use of SEJ-M is 6 ½".

Texas Department of Transportation

Bridge Division Standard

SEALED EXPANSION JOINT TYPE M WITHOUT OVERLAY

SEJ-M

FILE: sejmste1-19.dgn	DN: TxDOT	CK: TxDOT	DW: JTR	CK: JMH
©TxDOT April 2019	CONT	SECT	JOB	HIGHWAY
REVISIONS				WYM SPR
	DIST	COUNTY		SHEET NO.
		WILLIAMSON		355

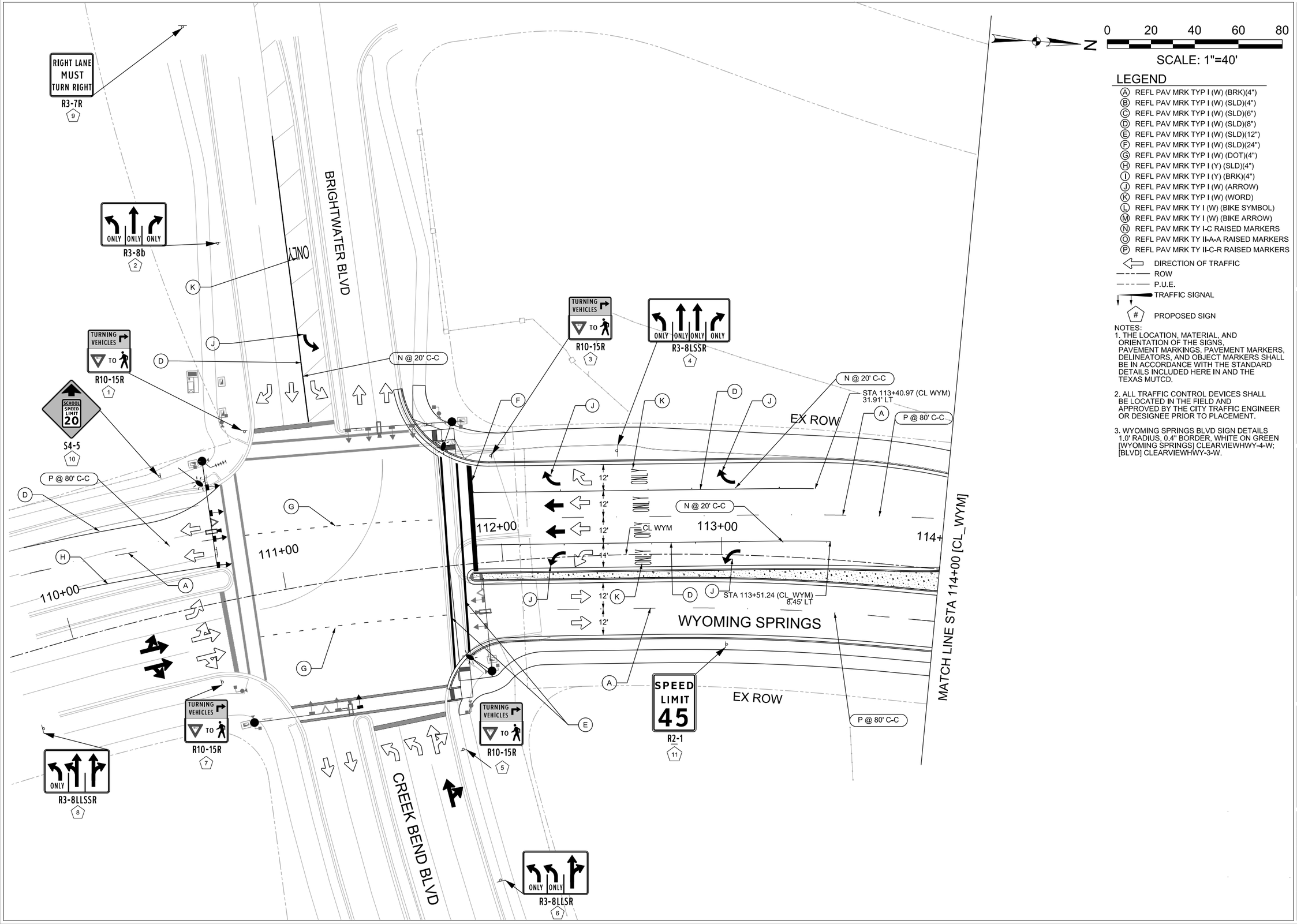

0 20 40 60 80

SCALE: 1"=40'

LEGEND

- (A) REFL PAV MRK TYP I (W) (BRK)(4")
- (B) REFL PAV MRK TYP I (W) (SLD)(4")
- (C) REFL PAV MRK TYP I (W) (SLD)(6")
- (D) REFL PAV MRK TYP I (W) (SLD)(8")
- (E) REFL PAV MRK TYP I (W) (SLD)(12")
- (F) REFL PAV MRK TYP I (W) (SLD)(24")
- (G) REFL PAV MRK TYP I (W) (DOT)(4")
- (H) REFL PAV MRK TYP I (Y) (SLD)(4")
- (I) REFL PAV MRK TYP I (Y) (BRK)(4")
- (J) REFL PAV MRK TYP I (W) (ARROW)
- (K) REFL PAV MRK TYP I (W) (WORD)
- (L) REFL PAV MRK TY I (W) (BIKE SYMBOL)
- (M) REFL PAV MRK TY I (W) (BIKE ARROW)
- (N) REFL PAV MRK TY I-C RAISED MARKERS
- (O) REFL PAV MRK TY II-A-A RAISED MARKERS
- (P) REFL PAV MRK TY II-C-R RAISED MARKERS
- DIRECTION OF TRAFFIC
- ROW
- P.U.E.
- TRAFFIC SIGNAL
- (#) PROPOSED SIGN

NOTES:

1. THE LOCATION, MATERIAL, AND ORIENTATION OF THE SIGNS, PAVEMENT MARKINGS, PAVEMENT MARKERS, DELINEATORS, AND OBJECT MARKERS SHALL BE IN ACCORDANCE WITH THE STANDARD DETAILS INCLUDED HERE IN AND THE TEXAS MUTCD.
2. ALL TRAFFIC CONTROL DEVICES SHALL BE LOCATED IN THE FIELD AND APPROVED BY THE CITY TRAFFIC ENGINEER OR DESIGNEE PRIOR TO PLACEMENT.
3. WYOMING SPRINGS BLVD SIGN DETAILS 1.0' RADIUS, 0.4" BORDER, WHITE ON GREEN [WYOMING SPRINGS] CLEARVIEWHWY-4-W; [BLVD] CLEARVIEWHWY-3-W.

WYOMING SPRINGS
SEGMENT 1
ROUND ROCK, TX

ROUND ROCK TEXAS

halff
13620 BRANTWICK DR
BLDG C, STE 100
AUSTIN, TX 78729
(512) 777-4600
TBPELS FIRM #312

No.	Revision Date	Description

F-312 4/5/23
STATE OF TEXAS
JEFFREY L. NAGY
133255
LICENSED
PROFESSIONAL ENGINEER

100% SUBMITTAL

Project No.:	36179.002
Issued:	4/28/2023
Drawn By:	SG
Checked By:	JN
Scale:	1"=40'

Sheet Title
SIGNING & PAVEMENT MARKING LAYOUTS (1 OF10)

356
Sheet Number

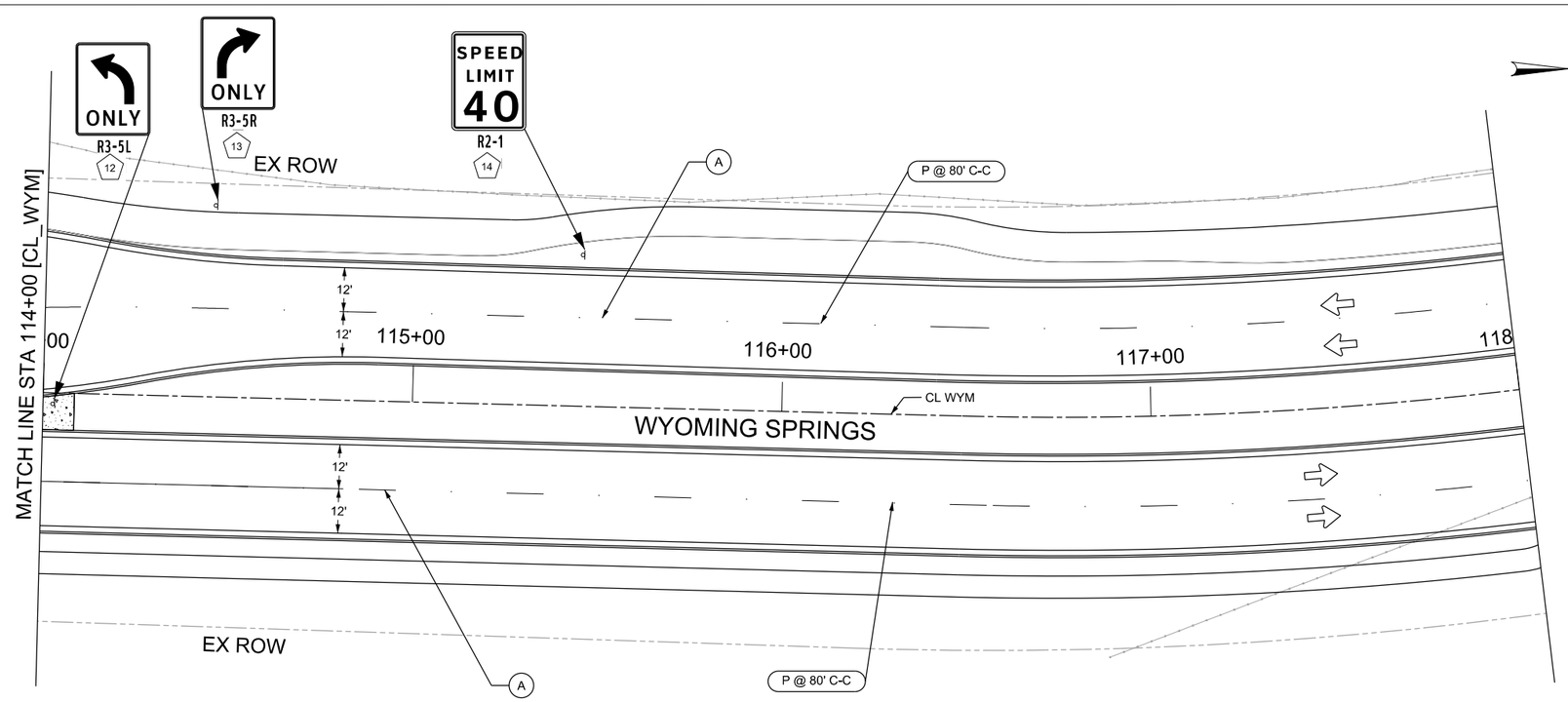



LEGEND

- (A) REFL PAV MRK TYP I (W) (BRK)(4")
- (B) REFL PAV MRK TYP I (W) (SLD)(4")
- (C) REFL PAV MRK TYP I (W) (SLD)(6")
- (D) REFL PAV MRK TYP I (W) (SLD)(8")
- (E) REFL PAV MRK TYP I (W) (SLD)(12")
- (F) REFL PAV MRK TYP I (W) (SLD)(24")
- (G) REFL PAV MRK TYP I (W) (DOT)(4")
- (H) REFL PAV MRK TYP I (Y) (SLD)(4")
- (I) REFL PAV MRK TYP I (Y) (BRK)(4")
- (J) REFL PAV MRK TYP I (W) (ARROW)
- (K) REFL PAV MRK TYP I (W) (WORD)
- (L) REFL PAV MRK TY I (W) (BIKE SYMBOL)
- (M) REFL PAV MRK TY I (W) (BIKE ARROW)
- (N) REFL PAV MRK TY I-C RAISED MARKERS
- (O) REFL PAV MRK TY II-A-A RAISED MARKERS
- (P) REFL PAV MRK TY II-C-R RAISED MARKERS
- DIRECTION OF TRAFFIC
- ROW
- P.U.E.
- TRAFFIC SIGNAL
- (#) PROPOSED SIGN

NOTES:

1. THE LOCATION, MATERIAL, AND ORIENTATION OF THE SIGNS, PAVEMENT MARKINGS, PAVEMENT MARKERS, DELINEATORS, AND OBJECT MARKERS SHALL BE IN ACCORDANCE WITH THE STANDARD DETAILS INCLUDED HERE IN AND THE TEXAS MUTCD.
2. ALL TRAFFIC CONTROL DEVICES SHALL BE LOCATED IN THE FIELD AND APPROVED BY THE CITY TRAFFIC ENGINEER OR DESIGNEE PRIOR TO PLACEMENT.
3. WYOMING SPRINGS BLVD SIGN DETAILS 1.0' RADIUS, 0.4" BORDER, WHITE ON GREEN [WYOMING SPRINGS] CLEARVIEWHWY-4-W; [BLVD] CLEARVIEWHWY-3-W.

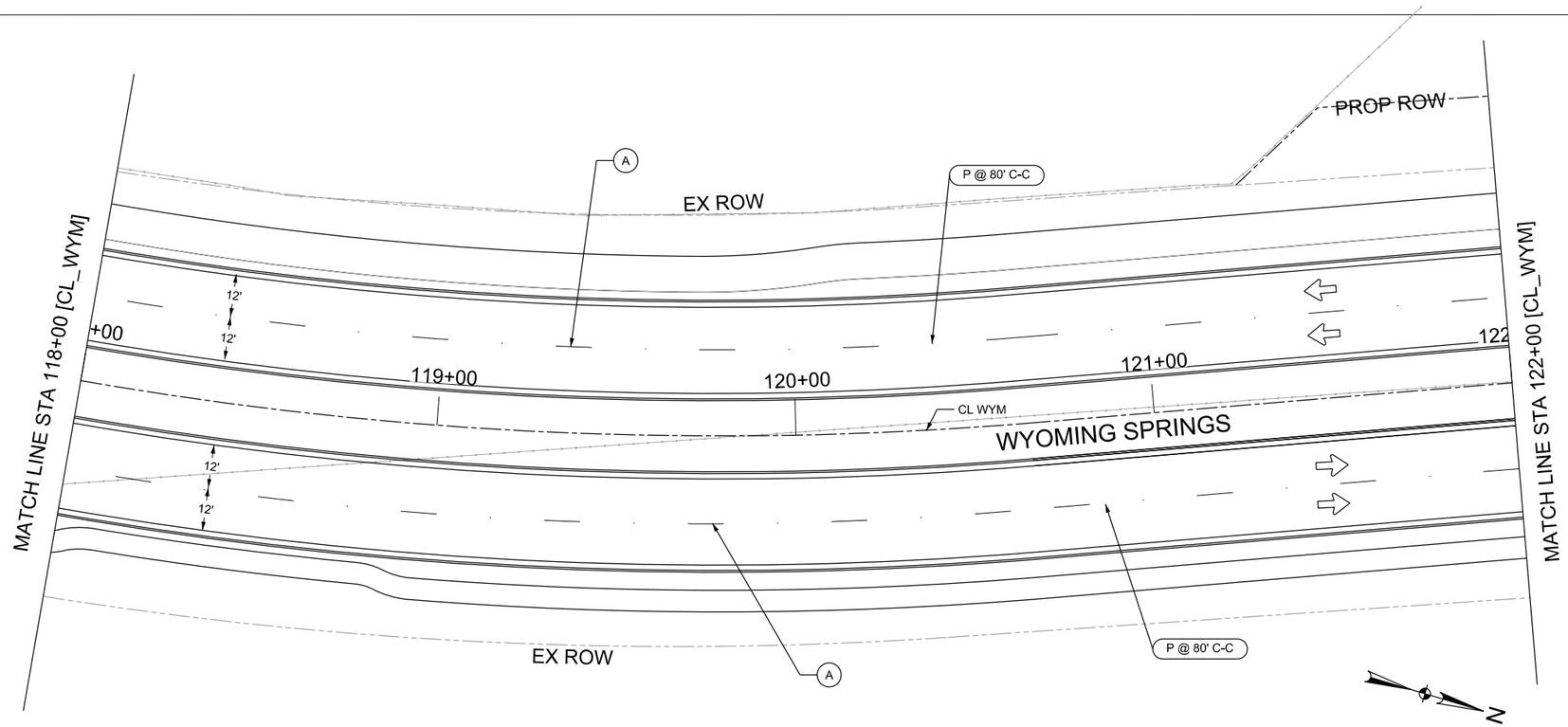

WYOMING SPRINGS
SEGMENT 1
ROUND ROCK, TX

ROUND ROCK TEXAS

halff
13620 BRAKWICK DR
BLDG C, STE 100
AUSTIN, TX 78729
(512) 777-4800
TBPELS FIRM #312

No.	Revision Date	Description

F-312 4/5/23
STATE OF TEXAS
JEFFREY L. NAGY
133255
LICENSED
PROFESSIONAL ENGINEER

100% SUBMITTAL

Project No.:	36179.002
Issued:	4/28/2023
Drawn By:	SG
Checked By:	JN
Scale:	1"=40'

Sheet Title
SIGNING & PAVEMENT MARKING LAYOUTS (2 OF10)

357
Sheet Number

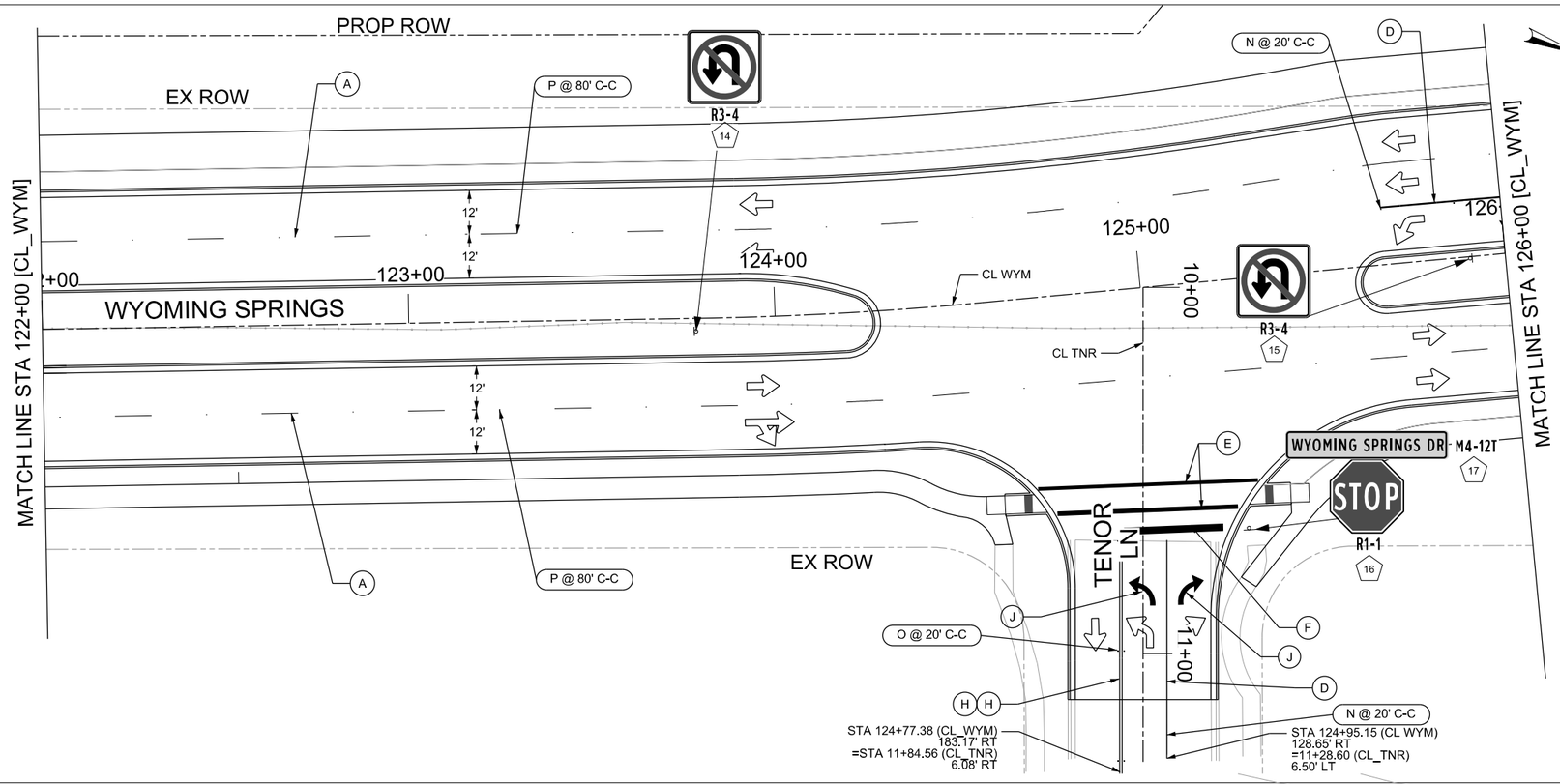

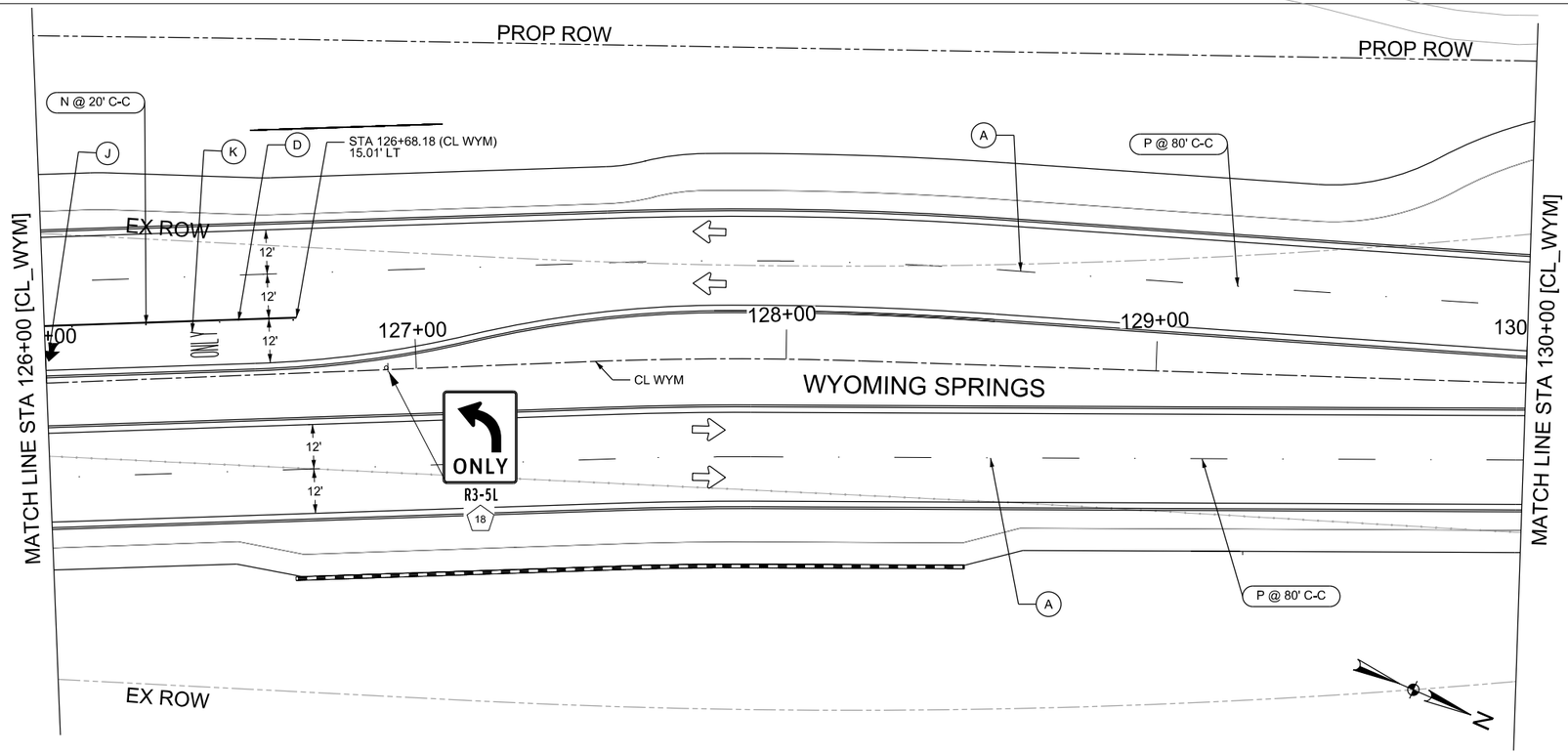

0 20 40 60 80

SCALE: 1"=40'

LEGEND

- (A) REFL PAV MRK TYP I (W) (BRK)(4")
- (B) REFL PAV MRK TYP I (W) (SLD)(4")
- (C) REFL PAV MRK TYP I (W) (SLD)(6")
- (D) REFL PAV MRK TYP I (W) (SLD)(8")
- (E) REFL PAV MRK TYP I (W) (SLD)(12")
- (F) REFL PAV MRK TYP I (W) (SLD)(24")
- (G) REFL PAV MRK TYP I (W) (DOT)(4")
- (H) REFL PAV MRK TYP I (Y) (SLD)(4")
- (I) REFL PAV MRK TYP I (Y) (BRK)(4")
- (J) REFL PAV MRK TYP I (W) (ARROW)
- (K) REFL PAV MRK TYP I (W) (WORD)
- (L) REFL PAV MRK TY I (W) (BIKE SYMBOL)
- (M) REFL PAV MRK TY I (W) (BIKE ARROW)
- (N) REFL PAV MRK TY I-C RAISED MARKERS
- (O) REFL PAV MRK TY II-A-A RAISED MARKERS
- (P) REFL PAV MRK TY II-C-R RAISED MARKERS
- DIRECTION OF TRAFFIC
- ROW
- P.U.E.
- TRAFFIC SIGNAL
- (#) PROPOSED SIGN

NOTES:
1. THE LOCATION, MATERIAL, AND ORIENTATION OF THE SIGNS, PAVEMENT MARKINGS, PAVEMENT MARKERS, DELINEATORS, AND OBJECT MARKERS SHALL BE IN ACCORDANCE WITH THE STANDARD DETAILS INCLUDED HERE IN AND THE TEXAS MUTCD.

2. ALL TRAFFIC CONTROL DEVICES SHALL BE LOCATED IN THE FIELD AND APPROVED BY THE CITY TRAFFIC ENGINEER OR DESIGNEE PRIOR TO PLACEMENT.

3. WYOMING SPRINGS BLVD SIGN DETAILS 1.0' RADIUS, 0.4" BORDER, WHITE ON GREEN [WYOMING SPRINGS] CLEARVIEWHWY-4-W; [BLVD] CLEARVIEWHWY-3-W.

WYOMING SPRINGS
SEGMENT 1
ROUND ROCK, TX

ROUND ROCK TEXAS

halff
13620 BRANTWICK DR
BLDG C, STE 100
AUSTIN, TX 78729
(512) 777-4600
TBPELS FIRM #312

Revision No.	Date	Description

F-312 4/28/23
STATE OF TEXAS
JEFFREY L. NAGY
133255
LICENSED
PROFESSIONAL ENGINEER

100% SUBMITTAL

Project No.:	36179.002
Issued:	4/28/2023
Drawn By:	SG
Checked By:	JN
Scale:	1"=40'

Sheet Title
SIGNING & PAVEMENT MARKING LAYOUTS (3 OF10)

358
Sheet Number

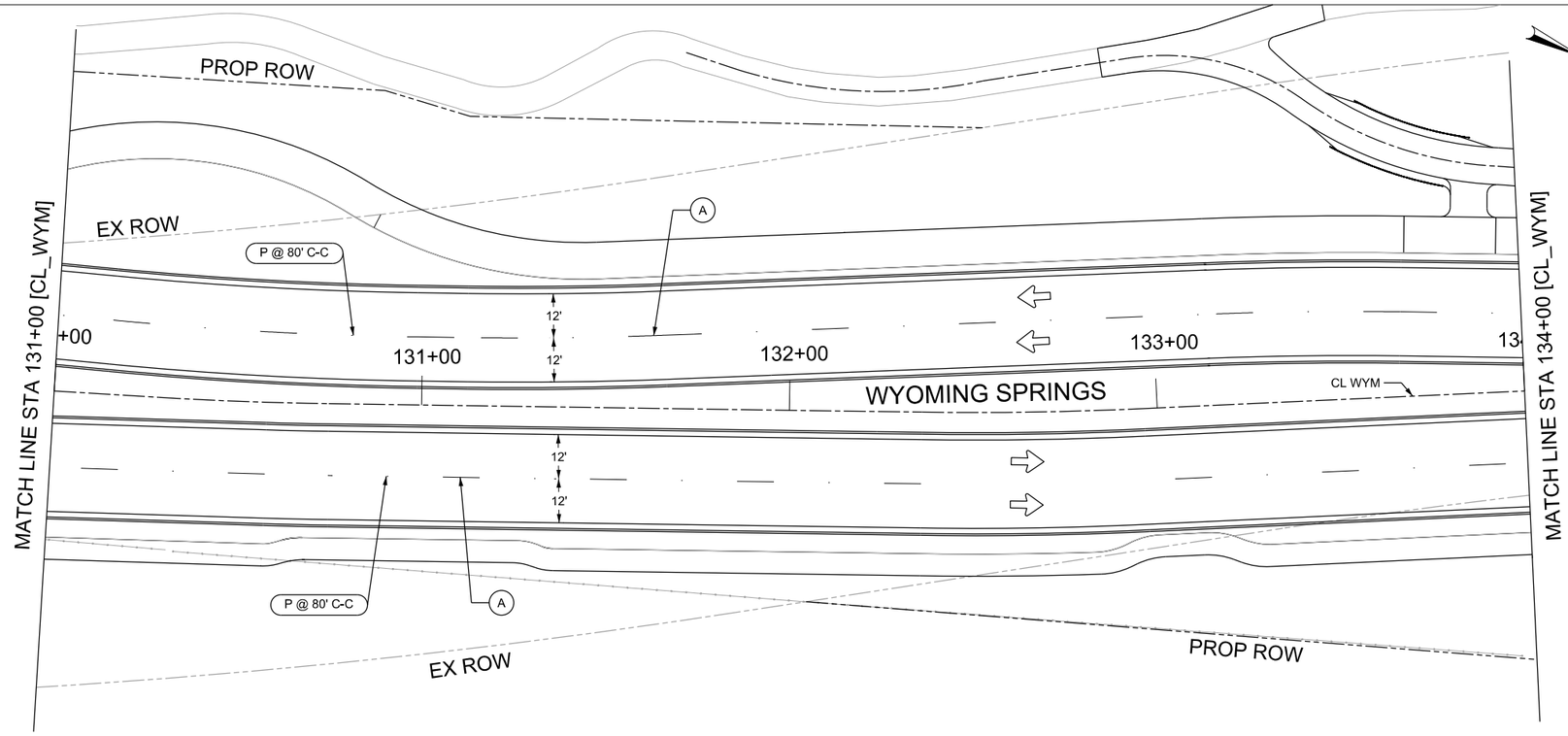

0 20 40 60 80

SCALE: 1"=40'

LEGEND

- (A) REFL PAV MRK TYP I (W) (BRK)(4")
- (B) REFL PAV MRK TYP I (W) (SLD)(4")
- (C) REFL PAV MRK TYP I (W) (SLD)(6")
- (D) REFL PAV MRK TYP I (W) (SLD)(8")
- (E) REFL PAV MRK TYP I (W) (SLD)(12")
- (F) REFL PAV MRK TYP I (W) (SLD)(24")
- (G) REFL PAV MRK TYP I (W) (DOT)(4")
- (H) REFL PAV MRK TYP I (Y) (SLD)(4")
- (I) REFL PAV MRK TYP I (Y) (BRK)(4")
- (J) REFL PAV MRK TYP I (W) (ARROW)
- (K) REFL PAV MRK TYP I (W) (WORD)
- (L) REFL PAV MRK TY I (W) (BIKE SYMBOL)
- (M) REFL PAV MRK TY I (W) (BIKE ARROW)
- (N) REFL PAV MRK TY I-C RAISED MARKERS
- (O) REFL PAV MRK TY II-A-A RAISED MARKERS
- (P) REFL PAV MRK TY II-C-R RAISED MARKERS
- DIRECTION OF TRAFFIC
- ROW
- P.U.E.
- TRAFFIC SIGNAL
- (#) PROPOSED SIGN

NOTES:

1. THE LOCATION, MATERIAL, AND ORIENTATION OF THE SIGNS, PAVEMENT MARKINGS, PAVEMENT MARKERS, DELINEATORS, AND OBJECT MARKERS SHALL BE IN ACCORDANCE WITH THE STANDARD DETAILS INCLUDED HERE IN AND THE TEXAS MUTCD.
2. ALL TRAFFIC CONTROL DEVICES SHALL BE LOCATED IN THE FIELD AND APPROVED BY THE CITY TRAFFIC ENGINEER OR DESIGNEE PRIOR TO PLACEMENT.
3. WYOMING SPRINGS BLVD SIGN DETAILS 1.0' RADIUS, 0.4" BORDER, WHITE ON GREEN [WYOMING SPRINGS] CLEARVIEWHWY-4-W; [BLVD] CLEARVIEWHWY-3-W.

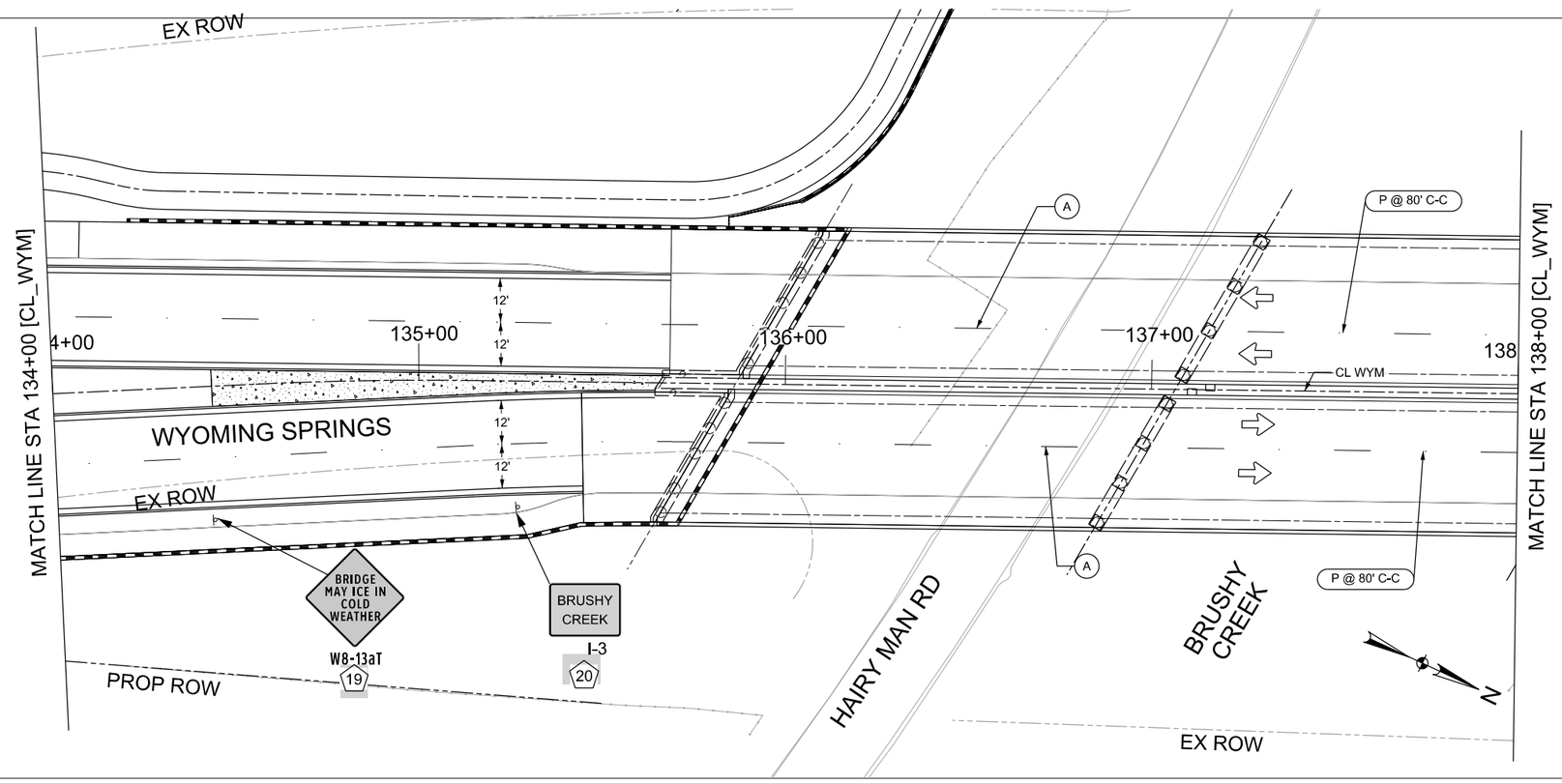

WYOMING SPRINGS
SEGMENT 1
ROUND ROCK, TX

ROUND ROCK TEXAS

halff
13620 BRIARWICK DR
BLDG C, STE 100
AUSTIN, TX 78729
(512) 777-4600
TBPELS FIRM #312

Revision No.	Date	Description

F-312 4/28/23
STATE OF TEXAS
JEFFREY L. NAGY
133255
LICENSED
PROFESSIONAL ENGINEER

100% SUBMITTAL

Project No.:	36179.002
Issued:	4/28/2023
Drawn By:	SG
Checked By:	JN
Scale:	1"=40'

Sheet Title
SIGNING & PAVEMENT MARKING LAYOUTS (4 OF10)

359
Sheet Number

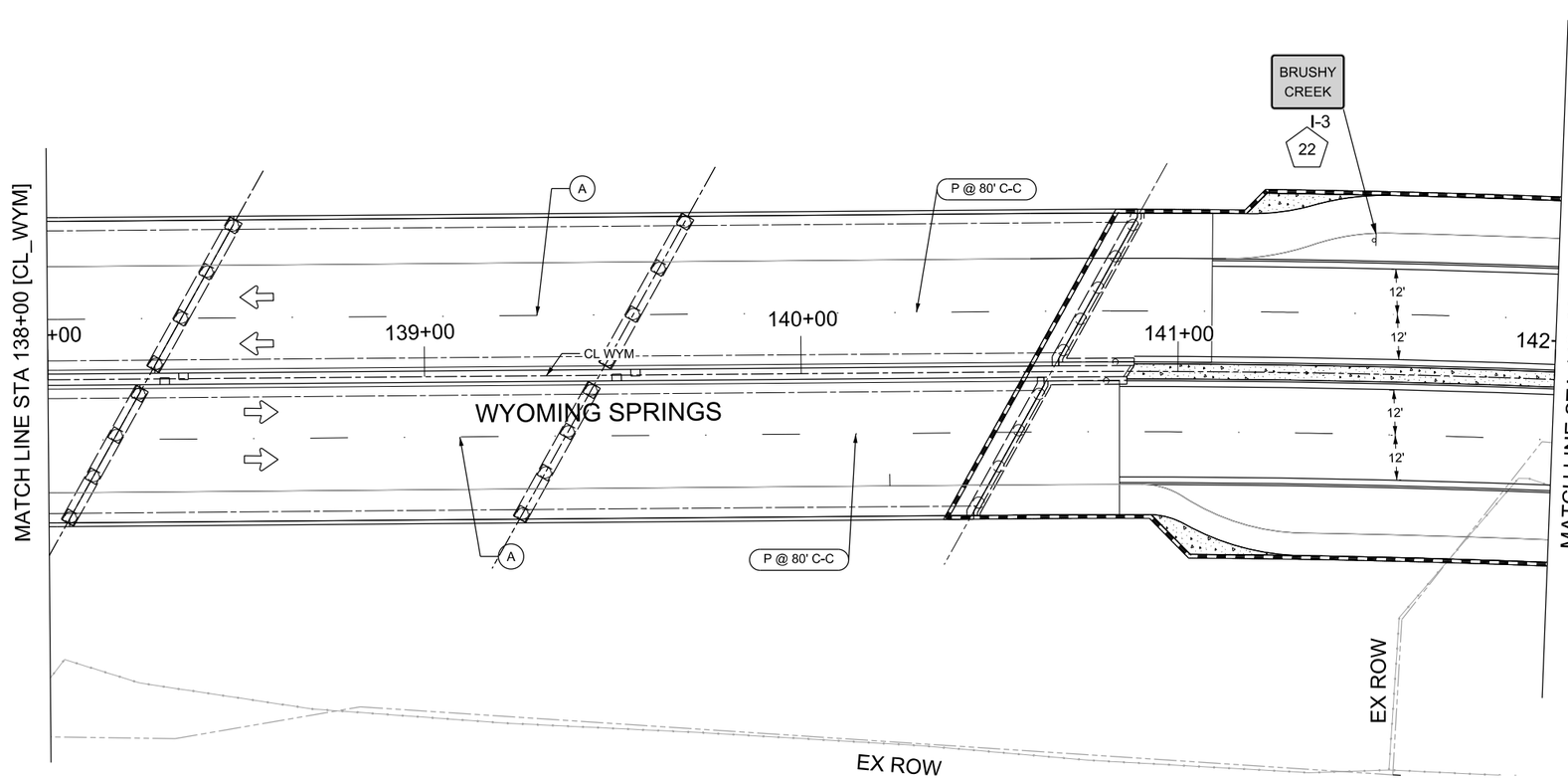

0 20 40 60 80

SCALE: 1"=40'

N

LEGEND

- (A) REFL PAV MRK TYP I (W) (BRK)(4")
- (B) REFL PAV MRK TYP I (W) (SLD)(4")
- (C) REFL PAV MRK TYP I (W) (SLD)(6")
- (D) REFL PAV MRK TYP I (W) (SLD)(8")
- (E) REFL PAV MRK TYP I (W) (SLD)(12")
- (F) REFL PAV MRK TYP I (W) (SLD)(24")
- (G) REFL PAV MRK TYP I (W) (DOT)(4")
- (H) REFL PAV MRK TYP I (Y) (SLD)(4")
- (I) REFL PAV MRK TYP I (Y) (BRK)(4")
- (J) REFL PAV MRK TYP I (W) (ARROW)
- (K) REFL PAV MRK TYP I (W) (WORD)
- (L) REFL PAV MRK TY I (W) (BIKE SYMBOL)
- (M) REFL PAV MRK TY I (W) (BIKE ARROW)
- (N) REFL PAV MRK TY I-C RAISED MARKERS
- (O) REFL PAV MRK TY II-A-A RAISED MARKERS
- (P) REFL PAV MRK TY II-C-R RAISED MARKERS
- DIRECTION OF TRAFFIC
- ROW
- P.U.E.
- TRAFFIC SIGNAL
- (#) PROPOSED SIGN

NOTES:

1. THE LOCATION, MATERIAL, AND ORIENTATION OF THE SIGNS, PAVEMENT MARKINGS, PAVEMENT MARKERS, DELINEATORS, AND OBJECT MARKERS SHALL BE IN ACCORDANCE WITH THE STANDARD DETAILS INCLUDED HERE IN AND THE TEXAS MUTCD.
2. ALL TRAFFIC CONTROL DEVICES SHALL BE LOCATED IN THE FIELD AND APPROVED BY THE CITY TRAFFIC ENGINEER OR DESIGNEE PRIOR TO PLACEMENT.
3. WYOMING SPRINGS BLVD SIGN DETAILS 1.0' RADIUS, 0.4" BORDER, WHITE ON GREEN [WYOMING SPRINGS] CLEARVIEWHWY-4-W; [BLVD] CLEARVIEWHWY-3-W.

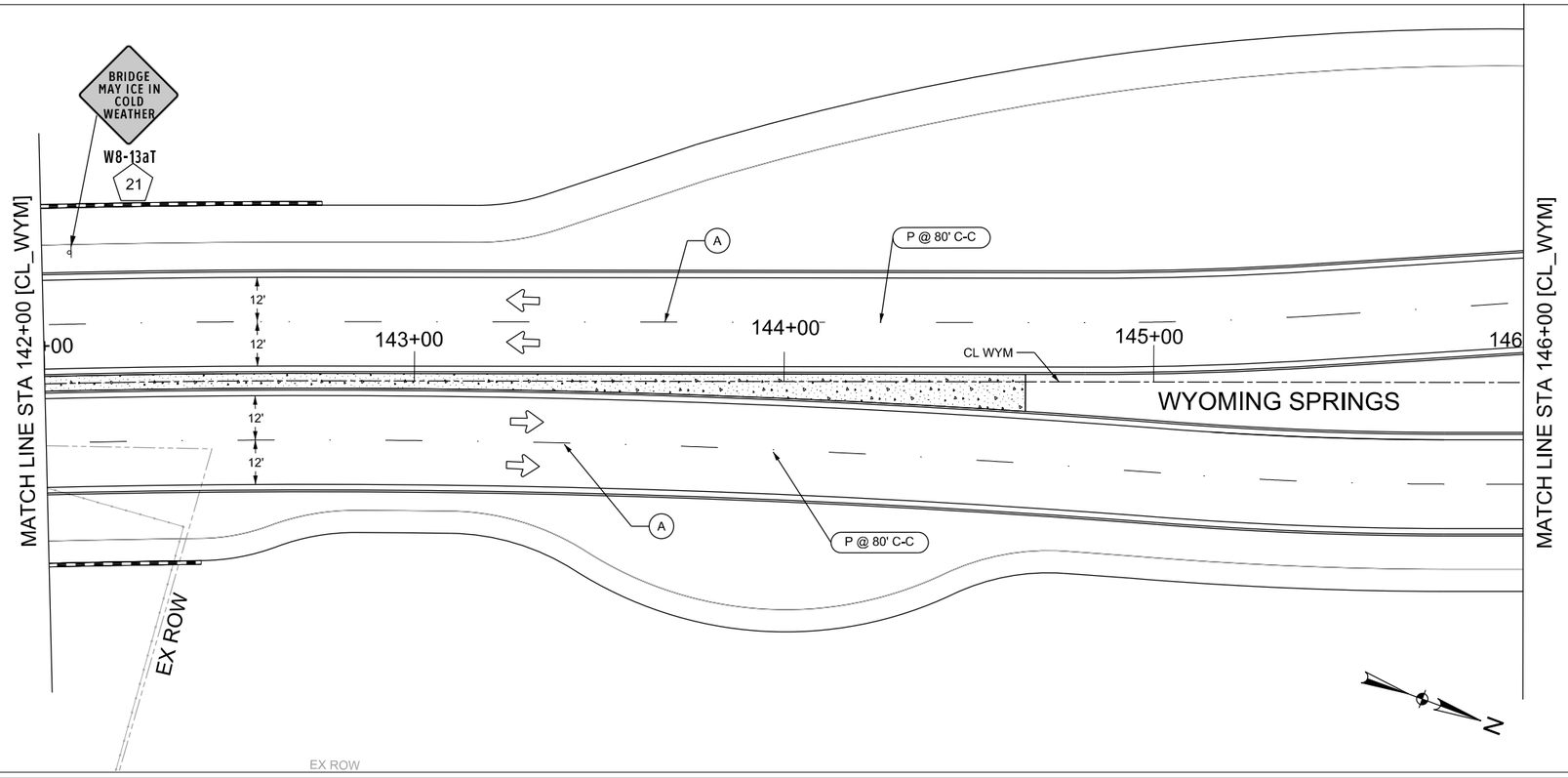

WYOMING SPRINGS
SEGMENT 1
ROUND ROCK, TX

ROUND ROCK TEXAS

halff
13620 BRANTWICK DR
BLDG C, STE 100
AUSTIN, TX 78729
(512) 777-4600
TBPELS FIRM #312

Revision No.	Date	Description

F-312 4/28/23
STATE OF TEXAS
JEFFREY L. NAGY
133255
LICENSED PROFESSIONAL ENGINEER

100% SUBMITTAL

Project No.:	36179.002
Issued:	4/28/2023
Drawn By:	SG
Checked By:	JN
Scale:	1"=40'

Sheet Title
SIGNING & PAVEMENT MARKING LAYOUTS (5 OF10)

360
Sheet Number

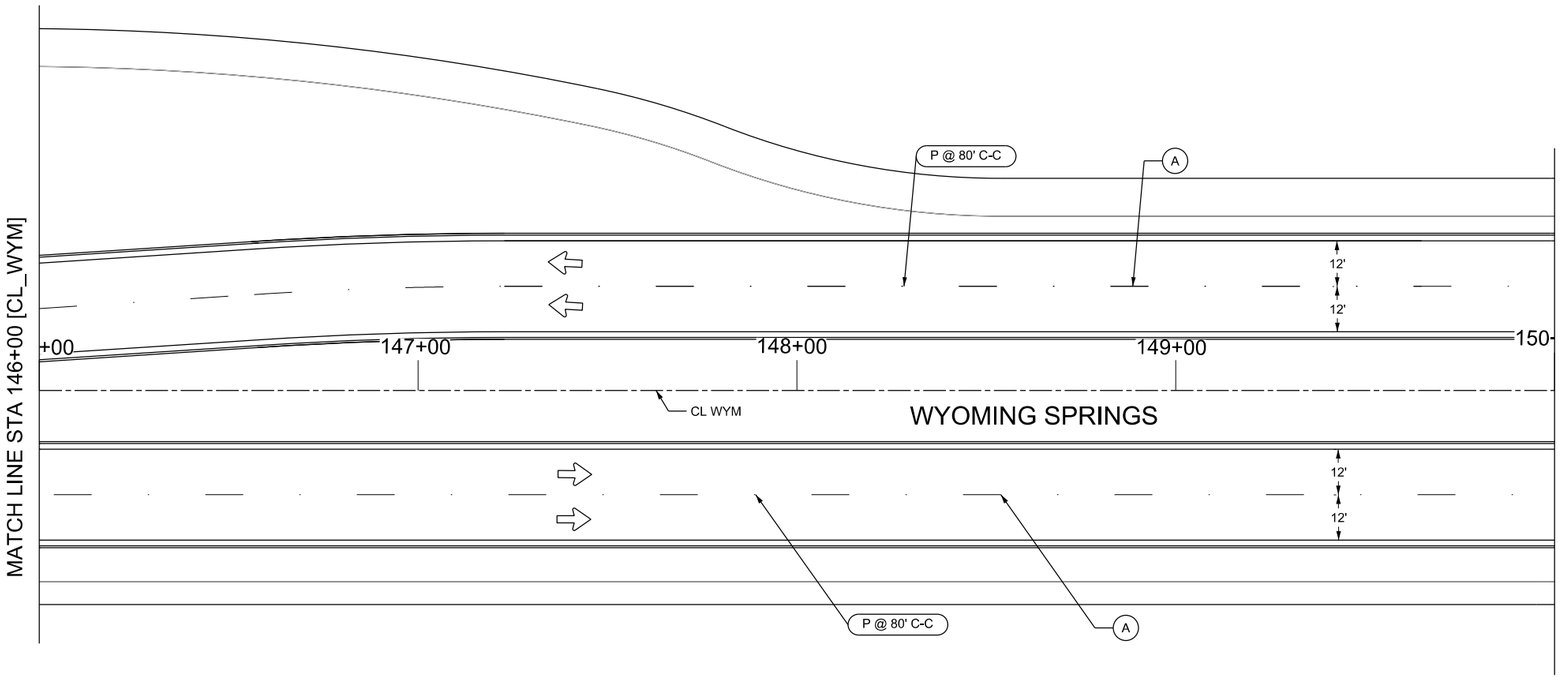

EX ROW

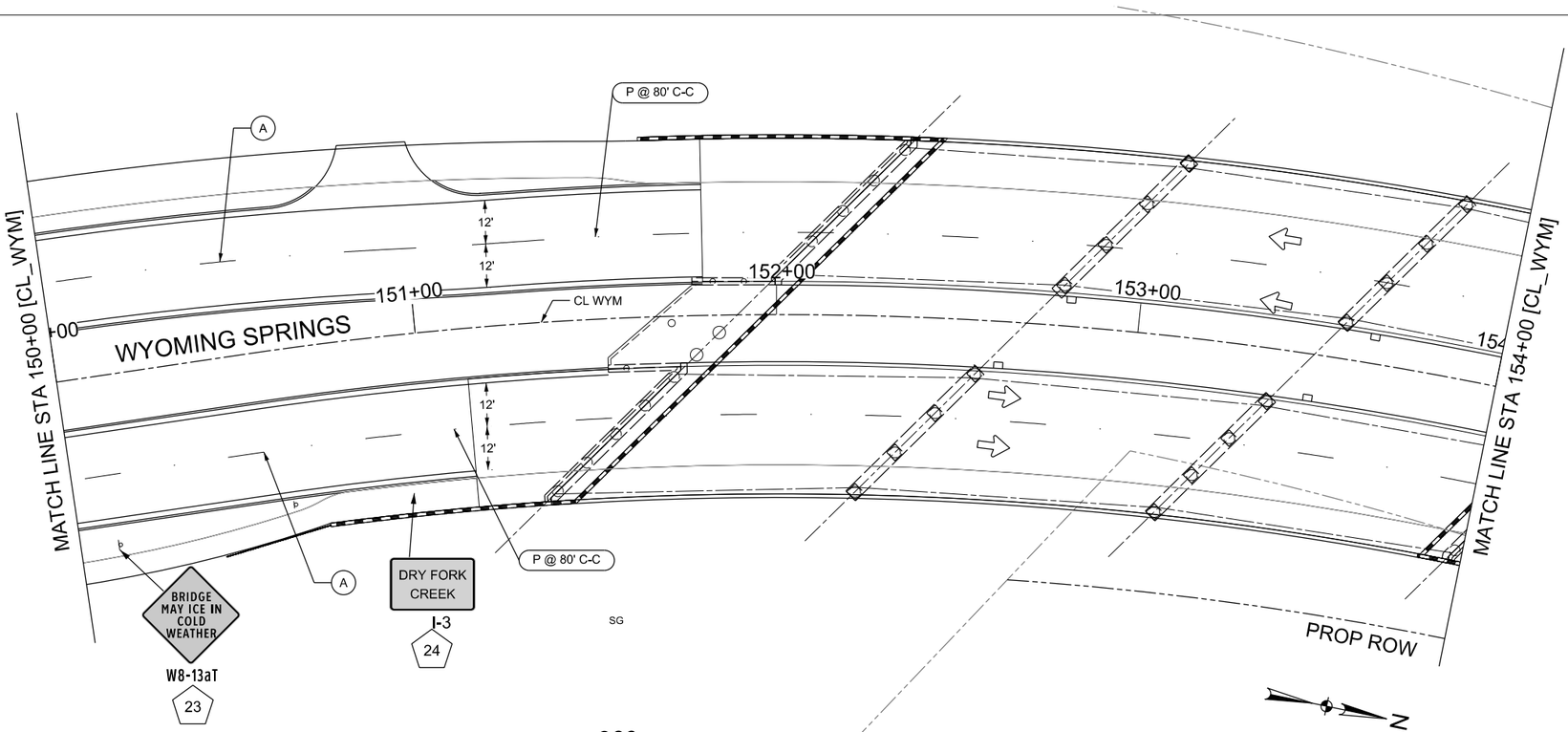

360

0 20 40 60 80

SCALE: 1"=40'

LEGEND

- Ⓐ REFL PAV MRK TYP I (W) (BRK)(4")
- Ⓑ REFL PAV MRK TYP I (W) (SLD)(4")
- Ⓒ REFL PAV MRK TYP I (W) (SLD)(6")
- Ⓓ REFL PAV MRK TYP I (W) (SLD)(8")
- Ⓔ REFL PAV MRK TYP I (W) (SLD)(12")
- Ⓕ REFL PAV MRK TYP I (W) (SLD)(24")
- Ⓖ REFL PAV MRK TYP I (W) (DOT)(4")
- Ⓗ REFL PAV MRK TYP I (Y) (SLD)(4")
- Ⓘ REFL PAV MRK TYP I (Y) (BRK)(4")
- Ⓙ REFL PAV MRK TYP I (W) (ARROW)
- Ⓚ REFL PAV MRK TYP I (W) (WORD)
- Ⓛ REFL PAV MRK TY I (W) (BIKE SYMBOL)
- Ⓜ REFL PAV MRK TY I (W) (BIKE ARROW)
- Ⓝ REFL PAV MRK TY I-C RAISED MARKERS
- Ⓞ REFL PAV MRK TY II-A-A RAISED MARKERS
- Ⓟ REFL PAV MRK TY II-C-R RAISED MARKERS
- DIRECTION OF TRAFFIC
- ROW
- P.U.E.
- TRAFFIC SIGNAL
- (#) PROPOSED SIGN

NOTES:

1. THE LOCATION, MATERIAL, AND ORIENTATION OF THE SIGNS, PAVEMENT MARKINGS, PAVEMENT MARKERS, DELINEATORS, AND OBJECT MARKERS SHALL BE IN ACCORDANCE WITH THE STANDARD DETAILS INCLUDED HERE IN AND THE TEXAS MUTCD.
2. ALL TRAFFIC CONTROL DEVICES SHALL BE LOCATED IN THE FIELD AND APPROVED BY THE CITY TRAFFIC ENGINEER OR DESIGNEE PRIOR TO PLACEMENT.
3. WYOMING SPRINGS BLVD SIGN DETAILS 1.0' RADIUS, 0.4" BORDER, WHITE ON GREEN [WYOMING SPRINGS] CLEARVIEWHWY-4-W; [BLVD] CLEARVIEWHWY-3-W.

WYOMING SPRINGS
SEGMENT 1
ROUND ROCK, TX

ROUND ROCK TEXAS

halff
13620 BRANTWICK DR
BLDG C, STE 100
AUSTIN, TX 78729
(512) 777-4600
TBPELS FIRM #312

Revision No.	Date	Description

F-312 4/28/23

STATE OF TEXAS
JEFFREY L. NAGY
133255
LICENSED PROFESSIONAL ENGINEER

100% SUBMITTAL

Project No.:	36179.002
Issued:	4/28/2023
Drawn By:	SG
Checked By:	JN
Scale:	1"=40'

Sheet Title
SIGNING & PAVEMENT MARKING LAYOUTS (6 OF10)

361
Sheet Number

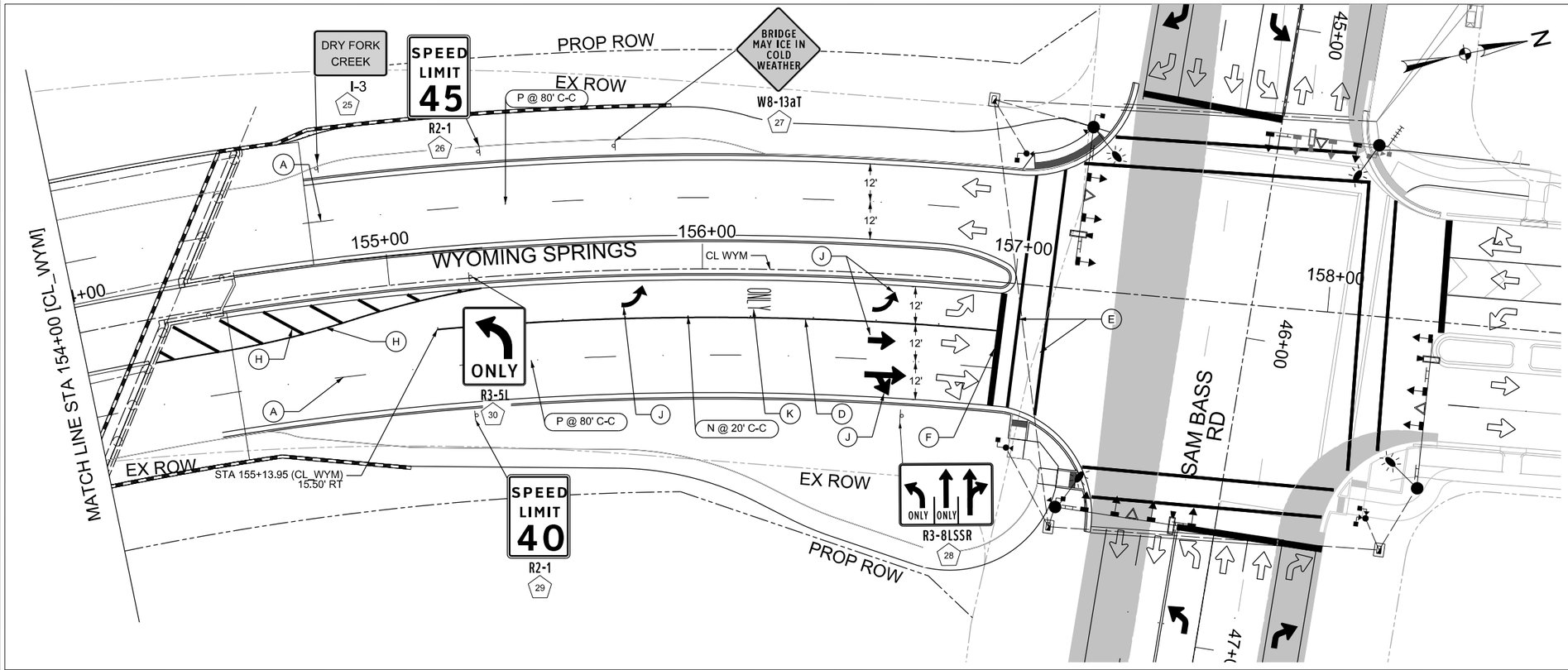

0 20 40 60 80

SCALE: 1"=40'

LEGEND

- Ⓐ REFL PAV MRK TYP I (W) (BRK)(4")
- Ⓑ REFL PAV MRK TYP I (W) (SLD)(4")
- Ⓒ REFL PAV MRK TYP I (W) (SLD)(6")
- Ⓓ REFL PAV MRK TYP I (W) (SLD)(8")
- Ⓔ REFL PAV MRK TYP I (W) (SLD)(12")
- Ⓕ REFL PAV MRK TYP I (W) (SLD)(24")
- Ⓖ REFL PAV MRK TYP I (W) (DOT)(4")
- Ⓗ REFL PAV MRK TYP I (Y) (SLD)(4")
- Ⓘ REFL PAV MRK TYP I (Y) (BRK)(4")
- Ⓙ REFL PAV MRK TYP I (W) (ARROW)
- Ⓚ REFL PAV MRK TYP I (W) (WORD)
- Ⓛ REFL PAV MRK TY I (W) (BIKE SYMBOL)
- Ⓜ REFL PAV MRK TY I (W) (BIKE ARROW)
- Ⓝ REFL PAV MRK TY I-C RAISED MARKERS
- Ⓞ REFL PAV MRK TY II-A-A RAISED MARKERS
- Ⓟ REFL PAV MRK TY II-C-R RAISED MARKERS
- DIRECTION OF TRAFFIC
- ROW
- P.U.E.
- TRAFFIC SIGNAL
- (#) PROPOSED SIGN

NOTES:

1. THE LOCATION, MATERIAL, AND ORIENTATION OF THE SIGNS, PAVEMENT MARKINGS, PAVEMENT MARKERS, DELINEATORS, AND OBJECT MARKERS SHALL BE IN ACCORDANCE WITH THE STANDARD DETAILS INCLUDED HERE IN AND THE TEXAS MUTCD.
2. ALL TRAFFIC CONTROL DEVICES SHALL BE LOCATED IN THE FIELD AND APPROVED BY THE CITY TRAFFIC ENGINEER OR DESIGNEE PRIOR TO PLACEMENT.
3. WYOMING SPRINGS BLVD SIGN DETAILS 1.0' RADIUS, 0.4" BORDER, WHITE ON GREEN [WYOMING SPRINGS] CLEARVIEWHWY-4-W; [BLVD] CLEARVIEWHWY-3-W.

WYOMING SPRINGS
SEGMENT 1
ROUND ROCK, TX

ROUND ROCK TEXAS

halff
13620 BRIARWICK DR
BLDG C, STE 100
AUSTIN, TX 78729
(512) 777-4600
TBPELS FIRM #312

Revision No.	Date	Description
.	.	.
.	.	.
.	.	.
.	.	.
.	.	.
.	.	.
.	.	.
.	.	.
.	.	.

F-312 4/28/23

STATE OF TEXAS
JEFFREY L NAGY
133255
LICENSED
PROFESSIONAL ENGINEER

100% SUBMITTAL

Project No.:	36179.002
Issued:	4/28/2023
Drawn By:	SG
Checked By:	JN
Scale:	1"=40'

Sheet Title
SIGNING & PAVEMENT MARKING LAYOUTS (7 OF10)

362
Sheet Number

User: RDiaz@3boots.com
I:\Active\36179.002\Civil\Sheets\SIGN\36179002_SHMK-07.dgn
4/28/2023 11:29:06 AM
HALFF
ai0914
Date: 4/28/2023
I:\Active\36179.002\Civil\Sheets\SIGN\36179002_SHMK-07.dgn

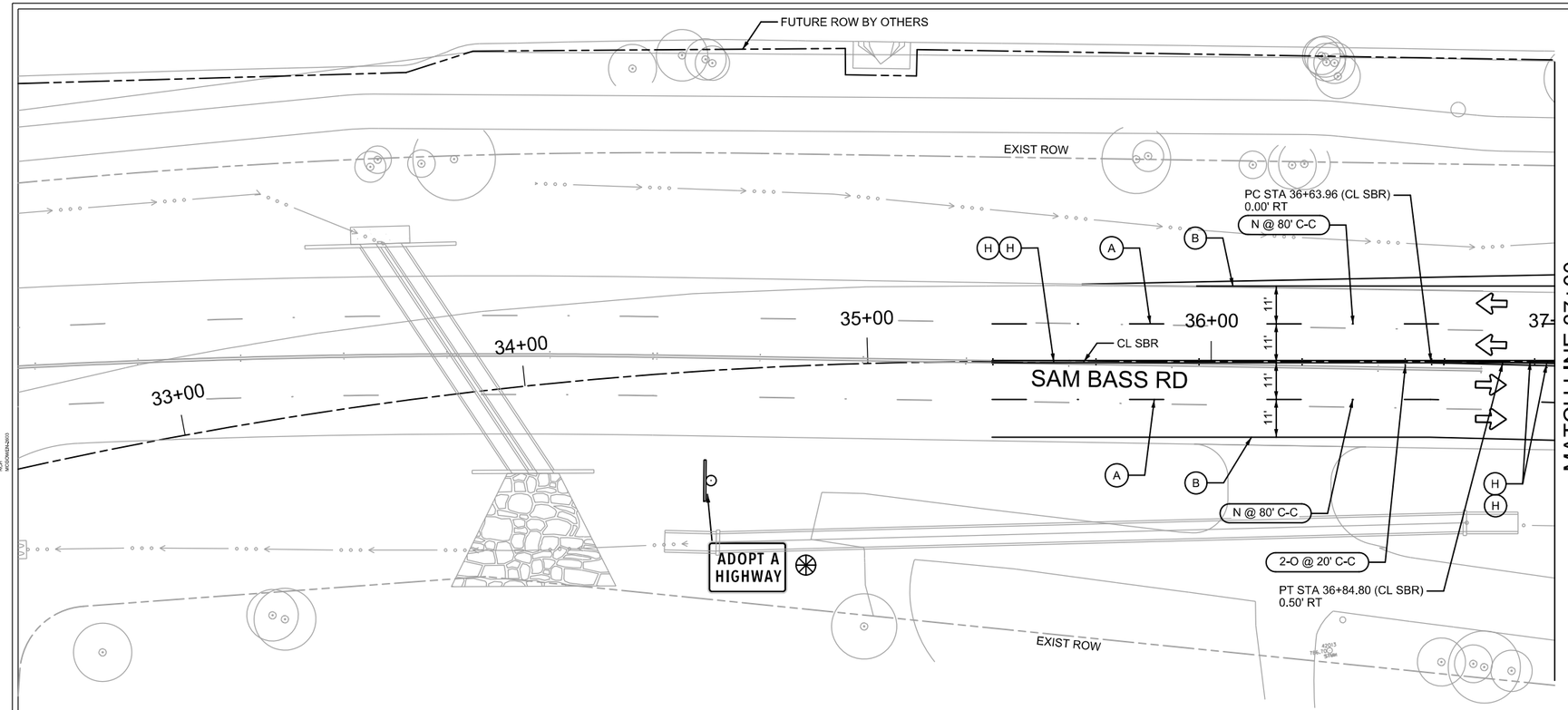

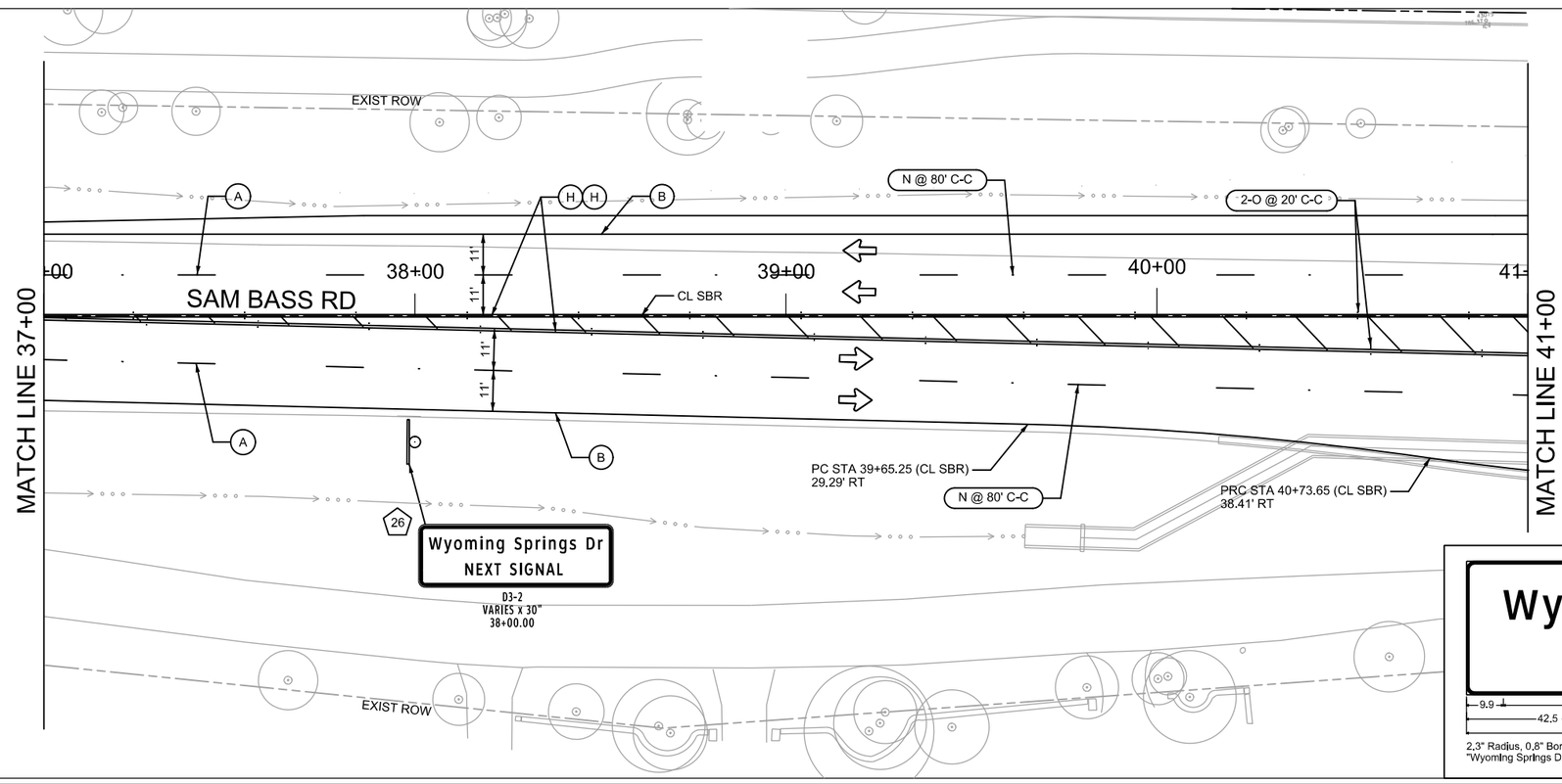



0 20 40 60 80

SCALE: 1"=40'

LEGEND

- (A) REFL PAV MRK TYP I (W) (BRK)(4")
- (B) REFL PAV MRK TYP I (W) (SLD)(4")
- (C) REFL PAV MRK TYP I (W) (SLD)(6")
- (D) REFL PAV MRK TYP I (W) (SLD)(8")
- (E) REFL PAV MRK TYP I (W) (SLD)(12")
- (F) REFL PAV MRK TYP I (W) (SLD)(24")
- (G) REFL PAV MRK TYP I (W) (DOT)(8")
- (H) REFL PAV MRK TYP I (Y) (SLD)(4")
- (I) REFL PAV MRK TYP I (Y) (BRK)(4")
- (J) REFL PAV MRK TYP I (W) (ARROW)
- (K) REFL PAV MRK TYP I (W) (WORD)
- (L) REFL PAV MRK TY I (W) (BIKE SYMBOL)
- (M) REFL PAV MRK TY I (W) (BIKE ARROW)
- (N) REFL PAV MRK TY I-C RAISED MARKERS
- (O) REFL PAV MRK TY II-A-A RAISED MARKERS
- (P) REFL PAV MRK TY II-C-R RAISED MARKERS

DIRECTION OF TRAFFIC
ROW
P.U.E.
TRAFFIC SIGNAL
PROPOSED SIGN
EXISTING SIGN TO REMAIN IN PLACE
EXISTING SIGN TO BE REMOVED
EXISTING SIGN TO BE RELOCATED

NOTES:
1. THE LOCATION, MATERIAL, AND ORIENTATION OF THE SIGNS, PAVEMENT MARKINGS, PAVEMENT MARKERS, DELINEATORS, AND OBJECT MARKERS SHALL BE IN ACCORDANCE WITH THE STANDARD DETAILS INCLUDED HERE IN AND THE TEXAS MUTCD.
2. ALL TRAFFIC CONTROL DEVICES SHALL BE LOCATED IN THE FIELD AND APPROVED BY THE CITY TRAFFIC ENGINEER OR DESIGNEE PRIOR TO PLACEMENT.

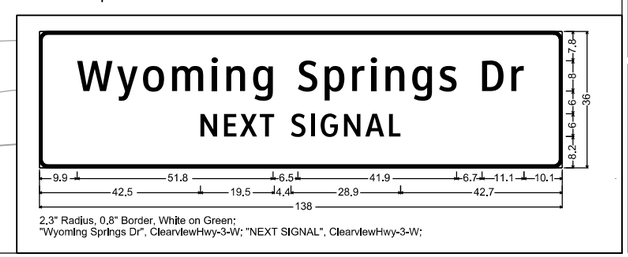

WYOMING SPRINGS
SEGMENT 1
ROUND ROCK, TX

ROUND ROCK TEXAS

halff
13620 BRANTWICK DR
BLDG C, STE 100
AUSTIN, TX 78729
(512) 777-4600
TBPELS FIRM #312

Revision No.	Date	Description

STATE OF TEXAS
MELANIE S. CLEAVELIN
108945
LICENSED
PROFESSIONAL ENGINEER
4/5/23
Melanie S Cleavelin

"THE SEAL APPEARING ON THIS DOCUMENT WAS AUTHORIZED BY MELANIE S. CLEAVELIN, P.E. 108945 ON 4/5/2023. IT IS A VIOLATION OF THE TEXAS ENGINEERING PRACTICE ACT FOR ANY PERSON NOTIFICATION TO THE RESPONSIBLE ENGINEER AN OFFENSE UNDER THE TEXAS ENGINEERING PRACTICE ACT, THE RECORD COPY OF THIS DRAWING IS ON FILE AT THE OFFICES OF HALFF ASSOCIATES, INC., 1201 NORTH BOWSER RD, RICHARDSON, TEXAS, 75081 / (972) 235-3031."

100% SUBMITTAL

Project No.:	36179.002
Issued:	4/6/2023
Drawn By:	TM
Checked By:	MC
Scale:	1"=40'

Sheet Title
SIGNING & PAVEMENT MARKING LAYOUTS (8 OF 10)

363
Sheet Number

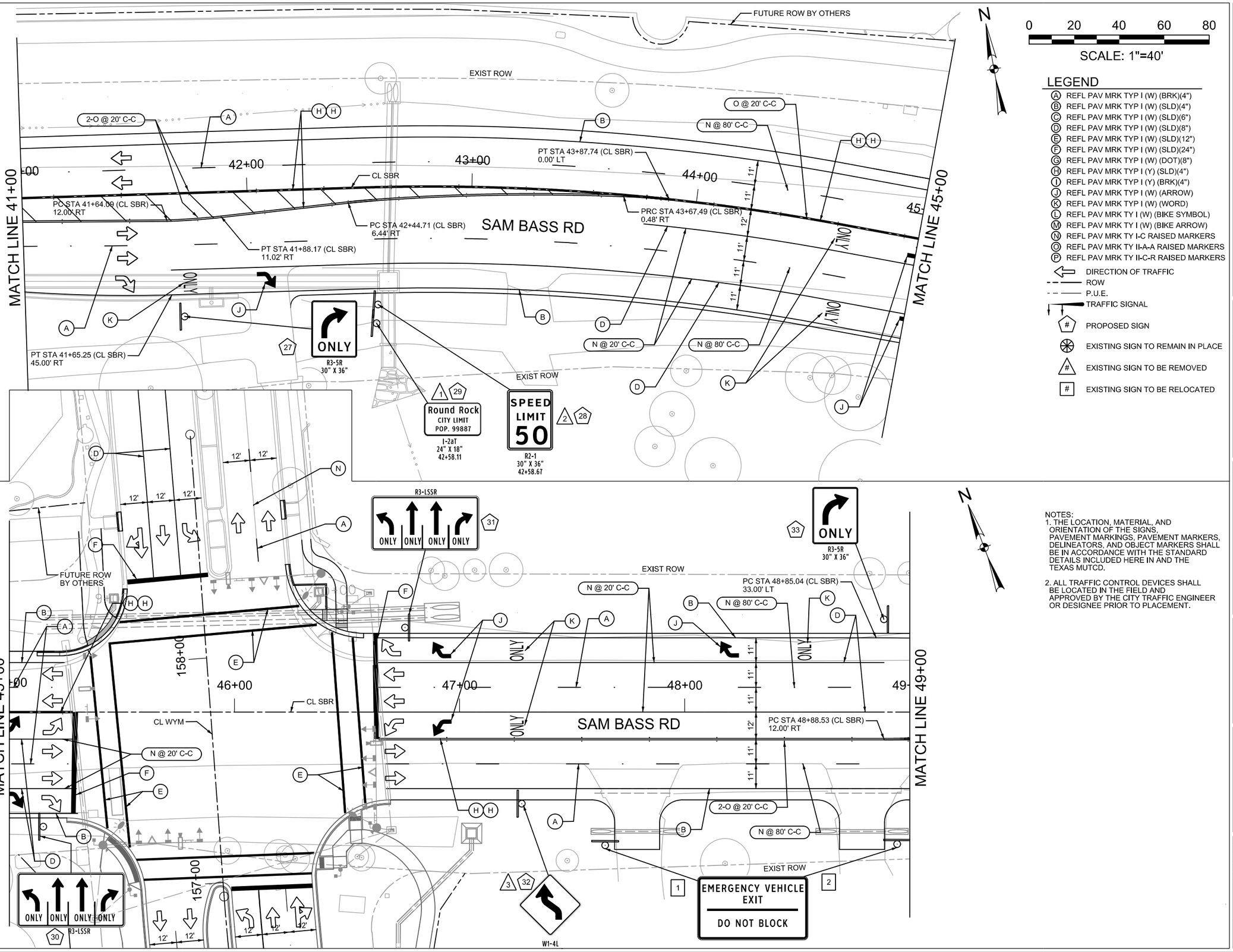

0 20 40 60 80

SCALE: 1"=40'

LEGEND

- (A) REFL PAV MRK TYP I (W) (BRK)(4")
- (B) REFL PAV MRK TYP I (W) (SLD)(4")
- (C) REFL PAV MRK TYP I (W) (SLD)(6")
- (D) REFL PAV MRK TYP I (W) (SLD)(8")
- (E) REFL PAV MRK TYP I (W) (SLD)(12")
- (F) REFL PAV MRK TYP I (W) (SLD)(24")
- (G) REFL PAV MRK TYP I (W) (DOT)(8")
- (H) REFL PAV MRK TYP I (Y) (SLD)(4")
- (I) REFL PAV MRK TYP I (Y) (BRK)(4")
- (J) REFL PAV MRK TYP I (W) (ARROW)
- (K) REFL PAV MRK TYP I (W) (WORD)
- (L) REFL PAV MRK TY I (W) (BIKE SYMBOL)
- (M) REFL PAV MRK TY I (W) (BIKE ARROW)
- (N) REFL PAV MRK TY I-C RAISED MARKERS
- (O) REFL PAV MRK TY II-A-A RAISED MARKERS
- (P) REFL PAV MRK TY II-C-R RAISED MARKERS
- DIRECTION OF TRAFFIC
- ROW
- P.U.E.
- TRAFFIC SIGNAL
- PROPOSED SIGN
- EXISTING SIGN TO REMAIN IN PLACE
- EXISTING SIGN TO BE REMOVED
- EXISTING SIGN TO BE RELOCATED

NOTES:

1. THE LOCATION, MATERIAL, AND ORIENTATION OF THE SIGNS, PAVEMENT MARKINGS, PAVEMENT MARKERS, DELINEATORS, AND OBJECT MARKERS SHALL BE IN ACCORDANCE WITH THE STANDARD DETAILS INCLUDED HERE IN AND THE TEXAS MUTCD.
2. ALL TRAFFIC CONTROL DEVICES SHALL BE LOCATED IN THE FIELD AND APPROVED BY THE CITY TRAFFIC ENGINEER OR DESIGNEE PRIOR TO PLACEMENT.

WYOMING SPRINGS
SEGMENT 1
ROUND ROCK, TX

ROUND ROCK TEXAS

halff
13620 BRIARWICK DR
BLDG C, STE 100
AUSTIN, TX 78729
(512) 777-4600
TBPELS FIRM #312

Revision No.	Date	Description

STATE OF TEXAS
MELANIE S. CLEAVELIN
108945
LICENSED PROFESSIONAL ENGINEER
4/5/23

Melanie S Cleavelin

THE SEAL APPEARING ON THIS DOCUMENT WAS AUTHORIZED BY MELANIE S. CLEAVELIN, P.E., 108945 ON 4/5/2023. ALTERATION OF A SEALED DOCUMENT WITHOUT PROPER NOTIFICATION TO THE RESPONSIBLE ENGINEER IS AN OFFENSE UNDER THE TEXAS ENGINEERING PRACTICE ACT. THE RECORD COPY OF THIS DRAWING IS ON FILE AT THE OFFICES OF HALFF ASSOCIATES, INC., 1201 NORTH BOWSER RD, RICHARDSON, TEXAS, 75081. TBPE FIRM #F-312.

100% SUBMITTAL

Project No.:	36179.002
Issued:	4/6/2023
Drawn By:	TM
Checked By:	MC
Scale:	1"=40'

Sheet Title
SIGNING & PAVEMENT MARKING LAYOUTS
(9 OF 10)

364
Sheet Number

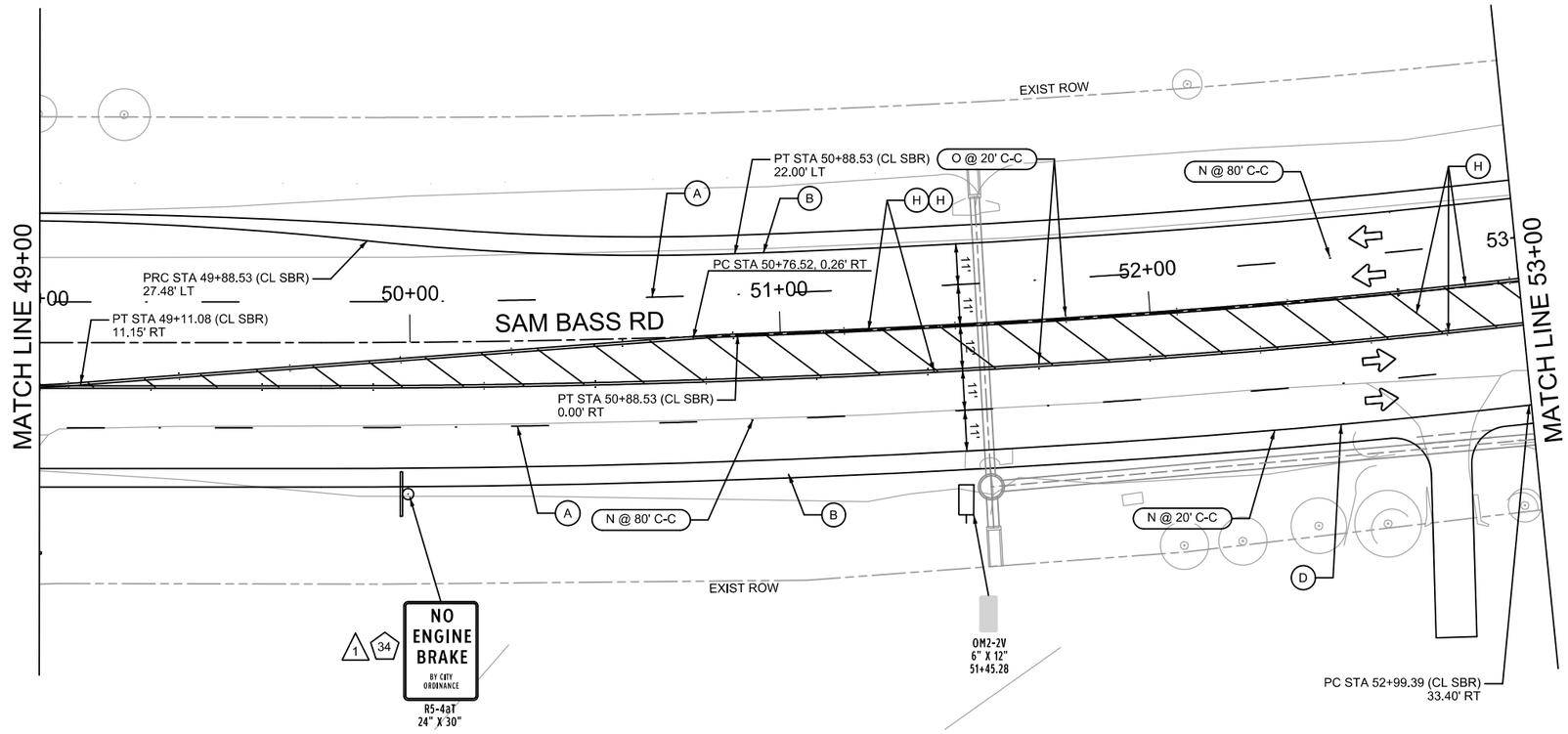

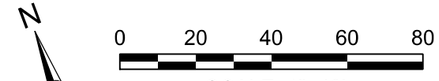

SCALE: 1"=40'

LEGEND

- (A) REFL PAV MRK TYP I (W) (BRK)(4")
- (B) REFL PAV MRK TYP I (W) (SLD)(4")
- (C) REFL PAV MRK TYP I (W) (SLD)(6")
- (D) REFL PAV MRK TYP I (W) (SLD)(8")
- (E) REFL PAV MRK TYP I (W) (SLD)(12")
- (F) REFL PAV MRK TYP I (W) (SLD)(24")
- (G) REFL PAV MRK TYP I (W) (DOT)(8")
- (H) REFL PAV MRK TYP I (Y) (SLD)(4")
- (I) REFL PAV MRK TYP I (Y) (BRK)(4")
- (J) REFL PAV MRK TYP I (W) (ARROW)
- (K) REFL PAV MRK TYP I (W) (WORD)
- (L) REFL PAV MRK TY I (W) (BIKE SYMBOL)
- (M) REFL PAV MRK TY I (W) (BIKE ARROW)
- (N) REFL PAV MRK TY I-C RAISED MARKERS
- (O) REFL PAV MRK TY II-A-A RAISED MARKERS
- (P) REFL PAV MRK TY II-C-R RAISED MARKERS
- DIRECTION OF TRAFFIC
- ROW
- P.U.E.
- TRAFFIC SIGNAL
- PROPOSED SIGN
- EXISTING SIGN TO REMAIN IN PLACE
- EXISTING SIGN TO BE REMOVED
- EXISTING SIGN TO BE RELOCATED

NOTES:
1. THE LOCATION, MATERIAL, AND ORIENTATION OF THE SIGNS, PAVEMENT MARKINGS, PAVEMENT MARKERS, DELINEATORS, AND OBJECT MARKERS SHALL BE IN ACCORDANCE WITH THE STANDARD DETAILS INCLUDED HERE IN AND THE TEXAS MUTCD.
2. ALL TRAFFIC CONTROL DEVICES SHALL BE LOCATED IN THE FIELD AND APPROVED BY THE CITY TRAFFIC ENGINEER OR DESIGNEE PRIOR TO PLACEMENT.

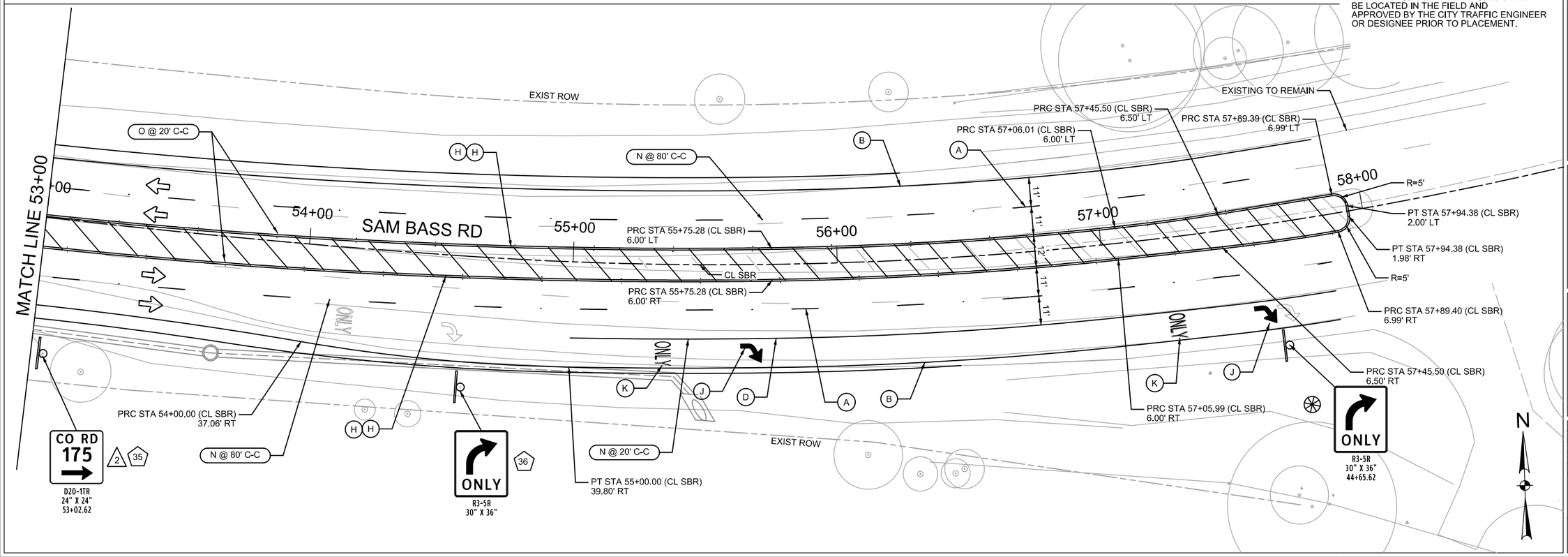

WYOMING SPRINGS
SEGMENT 1
ROUND ROCK, TX

ROUND ROCK TEXAS

halff
13620 BRIARWICK DR
BLDG C, STE 100
AUSTIN, TX 78729
(512) 777-4600
TBPELS FIRM #312

Revision		
No.	Date	Description

STATE OF TEXAS
MELANIE S. CLEAVELIN
108945
LICENSED PROFESSIONAL ENGINEER
4/5/23
Melanie S Cleavelin

THE SEAL APPEARING ON THIS DOCUMENT WAS AUTHORIZED BY MELANIE S. CLEAVELIN, P.E., 108945 ON 4/5/2023. ALTERATION OF A SEALED DOCUMENT WITHOUT PROPER NOTIFICATION TO THE RESPONSIBLE ENGINEER IS AN OFFENSE UNDER THE TEXAS ENGINEERING PRACTICE ACT. THE RECORD COPY OF THIS DRAWING IS ON FILE AT THE OFFICES OF HALFF ASSOCIATES, INC., 1201 NORTH BOWSER RD, RICHARDSON, TEXAS, 75081. TBPE FIRM #4312.

100% SUBMITTAL

Project No.:	36179.002
Issued:	4/6/2023
Drawn By:	TM
Checked By:	MC
Scale:	1"=40'

Sheet Title
SIGNING & PAVEMENT MARKING LAYOUTS (10 OF 10)

365
Sheet Number

EXISTING SIGNALS

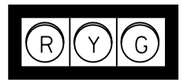

SIGNALS
A, B, D, H, I

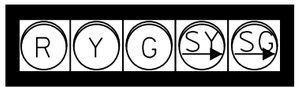

SIGNALS
C, E

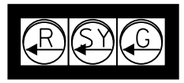

SIGNALS
F, G

EXISTING SIGNS

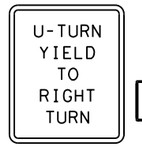

R10-16
(30"X36")
S1

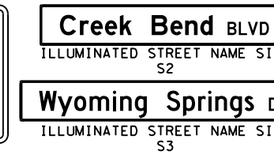

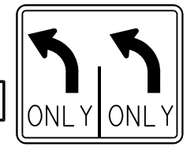

R3-8LL
(36"X36")
S5



EXISTING LEGEND

EA, EB, etc.	EXIST SIGNAL HEAD NUMBER
S#	SIGN NUMBER
V#	VIVDS CAMERA NUMBER
RPDD#	RADAR PRESENCE/ADVANCED DETECTOR NUMBER
PB#	PEDESTRIAN PUSH BUTTON NUMBER
P#	PEDESTRIAN SIGNAL HEAD NUMBER
	TRAFFIC CONTROLLER
	SIGNAL HEAD
	SIGNAL POLE AND MAST ARM
	PEDESTRIAN SIGNAL HEAD W/ PUSH BUTTON
	LUMINAIRE
	GROUND BOX
	ELECRICAL SERVICE METER
	SIGN
	RADAR ADVANCE DETECTOR
	RADAR PRESENCE DETECTOR
	SINGLE PREEMPTION
	PTZ CAMERA
	NETWORK ANTENNA

EXISTING PEDESTRIAN SIGNALS & DETECTORS



R10-3e(L)
(9"x15")
PUSH BUTTONS
PB1, PB3,
PB5, PB7

R10-3e(R)
(9"x15")
PUSH BUTTONS
PB2, PB4,
PB6, PB8

PED SIGNALS
P1-P8

NOTES:

1. DETERMINATION OF SALVAGE MATERIAL SHALL BE FINALIZED BY CITY ENGINEER AND DELIVERED TO CITY OF ROUND ROCK TRAFFIC OPERATIONS FACILITY. THE CONTRACTOR SHALL CONTACT THE CITY ENGINEER SEVEN (7) DAYS PRIOR TO DELIVERY OF SALVAGED MATERIAL. THE CONTRACTOR SHALL BECOME THE OWNER AND DISPOSE OF UNSALVAGED MATERIAL IN ACCORDANCE WITH FEDERAL, STATE AND LOCAL REGULATIONS.

0 15 30
SCALE: 1"=30'

WYOMING SPRINGS
SEGMENT 1
ROUND ROCK, TX

ROUND ROCK TEXAS

BGE Inc.
7330 San Pedro, Suite 202, San Antonio, TX 78216
Tel: 210-581-3600 • www.bgeinc.com
TBPE Registration No. F-1046

Revision No.	Date	Description

4/5/2023

STATE OF TEXAS
SHAUN E. SPIVEY
114567
LICENSED
PROFESSIONAL ENGINEER

Project No.:	
Issued:	
Drawn By:	
Checked By:	
Scale:	

Sheet Title
EXISTING SIGNAL LAYOUT WYOMING SPRINGS AT CREEK BEND

366
Sheet Number

PROPOSED SIGNALS

(12" L.E.D. SIGNALS w/ BACKPLATES)

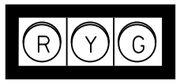

SIGNALS
L, M

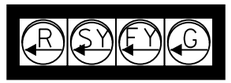

SIGNALS
J, K

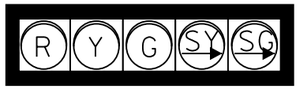

SIGNALS
N

PROPOSED SIGNS

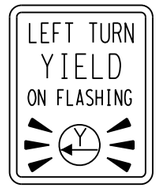

R10-17(MOD)
(36"X42")
S6, S8



ILLUMINATED STREET NAME SIGN
S7



PROPOSED LEGEND

(#)	RUN NUMBER
A, B, etc.	SIGNAL HEAD NUMBER
S#	SIGN NUMBER
V#	VIVDS CAMERA NUMBER
PB#	PEDESTRIAN PUSH BUTTON NUMBER
P#	PEDESTRIAN SIGNAL HEAD NUMBER
	TRAFFIC CONTROLLER W/ BACKUP BATTERY UNIT
	HORIZONTAL SIGNAL HEAD
	SIGNAL POLE AND MAST ARM
	PEDESTRIAN SIGNAL HEAD W/ PUSH BUTTON
	LUMINAIRE
	GROUND BOX W/ CONCRETE APRON
	ELECRICAL SERVICE METER
	SIGN
	VIVDS CAMERA
	SINGLE PREEMPTION
	PTZ CAMERA
	NETWORK ANTENNA
	UNDERGROUND CONDUIT (TRENCH)
	UNDERGROUND CONDUIT (BORE)
	VIVDS CAMERA ZONES
	RED-CONFIRMATION LIGHTS '(THRU AND LT PHASES)

NOTES:

1. CONTRACTOR SHALL ATTEND A PRE-CONSTRUCTION MEETING WITH THE ENGINEER PRIOR TO INITIATING ANY TRAFFIC SIGNAL RELATED WORK.
2. CONTRACTOR SHALL CONTACT THE ENGINEER AT LEAST SEVEN (7) DAYS PRIOR TO BEGINNING ANY CONSTRUCTION. THE CITY WILL PROVIDE ALL ON-SITE INSPECTION OF CONSTRUCTION.
3. CONTRACTOR SHALL UNCOVER AND LOCATE ALL MARKED UNDERGROUND FACILITIES PRIOR TO EXCAVATION FOR DRILL SHAFT AND FOUNDATIONS. UTILITIES SHOWN ARE BASED ON INFORMATION PROVIDED BY UTILITY AGENCIES AND VISUAL FIELD OBSERVATION. PROPERTY LINES SHOWN ARE APPROXIMATE.
4. CONTRACTOR SHALL PROVIDE RED-LINE MARKUPS OF CONSTRUCTION TO THE ENGINEER WITHIN SEVEN (7) WORKING DAYS OF PROJECT ACCEPTANCE.
5. CONTRACTOR SHALL INSTALL TRAFFIC SIGNAL HEADS CENTERED OVER LANES WHEN POSSIBLE (MINIMUM 8' APART) OR AS DIRECTED BY THE ENGINEER.
6. ANY SIGNS MOUNTED ON TRAFFIC SIGNAL EQUIPMENT SHALL BE FURNISHED AND INSTALLED BY THE CONTRACTOR AS SHOWN ON THE PLANS.
7. ADJUST DRILL SHAFT FOUNDATIONS AS NEEDED TO MEET VERTICAL AND/OR HORIZONTAL CLEARANCE.
8. SEE ELEVATION SHEETS FOR SPECIALIZED EQUIPMENT TO BE USED.
9. PROPOSED SIDEWALK SHALL BE EXTENDED UP TO SIGNAL POLES AS NEEDED TO PROVIDE ACCESS TO PEDESTRIAN PUSH BUTTONS.

0 15 30
SCALE: 1"=30'

WYOMING SPRINGS
SEGMENT 1
ROUND ROCK, TX

ROUND ROCK TEXAS

BGE Inc.
7330 San Pedro, Suite 202, San Antonio, TX 78216
Tel: 210-581-3600 • www.bgeinc.com
TBPE Registration No. F-1046

Revision No.	Date	Description

4/5/2023

STATE OF TEXAS
SHAUN E. SPIVEY
114567
LICENSED
PROFESSIONAL ENGINEER

Project No.:	
Issued:	
Drawn By:	
Checked By:	
Scale:	

Sheet Title
PROPOSED SIGNAL LAYOUT WYOMING SPRINGS AT CREEK BEND

367

Sheet Number

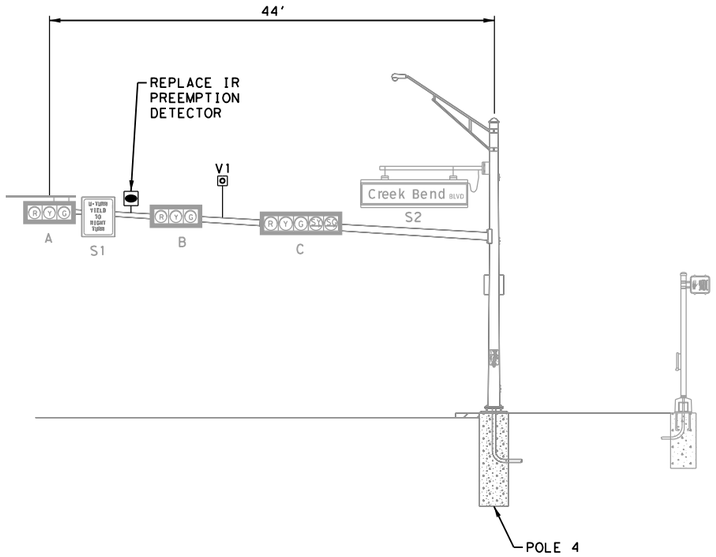

NORTHBOUND ON WYOMING SPRINGS DR
NOT TO SCALE

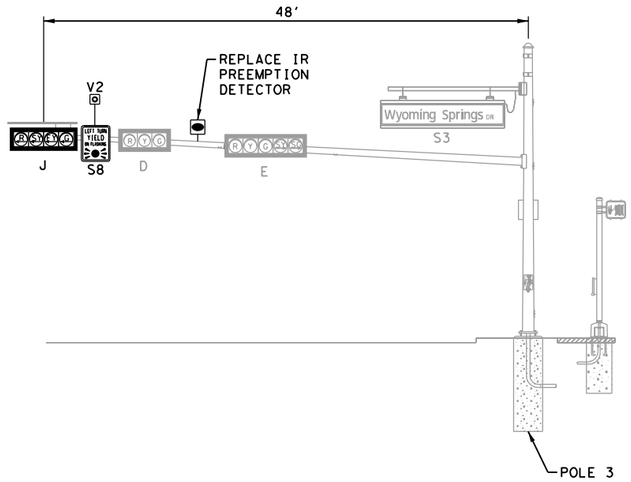

EASTBOUND ON BRIGHTWATER BLVD
NOT TO SCALE

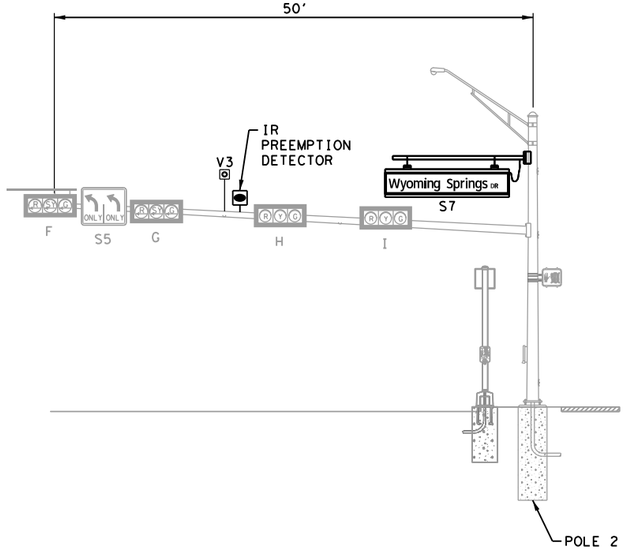

WESTBOUND ON CREEK BEND BLVD
NOT TO SCALE

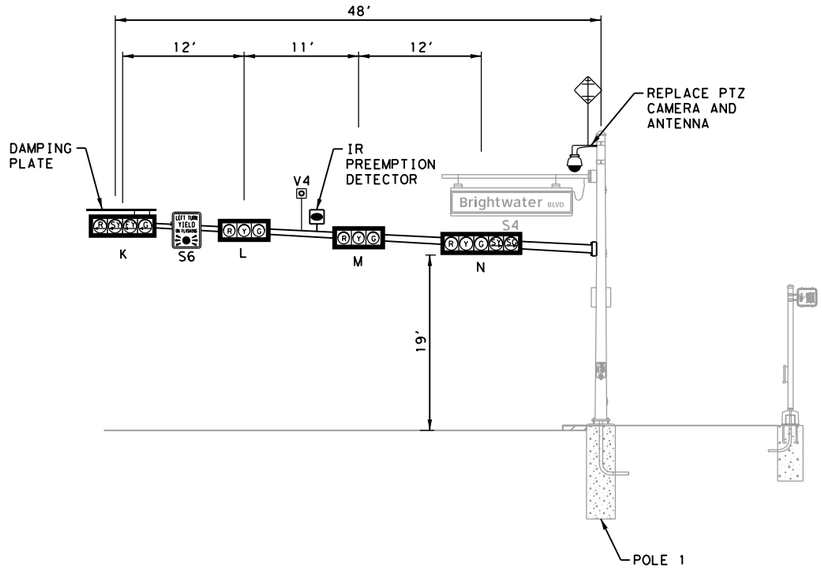

SOUTHBOUND ON WYOMING SPRINGS DR
NOT TO SCALE

NOTES:
1. VIVDS V2 AND V4 SHALL BE 'ITERIS VANTAGE VECTOR/VANTAGE NEXT HYBRID' CAMERAS AND VIVDS V1 AND V3 SHALL BE 'ITERIS NEXT' CAMERAS.
2. ADD DAMPING PLATE AT END OF PROPOSED MAST ARM ON EXISTING POLE 1.

WYOMING SPRINGS
SEGMENT 1
ROUND ROCK, TX

ROUND ROCK TEXAS

BGE, Inc.
7330 San Pedro, Suite 202, San Antonio, TX 78216
Tel: 210-581-3600 • www.bgeinc.com
TBPE Registration No. F-1046

Revision No.	Date	Description

4/5/2023
STATE OF TEXAS
SHAUN E. SPIVEY
114567
LICENSED
PROFESSIONAL ENGINEER

Project No.:	
Issued:	
Drawn By:	
Checked By:	
Scale:	

Sheet Title
PROPOSED SIGNAL ELEVATIONS WYOMING SPRINGS AT CREEK BEND

368
Sheet Number

SUMMARY OF CONDUITS AND CABLES WYOMING SPRINGS AT CREEK BEND BLVD							
POLE NO.	EST LENGTH *	NUMBER OF CABLES					
		#8 AWG (INS)	#8 AWG (BARE)	#14 AWG 20/C	4/C SHLD PREEMPT	VIVDS CABLING (CAT 5)	#12 AWG 3/C
1	60			1	1	1	
2	140'				1	1	
3	180			1		1	1
4	250'					1	
TOTAL (LF)				240'	200'	630'	180'

* = ESTIMATED LENGTH BACK TO CONTROLLER

MAST-ARM AND POLE SUMMARY - WYOMING SPRINGS AT CREEK BEND BLVD						
POLES AND ARMS	#14 AWG			4/C SHLD PREEMPT	VIVDS CABLING (CAT 5)	#12 AWG 3/C
	2/C	5/C	7/C			
EXIST POLE 1 (w/ PROP 48' ARM)				50'	55'	
HEAD K			70'			
HEAD L		60'				
HEAD M		50'				
HEAD N	40'	40'				
EXIST POLE 2 (w/ EXIST 50' ARM)				50'	55'	
S2						35'
EXIST POLE 3 (w/ EXIST 48' ARM)					55'	
HEAD J			70'			
EXIST POLE 4 (w/ EXIST 44' ARM)					50'	
TOTAL (LF)	40'	150'	140'	100'	215'	35'

CABLE TERMINATION CHART		
CONDUCTOR COLOR	CABLE 1 FROM POLE 1 TO CONTROL	CABLE 2 FROM POLE 3 TO CONTROL
BLACK	P.B. COMMON	P.B. COMMON
WHITE	S. COMMON	S. COMMON
RED	SH L,M,N Ø8 R	SH D,E Ø2 R
GREEN	SH L,M,N Ø8,G	SH D,E Ø2,G
ORANGE	SH L,M,N Ø8 Y	SH D,E Ø2 Y
BLUE	SH K, Ø3 R	SH J, Ø5 R
WHITE/BLACK	SH K, Ø3 G	SH J, Ø5 G
RED/BLACK	SH K, Ø3 Y	SH J, Ø5 Y
GREEN/BLACK	SH K, Ø3 FY	SH J, Ø5 FY
ORANGE/BLACK	Ø8 APS	Ø4 APS
BLUE/BLACK	Ø8 APS	Ø4 APS
BLACK/WHITE	P5 W	P3 W
RED/WHITE	P5 DW	P3 DW
GREEN/WHITE	SH N, OLB G	SH E, OLC G
BLUE/WHITE	SH N, OLB Y	SH E, OLC Y
BLACK/RED	SPARE	SPARE
WHITE/RED	SPARE	SPARE
ORANGE/RED	SPARE	SPARE
BLUE/RED	SPARE	SPARE
RED/GREEN	SPARE	SPARE

SPLICE SIGNAL HEAD E INTO EXISTING THRU PHASE Ø2

PHASING ORIENTATION DIAGRAM

NOT TO SCALE

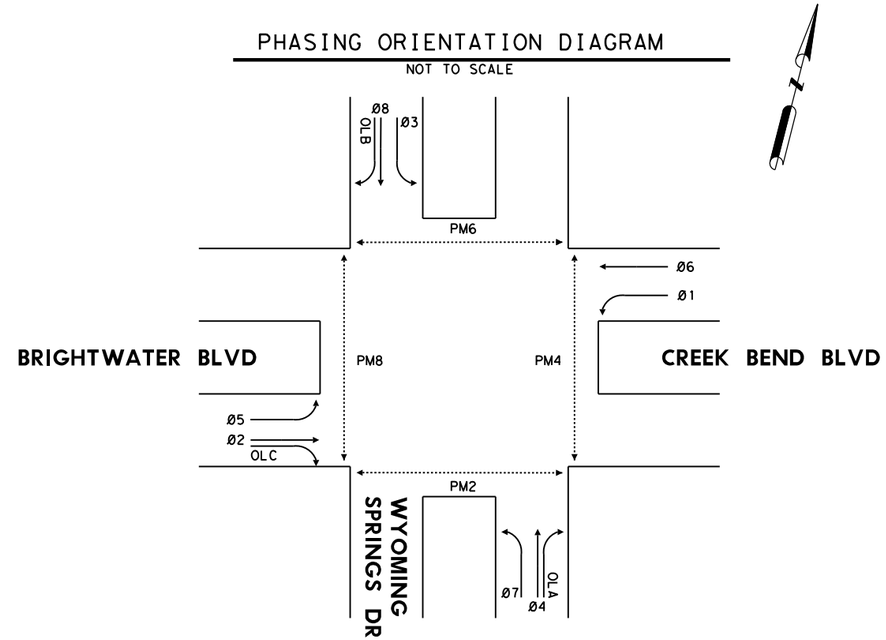

PHASING DIAGRAM

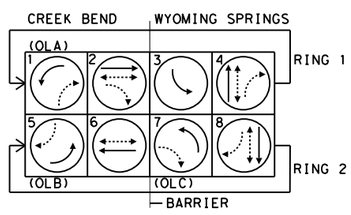

OLA = PHASE 1
OLB = PHASE 5
OLC = PHASE 7

WYOMING SPRINGS
SEGMENT 1
ROUND ROCK, TX

ROUND ROCK TEXAS

BGE, Inc.
7330 San Pedro, Suite 202, San Antonio, TX 78216
Tel: 210-581-3600 • www.bgeinc.com
TBPE Registration No. F-1046

Revision		
No.	Date	Description

4/5/2023

STATE OF TEXAS
SHAUN E. SPIVEY
114567
LICENSED
PROFESSIONAL ENGINEER

Project No.:
Issued:
Drawn By:
Checked By:
Scale:
Sheet Title
PROPOSED SIGNAL ELECTRICAL SCHEDULE WYOMING SPRINGS AT CREEK BEND

369

Sheet Number

EXISTING SIGNALS

SIGNALS
A, B, C, D, E, F

EXISTING SIGNS

LEFT TURN
YIELD
ON GREEN

R10-12
(30"X36")
S1

Wyoming Springs DR
ILLUMINATED STREET NAME SIGN
S2, S4

FM 3406
ILLUMINATED STREET NAME SIGN
S3

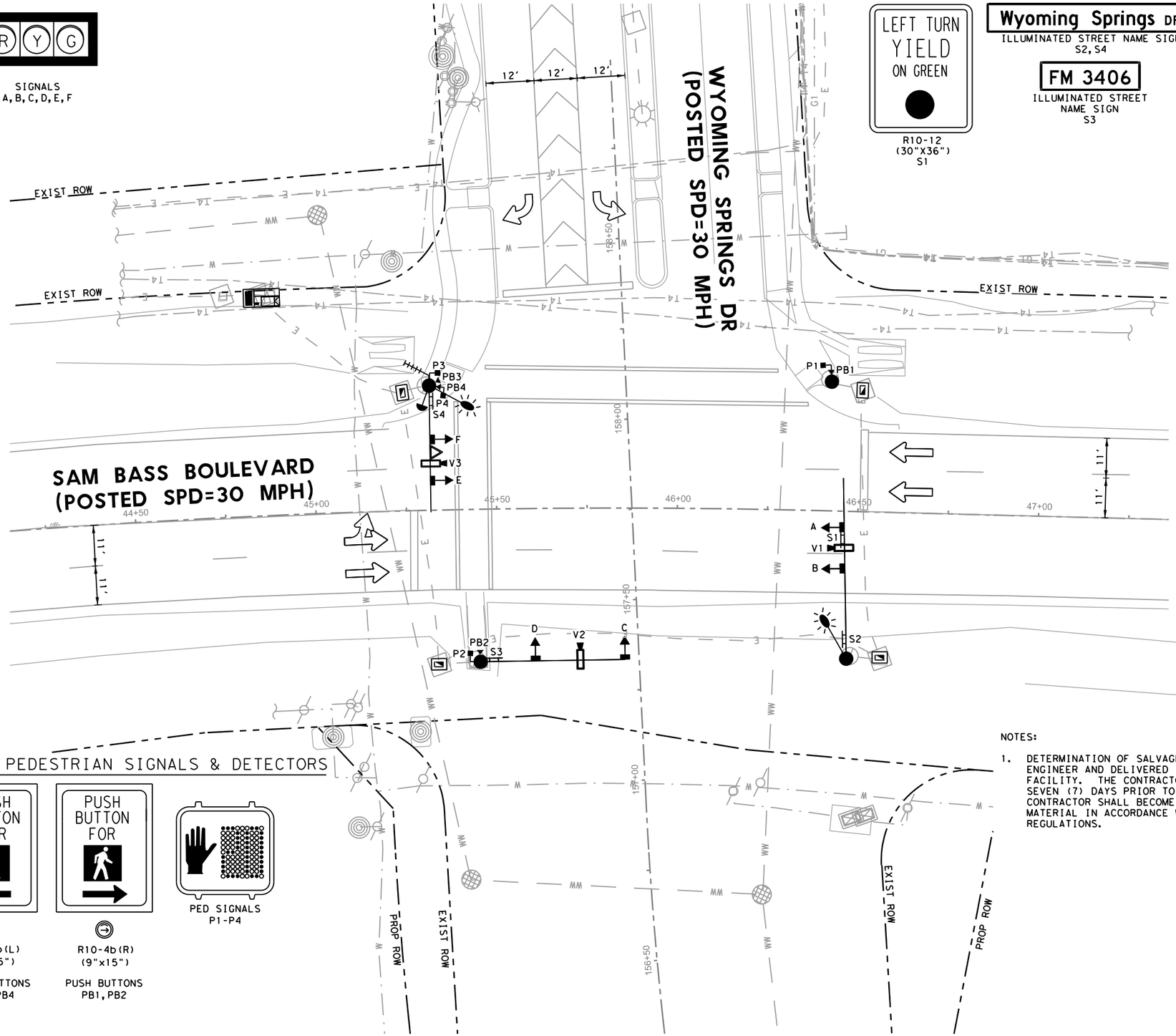

EXISTING LEGEND

EA, EB, etc.	EXIST SIGNAL HEAD NUMBER
S#	SIGN NUMBER
V#	VIVDS CAMERA NUMBER
RPDD#	RADAR PRESENCE/ADVANCED DETECTOR NUMBER
PB#	PEDESTRIAN PUSH BUTTON NUMBER
P#	PEDESTRIAN SIGNAL HEAD NUMBER
	TRAFFIC CONTROLLER
	SIGNAL HEAD
	SIGNAL POLE AND MAST ARM
	PEDESTRIAN SIGNAL HEAD W/ PUSH BUTTON
	LUMINAIRE
	GROUND BOX
	ELECRICAL SERVICE METER
	SIGN
	RADAR ADVANCE DETECTOR
	RADAR PRESENCE DETECTOR
	SINGLE PREEMPTION
	PTZ CAMERA
	NETWORK ANTENNA

EXISTING PEDESTRIAN SIGNALS & DETECTORS

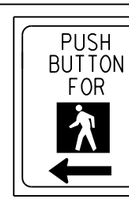

R10-4b(L)
(9"x15")

PUSH BUTTONS
PB3, PB4

R10-4b(R)
(9"x15")

PUSH BUTTONS
PB1, PB2

PED SIGNALS
P1-P4

NOTES:

1. DETERMINATION OF SALVAGE MATERIAL SHALL BE FINALIZED BY CITY ENGINEER AND DELIVERED TO CITY OF ROUND ROCK TRAFFIC OPERATIONS FACILITY. THE CONTRACTOR SHALL CONTACT THE CITY ENGINEER SEVEN (7) DAYS PRIOR TO DELIVERY OF SALVAGED MATERIAL. THE CONTRACTOR SHALL BECOME THE OWNER AND DISPOSE OF UNSALVAGED MATERIAL IN ACCORDANCE WITH FEDERAL, STATE AND LOCAL REGULATIONS.

0 15 30
SCALE: 1"=30'

WYOMING SPRINGS
SEGMENT 1
ROUND ROCK, TX

ROUND ROCK TEXAS

BGE Inc.
7330 San Pedro, Suite 202, San Antonio, TX 78216
Tel: 210-581-3600 • www.bgeinc.com
TBPE Registration No. F-1046

Revision No.	Date	Description

4/5/2023

STATE OF TEXAS
SHAUN E. SPIVEY
114567
LICENSED
PROFESSIONAL ENGINEER

Project No.:	
Issued:	
Drawn By:	
Checked By:	
Scale:	
Sheet Title	EXISTING SIGNAL LAYOUT WYOMING SPRINGS AT SAM BASS
Sheet Number	370

PROPOSED SIGNALS

(12" L.E.D. SIGNALS w/ BACKPLATES)

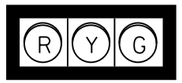

SIGNALS
H, I, K, L, O, P

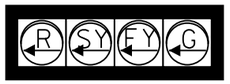

SIGNALS
G, J, N, Q



SIGNALS
M, R

PROPOSED SIGNS

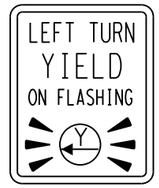

R10-17(MOD)
(36"X42")
S8-S11



ILLUMINATED STREET
NAME SIGN
S5, S7



ILLUMINATED STREET NAME SIGN
S6

PROPOSED PEDESTRIAN SIGNALS & DETECTORS



R10-3e(L)
(9"x15")

PUSH BUTTONS
PB5, PB7,
PB8

R10-3e(R)
(9"x15")

PUSH BUTTONS
PB6, PB9,
PB10

PED SIGNALS
P5-P10

PROPOSED LEGEND

(#)	RUN NUMBER
A, B, etc.	SIGNAL HEAD NUMBER
S#	SIGN NUMBER
V#	VIVDS CAMERA NUMBER
PB#	PEDESTRIAN PUSH BUTTON NUMBER
P#	PEDESTRIAN SIGNAL HEAD NUMBER
	TRAFFIC CONTROLLER W/ BACKUP BATTERY UNIT
	HORIZONTAL SIGNAL HEAD
	SIGNAL POLE AND MAST ARM
	PEDESTRIAN SIGNAL HEAD W/ PUSH BUTTON
	LUMINAIRE
	GROUND BOX W/ CONCRETE APRON
	ELECRICAL SERVICE METER
	SIGN
	VIVDS CAMERA
	SINGLE PREEMPTION
	PTZ CAMERA
	NETWORK ANTENNA
	UNDERGROUND CONDUIT (TRENCH)
	UNDERGROUND CONDUIT (BORE)
	VIVDS CAMERA ZONES
	RED-CONFIRMATION LIGHTS '(THRU AND LT PHASES)

NOTES:

1. CONTRACTOR SHALL ATTEND A PRE-CONSTRUCTION MEETING WITH THE ENGINEER PRIOR TO INITIATING ANY TRAFFIC SIGNAL RELATED WORK.
2. CONTRACTOR SHALL CONTACT THE ENGINEER AT LEAST SEVEN (7) DAYS PRIOR TO BEGINNING ANY CONSTRUCTION. THE CITY WILL PROVIDE ALL ON-SITE INSPECTION OF CONSTRUCTION.
3. CONTRACTOR SHALL UNCOVER AND LOCATE ALL MARKED UNDERGROUND FACILITIES PRIOR TO EXCAVATION FOR DRILL SHAFT AND FOUNDATIONS. UTILITIES SHOWN ARE BASED ON INFORMATION PROVIDED BY UTILITY AGENCIES AND VISUAL FIELD OBSERVATION. PROPERTY LINES SHOWN ARE APPROXIMATE.
4. CONTRACTOR SHALL PROVIDE RED-LINE MARKUPS OF CONSTRUCTION TO THE ENGINEER WITHIN SEVEN (7) WORKING DAYS OF PROJECT ACCEPTANCE.
5. CONTRACTOR SHALL INSTALL TRAFFIC SIGNAL HEADS CENTERED OVER LANES WHEN POSSIBLE (MINIMUM 8' APART) OR AS DIRECTED BY THE ENGINEER.
6. ANY SIGNS MOUNTED ON TRAFFIC SIGNAL EQUIPMENT SHALL BE FURNISHED AND INSTALLED BY THE CONTRACTOR AS SHOWN ON THE PLANS.
7. ADJUST DRILL SHAFT FOUNDATIONS AS NEEDED TO MEET VERTICAL AND/OR HORIZONTAL CLEARANCE.
8. LUMINAIRES SHOWN AT ANGLE FOR CLARITY. ACTUAL LOCATION OF LUMINAIRES TO BE OVER MAST ARMS.
9. SEE ELEVATION SHEETS FOR SPECIALIZED EQUIPMENT TO BE USED.
10. PROPOSED SIDEWALK SHALL BE EXTENDED UP TO SIGNAL POLES AS NEEDED TO PROVIDE ACCESS TO PEDESTRIAN PUSH BUTTONS.

0 15 30
SCALE: 1"=30'

WYOMING SPRINGS
SEGMENT 1
ROUND ROCK, TX

ROUND ROCK TEXAS

BGE, Inc.
7330 San Pedro, Suite 202, San Antonio, TX 78216
Tel: 210-581-3600 • www.bgeinc.com
TBPE Registration No. F-1046

Revision No.	Date	Description

4/5/2023

STATE OF TEXAS
SHAUN E. SPIVEY
114567
LICENSED
PROFESSIONAL ENGINEER

Project No.:	
Issued:	
Drawn By:	
Checked By:	
Scale:	

Sheet Title
PROPOSED SIGNAL LAYOUT WYOMING SPRINGS AT SAM BASS

371
Sheet Number

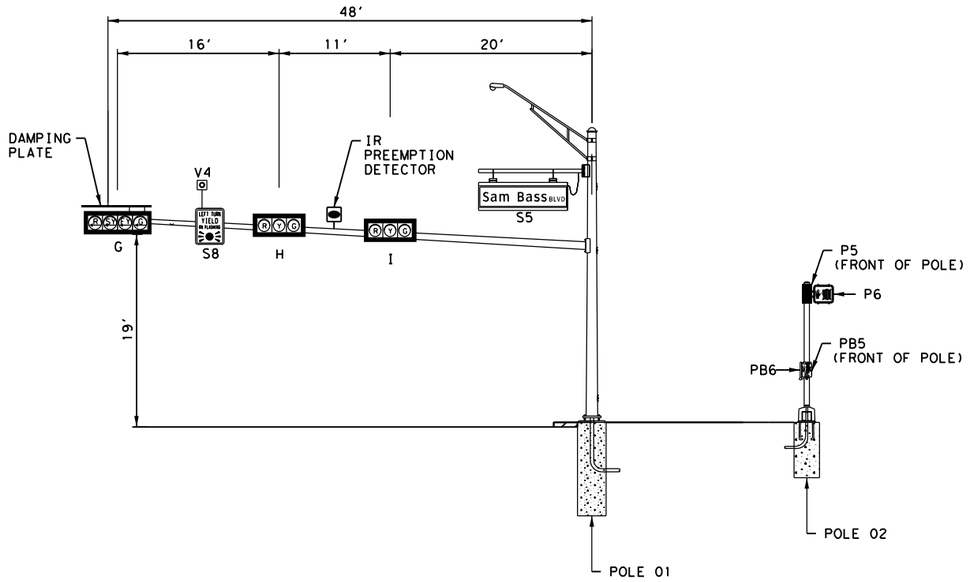

NORTHBOUND ON WYOMING SPRINGS DR

NOT TO SCALE

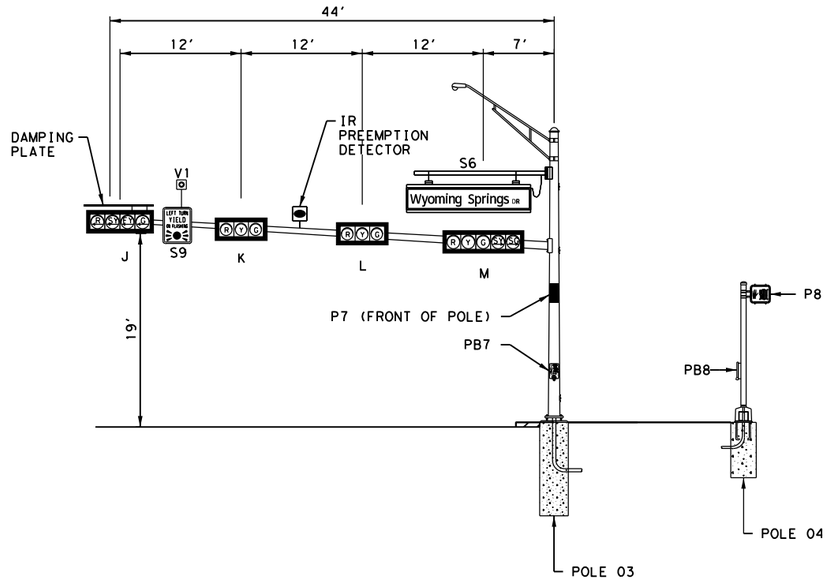

EASTBOUND ON SAM BASS BLVD

NOT TO SCALE

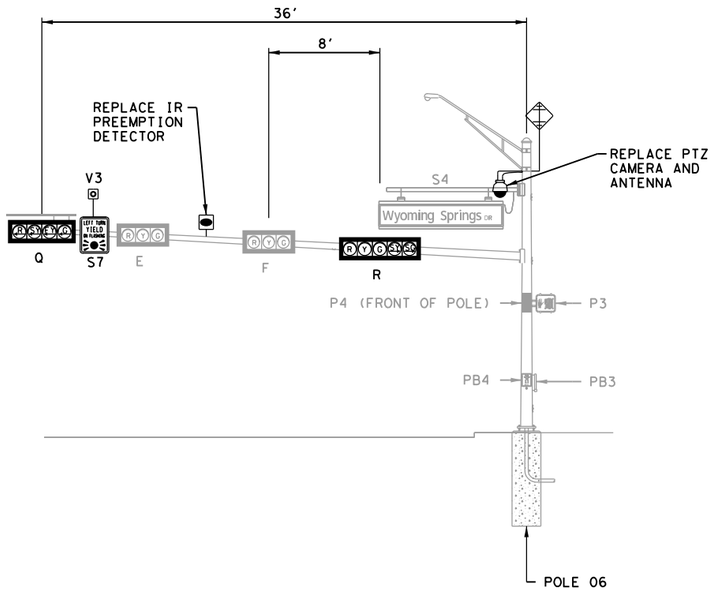

WESTBOUND ON SAM BASS BLVD

NOT TO SCALE

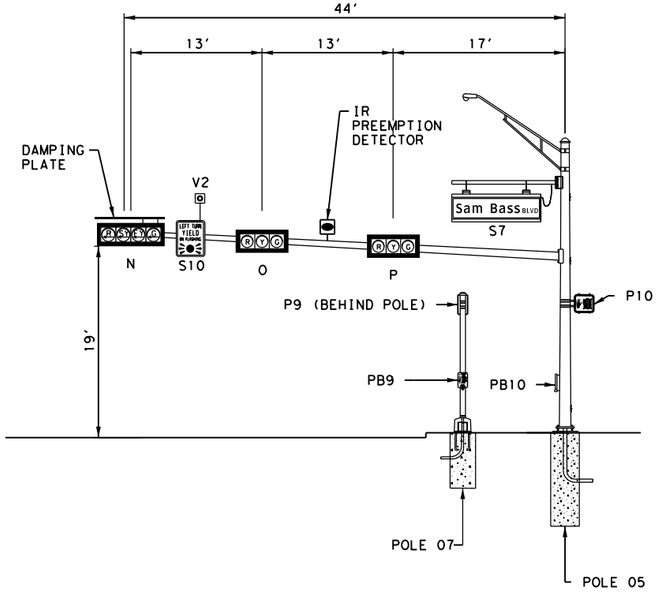

SOUTHBOUND ON WYOMING SPRINGS DR

NOT TO SCALE

NOTES:
1. VIVDS V2 AND V4 SHALL BE 'ITERIS VANTAGE VECTOR/VANTAGE NEXT HYBRID' CAMERAS AND VIVDS V1 AND V3 SHALL BE 'ITERIS NEXT' CAMERAS.
2. ADD DAMPING PLATES AT END OF PROPOSED MAST ARMS ON PROPOSED POLES 1, 3, AND 5.

WYOMING SPRINGS
SEGMENT 1
ROUND ROCK, TX

ROUND ROCK TEXAS

BGE Inc.
7330 San Pedro, Suite 202, San Antonio, TX 78216
Tel: 210-581-3600 • www.bgeinc.com
TBPE Registration No. F-1046

Revision No.	Date	Description

4/5/2023

STATE OF TEXAS
SHAUN E. SPIVEY
114567
LICENSED PROFESSIONAL ENGINEER

Project No.:	
Issued:	
Drawn By:	
Checked By:	
Scale:	

Sheet Title
PROPOSED SIGNAL LAYOUT WYOMING SPRINGS AT SAM BASS

372

Sheet Number

SUMMARY OF CONDUITS AND CABLES - WYOMING SPRINGS AT SAM BASS RD													
	CONDUIT SCH 80				LENGTH	NUMBER OF CABLES							
RUN	TRENCH		BORE			#8 AWG (INS)	#8 AWG (BARE)	#12 AWG 5/C (PED)	#14 AWG 7/C	#14 AWG 20/C	4/C SHLD PREEMPT	VIVDS CABLING (CAT 5)	#12 AWG 3/C
NO.	2"	3"	2"	3"									
1*					10'								
2*		3			50'	9	3	3	1	3	3	4	3
3*		3			60'		3						3
4*		3			8'					1		1	
5				3	123'	9	3	3		3	3	3	3
6		3			33'	3	1			1	1	1	1
7		3			138'	6	2	3		2	2	2	2
8		1			31'			1					
9		3			11'	3	1			1	1	1	1
10				3	105'	3	1	2		1	1	1	1
11		1			17'			2					
12		3			24'	3	1			1	1	1	1
13		1			20'			1					
TOTAL (LF)		1020'		684'		2904'	1148'	1208'	50'	976'	968'	1026'	1148'

* = EXISTING CONDUIT (TO REMAIN) RUN LOCATIONS AND LENGTH ARE ESTIMATED

MAST-ARM AND POLE SUMMARY - WYOMING SPRINGS AT SAM BASS								
POLES AND ARMS	#12 AWG	#14 AWG			4/C SHLD PREEMPT	VIVDS CABLING (CAT 5)	#8 AWG (INS)	#12 AWG 3/C
	5/C	2/C	5/C	7/C				
PROP POLE 1 (w/ PROP 48' ARM)					50'	65'	50'	
HEAD G				70'				
HEAD H			55'					
HEAD I			40'					
S5								35'
PROP POLE 2 (PED)								
P5	15'							
PB5	5'							
P6	15'							
PB6	5'							
PROP POLE 3 (w/ PROP 44' ARM)					45'	60'	50'	
HEAD J				65'				
HEAD K			55'					
HEAD L			40'					
HEAD M		30'	30'					
P7			15'					
PB7			5'					
S6								35'
PROP POLE 4 (PED)								
P8	15'							
PB8	5'							
PROP POLE 5 (w/ PROP 44' ARM)					50'	65'	50'	
HEAD N				70'				
HEAD O			60'					
HEAD P			45'					
P10			15'					
PB10			5'					
S7								35'
EXIST POLE 6 (w/ EXIST 36' ARM)						45'		
HEAD Q				55'				
HEAD R		30'	30'					
PROP POLE 7 (PED)								
P9	15'							
PB9	5'							
TOTAL (LF)	80'	60'	395'	190'	145'	235'	150'	105'

ACCESSIBLE PEDESTRIAN SIGNAL (APS) UNIT MESSAGE INFORMATION - WYOMING SPRINGS DR AT SAM BASS BLVD			
APS UNIT NO.	ACKNOWLEDGE DEFAULT "WAIT"	EXTENDED PRESS MESSAGE	WALK PHASE MESSAGE
		"WAIT TO CROSS (STREET NAME) AT (STREET NAME)"	"(STREET NAME) WALK SIGN IS ON TO CROSS, (STREET NAME)" OR TONE
P1	YES	WYOMING SPRINGS DR AT SAM BASS BLVD	WYOMING SPRINGS DR
P2	YES	SAM BASS BLVD AT WYOMING SPRINGS DR	SAM BASS BLVD
P3	YES	SAM BASS BLVD AT WYOMING SPRINGS DR	SAM BASS BLVD
P4	YES	WYOMING SPRINGS DR AT SAM BASS BLVD	WYOMING SPRINGS DR
P5	YES	SAM BASS BLVD AT WYOMING SPRINGS DR	SAM BASS BLVD
P6	YES	WYOMING SPRINGS DR AT SAM BASS BLVD	WYOMING SPRINGS DR

PHASING ORIENTATION DIAGRAM

NOT TO SCALE

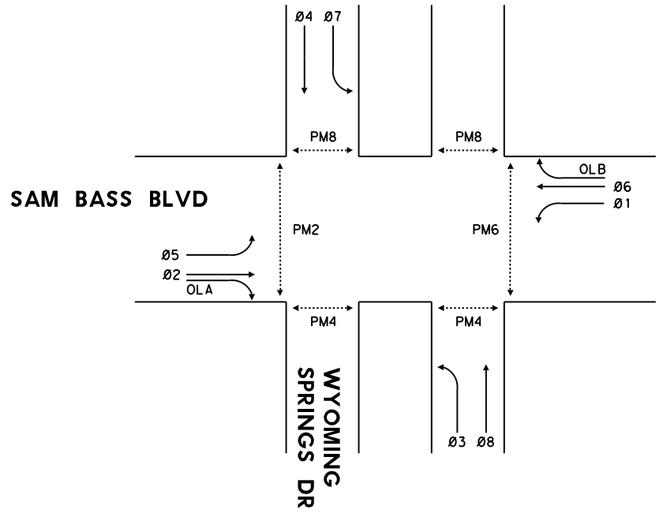

PHASING DIAGRAM

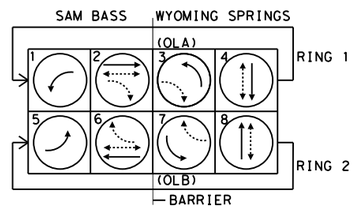

OLA = PHASE 3
OLB = PHASE 7

CABLE TERMINATION CHART - WYOMING SPRINGS AT SAM BASS RD								
CONDUCTOR COLOR	CABLE 1 FROM POLE 1 TO CONTROL	CABLE 2 FROM POLE 2 TO CONTROL	CABLE 3 FROM POLE 2 TO CONTROL	CABLE 4 FROM POLE 3 TO CONTROL	CABLE 5 FROM POLE 4 TO CONTROL	CABLE 6 FROM POLE 5 TO CONTROL	CABLE 7 FROM POLE 6 CONTROL	CABLE 8 FROM POLE 7 CONTROL
BLACK	P.B. COMMON	P.B. COMMON	P.B. COMMON	P.B. COMMON	P.B. COMMON	P.B. COMMON	P.B. COMMON	P.B. COMMON
WHITE	S. COMMON	Ø6 APS	Ø8 APS	S. COMMON	Ø2 APS	S. COMMON	S. COMMON	Ø2 APS
RED	SH H,I Ø8 R	Ø6 APS	Ø8 APS	SH K,L,M Ø2 R	Ø2 APS	SH O,P Ø4 R	SH E,F,R Ø6 R	Ø2 APS
GREEN	SH H,I Ø8 G	P5 W	P6 W	SH K,L,M Ø2 G	P8 W	SH O,P Ø4 G	SH E,F,R Ø6 G	P9 W
ORANGE	SH H,I Ø8 Y	P5 DW	P6 DW	SH K,L,M Ø2 Y	P8 DW	SH O,P Ø4 Y	SH E,F,R Ø6 Y	P9 DW
BLUE	SH G, Ø3 R	-	-	SH J, Ø5 R	-	SP N, Ø7 R	SH Q, Ø1 R	-
WHITE/BLACK	SH G, Ø3 G	-	-	SH J, Ø5 G	-	SP N, Ø7 G	SH Q, Ø1 G	-
RED/BLACK	SH G, Ø3 Y	-	-	SH J, Ø5 Y	-	SP N, Ø7 Y	SH Q, Ø1 Y	-
GREEN/BLACK	SH G, Ø3 FY	-	-	SH J, Ø5 FY	-	SP N, Ø7 FY	SH Q, Ø1 FY	-
ORANGE/BLACK	SPARE	-	-	Ø8 APS	-	Ø2 APS	Ø4 APS	-
BLUE/BLACK	SPARE	-	-	Ø8 APS	-	Ø2 APS	Ø4 APS	-
BLACK/WHITE	SPARE	-	-	P7 W	-	P10 W	P4 W	-
RED/WHITE	SPARE	-	-	P7 DW	-	P10 DW	P4 DW	-
GREEN/WHITE	SPARE	-	-	SH M, OLA G	-	SPARE	Ø6 APS	-
BLUE/WHITE	SPARE	-	-	SH M, OLA Y	-	SPARE	Ø6 APS	-
BLACK/RED	SPARE	-	-	SPARE	-	SPARE	P3 W	-
WHITE/RED	SPARE	-	-	SPARE	-	SPARE	P3 DW	-
ORANGE/RED	SPARE	-	-	SPARE	-	SPARE	SH R, OLB G	-
BLUE/RED	SPARE	-	-	SPARE	-	SPARE	SH R, OLB Y	-
RED/GREEN	SPARE	-	-	SPARE	-	SPARE	SPARE	-

SPLICE SIGNAL HEAD L INTO EXISTING THRU PHASE Ø6
SPLICE SIGNAL HEAD G INTO EXISTING THRU PHASE Ø2

WYOMING SPRINGS
SEGMENT 1
ROUND ROCK, TX

ROUND ROCK TEXAS

BGE, Inc.
7330 San Pedro, Suite 202, San Antonio, TX 78216
Tel: 210-581-3600 • www.bgeinc.com
TBPE Registration No. F-1046

Revision No.	Date	Description

4/5/2023

STATE OF TEXAS
SHAUN E. SPIVEY
114567
LICENSED
PROFESSIONAL ENGINEER

Project No.:	
Issued:	
Drawn By:	
Checked By:	
Scale:	

Sheet Title
PROPOSED SIGNAL ELECTRICAL SCHEDULE WYOMING SPRINGS AT SAM BASS

373

Sheet Number

COPYRIGHTS AND RESTRICTIONS

SPEC/TRG-X-X
SHEET NO.

Default
SHEET

BSA300 \\Vyoming\Drafting\PSE

4/4/2023 12:02:48 PM

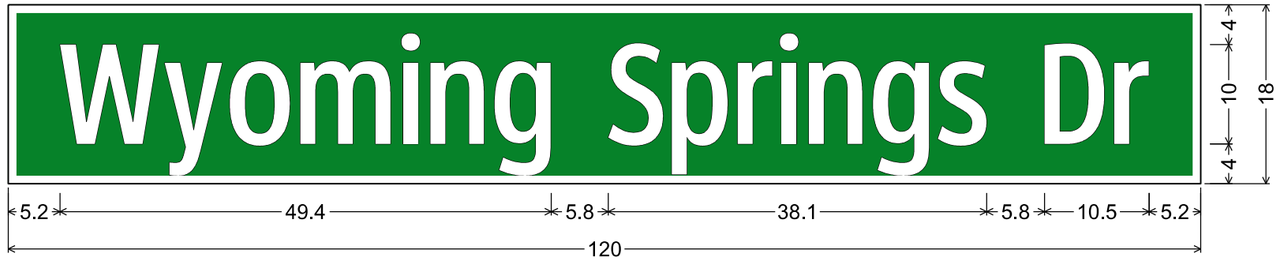

D3-1G;
1.5" Radius, 0.8" Border, White on, Green;
"Wyoming Springs Dr", ClearviewHwy-2-W 40% spacing;

WYOMING SPRINGS DR

FOR SIGN S2 ON WYOMING SPRINGS AT CREEK BEND
FOR SIGN S2 ON WYOMING SPRINGS AT SAM BASS

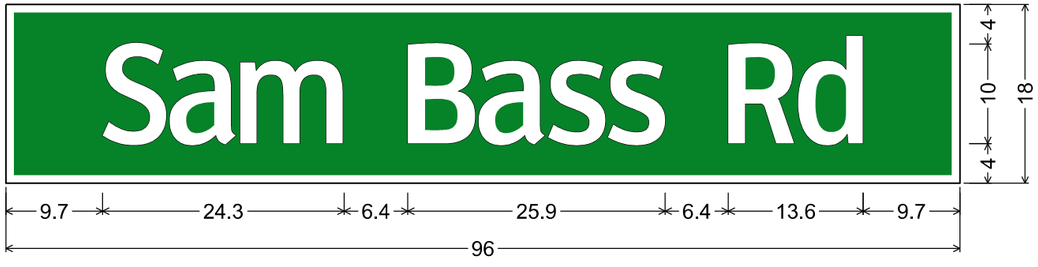

D3-1G;
1.5" Radius, 0.8" Border, White on, Green;
"Sam Bass Rd", ClearviewHwy-3-W 15% spacing;

SAM BASS BLVD

FOR SIGNS S1 AND S3 ON WYOMING SPRINGS AT SAM BASS

WYOMING SPRINGS
SEGMENT 1
ROUND ROCK, TX

ROUND ROCK TEXAS

BGE, Inc.
7330 San Pedro, Suite 202, San Antonio, TX 78216
Tel: 210-581-3600 • www.bgeinc.com
TBPE Registration No. F-1046

Revision No.	Date	Description

STATE OF TEXAS
SHAUN E. SPIVEY
114567
LICENSED
PROFESSIONAL ENGINEER
4/5/2023

Project No.:
Issued:
Drawn By:
Checked By:
Scale:
Sheet Title
PROPOSED SIGN DETAILS

374
Sheet Number

DISCLAIMER:
The use of this standard is governed by the "Texas Engineering Practice Act". No warranty of any kind is made by TxDOT for any purpose whatsoever. TxDOT assumes no responsibility for the conversion of this standard to other formats or for incorrect results or damages resulting from its use.

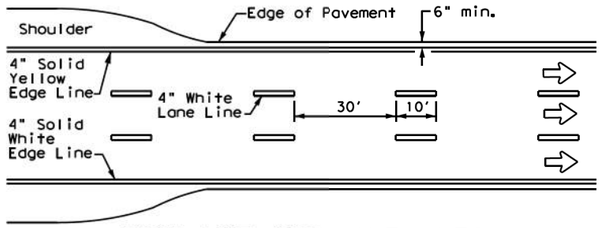

EDGE LINE AND LANE LINES ONE-WAY ROADWAY WITH OR WITHOUT SHOULDERS

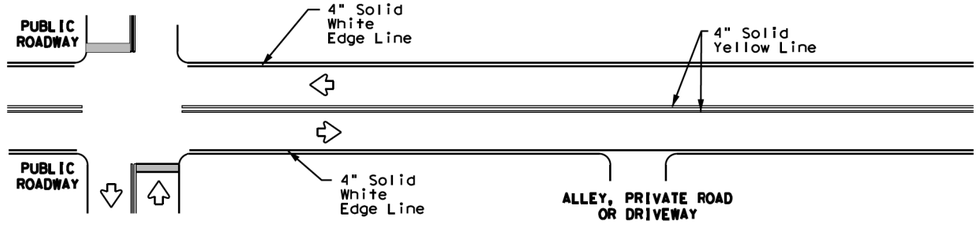

TYPICAL TWO-LANE, TWO-WAY PAVEMENT MARKINGS THROUGH INTERSECTIONS

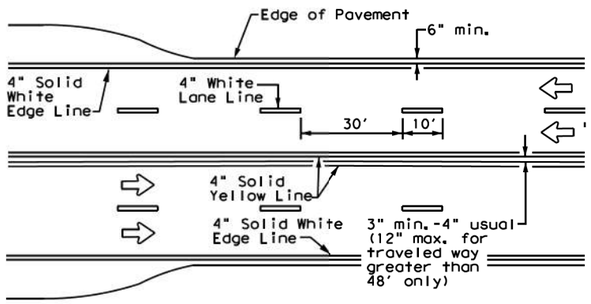

CENTERLINE AND LANE LINES FOUR LANE TWO-WAY ROADWAY WITH OR WITHOUT SHOULDERS

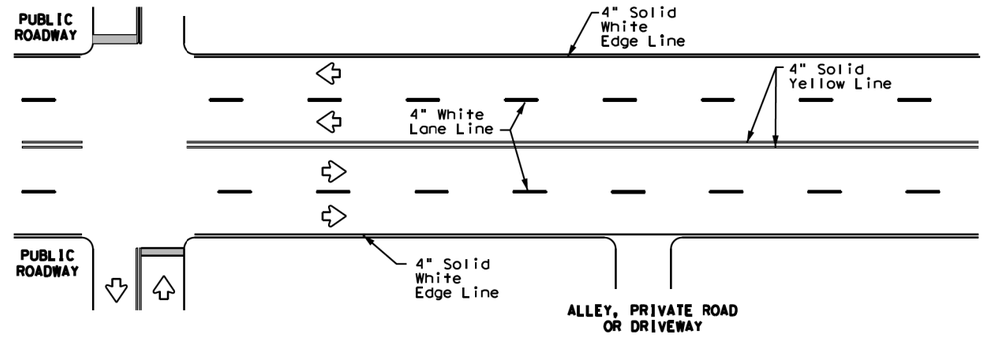

TYPICAL MULTI-LANE, TWO-WAY PAVEMENT MARKINGS THROUGH INTERSECTIONS

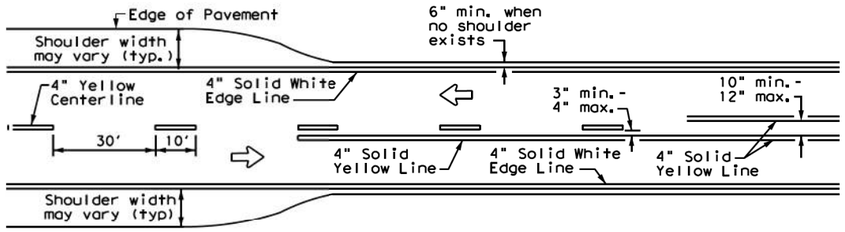

TWO LANE TWO-WAY ROADWAY WITH OR WITHOUT SHOULDERS

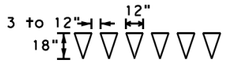

For posted speed on road being marked equal to or less than 40 MPH.

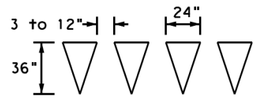

For posted speed on road being marked equal to or greater than 45 MPH.

YIELD LINES

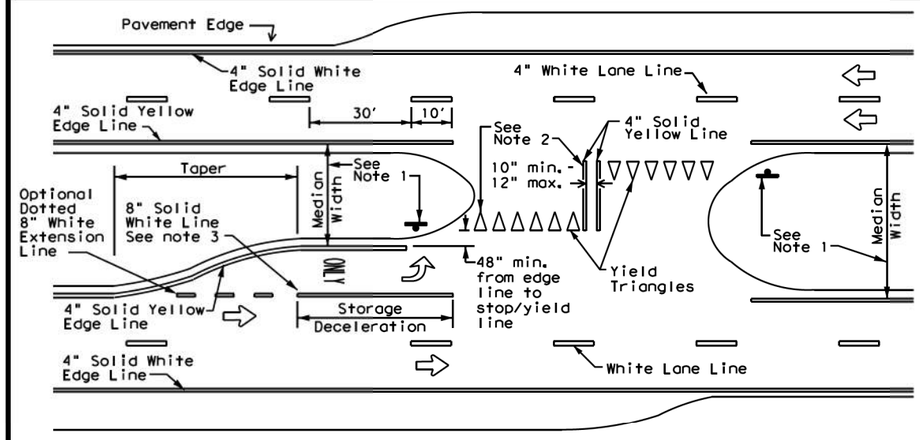

FOUR LANE DIVIDED ROADWAY CROSSOVERS

NOTES

1. Where divided highways are separated by median widths at the median opening itself of 30 feet or more, median openings shall be signed as two separate intersections. Each median opening has two width measurements, with one measurement for each approach. The narrow median width will be the controlling width to determine if signs are required. Yield signs are the typical intersection control. Stop signs are optional as determined by the Engineer.

2. Install median striping (double yellow centerlines and stop bars/yield triangles) when a 50' or greater median centerline can be placed. Stop bars shall only be used with stop signs. Yield traingles shall only be used with yield signs.

3. Length of turn bays, including taper, deceleration, and storage lengths shall be as shown on the plans or as directed by the Engineer.

GENERAL NOTES

1. Edgeline striping shall be as shown in the plans or as directed by the Engineer. The edgeline should not be placed less less than 6 inches from the edge of pavement. This distance may vary due to pavement raveling or other conditions. Edgelines are not required in curb and gutter sections of roadways.

2. The traveled way includes only that portion of the roadway used for vehicular travel. It does not include the parking lanes, sidewalks, berms and shoulders. The traveled ways shall be measured from the inside of edgeline to the inside of edgeline of a two lane roadway.

MATERIAL SPECIFICATIONS	
PAVEMENT MARKERS (REFLECTORIZED)	DMS-4200
EPOXY AND ADHESIVES	DMS-6100
BITUMINOUS ADHESIVE FOR PAVEMENT MARKERS	DMS-6130
TRAFFIC PAINT	DMS-8200
HOT APPLIED THERMOPLASTIC	DMS-8220
PERMANENT PREFABRICATED PAVEMENT MARKINGS	DMS-8240

All pavement marking materials shall meet the required Departmental Material Specifications as specified by the plans.

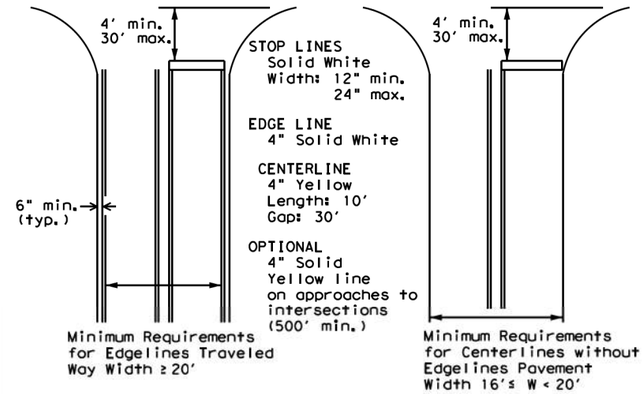

GUIDE FOR PLACEMENT OF STOP LINES, EDGE LINE & CENTERLINE

Based on Traveled Way and Pavement Widths for Undivided Highways

Texas Department of Transportation

Traffic Safety Division Standard

TYPICAL STANDARD PAVEMENT MARKINGS

PM(1)-20

FILE: pm1-20.dgn	DN:	CK:	DW:	CK:
© TxDOT November 1978	CONT	SECT	JOB	HIGHWAY
REVISIONS				
8-95 3-03	DIST	COUNTY		SHEET NO.
5-00 2-12				375
8-00 6-20				

22A

DATE:
FILE:

REFLECTIVE RAISED PAVEMENT MARKERS FOR VEHICLE POSITIONING GUIDANCE

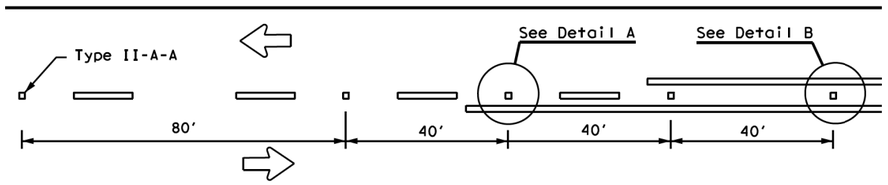

CENTERLINE FOR ALL TWO LANE ROADWAYS

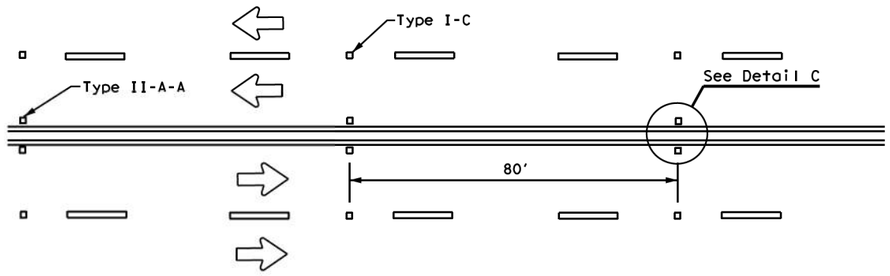

CENTERLINE & LANE LINES FOR FOUR LANE TWO-WAY HIGHWAYS

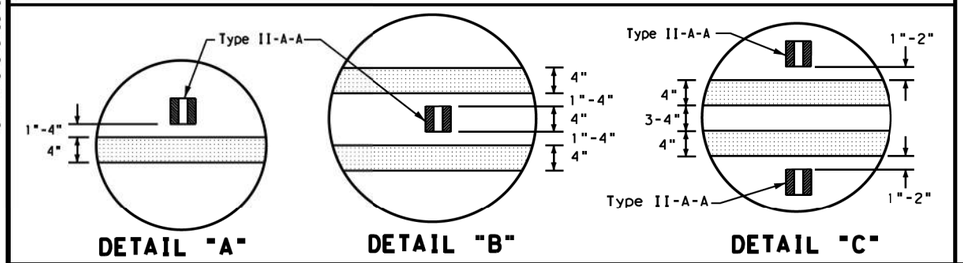

DETAIL "A" **DETAIL "B"** **DETAIL "C"**

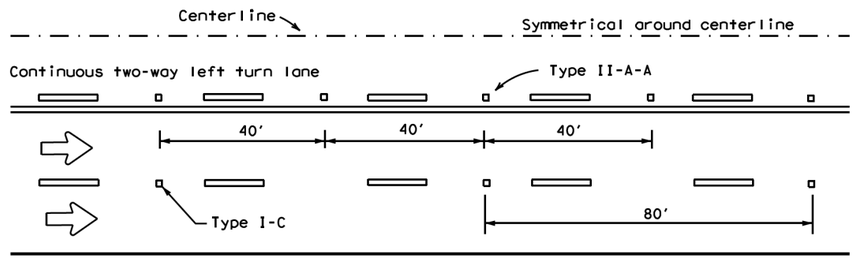

CENTERLINE AND LANE LINES FOR TWO-WAY LEFT TURN LANE

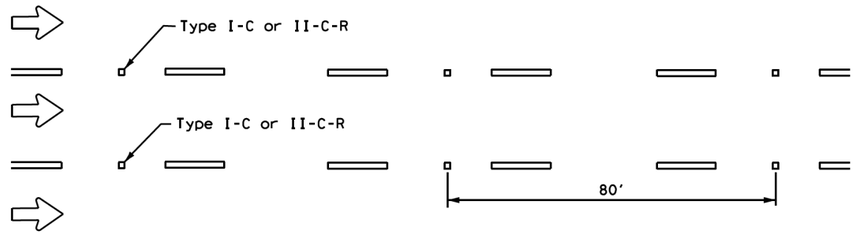

LANE LINES FOR ONE-WAY ROADWAY (NON-FREEWAY FACILITIES)

Raised pavement markers Type II-C-R shall have clear face toward normal traffic and red face toward wrong-way traffic.

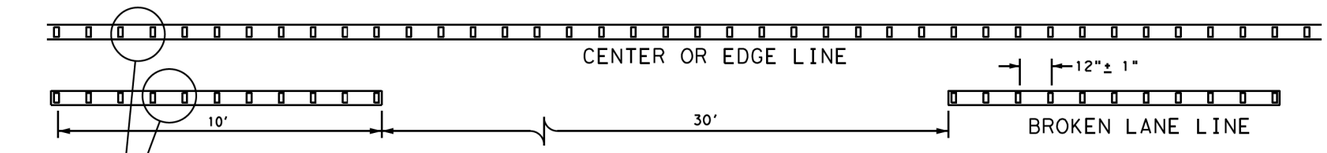

REFLECTORIZED PROFILE PATTERN DETAIL

USING REFLECTIVE PROFILE PAVEMENT MARKINGS

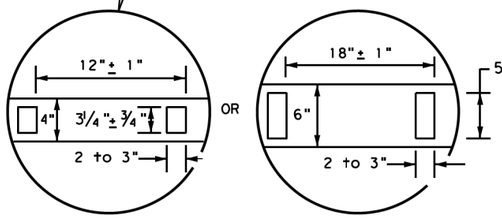

4" EDGE LINE, CENTER LINE OR LANE LINE

OPTIONAL 6" EDGE LINE, CENTER LINE OR LANE LINE

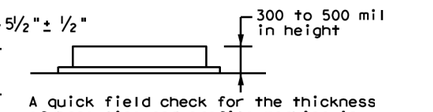

A quick field check for the thickness of base line and profile marking is approximately equal to a stack of 5 quarters to a maximum height of 7 quarters.

NOTE

Profile markings shall not be placed on roadways with a posted speed limit of 45 MPH or less.

GENERAL NOTES

1. All raised pavement markers placed in broken lines shall be placed in line with and midway between the stripes.
2. On concrete pavements the raised pavement markers should be placed to one side of the longitudinal joints.

MATERIAL SPECIFICATIONS	
PAVEMENT MARKERS (REFLECTORIZED)	DMS-4200
EPOXY AND ADHESIVES	DMS-6100
BITUMINOUS ADHESIVE FOR PAVEMENT MARKERS	DMS-6130
TRAFFIC PAINT	DMS-8200
HOT APPLIED THERMOPLASTIC	DMS-8220
PERMANENT PREFABRICATED PAVEMENT MARKINGS	DMS-8240

All pavement marking materials shall meet the required Departmental Material Specifications as specified by the plans.

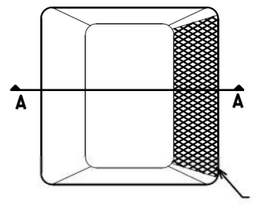

Type I (Top View)

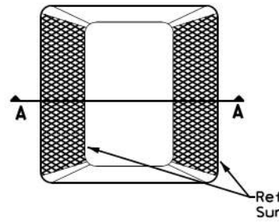

Type II (Top View)

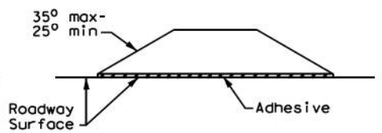

SECTION A

RAISED PAVEMENT MARKERS

Texas Department of Transportation

Traffic Safety Division Standard

POSITION GUIDANCE USING RAISED MARKERS RELECTORIZED PROFILE MARKINGS PM(2)-20

FILE: pm2-20.dgn	DN:	CK:	DW:	CK:
©TxDOT April 1977	CONT	SECT	JOB	HIGHWAY
REVISIONS 4-92 2-10				
5-00 2-12	DIST	COUNTY		SHEET NO.
8-00 6-20				376

22B

DISCLAIMER:
The use of this standard is governed by the "Texas Engineering Practice Act". No warranty of any kind is made by TxDOT for any purpose whatsoever. TxDOT assumes no responsibility for the conversion of this standard to other formats or for incorrect results or damages resulting from its use.

DATE:
FILE:

DISCLAIMER:
The use of this standard is governed by the "Texas Engineering Practice Act". No warranty of any kind is made by TxDOT for any purpose whatsoever. TxDOT assumes no responsibility for the conversion of this standard to other formats or for incorrect results or damages resulting from its use.

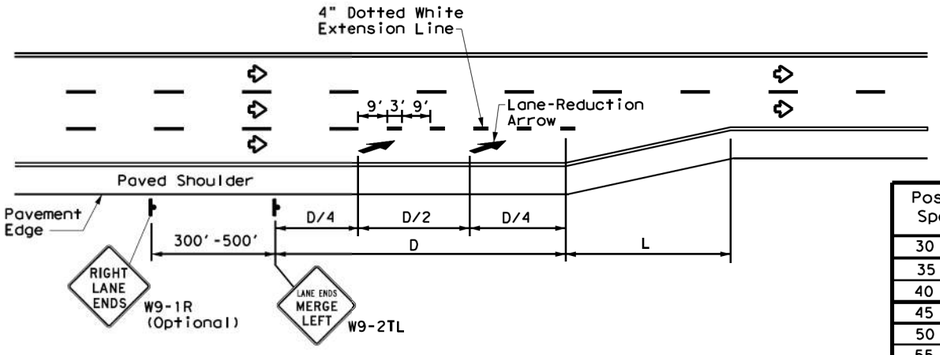

LANE REDUCTION

Posted Speed	D (ft)	L (ft)
30 MPH	460	$L=\frac{WS^2}{60}$
35 MPH	565	
40 MPH	670	
45 MPH	775	L=WS
50 MPH	885	
55 MPH	990	
60 MPH	1,100	
65 MPH	1,200	
70 MPH	1,250	
75 MPH	1,350	

NOTES

1. Lane reduction pavement markings are used where the number of through lanes is reduced because of narrowing of the roadway or because of a section of on-street parking in what would otherwise be a through lane. For Texas Super 2 Passing Lanes, see TS2(PL) standard sheets.
2. On divided highways, an additional W9-1R "RIGHT LANE ENDS" sign may be installed in the median aligned with the W9-1R sign on the right side of the highway.
3. Lane reduction arrows are required for speeds of 45 mph or greater. An optional third lane reduction arrow may be added based on engineering judgement. If used, the optional third lane reduction arrow should be centered between the first and last lane reduction arrows.
4. For lane reductions on Freeways and Expressways, signing shall conform to the TxDOT Freeway Signing Handbook.

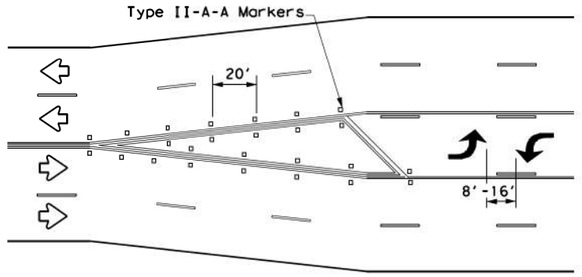

A two-way left-turn (TWLT) lane-use arrow pavement marking should be used at or just downstream from the beginning of a two-way left-turn lane within a corridor. Repeating the marking after each intersection or dedicated turn bay is not required unless stated elsewhere in the plans.

TYPICAL TRANSITION FOR TWLTL AND DIVIDED HIGHWAY

GENERAL NOTES

1. Lane use word and arrow markings shall be used where through lanes approaching an intersection become mandatory turn lanes. Lane use word and arrow markings should be used in auxiliary lanes of substantial length. Lane use arrow markings or word and arrow markings may be used in other lanes and turn bays for emphasis. Details for words and arrows are as shown in the Standard Highway Sign Designs for Texas.
2. When lane-use words and arrow markings are used, two sets of arrows should be used if the length of the bay is greater than 180 feet. When a single lane use arrow or word and arrow marking is used for a short turn lane, it should be located at or near the upstream end of the full-width turn lane.
3. Use raised pavement marker Type I-C with undivided highways, flush medians and two way left turn lanes. Use raised pavement marker Type II-C-R with divided highways and raised medians.
4. Length of turn bays, including taper, deceleration, and storage lengths shall be as shown on the plans or as directed by the Engineer.

MATERIAL SPECIFICATIONS	
PAVEMENT MARKERS (REFLECTORIZED)	DMS-4200
EPOXY AND ADHESIVES	DMS-6100
BITUMINOUS ADHESIVE FOR PAVEMENT MARKERS	DMS-6130
TRAFFIC PAINT	DMS-8200
HOT APPLIED THERMOPLASTIC	DMS-8220
PERMANENT PREFABRICATED PAVEMENT MARKINGS	DMS-8240

All pavement marking materials shall meet the required Departmental Material Specifications as specified by the plans.

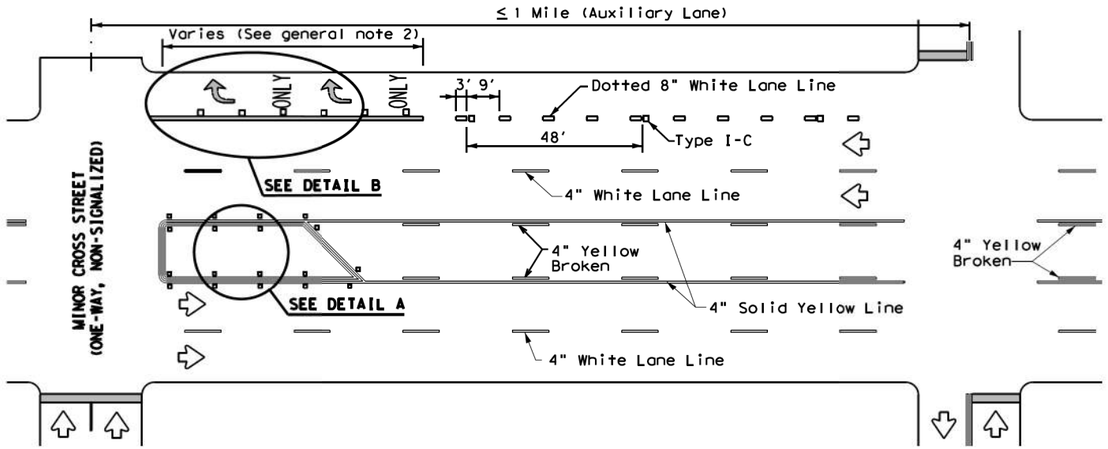

TYPICAL TWLTL AT ONE-WAY STREET AND RIGHT TURN AUXILIARY LANE

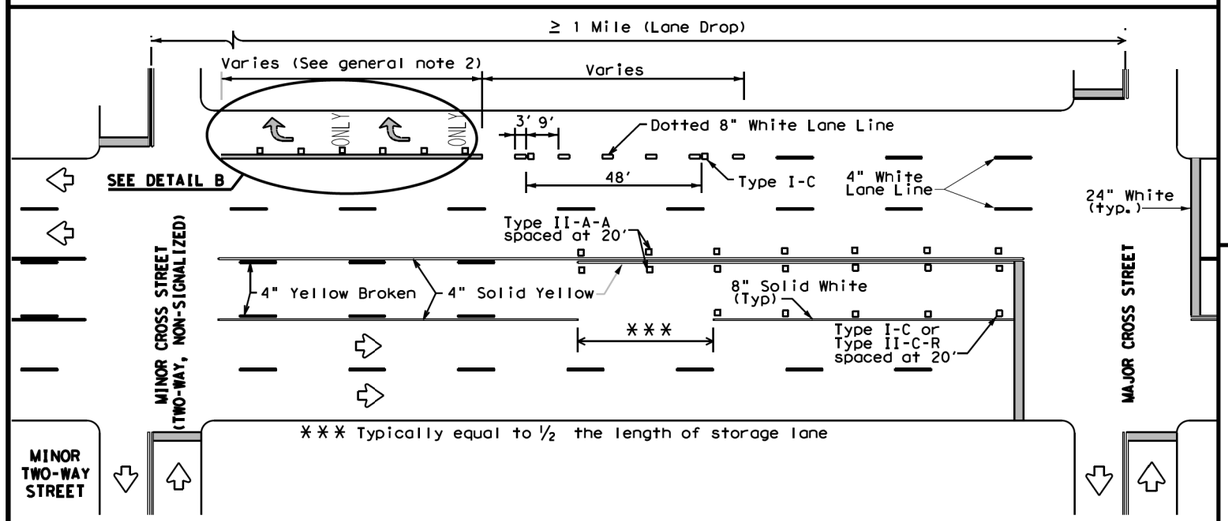

TYPICAL TWLTL AT TWO-WAY CROSS STREET AND RIGHT TURN LANE DROP

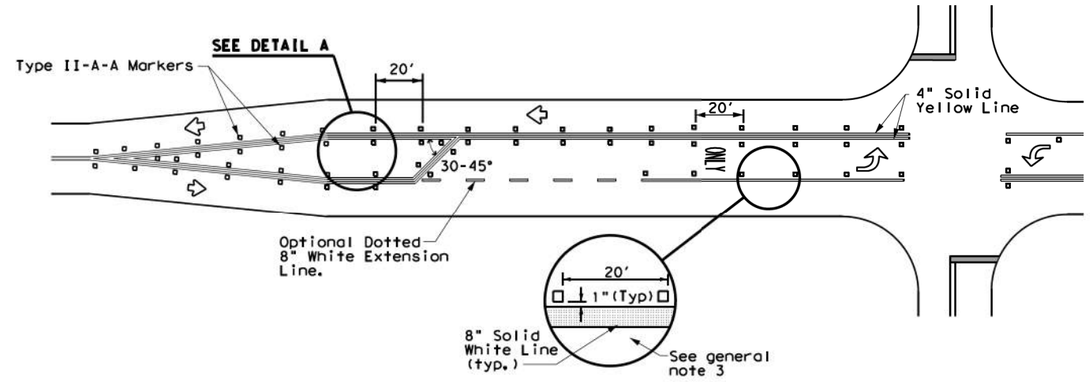

TYPICAL TWO-LANE HIGHWAY INTERSECTION WITH LEFT TURN BAYS

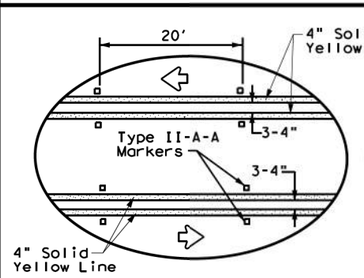

DETAIL A

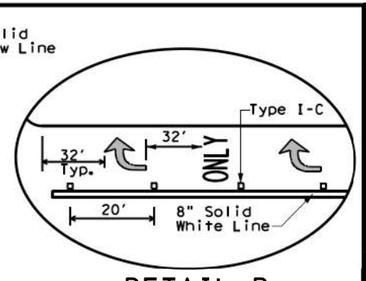

DETAIL B

Texas Department of Transportation

Traffic Safety Division Standard

TWO-WAY LEFT TURN LANES, RURAL LEFT TURN BAYS, AND LANE REDUCTION PAVEMENT MARKINGS

PM(3)-20

FILE: pm3-20.dgn	DN:	CK:	DW:	CK:
©TxDOT April 1998	CONT	SECT	JOB	HIGHWAY
REVISIONS 5-00 2-10 8-00 2-12 3-03 6-20	DIST	COUNTY		SHEET NO. 377

22C

DATE:
FILE:

DISCLAIMER: The use of this standard is governed by the "Texas Engineering Practice Act". No warranty of any kind is made by TxDOT for any purpose whatsoever. TxDOT assumes no responsibility for the conversion of this standard to other formats or for incorrect results or damages resulting from its use.

SIGN SUPPORT DESCRIPTIVE CODES

(Descriptive Codes correspond to project estimate and quantities sheets)

SM RD SGN ASSM TY XXXXX(X)XX(X-XXXX)

Post Type

FRP = Fiberglass Reinforced Plastic Pipe (see SMD(FRP))
TWT = Thin-Walled Tubing (see SMD(TWT))
10BWG = 10 BWG Tubing (see SMD(SLIP-1) to (SLIP-3))
S80 = Schedule 80 Pipe (see SMD(SLIP-1) to (SLIP-3))

Number of Posts (1 or 2)

Anchor Type

UA = Universal Anchor - Concreted (see SMD(FRP) and (TWT))
UB = Universal Anchor - Bolted down (see SMD(FRP) and (TWT))
WS = Wedge Anchor Steel - (see SMD(TWT))
WP = Wedge Anchor Plastic (see SMD(TWT))
SA = Slipbase - Concreted (see SMD(SLIP-1) to (SLIP-3))
SB = Slipbase - Bolted Down (see SMD(SLIP-1) to (SLIP-3))

Sign Mounting Designation

P = Prefab. "Plain" (see SMD(SLIP-1) to (SLIP-3), (TWT), (FRP))
T = Prefab. "T" (see SMD(SLIP-1) to (SLIP-3), (TWT))
U = Prefab. "U" (see SMD(SLIP-1) to (SLIP-3))
IF REQUIRED
1EXT or 2EXT = Number of Extensions (see SMD(SLIP-1) to (SLIP-3), (TWT))
BM = Extruded Wind Beam (see SMD(SLIP-1) to (SLIP-3))
WC = 1.12 #/ft Wing Channel (see SMD(SLIP-1) to (SLIP-3))
EXAL = Extruded Aluminum Sign Panels (see SMD(SLIP-3))

REQUIRED CLEARANCE FOR BREAKAWAY SUPPORT

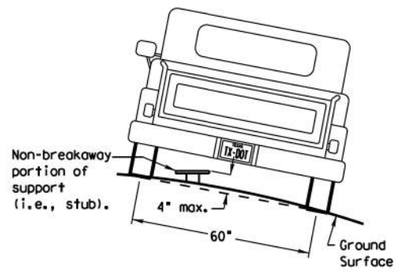

To avoid vehicle undercorriage snagging, any substantial remains of a breakaway support, when it is broken away, should not project more than 4 inches above a 60-inch chord (i.e., typical space between wheel paths).

SIGN LOCATION

PAVED SHOULDERS

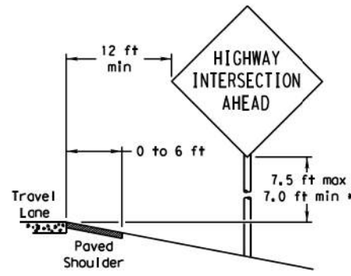

LESS THAN 6 FT. WIDE

When the shoulder is 6 ft. or less in width, the sign must be placed at least 12 ft. from the edge of the travel lane.

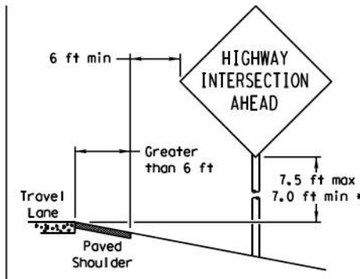

GREATER THAN 6 FT. WIDE

When the shoulder is greater than 6 ft in width, the sign must be placed at least 6 ft. from the edge of the shoulder.

T-INTERSECTION

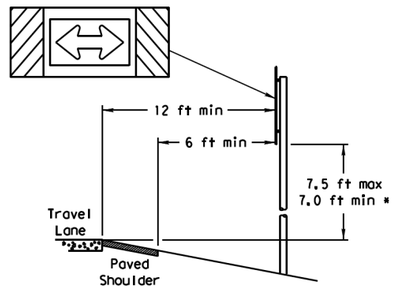

When this sign is needed at the end of a two-lane, two way roadway, the right edge of the sign should be in line with the centerline of the roadway. Place as close to ROW as practical.

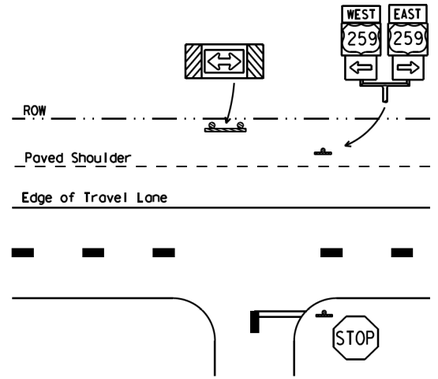

BEHIND BARRIER

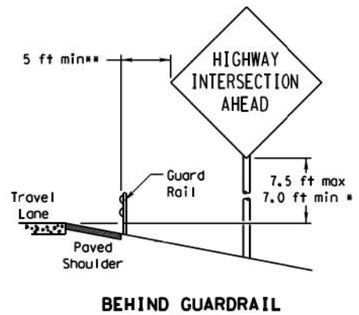

BEHIND GUARDRAIL

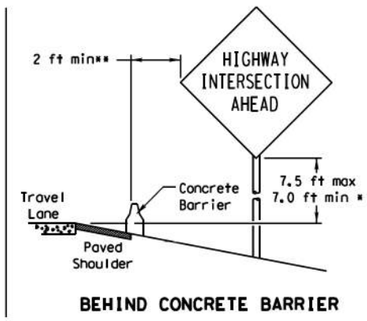

BEHIND CONCRETE BARRIER

**Sign clearance based on distance required for proper guard rail or concrete barrier performance.

No more than 2 sign posts should be located within a 7 ft. circle.

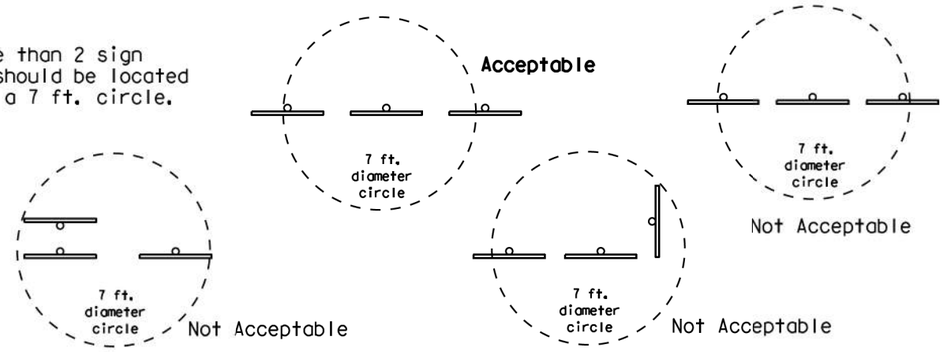

TYPICAL SIGN ATTACHMENT DETAIL

Single Signs

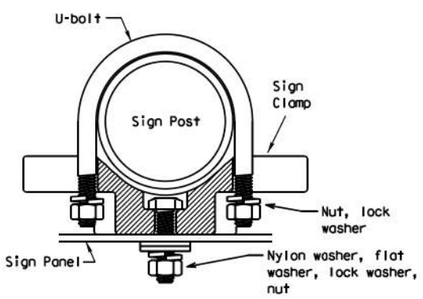

Bolts used to mount sign panels to the clamp are 5/16-18 UNC galvanized square head with nut, nylon washer, flat washer and lock washer. The bolt length is 1 inch for aluminum.

When two sign clamps are used to mount signs back-to-back, use a 5/16-18 UNC galvanized hex head per ASTM A307 with nut and helical-spring lock washer. The approximate bolt lengths for various post sizes and sign clamp types are given in the table at right. The bolt length may need to be adjusted depending upon field conditions.

Sign clamps may be either the specific size clamp or the universal clamp.

Back-to-Back Signs

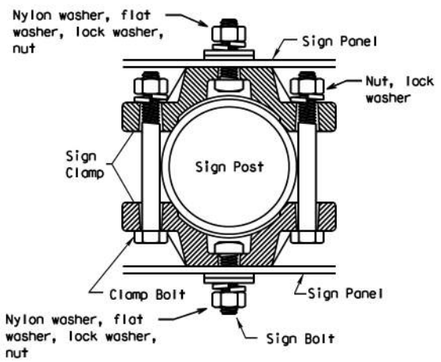

Pipe Diameter	Approximate Bolt Length	
	Specific Clamp	Universal Clamp
2" nominal	3"	3 or 3 1/2"
2 1/2" nominal	3 or 3 1/2"	3 1/2 or 4"
3" nominal	3 1/2 or 4"	4 1/2"

SIGNS WITH PLAQUES

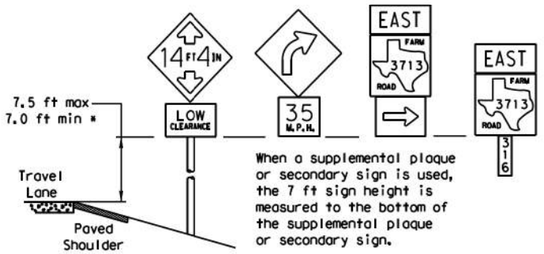

When a supplemental plaque or secondary sign is used, the 7 ft sign height is measured to the bottom of the supplemental plaque or secondary sign.

CURB & GUTTER OR RAISED ISLAND

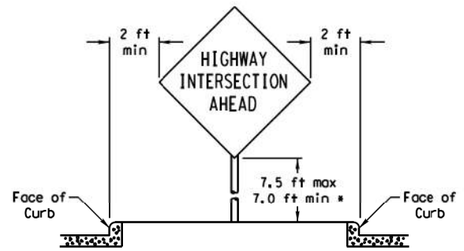

RESTRICTED RIGHT-OF-WAY

(When 6 ft min. is not possible.)

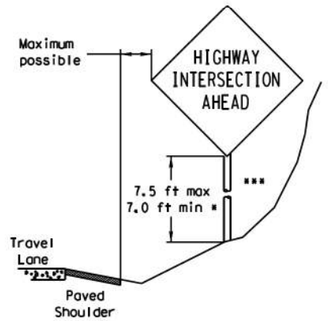

Right-of-way restrictions may be created by rocks, water, vegetation, forest, buildings, a narrow island, or other factors.

In situations where a lateral restriction prevents the minimum horizontal clearance from the edge of the travel lane, signs should be placed as far from the travel lane as practical.

*** Post may be shorter if protected by guardrail or if Engineer determines the post could not be hit due to extreme slope.

* Signs shall be mounted using the following condition that results in the greatest sign elevation:

(1) a minimum of 7 to a maximum of 7.5 feet above the edge of the travel lane or

(2) a minimum of 7 to a maximum of 7.5 feet above the grade at the base of the support when sign is installed on the backslope.

The maximum values may be increased when directed by the Engineer.

See the Traffic Operations Division website for detailed drawings of sign clamps, Triangular Slipbase System components and Wedge Anchor System components.

The website address is:
http://www.txdot.gov/publications/traffic.htm

Texas Department of Transportation
Traffic Operations Division

SIGN MOUNTING DETAILS SMALL ROADSIDE SIGNS GENERAL NOTES & DETAILS

SMD(GEN)-08

©TxDOT July 2002

DN: TXDOT	CK: TXDOT	DW: TXDOT	CK: TXDOT
CONT	SECT	JOB	HIGHWAY
DIST	COUNTY		SHEET NO.
			378

9-08 REVISIONS

DATE:
FILE:

DISCLAIMER: The use of this standard is governed by the "Texas Engineering Practice Act". No warranty of any kind is made by TxDOT for any purpose whatsoever. TxDOT assumes no responsibility for the conversion of this standard to other formats or for incorrect results or damages resulting from its use.

TRIANGULAR SLIPBASE INSTALLATION GENERAL REQUIREMENTS

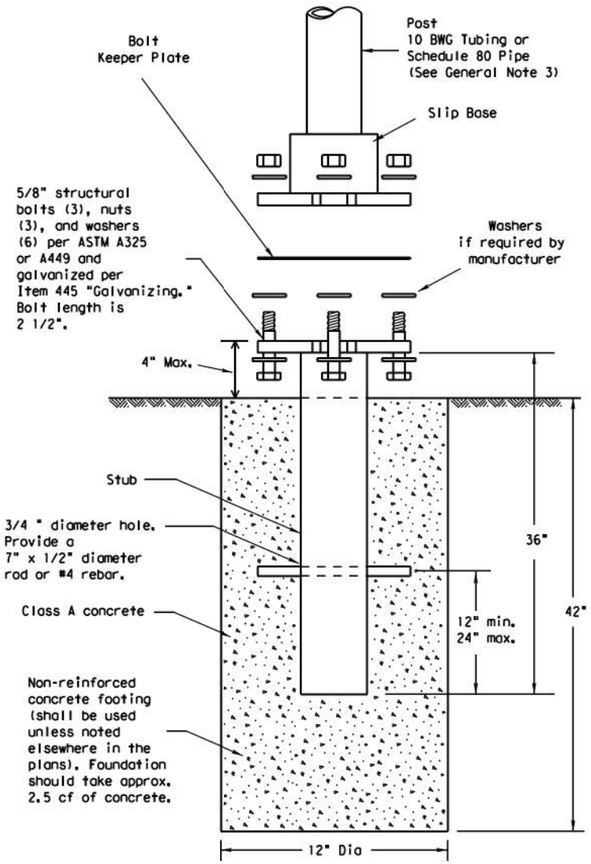

SM RD SGN ASSM TY XXXXX(X)SA(X-XXXX)

NOTE

There are various devices approved for the Triangular Slipbase System. Please reference the Material Producer List for approved slip base systems. http://www.txdot.gov/business/producer_list.htm The devices shall be installed per manufacturers' recommendations. Installation procedures shall be provided to the Engineer by Contractor.

GENERAL NOTES:

1. Slip base shall be permanently marked to indicate manufacturer. Method, design, and location of marking are subject to approval of the TxDOT Traffic Standards Engineer.
2. Material used as post with this system shall conform to the following specifications:
   10 BWG Tubing (2.875" outside diameter)
   - 0.134" nominal wall thickness
   - Seamless or electric-resistance welded steel tubing or pipe
   - Steel shall be HSLAS Gr 55 per ASTM A1011 or ASTM A1008
   - Other steels may be used if they meet the following:
     - 55,000 PSI minimum yield strength
     - 70,000 PSI minimum tensile strength
     - 20% minimum elongation in 2"
   - Wall thickness (uncoated) shall be within the range of 0.122" to 0.138"
   - Outside diameter (uncoated) shall be within the range of 2.867" to 2.883"
   - Galvanization per ASTM A123 or ASTM A653 G210. For precoated steel tubing (ASTM A653), recoat tube outside diameter weld seam by metallizing with zinc wire per ASTM B833.

   Schedule 80 Pipe (2.875" outside diameter)
   - 0.276" nominal wall thickness
   - Steel tubing per ASTM A500 Gr C
   - Other seamless or electric-resistance welded steel tubing or pipe with equivalent outside diameter and wall thickness may be used if they meet the following:
     - 46,000 PSI minimum yield strength
     - 62,000 PSI minimum tensile strength
     - 21% minimum elongation in 2"
   - Wall thickness (uncoated) shall be within the range of 0.248" to 0.304"
   - Outside diameter (uncoated) shall be within the range of 2.855" to 2.895"
   - Galvanization per ASTM A123
3. See the Traffic Operations Division website for detailed drawings of sign clamps and Texas Universal Triangular Slipbase System components. The website address is: http://www.txdot.gov/publications/traffic.htm
4. Sign supports shall not be spliced except where shown. Sign support posts shall not be spliced.

ASSEMBLY PROCEDURE

Foundation
1. Prepare 12-inch diameter by 42-inch deep hole. If solid rock is encountered, the depth of the foundation may be reduced such that it is embedded a minimum of 18 inches into the solid rock.
2. The Engineer may permit batches of concrete less than 2 cubic yards to be mixed with a portable, motor-driven concrete mixer. For small placements less than 0.5 cubic yards, hand mixing in a suitable container may be allowed by Engineer. Concrete shall be Class A.
3. Push the pipe end of the slip base stub into the center of the concrete. Rotate the stub back and forth while pushing it down into the concrete to assure good contact between the concrete and stub. Continue to work the stub into the concrete until it is between 2 to 4 inches above the ground.
4. Plumb the stub. Allow a minimum of 4 days to set, unless otherwise directed by the Engineer.
5. The triangular slipbase system is multidirectional and is designed to release when struck from any direction.

Support
1. Cut support so that the bottom of the sign will be 7 to 7.5 feet above the edge of the travelway (i.e., edge of the closest lane) when slip plate is below the edge of pavement or 7 to 7.5 feet above slip plate when the slip plate is above the edge of the travelway. The cut shall be plumb and straight.
2. Attach sign to support using connections shown. When multiple signs are installed on the same support, ensure the minimum clearance between each sign is maintained. See SMD(SLIP-2) for clearances based on sign types.

CONCRETE ANCHOR

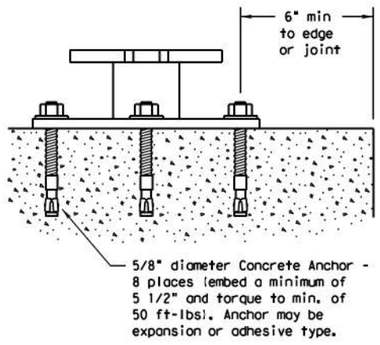

SM RD SGN ASSM TY XXXXX(X)SB(X-XXXX)

Concrete anchor consists of 5/8" diameter stud bolt with UNC series bolt threads on the upper end. Heavy hex nut per ASTM A563, and hardened washer per ASTM F436. The stud bolt shall have a minimum yield and ultimate tensile strength of 50 and 75 KSI, respectively. Nuts, bolts and washers shall be galvanized per Item 445, "Galvanizing." Adhesive type anchors shall have stud bolts installed with Type III epoxy per DMS-6100, "Epoxies and Adhesives." Adhesive anchors may be loaded after adequate epoxy cure time per the manufacturer's recommendations. Top of bolt shall extend at least flush with top of the nut when installed. The anchor, when installed in 4000 psi normal-weight concrete with a 5 1/2" minimum embedment, shall have a minimum allowable tension and shear of 3900 and 3100 psi, respectively.

Texas Department of Transportation
Traffic Operations Division

SIGN MOUNTING DETAILS
SMALL ROADSIDE SIGNS
TRIANGULAR SLIPBASE SYSTEM

SMD(SLIP-1)-08

©TxDOT July 2002

DN: TXDOT	CK: TXDOT	DW: TXDOT	CK: TXDOT

REVISIONS	CONT	SECT	JOB	HIGHWAY
9-08				
	DIST	COUNTY		SHEET NO.
				379

DATE:
FILE:

DISCLAIMER: The use of this standard is governed by the "Texas Engineering Practice Act". No warranty of any kind is made by TxDOT for any purpose whatsoever. TxDOT assumes no responsibility for the conversion of this standard to other formats or for incorrect results or damages resulting from its use.

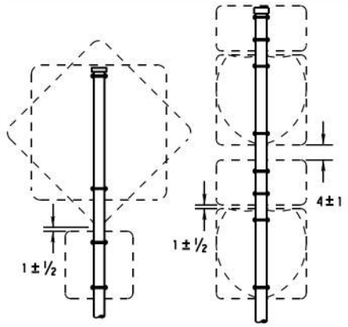

SM RD SGN ASSM TY XXXXX(1)XX(P)

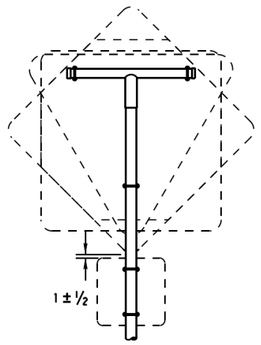

SM RD SGN ASSM TY XXXXX(1)XX(T)

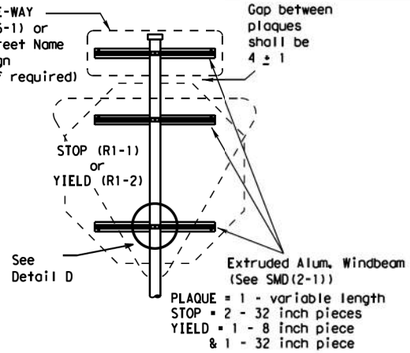

SM RD SGN ASSM TY XXXXX(1)XX(P-BM)

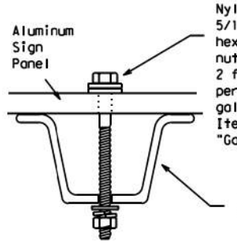

Detail A

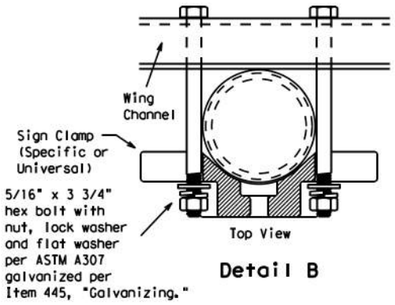

Detail B

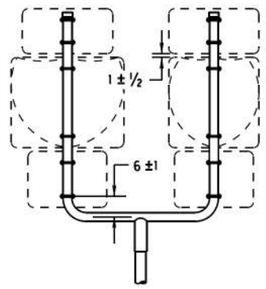

SM RD SGN ASSM TY XXXXX(1)XX(U)

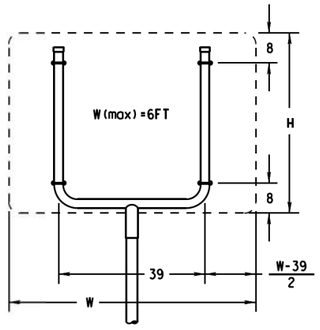

SM RD SGN ASSM TY XXXXX(1)XX(U)

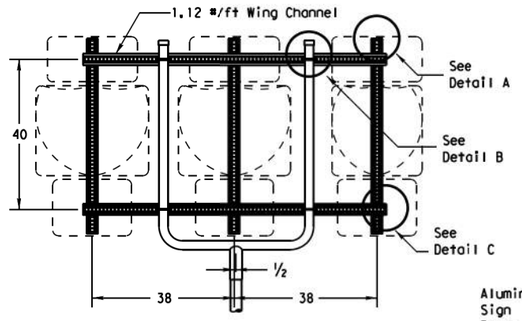

SM RD SGN ASSM TY XXXXX(1)XX(U-WC)
(See Note 11)

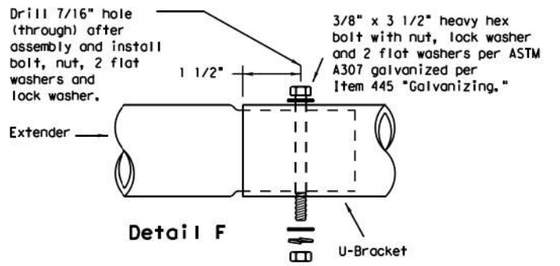

Detail F

Splices shall only be allowed behind the sign substrate.

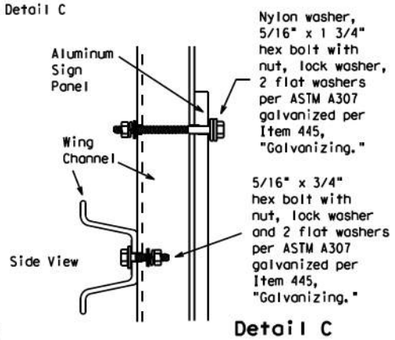

Detail C

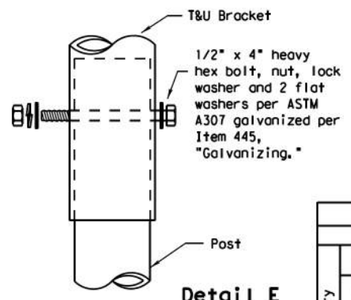

Detail E

GENERAL NOTES:

SIGN SUPPORT	# OF POSTS	MAX. SIGN AREA
10 BWG	1	16 SF
10 BWG	2	32 SF
Sch 80	1	32 SF
Sch 80	2	64 SF

1.
2. The Engineer may require that a Schedule 80 post be used in place of a 10 BWG where a sign height is abnormally high due to a fill slope.
3. Sign supports shall not be spliced except where shown. Sign support posts shall not be spliced.
4. Aluminum sign blanks shall conform to Departmental Material Specifications DMS-7110 and shall have the following minimum thicknesses: 0.080 for signs less than 7.5 sq. ft., 0.100 for signs 7.5 to 15 sq. ft., and 0.125 for signs greater than 15 sq. ft.
5. Signs that require specific supports due to reasons in addition to windloading are indicated on the "REQUIRED SUPPORT" table on this sheet.
6. For horizontal rectangular signs fabricated from flat aluminum, T-brackets are used for signs 24 inches or less in height. U-brackets are used for signs of greater height.
7. When two triangular slipbase supports are used to support a single sign, they shall not be "rigidly" connected to each other except through the sign panel. This will allow each support to act independently when impacted by an errant vehicle.
8. Wing channel shall meet ASTM A 1011 SS Gr 50 and be galvanized per ASTM A 123.
9. Excess pipe, wing channel, or windbeam shall be cut off so that it does not extend beyond the sign panel (i.e., excess support shall not be visible when the sign is viewed from the front.) Repair galvanized coating at cut support ends per Item 445, "Galvanizing."
10. Additional route markers may be added vertically, provided the total sign area does not exceed the maximum allowable amount per Note 1.
11. Additional sign clamp required on the "T-bracket" post for 24 inch height signs. Place the clamp 3 inches above bottom of sign when possible.
12. Post open ends shall be fitted with Friction Caps.
13. Sign blanks shall be the sizes and shapes shown on the plans.

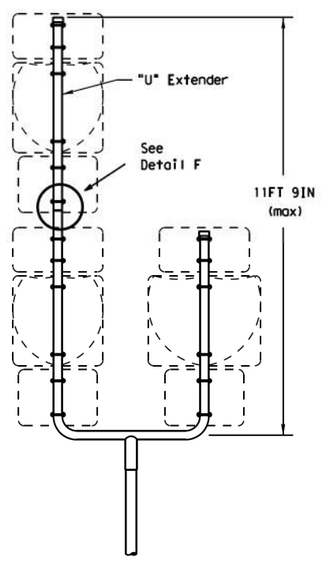

SM RD SGN ASSM TY S80(1)XX(U-1EXT)

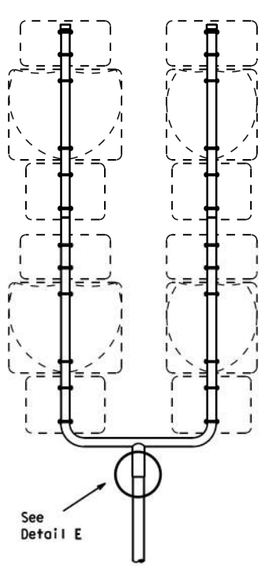

SM RD SGN ASSM TY S80(1)XX(U-2EXT)

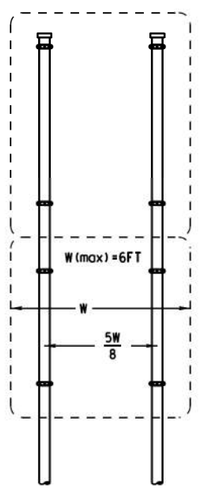

SM RD SGN ASSYM TY XXXXX(2)XX(P)

SIDE VIEW

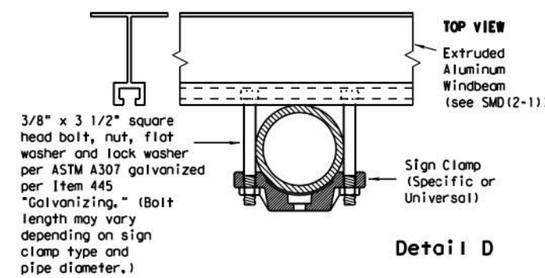

Detail D

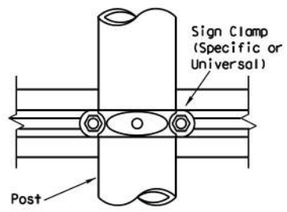

REQUIRED SUPPORT		
	SIGN DESCRIPTION	SUPPORT
Regulatory	48-inch STOP sign (R1-1)	TY 10BWG(1)XX(T) TY 10BWG(1)XX(P-BM)
	60-inch YIELD sign (R1-2)	TY 10BWG(1)XX(T) TY 10BWG(1)XX(P-BM)
	48x16-inch ONE-WAY sign (R6-1)	TY 10BWG(1)XX(T) TY 10BWG(1)XX(P-BM)
	36x48, 48x36, and 48x48-inch signs	TY 10BWG(1)XX(T)
	48x60-inch signs	TY S80(1)XX(T)
Warning	48x48-inch signs (diamond or square)	TY 10BWG(1)XX(T)
	48x60-inch signs	TY S80(1)XX(T)
	48-inch Advance School X-ing sign (S1-1)	TY 10BWG(1)XX(T)
	48-inch School X-ing sign (S2-1)	TY 10BWG(1)XX(T)
	Large Arrow sign (W1-6 & W1-7)	TY 10BWG(1)XX(T)

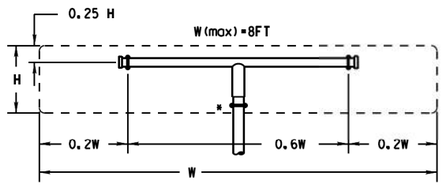

SM RD SGN ASSM TY XXXXX(1)XX(T)
(* - See Note 12)

All dimensions are in english unless detailed otherwise.

FRICTION CAP DETAIL

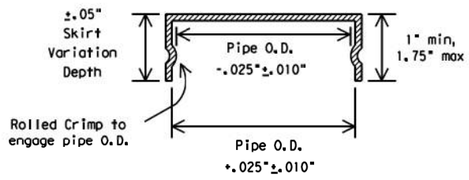

Friction caps may be manufactured from hot rolled or cold rolled steel sheets. The minimum sheet metal thickness shall be 24 gauge for all cap sizes.

The rim edges shall be reasonably straight and smooth. Caps shall be sized and formed in such a manner as to produce a drive-on friction fit and have no tendency to rock when seated on the pipe. The depth shall be sufficient to give positive protection against entrance of rainwater. They shall be free of sharp creases or indentations and show no evidence of metal fracture.

Caps shall have an electrodeposited coating of zinc in accordance with the requirements of ASTM B633 Class FE/ZN 8.

Texas Department of Transportation
Traffic Operations Division

SIGN MOUNTING DETAILS SMALL ROADSIDE SIGNS TRIANGULAR SLIPBASE SYSTEM

SMD(SLIP-2)-08

©TxDOT July 2002

DN: TXDOT	CK: TXDOT	DW: TXDOT	CK: TXDOT
CONT	SECT	JOB	HIGHWAY
DIST	COUNTY		SHEET NO.
			380

9-08 REVISIONS

DATE:
FILE:

DISCLAIMER:
The use of this standard is governed by the "Texas Engineering Practice Act". No warranty of any kind is made by TxDOT for any purpose whatsoever. TxDOT assumes no responsibility for the conversion of this standard to other formats or for incorrect results or damages resulting from its use.

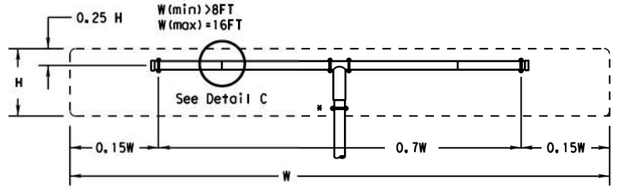

SM RD SGN ASSM TY XXXXX(1)XX(T-2EXT)
(* - See Note 12)

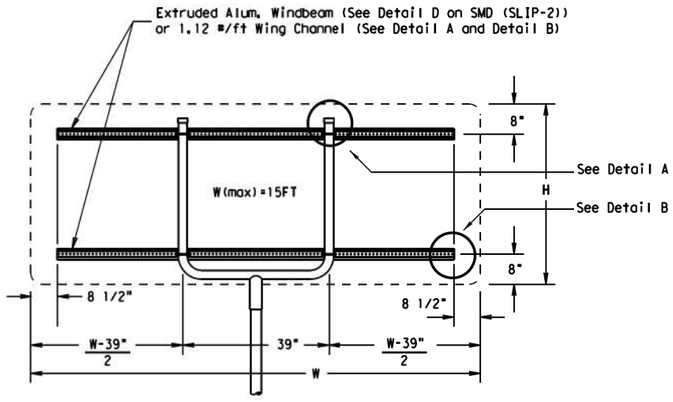

SM RD SGN ASSM TY XXXXX(1)XX(U-XX)

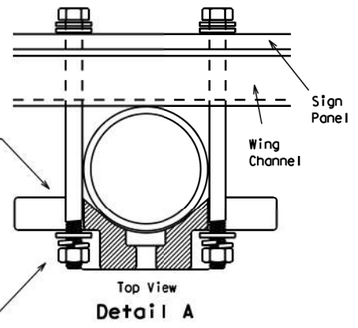

Detail A

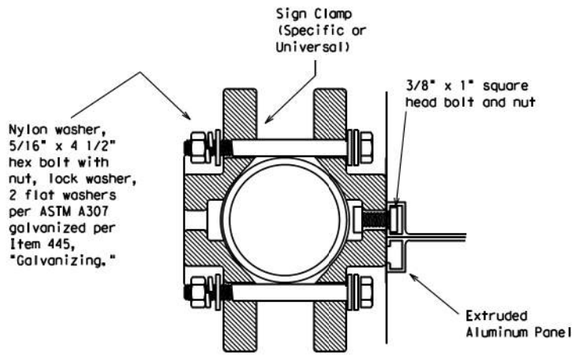

Detail D
EXTRUDED ALUMINUM SIGN WITH T BRACKET

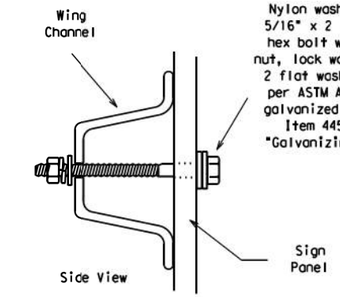

Detail B

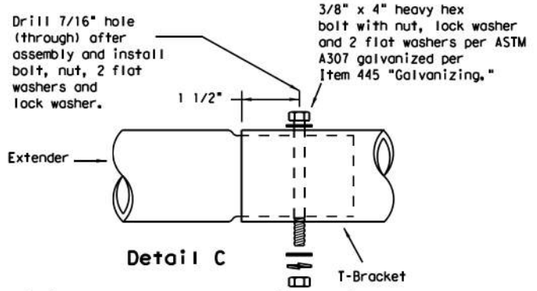

Detail C

Splices shall only be allowed behind the sign substrate.

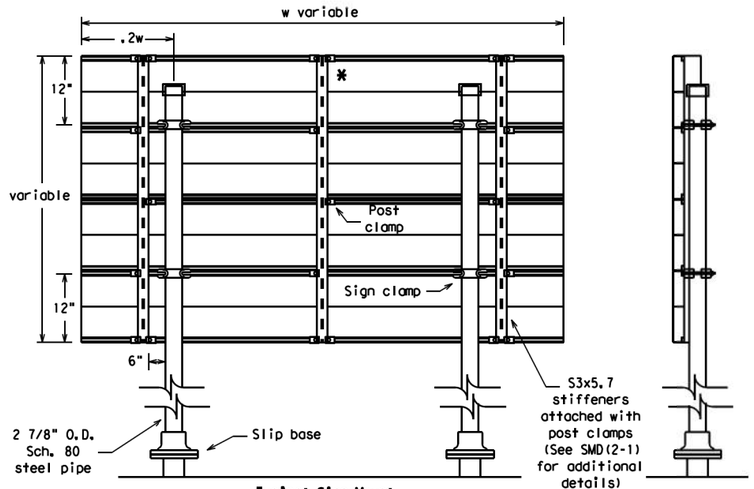

Typical Sign Mount

SM RD SGN ASSM TY S80(2)XX(P-EXAL)

* Additional stiffener placed at approximate center of signs when sign width is greater than 10'.

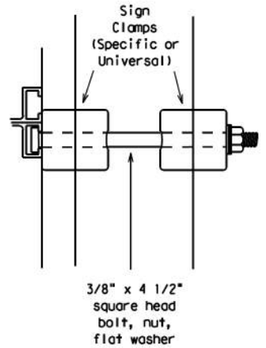

Detail E

See Detail E
for clamp installation

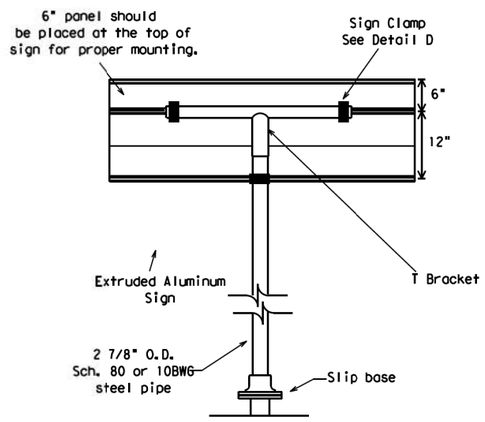

Extruded Aluminum Sign
With T Bracket

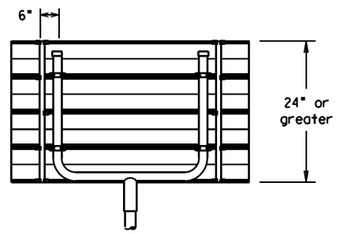

Use Extruded Alum. Windbeam as stiffeners
See SMD (2-1) for additional details

See Detail E
for clamp installation

GENERAL NOTES:

SIGN SUPPORT	# OF POSTS	MAX. SIGN AREA
10 BWG	1	16 SF
10 BWG	2	32 SF
Sch 80	1	32 SF
Sch 80	2	64 SF

1. See table above.
2. The Engineer may require that a Schedule 80 post be used in place of a 10 BWG where a sign height is abnormally high due to a fill slope.
3. Sign supports shall not be spliced except where shown. Sign support posts shall not be spliced.
4. Aluminum sign blanks shall conform to Departmental Material Specifications DMS-7110 and shall have the following minimum thicknesses: 0.080 for signs less than 7.5 sq. ft., 0.100 for signs 7.5 to 15 sq. ft., and 0.125 for signs greater than 15 sq. ft.
5. Signs that require specific supports due to reasons in addition to windloading are indicated on the "REQUIRED SUPPORT" table on this sheet.
6. For horizontal rectangular signs fabricated from flat aluminum, T-brackets are used for signs 24 inches or less in height. U-brackets are used for signs of greater height.
7. When two triangular slipbase supports are used to support a single sign, they shall not be "rigidly" connected to each other except through the sign panel. This will allow each support to act independently when impacted by an errant vehicle.
8. Wing channel shall meet ASTM A 1011 SS Gr 50 and be galvanized per ASTM A 123.
9. Excess pipe, wing channel, or windbeam shall be cut off so that it does not extend beyond the sign panel (i.e., excess support shall not be visible when the sign is viewed from the front.) Repair galvanized coating at cut support ends per Item 445, "Galvanizing."
10. Sign blanks shall be the sizes and shapes shown on the plans.
11. Additional sign clamp required on the "T-bracket" post for 24 inch high signs. Place the clamp 3 inches above bottom of sign when possible.
12. Post open ends shall be fitted with Friction Caps.

REQUIRED SUPPORT

	SIGN DESCRIPTION	SUPPORT
Regulatory	48-inch STOP sign (R1-1)	TY 10BWG(1)XX(T) TY 10BWG(1)XX(P-BM)
	60-inch YIELD sign (R1-2)	TY 10BWG(1)XX(T) TY 10BWG(1)XX(P-BM)
	48x16-inch ONE-WAY sign (R6-1)	TY 10BWG(1)XX(T) TY 10BWG(1)XX(P-BM)
	36x48, 48x36, and 48x48-inch signs	TY 10BWG(1)XX(T)
	48x60-inch signs	TY S80(1)XX(T)
Warning	48x48-inch signs (diamond or square)	TY 10BWG(1)XX(T)
	48x60-inch signs	TY S80(1)XX(T)
	48-inch Advance School X-ing sign (S1-1)	TY 10BWG(1)XX(T)
	48-inch School X-ing sign (S2-1)	TY 10BWG(1)XX(T)
	Large Arrow sign (W1-6 & W1-7)	TY 10BWG(1)XX(T)

Texas Department of Transportation
Traffic Operations Division

SIGN MOUNTING DETAILS
SMALL ROADSIDE SIGNS
TRIANGULAR SLIPBASE SYSTEM

SMD(SLIP-3)-08

©TxDOT July 2002

DN: TXDOT	CK: TXDOT	DW: TXDOT	CK: TXDOT

CONT	SECT	JOB	HIGHWAY

DIST	COUNTY	SHEET NO.
		381

9-08 REVISIONS

DATE:
FILE:

DISCLAIMER:
The use of this standard is governed by the "Texas Engineering Practice Act". No warranty of any kind is made by TxDOT for any purpose whatsoever. TxDOT assumes no responsibility for the conversion of this standard to other formats or for incorrect results or damages resulting from its use.

DATE: 4/4/2023 1:59:01 PM
FILE: G:\TXC\Projects\City_RoundRock\8819-00_WyomingSprings_PSE\03_CADD\01_Sht\8819-00_WYOMINGSPRINGS_WINDICE.dgn

NOTE: Structures north of ice line to be designed for ice.

ICE LINE

ZONE 2
(90 MPH WIND)

ZONE 3
(80 MPH WIND)

ZONE 4
(70 MPH WIND)

ZONE 4
(70 MPH WIND)

ICE LINE

ZONE 3
(80 MPH WIND)

ZONE 1
(100 MPH WIND)

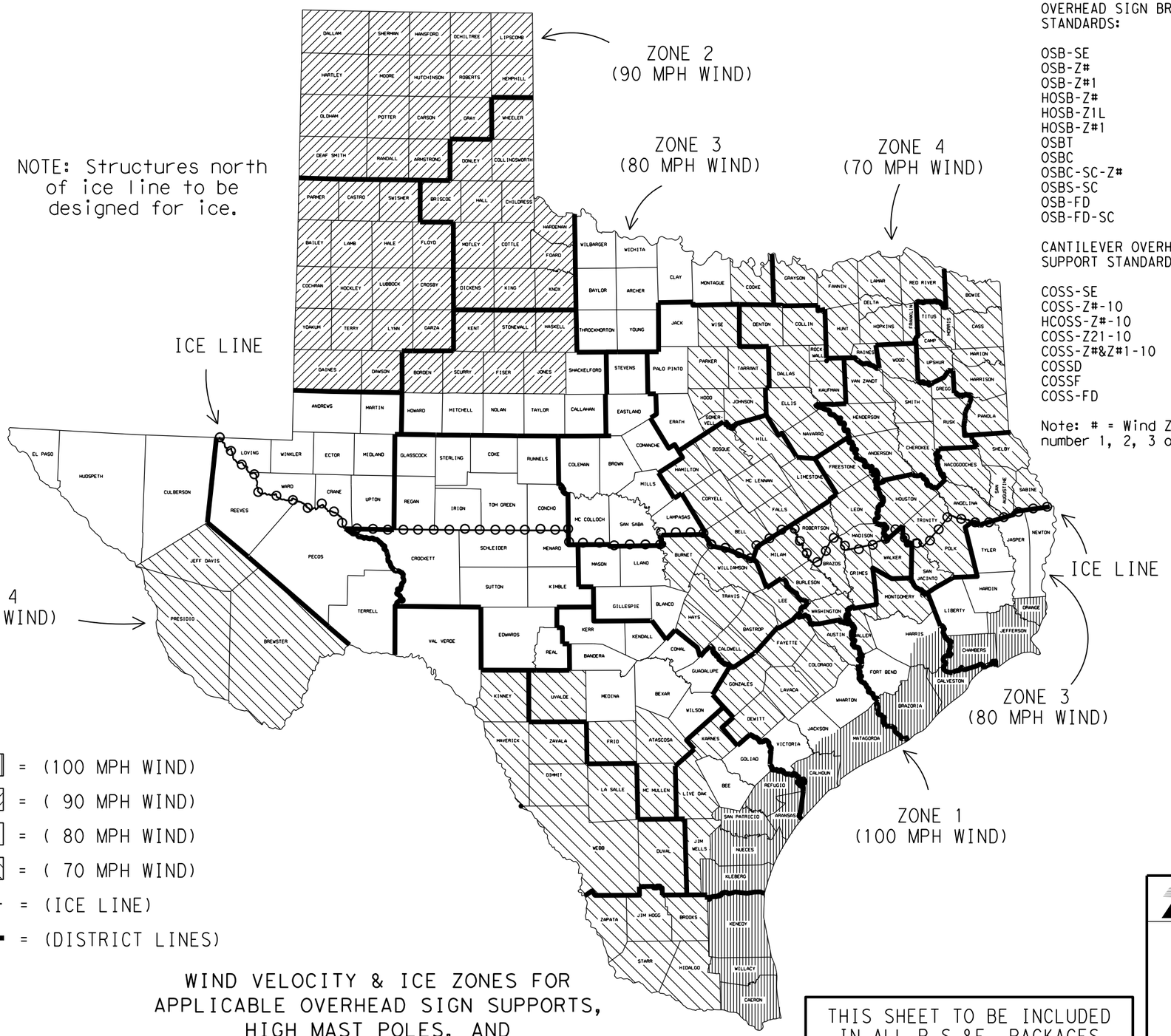

LEGEND

ZONE 1 - = (100 MPH WIND)
ZONE 2 - = (90 MPH WIND)
ZONE 3 - = (80 MPH WIND)
ZONE 4 - = (70 MPH WIND)
= (ICE LINE)
= (DISTRICT LINES)

WIND VELOCITY & ICE ZONES FOR APPLICABLE OVERHEAD SIGN SUPPORTS, HIGH MAST POLES, AND TRAFFIC SIGNAL POLES

Based on 50 Year Mean Recurrence Interval of Fastest Mile Wind Velocity at 33 feet height.

THIS SHEET TO BE INCLUDED IN ALL P.S.&E. PACKAGES CONTAINING ONE OR MORE OF THE APPLICABLE STANDARD SHEETS LISTED HEREON

APPLICABLE STANDARDS SHEETS

OVERHEAD SIGN BRIDGE STANDARDS:

OSB-SE
OSB-Z#
OSB-Z#1
HOSB-Z#
HOSB-Z1L
HOSB-Z#1
OSBT
OSBC
OSBC-SC-Z#
OSBS-SC
OSB-FD
OSB-FD-SC

CANTILEVER OVERHEAD SIGN SUPPORT STANDARDS:

COSS-SE
COSS-Z#-10
HCOSS-Z#-10
COSS-Z21-10
COSS-Z#&Z#1-10
COSSD
COSSF
COSS-FD

Note: # = Wind Zone number 1, 2, 3 or 4

HIGH MAST ILLUMINATION POLE STANDARDS:

HMIP-98
HMIF-98

WALKWAYS AND BRACKETS STANDARDS:

SWW
SB(SWL-1)

TRAFFIC SIGNAL POLE STANDARDS:

SP-80
SP-100
SMA-80
SMA-100
DMA-80
DMA-100
MA-C
MAC(ILSN)
MAD-D
TS-FD
LUM-A
CFA
LMA
TS-C
MA-DPD

FOR HARRIS CO. ONLY
Zone line is just North of US 90, around on the North, West and South sides of IH 610 and down the West side of SH 288.

FOR JACKSON CO. ONLY
Zone line is just North of SH 616.

Texas Department of Transportation

Traffic Operations Division Standard

WIND VELOCITY AND ICE ZONES

WV & IZ-14

FILE: windice.dgn	DN: TxDOT	CK: TxDOT	DW: TxDOT	CK: TxDOT
© TxDOT April 1996	CONT	SECT	JOB	HIGHWAY
REVISIONS	XXXX	XX	XXX	XXXX
8-14-Added list of applicable standards, restricting use to structures designed for Fastest Mile wind speeds.	DIST	COUNTY		SHEET NO.
	AUS	COUNTY		382

DISCLAIMER:
The use of this standard is governed by the "Texas Engineering Practice Act". No warranty of any kind is made by TxDOT for any purpose whatsoever. TxDOT assumes no responsibility for the conversion of this standard to other formats or for incorrect results or damages resulting from its use.

DATE: 4/4/2023 1:59:09 PM
FILE: G:\TXC\Projects\City_RoundRock\8819-00_WyomingSprings_PSE\03_CADD\01_Sheets\Roadway\ed1_general_14.dgn

GENERAL NOTES FOR ALL ELECTRICAL WORK

1. The location of all conduits, junction boxes, ground boxes, and electrical services is diagrammatic and may be shifted to accommodate field conditions.

2. Provide new and unused materials. Ensure that all materials and installations comply with the applicable articles of the National Electrical Code (NEC), TxDOT standards and specifications, National Electrical Manufacturers Association (NEMA), and are listed by Underwriters Laboratories (UL) or a Nationally Recognized Testing Lab (NRTL). NRTLs such as Canadian Standard Association (CSA), Intertek Testing Services NA Inc., or FM Approvals LLC can be considered equivalent to UL. Where reference is made to NEMA listed devices, International Electrotechnical Commission (IEC) listed devices will not be considered an acceptable equal to a NEMA listed device. Acceptable devices may have both a NEMA and IEC listing. Faulty fabrication or poor workmanship in any material, equipment, or installation is justification for rejection. Replace or reinstall rejected material or equipment at no additional cost to the Department.

3. Miscellaneous nuts, bolts and hardware, except for high strength bolts, may be stainless steel when plans specify galvanized, provided the bolt size is ½ in. or less in diameter.

4. Provide the following test equipment as required by the Engineer to confirm compliance with the contract and the NEC: voltmeter, ammeter, megohm meter (1000 volt DC), ground resistance tester, torque wrenches, and torque screwdrivers. Ensure all equipment has been properly calibrated within the last year. Provide calibration certification to the Engineer upon request. Operate test equipment during inspection as requested by the Engineer.

5. Install grounding as shown on the plans and in accordance with the NEC. Ensure all metallic conduits; metal poles; luminaires; and metal enclosures are bonded to the equipment grounding conductor. Provide stranded bare copper or green insulated grounding conductors. Ground rods, connectors, and bonding jumpers are subsidiary to the various bid items.

6. When required by the Engineer, notify the Department in writing of materials from the Material Producers List (MPL) intended for use on each project. Prequalified materials are listed on the MPL on TxDOT's website under "Roadway Illumination and Electrical Supplies." No substitutions will be allowed for materials on this list.

CONDUIT

A. MATERIALS

1. Provide conduit, junction boxes, fittings, and hardware as per TxDOT Departmental Material Specification (DMS) 11030 "Conduit" and Item 618 "Conduit" of TxDOT's "Standard Specifications For Construction And Maintenance Of Highways, Streets, And Bridges," latest edition. Provide conduits listed under Item 618 on the MPL under "Roadway Illumination and Electrical Supplies." Provide conduit types according to the descriptive code or as shown on the plans. Do not substitute other types of conduits for those shown. Provide liquidtight flexible metal conduit (LFMC) when flexible conduit is called for on galvanized steel rigid metallic conduit (RMC) systems. Provide liquidtight flexible nonmetallic conduit (LFNC) when flexible conduit is called for on polyvinyl chloride (PVC) systems.

2. Provide galvanized steel RMC for all exposed conduits, unless otherwise shown on the plans. Properly bond all metal conduits.

3. Unless otherwise shown on the plans, provide junction boxes with a minimum size as shown in the following table, which applies to the greatest number of conductors entering the box through one conduit with no more than four conduits per box. When a mixture of conductor sizes is present, count the conductors as if all are of the larger size. For situations not applicable to the table, size junction boxes in accordance with NEC.

AWG	3 CONDUCTORS	5 CONDUCTORS	7 CONDUCTORS
#1	10" x 10" x 4"	12" x 12" x 4"	16" x 16" x 4"
#2	8" x 8" x 4"	10" x 10" x 4"	12" x 12" x 4"
#4	8" x 8" x 4"	10" x 10" x 4"	10" x 10" x 4"
#6	8" x 8" x 4"	8" x 8" x 4"	10" x 10" x 4"
#8	8" x 8" x 4"	8" x 8" x 4"	8" x 8" x 4"

4. Junction boxes with an internal volume of less than 100 cu. in. and supported by entering raceways must have threaded entries or hubs identified for the intended purpose and supported by connection of two or more rigid metal conduits. Secure conduit within 3 ft. of the enclosure or within 18 in. of the enclosure if all conduit entries are on the same side. Mechanically secure all junction boxes with an internal volume greater than 100 cu. inches.

5. Provide hot dipped galvanized cast iron or sand cast aluminum outlet boxes for junction boxes containing only 10 AWG or 12 AWG conductors. Do not use die cast aluminum boxes. Size outlet boxes according to the NEC.

6. Do not use intermediate metal conduit (IMC) or electrical metallic tubing (EMT) unless specifically required by the plan sheets. When EMT is called for, provide junction boxes made from galvanized steel sheeting, listed and approved for outdoor use, unless otherwise noted on the plans. Size all galvanized steel junction boxes in accordance with the NEC. Provide junction boxes for IMC conduit systems that meet the same requirements for junction boxes used with RMC systems.

7. Provide PVC junction boxes intended for outdoor use on PVC conduit systems, unless otherwise noted on the plans.

8. Provide PVC elbows in PVC conduit systems, unless otherwise shown on the plans. Use only a flat, high tensile strength polyester fiber pull tape for pulling conductors through the PVC conduit system. When galvanized steel RMC elbows are specifically called for in the plans and any portion of the RMC elbow is buried less than 18 in., ground the RMC elbow by means of a grounding bushing on a rigid metal extension. Grounding of the rigid metal elbow is not required if the entire RMC elbow is encased in a minimum of 2 in. of concrete. PVC extensions are allowed on these concrete encased rigid metal elbows. RMC or PVC elbows are subsidiary to various bid items.

9. When required, provide High-Density Polyethylene (HDPE) conduit with factory installed internal conductors according to Item 622 "Duct Cable." At the Contractor's request and with approval by the Engineer, substitute HDPE conduit with no conductors for bored schedule 40 or schedule 80 PVC conduit bid under Item 618. Ensure bored HDPE substituted for PVC is schedule 40 and of the same size PVC called for in the plans. Ensure the substituted HDPE meets the requirements of Item 622, except that the conduit is supplied without factory-installed conductors. Make the transition of the HDPE conduit to PVC (or RMC elbow when required) at the bore pit. Provide conduit of the size and schedule as shown on the plans. Do not extend substituted conduit into ground boxes or foundations. Provide PVC or galvanized steel RMC elbows as called for at all ground boxes and foundations.

10. Use two-hole straps when supporting 2 in. and larger conduits. On electrical service poles, properly sized stainless steel or hot dipped galvanized one-hole standoff straps are allowed on the service riser conduit.

B. CONSTRUCTION METHODS

1. Provide and install expansion joint conduit fittings on all structure-mounted conduits at the structure's expansion joints to allow for movement of the conduit. In addition, provide and install expansion joint fittings on all continuous runs of galvanized steel RMC conduit externally exposed on structures such as bridges at maximum intervals of 150 ft. When requested by the project Engineer, supply manufacturer's specification sheet for expansion joint conduit fittings. Repair or replace expansion joint fittings that do not allow for movement at no additional cost to the Department. Provide the method of determining the amount of expansion to the Engineer upon request. Do not use LFMC or LFNC as a substitute for the required expansion conduit fittings.

2. Space all conduit supports at maximum intervals of 5 ft. Install conduit spacers when attaching metal conduit to surface of concrete structures. See "Conduit Mounting Options" on ED(2). Install conduit support within 3 ft. of all enclosures and conduit terminations.

3. Do not attach conduit supports directly to pre-stressed concrete beams except as shown specifically in the plans or as approved by the Engineer.

4. Unless otherwise shown on the plans, jack or bore conduit placed beneath existing roadways, driveways, sidewalks, or after the base or surfacing operation has begun. Backfill and compact the bore pits below the conduit per Item 476 "Jacking, Boring, or Tunneling Pipe or Box" prior to installing conduit or duct cable to prevent bending of the connections.

5. When placing conduit in the sub-grade of new roadways, backfill all trenches with excavated material unless otherwise noted on the plans. When placing conduit in the sub-base of new roadways, backfill all trenches with cement-stabilized base as per requirements of Items 110 "Excavation", 400 "Excavation and Backfill for Structures", 401 "Flowable Backfill", 402 "Trench Excavation Protection", and 403 "Temporary Special Shoring."

6. Provide and place warning tape approximately 10 in. above all trenched conduit as per Item 618.

7. During construction, temporarily cap or plug open ends of all conduit and raceways immediately after installation to prevent entry of dirt, debris and animals. Temporary caps constructed of durable duct tape are allowed. Tightly fix the tape to the conduit opening. Clean out the conduit and prove it clear in accordance with Item 618 prior to installing any conductors.

8. Ensure conduit entry into the top of any enclosure is waterproof by installing conduit sealing hubs or using boxes with threaded bosses. This includes surface mounted safety switches, meter cans, service enclosures, auxiliary enclosures and junction boxes. Grounding bushings on water tight sealing hubs are not required.

9. Fit the ends of all PVC conduit terminations with bushings or bell end fittings. Provide and install a grounding type bushing on all metal conduit terminations.

10. Install a bonding jumper from each grounding bushing to the nearest ground rod, grounding lug, or equipment grounding conductor. Ensure all bonding jumpers are the same size as the equipment grounding conductor. Bonding of conduit used as a casing under roadways for duct cable is not required, if the duct extends the full length through the casing.

11. At all electrical services, install a 6 AWG solid copper grounding electrode conductor.

12. Place conduits entering ground boxes so that the conduit openings are between 3 in. and 6 in. from the bottom of the box. See the ground box detail on sheet ED(4).

13. Seal ends of all conduits with duct seal, expandable foam, or by other methods approved by the Engineer. Seal conduit immediately after completion of conductor installation and pull tests. Do not use duct tape as a permanent conduit sealant. Do not use silicone caulk as a conduit sealant.

14. File smooth the cut ends of all mounting strut and conduit. Before installing, paint the field cut ends of all mounting strut and RMC (threaded or non-threaded) with zinc rich paint (94% or more zinc content) to alleviate overspray. Use zinc rich paint to touch up galvanized material as allowed under Item 445 "Galvanizing." Do not paint non-galvanized material with a zinc rich paint as an alternative for materials required to be galvanized.

Texas Department of Transportation

Traffic Operations Division Standard

ELECTRICAL DETAILS CONDUITS & NOTES

ED(1)-14

FILE:	ed1-14.dgn	DN:	CK:	DW:	CK:
© TxDOT	October 2014	CONT	SECT	JOB	HIGHWAY
	REVISIONS	XXXX	XX	XXX	XXXX
		DIST	COUNTY		SHEET NO.
		AUS	COUNTY		383

DISCLAIMER:
The use of this standard is governed by the "Texas Engineering Practice Act". No warranty of any kind is made by TxDOT for any purpose whatsoever. TxDOT assumes no responsibility for the conversion of this standard to other formats or for incorrect results or damages resulting from its use.

DATE: 4/4/2023 1:59:10 PM
FILE: G:\TXC\Projects\City_RoundRock\8819-00_WyomingSprings_PSE\03_CADD\01_Sht\8 3-56MES4SProg\0ed2_04.dgn

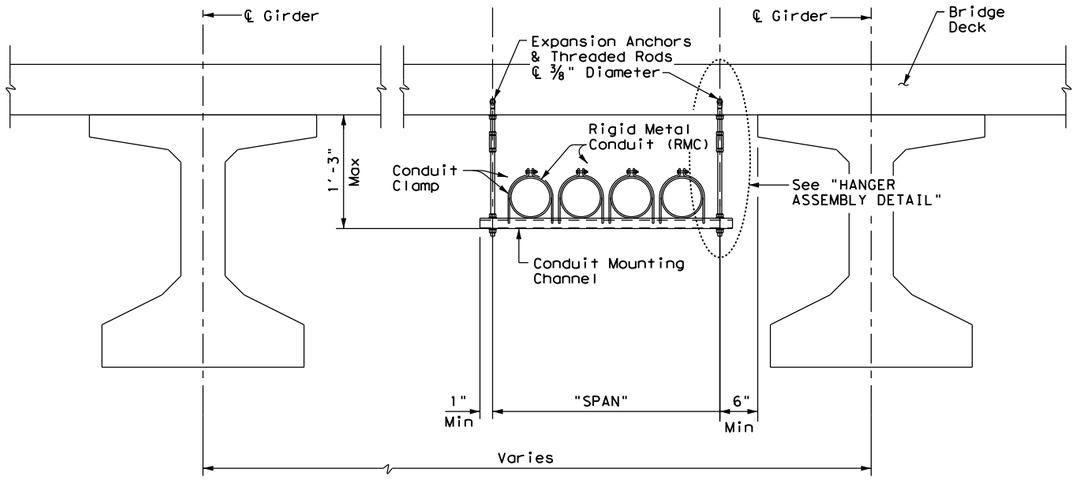

CONDUIT HANGING DETAIL

CONDUIT MOUNTING CHANNEL		
"SPAN"	"W" x "H"	"T"
less than 2'	1 5/8" x 1 3/8"	12 Ga.
2'-0" to 2'-6"	1 5/8" x 1 5/8"	12 Ga.
>2'-6" to 3'-0"	1 5/8" x 2 7/16"	12 Ga.

Channels with round or short slotted hole patterns are allowed, if the load carrying capacity is not reduced by more than 15%.

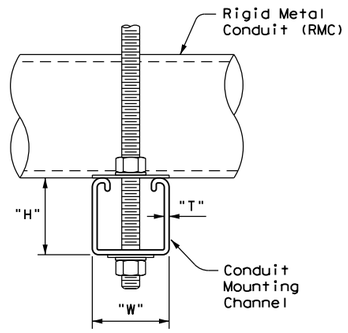

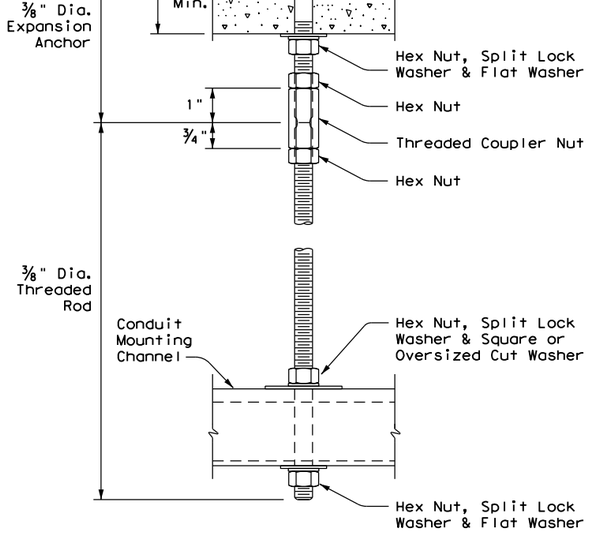

HANGER ASSEMBLY DETAIL

ELECTRIC CONDUIT TO BRIDGE DECK ATTACHMENT

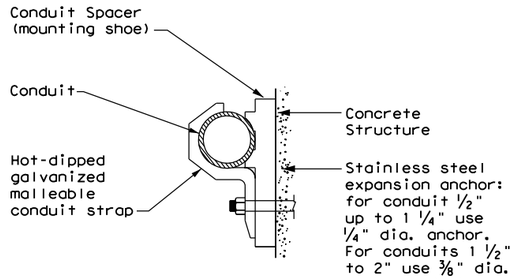

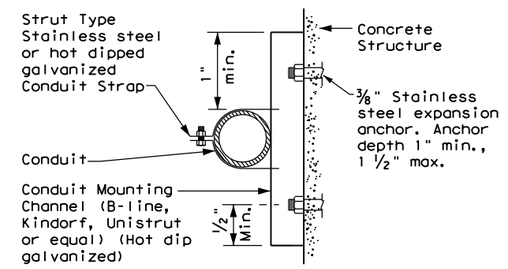

CONDUIT MOUNTING OPTIONS

Attachment to concrete surfaces
See ED(1)B.2

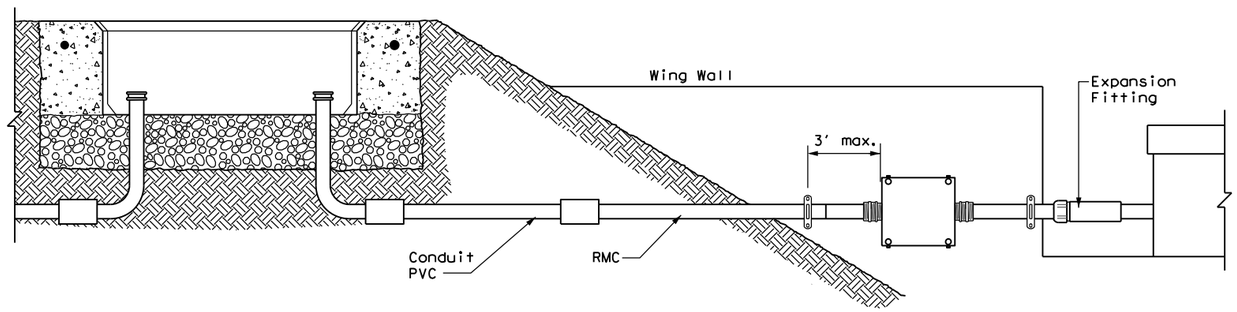

TYPICAL CONDUIT ENTRY TO BRIDGE STRUCTURE DETAIL

EXPANSION ANCHOR NOTES FOR BRIDGE DECK ATTACHMENT

1. Use torque controlled mechanical expansion anchors that are approved for use in cracked concrete by the International Code Council, Evaluation Service (ICC-ES). The chosen anchor product shall have a designated ICC-ES Evaluation Report number, and its approval status shall be maintained on the ICC-ES website under Division 031600 for Concrete Anchors.

2. Unless otherwise approved by the Engineer: do not use adhesive anchors; do not use expansion anchors that are not included in the ICC-ES approval list; and do not use expansion anchors that are only approved for use in uncracked concrete.

3. Use anchors manufactured with stainless steel expansion wedges. Anchors manufactured with carbon steel expansion wedges are not allowed. Anchor bodies can be either zinc-plated carbon steel or stainless steel. For application in marine environment, both the anchor body and expansion wedge shall be stainless steel.

4. Install anchors as shown on the plans and in accordance with the anchor manufacturer's published installation instructions. Arrange a field demonstration test to evaluate the procedures and tools. The test shall be witnessed and approved by the Engineer prior to furnishing anchors on the structure.

5. Prior to hole drilling, use rebar locator to ensure clearing of existing deck strands or reinforcement. Install anchors to ensure a minimum effective embedment depth, (h_{ef}), as shown. Increase (h_{ef})as needed to ensure sufficient thread length for proper torqueing and tightening of anchors.

6. Use anchors of minimum 1600 Lbs tensile capacity (minimum of steel, concrete breakout, and concrete pullout strengths as determined by ACI 318 Appendix D) at the required minimum embedment depth (h_{ef}). No lateral loads shall be introduced after conduit installation.

Texas Department of Transportation

Traffic Operations Division Standard

ELECTRICAL DETAILS
CONDUIT SUPPORTS

ED(2)-14

FILE: ed2-14.dgn	DN: TxDOT	CK: TxDOT	DW: TxDOT	CK: TxDOT
©TxDOT October 2014	CONT	SECT	JOB	HIGHWAY
REVISIONS	XXXX	XX	XXX	XXXX
	DIST	COUNTY		SHEET NO.
	AUS	COUNTY		384

DISCLAIMER:
The use of this standard is governed by the "Texas Engineering Practice Act". No warranty of any kind is made by TxDOT for any purpose whatsoever. TxDOT assumes no responsibility for the conversion of this standard to other formats or for incorrect results or damages resulting from its use.

DATE: 4/4/2023 1:59:12 PM
FILE: G:\TxDOTProjects\City_RoundRock\8819-00_WyomingSprings_PSE\03_CADD\01_Sheets\SMS\ED(3)-14_Electrical_Conductors.dgn

ELECTRICAL CONDUCTORS

A. MATERIAL INFORMATION

1. Provide Type XHHW insulated conductors in accordance with Departmental Material Specification (DMS)11040 "Conductors" and Item 620 "Electrical Conductors." Provide conductors as listed on the Material Producers List (MPL) on the Department web site under "Roadway Illumination and Electrical Supplies" Item 620. Color code insulated conductors in conformance with the NEC. Identify grounded (neutral) conductors with white insulation. Identify grounding conductors (ground wires) with green insulation or bare conductors. Identify ungrounded (hot) conductors with any color insulation except green, white, or gray. Keep color scheme consistent throughout the wiring system. Identify conductors 6 American Wire Gauge (AWG) and smaller by continuous color jacket. Identify electrical conductors 4 AWG and larger by continuous color jacket or by colored tape. When identifying conductors with colored tape, mark at least 6 in. of the conductor's insulation with half laps of tape.
2. Provide a solid copper 6 AWG grounding electrode conductor to bond the electrical service equipment to the concrete encased grounding electrode or the ground rod at the service location. Connect the grounding electrode conductor to the ground rod with a UL listed connector in accordance with DMS 11040. Connect the grounding electrode conductor to the concrete encased grounding electrode as shown in the plans.
3. Where two or more circuits are present in one conduit or enclosure, permanently identify the conductors of each branch circuit by attaching a non-metallic tag around both circuit conductors at each accessible location. Provide tags with two straps, large enough to indicate circuit number, letter, or other identification as shown in the plans. Print circuit identification on the tag with a permanent marker.
4. Use listed compression or screw type pressure connectors, terminal blocks, or split bolt connectors for splicing as specified in DMS 11040. Use hot melt adhesive tape to fill the gap and seal the ends of heat shrink tubing. Provide UL listed gel-filled insulating splice covers. Splicing materials, insulating materials, breakaway disconnects, splice covers, and fuse holders are subsidiary to various bid items.

B. CONSTRUCTION METHODS

1. Use only a flat, high tensile strength polyester fiber pull tape for pulling conductors through the conduit system. After installing conductors in conduit, perform conductor pull test. If a conductor cannot be freely pulled, make any needed alterations or repairs at no additional cost to the department. Perform insulation resistance tests in accordance with Item 620. Coordinate with the Engineer to witness the tests.
2. Leave 2 ft. minimum, 3 ft. maximum length for each conductor up to the splice in ground boxes. Leave 3 ft. minimum, 4 ft. maximum length of conductor in ground boxes when pulled through with no splice. Leave 1 ft. minimum, 1.5 ft. maximum length of conductor at enclosures, weatherheads and pole bases.
3. Make splices only in junction boxes, ground boxes, pole bases, or electrical enclosures and use only listed compression or screw type pressure connectors, terminal blocks, or split bolt connectors. Insulate splices with heavy wall heat shrink tubing or gel-filled insulating splice covers to provide a watertight splice. Overlap conductor insulation with heat shrink tubing a minimum of 2 in. past both sides of the splice. Where heat shrink tubing may not shrink sufficiently to provide a watertight seal around the individual conductors, prior to heating the tubing, increase the diameter of the conductor insulation using hot melt adhesive tape to provide a watertight seal between the individual conductors and the heat shrink tubing. Ensure the tape extends past the heat shrink tubing. Use hot melt adhesive tape to fill the gap and seal the ends of heat shrink tubing. Heat shrink tubing that appears to have been burned, or overheated, is considered defective and must be replaced.
4. Size and install gel-filled insulating splice covers according to manufacturer's specifications when used in place of heat shrink tubing.
5. Wire nuts with factory applied waterproof sealant may be used for 8 AWG or smaller conductors in above ground junction boxes, but not in pole bases or ground boxes. Install wire nuts in an upright position to prevent the accumulation of water.
6. Support conductors in illumination poles with a J-hook at the top of the pole.
7. When terminating conductors, remove the insulation and jacketing material without nicking the individual strands of the conductor. Conductors with nicked individual conductor strands or removed strands will be considered damaged.
8. Replace conductors and cables that are damaged beyond repair or that fail an insulation resistance test at no additional cost to the department.
9. Do not repair damaged conductors with duct tape, electrical tape, or wire nuts. Use only approved splicing methods.
10. Do not terminate more than one conductor under a single connector, unless the connector is rated for multiple conductors. Do not exceed the pressure connector's listing for maximum number and size of conductors allowed.
11. Install breakaway connectors on conductors bid under Item 620 whenever those conductors pass through a breakaway support device. Follow manufacturer's instructions when terminating conductors to breakaway connectors. Properly torque threaded connections. Proper terminations are critical to the safe operation of breakaway devices. Trim waterproofing boots on breakaway connectors to fit snugly around the conductor to ensure waterproof connection. Only one conductor may enter a single opening in a boot. Provide waterproof boots with the correct number of openings. Leave unused openings factory sealed. Use prequalified breakaway connectors as shown on the MPL.
12. Provide and install a separate stranded equipment grounding conductor (EGC) in all conduits that contain circuit wiring of 50 volts or more. Unless shown elsewhere, size the EGC to be the same size as the largest current carrying conductor contained in the conduit. Ensure all EGCs are bonded together at every accessible location. For traffic signal installations, provide a minimum size 8 AWG EGC. The EGC is paid for under Item 620.

C. TEMPORARY WIRING

1. Install temporary conductors and electrical equipment in accordance with the NEC article "Temporary Installations" and Department standard sheets.
2. Provide a ground fault circuit interrupter (GFCI) for power outlets for portable electrical equipment, power tools, ice machines, ice storage bins and refrigerators located outdoors at grade. GFCI may be any one of the following: molded cord and plug set, receptacle, or circuit breaker type.
3. Use listed wire nuts with factory applied sealant for temporary wiring where approved.
4. Enclose conductor splices within a listed enclosure or ground box, or ensure the splices are more than 10 ft. above grade vertically and more than 5 ft. horizontally from any metal structure. Where installing temporary conductors in areas subject to vehicle traffic or mobile construction equipment, ensure the vertical clearance to ground is at least 18 ft. when measured at the lowest point. Ground messenger wires that support power conductors in conformance with the NEC.
5. Protect and when necessary repair any existing electrical conduits uncovered during the construction process in a timely manner and in conformance with the NEC.

GROUND RODS & GROUNDING ELECTRODES

A. MATERIAL INFORMATION

1. Provide and install a grounding electrode at electrical services. Provide ground rods according to DMS 11040 and the plans. Larger diameter or longer length rods may be called for in some specific locations, see the individual plans sheets. Concrete encased grounding electrodes may be called for in specific locations including electrical service, see individual plan sheets.

B. CONSTRUCTION METHODS

1. Furnish auxiliary ground rods for lightning protection and install in soil, concrete, or both, as called for in the plans. For ground rods installed in concrete, ensure the connection of the conductor to the ground rod is readily accessible for inspection or repairs. For ground rods installed in soil, ensure that the upper end is between 2 to 4 in. below finished grade.
2. Do not place ground rods in the same drilled hole as a timber pole.
3. Install ground rods so the imprinted part number is at the upper end of the rod.
4. Remove all non-conductive coatings such as concrete splatter from the rod at the clamp location.
5. Route all conductors as short and straight as possible for connection to lightning protection ground rods. When a bend is required, ensure a minimum radius bend of four inches for these conductors.
6. Unless otherwise called for in the plans, protect grounding electrode conductors with non-metallic conduit. When protecting grounding electrode conductors with metal conduit, provide and install a grounding type bushing and properly sized bonding jumper on each end of the metal conduit.
7. Written authorization is required before installing a ground rod in a horizontal trench for rocky soil or a solid rock bottom.

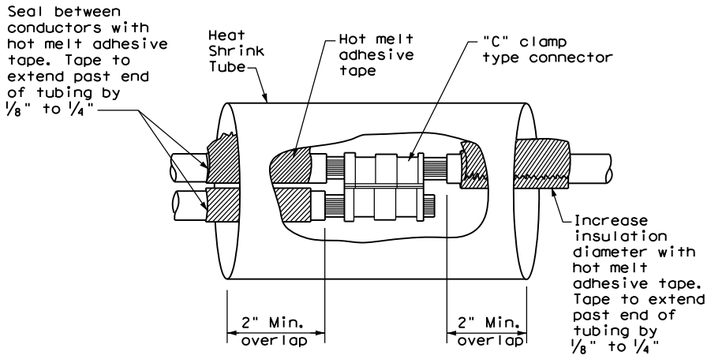

SPLICE OPTION 1
Compression Type

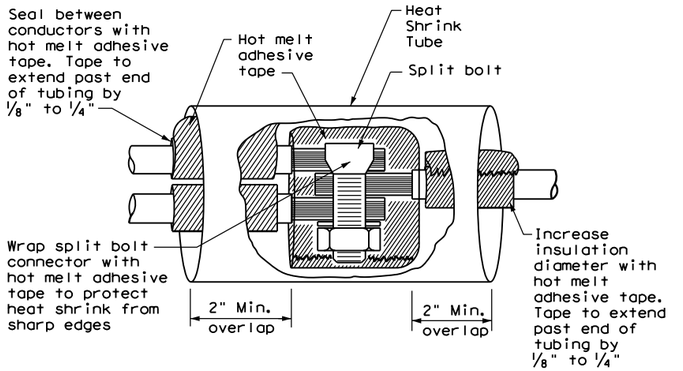

SPLICE OPTION 2
Split Bolt Type

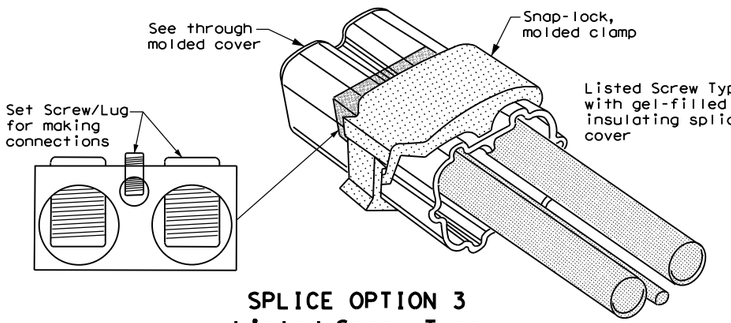

SPLICE OPTION 3
Listed Screw Type

Texas Department of Transportation

Traffic Operations Division Standard

ELECTRICAL DETAILS CONDUCTORS

ED(3)-14

FILE:	ed3-14.dgn	DN: TxDOT	CK: TxDOT	DW: TxDOT	CK: TxDOT
©TxDOT	October 2014	CONT	SECT	JOB	HIGHWAY
REVISIONS		XXXX	XX	XXX	XXXX
		DIST	COUNTY		SHEET NO.
		AUS	COUNTY		385

71C

DISCLAIMER:
The use of this standard is governed by the "Texas Engineering Practice Act". No warranty of any kind is made by TxDOT for any purpose whatsoever. TxDOT assumes no responsibility for the conversion of this standard to other formats or for incorrect results or damages resulting from its use.

DATE: 4/4/2023 1:59:13 PM
FILE: G:\TXC\Projects\City_RoundRock\8819-00_WyomingSprings_PSE\03_CADD\01_Shts\ED4(4)_14.dgn

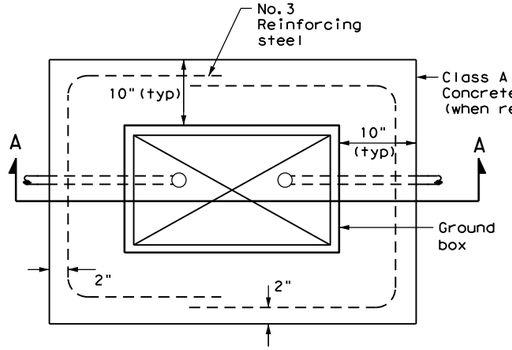

PLAN VIEW

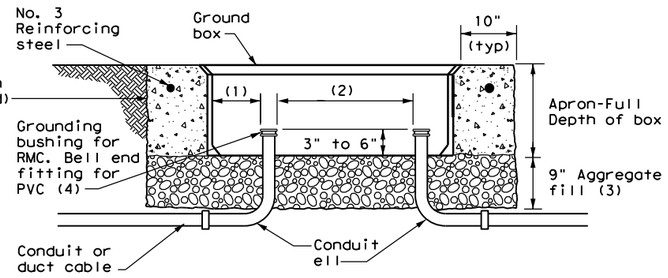

SECTION A - A

APRON FOR GROUND BOX

(1) Uniformly space ends of conduits within the ground box. Position ends of conduits so that ground box walls do not interfere with the installation of grounding bushings or bell end fittings.

(2) Maintain sufficient space between conduits to allow for proper installation of bushing.

(3) Place aggregate under the box, not in the box. Aggregate should not encroach on the interior volume of the box.

(4) Install a grounding bushing on the upper end of all RMC terminating in a ground box. Ground RMC elbows when any part of the elbow is less than 18 in. below the bottom of the ground box. Install a PVC bushing or bell end fitting on the upper end of all PVC conduits terminating in a ground box.

GROUND BOX DIMENSIONS	
TYPE	OUTSIDE DIMENSIONS (INCHES) (Width x Length X Depth)
A	12 X 23 X 11
B	12 X 23 X 22
C	16 X 29 X 11
D	16 X 29 X 22
E	12 X 23 X 17

GROUND BOX COVER DIMENSIONS								
TYPE	DIMENSIONS (INCHES)							
	H	I	J	K	L	M	N	P
A, B & E	23 1/4	23	13 3/4	13 1/2	9 7/8	5 1/8	1 3/8	2
C & D	30 1/2	30 1/4	17 1/2	17 1/4	13 1/4	6 3/4	1 3/8	2

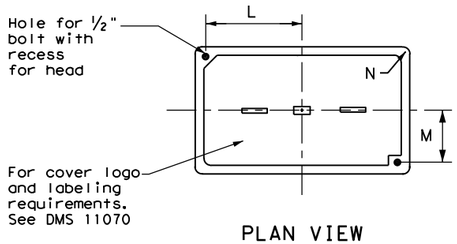

PLAN VIEW

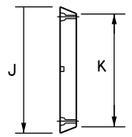

END

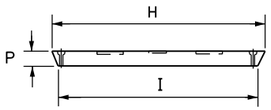

SIDE

GROUND BOX COVER

GROUND BOXES

A. MATERIALS

1. Provide polymer concrete ground boxes measuring 16x30x24 in. (WxLxD) or smaller in accordance with Departmental Material Specification (DMS) 11070 "Ground Boxes" and Item 624 "Ground Boxes."

2. Provide Type A, B, C, D, and E ground boxes as shown in the plans, and as listed on the Material Producers List (MPL) on the Department web site under "Roadway Illumination and Electrical Supplies," Item 624.

3. Ensure ground box cover is correctly labeled in accordance with DMS 11070.

4. Provide larger ground boxes in accordance with Item 624 and as shown in the plans.

B. CONSTRUCTION METHODS

1. Remove all gravel and dirt from conduit. Cap all conduits prior to placing aggregate and setting ground box. Provide Grade 3 or 4 coarse aggregate as shown on Table 2 of Item 302 "Aggregates for Surface Treatments." Ensure aggregate bed is in place and at least 9 inches deep, prior to setting the ground box. Install ground box on top of aggregate.

2. Cast ground box aprons in place. Reinforcing steel may be field bent. Ensure the depth of concrete for the apron extends from finished grade to the top of the aggregate bed under the box. Ground box aprons, including concrete and reinforcing steel, are subsidiary to ground boxes when called for by descriptive code.

3. Keep bolt holes in the box clear of dirt. Bolt covers down when not working in ground boxes.

4. Install all conduits and ells in a neat and workmanlike manner. Uniformly space conduits so grounding bushings and bell end fittings can easily be installed.

5. Temporarily seal all conduits in the ground box until conductors are installed.

6. Permanently seal conduits immediately after the completion of conductor installation and pull tests. Permanently seal the ends of all conduits with duct seal, expandable foam, or other method as approved. Do not use duct tape as a permanent conduit sealant. Do not use silicone caulk as a sealant.

7. When a ground rod is present in a ground box, bond all equipment grounding conductors together and to the ground rod with listed connectors.

8. When a type B or D ground box is stacked to meet volume requirements, it is allowable to cut an appropriately sized hole for conduit entry in the side wall at least 18 inches below grade.

9. If an existing ground box in the contract has a metal cover, bond the cover to the equipment grounding conductor with a 3 ft. long stranded bonding jumper the same size as the grounding conductor. The bonding jumper is subsidiary to various bid items. Verify existing ground boxes with metal covers are shown on the plans, with notes fully describing the work required.

10. If other ground boxes with metal covers are within the project limits but are not part of the contract, the Engineer may direct the Contractor to bond the metal covers, identifying the specific boxes in writing. This work will be paid for separately.

11. Bond metal ground box covers to the grounding conductor with a tank ground type lug.

Texas Department of Transportation

Traffic Operations Division Standard

ELECTRICAL DETAILS
GROUND BOXES

ED(4)-14

FILE: ed4-14.dgn	DN: TxDOT	CK: TxDOT	DW: TxDOT	CK: TxDOT
©TxDOT October 2014	CONT	SECT	JOB	HIGHWAY
REVISIONS	XXXX	XX	XXX	XXXX
	DIST	COUNTY		SHEET NO.
	AUS	COUNTY		386

71D

DISCLAIMER:
The use of this standard is governed by the "Texas Engineering Practice Act". No warranty of any kind is made by TxDOT for any purpose whatsoever. TxDOT assumes no responsibility for the conversion by TxDOT for any purpose whatsoever. TxDOT assumes no responsibility for incorrect results or damages resulting from its use.

DATE: 4/4/2023 1:59:14 PM
FILE: G:\TXC\Projects\City_RoundRock\8819-00_WyomingSprings_PSE\03_CADD\01_Sht\8819-00_WyomingSprings_PSE_ED5-14.dgn

ELECTRICAL SERVICES NOTES

1. Provide new materials. Ensure installation and materials comply with the applicable provisions of the National Electrical Code (NEC) and National Electrical Manufacturers Association (NEMA) standards. Ensure material is Underwriters Laboratories (UL) listed. Provide and install electrical service conduits, conductors, disconnects, contactors, circuit breaker panels, and branch circuit breakers as shown on the Electrical Service Data chart in the plans. Faulty fabrication or poor workmanship in material, equipment, or installation is justification for rejection. Where manufacturers provide warranties and guarantees as a customary trade practice, furnish these to the State.

2. Provide electrical services in accordance with Electrical Details standard sheets, Departmental Material Specification (DMS) 11080 "Electrical Services,"DMS 11081 "Electrical Services-Type A," DMS 11082 "Electrical Services-Type C," DMS 11083 "Electrical Services-Type D," DMS 11084 "Electrical Services-Type T," DMS 11085 "Electrical Services-Pedestal (PS)", and Item 628 "Electrical Services" of the Standard Specifications. Provide electrical service types A, C, and D, as listed on the Material Producers List (MPL) on the Department web site under "Roadway Illumination and Electrical Supplies," Item 628. Provide other service types as detailed on the plans.

3. Provide all work, materials, services, and any incidentals needed to install a complete electrical service as specified in the plans.

4. Coordinate with the Engineer and the utility provider for metering and compliance with utility requirements. Primary line extensions, connection charges, meter charges, and other charges by the utility company to provide power to the location are paid for in accordance with Item 628. Get approval for the costs associated with these charges prior to engaging the utility company to do the work. Consult with the utility provider to determine costs and requirements, and coordinate the work as approved.

5. The enclosure manufacturer will provide Master Lock Type 2 with brass tumblers keyed #2195 for all custom electrical enclosures. Installing Contractor is to provide Master Lock #2195 Type 2 with brass tumblers for "off the shelf" enclosures. Master Lock #2195 keys and locks become property of the State. Unless otherwise approved, do not energize electrical service equipment until locks are installed.

6. Enclosures with external disconnects that de-energize all equipment inside the enclosure do not need a dead front trim. Protect incoming line terminations from incidental contact as required by the NEC.

7. When galvanized is specified for nuts, screws, bolts or miscellaneous hardware, stainless steel may be used.

8. Provide wiring and electrical components rated for 75°C. Provide red, black, and white colored XHHW service entrance conductors of minimum size 6 American Wire Gauge (AWG). Identify size 6 AWG conductors by continuous color jacket. Identify electrical conductors sized 4 AWG and larger by continuous color jacket or by colored tape. Mark at least 6 inches of the conductor's insulation with half laps of colored tape, when identifying conductors. Ensure each service entrance conductor exits through a separately bushed non-metallic opening in the weatherhead. The lengths of the conductors outside the weatherhead are to be 12 inches minimum, 18 inches maximum, or as required by utility.

9. All electrical service conduit and conductors attached to the electrical service including the riser or the elbow below ground are subsidiary to the electrical service. For an underground utility feed, all service conduit and conductors after the elbow, including service conduit and conductors for the utility pole riser when furnished by the Contractor, will be paid for separately.

10. Provide rigid metal conduit (RMC) for all conduits on service, except for the ½ in. PVC conduit containing the electrical service grounding electrode conductor. Size the service entrance conduit as shown in the plans. Ensure conduit for branch circuit entry to enclosure is the same size as that shown on the layout sheets for branch circuit conduit. Extend all rigid metal conduits a minimum of 6 inches underground and then couple to the type and schedule of the conduit shown on the layout for that particular branch circuit. Install a grounding bushing on the RMC where it terminates in the service enclosure.

11. Use of liquidtight flexible metal conduit (LFMC) is allowed between the meter and service enclosure when they are mounted 90 to 180 degrees to each other. Size the LFMC the same size as service entrance conduit. LFMC must not exceed 3 feet in length. Strap LFMC within 1 foot of each end. LFMC less than 12 inches in length need not be strapped. Each end of LFMC must have a grounding bushing or be terminated with a grounding fitting. The LFMC must contain a grounded (neutral) conductor. Ensure any bend in LFMC never exceeds 180 degrees. A pull test is required on all installed conductors, with at least six inches of free conductor movement demonstrated to the satisfaction of the Engineer.

12. Ensure all mounting hardware and installation details of services conform to utility company specifications.

13. For all electrical service enclosures listed under Item 628 on the MPL, the UL 508 enclosure manufacturers will prepare and submit a schematic drawing unique to each service. Before shipment to the job site, place the applicable laminated schematic drawings and the laminated plan sheet showing the electrical service data chart used to build the enclosure in the enclosure's data pocket. The installing contractor will copy and laminate the actual project plan sheets detailing all equipment and branch circuits supplied by that service. The laminated plan sheets are to be placed in the service enclosure's document pocket. Reduce 11 in. x 17 in. plan sheets to 8 ½ in. x 11 in. before laminating. If the installation differs from the plan sheets, the installing contractor is to redline plan sheets before laminating.

14. When providing an "Off The Shelf" Type D or Type T service, provide laminated plan sheets detailing equipment and branch circuits supplied by that service. Reduce 11 in. x 17 in. plan sheets to 8 ½ in. x 11 in before laminating. Deliver these drawings before completion of the work to the Engineer, instead of placing in enclosure that has no door pocket.

15. Do not install conduit in the back wall of a service enclosure where it would penetrate the equipment mounting panel inside the enclosure. Provide grounding bushings on all metal conduits, and terminate bonding jumpers to grounding bus. Grounding bushings are not required when the end of the metal conduit is fitted with a conduit sealing hub or threaded boss, such as a meter base hub.

SERVICE ASSEMBLY ENCLOSURE

1. Provide threaded hub for all conduit entries into the top of enclosure.

2. Type galvanized steel (GS) enclosures may be used for Type C panelboards and for Type D and T services that do not use an enclosure mounted photocell or lighting contactor. Provide GS enclosures in accordance with DMS 11080, 11082, 11083, and 11084.

3. Provide aluminum (AL) and stainless steel (SS) enclosures for Types A, C, and D in accordance with DMS 11080, 11081, 11082, 11083, and 11084. Do not paint stainless steel.

4. Provide pedestal service (PS) enclosures in accordance with ED(9) and DMS 11080 and 11085. Do not provide GS pedestal services. If GS is shown in the PS descriptive code, provide an AL enclosure.

MAIN DISCONNECT & BRANCH CIRCUIT BREAKERS

1. Field drill flange-mounted remote operator handle if needed, to ensure handle is lockable in both the "On" and "Off" positions.

2. When the utility company provides a transformer larger than 50 KVA, verify that the available fault current is less than the circuit breaker's ampere interrupting capacity (AIC) rating and provide documentation from the electric utility provider to the Engineer.

PHOTOELECTRIC CONTROL

1. Provide photocell as listed on the MPL. Move, adjust, or shield the photocell from stray or ambient night time light to ensure proper operation. Mount photocell facing north when practical. Mount top of pole photocells as shown on Top Mounted Photocell Detail.

* ELECTRICAL SERVICE DATA

Elec. Service ID	Plan Sheet Number	Electrical Service Description	Service Conduit **Size	Service Conductors No./Size	Safety Switch Amps	Main Ckt. Bkr. Pole/Amps	Two-Pole Contractor Amps	Panelbd/ Loadcenter Amp Rating	Branch Circuit ID	Branch Ckt. Bkr. Pole/Amps	Branch Circuit Amps	KVA Load
SB 183	289	ELC SRV TY A 240/480 100(SS)AL(E)SF(U)	2"	3/#2	100	2P/100	100	N/A	Lighting NB	2P/40	26	28.1
									Lighting SB	2P/40	25	
									Underpass	1P/20	15	
NB Access	30	ELC SRV TY D 120/240 060(NS)SS(E)TS(O)	1 ¼"	3/#6	N/A	2P/60		100	Sig. Controller	1P/30	23	5.3
							30		Luminaires	2P/20	9	
									CCTV	1P/20	3	
2nd & Main	58	ELC SRV TY T 120/240 000(NS)GS(N)SP(O)	1 ¼"	3/#6	N/A	N/A	N/A	70	Flashing Beacon 1	1P/20	4	1.0
									Flashing Beacon 2	1P/20	4	

* Example only, not for construction. All new electrical services must have electrical service data chart specific to that service as shown in the plans.

** Verify service conduit size with utility. Size may change due to utility meter requirements. Ensure conduit size meets the National ELectrical Code.

EXPLANATION OF ELECTRICAL SERVICE DESCRIPTIVE CODE

ELEC SERV TY X XXX/XXX XXX (XX) XX (X) XX (X)

Schematic Type

Service Voltage V / V

Disconnect Amp Rating
000 indicates main lug only/
Typically Type T

(SS)= Safety Switch Ahead of Meter-Check with Utility
(NS)= No safety Switch Ahead of Meter-Check with Utility

Enclosure Type
GS= Galvanized steel("off the shelf")
SS= Stainless steel(Custom Enclosure)See MPL
AL= Aluminum (Custom Enclosure)See MPL

Photocell Mounting Location
(E)= Inside Service/Enclosure Mounted
(T)= Top of pole
(L)= Luminaire mounted
(N)= None/No Photocell or Lighting Contactor Required

Service Support Type
GC= Granite concrete
OC= Other concrete
TP= Timber pole
SP= Steel pole
SF= Steel frame
OT= Pole by others or paid for separately
EX= Existing pole
TS= Service on traffic signal pole
PS= Pedestal Service

O= Overhead Service Feed from Utility
U= Underground Service Feed from Utility

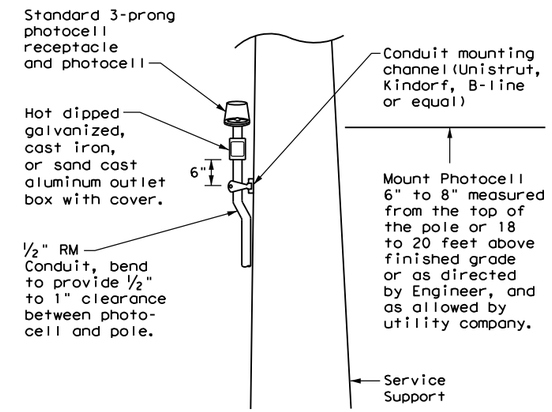

TOP MOUNTED PHOTOCELL

Install conduit strap maximum 3 feet from box. 5 foot maximum spacing between straps supporting conduit.

Texas Department of Transportation

Traffic Operations Division Standard

ELECTRICAL DETAILS SERVICE NOTES & DATA

ED(5)-14

FILE: ed5-14.dgn	DN: TxDOT	CK: TxDOT	DW: TxDOT	CK: TxDOT
©TxDOT October 2014	CONT	SECT	JOB	HIGHWAY
REVISIONS	XXXX	XX	XXX	XXXX
	DIST	COUNTY		SHEET NO.
	AUS	COUNTY		387

DISCLAIMER:
The use of this standard is governed by the "Texas Engineering Practice Act". No warranty of any kind is made by TxDOT for any purpose whatsoever. TxDOT assumes no responsibility for the conversion of this standard to other formats or for incorrect results or damages resulting from its use.

DATE: 4/4/2023 1:59:16 PM
FILE: G:\TXC\Projects\City_RoundRock\8819-00_WyomingSprings_PSE\03_CADD\01_Sht\ed6_14.dgn

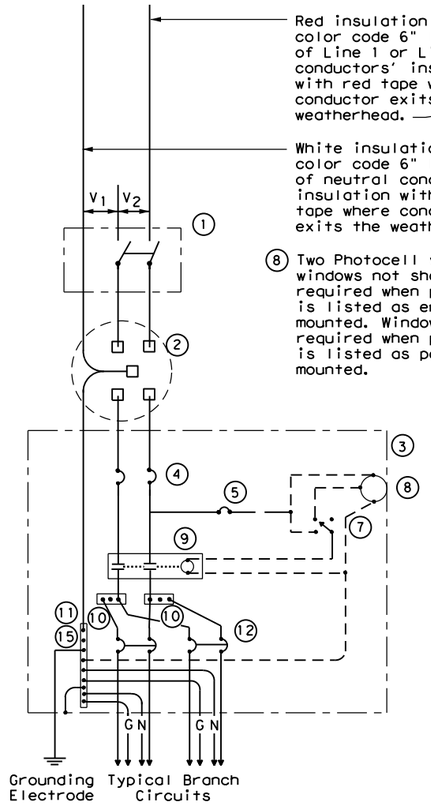

SCHEMATIC TYPE A
THREE WIRE

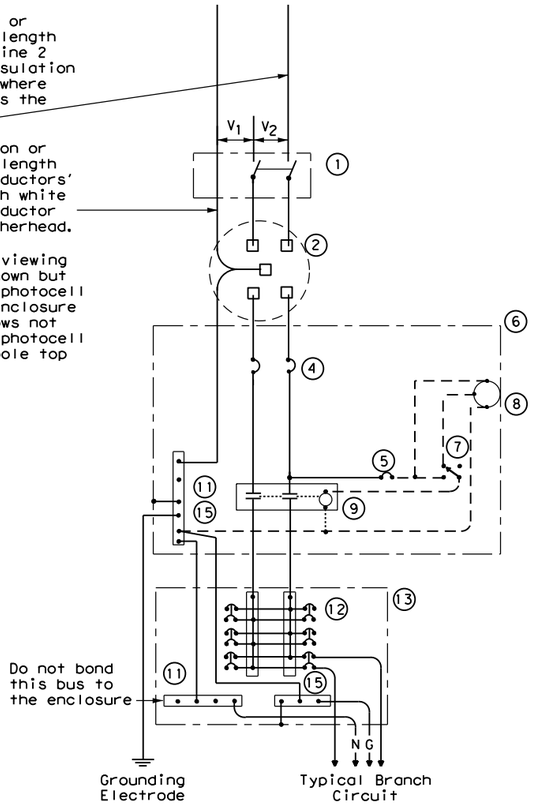

SCHEMATIC TYPE C
THREE WIRE

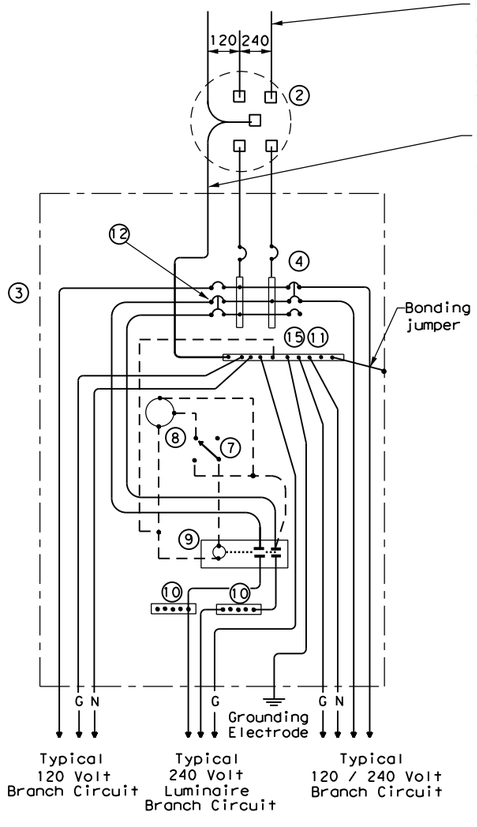

SCHEMATIC TYPE D - CUSTOM
120/240 VOLTS - THREE WIRE

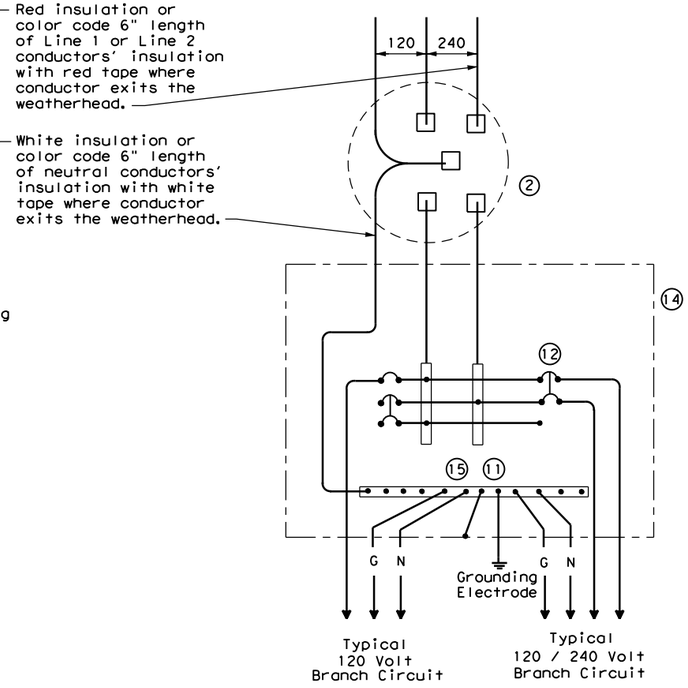

SCHEMATIC TYPE T
120/240 VOLTS - THREE WIRE

Galvanized steel-"Buy Off The Shelf" only. When required install photocell top of the pole or on luminaire only, no lighting contractor will be installed.

WIRING LEGEND	
———	Power Wiring
- - - -	Control Wiring
—N—	Neutral Conductor
—G—	Equipment grounding conductor-always required

SCHEMATIC LEGEND	
1	Safety Switch (when required)
2	Meter (when required-verify with electric utility provider)
3	Service Assembly Enclosure
4	Main Disconnect Breaker (See Electrical Service Data)
5	Circuit Breaker, 15 Amp (Control Circuit)
6	Auxiliary Enclosure
7	Control Station ("H-O-A" Switch)
8	Photo Electric Control (enclosure-mounted shown)
9	Lighting Contactor
10	Power Distribution Terminal Blocks
11	Neutral Bus
12	Branch Circuit Breaker (See Electrical Service Data)
13	Separate Circuit Breaker Panelboard
14	Load Center
15	Ground Bus

Texas Department of Transportation

Traffic Operations Division Standard

ELECTRICAL DETAILS SERVICE ENCLOSURE AND NOTES

ED(6)-14

FILE: ed6-14.dgn	DN: TxDOT	CK: TxDOT	DW: TxDOT	CK: TxDOT
©TxDOT October 2014	CONT	SECT	JOB	HIGHWAY
REVISIONS	XXXX	XX	XXX	XXXX
	DIST	COUNTY		SHEET NO.
	AUS	COUNTY		388

71F

DISCLAIMER:
The use of this standard is governed by the "Texas Engineering Practice Act". No warranty of any kind is made by TxDOT for any purpose whatsoever. TxDOT assumes no responsibility for the conversion of this standard to other formats or for incorrect results or damages resulting from its use.

DATE: 4/4/2023 1:59:17 PM
FILE: G:\TXC\Projects\City_RoundRock\8819-00_WyomingSprings_PSE\03_CADD\01_Shts\8819-00_WyomingSprings_PSE_ED7_14.dgn

SUPPORT TYPE STEEL POLE (SP) AND STEEL FRAME (SF)

1. Provide steel pole and steel frame supports as per TxDOT Departmental Material Specification (DMS)11080 "Electrical Services." Mount all equipment and conduit on 12 gauge galvanized steel or stainless steel channel strut, 1 ½ in. or 1 ⅝ in. wide by 1 in. up to 3 ¾ in. deep Unistrut, Kindorf, B-line or equal. Bolt or weld all channel and hardware to vertical members as approved. Do not stack channel. File smooth and paint field cut ends of all channel with zinc-rich paint before installing.

2. Provide poles for overhead service with an eyebolt or similar fitting for attachment of the service drop to the pole in conformance with the electric utility provider's specifications.

3. Provide and install galvanized ¾ in. x 18 in. x 4 in. (dia. x length x hook length) anchor bolts for underground service supports. Provide and install galvanized ¾ in. x 56 in. x 4 in. anchor bolts for overhead service supports. Ensure anchor bolts have 3 in of thread, with 3 ¼ in. to 3 ½ in. of the exposed anchor bolt projecting above finished foundation. Provide and install leveling nuts for all anchor bolts.

4. Bond one of the anchor bolts to the rebar cage with 6 AWG bare stranded copper conductor. Use listed mechanical connectors rated for embedment in concrete. See Inset B.

5. Furnish and install rigid metallic ells in all steel pole and steel frame foundations for all conduits entering the service from underground.

6. Use class C concrete for foundations. Ensure reinforcing steel is Grade 60 with 3" of unobstructed concrete cover.

7. Drill and tap steel poles and frames for ½ in. X 13 UNC tank ground fitting. For steel pole service supports, provide and install tank ground fitting 4 in. to 6 in. below electrical service enclosure. Provide properly sized hole through the bottom of the enclosure for the service grounding electrode conductor. Ensure electrical service grounding electrode conductor is as short and straight as possible from the enclosure to the tank ground fitting. For steel frame service supports, provide and install tank ground fitting on steel frame post. Install service grounding electrode conductor in a non-metallic conduit or tubing from the enclosure to the steel frame post. Connect electrical service grounding electrode conductor to the tank ground fitting. See steel frame and steel pole details and Inset A for more information. Size service entrance conduit and branch circuit conduit as shown in the plans. For underground conduit runs from the electrical service, extend RMC from the service enclosure to an RMC elbow, and then connect the schedule type and size of conduit shown in the plans. Provide and install grounding bushings where RMC terminates in the enclosure. Grounding bushings are not required when RMC is fitted into a sealing hub or threaded boss.

8. If Steel pole or frame is painted, bond each separate painted piece with a bonding jumper attached to a tapped hole.

9. Provide ¼" - 20 machine screws for bonding. Do not use sheet metal screws. Remove all non-conductive material at contact points. Terminate bonding jumpers with listed devices. Install minimum size 6 AWG stranded copper bonding jumpers. Make up all threaded bonding connections wrench tight.

10. Avoid contact of the service drop and service entrance conductors with the metal pole to prevent abrasion of the insulated conductors.

11. Shop drawings are not required for service support structure unless specifically stated elsewhere or directed by the Engineer.

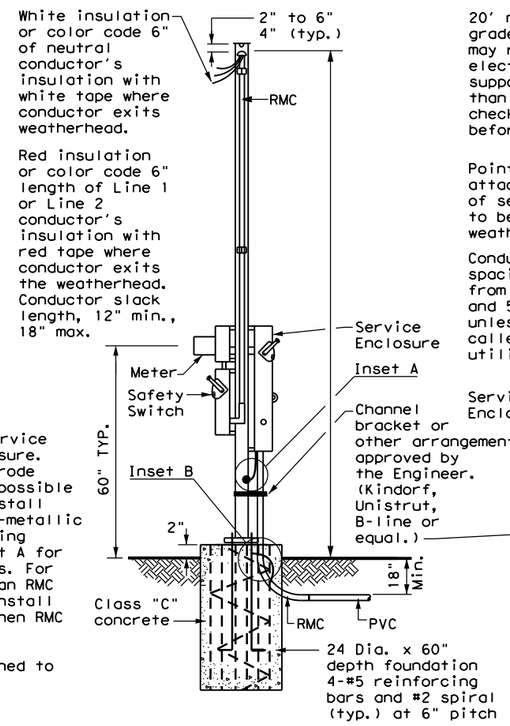

WITH SAFETY SWITCH

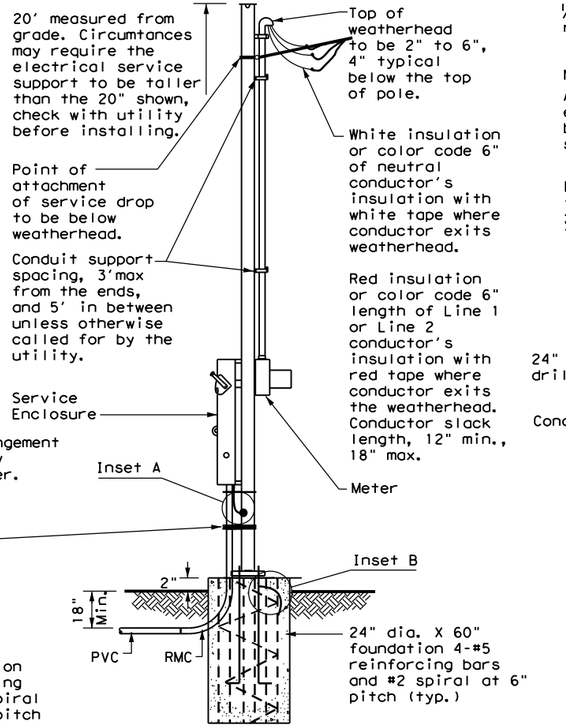

WITHOUT SAFETY SWITCH

SERVICE SUPPORT TYPE SP (O) - OVERHEAD SERVICE

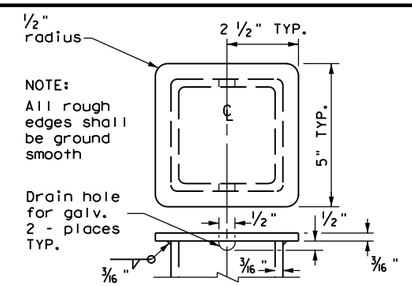

POLE TOP PLATE

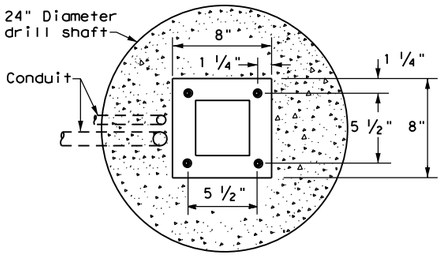

BASE PLATE DETAIL

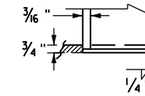

BOTTOM OF POLE

SERVICE SUPPORT TYPE SF & SP

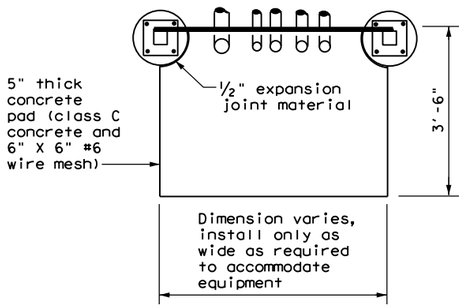

TOP VIEW

SERVICE SUPPORT TY SF (O) & SF (U)

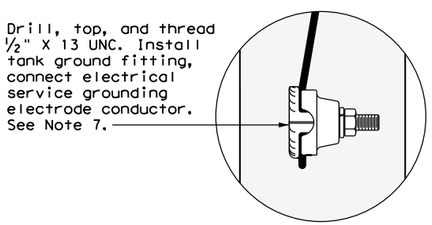

FRONT VIEW

INSET A

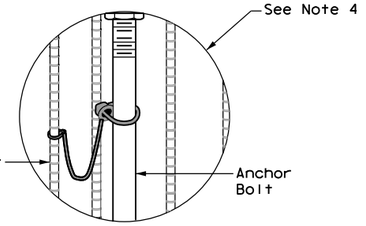

INSET B

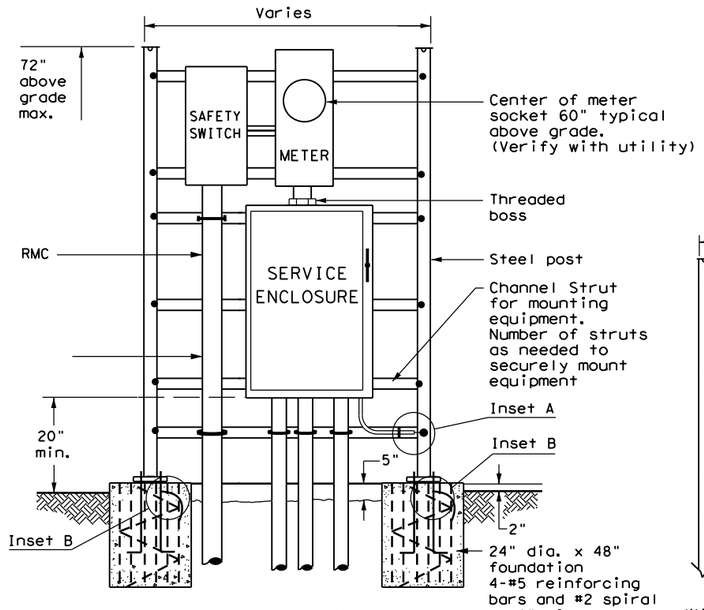

WITH SAFETY SWITCH
FRONT VIEW

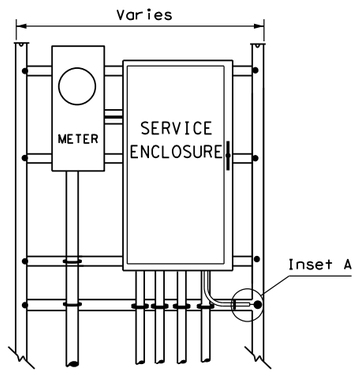

WITHOUT SAFETY SWITCH

SERVICE SUPPORT TYPE SF(U) - UNDERGROUND SERVICE

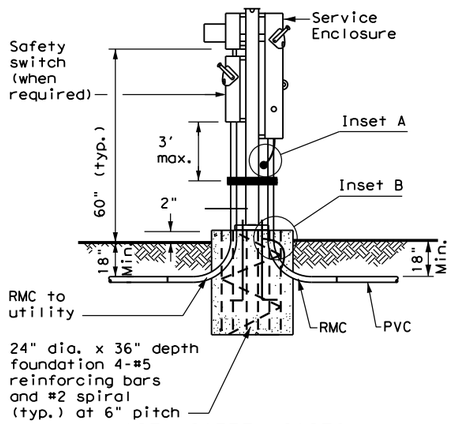

WITH SAFETY SWITCH

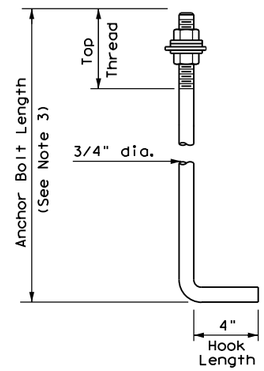

HOOKED ANCHOR DETAIL

SERVICE SUPPORT TYPE SP(U) - UNDERGROUND SERVICE

Texas Department of Transportation

Traffic Operations Division Standard

ELECTRICAL DETAILS SERVICE SUPPORT TYPES SF & SP

ED(7)-14

FILE: ed7-14.dgn	DN: TxDOT	CK: TxDOT	DW: TxDOT	CK: TxDOT
© TxDOT October 2014	CONT	SECT	JOB	HIGHWAY
REVISIONS	XXXX	XX	XXX	XXXX
	DIST	COUNTY		SHEET NO.
	AUS	COUNTY		389

71G

TRAFFIC SIGNAL NOTES

1. Do not pass luminaire conductors through the signal controller cabinet.
2. Include an equipment grounding conductor in all conduits throughout the electrical system. Bond all exposed metal parts to the grounding conductor.
3. Provide roadway luminaires, when required, in accordance with the material and construction sections of Item 610, "Roadway Illumination Assemblies," except for performance testing of luminaires. Test installed roadway luminaires for proper operation as a part of the associated traffic signal system test.
4. If internally illuminated street name signs are approved for use, ground the fixture to the pole with a 12 AWG green XHHW conductor.
5. Bond anchor bolts to rebar cage in two locations using #3 bars or 6 AWG stranded copper conductors. Use listed mechanical connectors rated for embedment in concrete. See TXDOT standard TS-FD for further details.
6. Drill and tap signal poles for ½ in. X 13 UNC tank ground fitting. Provide and install tank ground fitting 4 in. to 6 in. directly below electrical service enclosure. Provide properly sized hole through the bottom of the enclosure for the service grounding electrode conductor. Connect the electrical service grounding electrode conductor to the tank ground fitting. Ensure electrical service grounding electrode conductor is as short and straight as possible from the enclosure to the tank ground fitting. See Inset A detail for further information. Size service entrance conduit and branch circuit conduit as shown in the plans.
7. Mount electrical service enclosure and meter to signal pole with stainless steel bands. Ensure bands are a minimum width of ¾ in. Secure enclosures to bands using two-bolt brackets. Install brackets near top and bottom of each enclosure. Install properly sized stainless steel washers on each bolt in the enclosure. Band or drill and tap properly sized stand-off straps to signal pole for attaching conduit.
8. Conduct pull tests and insulation resistance tests on all illumination and power conductors as required in Item 620 "Electrical Conductors" and ED(3). To prevent electronics damage, do not conduct insulation resistance tests on traffic signal cables after termination.
9. Lock all enclosures and bolt down all ground box covers before applying power to the signal installation.
10. Terminate conduits entering the top of enclosures with a conduit-sealing hub or threaded boss such as meter hub. Install a grounding bushing on all metal conduits not connected to conduit-sealing hub or threaded boss. Bond the grounding bushing to the ground bus with a bonding jumper. Seal all conduits entering enclosures with duct seal or expanding foam. Do not use silicone to seal conduit ends.
11. For all conduits, ensure the burial depth is a minimum of 18". Ensure the minimum burial depth for conduit placed under a roadway is 24".

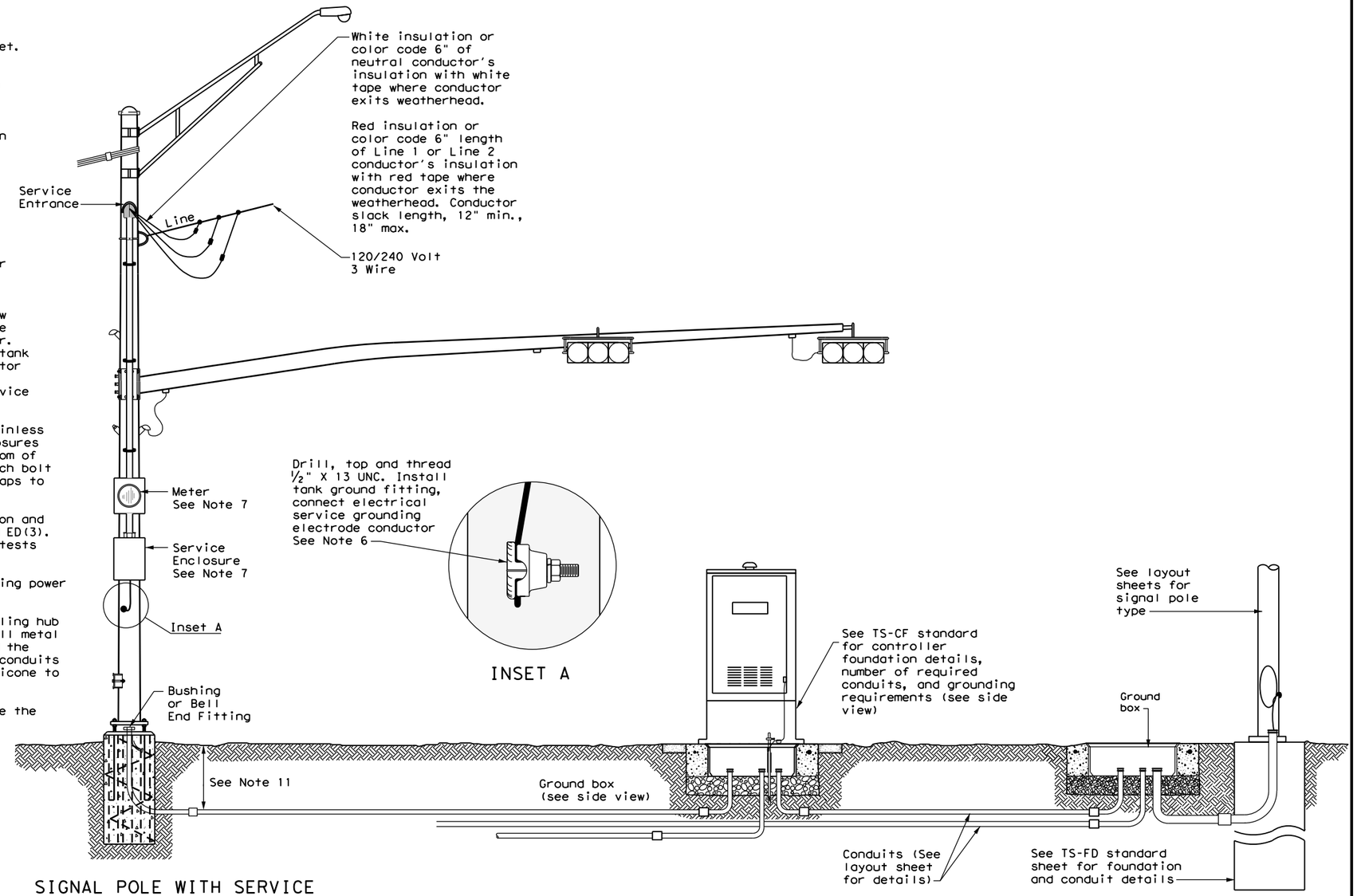

SIGNAL POLE WITH SERVICE

Type T electrical service mounted on signal pole shown as an example. See electrical details, layout sheets, and electrical service data chart for additional details.

SIGNAL CONTROLLER FRONT VIEW

SIGNAL POLE

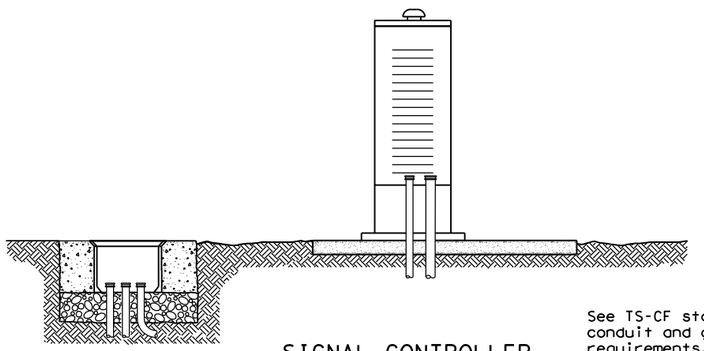

SIGNAL CONTROLLER SIDE VIEW

See TS-CF standard for conduit and grounding requirements. See layout sheets for ground box locations and any additional conduits that are required.

Texas Department of Transportation

Traffic Operations Division Standard

ELECTRICAL DETAILS TYPICAL TRAFFIC SIGNAL SYSTEM DETAILS

ED(8)-14

FILE: ed8-14.dgn	DN: TxDOT	CK: TxDOT	DW: TxDOT	CK: TxDOT
© TxDOT October 2014	CONT	SECT	JOB	HIGHWAY
REVISIONS	XXXX	XX	XXX	XXXX
	DIST		COUNTY	SHEET NO.
	AUS		COUNTY	390

71H

DISCLAIMER:
The use of this standard is governed by the "Texas Engineering Practice Act". No warranty of any kind is made by TxDOT for any purpose whatsoever. TxDOT assumes no responsibility for the conversion of this standard to other formats or for incorrect results or damages resulting from its use.

DATE: 4/4/2023 1:59:18 PM
FILE: G:\TXC\Projects\City_RoundRock\8819-00_WyomingSprings_PSE\03_CADD\01_Sht\3_SIGNALS\ED(8)-14.dgn

DISCLAIMER:
The use of this standard is governed by the "Texas Engineering Practice Act". No warranty of any kind is made by TxDOT for any purpose whatsoever. TxDOT assumes no responsibility for the conversion of this standard to other formats or for incorrect results or damages resulting from its use.

DATE: 4/4/2023 1:59:19 PM
FILE: G:\TXC\Projects\City_RoundRock\8819-00_WyomingSprings_PSE\03_CADD\01_Sht\ed9-14_8819_3-5GMES4SP0g4.dgn

PEDESTAL SERVICE NOTES

1. Manufacture pedestal electrical services in accordance with Departmental Material Specifications (DMS)11080 "Electrical Services", 11085 "Electrical Services-Pedestal (PS)" and Item 628 "Electrical Services. "Provide pedestal electrical services as listed on the Material Producers list (MPL) on the Department's web site under "Roadway Illumination and Electrical Supplies," Item 628. Ensure all mounting hardware and installation details of services meet utility company specifications. Contact the local utility company for approval of pedestal details prior to installing the electrical pedestal service. Submit any changes required by the utility company prior to manufacturing the pedestal enclosure.

2. When a meter socket is required, provide a socket with a minimum 100 amp rating that complies with local utility requirements.

3. Provide Class A or C concrete for pedestal service foundations in accordance with Item 420, "Concrete Substructures," except that concrete will not be paid for directly but is considered subsidiary to Item 628.

4. Provide #4 reinforcing steel for foundations in accordance with Item 440, "Reinforcement for Concrete."

5. Install ½ in. X 2 ⅛ in. minimum length concrete single expansion type anchors for mounting pedestal enclosure to foundation. Anchor location to match mounting holes in each corner of enclosure. Secure each of the four corners of the pedestal enclosure to the anchors in the foundation with a ½ in. galvanized or stainless steel machine thread bolt, a properly sized locknut and a flat washer.

6. Finish top of concrete foundation in a neat and workmanlike manner. If leveling washers are used, ensure no more than ⅛ in. gap at any corner. Do not exceed a maximum dip or rise in the foundation of ⅛ in. per foot. When properly installed, ensure the top of the service enclosure is level front to back and side to side within ¼ in. Repair rocking or movement of the service enclosure at no additional cost to the department.

7. Do not use liquidtight flexible metal conduit (LFMC) on pedestal type services.

8. Ensure all elbows in the foundation are sized as per utility provider's conduit requirements for underground conduit and feeders. PVC extensions may be installed provided the ends of the rigid metal conduits are more than 2 in. below the top of the concrete foundation. Where extension conduits are metal, grounding bushings must be installed with a bonding jumper properly terminated.

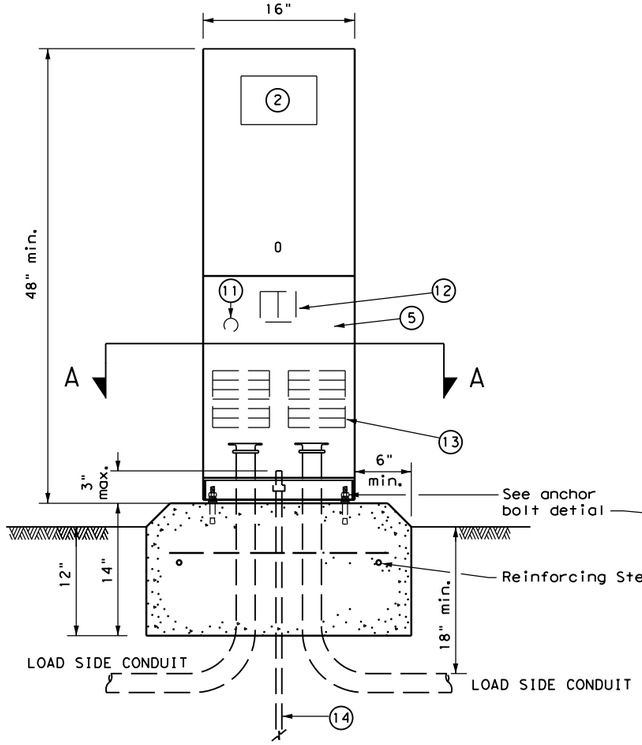

FRONT VIEW

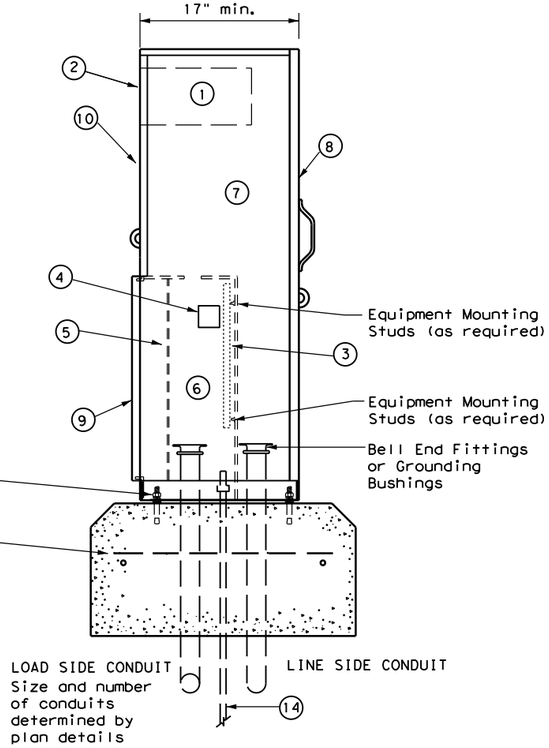

SIDE VIEW

TYPE C shown, TYPE A similar except that TYPE A shall have individual circuit breakers (CB) mounted on an equipment mounting panel. CB Handles shall protrude through hinged deadfront trim.

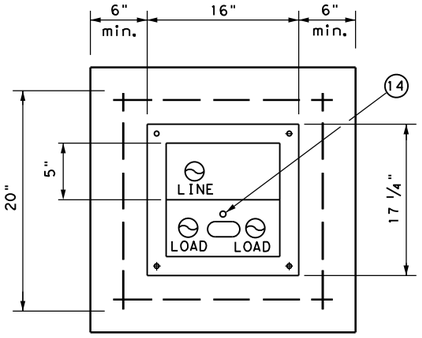

SECTION A-A

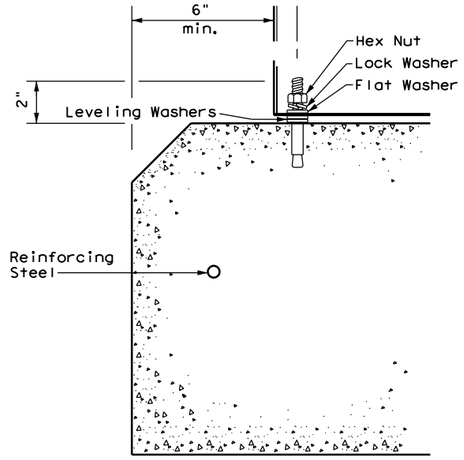

ANCHOR BOLT DETAIL

LEGEND	
1	Meter Socket, (when required)
2	Meter Socket Window, (when required)
3	Equipment Mounting Panel
4	Photo Electric Control Window, (When required)
5	Hinged Deadfront Trim
6	Load Side Conduit Trim
7	Line Side Conduit Area
8	Utility Access Door, with handle
9	Pedestal Door
10	Hinged Meter Access
11	Control Station (H-O-A Switch)
12	Main Disconnect
13	Branch Circuit Breakers
14	Copper Clad Ground Rod - 5/8" X 10'

Texas Department of Transportation

Traffic Operations Division Standard

ELECTRICAL DETAILS
ELECTRICAL SERVICE SUPPORT
PEDESTAL SERVICE TYPE PS

ED(9)-14

FILE: ed9-14.dgn	DN: TxDOT	CK: TxDOT	DW: TxDOT	CK: TxDOT
©TxDOT October 2014	CONT	SECT	JOB	HIGHWAY
REVISIONS	XXXX	XX	XXX	XXXX
	DIST	COUNTY		SHEET NO.
	AUS	COUNTY		391

71J

DISCLAIMER:
The use of this standard is governed by the "Texas Engineering Practice Act". No warranty of any kind is made by TxDOT for any purpose whatsoever. TxDOT assumes no responsibility for the conversion of this standard to other formats or for incorrect results or damages resulting from its use.

DATE: 4/4/2023 1:59:21 PM
FILE: G:\TXC\Projects\City_RoundRock\8819-00_WyomingSprings_PSE\03_CADD\01_Sheets\8819-00_WyomingSprings_PSE_ED10-14.dgn

TIMBER POLE (TP) SERVICE SUPPORT NOTES

1. Ensure electrical service support is a class 5 treated timber pole as per Item 627 "Treated Timber Poles." Embed timber pole to depth required in Item 627.
2. Conduit and electrical conductors attached to the electrical service pole and underground within 12 in. of service pole are not paid for directly but are subsidiary to the electrial service.
3. Install pole-top mounted photocell (T) on north side of pole, or in service enclosure (E) as required. See Electrical Service Data chart in plan set.
4. Gain pole as required to provide flat surface for each channel. Gain timber pole to 5/8 in. max. depth and 1 7/8 in. max. height. Gain pole in a neat and workmanlike manner.
5. Mount meter and service equipment on stainless steel or galvanized channel (Unistrut, Kindorf, or equal). Provide channel sized 1 in. to 3 3/4 in. maximum depth, and 1 1/2 in. to 1 5/8 in. maximum width. File smooth the cut ends of galvanized channel and paint with zinc rich paint before installing on pole. Secure each channel section to timber pole with two galvanized or SS lag bolts, 1/4 in. minimum diameter by 1 1/2 in. minimum length. Use a galvanized or SS flat washer on each lag bolt. Do not stack channel.
6. When excess length must be trimmed from poles, trim from the top end only.

(1) Class 5 pole, height as required

(2) Service drop from utility company (attached below weatherhead)

(3) Service conduit (RMC) and service entrance conductors - One Red, One Black, One White (See Electrical Service Data)

(4) Safety switch (when required)

(5) Meter (when required)

(6) Service enclosure

(7) 6 AWG bare grounding electrode conductor in 1/2 in. PVC to ground rod - extend 1/2 in. PVC 6 in. underground.

(8) 5/8 in. x 8 ft. Copper clad ground rod - drive ground rod to a depth of 2 in. to 4 in. below grade.

(9) RMC same size as branch circuit conduit.

(10) See pole-top mounted photocell detail on ED(5).

(11) When required by the serving utility provide bare 6 AWG copper conductor. Run wire from pole top to butt wrap or copper butt plate. Protect conductor with non-conductive material to a height of 8 ft. above finished grade.

(12) When required by utility, cut top of pole at an angle to enhance rain run off.

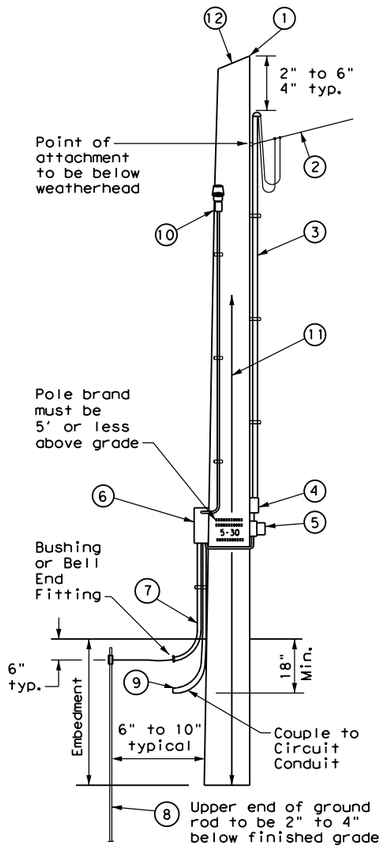

SERVICE SUPPORT TYPE TP (O)

GRANITE CONCRETE (GC) & OTHER CONCRETE (OC) NOTES

Ensure electrical service support structures bid as type Granite Concrete (GC) or Other Concrete (OC) meet the following requirements.

1. Provide GC and OC poles that meet the requirements of DMS 11080 "Electrical Services."
2. Provide prestressed concrete poles suitable for direct embedment into the ground without special foundations.
3. Verify poles are marked as required on DMS 11080. Location of marking should be approximately 4' above final grade. Use the two-point pickup locations when handling pole in horizontal position, and one-point pickup location for use in raising the pole to a vertical position. These marks are small but conspicuous.
4. Embed poles 42 in. or 10% of the length plus 2 ft., whichever is greater.
5. Ensure all installation details of services are in accordance with utility company specifications.
6. Install a one point rack or eye bolt bracket 6 inches to 12 inches below the weatherhead as an overhead service drop anchoring point for the electric utility.
7. Furnish and install galvanized or stainless steel channel strut 1 1/2 in. or 1 5/8 in. wide by 1 in. up to 3 3/4 in. deep (Unistrut, Kindorf, B-line or equal). Attach channel strut with stainless steel concrete anchors (max. 1" depth), square U-bolts or back to back channel strut with long bolts, or other secure mounting as approved by the Engineer. Ensure bolts are galvanized in accordance with ASTM A153. Do not stack channel struts.
8. Backfill the holes thoroughly by tamping in 6 in. lifts. After tamping to grade, place additional backfill material in a 6 inch high cone around the pole to allow for settling. Use material equal in composition and density to the surrounding area. Backfilling will not be paid for directly but is subsidiary to various bid items.

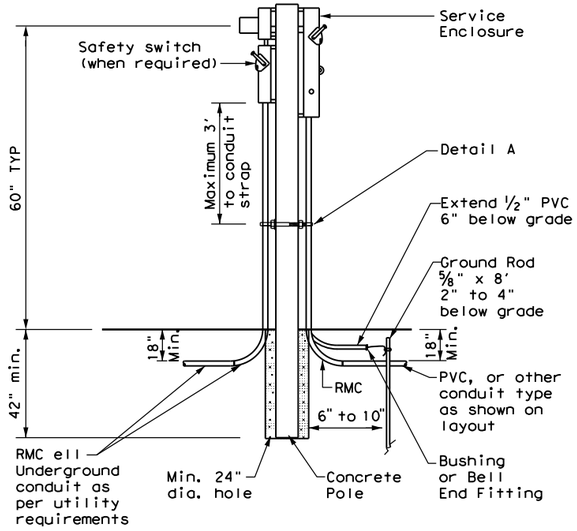

CONCRETE SERVICE SUPPORT
Underground (U)

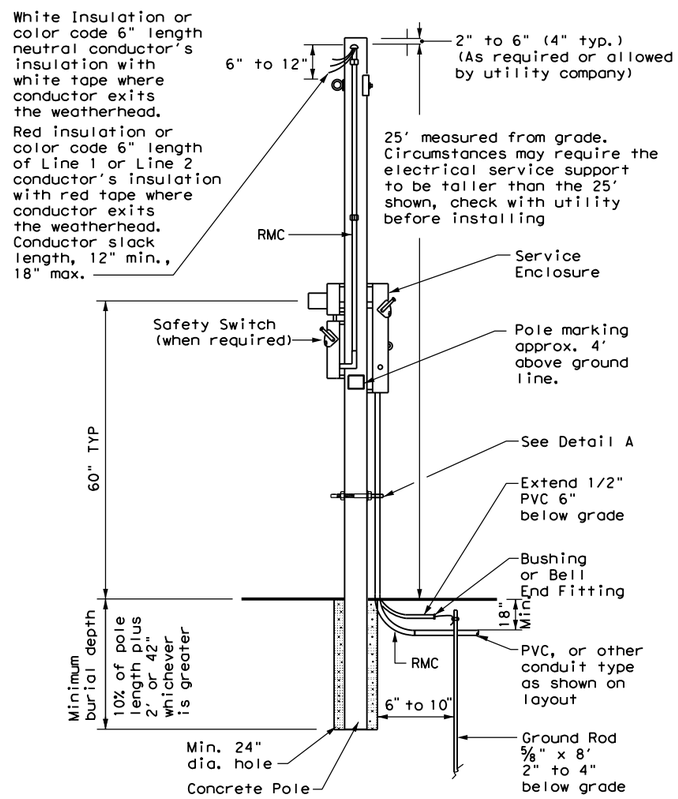

CONCRETE SERVICE SUPPORT
Overhead (O)

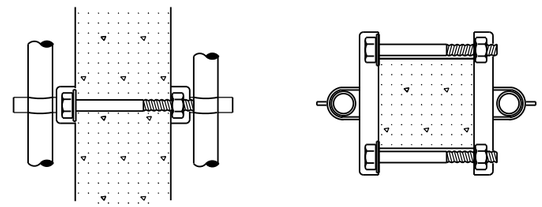

DETAIL A

See Note 7. Before installing channel that has been cut, file sharp edges and paint with zinc-rich paint. Ensure there is no paint splatter on the pole.

Texas Department of Transportation

Traffic Operations Division Standard

ELECTRICAL DETAILS SERVICE SUPPORT TYPES GC, OC, & TP

ED(10)-14

FILE: ed10-14.dgn	DN: TxDOT	CK: TxDOT	DW: TxDOT	CK: TxDOT
© TxDOT October 2014	CONT	SECT	JOB	HIGHWAY
REVISIONS	XXXX	XX	XXX	XXXX
	DIST	COUNTY		SHEET NO.
	AUS	COUNTY		392

71K

DUCT CABLE & HDPE CONDUIT NOTES

1. Provide duct cable in accordance with Departmental Material Specification (DMS) 11060 "Duct Cable" and Item 622 "Duct Cable." Provide duct cable as listed on the Material Producer List (MPL) on the Department web site under "Roadway Illumination and Electrical Supplies" Item 622.

2. Provide High-Density Polyethylene (HDPE) conduit in accordance with DMS 11060 and Item 618, "Conduit." Provide HDPE as listed on the MPL on the Department web site under "Roadway Illumination and Electrical Supplies," Item 618.

3. Supply duct cable with a minimum 2 in. diameter, unless otherwise shown in the plans. Provide duct cable and HDPE conduit as shown by descriptive code or on the plans. Bend duct cable and HDPE conduit as recommended by the manufacturer, with a minimum bending radius of 26 in. for 2 in. duct. Follow manufacturers' recommendations when handling duct cable and HDPE conduit reels and during installation of duct cable and HDPE conduit.

4. Do not splice conductors within duct cable or HDPE conduit. Couple duct cable and HDPE entering a ground box or foundation to a PVC elbow. When galvanized steel RMC elbows are called for in the plans and any portion of the RMC elbow is buried less than 18" from possible contact, ground the RMC elbow.

5. Furnish and install duct cable with factory installed conductors, sized as shown in the plans and as required by the National Electrical Code (NEC). The NEC contains specific requirements for duct cable in Article, "Nonmetallic Underground Conduit with Conductors: Type NUCC."

6. When conduit casing is called for in the plans, extend duct cable or HDPE conduit through the conduit casing in one continuous length without connection to the casing.

7. Seal the ends of duct cable or HDPE conduit with duct seal, expandable foam, or other approved method after completing the pull tests required by Item 622.

8. Provide minimum cover of 24 in. under roadways, 18 in. in other locations, or as shown on the plans.

9. Furnish and install listed fittings to couple duct cable or HDPE conduit to other types of conduit. Duct cable and HDPE conduit may be field-threaded and spliced with PVC or RMC threaded couplings; connected with listed tie-wrap fittings; connected using listed coupling made of HDPE with stainless steel external banding clamps and locking rings; connected with approved electrofusion conduit couplings; or connected using an approved chemical fusion method using an epoxy or adhesive specifically designed for HDPE couplings and connectors all installed in accordance with their manufacturer's instructions. Do not use PVC glue on HDPE. Do not use water pipe fittings, or connect conduit with heat shrink tubing.

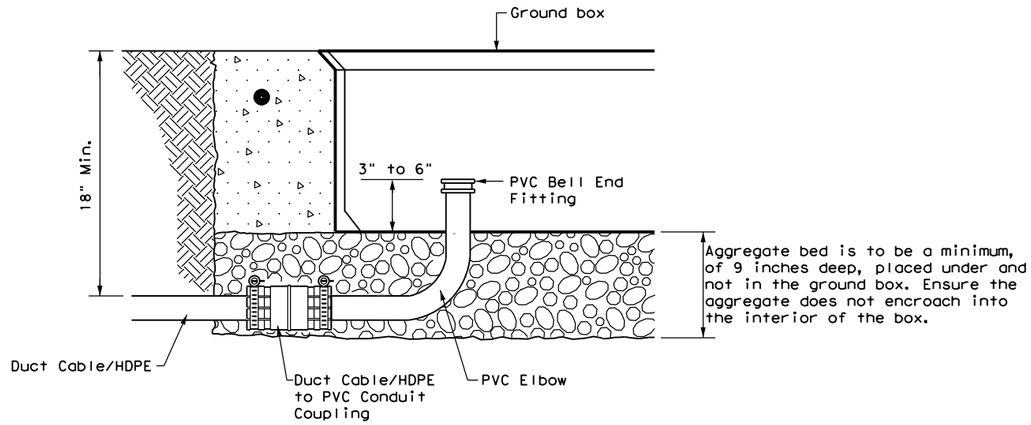

DUCT CABLE/HDPE AT GROUND BOX

When the upper end of an RMC Ell does not enter the ground box, it may be extended with a SCH-40 PVC conduit nipple and bell end, provided there is a minimum of 18" of cover over all parts of the elbow. If not, a rigid extension and ground bushing is required.

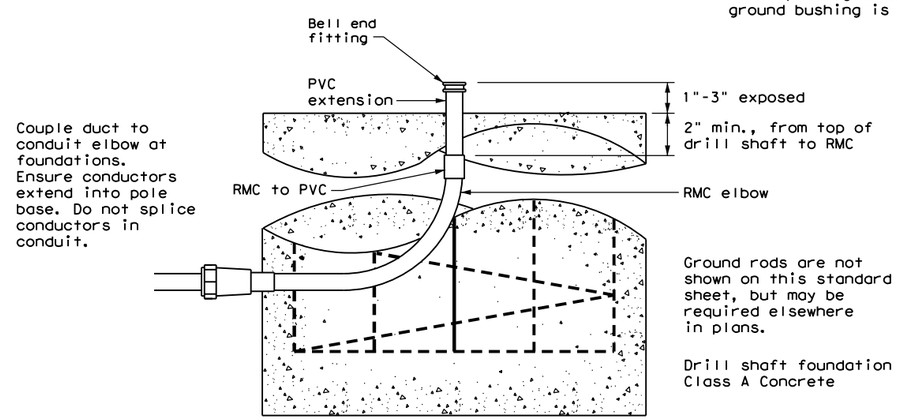

DUCT CABLE / HDPE AT FOUNDATION

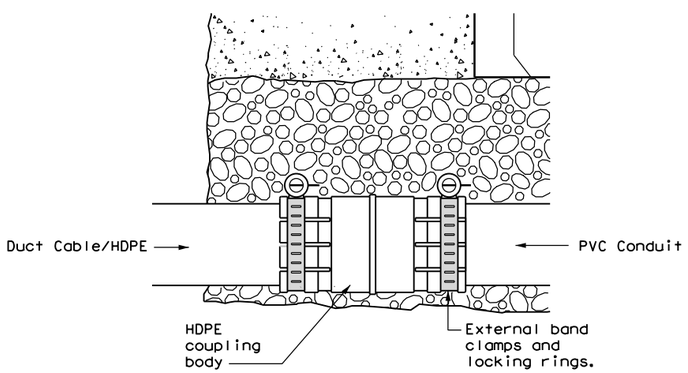

DUCT CABLE/HDPE TO PVC

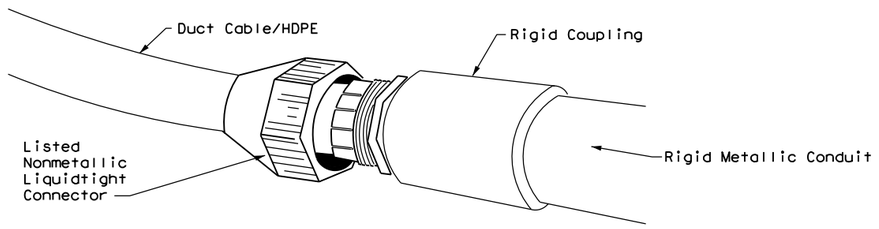

DUCT CABLE/HDPE TO RMC

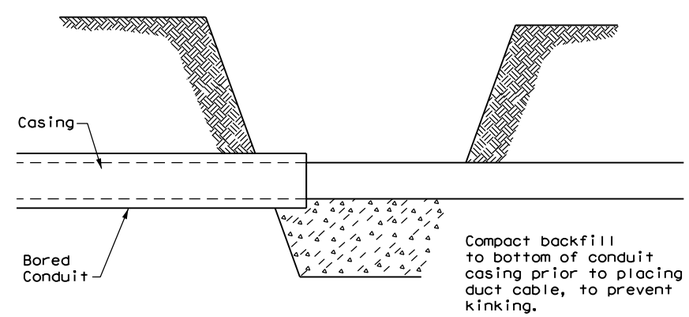

BORE PIT DETAIL

Texas Department of Transportation

Traffic Operations Division Standard

ELECTRICAL DETAILS DUCT CABLE/ HDPE CONDUIT

ED(11)-14

FILE: ed11-14.dgn	DN: TxDOT	CK: TxDOT	DW: TxDOT	CK: TxDOT
© TxDOT October 2014	CONT	SECT	JOB	HIGHWAY
REVISIONS	XXXX	XX	XXX	XXXX
	DIST		COUNTY	SHEET NO.
	AUS		COUNTY	393

71L

DISCLAIMER:
The use of this standard is governed by the "Texas Engineering Practice Act". No warranty of any kind is made by TxDOT for any purpose whatsoever. TxDOT assumes no responsibility for the conversion of this standard to other formats or for incorrect results or damages resulting from its use.

DATE: 4/4/2023 1:59:22 PM
FILE: G:\TXC\Projects\City_RoundRock\8819-00_WyomingSprings_PSE\03_CADD\01_Sht\13_SGNESS\SGNDET_ED11-14.dgn

BATTERY BOX GROUND BOXES NOTES

A. MATERIALS

1. Provide polymer concrete or fiberglass reinforced plastic (FRP) battery box ground box and cover in accordance with Departmental Material Specification (DMS) 11071 "Battery Box Ground Boxes." Battery box will accommodate up to 4 batteries, each measuring 8 in. x 13.5 in. x 10 in. (W x L x D). Label battery box ground box cover in accordance with DMS 11071.

2. Supply a marine grade batteries with covers. Secure the marine grade batteries with covers to the stainless steel rack in the bottom of the ground box with tie down straps.

B. CONSTRUCTION METHODS

1. Ensure conduit entry will not interfere with placement of the batteries in the battery box ground box.

2. Remove all gravel and dirt from conduit. Cap all conduits prior to placing aggregate and setting battery box ground box. Provide Grade 3 or 4 coarse aggregate as shown on Table 2 of Item 302 "Aggregates for Surface Treatments." Ensure the aggregate bed is in place and is a minimum of 9 in. deep prior to setting the box. Install battery box ground box on top of aggregate.

3. Cast battery box aprons in place. Reinforcing steel may be field bent. Ensure the depth of concrete for the apron extends from finished grade to the top of the aggregate bed under the box. Battery box ground box aprons, including concrete and reinforcing steel, are subsidiary to battery box ground boxes when called for by descriptive code.

4. Bolt covers down when not working in battery box ground boxes. Keep bolt holes in the box clear of dirt.

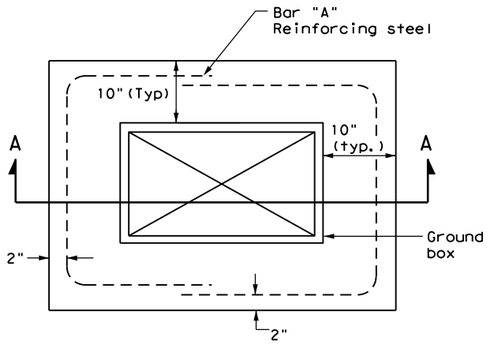

PLAN VIEW

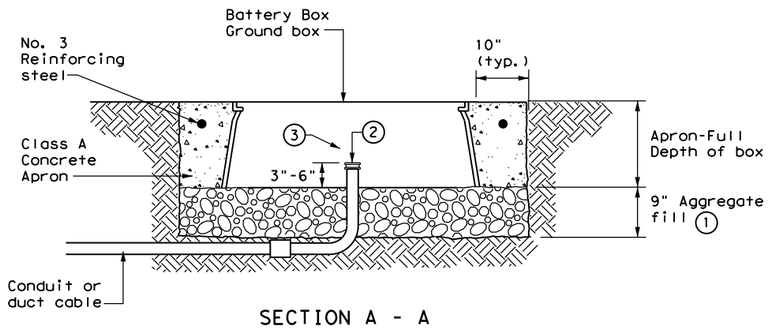

SECTION A - A

APRON FOR BATTERY BOX GROUND BOXES

1. Place aggregate under the box and not in the box. Aggregate should not encroach on the interior volume of the box.

2. Install bushing or bell end fitting on the upper end of all ells.

3. Install all conduits in a neat and workmanlike manner.

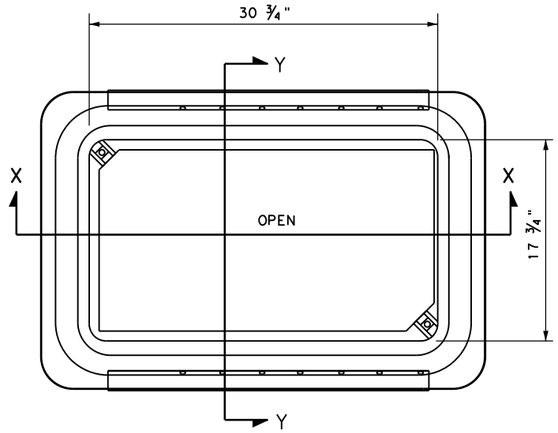

BATTERY BOX TOP VIEW

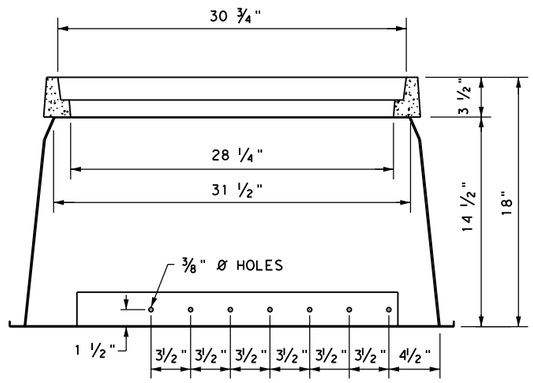

SECTION X-X

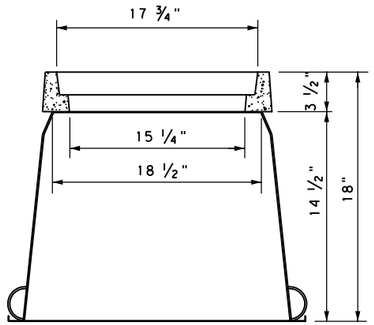

SECTION Y-Y

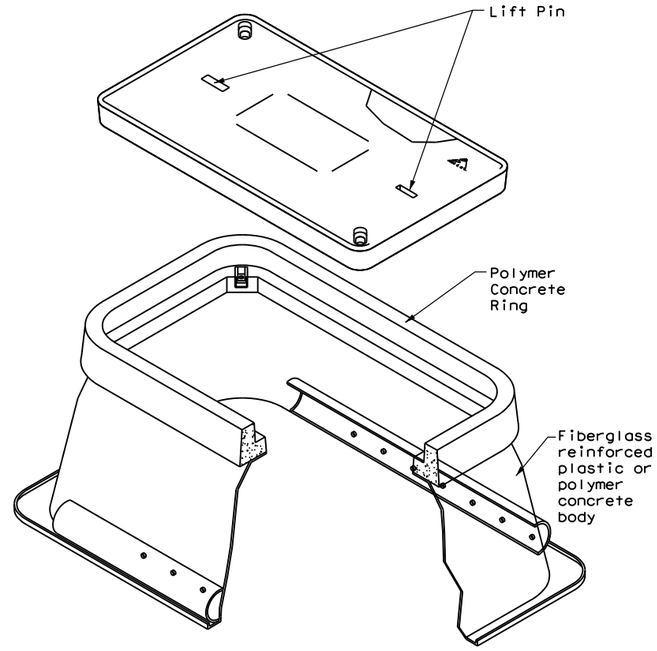

Texas Department of Transportation

Traffic Operations Division Standard

ELECTRICAL DETAILS BATTERY BOX GROUND BOXES

ED(12)-14

FILE: ed12-14.dgn	DN: TxDOT	CK: TxDOT	DW: TxDOT	CK: TxDOT
© TxDOT October 2014	CONT	SECT	JOB	HIGHWAY
REVISIONS	XXXX	XX	XXX	XXXX
	DIST		COUNTY	SHEET NO.
	AUS		COUNTY	394

71M

DISCLAIMER:
The use of this standard is governed by the "Texas Engineering Practice Act". No warranty of any kind is made by TxDOT for any purpose whatsoever. TxDOT assumes no responsibility for the conversion of this standard to other formats or for incorrect results or damages resulting from its use.

DATE: 4/4/2023 1:59:29 PM
FILE: G:\TXC\Projects\City_RoundRock\8819-00_WyomingSprings_PSE\03_CADD\01_Sht\13_SGNESS\Standard_Sheet_Edit_Page

DISCLAIMER: The use of this standard is governed by the "Texas Engineering Practice Act". No warranty of any kind is made by TxDOT for any purpose whatsoever. TxDOT assumes no responsibility for the conversion of this standard to other formats or for incorrect results or damages resulting from its use.

DATE: 4/4/2023 1:59:30 PM
FILE: G:\TXC\Projects\City*RoundRock\8819-00*WyomingSprings*PSE\03*CADD\01*Shts\13-SGNLS\Stds\082*sns-95.dgn

INTERNALLY LIGHTED STREET NAME SIGN DETAILS

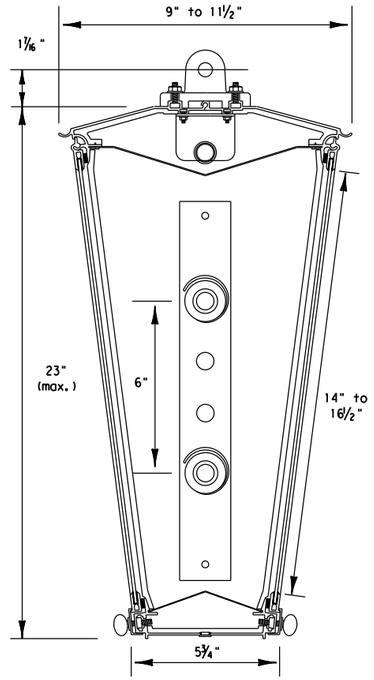

Section A-A

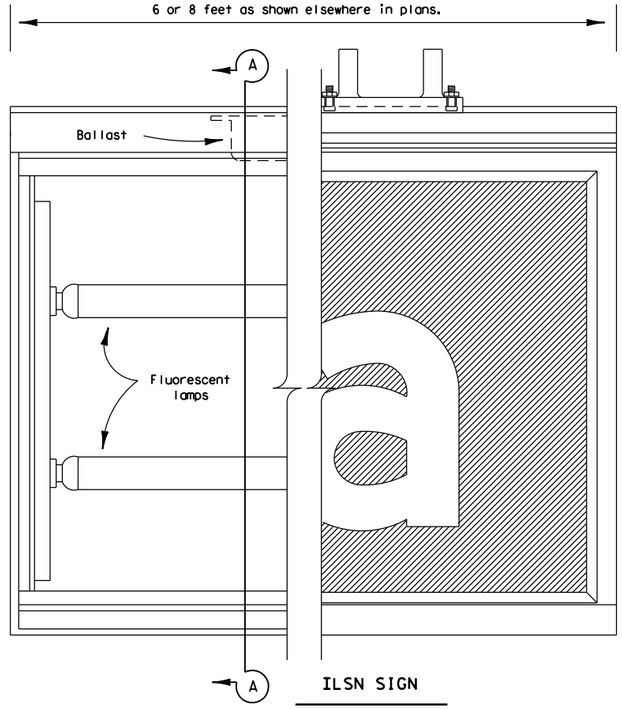

ILSN SIGN

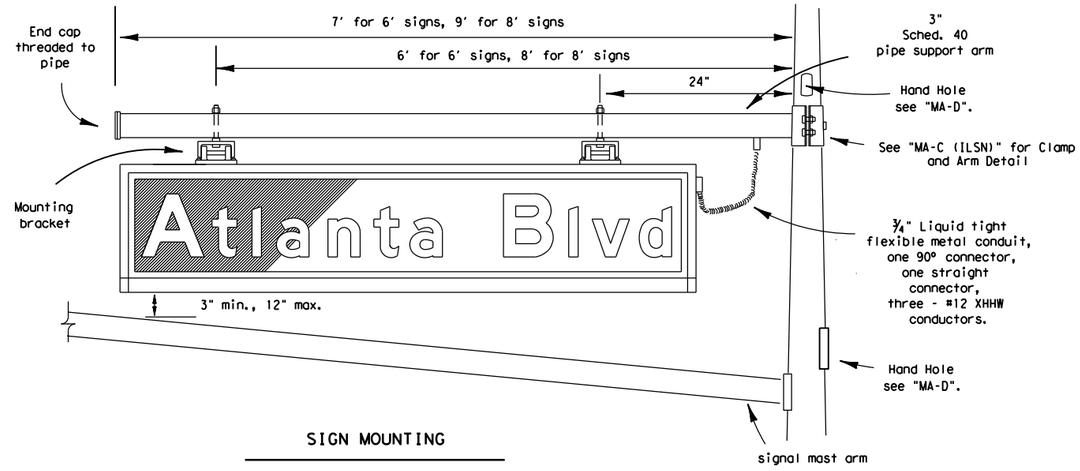

SIGN MOUNTING

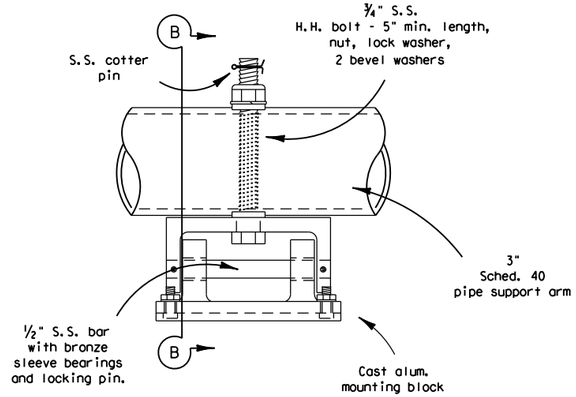

MOUNTING BRACKET

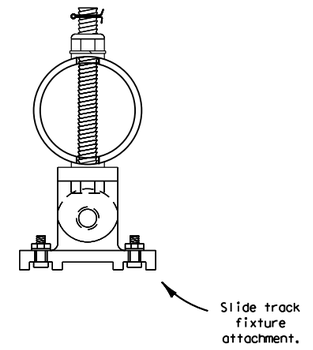

Section B-B

ILSN SIGN NOTES:

1. Eight foot ILSN sign shall not exceed 11.5 sq.ft. effective projected area (EPA) and shall not exceed a weight of 85 lbs.
   Six foot ILSN sign shall not exceed 8.7 sq.ft. EPA and shall not exceed a weight of 70 lbs.
2. Sign message shall be as shown elsewhere in the plans.
3. See Special Specification, "Internally Lighted Street Name Signs" for additional details.

EXPLANATION OF DESCRIPTION

ILSN Sign 6 S

- ILSN Sign: Internally lighted street name sign
- 6: Sign length; 6 or 8 ft.
- S: Single or double face

Texas Department of Transportation
Traffic Operations Division

STREET NAME SIGN DETAILS (ILLUMINATED)

SNS-95

© TxDOT August 1995

REVISIONS

DN: TXDOT	CK: TXDOT	DW: TXDOT	CK: TXDOT

CONT	SECT	JOB	HIGHWAY
XXXX	XX	XXX	XXXX
DIST	COUNTY		SHEET NO.
AUS	COUNTY		395

DISCLAIMER: The use of this standard is governed by the "Texas Engineering Practice Act". No warranty of any kind is made by TxDOT for any purpose whatsoever. TxDOT assumes no responsibility for the conversion of this standard to other formats or for incorrect results or damages resulting from its use.

DATE: 4/4/2023 1:59:32 PM
FILE: G:\TXC\Projects\City*RoundRock\8819-00*WyomingSprings*PSE\03*CADD\01*Shts\13-SGNLSYS\Strds\122*sma-80.dgn

Arm Length	ROUND POLES					POLYGONAL POLES					Foundation Type
	D_B	D_{19}	D_{24}	D_{30}	① thk	D_B	D_{19}	D_{24}	D_{30}	① thk	
ft.	in.	in.	in.	in.	in.	in.	in.	in.	in.	in.	
20	10.5	7.8	7.1	6.3	.179	11.5	8.5	7.7	6.8	.179	30-A
24	11.0	8.3	7.6	6.8	.179	12.0	9.0	8.2	7.3	.179	30-A
28	11.5	8.8	8.1	7.3	.179	12.5	9.5	8.7	7.8	.179	30-A
32	12.5	9.8	9.1	8.3	.179	12.0	9.0	8.2	7.3	.239	30-A
36	12.0	9.3	8.6	7.8	.239	12.5	9.5	8.7	7.8	.239	36-A
40	12.0	9.3	8.6	7.8	.239	13.5	10.5	9.7	8.8	.239	36-A
44	12.5	9.8	9.1	8.3	.239	14.0	11.0	10.2	9.3	.239	36-A
48	13.0	10.3	9.6	8.8	.239	15.0	12.0	11.2	10.3	.239	36-A

Arm Length	ROUND ARMS					POLYGONAL ARMS				
	L_1	D_1	D_2	① thk	Rise	L_1	D_1	② D_2	① thk	Rise
ft.	ft.	in.	in.	in.		ft.	in.	in.	in.	
20	19.1	6.5	3.8	.179	1'-9"	19.1	7.0	3.5	.179	1'-8"
24	23.1	7.5	4.3	.179	1'-10"	23.1	7.5	3.5	.179	1'-9"
28	27.1	8.0	4.2	.179	1'-11"	27.1	8.0	3.5	.179	1'-10"
32	31.0	9.0	4.7	.179	2'-1"	31.0	9.0	3.5	.179	2'-0"
36	35.0	9.5	4.6	.179	2'-4"	35.0	10.0	3.5	.179	2'-1"
40	39.0	9.5	4.1	.239	2'-8"	39.0	9.5	3.5	.239	2'-3"
44	43.0	10.0	4.1	.239	2'-11"	43.0	10.0	3.5	.239	2'-6"
48	47.0	10.5	4.1	.239	3'-4"	47.0	11.0	3.5	.239	2'-9"

D_B = Pole Base O.D.
D_{19} = Pole Top O.D. with no Luminaire and no ILSN
D_{24} = Pole Top O.D. with ILSN w/out Luminaire
D_{30} = Pole Top O.D. with Luminaire
D_1 = Arm Base O.D.
D_2 = Arm End O.D.
L_1 = Shaft Length
L = Nominal Arm Length

① Thickness shown are minimums, thicker materials may be used.

② D_2 may be increased by up to 1" for polygonal arms.

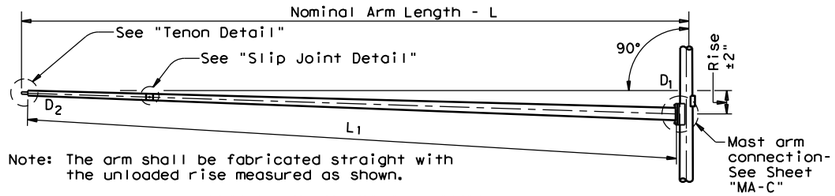

Note: The arm shall be fabricated straight with the unloaded rise measured as shown.

TRAFFIC SIGNAL ARM

(Fixed Mount)

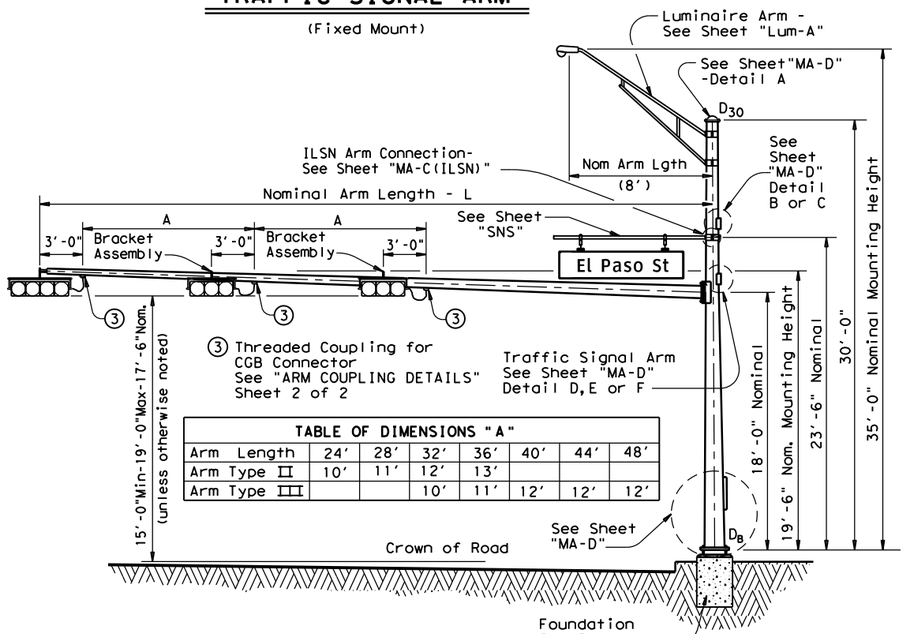

TABLE OF DIMENSIONS "A"							
Arm Length	24'	28'	32'	36'	40'	44'	48'
Arm Type II	10'	11'	12'	13'			
Arm Type III			10'	11'	12'	12'	12'

STRUCTURE ASSEMBLY

SHIPPING PARTS LIST

Ship each pole with the following attached: enlarged hand hole, pole cap, fixed-arm connection bolts and washers and any additional hardware listed in the table.

Nominal Arm Length	30' Poles With Luminaire		24' Poles With ILSN		19' Poles With No Luminaire and No ILSN	
	Above hardware plus: One (or two if ILSN attached) small hand hole, clamp-on simplex		Above hardware plus one small hand hole		See note above	
ft	Designation	Quantity	Designation	Quantity	Designation	Quantity
20	20L-80		20S-80		20-80	
24	24L-80		24S-80		24-80	
28	28L-80		28S-80		28-80	
32	32L-80		32S-80		32-80	
36	36L-80		36S-80		36-80	
40	40L-80		40S-80		40-80	
44	44L-80	2	44S-80		44-80	
48	48L-80	1	48S-80		48-80	

Traffic Signal Arms (1 per Pole) Ship each arm with the listed equipment attached

Nominal Arm Length	Type I Arm (1 Signal)		Type II Arm (2 Signals)		Type III Arm (3 Signals)	
	1 CGB connector		1 Bracket Assembly and 2 CGB Connectors		2 Bracket Assemblies and 3 CGB Connectors	
ft	Designation	Quantity	Designation	Quantity	Designation	Quantity
20	20I-80					
24	24I-80		24II-80			
28	28I-80		28II-80			
32			32II-80		32III-80	
36			36II-80		36III-80	
40					40III-80	
44					44III-80	2
48					48III-80	2

Luminaire Arms (1 per 30' pole)

Nominal Arm Length	Quantity
8' Arm	3

ILSN Arm (Max. 2 per pole) Ship with clamps, bolts and washers

Nominal Arm Length	Quantity
7' Arm	
9' Arm	4

Anchor Bolt Assemblies (1 per pole)

Anchor Bolt Diameter	Anchor Bolt Length	Quantity
1 ½"	3'-4"	
1 ¾"	3'-10"	3

Each anchor bolt assembly consists of the following: Top and Bottom templates, 4 anchor bolts, 8 nuts, 8 flat washers, and 4 nut anchor devices (Type 2) per Standard Drawing "TS-FD".

Templates may be removed for shipment.

SHEET 1 OF 2

Texas Department of Transportation
Traffic Operations Division

TRAFFIC SIGNAL SUPPORT STRUCTURES

SINGLE MAST ARM ASSEMBLY

(80 MPH WIND ZONE)

SMA-80(1)-12

© TxDOT August 1995

DN: MS	CK: JSY	DW: MMF	CK: JSY

REVISIONS
5-96
11-99
1-12

CONT	SECT	JOB	HIGHWAY
XXXX	XX	XXX	XXXX
DIST	COUNTY		SHEET NO.
AUS	COUNTY		396

122A

DISCLAIMER: The use of this standard is governed by the "Texas Engineering Practice Act". No warranty of any kind is made by TxDOT for any purpose whatsoever. TxDOT assumes no responsibility for the conversion of this standard to other formats or for incorrect results or damages resulting from its use.

DATE: 4/4/2023 1:59:32 PM
FILE: G:\TXC\Projects\City*RoundRock\8819-00*WyomingSprings*PSE\03*CADD\01*Shts\13-SGNLSYS\sigstds\122*sma-80.dgn

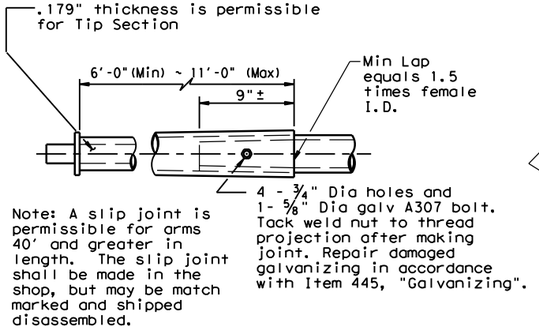

SLIP JOINT DETAIL

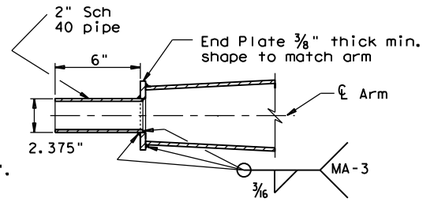

TENON DETAIL

Stainless steel bands (or Cables) and cast bracket as in "Astro-Brac", "Sky Bracket" or "Easy Bracket" with 1 ½" Dia Threaded Coupling.

BRACKET ASSEMBLY

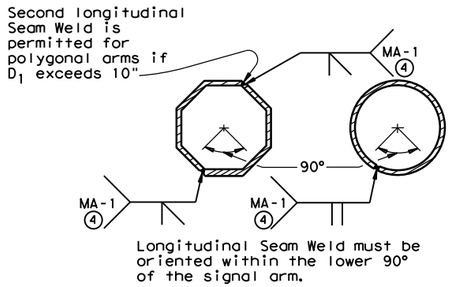

ARM WELD DETAIL

④ 60% Min. penetration 100% pemetration within 6" of circumferential base welds.

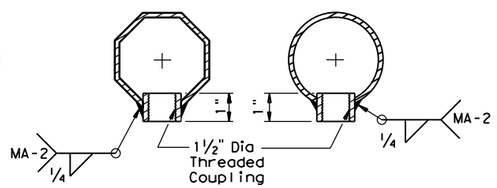

ARM COUPLING DETAILS

VIBRATION WARNING

Mast Arms of SMA and DMA structures and clamp-on Arms of LMA structures of approximately 40 ft or longer are subject to harmonic vertical vibrations in light wind conditions due to the aeroelastic characteristics of a few of the myriads of possible combinations of the following: signal numbers, weights and positions; existence/solidity of backplates; presence of additional attachments to the arm, such as signs and cameras; arm-wind orientation; and arm-pole stiffness.

Such vibrations may cause fatigue damage to the structure and may lead to galloping in moderate wind conditions which may further damage the structure and alarm the public. Tests have indicated that when wind is blowing toward the back side of signal heads having un-vented backplates attached the probability of unacceptable harmonic vibration and/or galloping is rather high.

If backplates are not required for improved visibility they should not be applied to the signal heads or, if they must be applied, they should be vented as a first and inexpensive measure to mitigate vibrations.

The traffic signal mast arms shall be visually inspected in 5 to 20 mph wind conditions after installation of signal heads and any attachments, including any required backpates. If vertical movements with a total excursion (maximum upward excursion to maximum downward excursion) of more than approximately 8" are observed at the arm tip, a damping plate shall be fitted to the arm. See "Damping Plate Mounting Details" on standard sheet, MA-DPD-10.

This visual inspection shall be repeated after each modification of the structure that could affect its aeroelastic response. Excessive vibrations shall not be allowed to continue for more than two days.

GENERAL NOTES:

Design conforms to 1994 AASHTO Standard Specifications for Structural Supports for Highway Signs, Luminaires, and Traffic Signals and Interim Specifications thereto. Design Wind Speed equals 80 mph plus a 1.3 gust factor.

Poles are designed to support one 8'-0" luminaire arm, one 9'-0" internally lighted street name sign and one traffic signal arm with a length as tabulated. The specified luminaire load applied at the end of the luminaire arm equals 60 lbs vertical dead load plus the horizontal wind load on an effective projected area of 1.6 sq ft. The specified internally lighted street name sign load applied 4.5 ft from the centerline of the pole equals 85 lbs vertical dead load plus horizontal wind load on an effective projected area of 11.5 sq ft. The specified signal load applied at the end of the traffic signal arm equals 180 lbs vertical dead load plus the horizontal wind load on an effective projected area of 32.4 sq ft (actual area times drag coefficient).

See Standard Sheet "MA-D" for pole details, "MA-C" for traffic signal arm connection details, "MA-C (ILSN)" for internally lighted street name sign arm connection details, "LUM-A" for luminaire arm and connection details, "SNS" for internally lighted street name sign details, and "TS-FD" for anchor bolt and foundation details. See "MA-C" for material specifications.

Fabrication shall be in accordance with Item 686, "Traffic Signal Pole Assemblies (Steel)" and with the details, dimensions, and weld procedures shown herein. Weld references call for preapproved weld procedures which the Fabricator must obtain prior to fabrication. Materials, fabrication tolerances, and shipping practices shall meet the requirements of this sheet and Item 686, "Traffic Signal Pole Assemblies (Steel)".

Unless otherwise noted, all parts shall be galvanized in accordance with Item 445, "Galvanizing", after fabrication.

Deviation from the details and dimensions shown herein require submission of shop drawings in accordance with Item 441, "Steel Structures". Alternate designs are not acceptable.

Texas Department of Transportation
Traffic Operations Division

TRAFFIC SIGNAL SUPPORT STRUCTURES

SINGLE MAST ARM ASSEMBLY

(80 MPH WIND ZONE)

SMA-80(2)-12

© TxDOT August 1995

DN: MS	CK: JSY	DW: MMF	CK: JSY

REVISIONS
5-96
1-12

CONT	SECT	JOB	HIGHWAY
XXXX	XX	XXX	XXXX
DIST	COUNTY		SHEET NO.
AUS	COUNTY		397

122B

DISCLAIMER: The use of this standard is governed by the "Texas Engineering Practice Act". No warranty of any kind is made by TxDOT for any purpose whatsoever. TxDOT assumes no responsibility for the conversion of this standard to other formats or for incorrect results or damages resulting from its use.

DATE: 4/4/2023 1:59:34 PM
FILE: G:\TXC\Projects\City\RoundRock\8819-00\WyomingSprings\PSE\03\CADD\01\Shts\13-SGNLS\Srds\126A\mac.dgn

ARM SIZE D_1 in.	ARM SIZE ∓ in.	A in.	B in.	C in.	D in.	E in.	CONN BOLT DIA in.
6.5	.179	12	9	9	6	1 3/4	1
7.5	.179	13	9	10	6	1 3/4	1
8.0	.179	14	10	11	7	2	1 1/4
9.0	.179	16	11	13	8	2	1 1/4
9.5	.179	17	12	14	9	2	1 1/4
9.5	.239	18	12	15	9	2	1 1/4
10.0	.239	18	12	15	9	2	1 1/4
10.5	.239	18	13	15	10	3	1 1/2
11.0	.239	18	13	15	10	3	1 1/2

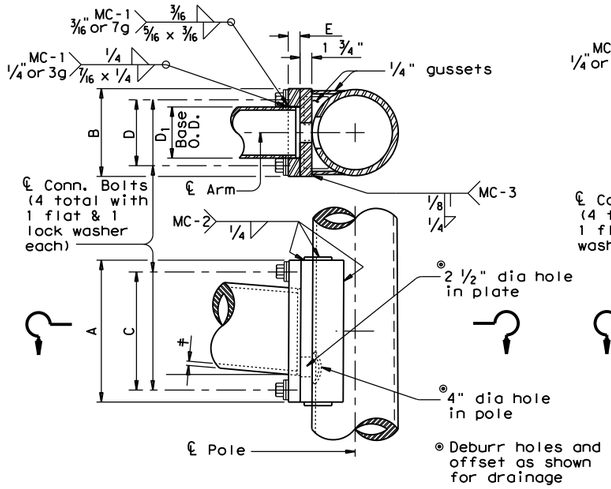

FIXED MOUNT DETAIL 1

ARM SIZE D_1 in.	ARM SIZE ∓ in.	A in.	F in.	CONN. BOLTS No. ea.	CONN. BOLTS Dia in.	PIN BOLTS No. ea.	PIN BOLTS Dia in.
6.5	.179	12	6	4	1	2	5/8
7.5	.179	14	8	4	1	2	5/8
8.0	.179	14	8	4	1	2	5/8
9.0	.179	16	10	4	1	2	5/8
9.5	.179	18	12	4	1 1/4	3	5/8
9.5	.239	18	12	4	1 1/4	3	5/8
10.0	.239	18	12	4	1 1/4	3	5/8

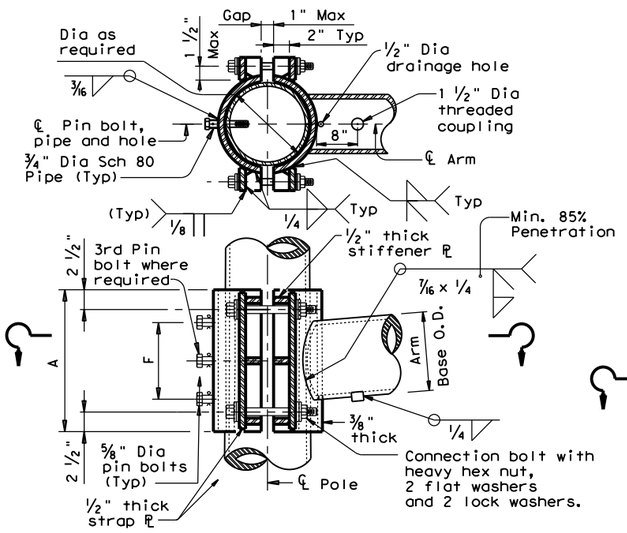

CLAMP-ON DETAIL 1

ARM SIZE D_1 in.	ARM SIZE ∓ in.	A in.	F in.	T in.	CONN. BOLTS No. ea.	CONN. BOLTS Dia in.	PIN BOLTS No. ea.	PIN BOLTS Dia in.
7.0	.179	12	6	3/4	4	3/4	2	5/8
7.5	.179	14	8	3/4	4	3/4	2	5/8
8.0	.179	14	8	3/4	4	3/4	2	5/8
9.0	.179	16	10	7/8	4	1	2	5/8
10.0	.179	18	10	7/8	4	1	2	5/8
9.5	.239	18	10	1	6	1	3	5/8
10.0	.239	18	10	1	6	1	3	5/8

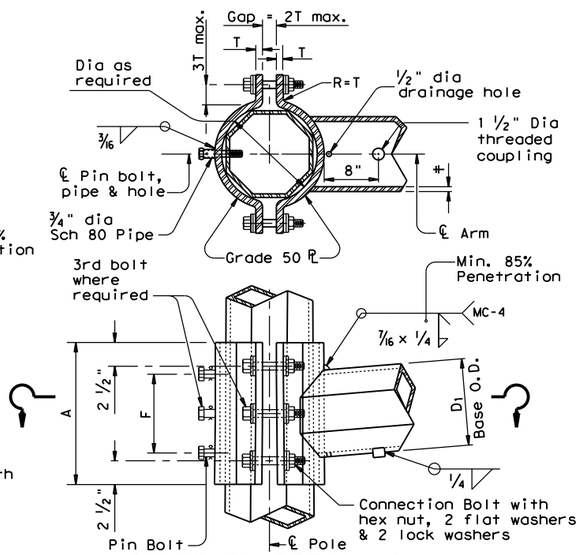

CLAMP-ON DETAIL 2

ARM SIZE D_1 in.	ARM SIZE ∓ in.	A in.	F in.	CONN. BOLTS No. ea.	CONN. BOLTS Dia in.	PIN BOLTS No. ea.	PIN BOLTS Dia in.
6.5	.179	12	6	4	1	2	5/8
7.5	.179	14	8	4	1	2	5/8
8.0	.179	14	8	4	1	2	5/8
9.0	.179	16	10	4	1	2	5/8
9.5	.179	18	12	6	1	3	5/8
9.5	.239	18	12	6	1	3	5/8
10.0	.239	18	12	6	1	3	5/8

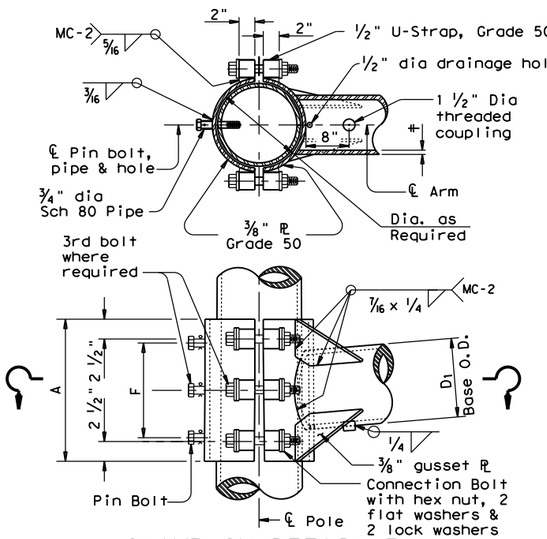

CLAMP-ON DETAIL 3

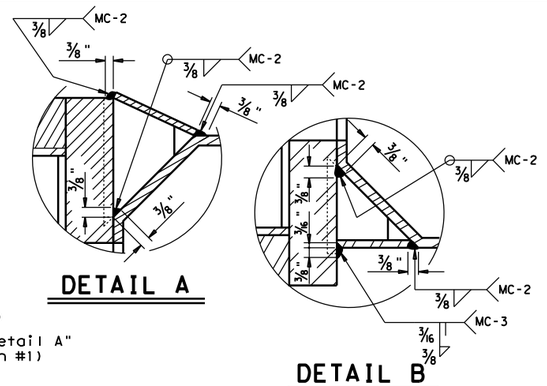

DETAIL A

DETAIL B

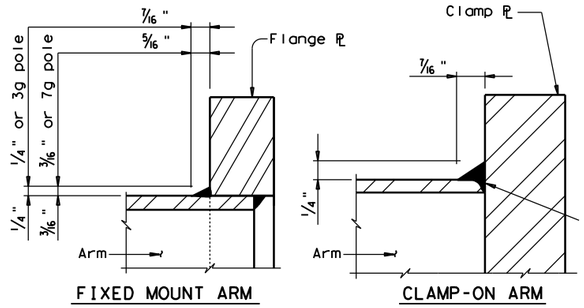

FIXED MOUNT ARM

CLAMP-ON ARM

ARM BASE WELD DETAILS

ARM SIZE D_1 in.	ARM SIZE ∓ in.	A in.	F in.	CONN. BOLTS No. ea.	CONN. BOLTS Dia in.	PIN BOLTS No. ea.	PIN BOLTS Dia in.
6.5	.179	12	6	4	1	2	5/8
7.5	.179	14	8	4	1	2	5/8
8.0	.179	14	8	4	1	2	5/8
9.0	.179	16	10	4	1	2	5/8
9.5	.179	18	12	6	1	3	5/8
9.5	.239	18	12	6	1	3	5/8
10.0	.239	18	12	6	1	3	5/8

MATERIALS	
Round Shafts or Polygonal Shafts ①	ASTM A595 Gr.A, A588, A1008 HSLAS Gr.50 Class 2, A1011 HSLAS Gr.50 Class 2, A572 Gr.50 or A1011 SS Gr.50 ②
Plates ①	ASTM A36, A588, or A572 Gr.50
Connection Bolts	ASTM A325 or A449, except where noted
Pin Bolts	ASTM A325
Pipe ①	ASTM A53 Gr.B, A501, A1008 HSLAS-F Gr.50, A1011 HSLAS-F Gr.50
Misc. Hardware	Galvanized steel or stainless steel or as noted

① ASTM A572, A1008 HSLAS, A1011 HSLAS, A1008 HSLAS-F, A1011 HSLAS-F or A1011 SS may have higher yield strengths but shall not have less elongation than the grade indicated.

② ASTM A1011 SS Gr.50 material shall also have a minimum elongation of 18 percent in 8 inches or 23 percent in 2 inches. Material thickness in excess of those stipulated under A1011 SS will be acceptable providing the material meets all other A1011 SS requirements and the requirements of this item.

GENERAL NOTES:

Clamp-on details are used for the second arm on dual mast arm assemblies. A Maximum 1 1/2" wide vertical slotted hole shall be cut in the front clamp plate to facilitate drainage during galvanizing. The slot shall be centered behind the arm and shall be no longer than the arm diameter minus 1"

Fixed mount details are used for single mast arm assemblies and for the first arm on dual mast arm assemblies.

Where duplicate parts occur on a detail, welds shown for one part shall apply to all similar parts on the detail.

Pin bolts are required to prevent rotation of clamp-on arms under design wind forces.

NOTE:

Pin bolts shall be A325 with threads excluded from the shear plane. Pin bolt and 3/4" dia pipe shall have 3/16" dia holes for a 1/8" dia galvanized cotter pin. Back clamp plate shall be furnished with a 3/4" dia hole for each pin bolt. An 11/16" dia hole for each pin bolt shall be field drilled through the pole after arm orientations have been approved by the Engineer.

Texas Department of Transportation
Traffic Operations Division

STANDARD ASSEMBLY FOR TRAFFIC SIGNAL SUPPORT STRUCTURES

MAST ARM CONNECTIONS

MA-C-12

© TxDOT August 1995

DN: MS	CK: JSY	DW: MMF	CK: JSY
REVISIONS 5-96 5-09 1-12	CONT	SECT	JOB	HIGHWAY
	XXXX	XX	XXX	XXXX
	DIST	COUNTY		SHEET NO.
	AUS	COUNTY		398

126A

DISCLAIMER: The use of this standard is governed by the "Texas Engineering Practice Act". No warranty of any kind is made by TxDOT for any purpose whatsoever. TxDOT assumes no responsibility for the conversion of this standard to other formats or for incorrect results or damages resulting from its use.

DATE: 4/4/2023 1:59:35 PM
FILE: G:\TXC\Projects\City*RoundRock\8819-00*WyomingSprings*PSE\03*CADD\01*Shts\13-SGNLS\Srds\126B*maclsn.dgn

TABLE OF DIMENSIONS for ILSN Support Arm Clamp-on Details 1, 2 and 3						
ILSN ARM SIZE	A	F	CONN. BOLTS		PIN BOLTS	
			No.	Dia	No.	Dia
3 in. dia Schedule 40 Pipe	in.	in.	ea.	in.	ea.	in.
	10	4	4	¾	2	⅝

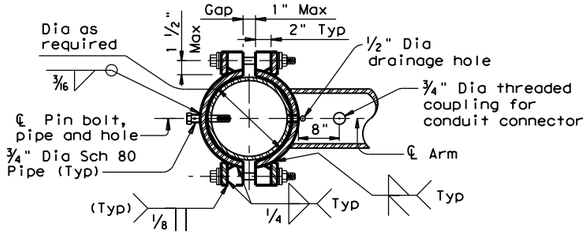

SECTION A-A

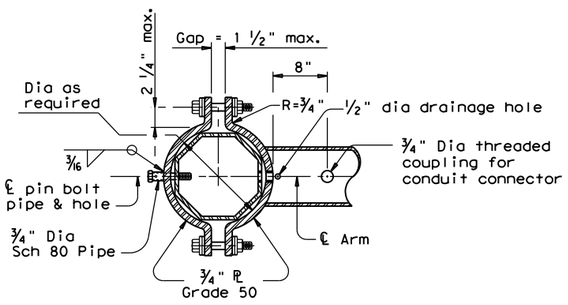

SECTION B-B

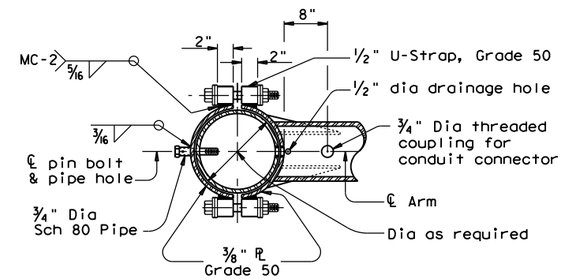

SECTION C-C

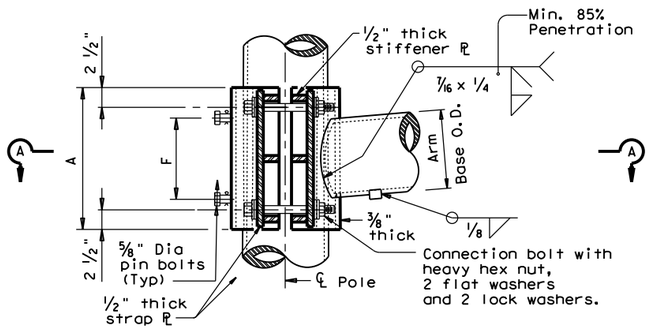

ILSN CLAMP-ON DETAIL 1

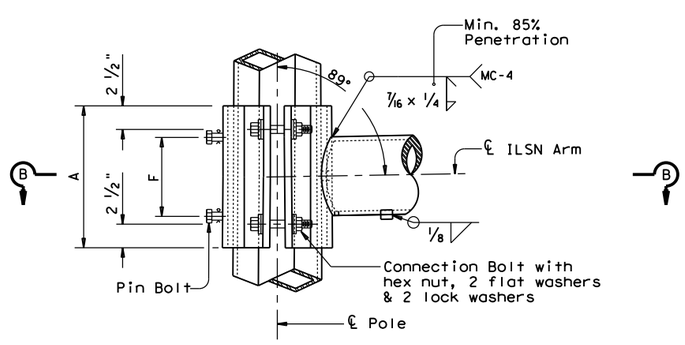

ILSN CLAMP-ON DETAIL 2

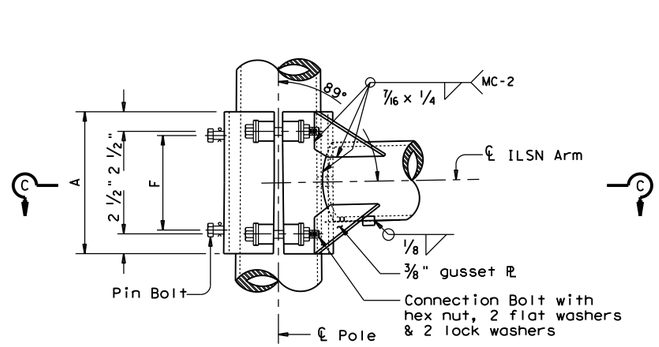

ILSN CLAMP-ON DETAIL 3

GENERAL NOTES:

Clamp-on details shall be used for ILSN support arm assemblies. A 1 ½" inch diameter hole shall be cut in the front clamp plate for wiring access. A matched hole shall be field drilled through the pole to provide wire access after arm is oriented. Deburr both holes.

Where duplicate parts occur on a detail, welds shown for one part shall apply to all similar parts on the details.

Pin bolts are required to prevent rotation of clamp-on arms under design wind forces.

NOTE:

Pin bolts shall be A325 with threads excluded from the shear plane. Pin bolt and ¾" dia pipe shall have 7/16" dia holes for a 1/8" dia galvanized cotter pin. Back clamp plate shall be furnished with a ¾" dia hole for each pin bolt. An 11/16" dia hole for each pin bolt shall be field drilled through the pole after arm orientations have been approved by the Engineer.

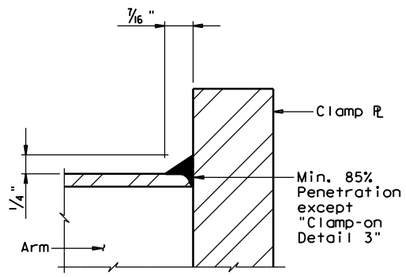

CLAMP-ON ARM

ARM BASE WELD DETAILS

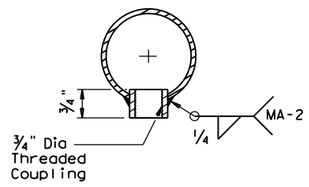

ILSN ARM COUPLING DETAIL

Texas Department of Transportation
Traffic Operations Division

STANDARD ASSEMBLY FOR TRAFFIC SIGNAL SUPPORT STRUCTURES

MAST-ARM CONNECTIONS

MA-C(ILSN)-12

© TxDOT August 1995

DN: MS	CK: JSY	DW: MMF	CK: JSY

REVISIONS
5-96
1-12

CONT	SECT	JOB	HIGHWAY
XXXX	XX	XXX	XXXX
DIST	COUNTY		SHEET NO.
AUS	COUNTY		399

126B

DISCLAIMER: The use of this standard is governed by the "Texas Engineering Practice Act". No warranty of any kind is made by TxDOT for any purpose whatsoever. TxDOT assumes no responsibility for the conversion of this standard to other formats or for incorrect results or damages resulting from its use.

DATE: 4/4/2023 1:59:36 PM
FILE: G:\TXC\Projects\City\RoundRock\8819-00\WyomingSprings\PSE\03\CADD\01\Shts\13-SGNLSYStrds\127*mod.dgn

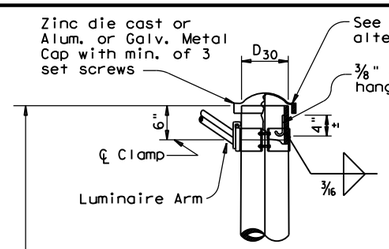

DETAIL A

(for pole with luminaire)

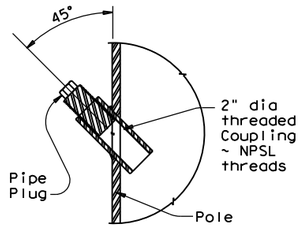

POLE COUPLING DETAIL

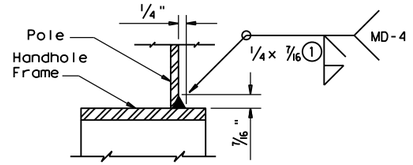

DETAIL G

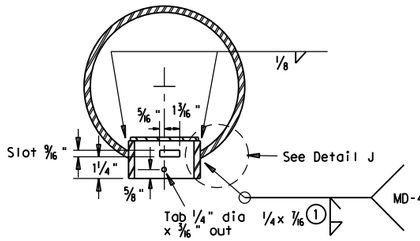

SECTION X-X

Opening for access compartment shall be no more than 1/16 inch wider than the access compartment itself.

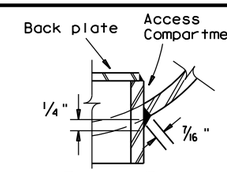

Round Pole

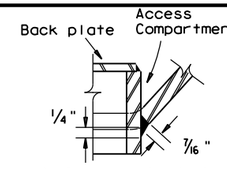

Polygonal Pole

DETAIL J

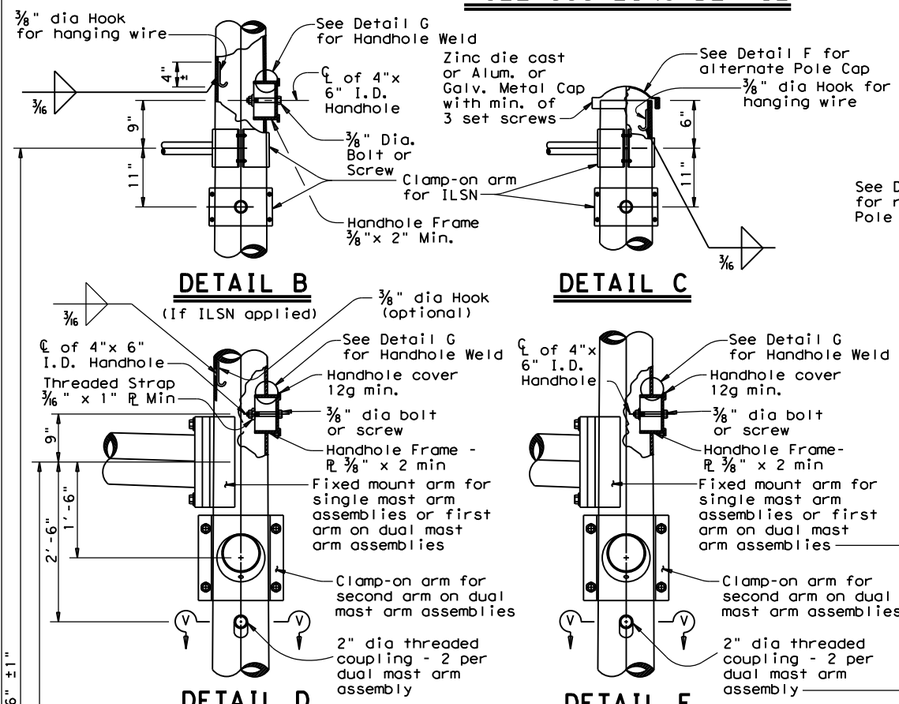

DETAIL B

(If ILSN applied)

DETAIL C

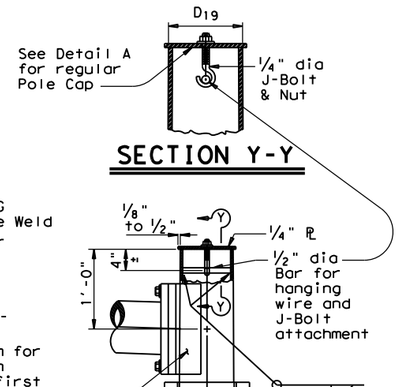

SECTION Y-Y

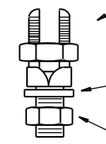

COPPER GROUND CONNECTOR

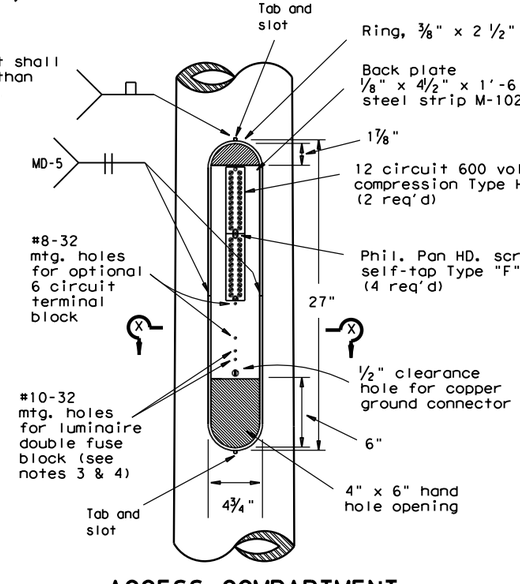

ACCESS COMPARTMENT

DETAIL D

(for 30' pole with luminaire and ILSN sign)

DETAIL E

(for 24' pole with ILSN sign and no luminaire)

DETAIL F

(for 19' pole with no ILSN sign and no luminaire)

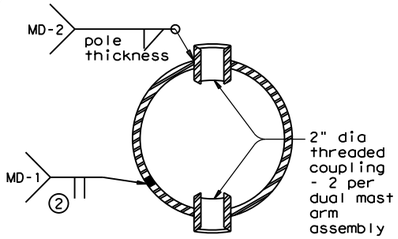

SECTION V-V

Anchor Bolt Diameter	Bolt Hole Diameter	Slot Length	Bolt Circle Diameter	Base PL Dim. L x T	Adjust. Range
1 1/2"	1 3/4"	3 1/2"	17"	18" x 1 1/2"	13.4°
1 3/4"	2"	4"	19"	20" x 1 3/4"	13.5°
2"	2 1/4"	4 1/2"	21"	22" x 2"	13.6°
2 1/4"	2 1/2"	5"	23"	24" x 2 1/4"	13.7°

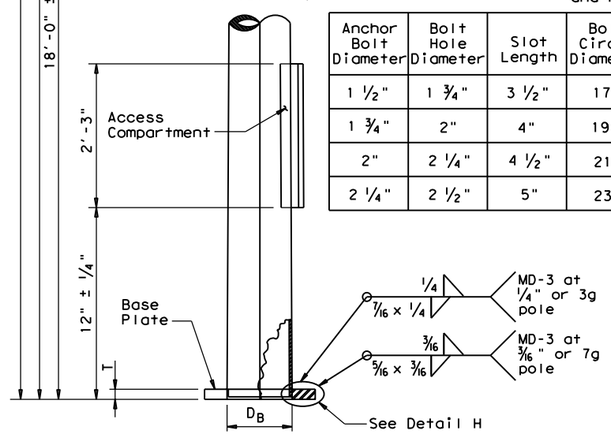

POLE ELEVATION

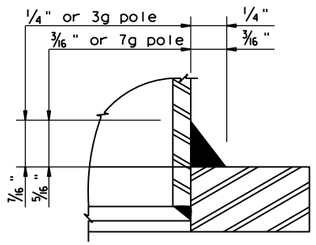

DETAIL H

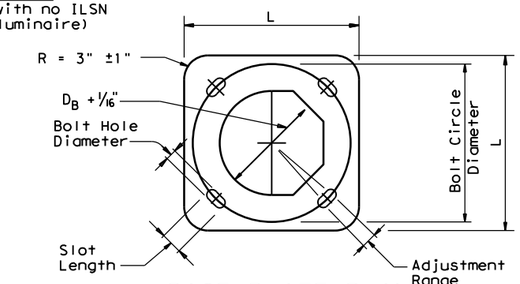

BASE PLATE PLAN

(1) 85% Min. penetration

(2) 60% Min. penetration 100% pemetration within 6" of circumferential base welds.

NOTES:

1. The cover shall be one piece formed from ABS plastic, shall be a pearl gray color, and shall be suitable for exposure to harsh sunlight and extreme weather. Cover shall latch with two screw latches and shall fit tightly to the enclosure ring to create a rainproof seal. Latch screws shall be 1/4-20 stainless flat socket head screws with tamper proof feature.
2. The pole manufacturer shall provide with each pole a separate kit consisting of: one cover with two latching assemblies, two terminal strips (Marathon #985GP12CU or approved equal), four #8-32 x 1 1/4" self tapping type "F" stainless steel pan head screws, and one ground connector (Blackburn TTC, Burndy KC22J12T13, or Ilsco SSS-5). The traffic signal contractor shall install the kit items in the field.
3. The screw hole spacing on the enclosure back plate shall be for two Marathon #985GP12 terminal strips, one Marathon #985GP06CU terminal strip, and one Bussmann #BM6032B fuse block.
4. Install one Bussmann #BM6032B, Littelfuse #L60030M-2C, or Ferraz-Shawmut #30352 fuse block for poles where luminaires are to be installed.

Texas Department of Transportation
Traffic Operations Division

TRAFFIC SIGNAL SUPPORT STRUCTURES MAST ARM POLE DETAILS

MA-D-12

© TxDOT August 1995

DN: MS	CK: JSY	DW: FDN	CK: CAL

REVISIONS
8-99
1-12

CONT	SECT	JOB	HIGHWAY
XXXX	XX	XXX	XXXX
DIST	COUNTY		SHEET NO.
AUS	COUNTY		400

DISCLAIMER: The use of this standard is governed by the "Texas Engineering Practice Act". No warranty of any kind is made by TxDOT for any purpose whatsoever. TxDOT assumes no responsibility for the conversion of this standard to other formats or for incorrect results or damages resulting from its use.

DATE: 4/4/2023 1:59:38 PM
FILE: G:\TXC\Projects\City*RoundRock\8819-00*WyomingSprings*PSE\03*CADD\01*Shts\13-SGNLS\Srds\128*rs-fd*2.dgn

FOUNDATION DESIGN TABLE

FDN TYPE	DRILLED SHAFT DIA	REINFORCING STEEL		EMBEDDED DRILLED SHAFT LENGTH-ft ④, ⑤, ⑥			ANCHOR BOLT DESIGN ①				FOUNDATION DESIGN LOAD ②		TYPICAL APPLICATION
		VERT BARS	SPIRAL & PITCH	TEXAS CONE PENETROMETER N blows/ft 10	15	40	ANCHOR BOLT DIA	Fy (ksi)	BOLT CIR DIA	ANCHOR TYPE	MOMENT K-ft	SHEAR Kips	
24-A	24"	4- #5	#2 at 12"	5.7	5.3	4.5	¾"	36	12 ¾"	1	10	1	Pedestal pole, pedestal mounted controller.
30-A	30"	8- #9	#3 at 6"	11.3	10.3	8.0	1 ½"	55	17"	2	87	3	Mast arm assembly. (see Selection Table)
36-A	36"	10- #9	#3 at 6"	13.2	12.0	9.4	1 ¾"	55	19"	2	131	5	Mast arm assembly. (see Selection Table) 30' strain pole with or without luminaire.
36-B	36"	12- #9	#3 at 6"	15.2	13.6	10.4	2"	55	21"	2	190	7	Mast arm assembly. (see Selection Table) Strain pole taller than 30' & strain pole with mast arm
42-A	42"	14- #9	#3 at 6"	17.4	15.6	11.9	2 ¼"	55	23"	2	271	9	Mast arm assembly. (see Selection Table)

NOTES:

① Anchor bolt design develops the foundation capacity given under Foundation Design Loads.

② Foundation Design Loads are the allowable moments and shears at the base of the structure.

③ Foundations may be listed separately or grouped according to similarity of location and type. Quantities are for the Contractor's information only.

④ Field Penetrometer readings at a depth of approximately 3 to 5 feet may be used to adjust shaft lengths.

⑤ If rock is encountered, the Drilled Shaft shall extend a minimum of two diameters into solid rock.

⑥ Decimal lengths in Design Table are to allow interpolation for other penetrometer values. Round to nearest foot for entry into Summary Table.

FOUNDATION SUMMARY TABLE ③

LOCATION IDENTIFICATION	AVG. N BLOW /ft.	FDN TYPE	NO. EA	DRILLED SHAFT LENGTH ⑥ (FEET) 24-A	30-A	36-A	36-B	42-A
POLE 01 (SAM BASS INT)		36-A	1			14		
POLE 02 (SAM BASS INT)		24-A	1	6				
POLE 03 (SAM BASS INT)		36-A	1			14		
POLE 04 (SAM BASS INT)		24-A	1	6				
POLE 05 (SAM BASS INT)		36-A	1			14		
POLE 07 (SAM BASS INT)		24-A	1	6				
TOTAL DRILLED SHAFT LENGTHS				18		42		

FOUNDATION SELECTION TABLE FOR STANDARD MAST ARM PLUS ILSN SUPPORT ASSEMBLIES (ft)

		FDN 30-A	FDN 36-A	FDN 36-B	FDN 42-A
80 MPH DESIGN WIND SPEED	MAX SINGLE ARM LENGTH	32'	48'		
	MAXIMUM DOUBLE ARM LENGTH COMBINATIONS	24' X 24'			
		28' X 28'			
		32' X 28'	32' X 32'		
			36' X 36'		
			40' X 36'		
			44' X 28'	44' X 36'	
100 MPH DESIGN WIND SPEED	MAX SINGLE ARM LENGTH		36'	44'	
	MAXIMUM DOUBLE ARM LENGTH COMBINATIONS		24' X 24'		
			28' X 28'		
			32' X 24'	32' X 32'	
				36' X 36'	
				40' x24'	40' X 36'
					44' x 36'

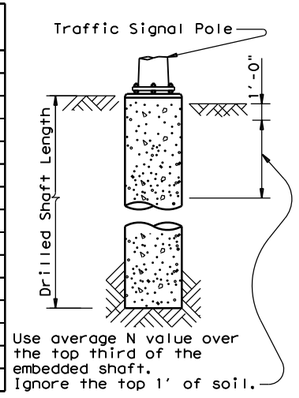

Use average N value over the top third of the embedded shaft. Ignore the top 1' of soil.

ANCHOR BOLT & TEMPLATE SIZES

BOLT DIA IN.	⑦ BOLT LENGTH	TOP THREAD	BOTTOM THREAD	BOLT CIRCLE	R2	R1
¾"	1'-6"	3"	—	12 ¾"	7 ⅛"	5 ⅝"
1 ½"	3'-4"	6"	4"	17"	10"	7"
1 ¾"	3'-10"	7"	4 ½"	19"	11 ¼"	7 ¾"
2"	4'-3"	8"	5"	21"	12 ½"	8 ½"
2 ¼"	4'-9"	9"	5 ½"	23"	13 ¾"	9 ¼"

⑦ Min dimensions given, longer bolts are acceptable.

EXAMPLE:
1. For 80mph design wind speed, foundation 30-A can support up to a 32' arm with another arm up to 28'
2. For 100mph design wind speed, foundation 36-A can support a single 36' mast arm.

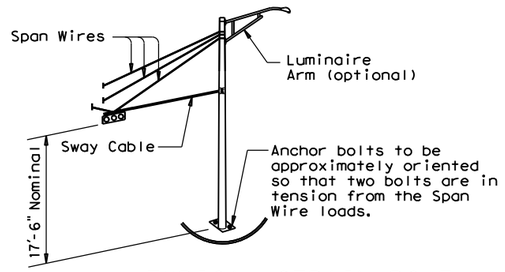

TYPICAL STRAIN POLE ASSEMBLY

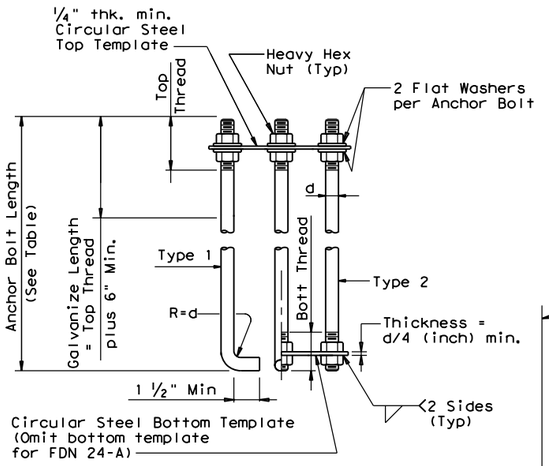

HOOKED ANCHOR (TYPE 1) NUT ANCHOR (TYPE 2)

ANCHOR BOLT ASSEMBLY

⑧ Orient anchor bolts orthogonal with the fixed arm direction to ensure that two bolts are in tension under dead load.

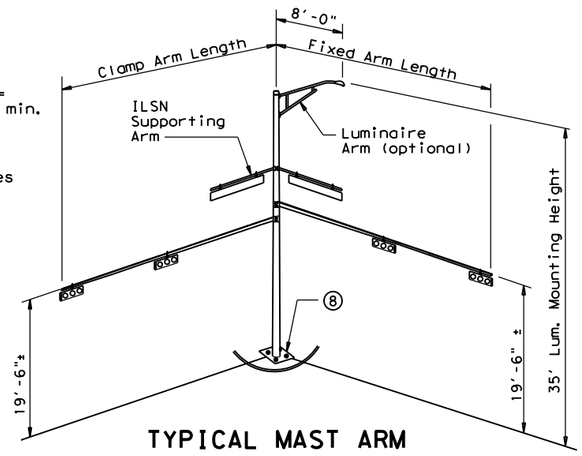

TYPICAL MAST ARM ASSEMBLY

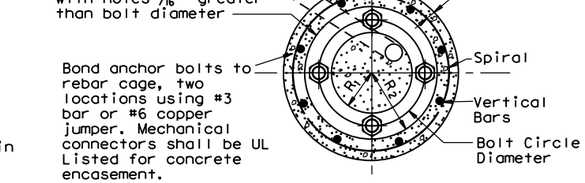

TOP VIEW

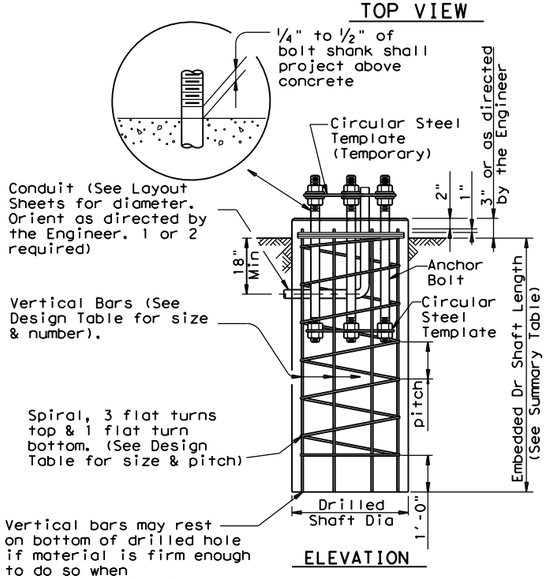

ELEVATION

FOUNDATION DETAILS

GENERAL NOTES:

Design conforms to 1994 AASHTO Standard Specifications for Structural Supports for Highway Signs, Luminaires and Traffic Signals and interim revisions thereto.

Reinforcing steel shall conform to Item 440, "Reinforcing Steel".

Concrete shall be Class "C".

Threads for anchor bolts and nuts shall be rolled or cut threads of 8UN series up to 2" in diameter or UNC series for all sizes. Bolts and nuts shall have Class 2A and 2B fit tolerances. Galvanized nuts shall be tapped after galvanizing.

Anchor bolts that are larger than 1" in diameter shall conform to "alloy steel" or "medium-strength mild steel" per Item 449, "Anchor Bolts". Anchor bolts that are 1" in diameter or less shall conform to ASTM A36. Galvanize a minimum of the top end thread length plus 6" for all anchor bolts unless otherwise noted. Exposed washers and exposed nuts shall be galvanized. All galvanizing shall be in accordance with Item 445, "Galvanizing".

Templates and embedded nuts need not be galvanized. Lubricate and tighten anchor bolts when erecting the structure in accordance with Item 449, "Anchor Bolts".

Texas Department of Transportation
Traffic Operations Division

TRAFFIC SIGNAL POLE FOUNDATION

TS-FD-12

©TxDOT August 1995

REVISIONS	DN: MS	CK: JSY	DW: MAO/MMF	CK: JSY/TEB
5-96 11-98 1-12	CONT	SECT	JOB	HIGHWAY
	XXXX	XX	XXX	XXXX
	DIST	COUNTY		SHEET NO.
	AUS	COUNTY		401

DISCLAIMER: The use of this standard is governed by the "Texas Engineering Practice Act". No warranty of any kind is made by TxDOT for any purpose whatsoever. TxDOT assumes no responsibility for the conversion of this standard to other formats or for incorrect results or damages resulting from its use.

DATE: 4/4/2023 1:59:39 PM
FILE: G:\TXC\Projects\City\RoundRock\8819-00\WyomingSprings\PSE\03\CADD\01\Shts\13-SGNLS\Srds\129\lum-a.dgn

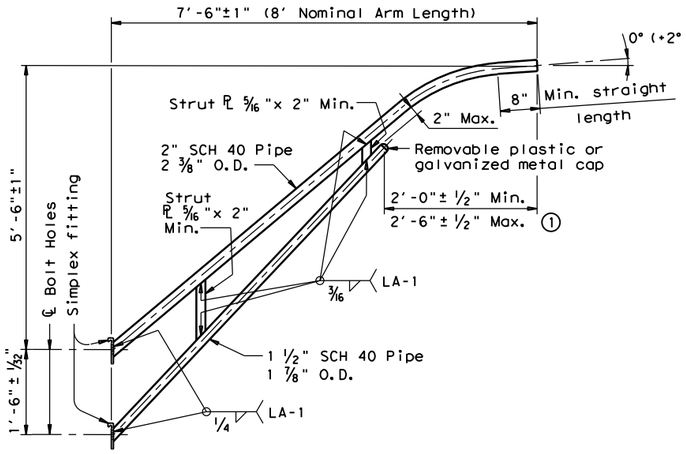

8-FOOT LUMINAIRE ARM

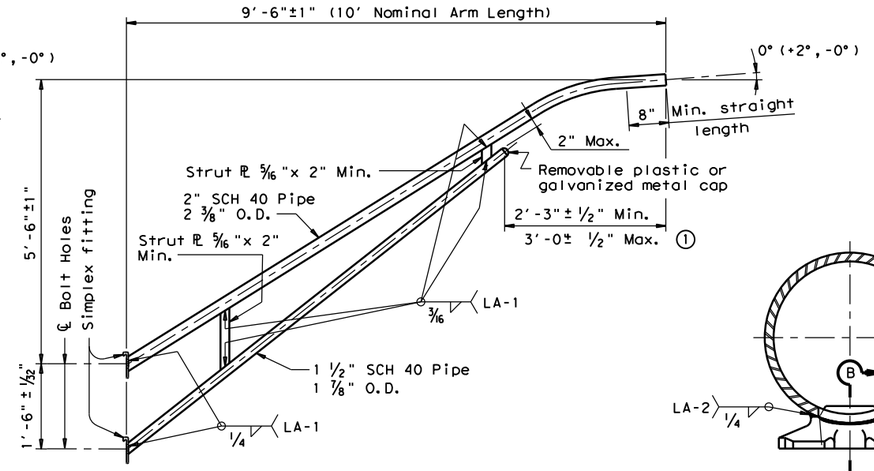

10-FOOT LUMINAIRE ARM

DIRECT ATTACHMENT DETAIL

MATERIALS	
Pole or Arm Simplex	ASTM A27 Gr.65-35 or A148 Gr.80-50, A576 Gr.1021 (3), or A36 (Arm only)
Arm Pipes	ASTM A53 Gr.B, A501, A1008 HSLAS-F Gr.50 (4), or A1011 HSLAS-F Gr.50 (4)
Arm Strut Plates (2)	ASTM A36, A572 Gr.50 (4), or A588
Misc.	ASTM designations as noted

(1) Dimensional limits are given to show acceptable variation in design. All of a Fabricator's production of a particular arm length shall have the same dimensions within specified tolerances.

(2) Any of the materials listed for plates may be used where the drawings do not specify a particular ASTM designation.

(3) A576 must be suitable for forging and also meet minimum tensile strength of 65 ksi, minimum yield of 35 ksi, and elongation in 2 inches of 22 percent.

(4) ASTM A572, A1008 HSLAS-F, and A1011 HSLAS-F may have higher yield strengths but shall not have less elongation than the grade indicated.

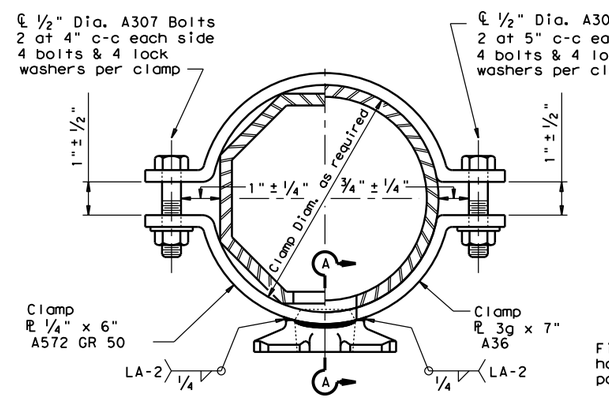

CLAMP ATTACHMENT DETAIL NO. 1 (HALF SECTION)

CLAMP ATTACHMENT DETAIL NO. 2 (HALF SECTION)

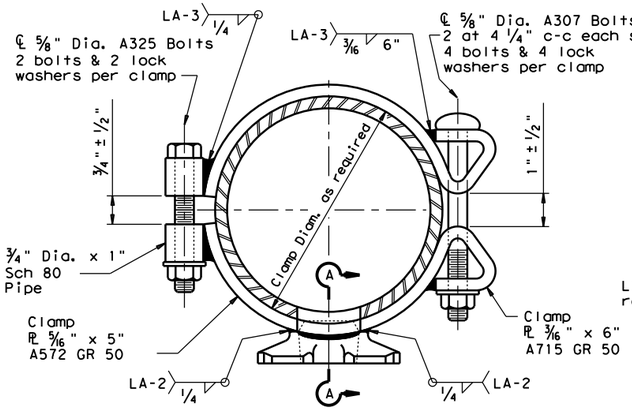

CLAMP ATTACHMENT DETAIL NO. 3 (HALF SECTION)

CLAMP ATTACHMENT DETAIL NO. 4 (HALF SECTION)

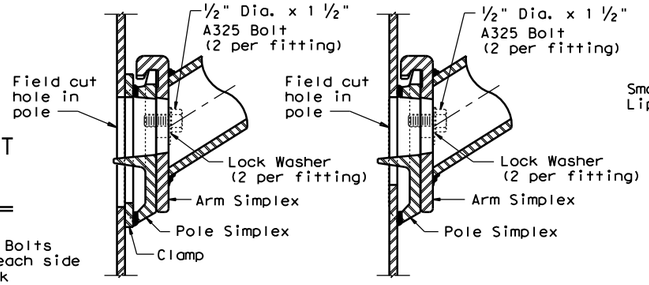

UPPER SIMPLEX FITTING

UPPER SIMPLEX FITTING

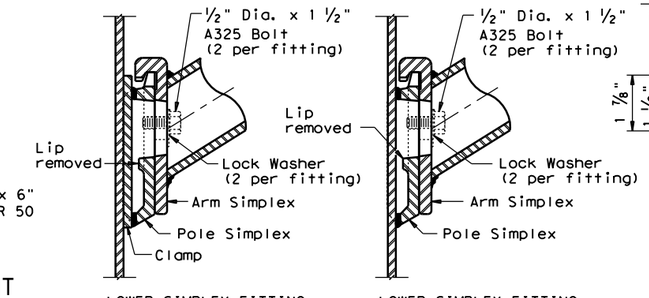

LOWER SIMPLEX FITTING

LOWER SIMPLEX FITTING

SECTON A-A

SECTON B-B

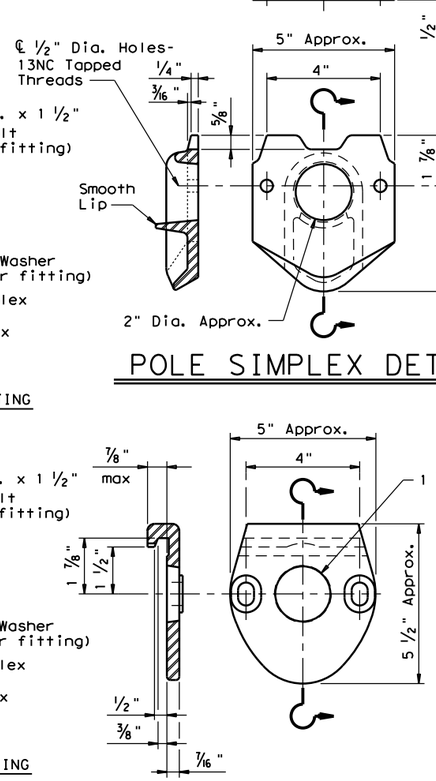

POLE SIMPLEX DETAIL

ARM SIMPLEX DETAIL

GENERAL NOTES:

Design conforms to 1994 AASHTO Standard Specifications for Structural Supports for Highway Signs, Luminaires, and Traffic Signals and Interim Revisions thereto. Design Wind Speed equals 90 mph plus a 1.3 gust factor. Arms are designed to support a 60 lb. luminaire having an effective projected area (actual area times drag coefficient) of 1.6 sq. ft.

Materials and fabrication shall be in accordance with Item 686, "Traffic Signal Pole Assemblies (Steel)" and with the details, dimensions, and weld procedures shown herein. Weld references call for preapproved weld procedures which the Fabricator must obtain prior to fabrication. In the absense of specified Fabricaton tolerances, dimensions shall be within the tolerances generally obtainable in normal fabrication practice.

Unless otherwise noted, all parts shall be galvanized after fabrication in accordance with Item 445, "Galvanizing".

Deviation from the details and dimensions shown herein require submission of shop drawings in accordance with Item 441, "Steel Structures". Alternate designs are not acceptable.

Each pole simplex fitting shall be supplied with 2 ASTM A325 bolts and 2 lock washers of the size specified. The bolts and lock washers shall be secured to the pole with the other hardware items called for in the plans. When clamp attachment is specified, the Fabricator shall ship the clamp assembly securely attached to the pole at the location shown on the plans.

If clamp assemblies are ordered without poles, the Fabricator shall ship one upper and one lower clamp assembly together in a single package, including all nuts and washers required for the clamps and simplex fittings.

Texas Department of Transportation
Traffic Operations Division

STANDARD ASSEMBLY DRAWINGS FOR LUMINAIRE SUPPORT STRUCTURES

ARM DETAILS

LUM-A-12

© TxDOT August 1995

DN: LEH	CK: JSY	DW: LTT	CK: TEB

REVISIONS	CONT	SECT	JOB	HIGHWAY
5-96	XXXX	XX	XXX	XXXX
1-99				
1-12	DIST	COUNTY		SHEET NO.
	AUS	COUNTY		402

DISCLAIMER:
The use of this standard is governed by the "Texas Engineering Practice Act". No warranty of any kind is made by TxDOT for any purpose whatsoever. TxDOT assumes no responsibility for the conversion by TxDOT for any purpose whatsoever. TxDOT assumes no responsibility for the conversion of this standard to other formats or for incorrect results or damages resulting from its use.

DATE: 4/4/2023 1:59:41 PM
FILE: G:\TXC\Projects\City_RoundRock\8819-00_WyomingSprings_PSE\03_CADD\01_Shts\MESASHTS_RoadX1192_Ramp2x2.dgn

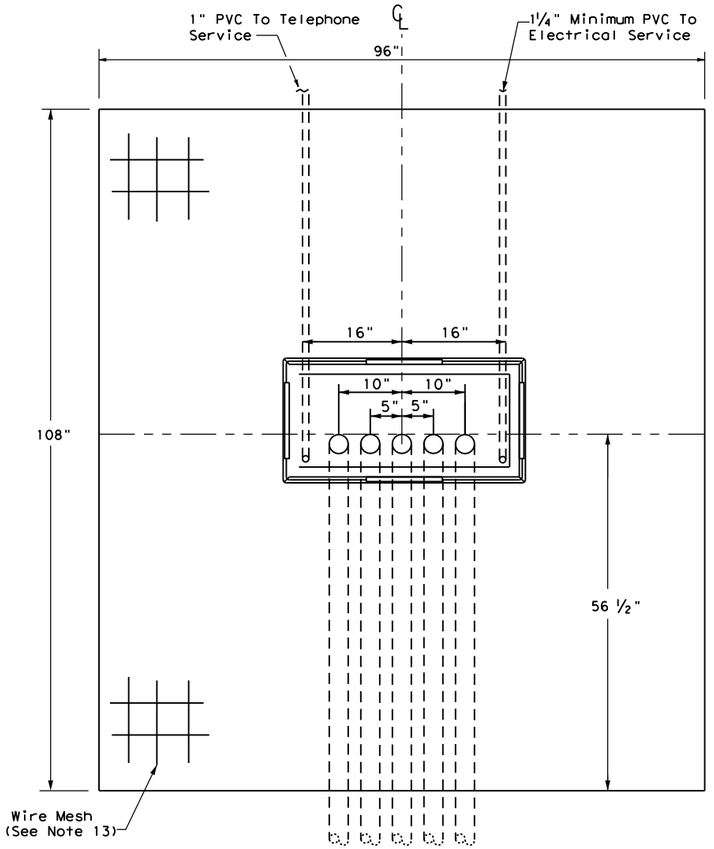

TOP VIEW

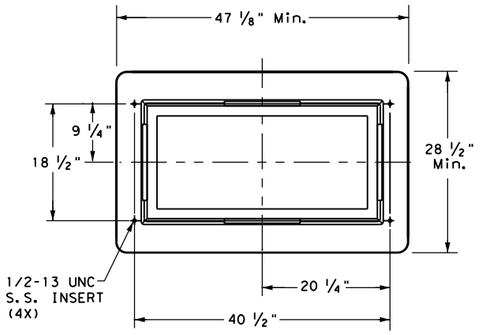

CABINET BASE

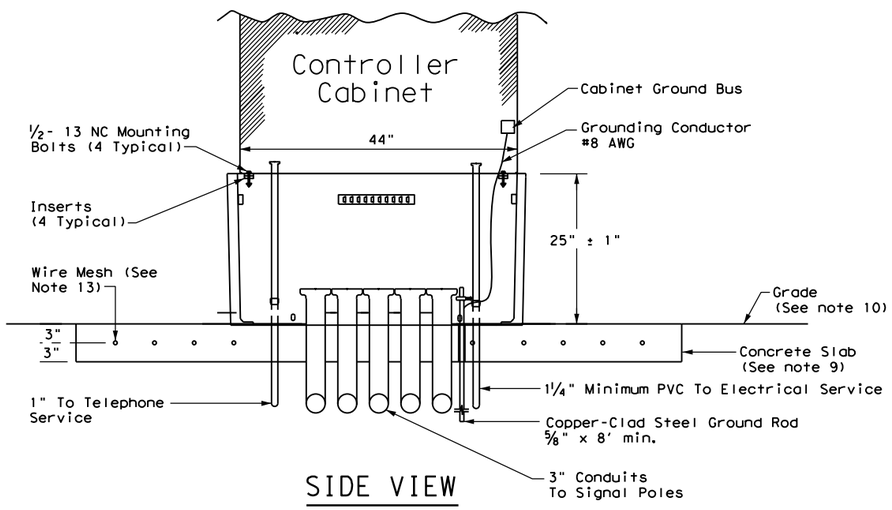

SIDE VIEW

TRAFFIC SIGNAL CONTROLLER BASE:

1. Provide a traffic signal controller base (cabinet base) manufactured of polymer concrete material consisting of calcareous and siliceous stone; glass fibers and thermoset polyester resin. The polymer concrete cabinet base must be reinforced on the inside of the cabinet base with fiberglass matting. Provide one of the following bases: Armorcast Part # A6001848X24, Quazite Model # PG3048Z709, or other as approved by TxDOT Traffic Safety Division.
2. The polymer concrete material must have a minimum compressive strength of 10,300 pounds per square inch (psi), minimum flexural strength of 3600 psi, and minimum shear strength of 3600 psi.
3. The polymer concrete cabinet base must conform to the dimensions shown and must accommodate a standard TxDOT basemount cabinet.
4. Supply the cabinet base with four 1#2"-13 UNC stainless steel inserts for attachment of the cabinet to the base. Inserts must withstand a minimum torque of 50 ft-lb and a minimum straight pull out strength of 750 lbs.
5. Provide the cabinet base with 4 cable racks mounted one on each side of the base 2" to 7 " from the top edge of the base. Unless approved otherwise, cable racks must be 1-1/2 x 9#16x 3#16inch steel channel with eight T-slots spaced at 1-1/2 inches. The cable racks must easily accommodate the insertion of tie wraps to attach field wiring to the racks to serve as strain relief. Secure cable racks to the base using 1#2"-13 UNC stainless steel screws and inserts.
6. The cabinet base, when secured to the concrete slab with controller cabinet attached, must withstand a minimum wind load of 125 mph or a 850 lb force applied at 49" above the bottom of the base without causing the base or cabinet to come out of their anchored position or cause any permanent deformation. The manufacturer must supply certification by an independent testing laboratory or sealed by a Texas Licensed Professional Engineer. Provide the cabinet base with hardware for attachment to a concrete slab.
7. The traffic signal base must be permanently marked either by impress or by permanent ink with the manufacturer's model number and name or logo.
8. Seal the base to the concrete with a silicone caulk bead and fastened to the slab per manufacturer's instructions.

CONCRETE SLAB:

9. Traffic signal controller pad must be a portland cement concrete slab poured in place, must conform to the dimensions shown, and must be level.
10. Grade earthwork such that it is flush with the concrete pad on all four sides, unless otherwise shown on the plans. Subsidiary to ITEM 680, four inch rip rap may be used in lieu of earthwork. Slopes shall gradually contour to match plans.
11. Bond a #8 AWG copper ground wire and an 8 ft ground rod bonded to the reinforcing mesh by a suitable UL Listed clamp and terminated to the cabinet grounding bus for the purpose of providing a local ground for the electrical grounding conductor. The electrical grounding conductor specified in Item 680-3.A.4 is required and must be terminated to the cabinet ground bus.
12. Install a PVC sleeve to prevent the ground rod from direct embedment in the slab.
13. Provide welded wire mesh 6X6-W2.9 X W2.9 for reinforcement. Provide joints and splices in the mesh with a minimum 6-inch overlap. Center the mesh between top and bottom and provide a minimum 3 inch cover on the edges.
14. Provide Class B concrete minimum for the slab in accordance with Item 421. Construct the slab in accordance with Item 531.

CONDUITS:

15. Stub up and run 3-inch conduits through the slab to the various traffic signal poles and ground boxes as shown on the layouts. Install the number of conduits as shown on layouts plus two additional 3 inch conduits for future use. Terminate the conduits with a bushing between 2 and 4-inches above the slab.
16. Extend conduits for future use at least 18-inches from the edge of the slab, terminate underground with a coupling, and cap and seal so that the seal can be removed without damaging the coupling. This must also apply to unused telephone conduit.
17. Stub up two separate conduits through the slab from the electrical and telephone services. Run the conduit for the electrical feed directly to the electrical service enclosure. Run the conduit for the telephone line directly to the telephone service, usually located on the same pole as the electrical service. Telephone must not under any circumstance share a conduit with any other function.
18. Terminate electric and telephone conduits above the slab with a coupling. After the base is installed, extend the conduits above the top of the base and secure to the base using a steel one-hole strap or similar suitable substitute.

CONTROLLER CABINET:

19. Anchor the controller cabinet to the base using four stainless steel 1/2-13 NC bolts.
20. The silicone caulk bead specified in Item 680.3.B must be RTV 133.

PAYMENT:

21. Bid TS-CF as subsidiary to Item 680.

Texas Department of Transportation

Traffic Safety Division Standard

TRAFFIC SIGNAL CONTROLLER CABINET BASE AND PAD
TS-CF-21

FILE: ts-cf-21.dgn	DN:	CK:	DW:	CK:
©TxDOT October 2000	CONT	SECT	JOB	HIGHWAY
REVISIONS	XXXX	XX	XXX	XXXX
12-04 2-21	DIST	COUNTY		SHEET NO.
	AUS	COUNTY		403

DISCLAIMER:
The use of this standard is governed by the "Texas Engineering Practice Act". No warranty of any kind is made by TxDOT for any purpose whatsoever. TxDOT assumes no responsibility for the conversion of this standard to other formats or for incorrect results or damages resulting from its use.

DATE: 4/4/2023 1:59:48 PM
FILE: G:\TXC\Projects\City_RoundRock\8819-00_WyomingSprings_PSE\03_CADD\01_Shts\ma-dpd-20.dgn

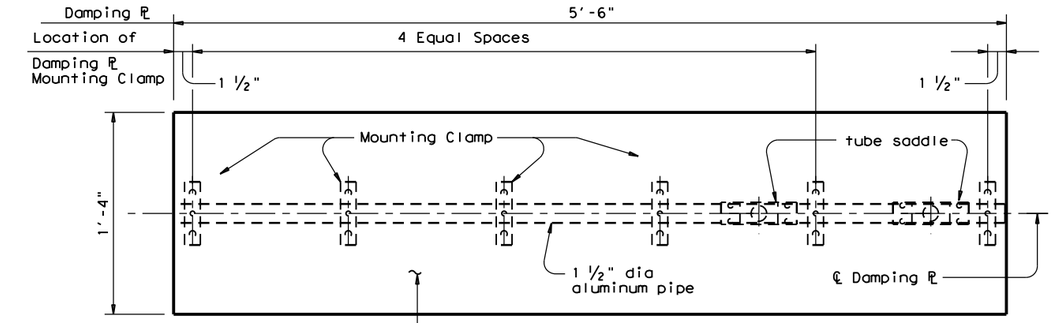

PLAN

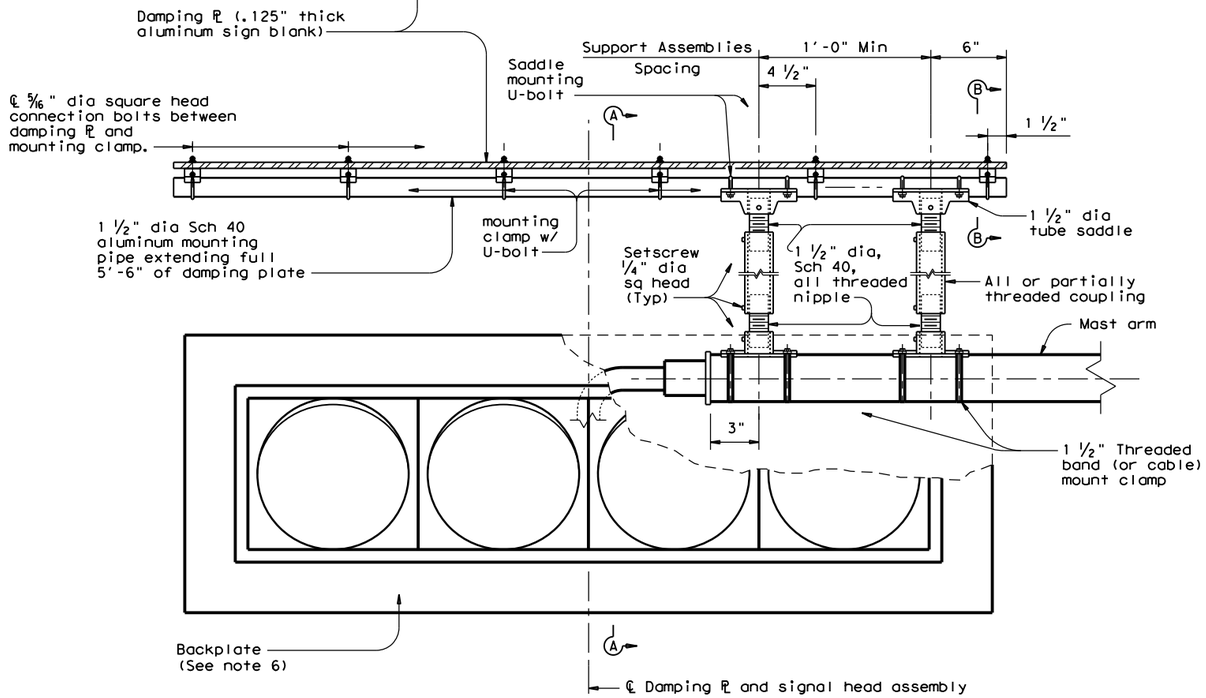

ELEVATION

DAMPING PLATE MOUNTING DETAILS

(Showing alternate placement of signal head)

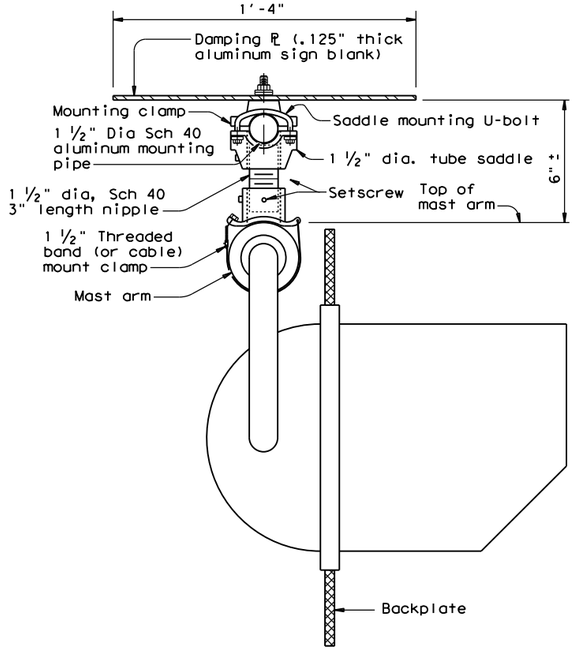

SECTION A-A

(Showing standard placement of signal head)
(Mounting clamp U-bolt is not shown for clarity)

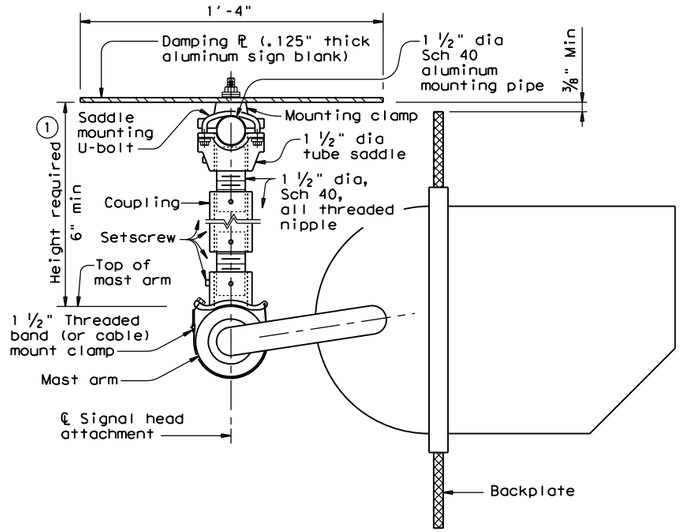

SECTION A-A

(Showing alternate placement of signal head)
(Mounting clamp U-bolt is not shown for clarity)

① Recommended supporting assemblies to achieve required height for horizontal section heads			
Height required	One nipple each length	Two nipples each length plus	One coupling each length
6"-6 ¾"	3"	-	-
7"-8 ½"	4"	-	-
9"-10 ½"	6"	-	-
11"-15 ½"	-	4"	5"
16"-24"	-	6"	10"

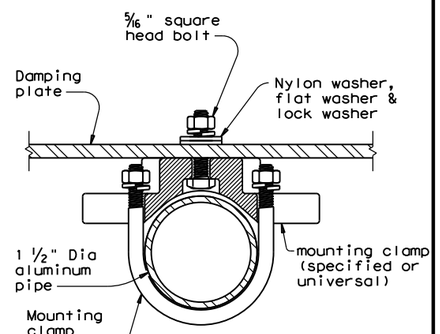

SECTION B-B

(Showing damping plate attachment)

GENERAL NOTES:

1. In accordance with the findings of TxDOT sponsored research, the installation of a damping plate in accordance with the details shown here at the end of signal mast arms of SMA and DMA standard structures reduces excessive harmonic vertical vibration, and thus fatigue damage. Any deviation from these details may reduce the effectiveness of this damping device.
2. Aluminum sign blank for damping plate will conform to Departmental Material Specifications DMS-7110. Materials for mast arm mounting clamp and tube saddle will be aluminum castings or aluminum alloys as in accordance with manufacturers' stipulations. Mounting pipe, pipe nipple and coupling will be aluminum alloy 6061-T6 or 6063-T6. Damping plate mounting clamp and u-bolt assemblies will conform to Standard sheet SMD(GEN). U-bolts for saddle mounting will have a minimum yield strength of 36 ksi.
3. Damping plate will be mounted horizontally. Position centerline of damping plate to align with centerline of mast arm or horizontal signal head assembly. Vertical clearance between signal head (with or without backing plate) and bottom of damping plate will be maintained as shown. The attachments shown here are examples only, other supporting details which meet both alignment and vertical clearance requirements are also acceptable.
4. Unless stipulated by the manufacturers, all steel parts will be galvanized finish in accordance with Standard Specification Item 445, "Galvanizing".
5. Contractor will verify applicable field dimensions before the installation.
6. Backplates are optional for traffic signals. When backplates are used, Backplates will have a 2-inch fluorescent yellow AASHTO Type B_{FL} or C_{FL} retroreflective border conforming to TxDOT DMS-8300 "Sign Face Materials." See Sheet TS-BP-20 for backplate details.

Texas Department of Transportation

Traffic Safety Division Standard

MAST ARM DAMPING PLATE DETAILS

MA-DPD-20

FILE: ma-dpd-20.dgn	DN: TxDOT	CK: TxDOT	DW: TxDOT	CK: TxDOT
©TxDOT January 2012	CONT	SECT	JOB	HIGHWAY
REVISIONS	XXXX	XX	XXX	XXXX
6-20	DIST	COUNTY		SHEET NO.
	AUS	COUNTY		404

DISCLAIMER:
The use of this standard is governed by the "Texas Engineering Practice Act". No warranty of any kind is made by TxDOT for any purpose whatsoever. TxDOT assumes no responsibility for the conversion of this standard to other formats or for incorrect results or damages resulting from its use.

DATE: 4/4/2023 1:59:55 PM
FILE: G:\TXC\Projects\City_RoundRock\8819-00_WyomingSprings_PSE\03_CADD\01_Sht\94_TS-BP-20.dgn

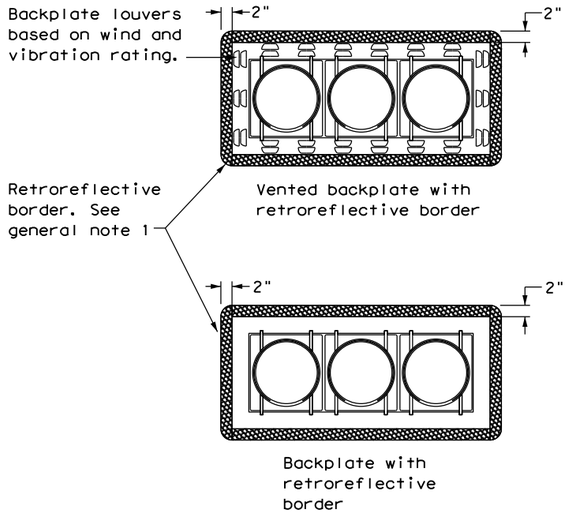

THREE-SECTION HEAD
HORIZONTAL OR VERTICAL

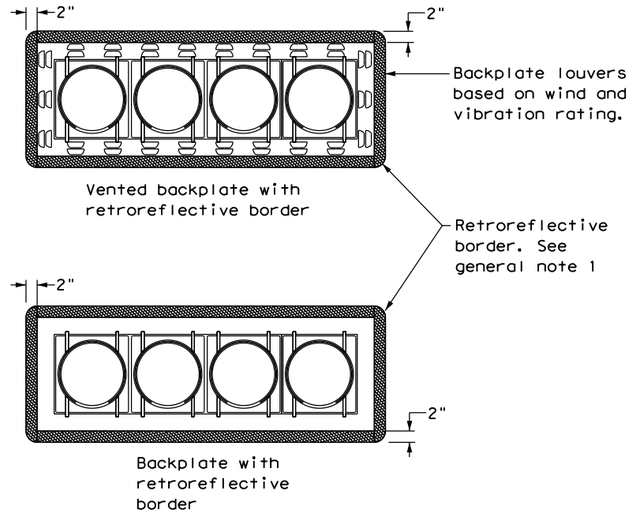

FOUR-SECTION HEAD
HORIZONTAL OR VERTICAL

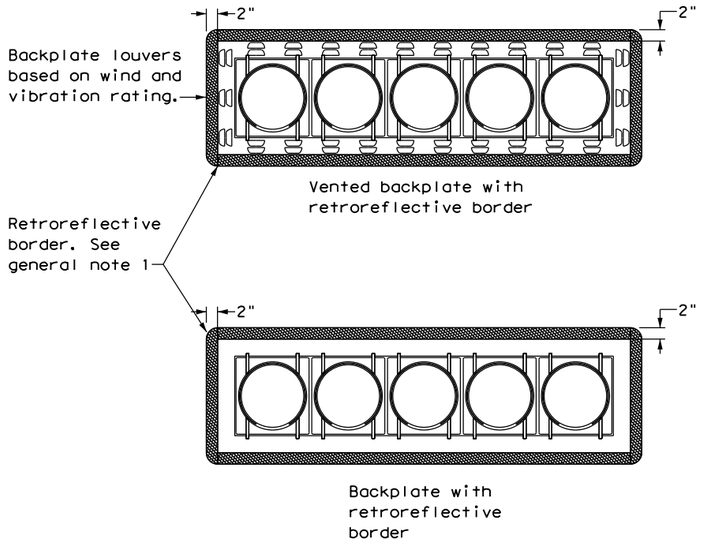

FIVE-SECTION HEAD
HORIZONTAL OR VERTICAL

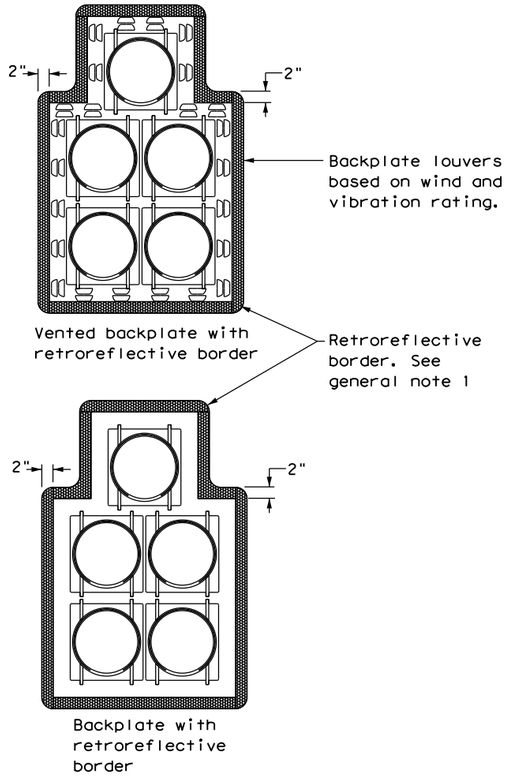

FIVE-SECTION HEAD
CLUSTER

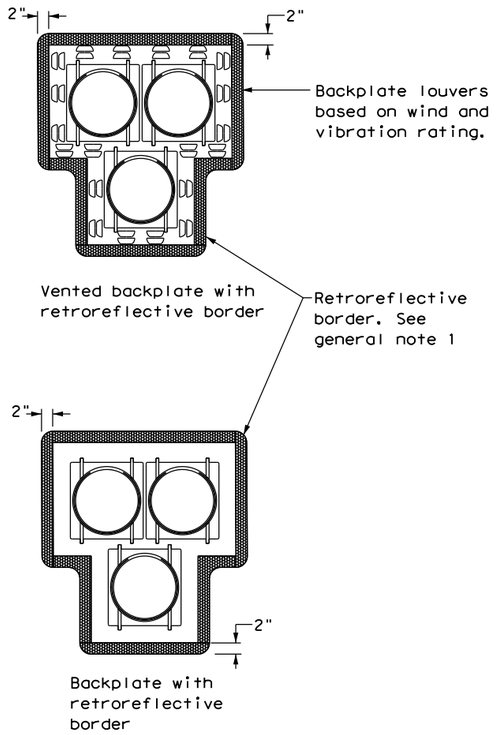

PEDESTRIAN HYBRID
BEACON

GENERAL NOTES:

1. Backplates are optional for traffic signals and pedestrian hybrid beacons. When backplates are used, a 2-inch wide fluorescent yellow AASHTO Type B_{FL} or C_{FL} retroreflective border conforming to TxDOT DMS-8300 is required. Place on all approaches when used.
2. Signal head and backplate compatability must be verified by the contractor prior to installation.
3. When using backplates on signal heads, venting is preferred to reduce cyclic vibration stress.
4. When a vented backplate is used, the retroreflective border must not be placed over the louvers.
5. This standard sheet applies to all signal heads with backplates, including but not limited to:
   - Pole mounted
   - Overhead mounted
   - Span wire mounted
   - Mast arm mounted
   - Vertical signal heads
   - Horizontal signal heads
   - Clustered signal heads
   - Pedestrian hybrid beacons

Texas Department of Transportation

Traffic Safety Division Standard

TRAFFIC SIGNAL HEAD WITH BACKPLATE

TS-BP-20

FILE: ts-bp-20.dgn	DN: TxDOT	CK: TxDOT	DW: TxDOT	CK: TxDOT
©TxDOT June 2020	CONT	SECT	JOB	HIGHWAY
REVISIONS	XXXX	XX	XXX	XXXX
	DIST	COUNTY		SHEET NO.
	AUS	COUNTY		405

GENERAL ELECTRICAL NOTES - ROADWAY LIGHTING

A. SCOPE: PROJECT INFORMATION SHOWN ON DRAWINGS CONSISTS OF ROADWAY, BRIDGE LIGHTING AND DATA CONDUIT. THE CONTRACTOR WILL FURNISH AND INSTALL ALL LABOR, MATERIAL, EQUIPMENT, TOOLS AND SERVICES NECESSARY AND INCIDENTAL FOR TWO NEW ELECTRICAL SERVICE ENTRANCES AND SERVICE SUPPORTS. LIGHTING AND POWER DISTRIBUTION CONDUIT SYSTEMS ASSOCIATED CONDUIT/FITTINGS, AND ALL OTHER ASSOCIATED APPURTENANCES AS NECESSARY AND INCIDENTAL TO THE COMPLETE AND FULLY OPERATIONAL ELECTRICAL SYSTEMS DIAGRAMMATICALLY REPRESENTED ON THESE PLANS, DESCRIBED IN TXDOT STANDARD SPECIFICATIONS AND AS LISTED IN THE PAY ITEMS.

B. ALL ROADWAY ILLUMINATION WORK SHOWN ON THESE DRAWINGS WILL CONFORM TO THE REQUIREMENTS OF THE CITY OF ROUND ROCK (CORR) DESIGN AND CONSTRUCTION STANDARDS. WHERE ITEMS ARE NOT EXPLICITY STATED WITHIN THE CORR STANDARDS, NEW WORK SHALL BE IN ACCORDANCE WITH THE TEXAS DEPARTMENT OF TRANSPORTATION "2017 STANDARD SPECIFICATIONS."

C. TXDOT SPECIFICATIONS SECTIONS APPLICABLE TO WORK SHOWN ON THESE DRAWINGS WILL INCLUDE, BUT NOT BE LIMITED TO:

1. ITEM 610: ROADWAY ILLUMINATION ASSEMBLIES
2. ITEM 616: PERFORMANCE TESTING OF LIGHTING SYSTEMS
3. ITEM 618: CONDUIT
4. ITEM 620: ELECTRICAL CONDUCTORS
5. ITEM 624: GROUND BOXES
6. ITEM 628: ELECTRICAL SERVICES
7. ITEM 402: TRENCH EXCAVATION PROTECTION
8. ITEM 416: DRILLED SHAFT FOUNDATIONS
9. ITEM 441: STEEL STRUCTURES
10. ITEM 447: STRUCTURAL BOLTING
11. ITEM 449: ANCHOR BOLTS

D. TXDOT STANDARD PLANS AND DETAILS APPLICABLE TO WORK AS SHOWN ON THESE DRAWINGS WILL INCLUDE, BUT NOT BE LIMITED TO:

1. ED(1)-14 ELECTRICAL DETAILS - CONDUIT
2. ED(2)-14 ELECTRICAL DETAILS - CONDUIT SUPPORT
3. ED(3)-14 ELECTRICAL DETAILS - CONDUCTORS
4. ED(4)-14 ELECTRICAL DETAILS - GROUND BOXES
5. ED(5)-14 ELECTRICAL DETAILS - SERVICE NOTES
6. ED(6)-14 ELECTRICAL DETAILS - SERVICE ENCLOSURE AND NOTES
7. ED(9)-14 ELECTRICAL DETAILS - SERVICE SUPPORT PEDESTAL SERVICE TYPE PS
8. RID(1)-20 ROADWAY ILLUMINATION DETAILS
9. RID(2)-20 ROADWAY ILLUMINATION DETAILS
10. RID(3)-20 ROADWAY ILLUMINATION DETAILS
11. RIP(1)-17 ROADWAY ILLUMINATION POLES
12. RIP(2)-17 ROADWAY ILLUMINATION POLES
13. RIP(3)-17 ROADWAY ILLUMINATION POLES
14. RIP(4)-17 ROADWAY ILLUMINATION POLES
15. BL(1-2) BRIDGE LIGHTING DETAILS
16. BL(2-2) BRIDGE LIGHTING DETAILS
17. ITS(27)-16 ITS CONDUIT TRENCH DETAILS (1 OF 2)
18. ITS(28)-16 ITS CONDUIT BORE AND STEEL CASING DETAILS (2 OF 2)
19. ITS(29)-16 ITS CONDUIT HANGER DETAILS
20. ITS(30)-16 STRUCTURE MOUNTED ITS CONDUIT
21. ITS(31)-16 PARAPET MOUNTED ITS CONDUIT AND TRANSITION BOX DETAIL
22. ITS(33)-16 ITS CONDUIT TRANSITION AT ABUTMENT
23. ITS(35)-16 ITS CONDUIT OBSTRUCTION CROSSING
24. ITS(36)-16 TYPICAL ITS DEVICE SITE LAYOUT
25. ITS(37)-16 ITS GROUND BOX DETAILS TYPE "1" WITH STEEL COVER (1 OF 2)
26. ITS(38)-17 ITS GROUND BOX DETAILS TYPE "1" WITH STEEL COVER (2 OF 2)

E. CONTRACTOR SHALL VERIFY ALL UNDERGROUND UTILITY LOCATIONS PRIOR TO CONSTRUCTING ALL POLE FOUNDATIONS.

F. COMPLY WITH ALL NATIONAL, FEDERAL, STATE, CITY, AND LOCAL CODES (I.E., 2017 NEC, ETC.) WITH AUTHORITIES HAVING JURISDICTION AND IN ACCORDANCE WITH CORR STANDARDS AND TXDOT SPECIFICATIONS. SECURE AND PAY FOR ALL NECESSARY PERMITS, LICENSES, AND INSPECTIONS AS REQUIRED BY LAW.

G. STUDY THE COMPLETE CONTRACT DOCUMENTS TO DETERMINE THE FULL SCOPE OF WORK AND TO IDENTIFY WORK PERFORMED BY OTHER TRADES. THE ELECTRICAL CONSTRUCTION WILL BE COORDINATED WITH THE WORK OF OTHER TRADES. EXAMINE THE SITE TO DETERMINE CONDITIONS THAT WILL AFFECT THE WORK AND INCLUDE ALL WORK RELATED TO THE SITE CONDITIONS IN THE BID PROPOSAL. PERFORM THE WORK WITH COMPETENT MECHANICS, SKILLED IN THEIR TRADES, TIMELY PLACING ALL MATERIALS AS THE CONSTRUCTION PROGRESSES.

H. EXISTING UTILITY LOCATIONS SHOWN ARE GENERALLY SCHEMATIC IN NATURE AND MAY NOT ACCURATELY REFLECT THE SIZE AND LOCATION OF EACH PARTICULAR UTILITY. CONTRACTOR WILL ASSUME RESPONSIBILITY FOR FACILITIES, WHETHER SHOWN OR NOT.

I. IT WILL BE THE RESPONSIBILITY OF THE CONTRACTOR TO:

1. PREVENT ANY DAMAGE TO PRIVATE PROPERTY AND PROPERTY OWNER'S POLES, FENCES,SHRUBS, ETC.
2. PROTECT ALL UNDERGROUND AND OVERHEAD UTILITIES.
3. NOTIFY ALL UTILITY COMPANIES AND FIELD VERIFY HORIZONTAL AND VERTICAL LOCATIONS OF ALL UTILITIES PRIOR TO START OF CONSTRUCTION
4. NOTIFY OWNER OF ANY POTENTIAL CONFLICTS THAT MAY EXIST BETWEEN THE EXISTING UTILITIES AND CONSTRUCTION PLANS.

J. THE CONTRACTOR WILL PROTECT EXISTING PROPERTY FROM DAMAGE. ANY DAMAGES THAT MAY OCCUR TO REAL PROPERTY OR EXISTING IMPROVEMENTS SHALL BE RESTORED BY THE CONTRACTOR TO AT LEAST THE SAME CONDITION THAT THE REAL PROPERTY OR EXISTING IMPROVEMENTS WERE IN PRIOR TO THE DAMAGES. THIS RESTORATION WILL BE SUBJECT TO THE RESPECTIVE OWNER'S APPROVAL. RESTORATION OF EXISTING CONDITIONS WILL NOT BE A BASIS FOR ADDITIONAL COMPENSATION TO THE CONTRACTOR.

K. THE CONTRACTOR WILL COORDINATE HIS WORK WITH THE CONSTRUCTION MANAGER, GENERAL CONTRACTOR, AND ALL OTHER TRADES, AND WILL CONTACT ALL UTILITY COMPANIES (I.E. ELECTRICAL, TELEPHONE, CABLE, ETC.) AS NECESSARY TO CONFIRM, SCHEDULE, AND COORDINATE ELECTRICAL SERVICE ENTRANCES, NEW SERVICE ENTRANCE SUPPORT STRUCTURES, AND NEW ILLUMINATION ASSEMBLIES AS INDICATED ON THESE DRAWINGS, WITH EXISTING SITE CONDITIONS, EXISTING UTILITIES AND ALL OTHER UTILITY COMPANY REQUIREMENTS.

L. PEDESTRIAN AND VEHICULAR TRAFFIC FLOW, SAFETY AND ACCESS WILL BE MAINTAINED DURING ALL PHASES OF CONSTRUCTION. CONTRACTOR WILL COORDINATE WITH OWNER FOR TRAFFIC ACCESS PLANNING, LIGHTING, AND OTHER PUBLIC SAFETY ISSUES AS REQUIRED BY OWNER. TRAFFIC FLOW AND ACCESS WILL BE MAINTAINED DURING ALL PHASES OF THE CONSTRUCTION. THE CONTRACTOR WILL ASSUME FULL RESPONSIBILITY FOR PUBLIC SAFETY IN THE CONSTRUCTION AREA DURING THE DURATION OF CONSTRUCTION ACTIVITIES.

M. SUBMIT MANUFACTURER'S PRODUCT DATA ON ALL MATERIAL PROPOSED FOR THE PROJECT. MATERIALS AND PRODUCTS OF MANUFACTURERS OTHER THAN THOSE SPECIFIED REQUIRE APPROVAL IN WRITING, SUBMIT SHOP DRAWINGS AND PRODUCT DATA FOR APPROVAL AND IN ACCORDANCE WITH ITEM 610 ROADWAY ILLUMINATION ASSEMBLIES.

N. THE CONTRACTOR WILL PROVIDE A CONTRACT GUARANTEE FOR ALL WORK SHOWN ON THESE DRAWINGS IN ACCORDANCE WITH THE TEXAS DEPARTMENT OF TRANSPORTATION "2017 STANDARD SPECIFICATIONS" AS REFERENCED HEREIN.

O. COORDINATE ALL ELECTRICAL SERVICE ENTRANCE REQUIREMENTS WITH ONCOR ELECTRIC PRIOR TO ANY CONSTRUCTION.
UTILITY CO. CONTACT: ALIZABETH GSATTENBAUER
(PHONE: 254-290-5245 EMAIL: ALIZABETH.JOBE@ONCOR.COM)

P. ANY BRANCH CIRCUITING ROUTED UNDER ROADWAY WILL BE INSTALLED IN CONDUIT SLEEVES THAT EXTEND A MINIMUM OF 3'-0" BEYOND PAVEMENT.

Q. STAMP ALL FINISHED CONCRETE WITH A LETTER 'E' STENCIL MARKING WHERE BRANCH CIRCUITING IS ROUTED UNDER WALKWAYS AND CONCRETE FINISHED AREAS.

R. ALL BRANCH CIRCUITS, CONDUITS, AND DUCT BANK SYSTEMS WILL BE GROUPED TOGETHER AND ROUTED BELOW GRADE TO THEIR RESPECTIVE TERMINATION POINTS, IN A SINGLE TRENCH, WHERE POSSIBLE.

S. THE ELECTRICAL CONTRACTOR SHALL BE RESPONSIBLE FOR ALL EXCAVATION, TRENCHING, AND BACK FILL REQUIRED FOR ALL ELECTRICAL WORK SHOWN ON PLAN DRAWINGS. CONDUIT AND RACEWAY SYSTEM ROUTING INDICATED IS DIAGRAMMATIC OR SCHEMATIC AND SHALL BE CONSIDERED AS RECOMMENDED ROUTING ONLY. EXACT TRENCH AND CONDUIT/RACEWAY SYSTEM ROUTING INDICATED SHALL BE FIELD COORDINATED AND VERIFIED WITH ALL CIVIL AND STRUCTURAL, DRAWINGS AND ALL OTHER TRADES PRIOR TO BEGINNING WORK. PROVIDE ALL EXCAVATION AND BACK FILL AS NECESSARY FOR THE INSTALLATION OF SPECIFIED WORK AND INCIDENTAL TO THE PAY ITEMS.

T. ALL BRANCH CIRCUITS/FEEDERS EXTENDED OR ROUTED UNDER EXISTING OR NEW SIDEWALKS, OR WALKWAYS, WILL BE TRENCHED TO A DEPTH OF 30" MINIMUM, BACK FILLED AND COMPACTED TO THE DENSITY OF THE SURROUNDING SOIL. ALL EXPOSED AND SURFACE MOUNTED CONDUIT WILL BE GALVANIZED RIGID STEEL.

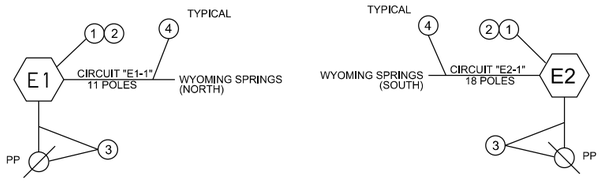

NUMBERED NOTES

1. ELECTRIC SERVICE ENCLOSURE: MILBANK METER PEDESTAL OR APPROVED EQUAL. REF: TXDOT ED(9)-14.
2. ELECTRIC SERVICE REF: TXDOT ED (5)-14
   TY D 120/240V 060 (NS) AL (E) PS (U).
3. RISE UP POLE PER POWER COMPANY REQUIREMENTS.
   SERVICE CONDUIT: 2" RMC OR 2" PVC SCHD 80 SERVICE CONDUCTORS: 3#6 THWN.
4. BRANCH CIRCUIT: 2 #8, #8G, 2" PVC. NORTH
   2 #8, #8G, 2" PVC. SOUTH

01 ELECTRICAL ONE-LINE DIAGRAM

SCALE: N.T.S.

GENERAL ELECTRICAL NOTES - ITS

A. VERTICAL AND HORIZONTAL SEPARATION BETWEEN TELECOMMUNICATION LINES AND POWER CONDUIT OR OTHER FOREIGN CONDUIT SHALL BE MAINTAINED. MINIMUM SEPARATION DISTANCES ARE:
   a. 3" CONCRETE OR
   b. 4" MASONRY OR
   c. 12" WELL-TAMPED EARTH

B. SECTION LENGTH OF DATA CONDUIT SHALL NOT EXCEED 600 FT. BETWEEN PULLING POINTS.

C. ITS CONDUIT BENDS SHALL BE A MINIMUM OF 24".

WYOMING SPRINGS
SEGMENT 1
ROUND ROCK, TX

ROUND ROCK TEXAS

halff
1920 BRIARWICK DR
AUSTIN, TX 78729
(512)777-4600
TBPELS FIRM #312

STATE OF TEXAS
PHILLIP ROBERT APPLEBAUM
68404
LICENSED
REGISTERED
PROFESSIONAL ENGINEER
04/07/2023

The seal appearing on this document was authorized by PHILLIP R. APPLEBAUM, P.E. 68404 on 04/07/2023. It is unlawful to distribute altered document without proper notification to the responsible engineer is an offense under the Texas Engineering Practice Act.
The record copy of this drawing is on file at the offices of Halff Associates, Texas 78081.
TBPELS FIRM #F-312

100% SUBMITTAL

Project No.:	36179.002
Issued:	04/07/2023
Drawn By:	ARR
Checked By:	PA
Scale:	AS NOTED

Sheet Title
ELECTRICAL
GENERAL NOTES

406

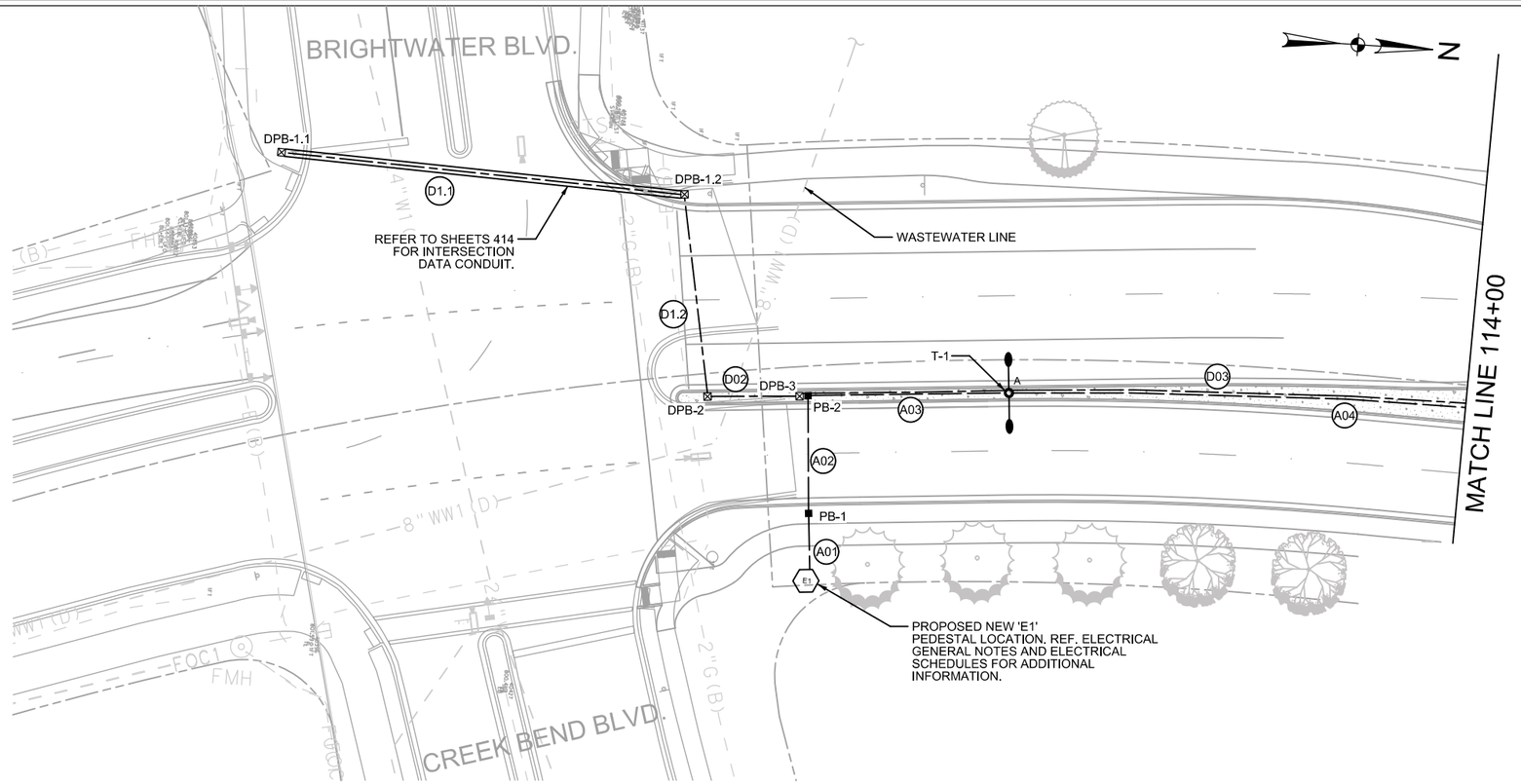

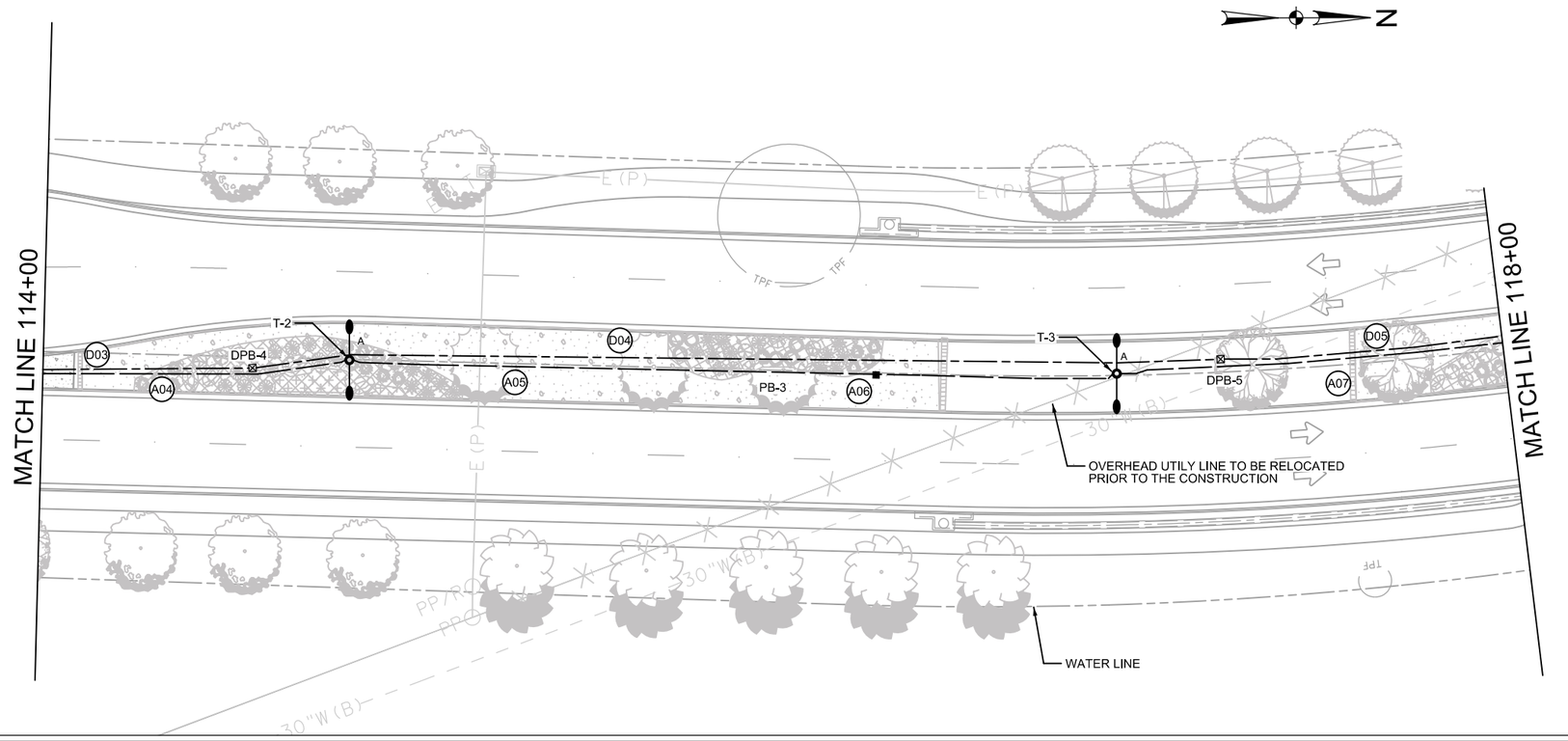

0 20 40 60 80

SCALE: 1"=40'

LEGEND

- ELECTRICAL CONDUIT
- DATA CONDUIT
- DOUBLE MAST ILLUMINATION POLE
- SINGLE MAST ILLUMINATION POLE
- U — UNDERPASS LIGHT
- PB- # — TY D ELECTRICAL PULL BOX PER TXDOT. PROVIDE WITH TRAFFIC RATED COVER. PB-1: TYPE-#
- DPB- # — TYPE 1-B DATA PULL BOX PER TXDOT. PROVIDE WITH TRAFFIC RATED COVER. DPB-1: TYPE-# 1,REFER TO ITS GROUND , BOX TXDOT STANDARD ITS (27)-16.
- SURFACE MOUNTED JUNCTION BOX.
- X00 — RUN NUMBER
- D00 — DATA RUN NUMBER
- E0 — SERVICE PEDESTAL

GENERAL NOTES:

A. REF. ILLUMINATION SCHEDULES 01, SHEET 414 FOR CONDUIT AND CONDUCTOR SCHEDULE SIZES AND TYPES.

B. REF. ILLUMINATION SCHEDULES 02, SHEET 415 FOR VOLTAGE DROP CALCULATIONS

C. REF: ILLUMINATION SCHEDULES 03, SHEET 416 FOR PHOTOMETRIC STATISTICS AND LIGHTING FIXTURES SCHEDULES.

D. STREET LIGHT FOUNDATIONS SHALL BE INSTALLED A MINIMUM OF 5' FROM WATER LINES.

E. CONDUITS SHALL BE BURIED AT A DEPTH OF 36" EXCEPT WHERE CONFLICT WITH FUTURE IMPROVEMENTS MAY OCCUR.

F. PROVIDE A MINIMUM 12" CLEARANCE FROM TOP OR BOTTOM OF ELECTRICAL/DATA CONDUIT TO OTHER UTILITIES.

G. CONDUIT ROUTING OVER THE ROADWAY AND BRIDGE IS DIAGRAMMATIC. REFER TO STRUCTURAL PLANS AND TXDOT DETAILS FOR DATA AND ELECTICAL CONDUIT MOUNTING THROUGH AND UNDER BRIDGE.

H. ELECTRICAL AND DATA CONDUIT TO SHARE THE SAME TRENCH WHERE CONDITIONS ALLOW.

I. CONTRACTOR SHALL FURNISH AND INSTALL ALL LIGHT FIXTURES.

J. PROVIDE A MINIMUM 3' HORIZONTAL CLEARANCE FROM ELECTRICAL AND DATA CONDUIT TO OTHER UTILITIES

WYOMING SPRINGS
SEGMENT 1
ROUND ROCK, TX

ROUND ROCK TEXAS

halff
13620 BRANTWICK DR
BLDG C, STE 100
AUSTIN, TX 78729
(512) 777-4800
TBPELS FIRM #312

STATE OF TEXAS
PHILLIP ROBERT APPLEBAUM
68404
REGISTERED PROFESSIONAL ENGINEER
04/07/2023

The seal appearing on this document was authorized by PHILLIP R. APPLEBAUM, PE# 68404 on 04-07-2023. Alteration of a sealed document without proper notification to the responsible engineer is an offense under the Texas Engineering Practice Act. The record copy of this drawing is on file at the offices of Halff Associates, Texas 75081. TBPELS FIRM #312

100% SUBMITTAL

Project No.:	36179.002
Issued:	04/07/2023
Drawn By:	ARR
Checked By:	PA
Scale:	AS NOTED

Sheet Title

ILLUMINATION PLAN
(1 OF 6)

407

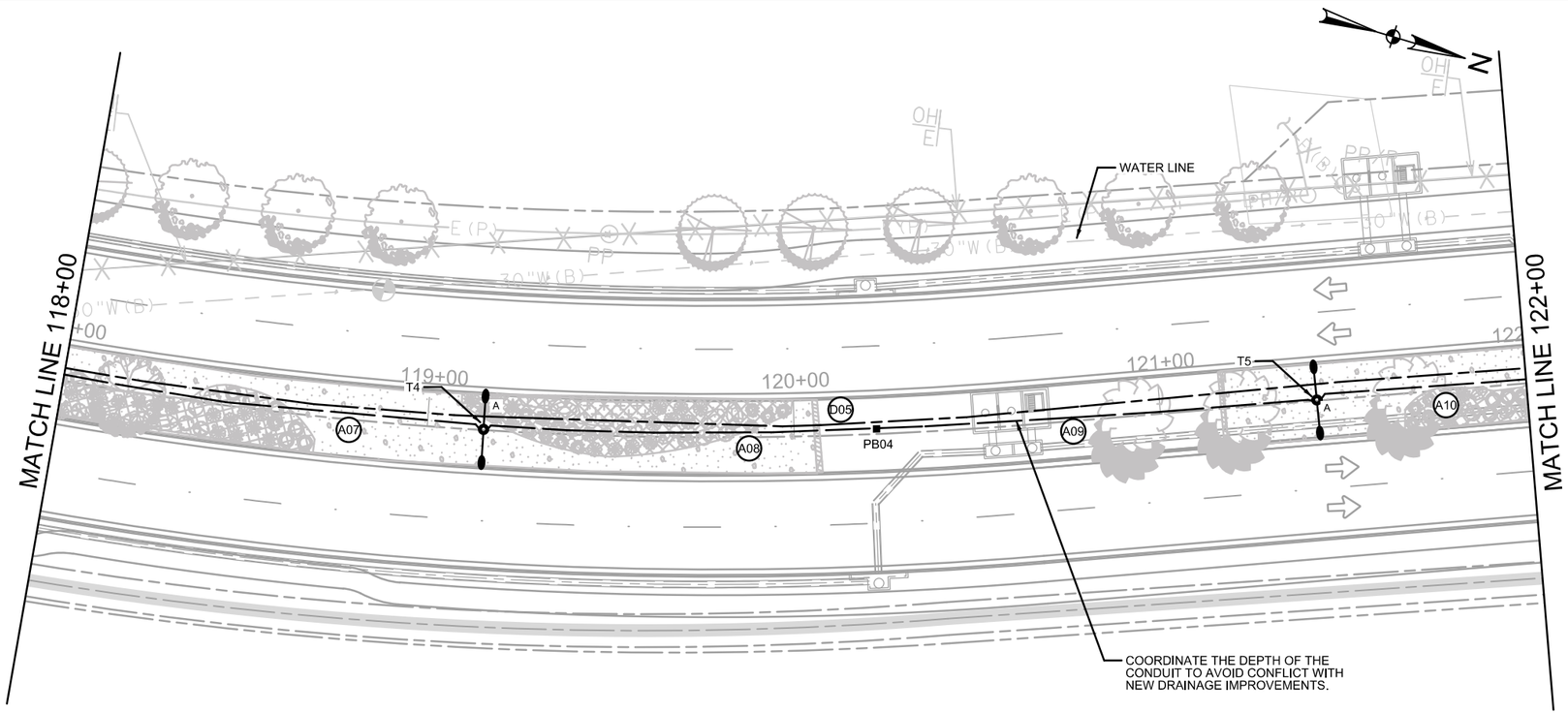

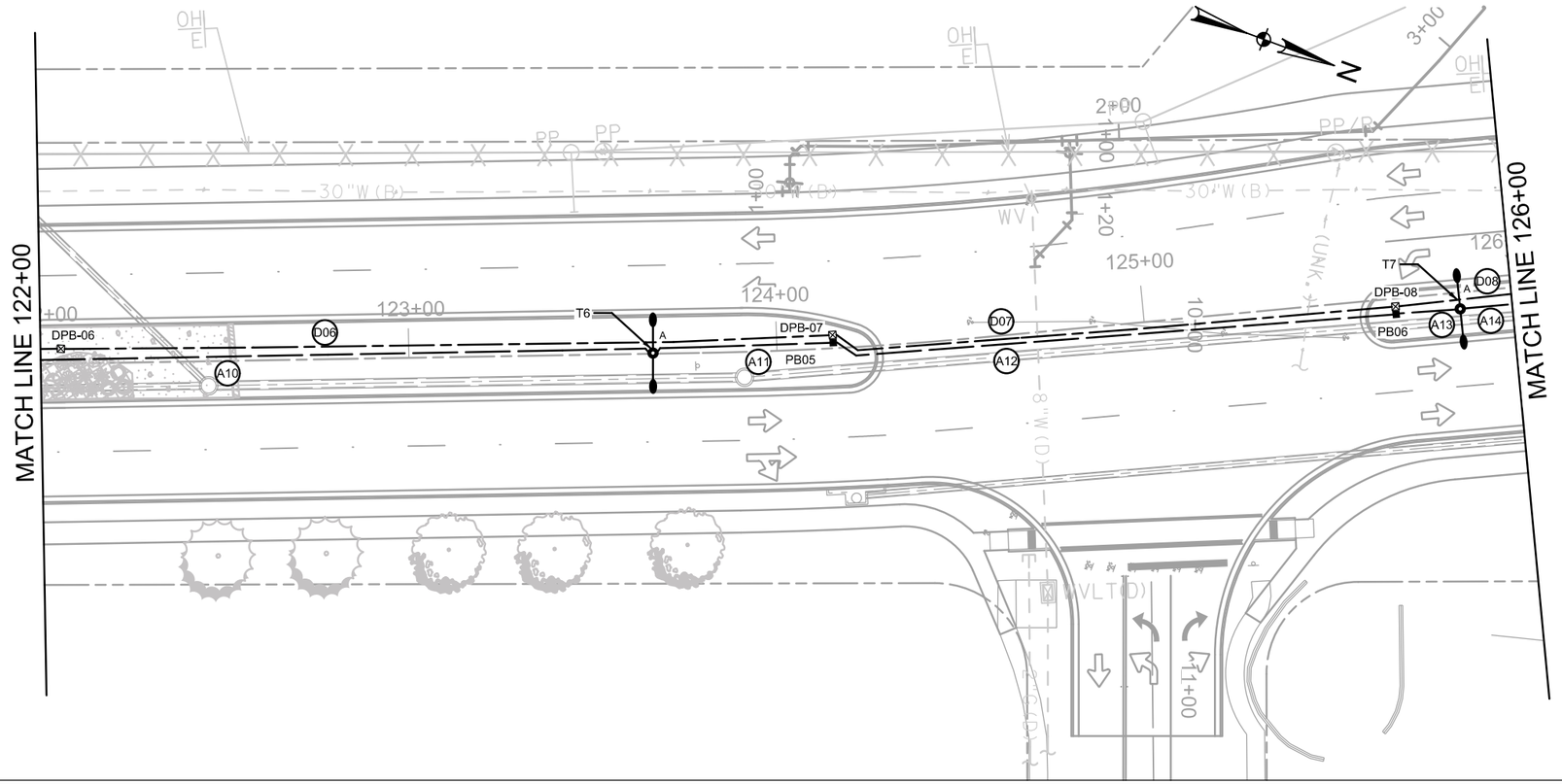

0 20 40 60 80

SCALE: 1"=40'

- ELECTRICAL CONDUIT
- DATA CONDUIT
- DOUBLE MAST ILLUMINATION POLE
- SINGLE MAST ILLUMINATION POLE
- U — UNDERPASS LIGHT
- PB- # — TY D ELECTRICAL PULL BOX PER TXDOT. PROVIDE WITH TRAFFIC RATED COVER. PB-1: TYPE-#
- DPB- # — TYPE 1-B DATA PULL BOX PER TXDOT. PROVIDE WITH TRAFFIC RATED COVER. DPB-1: TYPE-# 1,REFER TO ITS GROUND , BOX TXDOT STANDARD ITS (27)-16.
- SURFACE MOUNTED JUNCTION BOX.
- X00 — RUN NUMBER
- D00 — DATA RUN NUMBER
- E0 — SERVICE PEDESTAL

GENERAL NOTES:

A. REF. ILLUMINATION SCHEDULES 01, SHEET 414 FOR CONDUIT AND CONDUCTOR SCHEDULE SIZES AND TYPES.

B. REF. ILLUMINATION SCHEDULES 02, SHEET 415 FOR VOLTAGE DROP CALCULATIONS

C. REF: ILLUMINATION SCHEDULES 03, SHEET 416 FOR PHOTOMETRIC STATISTICS AND LIGHTING FIXTURES SCHEDULES.

D. STREET LIGHT FOUNDATIONS SHALL BE INSTALLED A MINIMUM OF 5' FROM WATER LINES.

E. CONDUITS SHALL BE BURIED AT A DEPTH OF 36" EXCEPT WHERE CONFLICT WITH FUTURE IMPROVEMENTS MAY OCCUR.

F. PROVIDE A MINIMUM 12" CLEARANCE FROM TOP OR BOTTOM OF ELECTRICAL/DATA CONDUIT TO OTHER UTILITIES.

G. CONDUIT ROUTING OVER THE ROADWAY AND BRIDGE IS DIAGRAMMATIC. REFER TO STRUCTURAL PLANS AND TXDOT DETAILS FOR DATA AND ELECTICAL CONDUIT MOUNTING THROUGH AND UNDER BRIDGE.

H. ELECTRICAL AND DATA CONDUIT TO SHARE THE SAME TRENCH WHERE CONDITIONS ALLOW.

I. CONTRACTOR SHALL FURNISH AND INSTALL ALL LIGHT FIXTURES.

J. PROVIDE A MINIMUM 3' HORIZONTAL CLEARANCE FROM ELECTRICAL AND DATA CONDUIT TO OTHER UTILITIES

WYOMING SPRINGS
SEGMENT 1
ROUND ROCK, TX

ROUND ROCK TEXAS

halff
13620 BRANTWICK DR
BLDG C, STE 100
AUSTIN, TX 78729
(512) 777-4800
TBPELS FIRM #312

STATE OF TEXAS
PHILLIP ROBERT APPLEBAUM
68404
REGISTERED PROFESSIONAL ENGINEER
04/07/2023

The seal appearing on this document was authorized by PHILLIP R. APPLEBAUM, PE# 68404 on 04-07-2023. Alteration of a sealed document without proper notification to the responsible engineer is an offense under the Texas Engineering Practice Act. Printed documents may be verified at the offices of Halff Associates, Texas 75081. TBPELS FIRM #F-312

100% SUBMITTAL

Project No.:	36179.002
Issued:	04/07/2023
Drawn By:	ARR
Checked By:	PA
Scale:	AS NOTED

Sheet Title
ILLUMINATION PLAN
(2 OF 6)

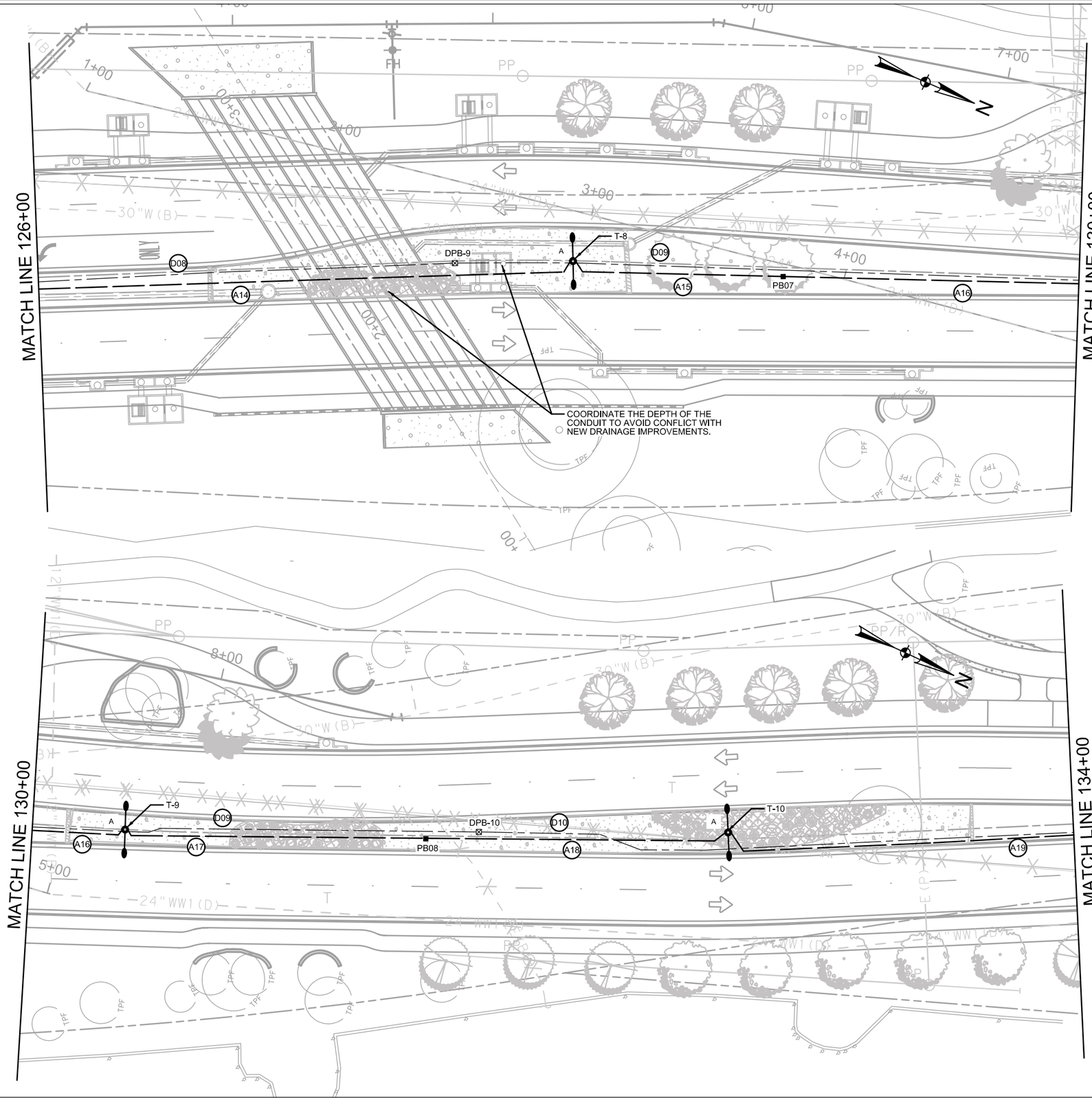

0 20 40 60 80

SCALE: 1"=40'

- ELECTRICAL CONDUIT
- DATA CONDUIT
- DOUBLE MAST ILLUMINATION POLE
- SINGLE MAST ILLUMINATION POLE
- U — UNDERPASS LIGHT
- PB- # — TY D ELECTRICAL PULL BOX PER TXDOT. PROVIDE WITH TRAFFIC RATED COVER. PB-1: TYPE-#
- DPB- # — TYPE 1-B DATA PULL BOX PER TXDOT. PROVIDE WITH TRAFFIC RATED COVER. DPB-1: TYPE-# 1,REFER TO ITS GROUND , BOX TXDOT STANDARD ITS (27)-16.
- SURFACE MOUNTED JUNCTION BOX.
- (X00) — RUN NUMBER
- (D00) — DATA RUN NUMBER
- (E0) — SERVICE PEDESTAL

GENERAL NOTES:

A. REF. ILLUMINATION SCHEDULES 01, SHEET 414 FOR CONDUIT AND CONDUCTOR SCHEDULE SIZES AND TYPES.

B. REF. ILLUMINATION SCHEDULES 02, SHEET 415 FOR VOLTAGE DROP CALCULATIONS

C. REF: ILLUMINATION SCHEDULES 03, SHEET 416 FOR PHOTOMETRIC STATISTICS AND LIGHTING FIXTURES SCHEDULES.

D. STREET LIGHT FOUNDATIONS SHALL BE INSTALLED A MINIMUM OF 5' FROM WATER LINES.

E. CONDUITS SHALL BE BURIED AT A DEPTH OF 36" EXCEPT WHERE CONFLICT WITH FUTURE IMPROVEMENTS MAY OCCUR.

F. PROVIDE A MINIMUM 12" CLEARANCE FROM TOP OR BOTTOM OF ELECTRICAL/DATA CONDUIT TO OTHER UTILITIES.

G. CONDUIT ROUTING OVER THE ROADWAY AND BRIDGE IS DIAGRAMMATIC. REFER TO STRUCTURAL PLANS AND TXDOT DETAILS FOR DATA AND ELECTICAL CONDUIT MOUNTING THROUGH AND UNDER BRIDGE.

H. ELECTRICAL AND DATA CONDUIT TO SHARE THE SAME TRENCH WHERE CONDITIONS ALLOW.

I. CONTRACTOR SHALL FURNISH AND INSTALL ALL LIGHT FIXTURES.

J. PROVIDE A MINIMUM 3' HORIZONTAL CLEARANCE FROM ELECTRICAL AND DATA CONDUIT TO OTHER UTILITIES

WYOMING SPRINGS
SEGMENT 1
ROUND ROCK, TX

ROUND ROCK TEXAS

halff
13620 BRANTWICK DR
BLDG C, STE 100
AUSTIN, TX 78729
(512) 777-4600
TBPELS FIRM #312

STATE OF TEXAS
PHILLIP ROBERT APPLEBAUM
68404
REGISTERED PROFESSIONAL ENGINEER
04/07/2023

The seal appearing on this document was authorized by PHILLIP R. APPLEBAUM, PE# 68404 on 04-07-2023. Alteration of a sealed document without proper notification to the responsible engineer is a violation under the Texas Engineering Practice Act. The record copy of this drawing is on file at the offices of Halff Associates, Texas 75081. TBPELS FIRM #F-312

100% SUBMITTAL

Project No.:	36179.002
Issued:	04/07/2023
Drawn By:	ARR
Checked By:	PA
Scale:	AS NOTED

Sheet Title
ILLUMINATION PLAN
(3 OF 6)

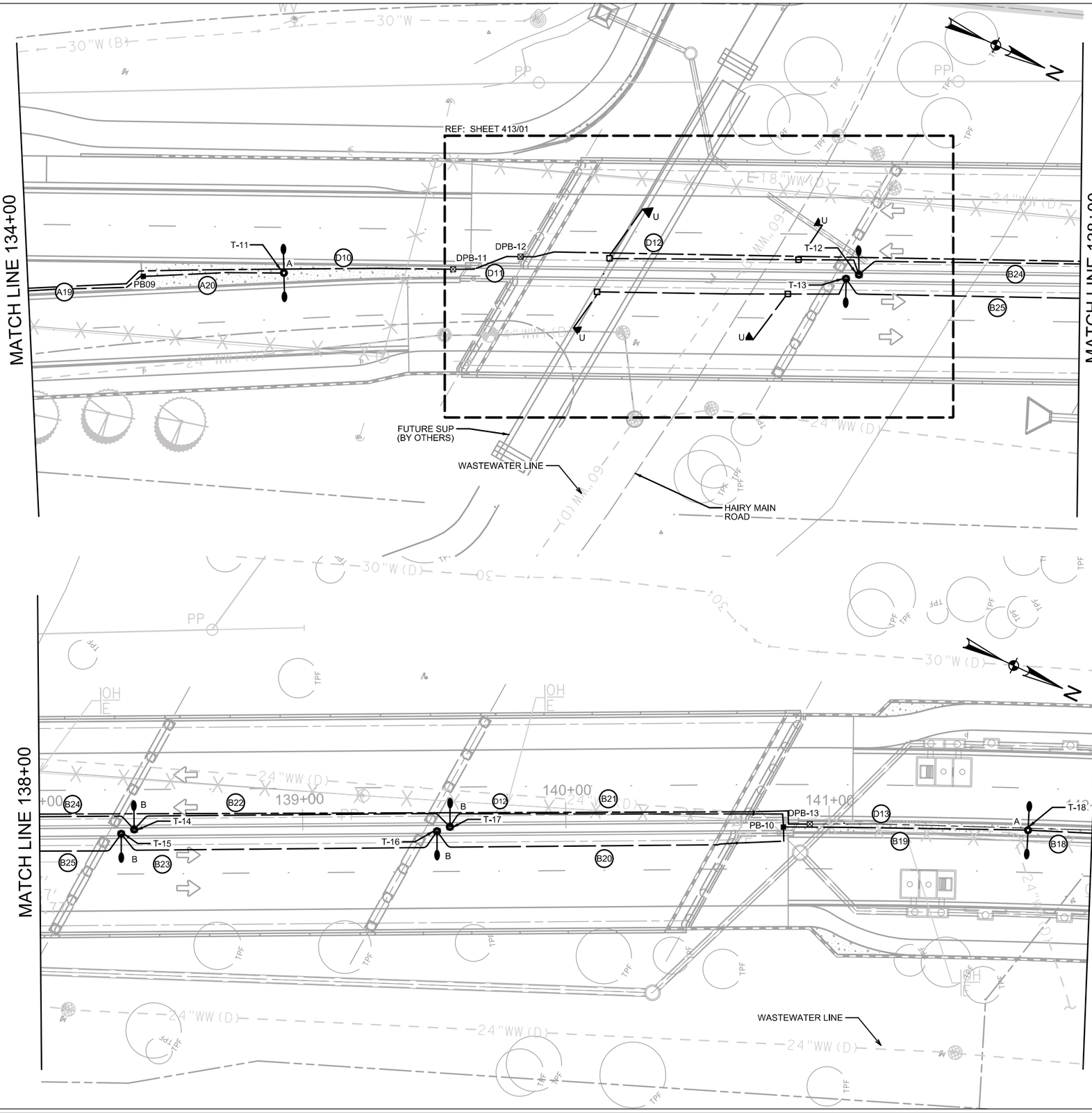

0 20 40 60 80

SCALE: 1"=40'

- ELECTRICAL CONDUIT
- DATA CONDUIT
- DOUBLE MAST ILLUMINATION POLE
- SINGLE MAST ILLUMINATION POLE
- U — UNDERPASS LIGHT
- PB- # — TY D ELECTRICAL PULL BOX PER TXDOT. PROVIDE WITH TRAFFIC RATED COVER. PB-1: TYPE-#
- DPB- # — TYPE 1-B DATA PULL BOX PER TXDOT. PROVIDE WITH TRAFFIC RATED COVER. DPB-1: TYPE-# 1,REFER TO ITS GROUND , BOX TXDOT STANDARD ITS (27)-16.
- SURFACE MOUNTED JUNCTION BOX.
- X00 — RUN NUMBER
- D00 — DATA RUN NUMBER
- E0 — SERVICE PEDESTAL

GENERAL NOTES:

A. REF. ILLUMINATION SCHEDULES 01, SHEET 414 FOR CONDUIT AND CONDUCTOR SCHEDULE SIZES AND TYPES.

B. REF. ILLUMINATION SCHEDULES 02, SHEET 415 FOR VOLTAGE DROP CALCULATIONS

C. REF: ILLUMINATION SCHEDULES 03, SHEET 416 FOR PHOTOMETRIC STATISTICS AND LIGHTING FIXTURES SCHEDULES.

D. STREET LIGHT FOUNDATIONS SHALL BE INSTALLED A MINIMUM OF 5' FROM WATER LINES.

E. CONDUITS SHALL BE BURIED AT A DEPTH OF 36" EXCEPT WHERE CONFLICT WITH FUTURE IMPROVEMENTS MAY OCCUR.

F. PROVIDE A MINIMUM 12" CLEARANCE FROM TOP OR BOTTOM OF ELECTRICAL/DATA CONDUIT TO OTHER UTILITIES.

G. CONDUIT ROUTING OVER THE ROADWAY AND BRIDGE IS DIAGRAMMATIC. REFER TO STRUCTURAL PLANS AND TXDOT DETAILS FOR DATA AND ELECTICAL CONDUIT MOUNTING THROUGH AND UNDER BRIDGE.

H. ELECTRICAL AND DATA CONDUIT TO SHARE THE SAME TRENCH WHERE CONDITIONS ALLOW.

I. CONTRACTOR SHALL FURNISH AND INSTALL ALL LIGHT FIXTURES.

J. PROVIDE A MINIMUM 3' HORIZONTAL CLEARANCE FROM ELECTRICAL AND DATA CONDUIT TO OTHER UTILITIES

WYOMING SPRINGS
SEGMENT 1
ROUND ROCK, TX

ROUND ROCK TEXAS

halff
13620 BRIARWICK DR
BLDG C, STE 100
AUSTIN, TX 78729
(512) 777-4600
TBPELS FIRM #312

STATE OF TEXAS
PHILLIP ROBERT APPLEBAUM
98404
REGISTERED
PROFESSIONAL ENGINEER
04/07/2023

The seal appearing on this document was authorized by Phillip Applebaum, P.E. PE# 98404 on 04-07-2023. Alteration of a sealed document without proper notification to the responsible engineer is an offense under the Texas Engineering Practice Act. The record copy of this drawing is on file at the offices of Halff Associates, Texas 7508?. TBPELS FIRM #F-312

100% SUBMITTAL

Project No.:	36179.002
Issued:	04/07/2023
Drawn By:	ARR
Checked By:	PA
Scale:	AS NOTED

Sheet Title
ILLUMINATION PLAN
(4 OF 6)

410

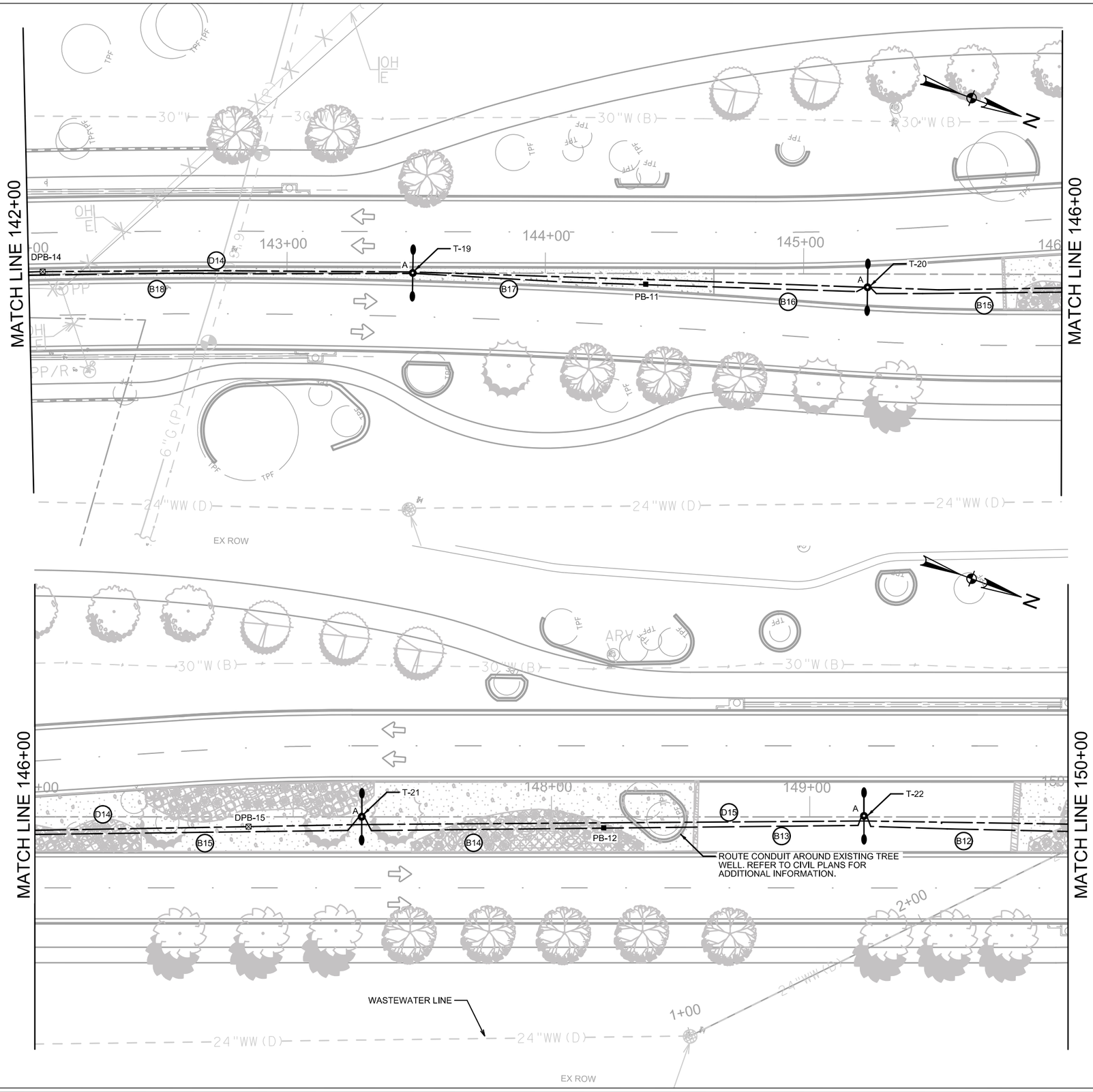

0 20 40 60 80

SCALE: 1"=40'

- ELECTRICAL CONDUIT
- DATA CONDUIT
- DOUBLE MAST ILLUMINATION POLE
- SINGLE MAST ILLUMINATION POLE
- U — UNDERPASS LIGHT
- PB- # — TY D ELECTRICAL PULL BOX PER TXDOT. PROVIDE WITH TRAFFIC RATED COVER. PB-1: TYPE-#
- DPB- # — TYPE 1-B DATA PULL BOX PER TXDOT. PROVIDE WITH TRAFFIC RATED COVER. DPB-1: TYPE-# 1,REFER TO ITS GROUND , BOX TXDOT STANDARD ITS (27)-16.
- SURFACE MOUNTED JUNCTION BOX.
- X00 — RUN NUMBER
- D00 — DATA RUN NUMBER
- E0 — SERVICE PEDESTAL

GENERAL NOTES:

A. REF. ILLUMINATION SCHEDULES 01, SHEET 414 FOR CONDUIT AND CONDUCTOR SCHEDULE SIZES AND TYPES.

B. REF. ILLUMINATION SCHEDULES 02, SHEET 415 FOR VOLTAGE DROP CALCULATIONS

C. REF: ILLUMINATION SCHEDULES 03, SHEET 416 FOR PHOTOMETRIC STATISTICS AND LIGHTING FIXTURES SCHEDULES.

D. STREET LIGHT FOUNDATIONS SHALL BE INSTALLED A MINIMUM OF 5' FROM WATER LINES.

E. CONDUITS SHALL BE BURIED AT A DEPTH OF 36" EXCEPT WHERE CONFLICT WITH FUTURE IMPROVEMENTS MAY OCCUR.

F. PROVIDE A MINIMUM 12" CLEARANCE FROM TOP OR BOTTOM OF ELECTRICAL/DATA CONDUIT TO OTHER UTILITIES.

G. CONDUIT ROUTING OVER THE ROADWAY AND BRIDGE IS DIAGRAMMATIC. REFER TO STRUCTURAL PLANS AND TXDOT DETAILS FOR DATA AND ELECTICAL CONDUIT MOUNTING THROUGH AND UNDER BRIDGE.

H. ELECTRICAL AND DATA CONDUIT TO SHARE THE SAME TRENCH WHERE CONDITIONS ALLOW.

I. CONTRACTOR SHALL FURNISH AND INSTALL ALL LIGHT FIXTURES.

J. PROVIDE A MINIMUM 3' HORIZONTAL CLEARANCE FROM ELECTRICAL AND DATA CONDUIT TO OTHER UTILITIES

WYOMING SPRINGS
SEGMENT 1
ROUND ROCK, TX

ROUND ROCK TEXAS

halff
13620 BRAKMICK DR
BLDG C, STE 100
AUSTIN, TX 78729
(512) 777-4600
TBPELS FIRM #312

STATE OF TEXAS
PHILLIP ROBERT APPLEBAUM
68404
REGISTERED PROFESSIONAL ENGINEER
04/07/2023

The seal appearing on this document was authorized by PHILLIP R. APPLEBAUM, PE# 68404 on 04-07-2023. Alteration of a sealed document without proper notification to the responsible engineer is an offense under the Texas Engineering Practice Act. This document was issued by Halff Associates, The offices of Halff Associates, Texas 75081. TBPELS FIRM #F-312

100% SUBMITTAL

Project No.:	36179.002
Issued:	04/07/2023
Drawn By:	ARR
Checked By:	PA
Scale:	AS NOTED

Sheet Title
ILLUMINATION PLAN
(5 OF 6)

411

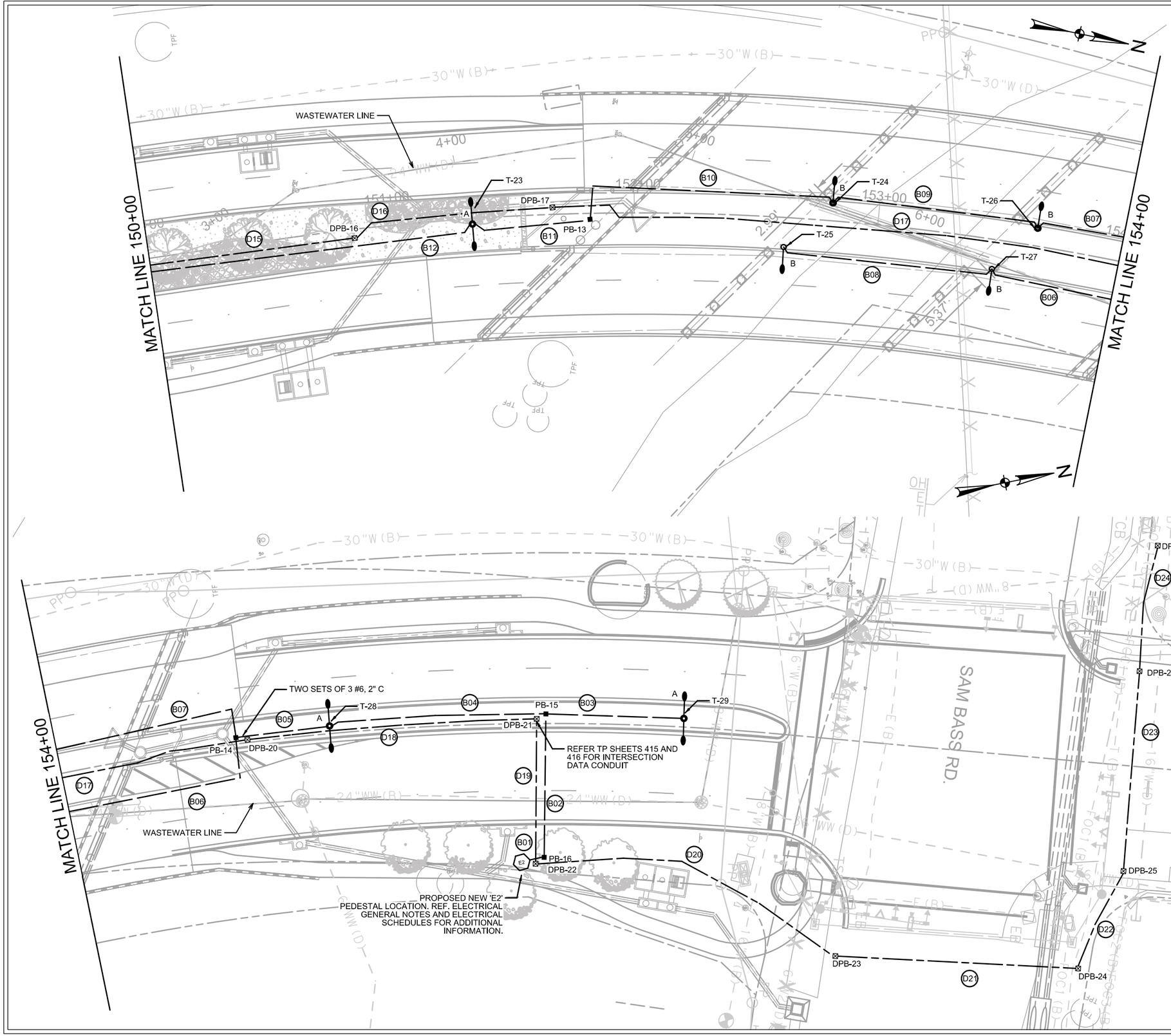

0 20 40 60 80

SCALE: 1"=40'

ELECTRICAL CONDUIT

DATA CONDUIT

DOUBLE MAST ILLUMINATION POLE

SINGLE MAST ILLUMINATION POLE

U — UNDERPASS LIGHT

PB- # — TY D ELECTRICAL PULL BOX PER TXDOT. PROVIDE WITH TRAFFIC RATED COVER. PB-1: TYPE-#

DPB- # — TYPE 1-B DATA PULL BOX PER TXDOT. PROVIDE WITH TRAFFIC RATED COVER. DPB-1: TYPE-# 1,REFER TO ITS GROUND , BOX TXDOT STANDARD ITS (27)-16.

SURFACE MOUNTED JUNCTION BOX.

X00 — RUN NUMBER

D00 — DATA RUN NUMBER

E0 — SERVICE PEDESTAL

GENERAL NOTES:

A. REF. ILLUMINATION SCHEDULES 01, SHEET 414 FOR CONDUIT AND CONDUCTOR SCHEDULE SIZES AND TYPES.

B. REF. ILLUMINATION SCHEDULES 02, SHEET 415 FOR VOLTAGE DROP CALCULATIONS

C. REF: ILLUMINATION SCHEDULES 03, SHEET 416 FOR PHOTOMETRIC STATISTICS AND LIGHTING FIXTURES SCHEDULES.

D. STREET LIGHT FOUNDATIONS SHALL BE INSTALLED A MINIMUM OF 5' FROM WATER LINES.

E. CONDUITS SHALL BE BURIED AT A DEPTH OF 36" EXCEPT WHERE CONFLICT WITH FUTURE IMPROVEMENTS MAY OCCUR.

F. PROVIDE A MINIMUM 12" CLEARANCE FROM TOP OR BOTTOM OF ELECTRICAL/DATA CONDUIT TO OTHER UTILITIES.

G. CONDUIT ROUTING OVER THE ROADWAY AND BRIDGE IS DIAGRAMMATIC. REFER TO STRUCTURAL PLANS AND TXDOT DETAILS FOR DATA AND ELECTICAL CONDUIT MOUNTING THROUGH AND UNDER BRIDGE.

H. ELECTRICAL AND DATA CONDUIT TO SHARE THE SAME TRENCH WHERE CONDITIONS ALLOW.

I. CONTRACTOR SHALL FURNISH AND INSTALL ALL LIGHT FIXTURES.

J. PROVIDE A MINIMUM 3' HORIZONTAL CLEARANCE FROM ELECTRICAL AND DATA CONDUIT TO OTHER UTILITIES

WYOMING SPRINGS
SEGMENT 1
ROUND ROCK, TX

ROUND ROCK TEXAS

halff
13620 BRIARWICK DR
BLDG C, STE 100
AUSTIN, TX 78729
(512) 777-4600
TBPELS FIRM #312

STATE OF TEXAS
PHILLIP ROBERT APPLEBAUM
68404
REGISTERED PROFESSIONAL ENGINEER
04/07/2023

The seal appearing on this document was authorized by PHILLIP R. APPLEBAUM, PE# 68404 on 04-07-2023. Alteration of a sealed document without proper notification to the responsible engineer is an offense under the Texas Engineering Practice Act. The record copy of this drawing is on file at the offices of Halff Associates, Texas 75081. TBPELS FIRM #F-312

100% SUBMITTAL

Project No.:	36179.002
Issued:	04/07/2023
Drawn By:	ARR
Checked By:	PA
Scale:	AS NOTED
Sheet Title	ILLUMINATION PLAN (6 OF 6)

412

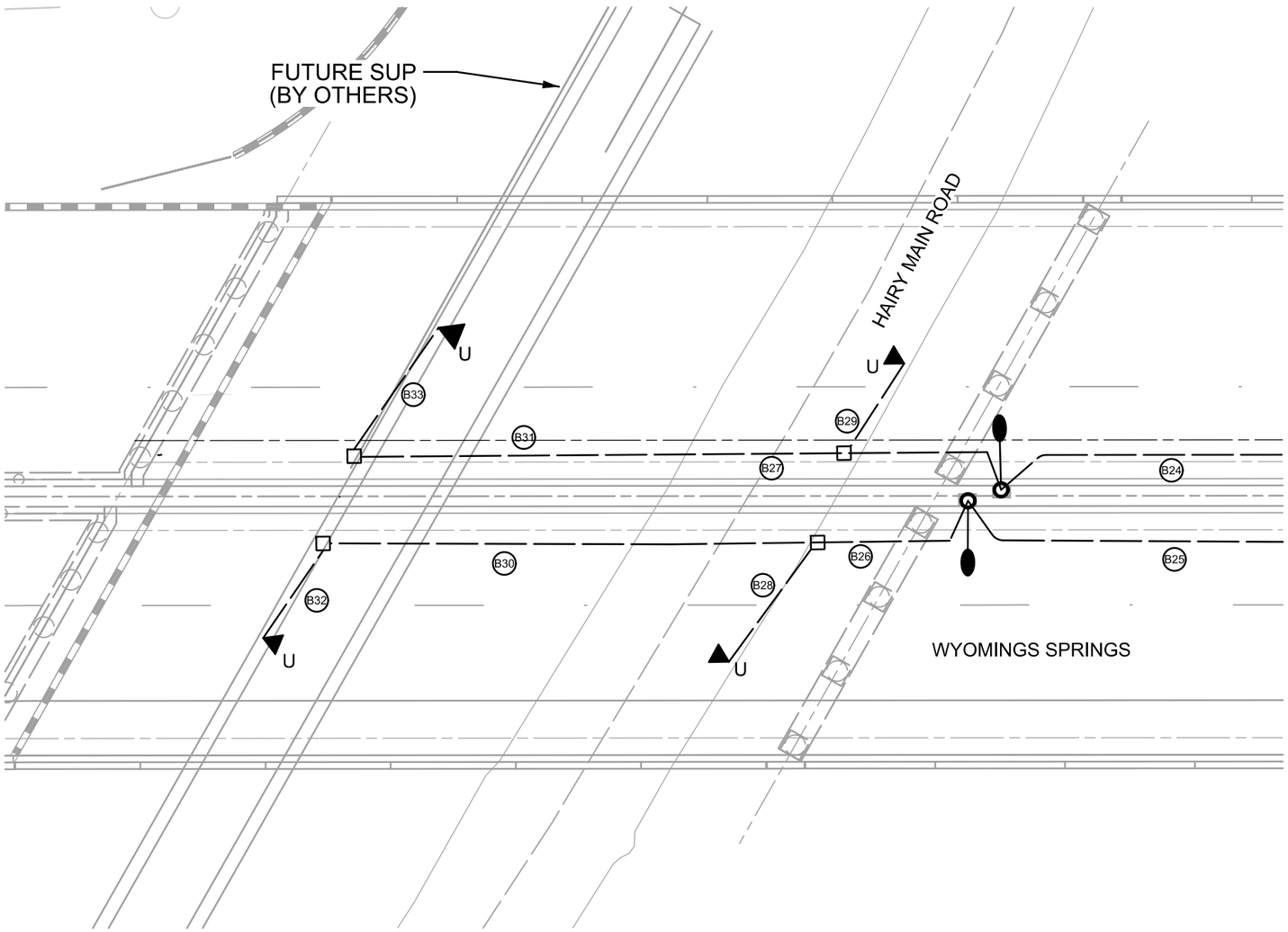

N

0 10 20 30 40
SCALE: 1"=20'

LEGEND

- ELECTRICAL CONDUIT
- DATA CONDUIT
- DOUBLE MAST ILLUMINATION POLE
- SINGLE MAST ILLUMINATION POLE
- U — UNDERPASS LIGHT
- PB- # — TY D ELECTRICAL PULL BOX PER TXDOT. PROVIDE WITH TRAFFIC RATED COVER. PB-1: TYPE-#
- DPB- # — TYPE 1-B DATA PULL BOX PER TXDOT. PROVIDE WITH TRAFFIC RATED COVER. DPB-1: TYPE-# 1,REFER TO ITS GROUND , BOX TXDOT STANDARD ITS (27)-16.
- SURFACE MOUNTED JUNCTION BOX.
- X00 — RUN NUMBER
- D00 — DATA RUN NUMBER
- E0 — SERVICE PEDESTAL

GENERAL NOTES:

A. REF. ILLUMINATION SCHEDULES 01, SHEET 414 FOR CONDUIT AND CONDUCTOR SCHEDULE SIZES AND TYPES.

B. REF. ILLUMINATION SCHEDULES 02, SHEET 415 FOR VOLTAGE DROP CALCULATIONS

C. REF: ILLUMINATION SCHEDULES 03, SHEET 416 FOR PHOTOMETRIC STATISTICS AND LIGHTING FIXTURES SCHEDULES.

D. STREET LIGHT FOUNDATIONS SHALL BE INSTALLED A MINIMUM OF 5' FROM WATER LINES.

E. CONDUITS SHALL BE BURIED AT A DEPTH OF 36" EXCEPT WHERE CONFLICT WITH FUTURE IMPROVEMENTS MAY OCCUR.

F. PROVIDE A MINIMUM 12" CLEARANCE FROM TOP OR BOTTOM OF ELECTRICAL/DATA CONDUIT TO OTHER UTILITIES.

G. CONDUIT ROUTING OVER THE ROADWAY AND BRIDGE IS DIAGRAMMATIC. REFER TO STRUCTURAL PLANS AND TXDOT DETAILS FOR DATA AND ELECTICAL CONDUIT MOUNTING THROUGH AND UNDER BRIDGE.

H. ELECTRICAL AND DATA CONDUIT TO SHARE THE SAME TRENCH WHERE CONDITIONS ALLOW.

I. CONTRACTOR SHALL FURNISH AND INSTALL ALL LIGHT FIXTURES.

J. PROVIDE A MINIMUM 3' HORIZONTAL CLEARANCE FROM ELECTRICAL AND DATA CONDUIT TO OTHER UTILITIES

WYOMING SPRINGS
SEGMENT 1
ROUND ROCK, TX

ROUND ROCK TEXAS

halff
13620 BRANTWICK DR
BLDG C, STE 100
AUSTIN, TX 78729
(512) 777-4600
TBPELS FIRM #312

STATE OF TEXAS
PHILLIP ROBERT APPLEBAUM
95404
REGISTERED
PROFESSIONAL ENGINEER
04/07/2023

The seal appearing on this document was authorized by Phillip Robert Applebaum, P.E. PE# 95404 on 04-07-2023. Alteration of a sealed document without proper notification to the responsible engineer is an offense under the Texas Engineering Practice Act. The record copy of this drawing is on file at the offices of Halff Associates, Texas 7508?. TBPELS FIRM #? ??

100% SUBMITTAL

Project No.:	36179.002
Issued:	04/07/2023
Drawn By:	ARR
Checked By:	PA
Scale:	AS NOTED

Sheet Title
BRUSHY CREEK UNDERPASS ILLUMINATION PLAN

413

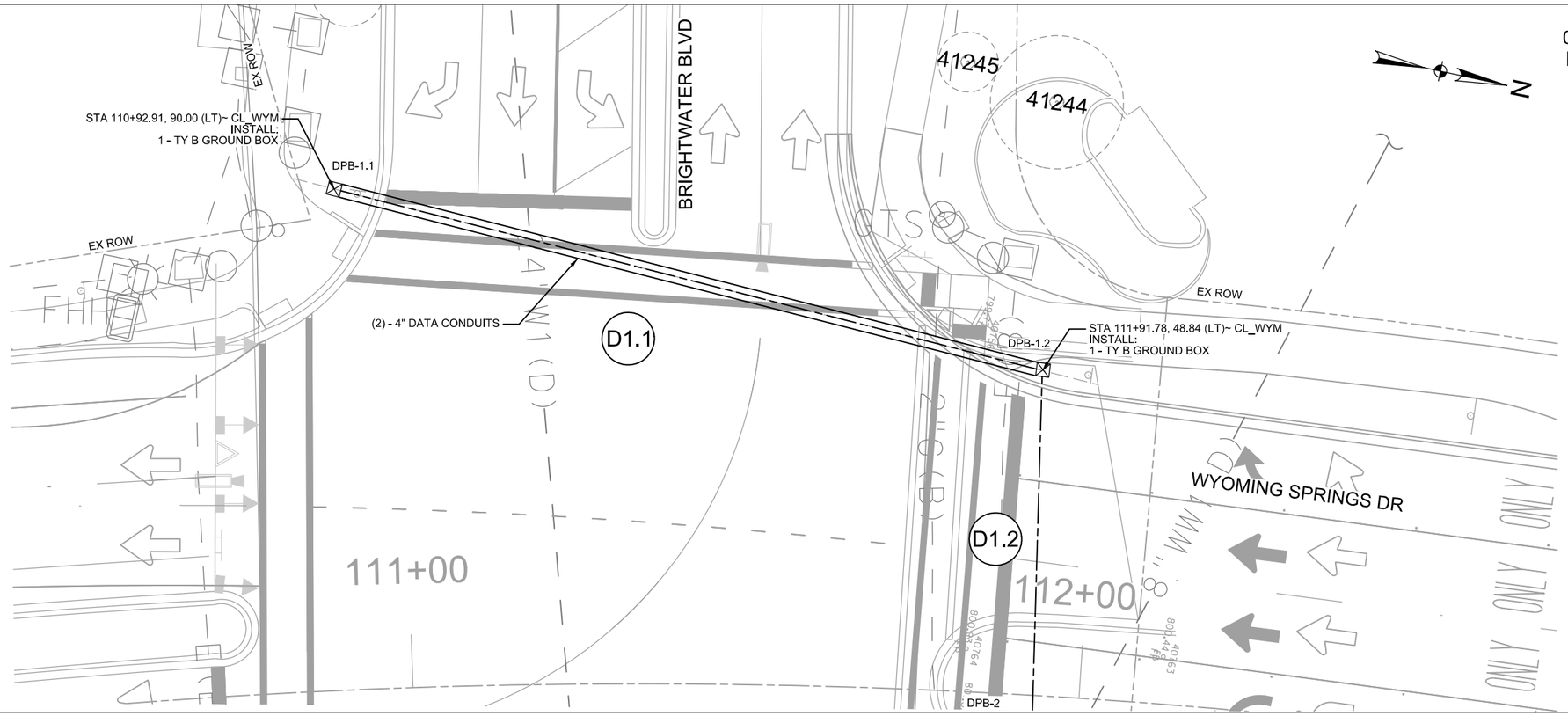

0 10 20 30 40

SCALE: 1"=20'

N

LEGEND

- DIRECTION OF TRAFFIC
- EXIST. ROW
- EXIST. PROPERTY LINE
- PROP ROW
- 1+00 ROAD CENTERLINE
- TRAFFIC SIGNAL
- PROP GROUND BOX (NTS)
- PROP DATA CONDUIT

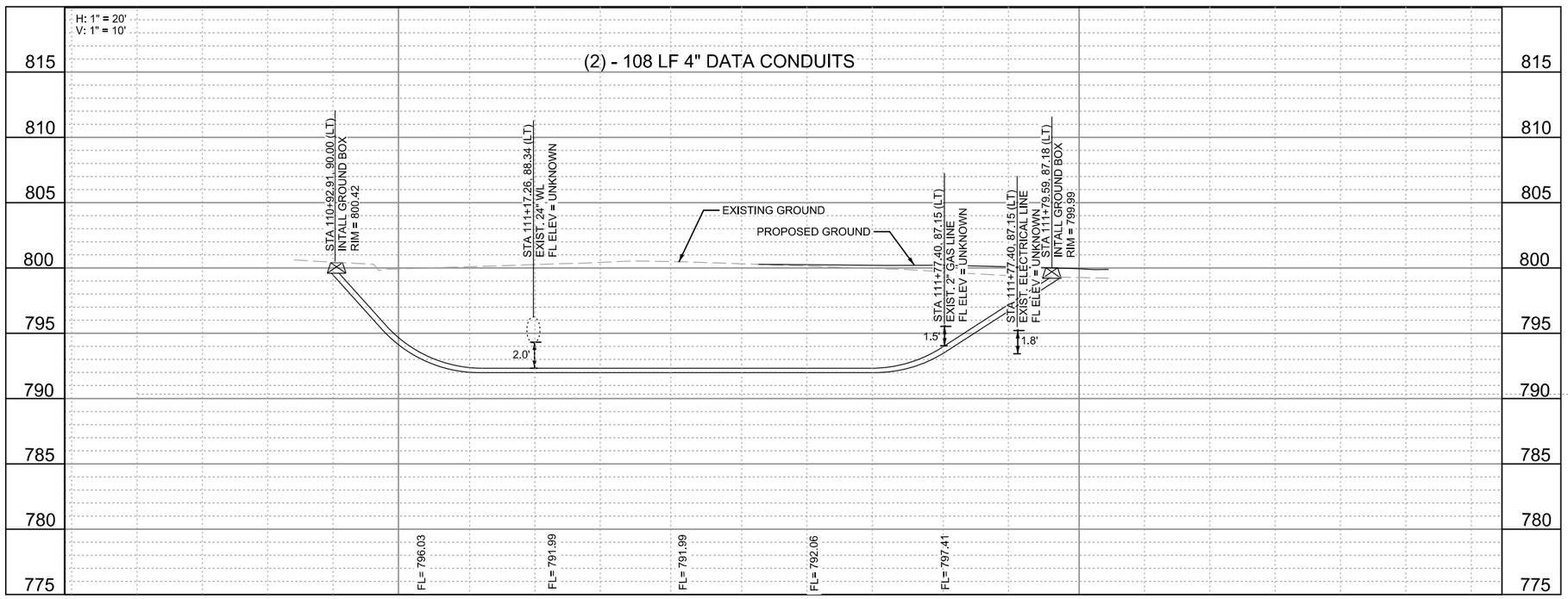

NOTES:

1. CONTRACTOR TO CONFIRM ALL UTILITY CROSSING FLOWLINES PRIOR TO CONTRUCTION. COORDINATE WITH ENGINEER IF FLOWLINES DIFFER FROM ESTIMATED DEPTHS PRIOR TO BORING.

WYOMING SPRINGS
SEGMENT 1
ROUND ROCK, TX

ROUND ROCK TEXAS

halff
13620 BRANTWICK DR
BLDG C, STE 100
AUSTIN, TX 78729
(512) 777-4600
TBPELS FIRM #312

Revision No.	Date	Description

F-312 5/5/23
STATE OF TEXAS
JEFFREY L. NAGY
133255
LICENSED
PROFESSIONAL ENGINEER

100% SUBMITTAL

Project No.:	36179.002
Issued:	5/2/2023
Drawn By:	JN
Checked By:	SG
Scale:	AS NOTED

Sheet Title
DATA CONDUIT
PLAN AND PROFILE
(1 OF 3)

414
Sheet Number

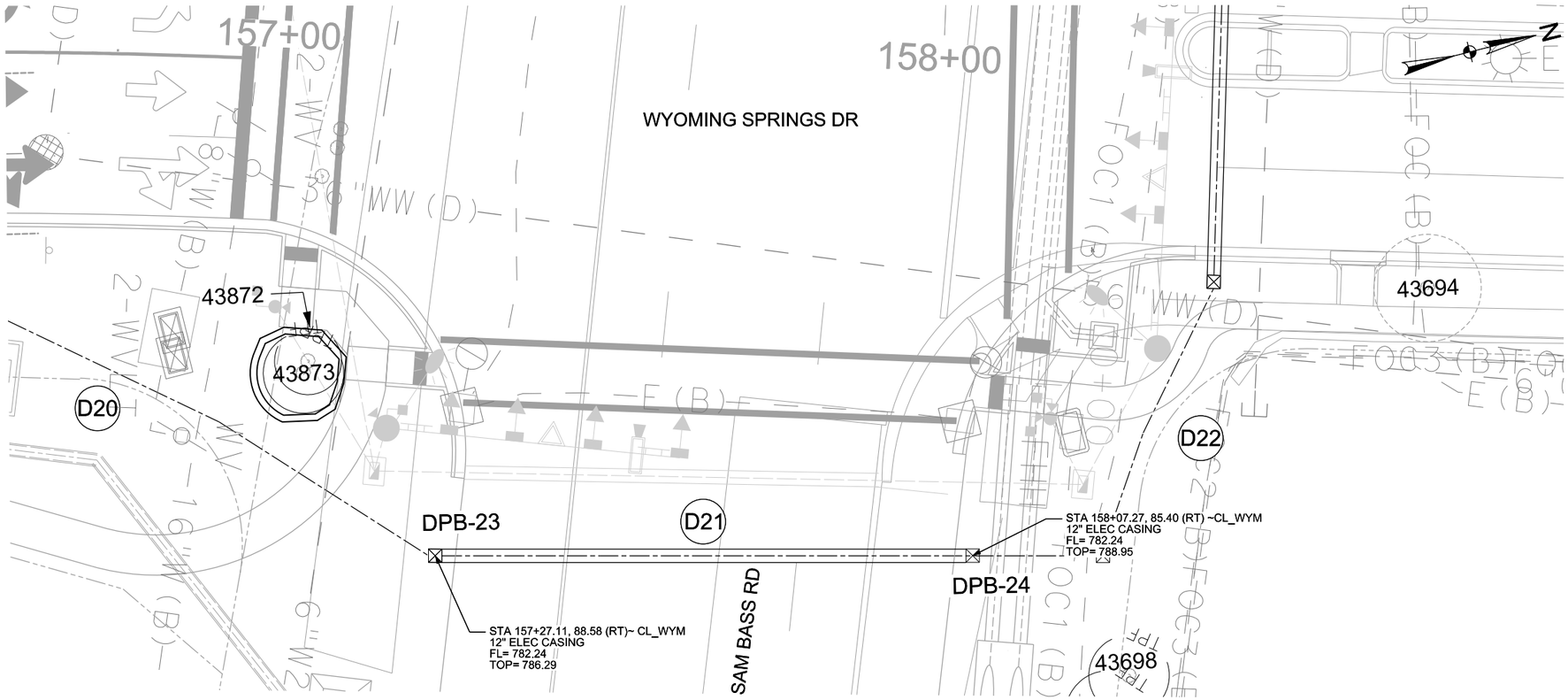

0 10 20 30 40

SCALE: 1"=20'

LEGEND

- ELECTRICAL CONDUIT
- DATA CONDUIT
- DOUBLE MAST ILLUMINATION POLE
- SINGLE MAST ILLUMINATION POLE
- U — UNDERPASS LIGHT
- PB- # — TY D ELECTRICAL PULL BOX PER TXDOT. PROVIDE WITH TRAFFIC RATED COVER. PB-1: TYPE-#
- DPB- # — TYPE 1-B DATA PULL BOX PER TXDOT. PROVIDE WITH TRAFFIC RATED COVER. DPB-1: TYPE-# 1,REFER TO ITS GROUND , BOX TXDOT STANDARD ITS (27)-16. JN
- SURFACE MOUNTED JUNCTION BOX.
- X00 — RUN NUMBER
- D00 — DATA RUN NUMBER
- E0 — SERVICE PEDESTAL

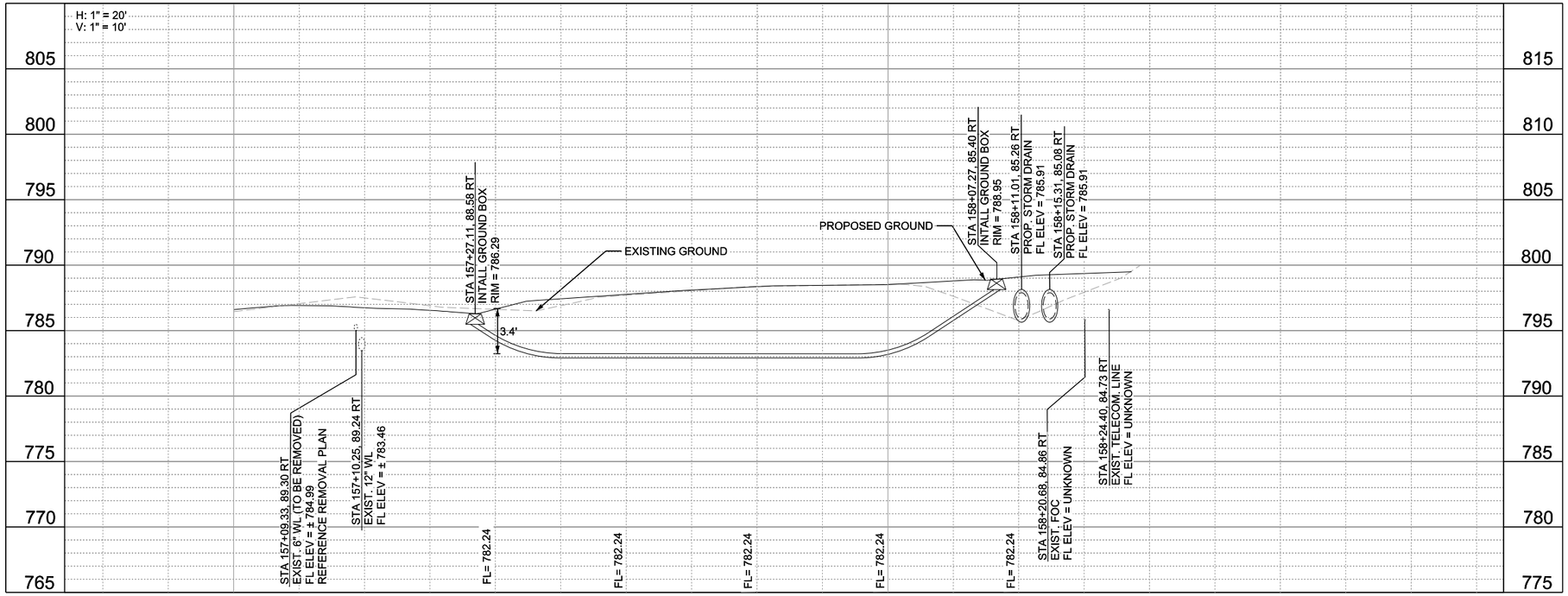

NOTES:

1. CONTRACTOR TO CONFIRM ALL UTILITY CROSSING FLOWLINES PRIOR TO CONTRUCTION.COORDINATE WITH ENGINEER IF FLOWLINES DIFFER FROM ESTIMATED DEPTHS PRIOR TO BORING.

WYOMING SPRINGS
SEGMENT 1
ROUND ROCK, TX

ROUND ROCK TEXAS

halff
13620 BRANTWICK DR
BLDG C, STE 100
AUSTIN, TX 78729
(512) 777-4600
TBPELS FIRM #312

Revision No.	Date	Description

F-312 4/5/23
STATE OF TEXAS
JEFFREY L. NAGY
133255
LICENSED PROFESSIONAL ENGINEER

100% SUBMITTAL

Project No.:	36179.002
Issued:	
Drawn By:	SG
Checked By:	JN
Scale:	AS NOTED

Sheet Title
DATA CONDUIT PLAN AND PROFILE (2 OF 3)

415
Sheet Number

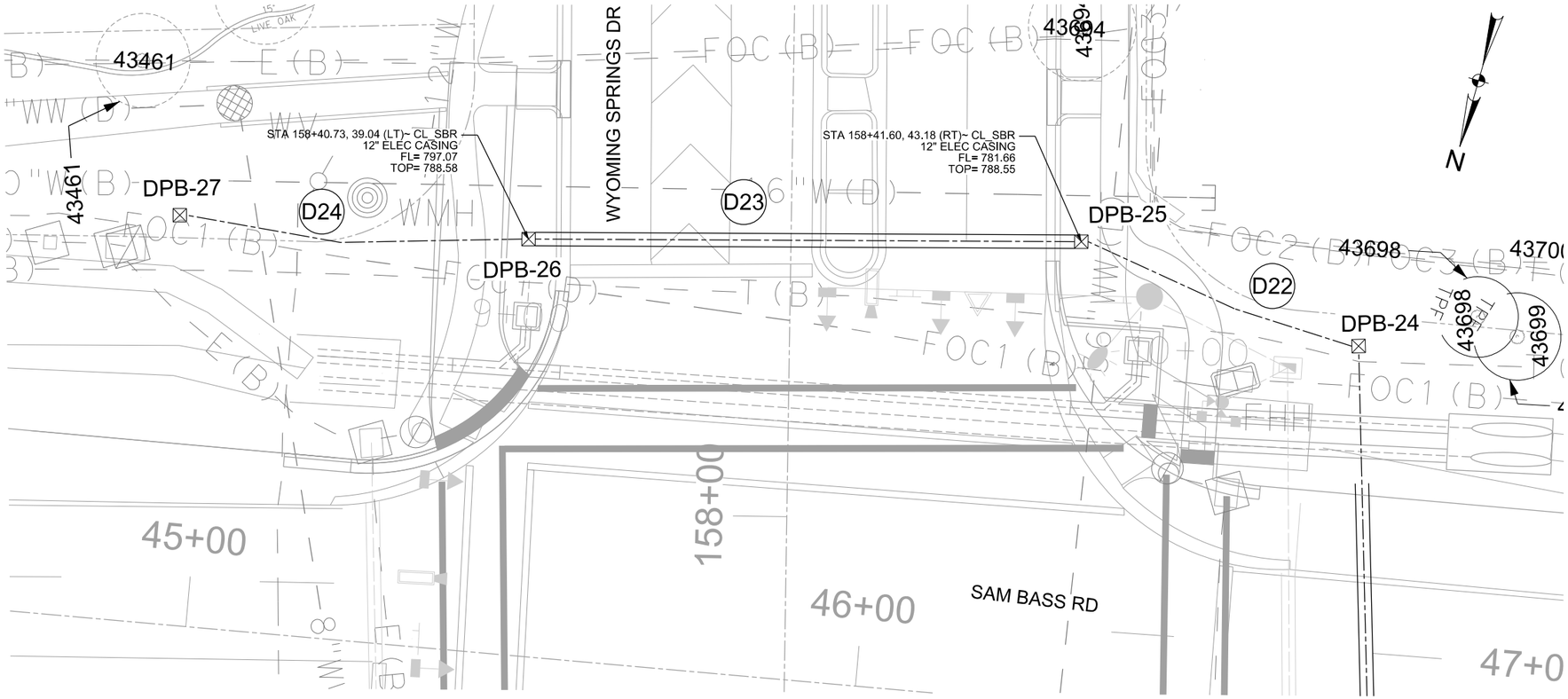

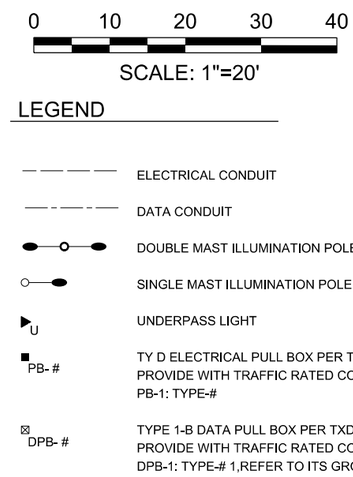

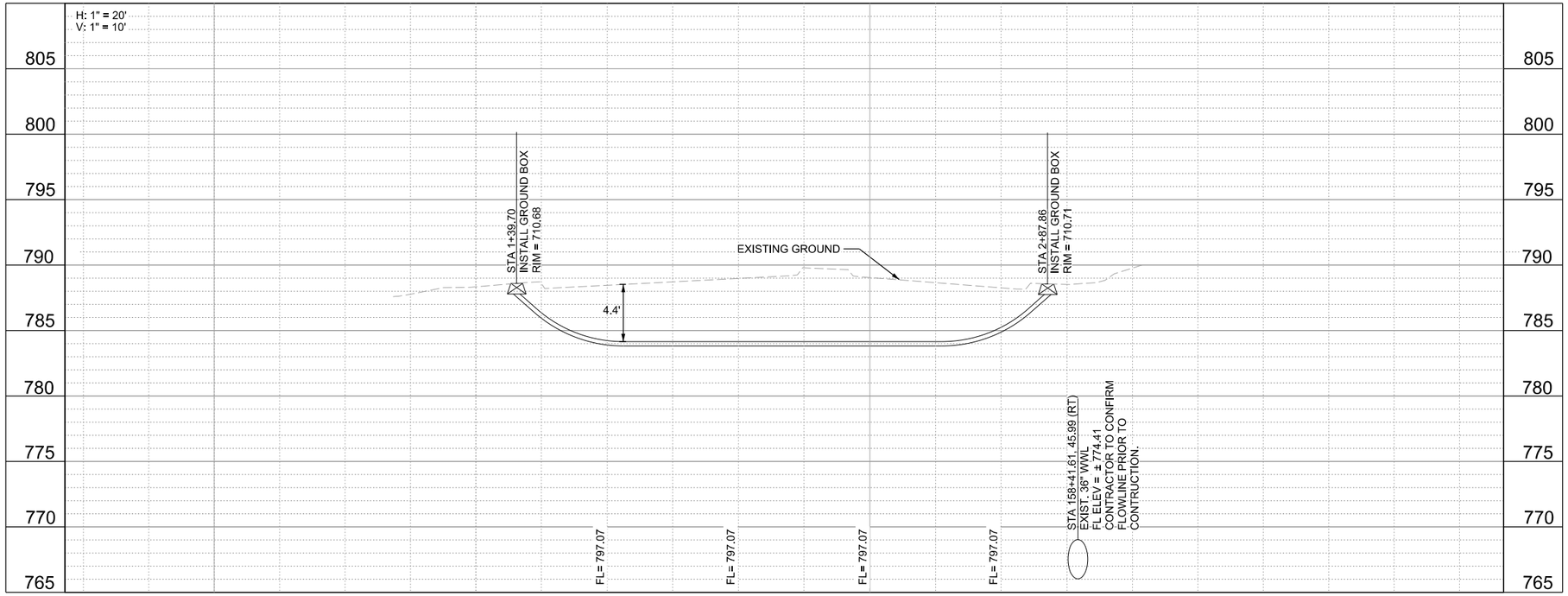

NOTES:

1. CONTRACTOR TO CONFIRM ALL UTILITY CROSSING FLOWLINES PRIOR TO CONTRUCTION.COORDINATE WITH ENGINEER IF FLOWLINES DIFFER FROM ESTIMATED DEPTHS PRIOR TO BORING.

WYOMING SPRINGS
SEGMENT 1
ROUND ROCK, TX

ROUND ROCK TEXAS

halff
13620 BRANTWICK DR
BLDG C, STE 100
AUSTIN, TX 78729
(512) 777-4600
TBPELS FIRM #312

Revision No.	Date	Description

F-312 4/5/23
STATE OF TEXAS
JEFFREY L. NAGY
133255
LICENSED
PROFESSIONAL ENGINEER

100% SUBMITTAL

Project No.:	36179.002
Issued:	
Drawn By:	SG
Checked By:	JN
Scale:	AS NOTED

Sheet Title
DATA CONDUIT
PLAN AND PROFILE
(3 OF 3)

416
Sheet Number

DATA CONDUIT SUMMARY

RUN NO.	SIZE (IN)	PVC SCH 40 LENGTH (FT)	RIGID METAL LENGTH (FT)	BORE (B) TRENCH (T) SURFACE MOUNTED(SM)
D1.1	4	184		B
D1.2	4	58		T
D1.3	4	136		T
D02	4	46		T
D03	4	494		T
D04	4	550		T
D05	4	950		T
D06	4	444		T
D07	4	328		T
D08	4	404		T
D09	4	826		T
D10	4	800		T
D11	4		74	SM
D12	4		1006	SM
D13	4	246		T
D14	4	978		T
D15	4	822		T
D16	4	188		T
D17	4		650	SM
D18	4	256		T
D19	4	115		T
D20	4	265		T
D21	4	196		B
D22	4	85		T
D23	4	190		B
D24	4	100		T
TOTAL		8661	1730	

ELECTRICAL CONDUIT SUMMARY SERVICE A

RUN NO.	SIZE (IN)	CONDUIT TYPE	LENGTH (FT)	#8 XHHW	#8 BARE	ENCASED (E) TRENCH (T) SURFACE MOUNTED (SM)
A01	2	PVC SCH 40	26	2	1	T
A02	2	PVC SCH 40	43	2	1	T
A03	2	PVC SCH 40	66	2	1	T
A04	2	PVC SCH 40	218	2	1	T
A05	2	PVC SCH 40	154	2	1	T
A06	2	PVC SCH 40	77	2	1	T
A07	2	PVC SCH 40	231	2	1	T
A08	2	PVC SCH 40	119	2	1	T
A09	2	PVC SCH 40	130	2	1	T
A10	2	PVC SCH 40	235	2	1	T
A11	2	PVC SCH 40	59	2	1	T
A12	2	PVC SCH 40	164	2	1	T
A13	2	PVC SCH 40	29	2	1	T
A14	2	PVC SCH 40	230	2	1	T
A15	2	PVC SCH 40	90	2	1	T
A16	2	PVC SCH 40	161	2	1	T
A17	2	PVC SCH 40	126	2	1	T
A18	2	PVC SCH 40	125	2	1	T
A19	2	PVC SCH 40	190	2	1	T
A20	2	PVC SCH 40	65	2	1	T
TOTAL			2538	5476	2738	

ELECTRICAL CONDUIT SUMMARY SERVICE B

RUN NO.	SIZE (IN)	CONDUIT TYPE	LENGTH (FT)	#8 XHHW	#8 BARE	ENCASED (E) TRENCH (T) SURFACE MOUNTED (SM)
B01	2	PVC SCH 40	15	2	1	T
B02	2	PVC SCH 40	70	2	1	T
B03	2	PVC SCH 40	66	2	1	T
B04	2	PVC SCH 40	97	2	1	T
B05	2	PVC SCH 40	48	2	1	T
B06	2	PVC SCH 40	148	2	1	E
B07	2	PVC SCH 40	134	2	1	E
B08	2	PVC SCH 40	97	2	1	E
B09	2	PVC SCH 40	95	2	1	E
B10	2	PVC SCH 40	120	2	1	E
B11	2	PVC SCH 40	58	2	1	T
B12	2	PVC SCH 40	224	2	1	T
B13	2	PVC SCH 40	111	2	1	T
B14	2	PVC SCH 40	104	2	1	T
B15	2	PVC SCH 40	213	2	1	T
B16	2	PVC SCH 40	96	2	1	T
B17	2	PVC SCH 40	101	2	1	T
B18	2	PVC SCH 40	185	2	1	T
B19	2	PVC SCH 40	104	2	1	T
B20	2	PVC SCH 40	148	2	1	E
B21	2	PVC SCH 40	149	2	1	E
B22	2	PVC SCH 40	130	2	1	E
B23	2	PVC SCH 40	131	2	1	E
B24	2	PVC SCH 40	132	2	1	E
B25	2	PVC SCH 40	132	2	1	E
B26	2	RIGID METAL	35	2	1	SM
B27	2	RIGID METAL	35	2	1	SM
B28	2	RIGID METAL	29	2	1	SM
B29	2	RIGID METAL	31	2	1	SM
B30	2	RIGID METAL	82	2	1	SM
B31	2	RIGID METAL	81	2	1	SM
B32	2	RIGID METAL	27	2	1	SM
B33	2	RIGID METAL	34	2	1	SM
TOTAL			2908	7184	3592	

ELEC SERVICE NO.	SHEET NO.	ELECTRIC SERVICE DESCRIPTION	MAIN CKT. BKR. POLE/AMP	CIRCUIT NO.	BRANCH CKT. BKR. POLE/AMP	BRANCH CIRCUIT AMPS	KVA LOAD
E1	82	ELEC SERVICE TY D 120/240V 060 (NS) AL (E) PS(U)	2P/50	E1-1	2P/20	8.5	2.0
		REFER TO SERVICE DETAIL		SPARE	1P/20		
				SPARE	1P/20		
E2	82	ELEC SERVICE TY D 120/240V 060 (NS) AL (E) PS(U)	2P/50	E2-2	2P/20	11.19	2.7
		REFER TO SERVICE DETAIL		SPARE	1P/20		
				SPARE	1P/20		

WYOMING SPRINGS
SEGMENT 1
ROUND ROCK, TX

ROUND ROCK TEXAS

halff
13620 BRIARWICK DR
BLDG C, STE 100
AUSTIN, TX 78729
(512) 777-4600
TBPELS FIRM #312

STATE OF TEXAS
PHILLIP ROBERT APPLEBAUM
68404
REGISTERED
PROFESSIONAL
ENGINEER
04/07/2023

The seal appearing on this document was authorized by PHILLIP R. APPLEBAUM, PE# 68404 on 04-07-2023. Alteration of a sealed document without proper notification to the responsible engineer is an offense under the Texas Engineering Practice Act. The record copy of this drawing is on file at the offices of Halff Associates, Texas 79381. TBPELS # FIRM #F-312

100% SUBMITTAL

Project No.:	36179.002
Issued:	04/07/2023
Drawn By:	ARR
Checked By:	PA
Scale:	AS NOTED

Sheet Title
ELECTRICAL SCHEDULES (1 OF 3)

VOLTAGE DROP CALCULATION

RUN NO.	CURRENT THIS RUN	ADDTN'L BRANCH CURRENT IF ANY	DISTANCE TO NEXT RUN	WIRE SIZE A.W.G.	WIRE RESISTANCE (COPPER, LOOP RESISTANCE)	CURRENT RUNNING TOTAL	VOLTAGE DROP	RUNNING TOTAL VOLTAGE DROP	VOLTAGE DROP % AT VOLT. 240
	[AMPS]	[AMPS]	[FEET]	[NO.]	[OHMS/FEET]	[AMPS]	[VOLTS]	[VOLTS]	[PERCENT]
NORTH (A)									
A20	0.78125		65	8	0.001308	0.78125	0.07	0.07	0.03%
A19	0		190	8	0.001308	0.78125	0.19	0.26	0.11%
A18	0.78125		125	8	0.001308	1.5625	0.26	0.52	0.22%
A17	0		126	8	0.001308	1.5625	0.26	0.77	0.32%
A16	0.78125		161	8	0.001308	2.34375	0.49	1.27	0.53%
A15	0		90	8	0.001308	2.34375	0.28	1.54	0.64%
A14	0.78125		230	8	0.001308	3.125	0.94	2.48	1.03%
A13	0.78125		29	8	0.001308	3.90625	0.15	2.63	1.10%
A12	0		164	8	0.001308	3.90625	0.84	3.47	1.45%
A11	0		59	8	0.001308	3.90625	0.30	3.77	1.57%
A10	0.78125		235	8	0.001308	4.6875	1.44	5.21	2.17%
A09	0.78125		130	8	0.001308	5.46875	0.93	6.14	2.56%
A08	0		119	8	0.001308	5.46875	0.85	6.99	2.91%
A07	0.78125		231	8	0.001308	6.25	1.89	8.88	3.70%
A06	0.78125		77	8	0.001308	7.03125	0.71	9.59	4.00%
A05	0		154	8	0.001308	7.03125	1.42	11.01	4.59%
A04	0.78125		218	8	0.001308	7.8125	2.23	13.23	5.51%
A03	0.78125		66	8	0.001308	8.59375	0.74	13.98	5.82%
A02	0		43	8	0.001308	8.59375	0.48	14.46	6.02%
A01	0		26	8	0.001308	**8.59375**	0.29	14.75	**6.15%**

VOLTAGE DROP CALCULATION

RUN NO.	CURRENT THIS RUN	ADDTN'L BRANCH CURRENT IF ANY	DISTANCE TO NEXT RUN	WIRE SIZE A.W.G.	WIRE RESISTANCE (COPPER, LOOP RESISTANCE)	CURRENT RUNNING TOTAL	VOLTAGE DROP	RUNNING TOTAL VOLTAGE DROP	VOLTAGE DROP % AT VOLT. 240
	[AMPS]	[AMPS]	[FEET]	[NO.]	[OHMS/FEET]	[AMPS]	[VOLTS]	[VOLTS]	[PERCENT]
SOUTH (B)									
BRANCH #1									
B32	0.26		27	8	0.001308	0.26	0.01	0.01	0.00%
B30	0		73	8	0.001308	0.26	0.02	0.03	0.01%
B28	0.26		29	8	0.001308	0.52	0.02	0.05	0.02%
B26	0		44	8	0.001308	0.52	0.03	0.08	0.03%
B25	0.390625		132	8	0.001308	0.910625	0.16	0.24	0.10%
B23	0.390625		131	8	0.001308	1.30125	0.22	0.46	0.19%
B20	0.390625		148	8	0.001308	1.691875	0.33	0.79	0.33%
B19	0	1.691875	104	8	0.001308	3.38375	0.46	1.25	0.52%
B18	0.78125		185	8	0.001308	4.165	1.01	2.26	0.94%
B17	0.78125		101	8	0.001308	4.94625	0.65	2.91	1.21%
B16	0		96	8	0.001308	4.94625	0.62	3.53	1.47%
B15	0.78125		213	8	0.001308	5.7275	1.60	5.13	2.14%
B14	0.78125		104	8	0.001308	6.50875	0.89	6.02	2.51%
B13	0		111	8	0.001308	6.50875	0.94	6.96	2.90%
B12	0.78125		224	8	0.001308	7.29	2.14	9.10	3.79%
B11	0.78125		58	8	0.001308	8.07125	0.61	9.71	4.05%
B10	0		120	8	0.001308	8.07125	1.27	10.98	4.57%
B09	0.390625		95	8	0.001308	8.461875	1.05	12.03	5.01%
B07	0.390625		134	8	0.001308	8.8525	1.55	13.58	5.66%
B05	0	0.781	48	8	0.001308	9.63375	0.60	14.19	5.91%
B04	0.78125		97	8	0.001308	10.415	1.32	15.51	6.46%
B02	0	0.781	70	8	0.001308	11.19625	1.03	16.53	6.89%
B01	0		15	8	0.001308	**11.19625**	0.22	16.75	**6.98%**

VOLTAGE DROP CALCULATION

RUN NO.	CURRENT THIS RUN	ADDTN'L BRANCH CURRENT IF ANY	DISTANCE TO NEXT RUN	WIRE SIZE A.W.G.	WIRE RESISTANCE (COPPER, LOOP RESISTANCE)	CURRENT RUNNING TOTAL	VOLTAGE DROP	RUNNING TOTAL VOLTAGE DROP	VOLTAGE DROP % AT VOLT. 240
	[AMPS]	[AMPS]	[FEET]	[NO.]	[OHMS/FEET]	[AMPS]	[VOLTS]	[VOLTS]	[PERCENT]
SOUTH (B)									
BRANCH #2									
B33	0.26		31	8	0.001308	0.26	0.01	0.01	0.00%
B31	0		70	8	0.001308	0.26	0.02	0.03	0.01%
B29	0.26		31	8	0.001308	0.52	0.02	0.06	0.02%
B27	0		46	8	0.001308	0.52	0.03	0.09	0.04%
B24	0.390625		132	8	0.001308	0.910625	0.16	0.24	0.10%
B22	0.390625		130	8	0.001308	1.30125	0.22	0.47	0.19%
B21	0.390625		149	8	0.001308	1.691875	0.33	0.79	0.33%
B19	0	1.691875	104	8	0.001308	3.38375	0.46	1.26	0.52%
B18	0.78125		185	8	0.001308	4.165	1.01	2.26	0.94%
B17	0.78125		101	8	0.001308	4.94625	0.65	2.92	1.22%
B16	0		96	8	0.001308	4.94625	0.62	3.54	1.47%
B15	0.78125		213	8	0.001308	5.7275	1.60	5.13	2.14%
B14	0.78125		104	8	0.001308	6.50875	0.89	6.02	2.51%
B13	0		111	8	0.001308	6.50875	0.94	6.96	2.90%
B12	0.78125		224	8	0.001308	7.29	2.14	9.10	3.79%
B11	0.78125		58	8	0.001308	8.07125	0.61	9.71	4.05%
B10	0		120	8	0.001308	8.07125	1.27	10.98	4.57%
B09	0.390625		95	8	0.001308	8.461875	1.05	12.03	5.01%
B07	0.390625		134	8	0.001308	8.8525	1.55	13.58	5.66%
B05	0	0.781	48	8	0.001308	9.63375	0.60	14.19	5.91%
B04	0.78125		97	8	0.001308	10.415	1.32	15.51	6.46%
B02	0	0.781	70	8	0.001308	11.19625	1.03	16.53	6.89%
B01	0		15	8	0.001308	**11.19625**	0.22	16.75	**6.98%**

VOLTAGE DROP CALCULATION

RUN NO.	CURRENT THIS RUN	ADDTN'L BRANCH CURRENT IF ANY	DISTANCE TO NEXT RUN	WIRE SIZE A.W.G.	WIRE RESISTANCE (COPPER, LOOP RESISTANCE)	CURRENT RUNNING TOTAL	VOLTAGE DROP	RUNNING TOTAL VOLTAGE DROP	VOLTAGE DROP % AT VOLT. 240
	[AMPS]	[AMPS]	[FEET]	[NO.]	[OHMS/FEET]	[AMPS]	[VOLTS]	[VOLTS]	[PERCENT]
SOUTH (B)									
BRANCH #3									
B08	0.390625		134	8	0.001308	**0.390625**	0.07	0.07	**0.03%**
B06	0.390625		48	8	0.001308	0.78125	0.05	0.12	0.05%
B05	0	8.853	48	8	0.001308	9.63375	0.60	0.72	0.30%
B04	0.78125		97	8	0.001308	10.415	1.32	2.04	0.85%
B02	0	0.781	70	8	0.001308	11.19625	1.03	3.07	1.28%
B01	0		15	8	0.001308	**11.19625**	0.22	3.29	**1.37%**

VOLTAGE DROP CALCULATION

RUN NO.	CURRENT THIS RUN	ADDTN'L BRANCH CURRENT IF ANY	DISTANCE TO NEXT RUN	WIRE SIZE A.W.G.	WIRE RESISTANCE (COPPER, LOOP RESISTANCE)	CURRENT RUNNING TOTAL	VOLTAGE DROP	RUNNING TOTAL VOLTAGE DROP	VOLTAGE DROP % AT VOLT. 240
	[AMPS]	[AMPS]	[FEET]	[NO.]	[OHMS/FEET]	[AMPS]	[VOLTS]	[VOLTS]	[PERCENT]
SOUTH (B)									
BRANCH #4									
B03	0.78125		66	8	0.001308	0.78125	0.07	0.07	0.03%
B02	0	10.4155	70	8	0.001308	11.19675	1.03	1.09	0.46%
B01	0		15	8	0.001308	**11.19675**	0.22	1.31	**0.55%**

WYOMING SPRINGS
SEGMENT 1
ROUND ROCK, TX

ROUND ROCK TEXAS

halff
13620 BRIARWICK DR
BLDG C, STE 100
AUSTIN, TX 78729
(512) 777-4600
TBPELS FIRM #312

STATE OF TEXAS
PHILLIP ROBERT APPLEBAUM
68404
REGISTERED PROFESSIONAL ENGINEER
04/07/2023

The seal appearing on this document was authorized by PHILLIP R. APPLEBAUM, PE# 68404 on 04-07-2023. Alteration of a sealed document without proper notification to the responsible engineer is an offense under the Texas Engineering Practice Act. The official copy of this drawing is on file at the Halff Austin office, Austin, Texas 78681. TBPELS FIRM #312

100% SUBMITTAL

Project No.:	36179.002
Issued:	04/07/2023
Drawn By:	ARR
Checked By:	PA
Scale:	AS NOTED

Sheet Title
ELECTRICAL SCHEDULES (2 OF 3)

LIGHTING FIXTURE SCHEDULE

TYPE	MANUFACTURER	MODEL NUMBER	LAMPS	VA	TEMP.	VOLTAGE	DESCRIPTION
A	LUMEC ROADFOCUS LIGHTING	(2) 'RFM-75W-60LED-4K-G2-R3M	LED	150	4000K	UNV	(2) LED, COBRA HEAD LUMINAIRE. TYPE R3M DISTRIBUTION,11,038 LUMENS, UNV VOLTAGE, SILVER METALLIC, PHOTOCELL. PROVIDE MOUNTING HARDWARE ACCESSORIES AS REQUIRED. POLE: ROUND, TAPERED STEEL POLE, PRECAST FOUNDATION. 4' SINGLE ARM MOUNTING.
B	LUMEC ROADFOCUS LIGHTING	'RFM-75W-60LED-4K-G2-R3M	LED	75	4000K	UNV	LED, COBRA HEAD LUMINAIRES. TYPE R2M DISTRIBUTION, 11,038 LUMENS, UNV VOLTAGE, SILVER METALLIC, PHOTOCELL. PROVIDE MOUNTING HARDWARE ACCESSORIES AS REQUIRED. POLE: ROUND, TAPERED STEEL POLE, PRECAST FOUNDATION. 4' SINGLE ARM MOUNTING.
U	LUMEC ROADFOCUS LIGHTING	RFS-091-50W-16LED-4K-G2-R3S-UNV-DMG-APH-FS2-013-ML-PH9-RCD7-SP2-GY3	LED	50	4000K	UNV	LED, COBRA HEAD LUMINAIRES. TYPE R3S DISTRIBUTION,5825LUMENS, UNV VOLTAGE, SILVER METALLIC, PHOTOCELL AND. PROVIDE MOUNTING HARDWARE ACCESSORIES AS REQUIRED IN RID(3)-20, TYPE 2, TXDOT STANDARD

PHOTOMETRIC STATISTICS					
DESCRIPTION	AVG	MAX	MIN	MAX/MI	AVG/MIN
WYOMING SPRINGS	0.9 FC	4.0 FC	0.2 FC	20.0:1	4.5:1
UNDERPASS SUP	4.6 FC	8.9 FC	1.6 FC	5.6:1	2.9:1
WYOMING SPRINGS	2.9 FC	4.1 FC	1.3 FC	3.2:1	2.2:1

SCHEDULE OF ILLUMINATION ROADWAY ASSEMBLIES

(ALL STATION NUMBERS ARE BASELINE)

POLE NO.	TYPE	REFERENCE	POLE HEIGHT (FT)	FOUNDATION TYPE	DRILL SHAFT DIA / DRILL SHAFT LENGH	ARM LENGTH	ASSEMBLY WATTAGE	SOUTHBOUND LUMINAIRE TYPE	NORTHBOUND LUMINAIRE TYPE	SVC CTR
T-1	SA 30 T - 4-4	SHEET 1 OF 6	30	T	30"/ 8'	4'	150	A		E1
T-2	SA 30 T - 4-4	SHEET 1 OF 6	30	T	30"/ 8'	4'	150	A		E1
T-3	SA 30 T - 4-4	SHEET 1 OF 6	30	T	30"/ 8'	4'	150	A		E1
T-4	SA 30 T - 4-4	SHEET 2 OF 6	30	T	30"/ 8'	4'	150	A		E1
T-5	SA 30 T - 4-4	SHEET 2 OF 6	30	T	30"/ 8'	4'	150	A		E1
T-6	SA 30 T - 4-4	SHEET 2 OF 6	30	T	30"/ 8'	4'	150	A		E1
T-7	SA 30 T - 4-4	SHEET 2 OF 6	30	T	30"/ 8'	4'	150	A		E1
T-8	SA 30 T - 4-4	SHEET 3 OF 6	30	T	30"/ 8'	4'	150	A		E1
T-9	SA 30 T - 4-4	SHEET 3 OF 6	30	T	30"/ 8'	4'	150	A		E1
T-10	SA 30 T - 4-4	SHEET 3 OF 6	30	T	30"/ 8'	4'	150	A		E1
T-11	SA 30 T - 4-4	SHEET 4 OF 6	30	T	30"/ 8'	4'	150	A		E1
T-12	SA 30 T - 4-X	SHEET 4 OF 6	30	B	30"/ 8'	4'	75		B	E2
T-13	SA 30 T - 4-X	SHEET 4 OF 6	30	B	30"/ 8'	4'	75		B	E2
T-14	SA 30 T - 4-X	SHEET 4 OF 6	30	B	30"/ 8'	4'	75		B	E2
T-15	SA 30 T - 4-X	SHEET 4 OF 6	30	B	30"/ 8'	4'	75		B	E2
T-16	SA 30 T - 4-X	SHEET 4 OF 6	30	B	30"/ 8'	4'	75		B	E2
T-17	SA 30 T - 4-X	SHEET 4 OF 6	30	B	30"/ 8'	4'	75		B	E2
T-18	SA 30 T - 4-4	SHEET 4 OF 6	30	T	30"/ 8'	4'	150		A	E2
T-19	SA 30 T - 4-4	SHEET 5 OF 6	30	T	30"/ 8'	4'	150		A	E2
T-20	SA 30 T - 4-4	SHEET 5 OF 6	30	T	30"/ 8'	4'	150		A	E2
T-21	SA 30 T - 4-4	SHEET 5 OF 6	30	T	30"/ 8'	4'	150		A	E2
T-22	SA 30 T - 4-4	SHEET 5 OF 6	30	T	30"/ 8'	4'	150		A	E2
T-23	SA 30 T - 4-4	SHEET 6 OF 6	30	T	30"/ 8'	4'	150		A	E2
T-24	SA 30 T - 4-X	SHEET 6 OF 6	30	B	30"/ 8'	4'	75		B	E2
T-25	SA 30 T - 4-X	SHEET 6 OF 6	30	B	30"/ 8'	4'	75		B	E2
T-26	SA 30 T - 4-X	SHEET 6 OF 6	30	B	30"/ 8'	4'	75		B	E2
T-27	SA 30 T - 4-X	SHEET 6 OF 6	30	B	30"/ 8'	4'	75		B	E2
T-28	SA 30 T - 4-4	SHEET 6 OF 6	30	T	30"/ 8'	4'	150		A	E2
T-29	SA 30 T - 4-4	SHEET 6 OF 6	30	T	30"/ 8'	4'	150		A	E2

NOTES:

1. POLE HEIGHT IS BASED ON A 3' LUMINAIRE RISE FROM TOP OF POLE IN ACCORDANCE WITH TxDOT STANDARD RIP(2)-19.
2. FOUNDATION TYPE: TYPE T - TRANSFORMER BASE POLE
   TYPE B – BRIDGE MOUNTED (REFER TO BRIDGE LIGHTING DETAILS, BL STANDARD)"

WYOMING SPRINGS
SEGMENT 1
ROUND ROCK, TX

ROUND ROCK TEXAS

halff
13620 BRIARWICK DR
BLDG C, STE 100
AUSTIN, TX 78729
(512) 777-4600
TBPELS FIRM #312

STATE OF TEXAS
PHILLIP ROBERT APPLEBAUM
68404
REGISTERED
PROFESSIONAL ENGINEER
04/07/2023

The seal appearing on this document was authorized by PHILLIP R. APPLEBAUM, PE# 68404 on 04-07-2023. Alteration of a sealed document without proper notification to the responsible engineer is an offense in accordance with the Texas Engineering Act. The record copy of this drawing is on file at the offices of H&R Associates, Texas 75081. TBPELS FIRM #F-312

100% SUBMITTAL

Project No.:	36179.002
Issued:	04/07/2023
Drawn By:	ARR
Checked By:	PA
Scale:	AS NOTED

Sheet Title
ELECTRICAL SCHEDULES (3 OF 3)

DISCLAIMER:
The use of this standard is governed by the "Texas Engineering Practice Act". No warranty of any kind is made by TxDOT for any purpose whatsoever. TxDOT assumes no responsibility for the conversion of this standard to other formats or for incorrect results or damages resulting from its use.

GENERAL NOTES FOR ALL ELECTRICAL WORK

1. The location of all conduits, junction boxes, ground boxes, and electrical services is diagrammatic and may be shifted to accommodate field conditions.

2. Provide new and unused materials. Ensure that all materials and installations comply with the applicable articles of the National Electrical Code (NEC), TxDOT standards and specifications, National Electrical Manufacturers Association (NEMA), and are listed by Underwriters Laboratories (UL) or a Nationally Recognized Testing Lab (NRTL). NRTLs such as Canadian Standard Association (CSA), Intertek Testing Services NA Inc., or FM Approvals LLC can be considered equivalent to UL. Where reference is made to NEMA listed devices, International Electrotechnical Commission (IEC) listed devices will not be considered an acceptable equal to a NEMA listed device. Acceptable devices may have both a NEMA and IEC listing. Faulty fabrication or poor workmanship in any material, equipment, or installation is justification for rejection. Replace or reinstall rejected material or equipment at no additional cost to the Department.

3. Miscellaneous nuts, bolts and hardware, except for high strength bolts, may be stainless steel when plans specify galvanized, provided the bolt size is ½ in. or less in diameter.

4. Provide the following test equipment as required by the Engineer to confirm compliance with the contract and the NEC: voltmeter, ammeter, megohm meter (1000 volt DC), ground resistance tester, torque wrenches, and torque screwdrivers. Ensure all equipment has been properly calibrated within the last year. Provide calibration certification to the Engineer upon request. Operate test equipment during inspection as requested by the Engineer.

5. Install grounding as shown on the plans and in accordance with the NEC. Ensure all metallic conduits; metal poles; luminaires; and metal enclosures are bonded to the equipment grounding conductor. Provide stranded bare copper or green insulated grounding conductors. Ground rods, connectors, and bonding jumpers are subsidiary to the various bid items.

6. When required by the Engineer, notify the Department in writing of materials from the Material Producers List (MPL) intended for use on each project. Prequalified materials are listed on the MPL on TxDOT's website under "Roadway Illumination and Electrical Supplies." No substitutions will be allowed for materials on this list.

CONDUIT

A. MATERIALS

1. Provide conduit, junction boxes, fittings, and hardware as per TxDOT Departmental Material Specification (DMS) 11030 "Conduit" and Item 618 "Conduit" of TxDOT's "Standard Specifications For Construction And Maintenance Of Highways, Streets, And Bridges," latest edition. Provide conduits listed under Item 618 on the MPL under "Roadway Illumination and Electrical Supplies." Provide conduit types according to the descriptive code or as shown on the plans. Do not substitute other types of conduits for those shown. Provide liquidtight flexible metal conduit (LFMC) when flexible conduit is called for on galvanized steel rigid metallic conduit (RMC) systems. Provide liquidtight flexible nonmetallic conduit (LFNC) when flexible conduit is called for on polyvinyl chloride (PVC) systems.

2. Provide galvanized steel RMC for all exposed conduits, unless otherwise shown on the plans. Properly bond all metal conduits.

3. Unless otherwise shown on the plans, provide junction boxes with a minimum size as shown in the following table, which applies to the greatest number of conductors entering the box through one conduit with no more than four conduits per box. When a mixture of conductor sizes is present, count the conductors as if all are of the larger size. For situations not applicable to the table, size junction boxes in accordance with NEC.

AWG	3 CONDUCTORS	5 CONDUCTORS	7 CONDUCTORS
#1	10" x 10" x 4"	12" x 12" x 4"	16" x 16" x 4"
#2	8" x 8" x 4"	10" x 10" x 4"	12" x 12" x 4"
#4	8" x 8" x 4"	10" x 10" x 4"	10" x 10" x 4"
#6	8" x 8" x 4"	8" x 8" x 4"	10" x 10" x 4"
#8	8" x 8" x 4"	8" x 8" x 4"	8" x 8" x 4"

4. Junction boxes with an internal volume of less than 100 cu. in. and supported by entering raceways must have threaded entries or hubs identified for the intended purpose and supported by connection of two or more rigid metal conduits. Secure conduit within 3 ft. of the enclosure or within 18 in. of the enclosure if all conduit entries are on the same side. Mechanically secure all junction boxes with an internal volume greater than 100 cu. inches.

5. Provide hot dipped galvanized cast iron or sand cast aluminum outlet boxes for junction boxes containing only 10 AWG or 12 AWG conductors. Do not use die cast aluminum boxes. Size outlet boxes according to the NEC.

6. Do not use intermediate metal conduit (IMC) or electrical metallic tubing (EMT) unless specifically required by the plan sheets. When EMT is called for, provide junction boxes made from galvanized steel sheeting, listed and approved for outdoor use, unless otherwise noted on the plans. Size all galvanized steel junction boxes in accordance with the NEC. Provide junction boxes for IMC conduit systems that meet the same requirements for junction boxes used with RMC systems.

7. Provide PVC junction boxes intended for outdoor use on PVC conduit systems, unless otherwise noted on the plans.

8. Provide PVC elbows in PVC conduit systems, unless otherwise shown on the plans. Use only a flat, high tensile strength polyester fiber pull tape for pulling conductors through the PVC conduit system. When galvanized steel RMC elbows are specifically called for in the plans and any portion of the RMC elbow is buried less than 18 in., ground the RMC elbow by means of a grounding bushing on a rigid metal extension. Grounding of the rigid metal elbow is not required if the entire RMC elbow is encased in a minimum of 2 in. of concrete. PVC extensions are allowed on these concrete encased rigid metal elbows. RMC or PVC elbows are subsidiary to various bid items.

9. When required, provide High-Density Polyethylene (HDPE) conduit with factory installed internal conductors according to Item 622 "Duct Cable." At the Contractor's request and with approval by the Engineer, substitute HDPE conduit with no conductors for bored schedule 40 or schedule 80 PVC conduit bid under Item 618. Ensure bored HDPE substituted for PVC is schedule 40 and of the same size PVC called for in the plans. Ensure the substituted HDPE meets the requirements of Item 622, except that the conduit is supplied without factory-installed conductors. Make the transition of the HDPE conduit to PVC (or RMC elbow when required) at the bore pit. Provide conduit of the size and schedule as shown on the plans. Do not extend substituted conduit into ground boxes or foundations. Provide PVC or galvanized steel RMC elbows as called for at all ground boxes and foundations.

10. Use two-hole straps when supporting 2 in. and larger conduits. On electrical service poles, properly sized stainless steel or hot dipped galvanized one-hole standoff straps are allowed on the service riser conduit.

B. CONSTRUCTION METHODS

1. Provide and install expansion joint conduit fittings on all structure-mounted conduits at the structure's expansion joints to allow for movement of the conduit. In addition, provide and install expansion joint fittings on all continuous runs of galvanized steel RMC conduit externally exposed on structures such as bridges at maximum intervals of 150 ft. When requested by the project Engineer, supply manufacturer's specification sheet for expansion joint conduit fittings. Repair or replace expansion joint fittings that do not allow for movement at no additional cost to the Department. Provide the method of determining the amount of expansion to the Engineer upon request. Do not use LFMC or LFNC as a substitute for the required expansion conduit fittings.

2. Space all conduit supports at maximum intervals of 5 ft. Install conduit spacers when attaching metal conduit to surface of concrete structures. See "Conduit Mounting Options" on ED(2). Install conduit support within 3 ft. of all enclosures and conduit terminations.

3. Do not attach conduit supports directly to pre-stressed concrete beams except as shown specifically in the plans or as approved by the Engineer.

4. Unless otherwise shown on the plans, jack or bore conduit placed beneath existing roadways, driveways, sidewalks, or after the base or surfacing operation has begun. Backfill and compact the bore pits below the conduit per Item 476 "Jacking, Boring, or Tunneling Pipe or Box" prior to installing conduit or duct cable to prevent bending of the connections.

5. When placing conduit in the sub-grade of new roadways, backfill all trenches with excavated material unless otherwise noted on the plans. When placing conduit in the sub-base of new roadways, backfill all trenches with cement-stabilized base as per requirements of Items 110 "Excavation", 400 "Excavation and Backfill for Structures", 401 "Flowable Backfill", 402 "Trench Excavation Protection", and 403 "Temporary Special Shoring."

6. Provide and place warning tape approximately 10 in. above all trenched conduit as per Item 618.

7. During construction, temporarily cap or plug open ends of all conduit and raceways immediately after installation to prevent entry of dirt, debris and animals. Temporary caps constructed of durable duct tape are allowed. Tightly fix the tape to the conduit opening. Clean out the conduit and prove it clear in accordance with Item 618 prior to installing any conductors.

8. Ensure conduit entry into the top of any enclosure is waterproof by installing conduit sealing hubs or using boxes with threaded bosses. This includes surface mounted safety switches, meter cans, service enclosures, auxiliary enclosures and junction boxes. Grounding bushings on water tight sealing hubs are not required.

9. Fit the ends of all PVC conduit terminations with bushings or bell end fittings. Provide and install a grounding type bushing on all metal conduit terminations.

10. Install a bonding jumper from each grounding bushing to the nearest ground rod, grounding lug, or equipment grounding conductor. Ensure all bonding jumpers are the same size as the equipment grounding conductor. Bonding of conduit used as a casing under roadways for duct cable is not required, if the duct extends the full length through the casing.

11. At all electrical services, install a 6 AWG solid copper grounding electrode conductor.

12. Place conduits entering ground boxes so that the conduit openings are between 3 in. and 6 in. from the bottom of the box. See the ground box detail on sheet ED(4).

13. Seal ends of all conduits with duct seal, expandable foam, or by other methods approved by the Engineer. Seal conduit immediately after completion of conductor installation and pull tests. Do not use duct tape as a permanent conduit sealant. Do not use silicone caulk as a conduit sealant.

14. File smooth the cut ends of all mounting strut and conduit. Before installing, paint the field cut ends of all mounting strut and RMC (threaded or non-threaded) with zinc rich paint (94% or more zinc content) to alleviate overspray. Use zinc rich paint to touch up galvanized material as allowed under Item 445 "Galvanizing." Do not paint non-galvanized material with a zinc rich paint as an alternative for materials required to be galvanized.

Texas Department of Transportation

Traffic Operations Division Standard

ELECTRICAL DETAILS CONDUITS & NOTES

ED(1)-14

FILE:	ed1-14.dgn	DN:	CK:	DW:	CK:
© TxDOT	October 2014	CONT	SECT	JOB	HIGHWAY
REVISIONS					
		DIST	COUNTY		SHEET NO.

DATE:
FILE:

DISCLAIMER:
The use of this standard is governed by the "Texas Engineering Practice Act". No warranty of any kind is made by TxDOT for any purpose whatsoever. TxDOT assumes no responsibility for the conversion of this standard to other formats or for incorrect results or damages resulting from its use.

DATE:
FILE:

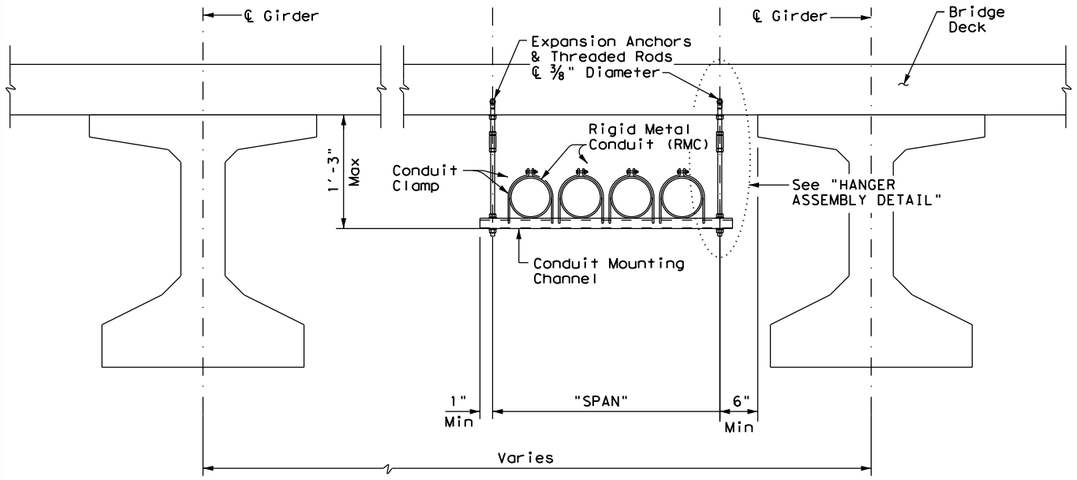

CONDUIT HANGING DETAIL

CONDUIT MOUNTING CHANNEL		
"SPAN"	"W" x "H"	"T"
less than 2'	1 5/8" x 1 3/8"	12 Ga.
2'-0" to 2'-6"	1 5/8" x 1 5/8"	12 Ga.
>2'-6" to 3'-0"	1 5/8" x 2 7/16"	12 Ga.

Channels with round or short slotted hole patterns are allowed, if the load carrying capacity is not reduced by more than 15%.

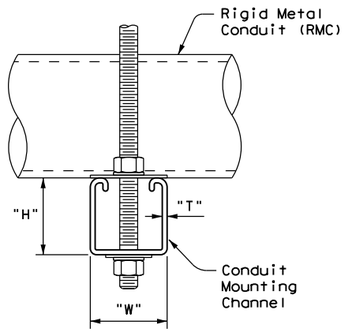

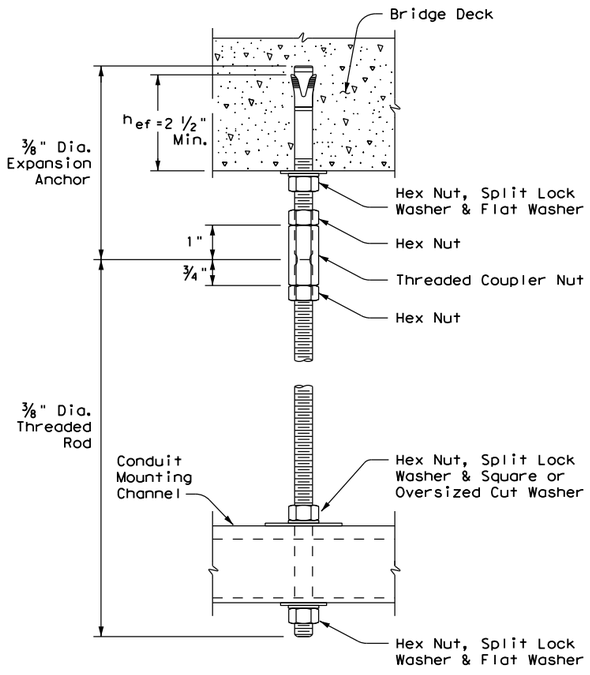

HANGER ASSEMBLY DETAIL

ELECTRIC CONDUIT TO BRIDGE DECK ATTACHMENT

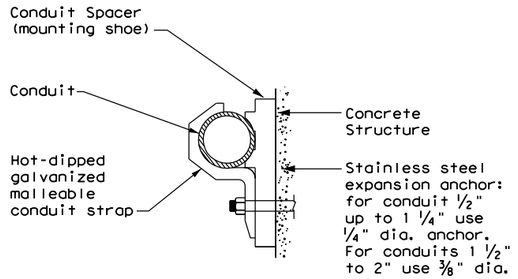

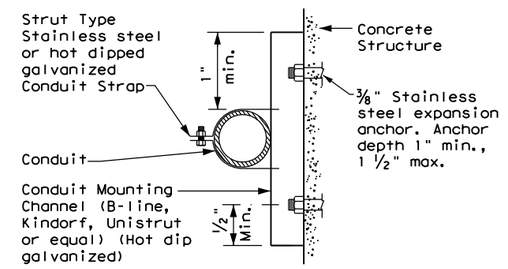

CONDUIT MOUNTING OPTIONS

Attachment to concrete surfaces
See ED(1)B.2

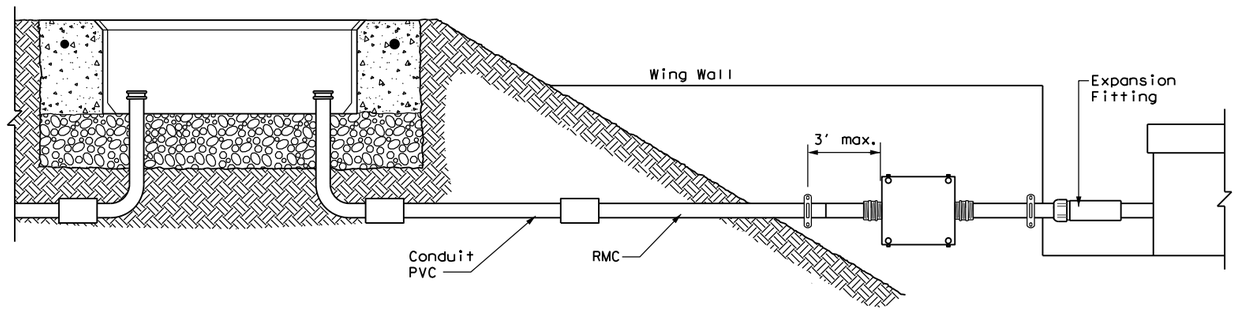

TYPICAL CONDUIT ENTRY TO BRIDGE STRUCTURE DETAIL

EXPANSION ANCHOR NOTES FOR BRIDGE DECK ATTACHMENT

1. Use torque controlled mechanical expansion anchors that are approved for use in cracked concrete by the International Code Council, Evaluation Service (ICC-ES). The chosen anchor product shall have a designated ICC-ES Evaluation Report number, and its approval status shall be maintained on the ICC-ES website under Division 031600 for Concrete Anchors.

2. Unless otherwise approved by the Engineer: do not use adhesive anchors; do not use expansion anchors that are not included in the ICC-ES approval list; and do not use expansion anchors that are only approved for use in uncracked concrete.

3. Use anchors manufactured with stainless steel expansion wedges. Anchors manufactured with carbon steel expansion wedges are not allowed. Anchor bodies can be either zinc-plated carbon steel or stainless steel. For application in marine environment, both the anchor body and expansion wedge shall be stainless steel.

4. Install anchors as shown on the plans and in accordance with the anchor manufacturer's published installation instructions. Arrange a field demonstration test to evaluate the procedures and tools. The test shall be witnessed and approved by the Engineer prior to furnishing anchors on the structure.

5. Prior to hole drilling, use rebar locator to ensure clearing of existing deck strands or reinforcement. Install anchors to ensure a minimum effective embedment depth, (h_{ef}), as shown. Increase (h_{ef})as needed to ensure sufficient thread length for proper torqueing and tightening of anchors.

6. Use anchors of minimum 1600 Lbs tensile capacity (minimum of steel, concrete breakout, and concrete pullout strengths as determined by ACI 318 Appendix D) at the required minimum embedment depth (h_{ef}). No lateral loads shall be introduced after conduit installation.

Texas Department of Transportation

Traffic Operations Division Standard

ELECTRICAL DETAILS
CONDUIT SUPPORTS

ED(2)-14

FILE: ed2-14.dgn	DN: TxDOT	CK: TxDOT	DW: TxDOT	CK: TxDOT
©TxDOT October 2014	CONT	SECT	JOB	HIGHWAY
REVISIONS				
	DIST	COUNTY		SHEET NO.

71B

DISCLAIMER:
The use of this standard is governed by the "Texas Engineering Practice Act". No warranty of any kind is made by TxDOT for any purpose whatsoever. TxDOT assumes no responsibility for the conversion of this standard to other formats or for incorrect results or damages resulting from its use.

ELECTRICAL CONDUCTORS

A. MATERIAL INFORMATION

1. Provide Type XHHW insulated conductors in accordance with Departmental Material Specification (DMS)11040 "Conductors" and Item 620 "Electrical Conductors." Provide conductors as listed on the Material Producers List (MPL) on the Department web site under "Roadway Illumination and Electrical Supplies" Item 620. Color code insulated conductors in conformance with the NEC. Identify grounded (neutral) conductors with white insulation. Identify grounding conductors (ground wires) with green insulation or bare conductors. Identify ungrounded (hot) conductors with any color insulation except green, white, or gray. Keep color scheme consistent throughout the wiring system. Identify conductors 6 American Wire Gauge (AWG) and smaller by continuous color jacket. Identify electrical conductors 4 AWG and larger by continuous color jacket or by colored tape. When identifying conductors with colored tape, mark at least 6 in. of the conductor's insulation with half laps of tape.
2. Provide a solid copper 6 AWG grounding electrode conductor to bond the electrical service equipment to the concrete encased grounding electrode or the ground rod at the service location. Connect the grounding electrode conductor to the ground rod with a UL listed connector in accordance with DMS 11040. Connect the grounding electrode conductor to the concrete encased grounding electrode as shown in the plans.
3. Where two or more circuits are present in one conduit or enclosure, permanently identify the conductors of each branch circuit by attaching a non-metallic tag around both circuit conductors at each accessible location. Provide tags with two straps, large enough to indicate circuit number, letter, or other identification as shown in the plans. Print circuit identification on the tag with a permanent marker.
4. Use listed compression or screw type pressure connectors, terminal blocks, or split bolt connectors for splicing as specified in DMS 11040. Use hot melt adhesive tape to fill the gap and seal the ends of heat shrink tubing. Provide UL listed gel-filled insulating splice covers. Splicing materials, insulating materials, breakaway disconnects, splice covers, and fuse holders are subsidiary to various bid items.

B. CONSTRUCTION METHODS

1. Use only a flat, high tensile strength polyester fiber pull tape for pulling conductors through the conduit system. After installing conductors in conduit, perform conductor pull test. If a conductor cannot be freely pulled, make any needed alterations or repairs at no additional cost to the department. Perform insulation resistance tests in accordance with Item 620. Coordinate with the Engineer to witness the tests.
2. Leave 2 ft. minimum, 3 ft. maximum length for each conductor up to the splice in ground boxes. Leave 3 ft. minimum, 4 ft. maximum length of conductor in ground boxes when pulled through with no splice. Leave 1 ft. minimum, 1.5 ft. maximum length of conductor at enclosures, weatherheads and pole bases.
3. Make splices only in junction boxes, ground boxes, pole bases, or electrical enclosures and use only listed compression or screw type pressure connectors, terminal blocks, or split bolt connectors. Insulate splices with heavy wall heat shrink tubing or gel-filled insulating splice covers to provide a watertight splice. Overlap conductor insulation with heat shrink tubing a minimum of 2 in. past both sides of the splice. Where heat shrink tubing may not shrink sufficiently to provide a watertight seal around the individual conductors, prior to heating the tubing, increase the diameter of the conductor insulation using hot melt adhesive tape to provide a watertight seal between the individual conductors and the heat shrink tubing. Ensure the tape extends past the heat shrink tubing. Use hot melt adhesive tape to fill the gap and seal the ends of heat shrink tubing. Heat shrink tubing that appears to have been burned, or overheated, is considered defective and must be replaced.
4. Size and install gel-filled insulating splice covers according to manufacturer's specifications when used in place of heat shrink tubing.
5. Wire nuts with factory applied waterproof sealant may be used for 8 AWG or smaller conductors in above ground junction boxes, but not in pole bases or ground boxes. Install wire nuts in an upright position to prevent the accumulation of water.
6. Support conductors in illumination poles with a J-hook at the top of the pole.
7. When terminating conductors, remove the insulation and jacketing material without nicking the individual strands of the conductor. Conductors with nicked individual conductor strands or removed strands will be considered damaged.
8. Replace conductors and cables that are damaged beyond repair or that fail an insulation resistance test at no additional cost to the department.
9. Do not repair damaged conductors with duct tape, electrical tape, or wire nuts. Use only approved splicing methods.
10. Do not terminate more than one conductor under a single connector, unless the connector is rated for multiple conductors. Do not exceed the pressure connector's listing for maximum number and size of conductors allowed.
11. Install breakaway connectors on conductors bid under Item 620 whenever those conductors pass through a breakaway support device. Follow manufacturer's instructions when terminating conductors to breakaway connectors. Properly torque threaded connections. Proper terminations are critical to the safe operation of breakaway devices. Trim waterproofing boots on breakaway connectors to fit snugly around the conductor to ensure waterproof connection. Only one conductor may enter a single opening in a boot. Provide waterproof boots with the correct number of openings. Leave unused openings factory sealed. Use prequalified breakaway connectors as shown on the MPL.
12. Provide and install a separate stranded equipment grounding conductor (EGC) in all conduits that contain circuit wiring of 50 volts or more. Unless shown elsewhere, size the EGC to be the same size as the largest current carrying conductor contained in the conduit. Ensure all EGCs are bonded together at every accessible location. For traffic signal installations, provide a minimum size 8 AWG EGC. The EGC is paid for under Item 620.

C. TEMPORARY WIRING

1. Install temporary conductors and electrical equipment in accordance with the NEC article "Temporary Installations" and Department standard sheets.
2. Provide a ground fault circuit interrupter (GFCI) for power outlets for portable electrical equipment, power tools, ice machines, ice storage bins and refrigerators located outdoors at grade. GFCI may be any one of the following: molded cord and plug set, receptacle, or circuit breaker type.
3. Use listed wire nuts with factory applied sealant for temporary wiring where approved.
4. Enclose conductor splices within a listed enclosure or ground box, or ensure the splices are more than 10 ft. above grade vertically and more than 5 ft. horizontally from any metal structure. Where installing temporary conductors in areas subject to vehicle traffic or mobile construction equipment, ensure the vertical clearance to ground is at least 18 ft. when measured at the lowest point. Ground messenger wires that support power conductors in conformance with the NEC.
5. Protect and when necessary repair any existing electrical conduits uncovered during the construction process in a timely manner and in conformance with the NEC.

GROUND RODS & GROUNDING ELECTRODES

A. MATERIAL INFORMATION

1. Provide and install a grounding electrode at electrical services. Provide ground rods according to DMS 11040 and the plans. Larger diameter or longer length rods may be called for in some specific locations, see the individual plans sheets. Concrete encased grounding electrodes may be called for in specific locations including electrical service, see individual plan sheets.

B. CONSTRUCTION METHODS

1. Furnish auxiliary ground rods for lightning protection and install in soil, concrete, or both, as called for in the plans. For ground rods installed in concrete, ensure the connection of the conductor to the ground rod is readily accessible for inspection or repairs. For ground rods installed in soil, ensure that the upper end is between 2 to 4 in. below finished grade.
2. Do not place ground rods in the same drilled hole as a timber pole.
3. Install ground rods so the imprinted part number is at the upper end of the rod.
4. Remove all non-conductive coatings such as concrete splatter from the rod at the clamp location.
5. Route all conductors as short and straight as possible for connection to lightning protection ground rods. When a bend is required, ensure a minimum radius bend of four inches for these conductors.
6. Unless otherwise called for in the plans, protect grounding electrode conductors with non-metallic conduit. When protecting grounding electrode conductors with metal conduit, provide and install a grounding type bushing and properly sized bonding jumper on each end of the metal conduit.
7. Written authorization is required before installing a ground rod in a horizontal trench for rocky soil or a solid rock bottom.

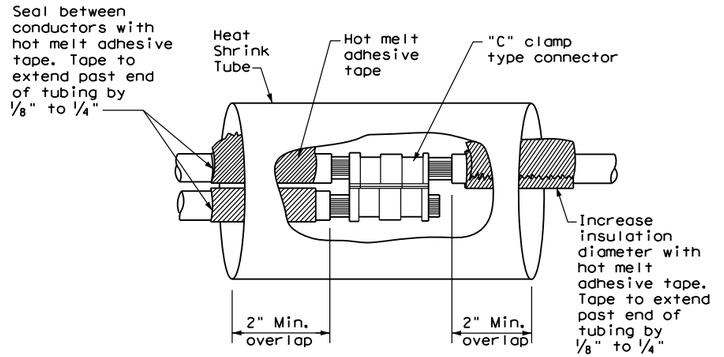

SPLICE OPTION 1
Compression Type

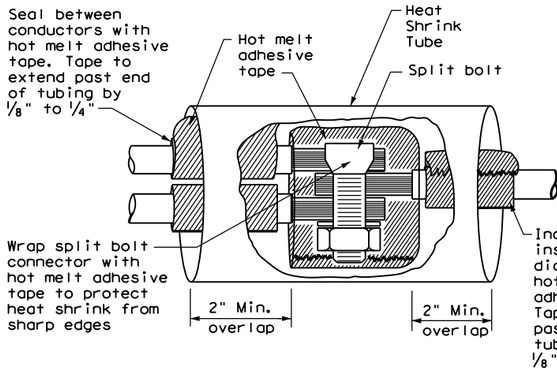

SPLICE OPTION 2
Split Bolt Type

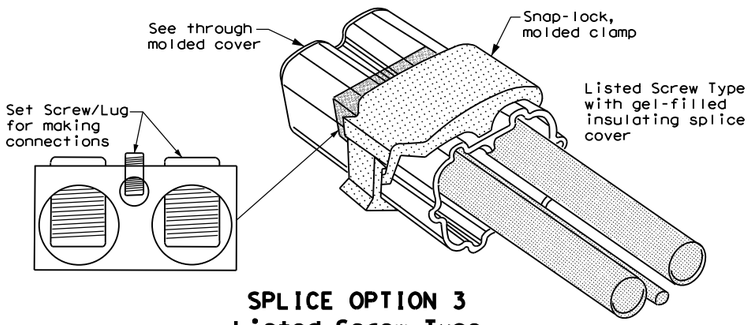

SPLICE OPTION 3
Listed Screw Type

Texas Department of Transportation

Traffic Operations Division Standard

ELECTRICAL DETAILS CONDUCTORS

ED(3)-14

FILE: ed3-14.dgn	DN: TxDOT	CK: TxDOT	DW: TxDOT	CK: TxDOT
©TxDOT October 2014	CONT	SECT	JOB	HIGHWAY
REVISIONS	DIST	COUNTY		SHEET NO.

71C

DATE:
FILE:

DISCLAIMER:
The use of this standard is governed by the "Texas Engineering Practice Act". No warranty of any kind is made by TxDOT for any purpose whatsoever. TxDOT assumes no responsibility for the conversion of this standard to other formats or for incorrect results or damages resulting from its use.

DATE:
FILE:

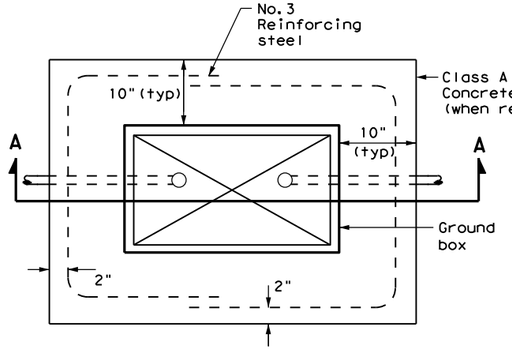

PLAN VIEW

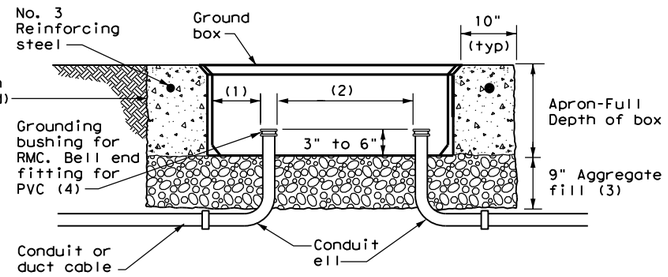

SECTION A - A

APRON FOR GROUND BOX

(1) Uniformly space ends of conduits within the ground box. Position ends of conduits so that ground box walls do not interfere with the installation of grounding bushings or bell end fittings.

(2) Maintain sufficient space between conduits to allow for proper installation of bushing.

(3) Place aggregate under the box, not in the box. Aggregate should not encroach on the interior volume of the box.

(4) Install a grounding bushing on the upper end of all RMC terminating in a ground box. Ground RMC elbows when any part of the elbow is less than 18 in. below the bottom of the ground box. Install a PVC bushing or bell end fitting on the upper end of all PVC conduits terminating in a ground box.

GROUND BOX DIMENSIONS	
TYPE	OUTSIDE DIMENSIONS (INCHES) (Width x Length X Depth)
A	12 X 23 X 11
B	12 X 23 X 22
C	16 X 29 X 11
D	16 X 29 X 22
E	12 X 23 X 17

GROUND BOX COVER DIMENSIONS								
TYPE	DIMENSIONS (INCHES)							
	H	I	J	K	L	M	N	P
A, B & E	23 1/4	23	13 3/4	13 1/2	9 7/8	5 1/8	1 3/8	2
C & D	30 1/2	30 1/4	17 1/2	17 1/4	13 1/4	6 3/4	1 3/8	2

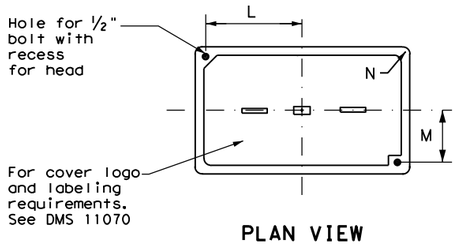

PLAN VIEW

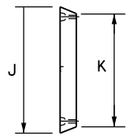

END

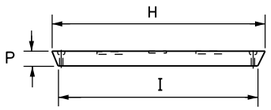

SIDE

GROUND BOX COVER

GROUND BOXES

A. MATERIALS

1. Provide polymer concrete ground boxes measuring 16x30x24 in. (WxLxD) or smaller in accordance with Departmental Material Specification (DMS) 11070 "Ground Boxes" and Item 624 "Ground Boxes."

2. Provide Type A, B, C, D, and E ground boxes as shown in the plans, and as listed on the Material Producers List (MPL) on the Department web site under "Roadway Illumination and Electrical Supplies," Item 624.

3. Ensure ground box cover is correctly labeled in accordance with DMS 11070.

4. Provide larger ground boxes in accordance with Item 624 and as shown in the plans.

B. CONSTRUCTION METHODS

1. Remove all gravel and dirt from conduit. Cap all conduits prior to placing aggregate and setting ground box. Provide Grade 3 or 4 coarse aggregate as shown on Table 2 of Item 302 "Aggregates for Surface Treatments." Ensure aggregate bed is in place and at least 9 inches deep, prior to setting the ground box. Install ground box on top of aggregate.

2. Cast ground box aprons in place. Reinforcing steel may be field bent. Ensure the depth of concrete for the apron extends from finished grade to the top of the aggregate bed under the box. Ground box aprons, including concrete and reinforcing steel, are subsidiary to ground boxes when called for by descriptive code.

3. Keep bolt holes in the box clear of dirt. Bolt covers down when not working in ground boxes.

4. Install all conduits and ells in a neat and workmanlike manner. Uniformly space conduits so grounding bushings and bell end fittings can easily be installed.

5. Temporarily seal all conduits in the ground box until conductors are installed.

6. Permanently seal conduits immediately after the completion of conductor installation and pull tests. Permanently seal the ends of all conduits with duct seal, expandable foam, or other method as approved. Do not use duct tape as a permanent conduit sealant. Do not use silicone caulk as a sealant.

7. When a ground rod is present in a ground box, bond all equipment grounding conductors together and to the ground rod with listed connectors.

8. When a type B or D ground box is stacked to meet volume requirements, it is allowable to cut an appropriately sized hole for conduit entry in the side wall at least 18 inches below grade.

9. If an existing ground box in the contract has a metal cover, bond the cover to the equipment grounding conductor with a 3 ft. long stranded bonding jumper the same size as the grounding conductor. The bonding jumper is subsidiary to various bid items. Verify existing ground boxes with metal covers are shown on the plans, with notes fully describing the work required.

10. If other ground boxes with metal covers are within the project limits but are not part of the contract, the Engineer may direct the Contractor to bond the metal covers, identifying the specific boxes in writing. This work will be paid for separately.

11. Bond metal ground box covers to the grounding conductor with a tank ground type lug.

Texas Department of Transportation

Traffic Operations Division Standard

ELECTRICAL DETAILS
GROUND BOXES

ED(4)-14

FILE: ed4-14.dgn	DN: TxDOT	CK: TxDOT	DW: TxDOT	CK: TxDOT
©TxDOT October 2014	CONT	SECT	JOB	HIGHWAY
REVISIONS				
	DIST	COUNTY		SHEET NO.

DISCLAIMER:
The use of this standard is governed by the "Texas Engineering Practice Act". No warranty of any kind is made by TxDOT for any purpose whatsoever. TxDOT assumes no responsibility for the conversion of this standard to other formats or for incorrect results or damages resulting from its use.

DATE:
FILE:

ELECTRICAL SERVICES NOTES

1. Provide new materials. Ensure installation and materials comply with the applicable provisions of the National Electrical Code (NEC) and National Electrical Manufacturers Association (NEMA) standards. Ensure material is Underwriters Laboratories (UL) listed. Provide and install electrical service conduits, conductors, disconnects, contactors, circuit breaker panels, and branch circuit breakers as shown on the Electrical Service Data chart in the plans. Faulty fabrication or poor workmanship in material, equipment, or installation is justification for rejection. Where manufacturers provide warranties and guarantees as a customary trade practice, furnish these to the State.

2. Provide electrical services in accordance with Electrical Details standard sheets, Departmental Material Specification (DMS) 11080 "Electrical Services,"DMS 11081 "Electrical Services-Type A," DMS 11082 "Electrical Services-Type C," DMS 11083 "Electrical Services-Type D," DMS 11084 "Electrical Services-Type T," DMS 11085 "Electrical Services-Pedestal (PS)", and Item 628 "Electrical Services" of the Standard Specifications. Provide electrical service types A, C, and D, as listed on the Material Producers List (MPL) on the Department web site under "Roadway Illumination and Electrical Supplies," Item 628. Provide other service types as detailed on the plans.

3. Provide all work, materials, services, and any incidentals needed to install a complete electrical service as specified in the plans.

4. Coordinate with the Engineer and the utility provider for metering and compliance with utility requirements. Primary line extensions, connection charges, meter charges, and other charges by the utility company to provide power to the location are paid for in accordance with Item 628. Get approval for the costs associated with these charges prior to engaging the utility company to do the work. Consult with the utility provider to determine costs and requirements, and coordinate the work as approved.

5. The enclosure manufacturer will provide Master Lock Type 2 with brass tumblers keyed #2195 for all custom electrical enclosures. Installing Contractor is to provide Master Lock #2195 Type 2 with brass tumblers for "off the shelf" enclosures. Master Lock #2195 keys and locks become property of the State. Unless otherwise approved, do not energize electrical service equipment until locks are installed.

6. Enclosures with external disconnects that de-energize all equipment inside the enclosure do not need a dead front trim. Protect incoming line terminations from incidental contact as required by the NEC.

7. When galvanized is specified for nuts, screws, bolts or miscellaneous hardware, stainless steel may be used.

8. Provide wiring and electrical components rated for 75°C. Provide red, black, and white colored XHHW service entrance conductors of minimum size 6 American Wire Gauge (AWG). Identify size 6 AWG conductors by continuous color jacket. Identify electrical conductors sized 4 AWG and larger by continuous color jacket or by colored tape. Mark at least 6 inches of the conductor's insulation with half laps of colored tape, when identifying conductors. Ensure each service entrance conductor exits through a separately bushed non-metallic opening in the weatherhead. The lengths of the conductors outside the weatherhead are to be 12 inches minimum, 18 inches maximum, or as required by utility.

9. All electrical service conduit and conductors attached to the electrical service including the riser or the elbow below ground are subsidiary to the electrical service. For an underground utility feed, all service conduit and conductors after the elbow, including service conduit and conductors for the utility pole riser when furnished by the Contractor, will be paid for separately.

10. Provide rigid metal conduit (RMC) for all conduits on service, except for the ½ in. PVC conduit containing the electrical service grounding electrode conductor. Size the service entrance conduit as shown in the plans. Ensure conduit for branch circuit entry to enclosure is the same size as that shown on the layout sheets for branch circuit conduit. Extend all rigid metal conduits a minimum of 6 inches underground and then couple to the type and schedule of the conduit shown on the layout for that particular branch circuit. Install a grounding bushing on the RMC where it terminates in the service enclosure.

11. Use of liquidtight flexible metal conduit (LFMC) is allowed between the meter and service enclosure when they are mounted 90 to 180 degrees to each other. Size the LFMC the same size as service entrance conduit. LFMC must not exceed 3 feet in length. Strap LFMC within 1 foot of each end. LFMC less than 12 inches in length need not be strapped. Each end of LFMC must have a grounding bushing or be terminated with a grounding fitting. The LFMC must contain a grounded (neutral) conductor. Ensure any bend in LFMC never exceeds 180 degrees. A pull test is required on all installed conductors, with at least six inches of free conductor movement demonstrated to the satisfaction of the Engineer.

12. Ensure all mounting hardware and installation details of services conform to utility company specifications.

13. For all electrical service enclosures listed under Item 628 on the MPL, the UL 508 enclosure manufacturers will prepare and submit a schematic drawing unique to each service. Before shipment to the job site, place the applicable laminated schematic drawings and the laminated plan sheet showing the electrical service data chart used to build the enclosure in the enclosure's data pocket. The installing contractor will copy and laminate the actual project plan sheets detailing all equipment and branch circuits supplied by that service. The laminated plan sheets are to be placed in the service enclosure's document pocket. Reduce 11 in. x 17 in. plan sheets to 8 ½ in. x 11 in. before laminating. If the installation differs from the plan sheets, the installing contractor is to redline plan sheets before laminating.

14. When providing an "Off The Shelf" Type D or Type T service, provide laminated plan sheets detailing equipment and branch circuits supplied by that service. Reduce 11 in. x 17 in. plan sheets to 8 ½ in. x 11 in before laminating. Deliver these drawings before completion of the work to the Engineer, instead of placing in enclosure that has no door pocket.

15. Do not install conduit in the back wall of a service enclosure where it would penetrate the equipment mounting panel inside the enclosure. Provide grounding bushings on all metal conduits, and terminate bonding jumpers to grounding bus. Grounding bushings are not required when the end of the metal conduit is fitted with a conduit sealing hub or threaded boss, such as a meter base hub.

SERVICE ASSEMBLY ENCLOSURE

1. Provide threaded hub for all conduit entries into the top of enclosure.

2. Type galvanized steel (GS) enclosures may be used for Type C panelboards and for Type D and T services that do not use an enclosure mounted photocell or lighting contactor. Provide GS enclosures in accordance with DMS 11080, 11082, 11083, and 11084.

3. Provide aluminum (AL) and stainless steel (SS) enclosures for Types A, C, and D in accordance with DMS 11080, 11081, 11082, 11083, and 11084. Do not paint stainless steel.

4. Provide pedestal service (PS) enclosures in accordance with ED(9) and DMS 11080 and 11085. Do not provide GS pedestal services. If GS is shown in the PS descriptive code, provide an AL enclosure.

MAIN DISCONNECT & BRANCH CIRCUIT BREAKERS

1. Field drill flange-mounted remote operator handle if needed, to ensure handle is lockable in both the "On" and "Off" positions.

2. When the utility company provides a transformer larger than 50 KVA, verify that the available fault current is less than the circuit breaker's ampere interrupting capacity (AIC) rating and provide documentation from the electric utility provider to the Engineer.

PHOTOELECTRIC CONTROL

1. Provide photocell as listed on the MPL. Move, adjust, or shield the photocell from stray or ambient night time light to ensure proper operation. Mount photocell facing north when practical. Mount top of pole photocells as shown on Top Mounted Photocell Detail.

*ELECTRICAL SERVICE DATA

Elec. Service ID	Plan Sheet Number	Electrical Service Description	Service Conduit **Size	Service Conductors No./Size	Safety Switch Amps	Main Ckt. Bkr. Pole/Amps	Two-Pole Contractor Amps	Panelbd/ Loadcenter Amp Rating	Branch Circuit ID	Branch Ckt. Bkr. Pole/Amps	Branch Circuit Amps	KVA Load
SB 183	289	ELC SRV TY A 240/480 100(SS)AL(E)SF(U)	2"	3/#2	100	2P/100	100	N/A	Lighting NB	2P/40	26	28.1
									Lighting SB	2P/40	25	
									Underpass	1P/20	15	
NB Access	30	ELC SRV TY D 120/240 060(NS)SS(E)TS(O)	1 ¼"	3/#6	N/A	2P/60		100	Sig. Controller	1P/30	23	5.3
							30		Luminaires	2P/20	9	
									CCTV	1P/20	3	
2nd & Main	58	ELC SRV TY T 120/240 000(NS)GS(N)SP(O)	1 ¼"	3/#6	N/A	N/A	N/A	70	Flashing Beacon 1	1P/20	4	1.0
									Flashing Beacon 2	1P/20	4	

* Example only, not for construction. All new electrical services must have electrical service data chart specific to that service as shown in the plans.

** Verify service conduit size with utility. Size may change due to utility meter requirements. Ensure conduit size meets the National ELectrical Code.

EXPLANATION OF ELECTRICAL SERVICE DESCRIPTIVE CODE

ELEC SERV TY X XXX/XXX XXX (XX) XX (X) XX (X)

Schematic Type

Service Voltage V / V

Disconnect Amp Rating
000 indicates main lug only/
Typically Type T

(SS)= Safety Switch Ahead of Meter-Check with Utility
(NS)= No safety Switch Ahead of Meter-Check with Utility

Enclosure Type
GS= Galvanized steel("off the shelf")
SS= Stainless steel(Custom Enclosure)See MPL
AL= Aluminum (Custom Enclosure)See MPL

Photocell Mounting Location
(E)= Inside Service/Enclosure Mounted
(T)= Top of pole
(L)= Luminaire mounted
(N)= None/No Photocell or Lighting Contactor Required

Service Support Type
GC= Granite concrete
OC= Other concrete
TP= Timber pole
SP= Steel pole
SF= Steel frame
OT= Pole by others or paid for separately
EX= Existing pole
TS= Service on traffic signal pole
PS= Pedestal Service

O= Overhead Service Feed from Utility
U= Underground Service Feed from Utility

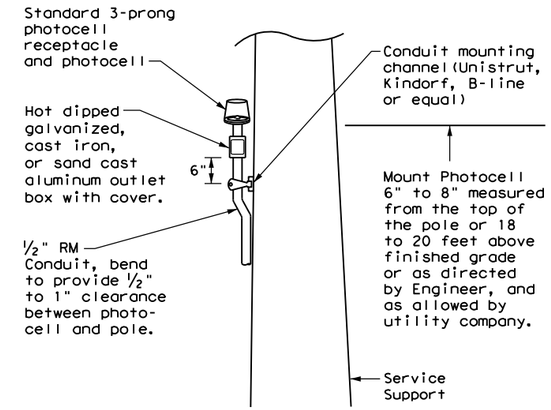

TOP MOUNTED PHOTOCELL

Install conduit strap maximum 3 feet from box. 5 foot maximum spacing between straps supporting conduit.

Texas Department of Transportation

Traffic Operations Division Standard

ELECTRICAL DETAILS SERVICE NOTES & DATA

ED(5)-14

FILE: ed5-14.dgn	DN: TxDOT	CK: TxDOT	DW: TxDOT	CK: TxDOT
©TxDOT October 2014	CONT	SECT	JOB	HIGHWAY
REVISIONS				
	DIST	COUNTY		SHEET NO.

DISCLAIMER:
The use of this standard is governed by the "Texas Engineering Practice Act". No warranty of any kind is made by TxDOT for any purpose whatsoever. TxDOT assumes no responsibility for the conversion of this standard to other formats or for incorrect results or damages resulting from its use.

DATE:
FILE:

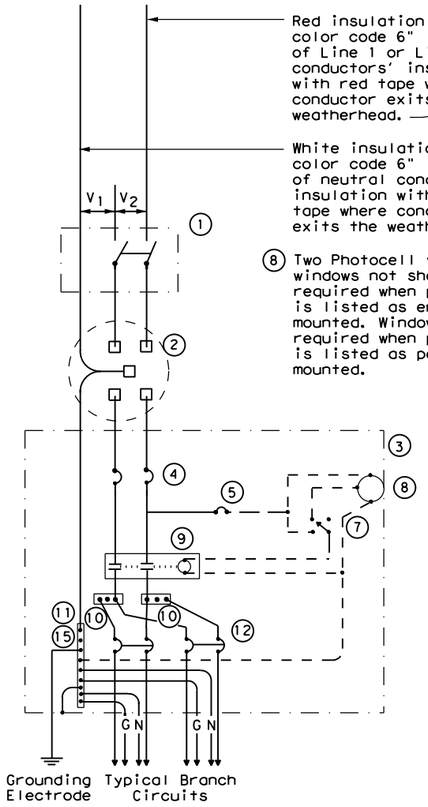

SCHEMATIC TYPE A
THREE WIRE

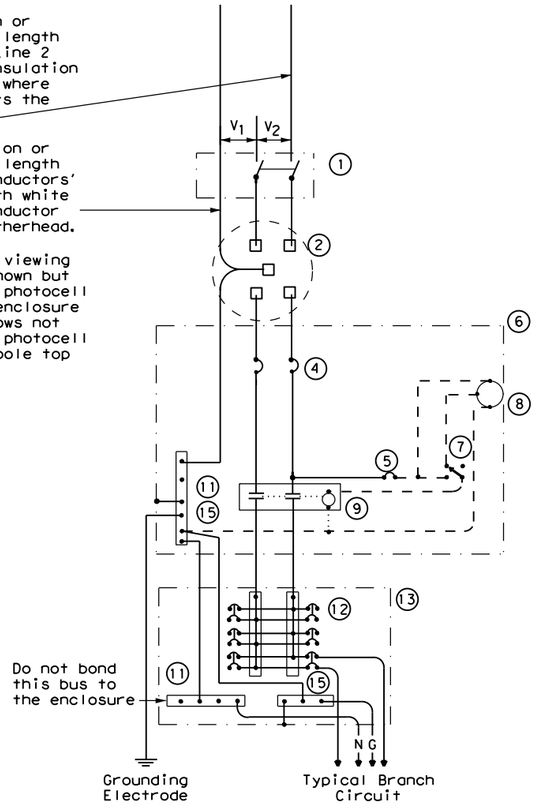

SCHEMATIC TYPE C
THREE WIRE

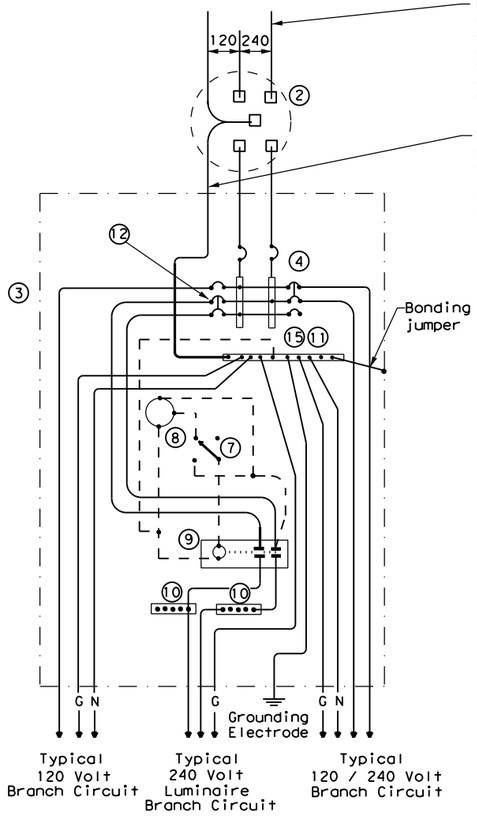

SCHEMATIC TYPE D - CUSTOM
120/240 VOLTS - THREE WIRE

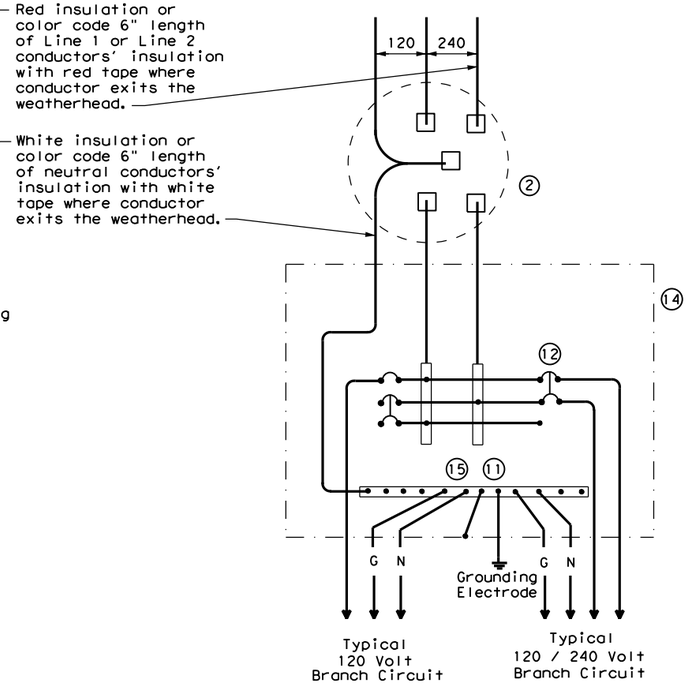

SCHEMATIC TYPE T
120/240 VOLTS - THREE WIRE

Galvanized steel-"Buy Off The Shelf" only. When required install photocell top of the pole or on luminaire only, no lighting contractor will be installed.

WIRING LEGEND	
———	Power Wiring
- - - -	Control Wiring
—N—	Neutral Conductor
—G—	Equipment grounding conductor-always required

SCHEMATIC LEGEND	
1	Safety Switch (when required)
2	Meter (when required-verify with electric utility provider)
3	Service Assembly Enclosure
4	Main Disconnect Breaker (See Electrical Service Data)
5	Circuit Breaker, 15 Amp (Control Circuit)
6	Auxiliary Enclosure
7	Control Station ("H-O-A" Switch)
8	Photo Electric Control (enclosure-mounted shown)
9	Lighting Contactor
10	Power Distribution Terminal Blocks
11	Neutral Bus
12	Branch Circuit Breaker (See Electrical Service Data)
13	Separate Circuit Breaker Panelboard
14	Load Center
15	Ground Bus

Texas Department of Transportation

Traffic Operations Division Standard

ELECTRICAL DETAILS SERVICE ENCLOSURE AND NOTES

ED(6)-14

FILE: ed6-14.dgn	DN: TxDOT	CK: TxDOT	DW: TxDOT	CK: TxDOT
©TxDOT October 2014	CONT	SECT	JOB	HIGHWAY
REVISIONS				
	DIST	COUNTY		SHEET NO.

71F

DISCLAIMER:
The use of this standard is governed by the "Texas Engineering Practice Act". No warranty of any kind is made by TxDOT for any purpose whatsoever. TxDOT assumes no responsibility for the conversion of this standard to other formats or for incorrect results or damages resulting from its use.

DATE:
FILE:

PEDESTAL SERVICE NOTES

1. Manufacture pedestal electrical services in accordance with Departmental Material Specifications (DMS)11080 "Electrical Services", 11085 "Electrical Services-Pedestal (PS)" and Item 628 "Electrical Services. "Provide pedestal electrical services as listed on the Material Producers list (MPL) on the Department's web site under "Roadway Illumination and Electrical Supplies," Item 628. Ensure all mounting hardware and installation details of services meet utility company specifications. Contact the local utility company for approval of pedestal details prior to installing the electrical pedestal service. Submit any changes required by the utility company prior to manufacturing the pedestal enclosure.

2. When a meter socket is required, provide a socket with a minimum 100 amp rating that complies with local utility requirements.

3. Provide Class A or C concrete for pedestal service foundations in accordance with Item 420, "Concrete Substructures," except that concrete will not be paid for directly but is considered subsidiary to Item 628.

4. Provide #4 reinforcing steel for foundations in accordance with Item 440, "Reinforcement for Concrete."

5. Install ½ in. X 2 ⅛ in. minimum length concrete single expansion type anchors for mounting pedestal enclosure to foundation. Anchor location to match mounting holes in each corner of enclosure. Secure each of the four corners of the pedestal enclosure to the anchors in the foundation with a ½ in. galvanized or stainless steel machine thread bolt, a properly sized locknut and a flat washer.

6. Finish top of concrete foundation in a neat and workmanlike manner. If leveling washers are used, ensure no more than ⅛ in. gap at any corner. Do not exceed a maximum dip or rise in the foundation of ⅛ in. per foot. When properly installed, ensure the top of the service enclosure is level front to back and side to side within ¼ in. Repair rocking or movement of the service enclosure at no additional cost to the department.

7. Do not use liquidtight flexible metal conduit (LFMC) on pedestal type services.

8. Ensure all elbows in the foundation are sized as per utility provider's conduit requirements for underground conduit and feeders. PVC extensions may be installed provided the ends of the rigid metal conduits are more than 2 in. below the top of the concrete foundation. Where extension conduits are metal, grounding bushings must be installed with a bonding jumper properly terminated.

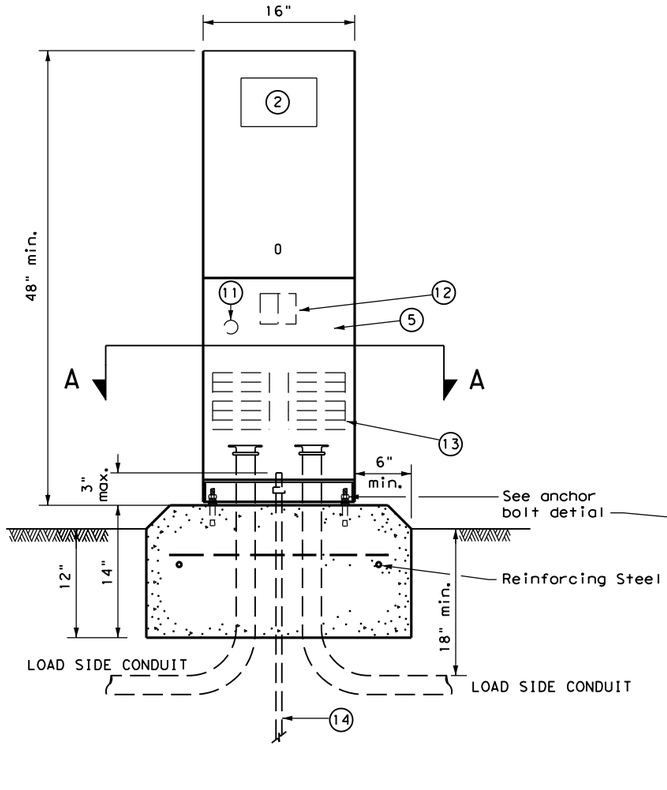

FRONT VIEW

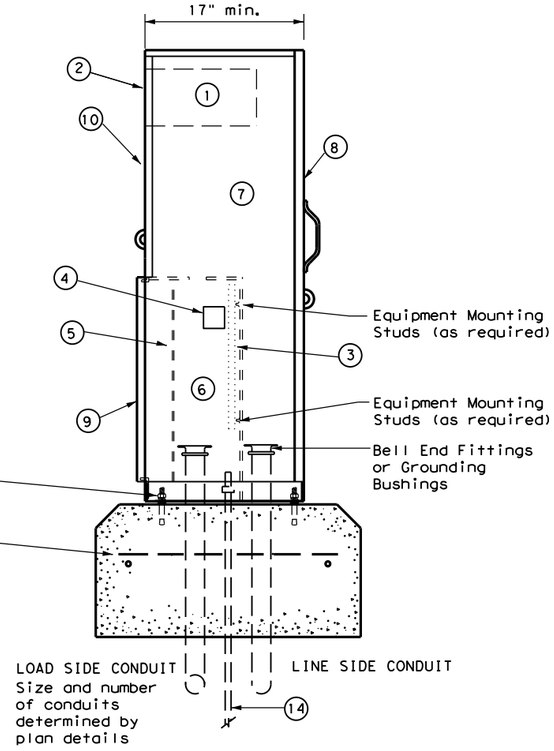

SIDE VIEW

TYPE C shown, TYPE A similar except that TYPE A shall have individual circuit breakers (CB) mounted on an equipment mounting panel. CB Handles shall protrude through hinged deadfront trim.

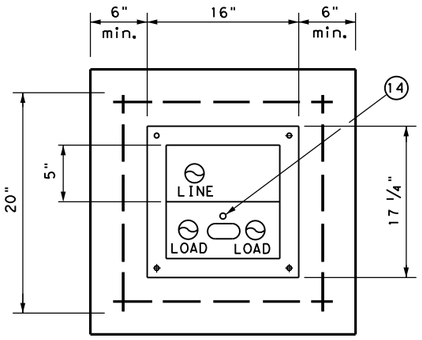

SECTION A-A

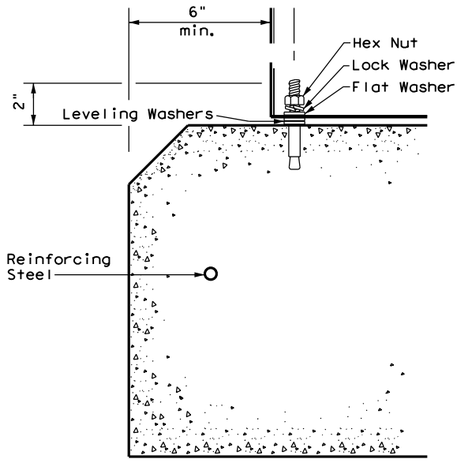

ANCHOR BOLT DETAIL

LEGEND	
1	Meter Socket, (when required)
2	Meter Socket Window, (when required)
3	Equipment Mounting Panel
4	Photo Electric Control Window, (When required)
5	Hinged Deadfront Trim
6	Load Side Conduit Trim
7	Line Side Conduit Area
8	Utility Access Door, with handle
9	Pedestal Door
10	Hinged Meter Access
11	Control Station (H-O-A Switch)
12	Main Disconnect
13	Branch Circuit Breakers
14	Copper Clad Ground Rod - 5/8" X 10'

Texas Department of Transportation

Traffic Operations Division Standard

ELECTRICAL DETAILS
ELECTRICAL SERVICE SUPPORT
PEDESTAL SERVICE TYPE PS

ED(9)-14

FILE: ed9-14.dgn	DN: TxDOT	CK: TxDOT	DW: TxDOT	CK: TxDOT	
©TxDOT October 2014	CONT	SECT	JOB	HIGHWAY	
REVISIONS					
	DIST	COUNTY		SHEET NO.	

71J

DISCLAIMER:
The use of this standard is governed by the "Texas Engineering Practice Act". No warranty of any kind is made by TxDOT for any purpose whatsoever. TxDOT assumes no responsibility for the conversion of this standard to other formats or for incorrect results or damages resulting from its use.

ROADWAY ILLUMINATION ASSEMBLY NOTES

1. Details apply to roadway lighting installations bid or referenced under Item 610, "Roadway Illumination Assemblies." Provide, furnish, and install all other materials not shown on the plans which may be necessary for complete and proper construction. Where manufacturers provide warranties or guarantees as a customary trade practice, furnish to the State such warranties or guarantees.

2. The locations of poles and fixtures may be shifted by the Engineer to accommodate local conditions. Install or remove poles and luminaires located near overhead electrical lines using established industry and utility safety practices and in accordance with laws governing such work. Consult with the appropriate utility company prior to beginning such work.

3. Provide new and unused materials. Ensure that all materials and installations comply with the applicable articles of the National Electrical Code (NEC),TxDOT standards and specifications, National Electrical Manufacturers Association (NEMA),and are listed by Underwriters Laboratories (UL) or a Nationally Recognized Testing Lab (NRTL). NRTLs such as Canadian Standard Association, Intertek Testing Services NA Inc., or FM Approvals LLC can be considered equivalent to UL. Faulty fabrication or poor workmanship in any material, equipment, or installation is justification for rejection.

4. Provide Roadway Illumination Light Fixtures as per TxDOT Departmental Material Specification (DMS) 11010, Item 610, and as shown on the Material Producers List (MPL) for Roadway Illumination and Electrical Supplies.

5. Fabricate steel roadway illumination poles in accordance with Roadway Illumination Poles (RIP) standards and Item 610. Poles fabricated according to RIP standards do not require shop drawing submittals.

   a. Alternate designs to RIP standards or the use of aluminum to fabricate poles will require the submission of shop drawings electronically. For instructions on submitting shop drawings electronically see "Guide to Electronic Shop Drawing Submittal" on the TxDOT web site.

   b. Limitations on use of the RIP standard: The RIP standard details were developed for installations in locations where the 3-second gust basic maximum wind speed is 110 mph, and where the elevation of the base of the pole is less than (i.e. not more than) 25' above the elevation of the surrounding terrain, in accordance with the "AASHTO Standard Specifications for Structural Supports for Highway Signs, Luminaires and Traffic Signals," 6th Edition (2013) of the AASHTO Design Specifications. For poles to be installed in regions where the maximum basic wind speed exceeds 110 mph or to be mounted more than 25' above the surrounding terrain, provide poles meeting the following requirements:

      i. Submittals. Following the electronic shop drawing submittal process (see Guide to Electronic Shop Drawing Submittal on the TxDOT web site), submit to the Engineer for approval fabrication drawings and calculations for the poles, sealed by a Texas licensed professional engineer (P.E.).

      ii. Luminaire Structural Support Requirements. Provide light poles, arms, and anchor bolt assemblies with a 25 year design life to safely resist dead loads, ice loads and the required basic wind speeds at the location of installation in accordance with the 6th edition (2013) of the AASHTO Design Specifications. For transformer base poles, include transformer base and connecting hardware in calculations and shop drawing submittals. Structurally test all transformer bases to resist the theoretical plastic moment capacity of the pole. Submit certification of the plastic moment load test and FHWA breakaway requirement test of the model of base being furnished with the shop drawings. Show breakaway base model number, manufacturer's name, and logo on shop drawings. Include on manufacturer's shop drawings the ASTM designations for all materials to be used.

6. For both transformer and shoe-base type illumination poles, provide and install double-pole breakaway fuse holders as specified by DMS-11040. Breakaway fuse holders are listed on the MPL for Roadway Illumination and Electrical Supplies under Items 610 & 620. Provide 10 amp time delay fuses for breakaway connectors in light poles, or inside the light fixture for underpass luminaires. In each pole, connect luminaires to the breakaway connector with continuous stranded 12 AWG copper conductors as listed on the MPL. Bond all equipment grounding conductors together and to the ground lug in the transformer base or hand hole.

7. Tighten anchor bolts for shoe base, concrete traffic barrier base, and bridge mount roadway illumination poles, in accordance with Item 449.

8. Install T-Base with following procedure:

   a. Anchor Bolt Tightening.

      i. Coat the threads of the anchor bolts with electrically conductive lubricant.

      ii. Place the T-base over the anchor bolts. Foundation must be level and flat. The maximum permissible gap under any one corner of the t-base is 1/8" before nuts are tightened.

      iii. Coat the bearing surfaces of the nuts and washers with electrically conductive lubricant. Install (1) 1/2" hold down washer, (1) lock washer, and (1) nut on each anchor bolt. Turn the nuts onto the bolts so that each is hand-tight against the washer.

      iv. Using a torque wrench, tighten each nut to 150 ft-lb. Uniform contact is required between the foundation and the T-base in the corner regions of the T-base, and all corner gaps must be closed after applying torque. If a gap still exists after torquing to 150 ft-lbs, continue torquing each bolt incrementally until gap is closed or maximum allowable torque of 250 ft. pound is reached, whichever comes first. If 250 ft-lbs is not enough to close the gap the foundation must be leveled. Gaps along the straight sides of the T-bases and the foundation are permissible. Ensure that no high point of contact occurs between the straight sides of the T-base and the foundation.

      v. Check top of T-base for level. If not level then foundation must be leveled.

   b. Top Bolt Procedure

      i. Erect pole over T-base with crane. Coat bolts, nuts, washers, and lock washers with electrically conductive lubricant.

      ii. Install bolts and 1/2" connecting washers from the inside of the T-base, thread up through the pole base. Install flat washers, lock washers and nuts snug tight according to Item 447, "Structural Bolting."

      iii. Tighten each nut to 150 ft-lb. using a torque wrench.

   c. Level and Plumb

      i. Ensure pole is plumb and mast arm is perpendicular to the roadway according to plans to within 5 degrees.

9. Construct luminaire pole foundations in accordance with Item 416, "Drilled Shaft Foundations," and TxDOT standard sheet RID(2).

10. Provide and install underpass luminaires in accordance with Item 610, DMS-11010, and TxDOT standard sheet RID(3). Typical luminaire size for underpass luminaires is 150W HPS or 150W EQ LED.

11. Mount luminaires on arms level as shown by the luminaire level indicator.

12. Orient luminaires perpendicular to the roadway intended to be lit unless otherwise shown on the plans.

Wiring Diagram Notes:

(1) Use 1/2 in.-13 UNC threaded, copper or tin-plated copper, pole bonding connector, sized appropriately for conductors, bonded to T-base, or use ground lug in handhole as available.

(2) Use pre-qualified two-pole breakaway connectors for all luminaire pole installations. For luminaires fed by a circuit with a neutral conductor, use double pole breakaway connectors with the neutral side unfused and marked white.

(3) Split Bolt or other connector.

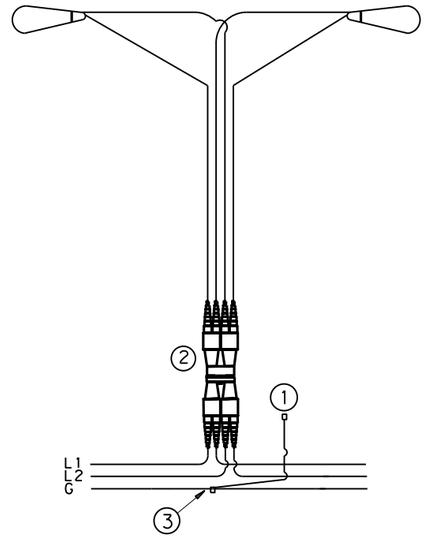

L1,L2 = Hot Conductors
G = Grounding Conductor

TYPICAL WIRING DIAGRAM

LUMINAIRES SERVED AT 480V ON 240/480 VOLT SERVICE OR LUMINAIRES SERVED AT 240V FOR 120/240 VOLT SERVICE.

Decorative LED Lighting Notes:

1. LED Drivers in Remote Outdoor enclosures (for drivers that do not include an enclosure as part of a factory assembly):

   a. Provide NEMA 3R outdoor enclosure or as approved.

   b. Install enclosure at least 12" above ground or other horizontal surface. Mount vertically or on ceiling, and avoid direct sun where possible.

   c. Install drivers with at least 2 inches of space from enclosure walls.

   d. For multiple drivers in an enclosure, provide at least 4 inches side to side and 1 inch end to end from other drivers or electronic equipment

   e. For drivers mounted on back wall of enclosure, mount enclosure on 1 5/8" strut or other standoff to dissipate heat, or mount driver to side of the enclosure or to the metal cover.

   f. Provide remote drivers with a maximum of 100 watts

   g. Provide drivers with documentation of 100,000 hr lifetime at Tcase of 65C or higher.

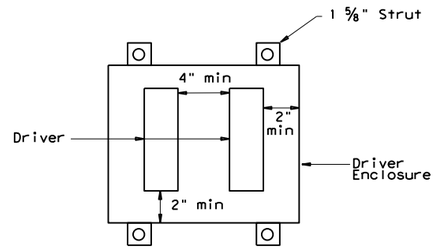

Driver Spacing In Remote Enclosure

Texas Department of Transportation

Traffic Safety Division Standard

ROADWAY ILLUMINATION DETAILS

RID(1)-20

FILE: rid1-20.dgn	DN:	CK:	DW:	CK:
©TxDOT January 2007	CONT	SECT	JOB	HIGHWAY
REVISIONS				
7-17	DIST	COUNTY		SHEET NO.
12-20				

72A

DATE:
FILE:

DISCLAIMER:
The use of this standard is governed by the "Texas Engineering Practice Act". No warranty of any kind is made by TxDOT for any purpose whatsoever. TxDOT assumes no responsibility for the conversion of this standard to other formats or for incorrect results or damages resulting from its use.

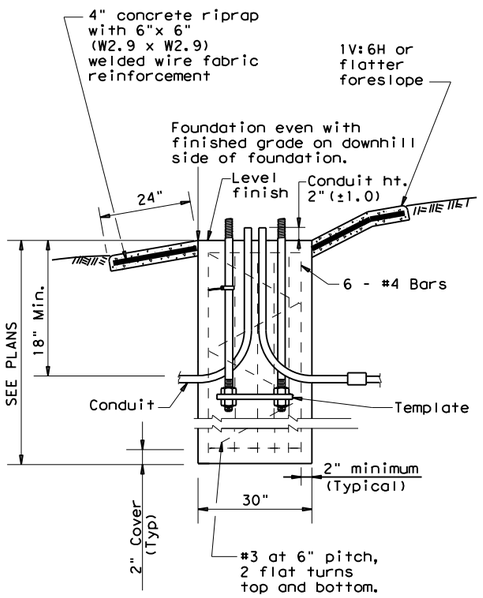

SECTION A-A
SHOWING SLOPED GRADE

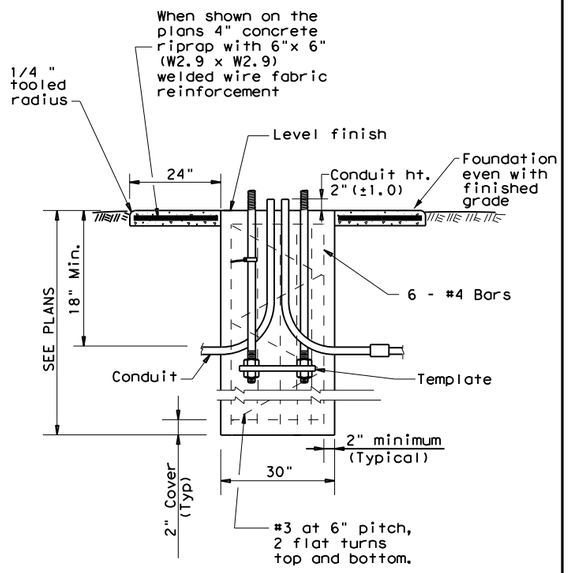

SECTION A-A
SHOWING CONSTANT GRADE

TABLE 1

ANCHOR BOLTS

POLE MOUNTING HEIGHT	BOLT CIRCLE		ANCHOR BOLT SIZE
	Shoe Base	T-Base	
<40 ft.	13 in.	14 in.	1in. x 30in.
40-50 ft.	15 in.	17 ¼in.	1 ¼in. x 30in.

TABLE 2

RECOMMENDED FOUNDATION LENGTHS
(See note 1)

MOUNTING HEIGHT	TEXAS CONE PENETROMETER N Blows/ft		
	10	15	40
≤20 ft.	6′	6′	6′
>20 ft. to 30 ft.	8′	6′	6′
>30 ft. to 40 ft.	8′	8′	6′
>40 ft. to 50 ft.	10′	8′	6′

TABLE 3

PAY QUANTITY OF RIPRAP PER FOUNDATION (Install only when shown on the plans)

Foundation Diameter	RIPRAP DIAMETER	RIPRAP (CONC) (CL B)
30 in.	78 in.	0.35 CY

GENERAL NOTES:

1. "Recommended Foundation Lengths" table is for information purposes only. Foundation lengths shall be as shown on the plans, or as directed by the Engineer. Foundations will be paid for under Item 416, "Drilled Shaft Foundations," unless otherwise shown on the plans.
2. Erect roadway illumination assembly poles plumb and true. Form and level the top 6" of the foundation so the pole will be plumb. Use leveling nuts to plumb shoe base poles. Do not use shims or leveling nuts under transformer bases. Do not grout between baseplate and the foundation.
3. Ensure Class 2A and 2B fit for anchor bolts and nuts. Tap and chase nuts after galvanizing. Anchor bolt body with rolled threads need not be full size.
4. Use appropriate class of concrete as specified in Items 416 and 432. Concrete for riprap may be upgraded to Class C at no extra cost to the Department.
5. Place riprap around the foundation when called for elsewhere in the plans. Riprap will be paid for under Item 432.
6. Locate breakaway roadway illumination assemblies as shown in the placement table, unless otherwise dimensioned on the plans. Protect non-breakaway illumination assemblies from vehicular impact (i.e. 2.5 ft. behind guard rail or mounted on traffic barrier), or located outside the clear zone, except that 2.5 ft. from curb face is minimum desired for light poles on city streets, 45 mph or less. See Roadway Design Manual for further information.
7. Use 4 hold down and 4 connecting washers on transformer base poles as recommended by the manufacturer and supplied with base.
8. Install a minimum of 2 conduits in each foundation. See lighting layout sheets for locations of foundations with more than 2 conduits. Cap unused conduits in foundations on both ends.
9. Conduit location in foundations is critical for breakaway devices. Place conduits 2 in. apart on centerline as shown.
10. Bond anchor bolt to rebar cage with #6 bare stranded copper conductor. Use listed mechanical connectors rated for embedment in concrete. The bonded steel in the foundation creates a concrete encased grounding electrode which replaces the ground rod.
11. Grade earthwork around T-base foundations even with the finished grade as shown in Section A-A to ensure proper function of the breakaway device. Use riprap on T-base foundations that are located on sloped grades, and as shown on the plans for level grades.

TABLE 4

BREAKAWAY POLE PLACEMENT (See note 6)

ROADWAY FUNCTIONAL CLASSIFICATION	** POLE OFFSET (DISTANCE TO FACE OF TRANSFORMER BASE)
Freeway Mainlanes (roadway with full control of access)	15 ft. (minimum and typical) from lane edge
All curbed, 45 mph or less design speed	2.5 ft. minimum (15 ft. desirable) from curb face
All others	10 ft. minimum*(15 ft. desirable) from lane edge

* or as close to ROW line as is practical

** provide 2/5 of the luminaire mounting height behind the pole for "falling area" to prevent encroachment on the other travel lanes. See design guidelines.

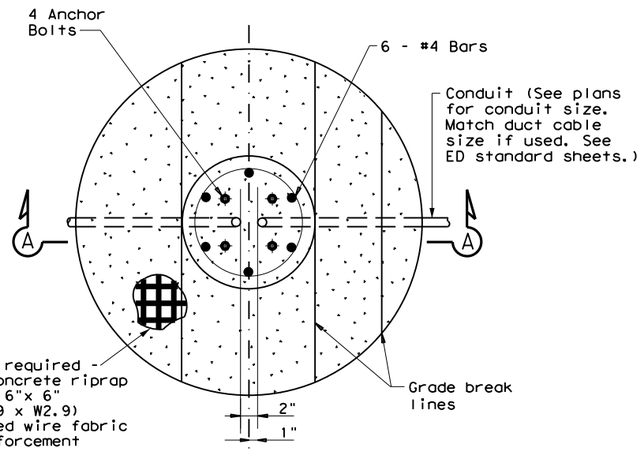

FOUNDATION DETAIL

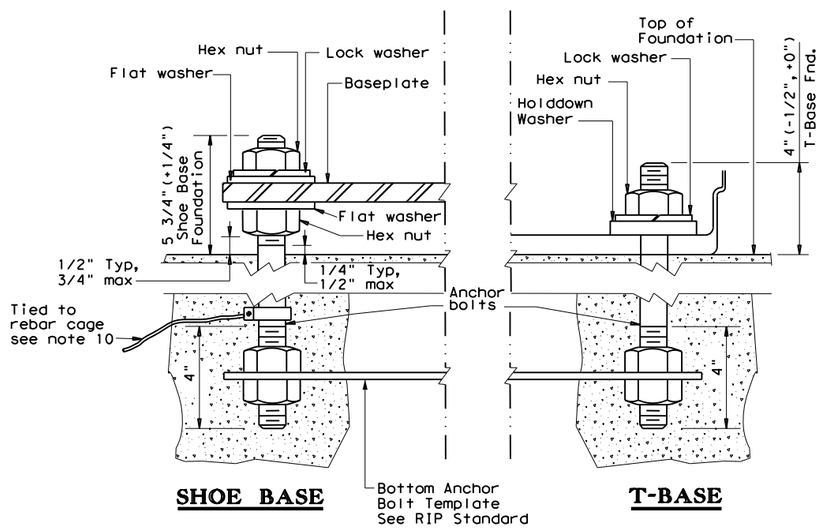

SHOE BASE T-BASE

ANCHOR BOLT DETAIL

Texas Department of Transportation

Traffic Safety Division Standard

ROADWAY ILLUMINATION DETAILS
(RDWY ILLUM FOUNDATIONS)
RID(2)-20

FILE: rid2-20.dgn	DN:	CK:	DW:	CK:
©TxDOT January 2007	CONT	SECT	JOB	HIGHWAY
REVISIONS 1-11 7-17 12-20	DIST	COUNTY		SHEET NO.
72B				

DATE:
FILE:

DISCLAIMER:
The use of this standard is governed by the "Texas Engineering Practice Act". No warranty of any kind is made by TxDOT for any purpose whatsoever. TxDOT assumes no responsibility for the conversion of this standard to other formats or for incorrect results or damages resulting from its use.

DATE:
FILE:

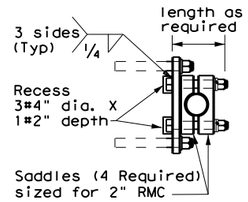

SECTION A-A

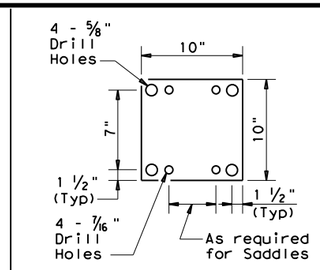

MOUNTING PLATE
(ASTM A-36 or better)

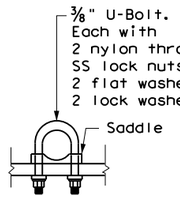

CLAMP DETAIL
(2 Req'd)

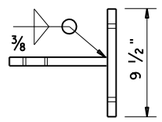

PLAN VIEW

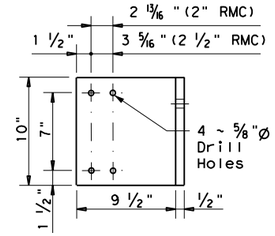

FRONT

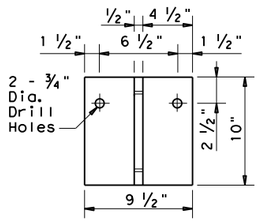

SIDE

BRACKET DETAIL
Make from 1/2" plate (ASTM A-36 or better)

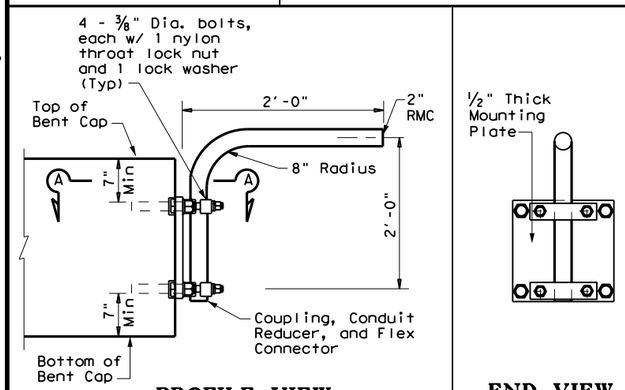

PROFILE VIEW
Or as Required
(See Note A.3)

END VIEW

UNDERPASS LIGHTING ARM

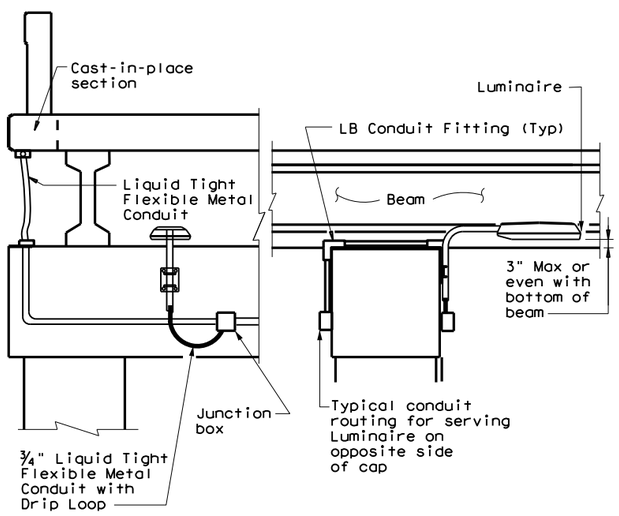

IN RD IL AM (U/P)(TY 1)
If bridge has pre-cast panels under deck, run circuit under deck edge.

UNDERPASS LIGHTING TYPE 1

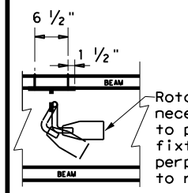

PLAN VIEW

FIXTURE ORIENTATION

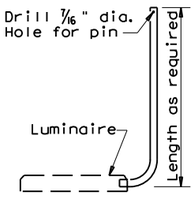

SIDE

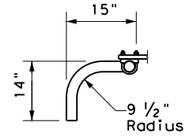

PLAN VIEW

ARM DETAIL

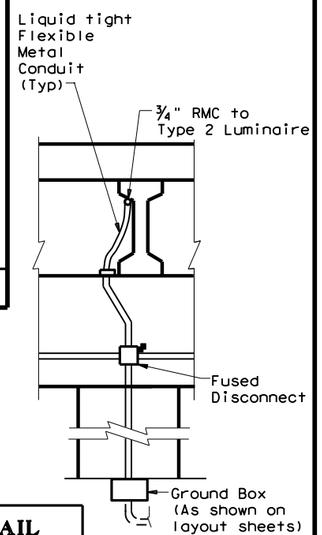

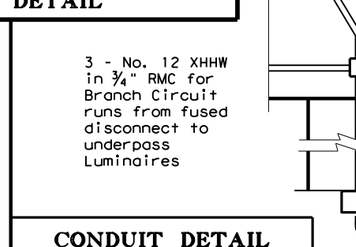

CONDUIT DETAIL

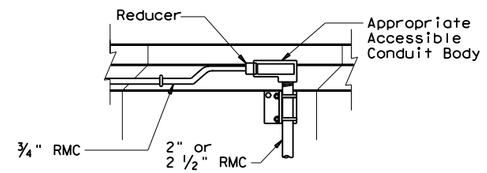

CONDUIT CONNECTION PROFILE

FRONT
(Beam height greater than 54")

FRONT
(Beam height equal to or less than 54")

TABLE 5	
LOCATION OF UNDERPASS LIGHT MOUNTING BRACKET TABLE	
SPAN LENGTH	MINIMUM DISTANCE
≤ 50'	10'-0"
50' - 70'	15'-0"
70' - 90'	20'-0"
> 90'	25'-0"

IN RD IL AM (U/P)(TY 2)

LOCATION OF UNDERPASS LIGHT MOUNTING BRACKET

UNDERPASS LIGHTING TYPE 2

GENERAL NOTES:

A. ALL 150 watt HPS and 150 watt equivalent LED Luminaires

1. Luminaire locations, conduit and conductor sizes and routing are typical and diagrammatic only. See project layout sheets for specific details.
2. Conduit will be paid for under Item 618, "Conduit" and conductors will be paid for under Item 620, "Electrical Conductors," unless otherwise shown on the plans.
3. Adjust conduit in saddles to place fixture height and orientation as required. See fixture orientation detail and plans. Where practicable, place luminaires so the bottom of luminaire is above the bottom of the beam, maximum of 3 in. (See detail UNDERPASS LIGHTING ARM TYPE 2)
4. Except as noted, galvanize all structural steel and exposed bolts, nuts, and washers in accordance with Item 445 "Galvanizing".
5. Fabrication of brackets and support arms will not be paid for directly but is subsidiary to Item 610, "Roadway Illumination Assemblies."
6. Install a heavy duty NEMA 3R fused disconnect or breaker enclosure rated at 30 amps and 480 volts to switch underpass luminaires as shown on plans, with at least one per bridge circuit. Install 20 amp time-delay fuses or inverse-time circuit breakers. Mount disconnect or breaker enclosure 10 ft. (min) above grade on columns or bent caps as approved by the Department. Modify disconnect to allow padlocking in the "ON" and "OFF" positions. Padlocks and disconnect switches or circuit breakers for underpass fixtures will not be paid for directly but are subsidiary to the various bid items of the contract.
7. Conduit on columns, caps, and slab is shown surface mounted. For new columns and caps, embed PVC conduit in concrete. Bond and ground metal junction boxes and conduit.

B. TYPE 1

1. Provide 2 in. rigid metal conduit (2.375" O.D., 0.146" wall) for Type 1 arm shaft.
2. Use 3/8 in. stainless steel bolt or stud non-epoxy type expansion anchors for concrete for Type 1 mounting. Except as noted, provide an allowable 2650 lbs minimum pull-out force (after consideration of adjustment factors for edge distance and bolt spacing) for each anchor. Install each anchor to the embedment depth recommended by the manufacturer.
3. Attach conduit to plate with 4 saddles, four - 3/8 in. diameter bolts, nylon throat lock nuts, and lock washers.

C. TYPE 2

1. Provide 2 in. rigid metal conduit (2.375" O.D., 0.146" wall) or provide a combination of 2 1/2 in. (2.875" O.D., 0.193" wall) and 2 in. (2.375" O.D., 0.146" wall) rigid metal conduits with a reducing bushing as beam height stipulated for Type 2 arm shaft. Field cutting and threading will be permitted. Paint cut and threaded areas with zinc rich paint after conduit is connected to adjacent fitting.
2. Connecting conduit may be strapped to tapered section only of precast beams as shown. Anchor as approved by the Engineer. Maximum anchor depth is 1 in.
3. Indiscriminate drilling into precast concrete beams may result in reduced beam strength. Use drilling location and method as directed by the Engineer. See Location of Underpass Lighting Mounting Bracket detail. The locations shown in the table are such that reinforcing strands will not be damaged.

Texas Department of Transportation

Traffic Safety Division Standard

ROADWAY ILLUMINATION DETAILS
(UNDERPASS LIGHT FIXTURES)

RID(3)-20

FILE:	rid3-20.dgn	DN: TxDOT	CK: TxDOT	DW: TxDOT	CK: TxDOT
© TxDOT	May 2013	CONT	SECT	JOB	HIGHWAY
REVISIONS					
2-14		DIST	COUNTY		SHEET NO.
7-17					
12-20					

72C

DISCLAIMER:
The use of this standard is governed by the "Texas Engineering Practice Act". No warranty of any kind is made by TxDOT for any purpose whatsoever. TxDOT assumes no responsibility for the conversion of this standard to other formats or for incorrect results or damages resulting from its use.

SHIPPING PARTS LIST - POLES AND LUMINAIRE ARMS

Nominal Mounting Ht. (ft)	Shoe Base Designation				Quantity	T-Base Designation				Quantity	CSB/SSCB Mounted Designation				Quantity
	Pole	A1	A2	Luminaire		Pole	A1	A2	Luminaire		Pole	A1	A2	Luminaire	
20	(Type SA 20 S - 4)			(150W EQ) LED		(Type SA 20 T - 4)			(150W EQ) LED						
	(Type SA 20 S - 4 - 4)			(150W EQ) LED		(Type SA 20 T - 4 - 4)			(150W EQ) LED						
30	(Type SA 30 S - 4)			(250W EQ) LED		(Type SA 30 T - 4)			(250W EQ) LED		(Type SP 28 S - 4)			(250W EQ) LED	
	(Type SA 30 S - 4 - 4)			(250W EQ) LED		(Type SA 30 T - 4 - 4)			(250W EQ) LED		(Type SP 28 S - 4 - 4)			(250W EQ) LED	
	(Type SA 30 S - 8)			(250W EQ) LED		(Type SA 30 T - 8)			(250W EQ) LED		(Type SP 28 S - 8)			(250W EQ) LED	
	(Type SA 30 S - 8 - 8)			(250W EQ) LED		(Type SA 30 T - 8 - 8)			(250W EQ) LED		(Type SP 28 S - 8 - 8)			(250W EQ) LED	
40	(Type SA 40 S - 4)			(250W EQ) LED		(Type SA 40 T - 4)			(250W EQ) LED		(Type SP 38 S - 4)			(250W EQ) LED	
	(Type SA 40 S - 4 - 4)			(250W EQ) LED		(Type SA 40 T - 4 - 4)			(250W EQ) LED		(Type SP 38 S - 4 - 4)			(250W EQ) LED	
	(Type SA 40 S - 8)			(250W EQ) LED		(Type SA 40 T - 8)			(250W EQ) LED		(Type SP 38 S - 8)			(250W EQ) LED	
	(Type SA 40 S - 8 - 8)			(250W EQ) LED		(Type SA 40 T - 8 - 8)			(250W EQ) LED		(Type SP 38 S - 8 - 8)			(250W EQ) LED	
	(Type SA 40 S - 10)			(250W EQ) LED		(Type SA 40 T - 10)			(250W EQ) LED		(Type SP 38 S - 10)			(250W EQ) LED	
	(Type SA 40 S - 10 - 10)			(250W EQ) LED		(Type SA 40 T - 10 - 10)			(250W EQ) LED		(Type SP 38 S - 10 - 10)			(250W EQ) LED	
	(Type SA 40 S - 12)			(250W EQ) LED		(Type SA 40 T - 12)			(250W EQ) LED		(Type SP 38 S - 12)			(250W EQ) LED	
	(Type SA 40 S - 12 - 12)			(250W EQ) LED		(Type SA 40 T - 12 - 12)			(250W EQ) LED		(Type SP 38 S - 12 - 12)			(250W EQ) LED	
50	(Type SA 50 S - 4)			(400W EQ) LED		(Type SA 50 T - 4)			(400W EQ) LED		(Type SP 48 S - 4)			(400W EQ) LED	
	(Type SA 50 S - 4 - 4)			(400W EQ) LED		(Type SA 50 T - 4 - 4)			(400W EQ) LED		(Type SP 48 S - 4 - 4)			(400W EQ) LED	
	(Type SA 50 S - 8)			(400W EQ) LED		(Type SA 50 T - 8)			(400W EQ) LED		(Type SP 48 S - 8)			(400W EQ) LED	
	(Type SA 50 S - 8 - 8)			(400W EQ) LED		(Type SA 50 T - 8 - 8)			(400W EQ) LED		(Type SP 48 S - 8 - 8)			(400W EQ) LED	
	(Type SA 50 S - 10)			(400W EQ) LED		(Type SA 50 T - 10)			(400W EQ) LED		(Type SP 48 S - 10)			(400W EQ) LED	
	(Type SA 50 S - 10 - 10)			(400W EQ) LED		(Type SA 50 T - 10 - 10)			(400W EQ) LED		(Type SP 48 S - 10 - 10)			(400W EQ) LED	
	(Type SA 50 S - 12)			(400W EQ) LED		(Type SA 50 T - 12)			(400W EQ) LED		(Type SP 48 S - 12)			(400W EQ) LED	
	(Type SA 50 S - 12 - 12)			(400W EQ) LED		(Type SA 50 T - 12 - 12)			(400W EQ) LED		(Type SP 48 S - 12 - 12)			(400W EQ) LED	

OTHER Designation				Quantity
Pole	A1	A2	Luminaire	

GENERAL NOTES:

1. All work, materials and services not shown on the plans which may be necessary for complete and proper construction shall be performed, furnished and installed by the Contractor. Faulty fabrication or poor workmanship in any material, equipment or installation will be considered justification for rejection. Where manufacturers provide warranties or guarantees as a customary trade practice, furnish to the Department such warranties or guarantees.

2. The location of poles and fixtures are diagrammatic only and may be shifted by the Engineer to accommodate local conditions. Install or remove poles and luminaires located near overhead electrical lines using established industry and utility safety practices and in accordance with laws governing such work. Consult with the appropriate utility company prior to beginning such work.

3. Standard Steel Pole Designs. Steel poles fabricated in accordance with the details and dimensions shown herein, shall be considered standard designs. Submission of shop drawings and design calculations for standard designs is not required.

4. Optional Steel Pole Designs. Multi-sided steel poles may be allowed as optional designs, if steel poles are permitted or required, pending approval by the Department as outlined below.

   a. Shop Drawings. Optional designs require submission of shop drawings and design calculations bearing the seal of an engineer licensed in the State of Texas, in accordance with Item 441, "Steel Structures." The Department may elect to pre-approve some shop drawings for optionally designed poles. Submission of shop drawings and design calculations is not required for structures fabricated in accordance with the details of shop drawings on the pre-approved list maintained by the TxDOT Traffic Operations Division. Any deviation from the pre-approved shop drawings will require submission of shop drawings of the complete assembly and design calculations as described above.
   b. Structural Support Design for Luminaires. Lighting support structures shall be designed for a 25 year design life in accordance with the 2001 Edition of the AASHTO "Standard Specifications for Structural Supports for Highway Signs, Luminaires and Traffic Signals." All poles shall be designed for 110 mph 3-second gust wind speeds. An additional 1.14 gust factor shall be applied to the wind loads. For transformer base poles, fabricator shall include transformer base and connecting hardware in design calculations and shop drawing submittals. All transformer bases shall have been structurally tested to resist the theoretical plastic moment capacity of the pole. Certification of the plastic moment load test and FHWA breakaway requirement test of the model of base being furnished shall be submitted with the shop drawings. Shop drawings shall show breakaway base model number, and manufacturer's name and logo. Manufacturer's shop drawings shall include the ASTM designations for all materials to be used.

   c. Mast Arm Attachments. All poles and attachments shall be structurally designed to support two 12-foot mast arms and luminaires. Poles shall be supplied with mast arm combinations as shown in the plans. All mast arms shall be designed for a 60-pound luminaire having an effective projected area of 1.6 square feet.

   d. Anchor Bolt Assembly. Anchor bolt assemblies for optionally designed poles shall be the same as those shown herein.

5. Aluminum Pole Designs. Aluminum pole designs may be allowed, if aluminum poles are permitted or required, pending approval by the Department as outlined below.

   a. Meet all of the requirements stated above for optional steel pole designs and the following:
      1. Aluminum poles shall be fabricated in accordance with "Structural Welding Code-Aluminum" AWS D1.2.
      2. Aluminum pole designs shall use the same anchor bolt assembly and be subject to the same geometric restraints and other requirements for steel poles specified herein.
      3. Aluminum poles shall be equipped with vibration mitigation devices, as approved by the engineer.
      4. Pole components shall be constructed using the following material:
         Shaft: ASTM B221 or B241 Alloy 6063-T6, ASTM B209 Alloy 5086-H34, ASTM B221 Alloy 6005-T5.
         Base Flange: ASTM B26 Alloy 356.0-T6 or ASTM B108 Alloy 356.0-T6 (Yield strength test required).
         Mast Arm Fitting: ASTM B209 Alloy 6061-T6 or ASTM B221 Alloy 6005-T5.
         Mast Arms: ASTM B241 Alloy 6061-T6 or Alloy 6063-T6.
         Pole Cap: ASTM B209 Alloy 5086-H32 or ASTM B108 or B26 Alloy 356.0-T6.
         Bolts: Stainless Steel AISI 300 series. Bolts threading into aluminum threads shall be treated with anti-seize compound, Never-Seez Compound, Permatex 133K or equal.

6. Special Designs. Poles with architectural treatments shall meet the requirements shown elsewhere in the plans.

7. Luminaire Mounting Height. Actual luminaire mounting height shall be the nominal mounting height given on RIP(2) for all pole-arm combinations except for poles with 4 ft. luminaire arms, which shall be 3'-0" lower than the nominal height, unless otherwise shown or directed.

EXPLANATION OF ROADWAY ILLUMINATION ASSEMBLY DESIGNATIONS

(TYPE SA 50 T - X - X) (400W EQ) LED

SA: Pole and mast arm may be steel or aluminum.
ST: Pole and mast arm must be steel.
AL: Pole and mast arm must be aluminum.
SP: Special (ovalized) steel or aluminum pole for installing on CSB or SSCB. See standard sheet CSB (4), or SSCB (4).

Two numerical digits denote nominal mounting height in feet.

Next letter denotes type of base, (S-Shoe Base, T-Transformer Base, or B-Shoe Base Bridge Mount)

First number denotes length of mast arm in feet.

Use of second mast arm is indicated by second dashed number which denotes length in feet.

Luminaire rating in watts (i.e. 400W). Equivalent wattage LED fixtures will include EQ (i.e. 400W EQ)

Last letters indicate light source (S - High Pressure Sodium; LED - LED luminaire)

DATE:
FILE:

SHEET 1 OF 4

Texas Department of Transportation

Traffic Operations Division Standard

ROADWAY ILLUMINATION POLES

RIP(1)-17

FILE: rip-17.dgn	DN:	CK:	DW:	CK:
©TxDOT January 2007	CONT	SECT	JOB	HIGHWAY
REVISIONS 7-17	DIST	COUNTY		SHEET NO.

73A

DISCLAIMER:
The use of this standard is governed by the "Texas Engineering Practice Act". No warranty of any kind is made by TxDOT for any purpose whatsoever. TxDOT assumes no responsibility for the conversion of this standard to other formats or for incorrect results or damages resulting from its use.

DATE:
FILE:

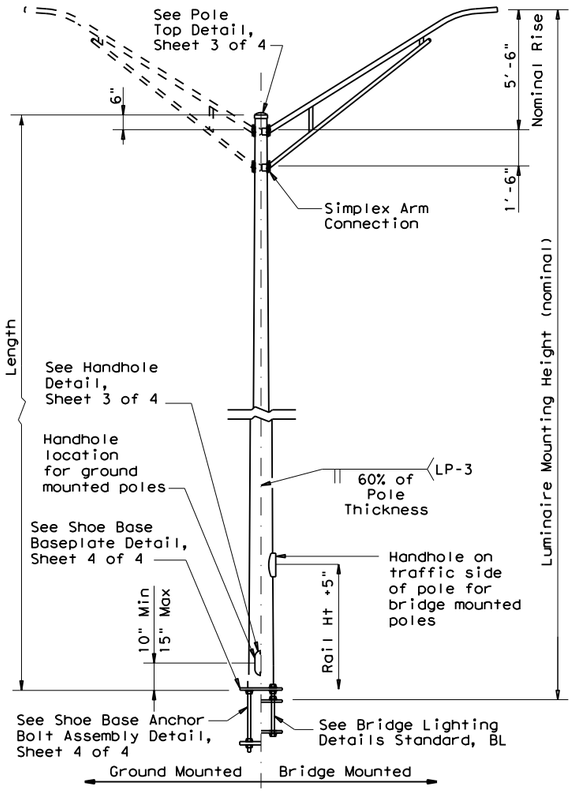

SHOE BASE POLE

SHOE BASE POLE					
Luminaire Mounting Height (Nominal) (ft)	Base Diameter (in)	Top Diameter (in)	Length (ft)	Pole Thickness (in)	Design Moment (K-ft)
20.00	7.00	4.90	15.00	0.1196	7.1
30.00	7.50	4.00	25.00	0.1196	13.2
31.00-39.00	8.00	4.36-3.24	26.00-34.00	0.1196	20.7
40.00	8.50	3.60	35.00	0.1196	20.7
50.00	10.50	4.20	45.00	0.1196	30.3

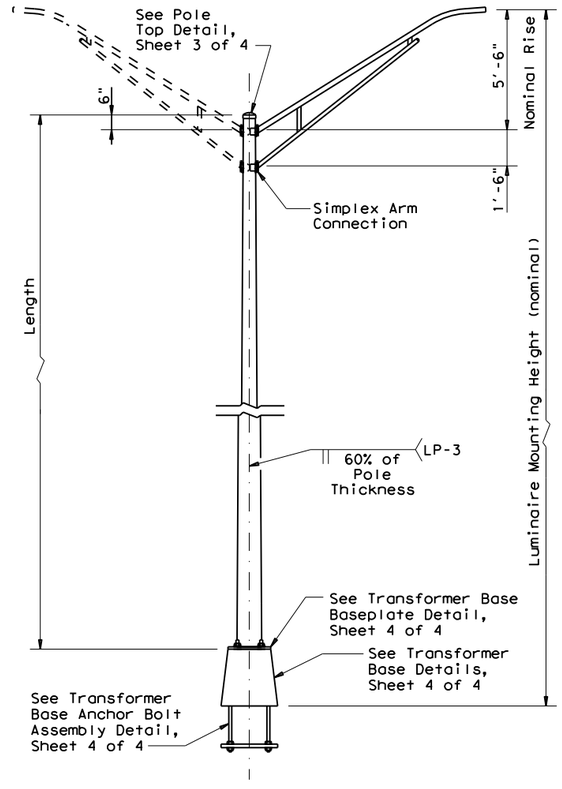

TRANSFORMER BASE POLE

TRANSFORMER BASE POLE					
Luminaire Mounting Height (Nominal) (ft)	Base Diameter (in)	Top Diameter (in)	Length (ft)	Pole Thickness (in)	Design Moment (K-ft)
20.00	7.00	5.11	13.50	0.1196	7.1
30.00	7.50	4.21	23.50	0.1196	13.2
31.00-39.00	8.00	4.57-3.45	24.50-32.50	0.1196	20.7
40.00	8.50	3.81	33.50	0.1196	20.7
50.00	10.00	3.41	43.50	0.1196	30.3

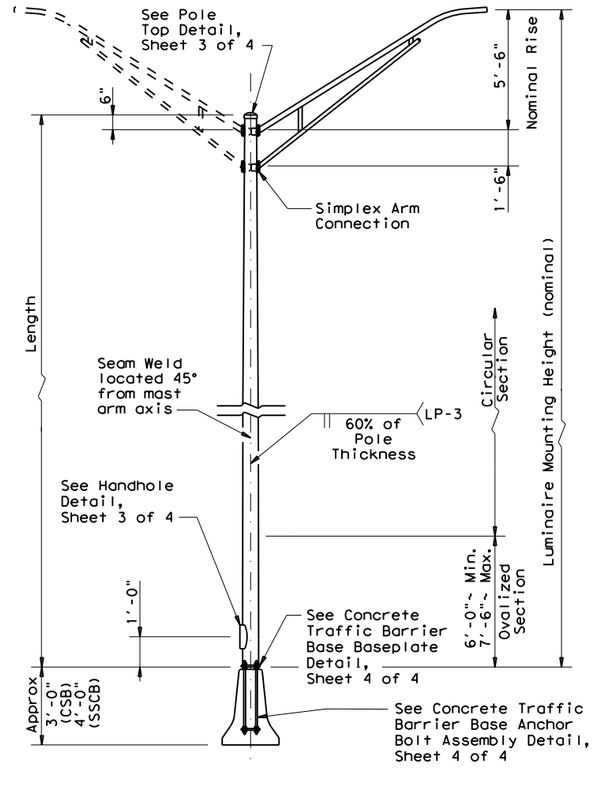

CONCRETE TRAFFIC BARRIER BASE POLE

CONCRETE TRAFFIC BARRIER BASE POLE (CSB/SSCB)						
Luminaire Mounting Height (Nominal) (ft)	Base ② Diameter (in)	Top Diameter (in)	Length (ft)	Pole Thickness (in)	Design Moment (K-ft)	
					About ℄ of Rail	Perp. to Rail
28.00	9.00	5.78	23.00	0.1196	10.3	13.2
38.00	9.00	4.38	33.00	0.1196	16.6	20.8
48.00	10.50	4.48	43.00	0.1345	25.1	30.5

MATERIAL DATA		
COMPONENT	ASTM DESIGNATION	MIN. YIELD (ksi)
Pole Shaft (0.14"/ft. Taper)	A572 Gr 50, A595 Gr A, A1011 HSLAS Gr 50 Cl 2 ③, or A1008 HSLAS Gr 50 Cl 2	50
Base Plate and Handhole Frame	A572 Gr.50, or A36	36
T-Base Connecting Bolts	A325 ①	92
Anchor Bolts	F1554 Gr 55, A193-B7 or A321	55 105
Anchor Bolt Templates	A36	36
Heavy Hex (H.H.) Nuts	A194 Gr 2H, or A563 Gr DH	
Flat Washers	F436	

NOTES:

① Lubricate in the field if necessary instead of the requirements in ASTM A325.

② Before ovalized as shown on Concrete Traffic Barrier Base Baseplate details, Sheet 4 of 4.

③ A1011 SS Gr 50 may be used instead of HSLAS, provided the material meets the elongation requirements for HSLAS.

POLE ASSEMBLY FABRICATION TOLERANCES TABLE

DIMENSION	TOLERANCE
Shaft length	+1"
I.D. of outside piece of slip fitting pieces	+1/8", -1/16"
O.D. of inside piece of slip fitting pieces	+1/32", -1/8"
Shaft diameter: other	+3/16"
Out of "round"	1/4"
Straightness of shaft	±1/4" in 10 ft
Twist in shaft	4° in 50 ft
Perpendicular to baseplate	1/8" in 24"
Pole centered on baseplate	±1/4"
Location of Attachments	±1/4"
Bolt hole spacing	±1/16"

GENERAL NOTES:

1. Designs conform to 2001 AASHTO Standard Specifications for Structural Supports for Highway Signs, Luminaires, and Traffic Signals and Interim Specifications. Design 3-Second Gust Wind Speed equal 110 mph with a 1.14 gust factor. A wind importance factor of 0.80 is applied to adjust the wind speed to a 25 year recurrence interval. Design moments listed in tables assume base of pole is less than 25' above natural ground level.
2. Design structures to support two 12' luminaire mast arms and luminaires. Design mast arms for a 60-pound luminaire having an effective projected area of 1.6 square feet.
3. Fabrication shall be in accordance with the Specifications and with the details, dimensions, and weld procedures shown herein. Do not submit shop drawings for roadway illumination pole assemblies fabricated in accordance with the details, dimensions, and weld procedures shown herein. Weld references call for preapproved weld procedures which the Fabricator must obtain prior to fabrication. Materials, fabrication tolerances, and shipping practices shall meet the requirements of these sheets and the Specifications. In the absence of specified fabrication tolerances, dimensions shall be within the tolerances generally obtainable in normal fabrication practice.
4. For mounting heights between values shown in the tables, use base diameter and thickness values for the larger pole.
5. Unless otherwise noted, all steel parts shall be galvanized in accordance with Item 445, "Galvanizing."
6. Steel poles shall be fabricated in accordance with Item 441, "Steel Structures." Longitudinal seam welds for pole sections shall have 60% minimum penetration. All welding shall be in accordance with the ANSI/AWS Structural Welding Code D1.1.
7. Two-section poles joined by circumferential welds will not be permitted, unless otherwise shown on the plans. Poles may be fabricated in two sections and field-assembled by the lap-joint method. The two sections shall telescope together with a lap length of not less than 1-1/2 times the shaft diameter at the lap joint.
8. Alternate material equal to or better than material specified may be substituted with the approval of the Engineer.
9. Lubricate and tighten anchor bolts, when erecting shoe base poles and concrete traffic barrier base poles, in accordance with Item 449, "Anchor Bolts."
10. All poles, except Transformer Base Poles, shall have hand holes with reinforcing frames and covers. Except for poles mounted on a concrete traffic barrier or bridge bracket, hand holes shall be placed 90 degrees to mast arm unless otherwise noted on the plans. For poles mounted on a concrete traffic barrier with one luminaire arm, hand holes shall be located 180 degrees from luminaire arm. For poles mounted on a concrete traffic barrier with two luminaire arms, all hand holes shall be on the same side of the barrier. For poles mounted on a bridge bracket, hand hole shall be on traffic side of the pole, at a height that will clear the barrier.
11. The finished pole shall have a smooth, uniform finish free of pits, blisters, or other defects. Scratched, chipped, and other damaged galvanized areas on poles and mast arms shall be repaired in accordance with Item 445, "Galvanizing."
12. Pole length is based on a 5'-6" luminaire arm rise. 4 ft. luminaire arms have a 2'-6" rise. A pole with 4 ft. luminaire arms will have an actual mounting height 3'-0" less than the nominal mounting height. Increasing the pole length to meet the nominal mounting height is allowed, but unnecessary unless otherwise directed by the engineer.

Texas Department of Transportation

Traffic Operations Division Standard

ROADWAY ILLUMINATION POLES

RIP(2)-17

FILE: rip-17.dgn	DN:	CK:	DW:	CK:
©TxDOT January 2007	CONT	SECT	JOB	HIGHWAY
REVISIONS 7-17	DIST	COUNTY		SHEET NO.

73B

DISCLAIMER:
The use of this standard is governed by the "Texas Engineering Practice Act". No warranty of any kind is made by TxDOT for any purpose whatsoever. TxDOT assumes no responsibility for the conversion of this standard to other formats or for incorrect results or damages resulting from its use.

DATE:
FILE:

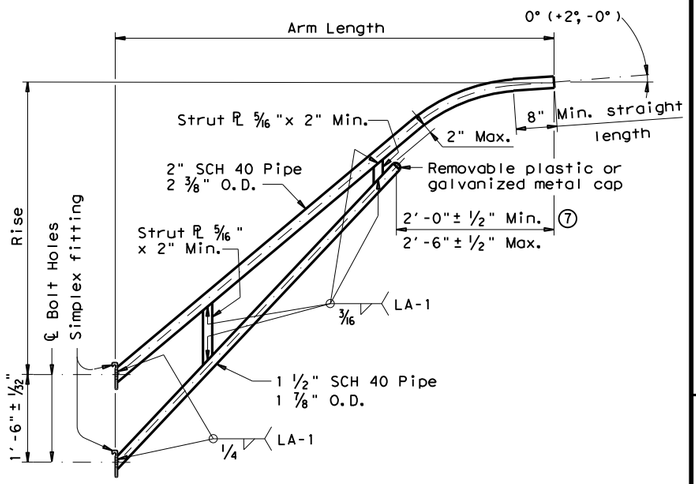

LUMINAIRE ARM

LUMINAIRE ARM DIMENSIONS		
Nominal Arm Length	Arm Length	Rise
4'-0"	3'-6"	2'-6" ⑩
6'-0"	5'-6"	5'-6"
8'-0"	7'-6"	5'-6"
10'-0"	9'-6"	5'-6"
12'-0"	11'-6"	5'-6"

ARM ASSEMBLY FABRICATION TOLERANCES TABLE	
DIMENSION	TOLERANCE
Arm Length	±3"
Arm Rise	+1 3/4" in 10 ft
Arm Diameter	+3/16"
Overall length or width	+1/4"
Thickness	+1/4", -1/16"
Deviation from flat	1/8" in 12"
Spacing between holes	+3/32"
Bolt hole size	±1/16"
Strut location in truss arms	±1 1/2"

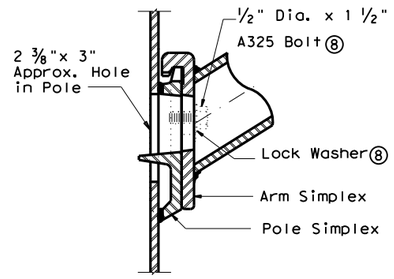

UPPER SIMPLEX FITTING
(Gusset not shown for clarity)

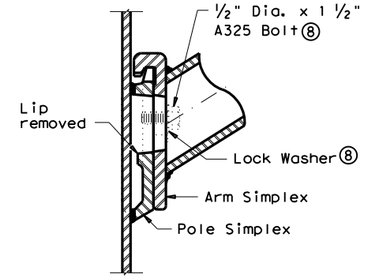

LOWER SIMPLEX FITTING
(Gusset not shown for clarity)

SECTION B-B

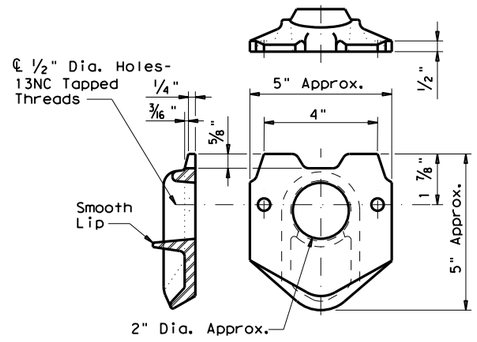

POLE SIMPLEX DETAIL ⑨

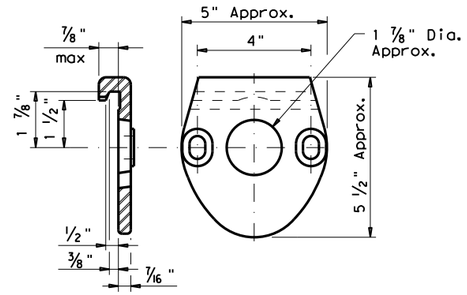

ARM SIMPLEX DETAIL ⑨

NOTES:

④ Any of the materials listed for plates may be used where the drawings do not specify a particular ASTM designation.

⑤ A576 must be suitable for forging and also meet minimum tensile strength of 65 ksi, minimum yield of 35 ksi, and elongation in 2 inches of 22 percent.

⑥ A572, A1008 HSLAS-F, and A1011 HSLAS-F materials may have higher yield strengths but shall not have less elongation than the grade indicated.

⑦ Dimensional limits are given to show acceptable variation in design. All of a Fabricator's production of a particular arm length shall have the same dimensions within specified tolerances.

⑧ Each pole simplex fitting shall be supplied with 2 bolts and 2 lock washers of the size specified. The bolts and lock washers shall be secured to the pole with the other hardware items called for in the plans.

⑨ Proposed deviations in arm simplex dimensions or materials must be submitted to the Department for approval.

⑩ Luminaire mounting heights are based on assumed 5'-6" luminaire arm rise.

MATERIALS	
Pole or Arm Simplex	ASTM A27 Gr 65-35, A148 Gr 80-50, A576 Gr 1021 ⑤, or A36 (Arm only)
Arm Pipes	ASTM A53 Gr A or B, A500 Gr B, A501, A 1008 HSLAS-F Gr 50 ⑥, or A1011 HSLAS-F Gr 50 ⑥
Arm Struts and Gusset Plates ④	ASTM A36, A572 Gr 50 ⑥, or A588
Misc.	ASTM designations as noted

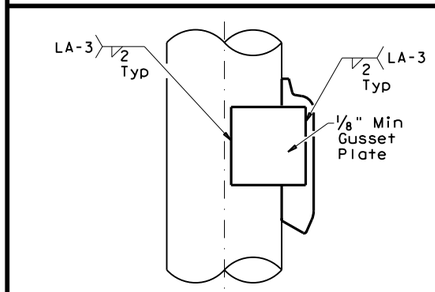

SIDE

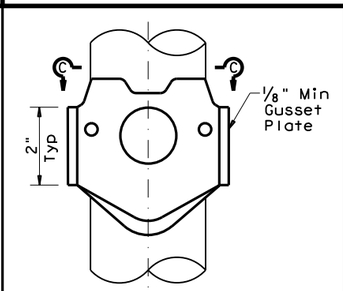

ELEVATION

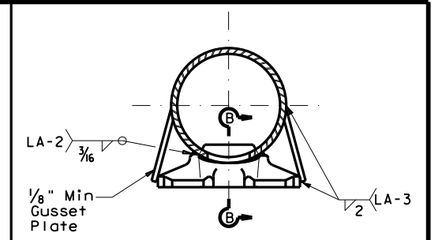

SECTION C-C

SIMPLEX ATTACHMENT DETAIL

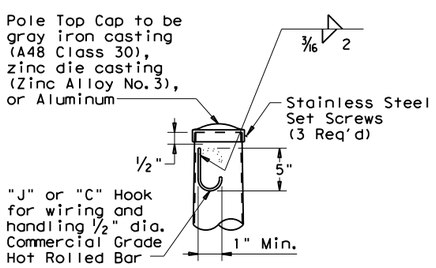

POLE TOP

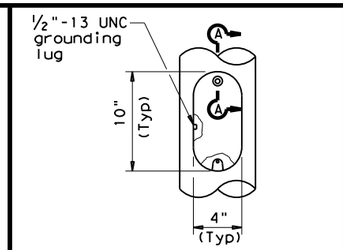

ELEVATION

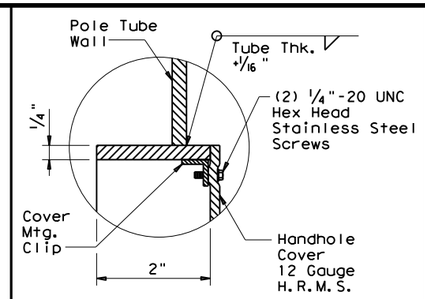

SECTION A-A

HANDHOLE

Texas Department of Transportation

Traffic Operations Division Standard

ROADWAY ILLUMINATION POLES

RIP(3)-17

FILE: rip-17.dgn	DN:	CK:	DW:	CK:
©TxDOT January 2007	CONT	SECT	JOB	HIGHWAY
REVISIONS				
7-17	DIST	COUNTY		SHEET NO.

73C

DISCLAIMER:
The use of this standard is governed by the "Texas Engineering Practice Act". No warranty of any kind is made by TxDOT for any purpose whatsoever. TxDOT assumes no responsibility for the conversion of this standard to other formats or for incorrect results or damages resulting from its use.

DATE:
FILE:

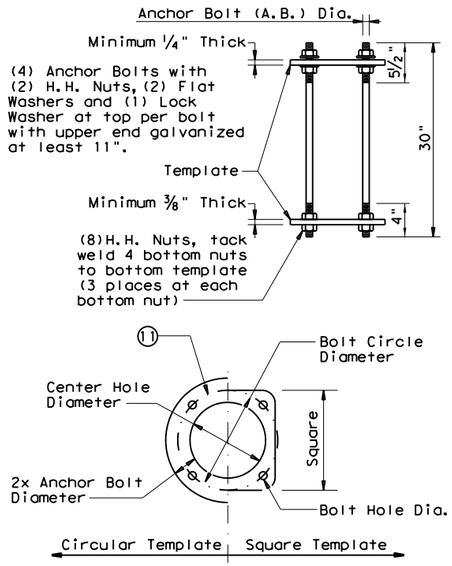

SHOE BASE ANCHOR BOLT ASSEMBLY

SHOE BASE ANCHOR BOLT ASSEMBLY TABLE					
MOUNTING HEIGHTS (nominal)	A.B. Dia.	BOLT CIRCLE DIAMETER	SQUARE	CTR. HOLE DIAMETER	BOLT HOLE DIAMETER
20'-39'	1"	13"	13"	11"	1 1/16"
40'-50'	1 1/4"	15"	14 1/2"	12 1/2"	1 5/16"

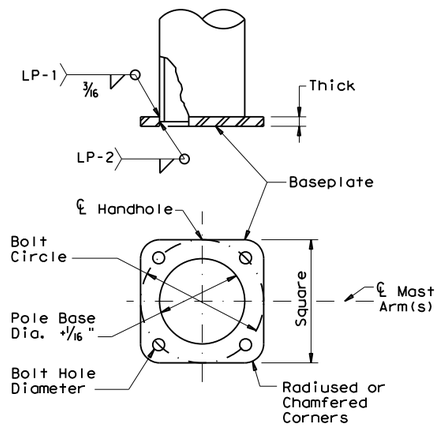

SHOE BASE BASEPLATE

SHOE BASE BASEPLATE TABLE				
MOUNTING HEIGHTS (nominal)	BOLT CIRCLE	SQUARE	THICK	BOLT HOLE DIAMETER
20'- 39'	13"	13"	1 1/4"	1 1/4"
40'	15"	15"	1 1/4"	1 1/2"
50'	15"	15"	1 1/2"	1 1/2"

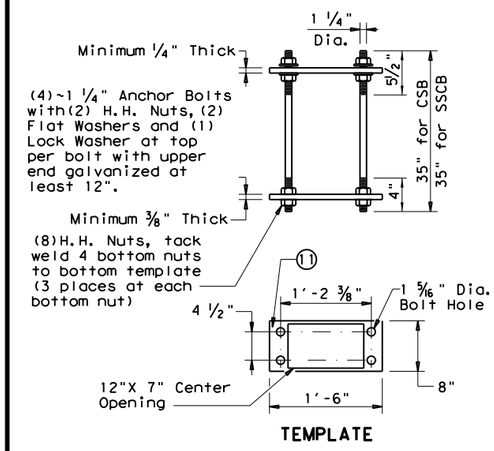

CONCRETE TRAFFIC BARRIER BASE ANCHOR BOLT ASSEMBLY

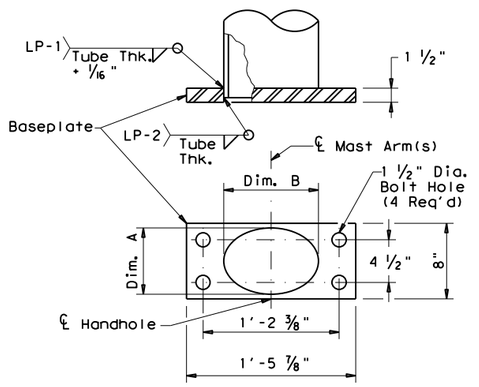

CONCRETE TRAFFIC BARRIER BASE BASEPLATE

CONCRETE TRAFFIC BARRIER BASE BASEPLATE TABLE			
MOUNTING HEIGHTS (nominal)	POLE DIA.(12)	DIM. A	DIM. B
28'- 38'	9"	7" ± 1/4"	10" ± 1/4"
48'	10 1/2"	7" ± 1/4"	13" ± 1/4"

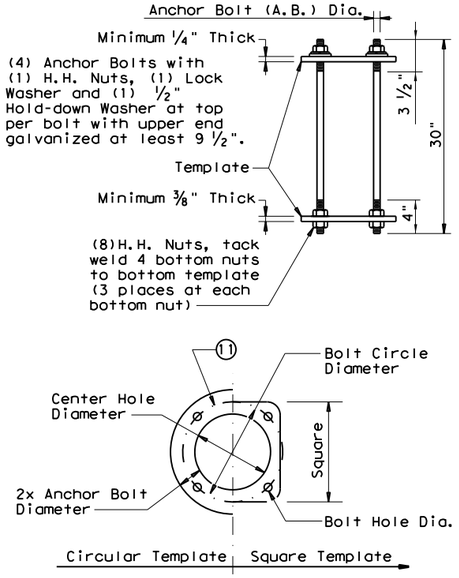

TRANSFORMER BASE ANCHOR BOLT ASSEMBLY

TRANSFORMER BASE ANCHOR BOLT ASSEMBLY TABLE					
MOUNTING HEIGHTS (nominal)	A.B. Dia.	BOLT CIRCLE DIAMETER	SQUARE	CTR. HOLE DIAMETER	BOLT HOLE DIAMETER
20'- 39'	1"	14"	14"	12"	1 1/16"
40'- 50'	1 1/4"	17 1/4"	16 3/4"	14 3/4"	1 5/16"

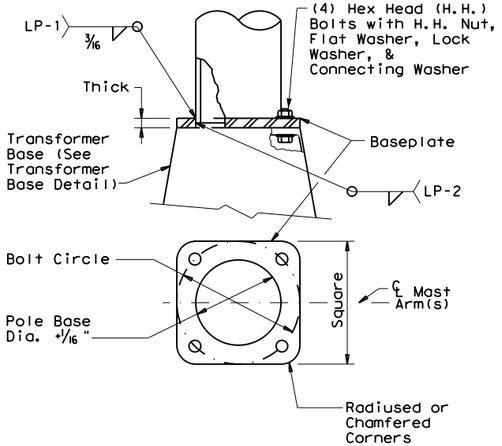

TRANSFORMER BASE BASEPLATE

TRANSFORMER BASE BASEPLATE TABLE						
MOUNTING HEIGHTS (nominal)	BOLT CIRCLE	SQUARE	THICK	CONNECTING BOLT DIA.	BOLT HOLE DIAMETER	TRANSFOMER BASE TYPE
20'- 39'	13"	13"	1 1/4"	1"	1 1/4"	A
40'	15"	15"	1 1/4"	1 1/4"	1 1/2"	B
50'	15"	15"	1 1/2"	1 1/4"	1 1/2"	B

TRANSFORMER BASE TABLE		
TYPE	TOP B.C.	BTM. B.C.
A	13"	14"
B	15"	17 1/4"

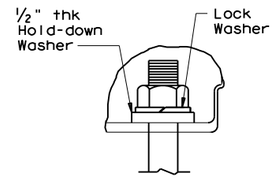

DETAIL A

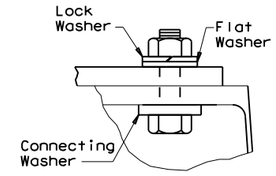

DETAIL B

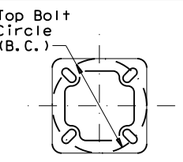

TOP PLAN

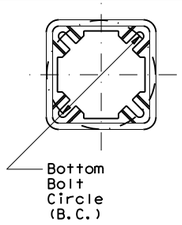

BOTTOM PLAN

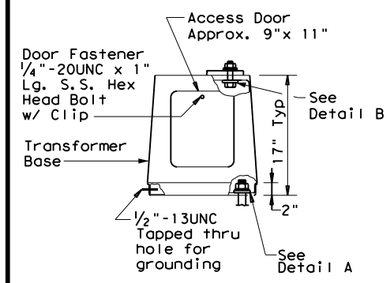

ELEVATION

TRANSFORMER BASE DETAILS

GENERAL NOTES:

1. For mounting heights between those shown in the table, use the values in he table for the larger mounting height.
2. All breakaway bases shall meet the breakaway requirements of the 2001 Edition of the AASHTO "Standard Specifications for Structural Supports for Highway Signs, Luminaires and Traffic Signals," and shall have been tested by FHWA-approved methods. All bases shall have been structurally tested to resist 150% of the design moment.
3. Transformer bases shall be cast from aluminum, ASTM B108 or B26 Alloy 356.0-T6, or other material approved by the Engineer. Four Hex Head (H.H.) bolts with four H.H. nuts, four lock washers, four flat washers, and connecting and hold-down washers as recommended by the manufacturer, galvanized to ASTM A153 Class C or D, or B695 Class 50, shall be provided with each transformer base for connecting the pole. Bolts shall be ASTM A325 or approved equal. Nuts shall be ASTM A563 grade DH galvanized.
4. Bases shall be stamped, incised or by other approved permanent means, marked to show fabricator's name or logo, and model number. Such information shall be placed in a readily seen location, inside or outside the base, but shall not be placed on the door.
5. Doors for transformer bases shall be made of plastic, fiberglass or other non-metallic material approved by the Engineer and shall be attached with stainless steel screws or bolts. Transformer bases shall be cleaned by grit blast cleaning after heat treatment. Certification by the manufacturer of heat treatment shall be furnished with transformer bases. The certification shall show the metal alloy and temper and that the base meets those requirements, chemical and physical. The certification shall also show the material ASTM specification. Transformer bases shall be cast with a removable tab bar for material testing. Some bars may have been removed by the manufacturer for testing.

NOTES:

(11) Anchor Bolt Templates do not need to be galvanized.

(12) Pole diameter before ovalized.

ANCHOR BOLT FABRICATION TOLERANCES TABLE	
DIMENSION	TOLERANCE
Length	± 1/2"
Threaded length	± 1/2"
Galvanized length (if required)	- 1/4"

SHEET 4 OF 4

Texas Department of Transportation

Traffic Operations Division Standard

ROADWAY ILLUMINATION POLES

RIP(4)-17

FILE: rip-17.dgn	DN:	CK:	DW:	CK:
©TxDOT January 2007	CONT	SECT	JOB	HIGHWAY
REVISIONS 7-17	DIST	COUNTY		SHEET NO.

73D

DISCLAIMER:
The use of this standard is governed by the "Texas Engineering Practice Act". No warranty of any kind is made by TxDOT for any purpose whatsoever. TxDOT assumes no responsibility for the conversion of this standard to other formats or for incorrect results or damages resulting from its use.

DATE:
FILE:

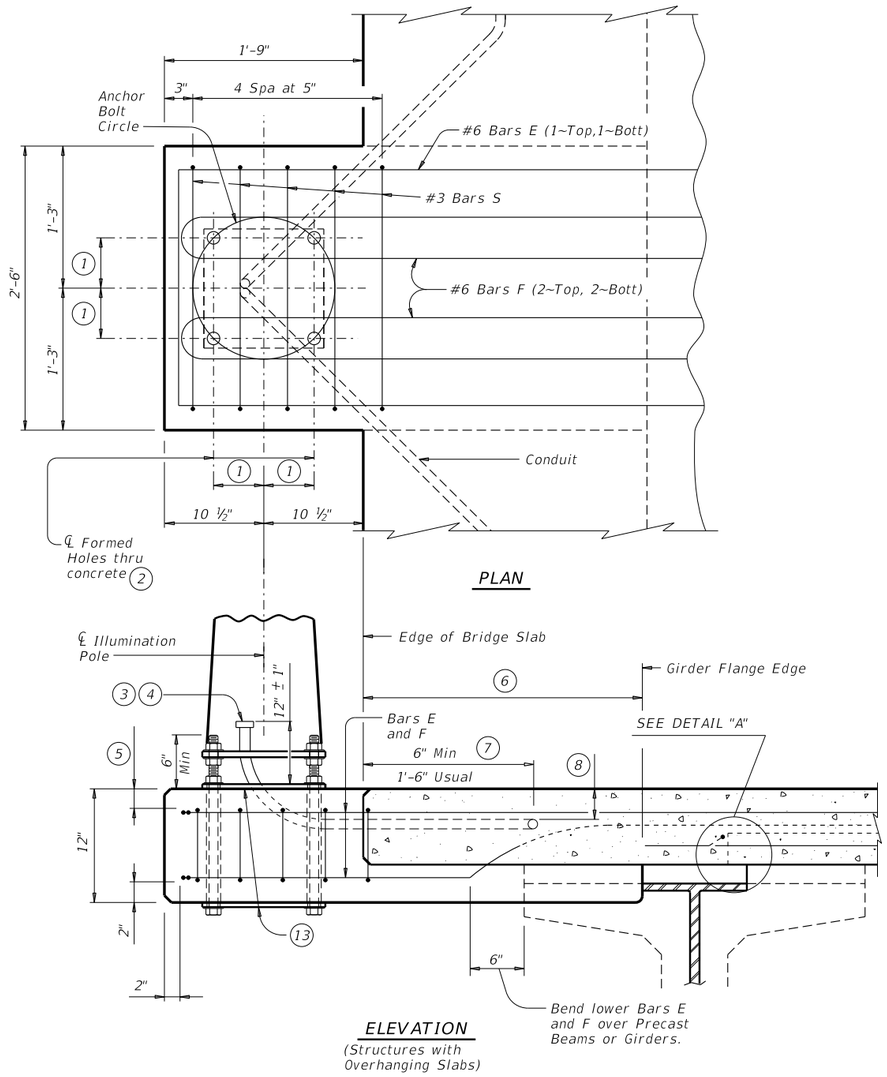

ILLUMINATION POLE BRACKET LOCATION AND REINFORCING

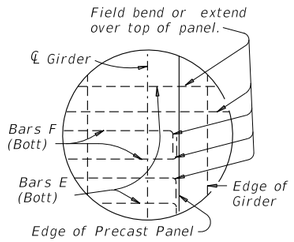

DETAIL "A"

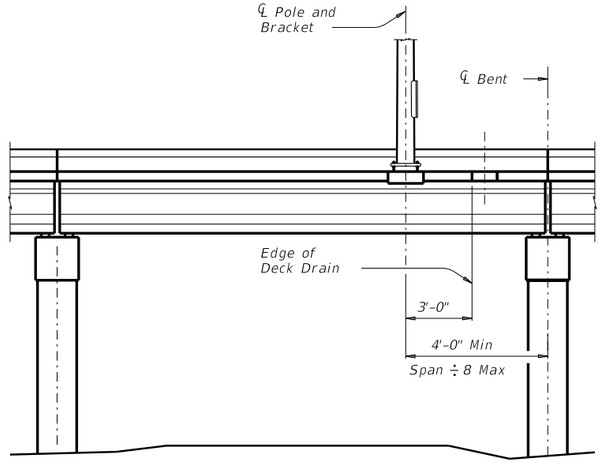

TYPICAL BRIDGE ELEVATION

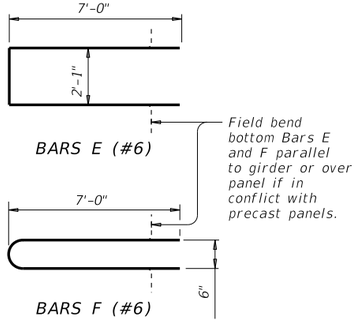

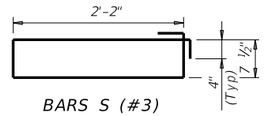

ESTIMATED QUANTITIES~ONE BRACKET			
ITEM		UNIT	QUANT
CONCRETE	9 10	CY	0.2
REINFORCING STEEL	10	LB	146
STRUCTURAL STEEL	10 11	LB	104
CONDUIT	12	LF	4

1. See table for dimension.
2. See table for hole size.
3. If lighting is to be placed on future contract, extend conduit only 6" and provide water tight cap.
4. Ream burrs and install bell ends or bushings on all conduit ends.
5. Provide same clear cover required for bridge slab. Place beneath top slab reinforcing only if necessary to provide this cover.
6. If slab edge to girder flange edge exceeds 3'-11", lengthen Bars E and F proportionally to ensure Bars E and F extend 1'-6" Min beyond girder flange edge.
7. Clear rail anchors, drains, etc 1 ½" Min.
8. 1 ½" Min cover but always beneath top layer slab reinforcing.
9. Variation due to slab thickness is insignificant.
10. For Contractor's information only.
11. Anchor Bolts, Nuts, Washers, and 2 plates.
12. Additional to main run (Size and type as shown elsewhere on the plans).
13. See table for anchor bolt and steel plate information.

GENERAL NOTES:

Designed for up to 50 Ft light pole with one 12 Ft arm, 60 Lb luminaire with 1.6 sq ft EPA at maximum design wind speed of 110 mph (3 second gusts). A special design is required if luminaire mounting height exceeds 100 ft above average surrounding terrain.

Concrete for Illumination Pole Brackets must be of the same type and placed monolithically with the bridge slab. The bracket quantity is considered subsidiary to the Item "Reinforced Concrete Slab".

The anchor bolts, nuts, washers, and plates are subsidiary to the Item "Roadway Illumination Assemblies".

The type and size of conduit, the anchor bolt circle diameter, and the number and location of brackets is shown elsewhere on the plans. Brackets found to conflict with other components of the bridge may be relocated as necessary.

Provide Grade 60 reinforcing steel.

Cover dimensions are clear dimensions, unless noted otherwise.

Reinforcing bar dimensions shown are out-to-out of bar.

TABLE OF ANCHOR BOLT AND STEEL PLATE INFORMATION						
ANCHOR BOLT CIRCLE DIAMETER	ANCHOR BOLT OFFSET	ANCHOR BOLT DIAMETER	ANCHOR BOLT HOLE SIZE		TOP AND BOTTOM STEEL PLATE SIZE	CENTER HOLE DIAMETER IN TOP STEEL PLATE
			CONCRETE	STEEL		
IN	IN	IN	IN	IN	IN	IN
13	4 5/8	1	1 ¼	1 ¼	PL ½ X 13 X 1'-1"	9 ½
15	5 5/16	1 ¼	1 ½	1 ½	PL ½ X 15 ½ X 1'-3 ½	10 ½

Texas Department of Transportation

Bridge Division Standard

BRIDGE LIGHTING DETAILS

BL

FILE: blstde01.dgn	DN: TxDOT	CK: TxDOT	DW: TxDOT	CK: TxDOT
©TxDOT January 2015	CONT	SECT	JOB	HIGHWAY
REVISIONS	DIST	COUNTY		SHEET NO.

DISCLAIMER:
The use of this standard is governed by the "Texas Engineering Practice Act". No warranty of any kind is made by TxDOT for any purpose whatsoever. TxDOT assumes no responsibility for the conversion of this standard to other formats or for incorrect results or damages resulting from its use.

DATE:
FILE:

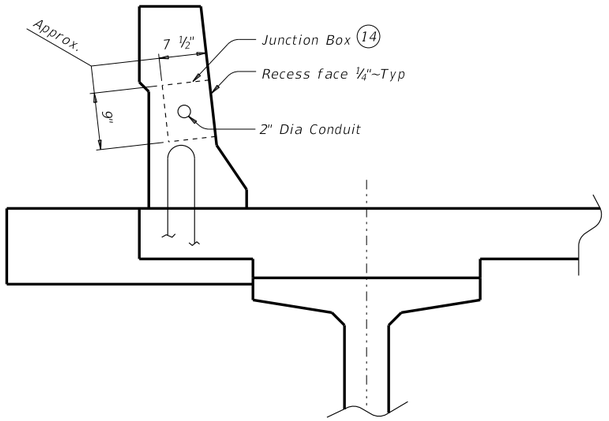

SHOWING T551, T552, AND T80HT

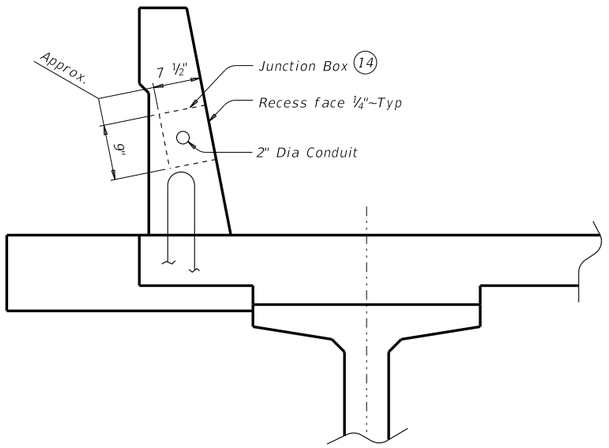

SHOWING SSTR AND T80SS

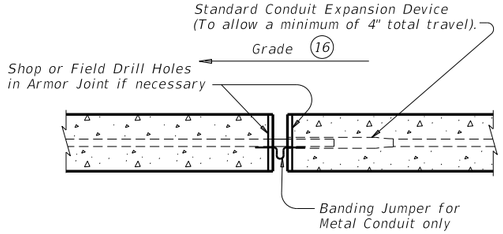

CONDUIT EXPANSION JOINT

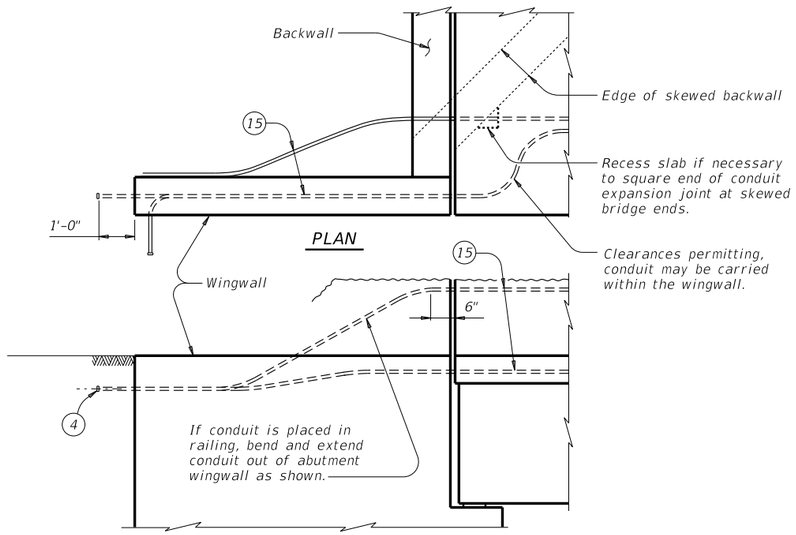

ELEVATION

TREATMENT AT END OF BRIDGE

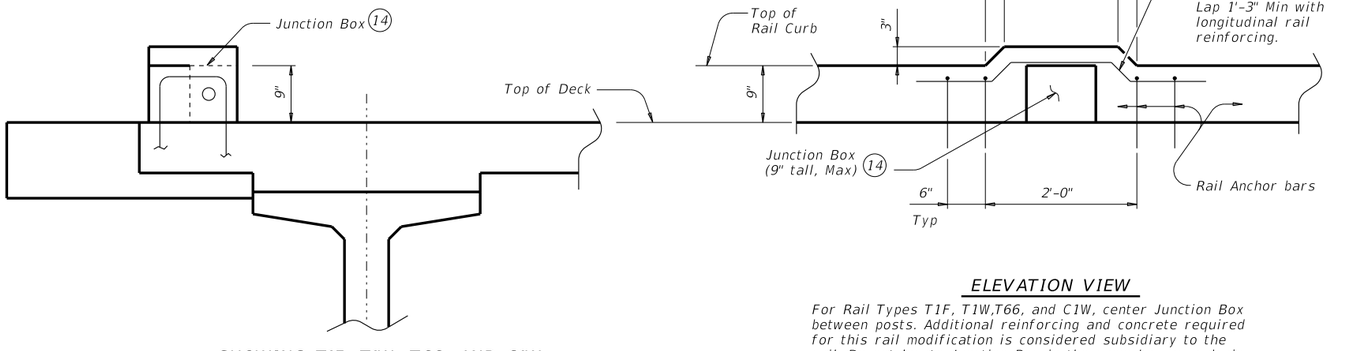

SHOWING T1F, T1W, T66, AND C1W

See Elevation View for curb modifications

ELEVATION VIEW

For Rail Types T1F, T1W,T66, and C1W, center Junction Box between posts. Additional reinforcing and concrete required for this rail modification is considered subsidiary to the rail. Do not locate Junction Box in the same bay as a drain slot in rail curb.

JUNCTION BOX LOCATION

Use these details as a guide in locating junction boxes in rail types not shown.

(4) Ream burrs and install bell ends or bushings on all conduit ends.

(14) Provide polymer concrete junction boxes meeting the requirements of DMS 11030.

(15) Position of conduit shown elsewhere on the plans or as directed by the Engineer.

(16) Place Conduit Expansion Device on high side of expansion joint.

Texas Department of Transportation

Bridge Division Standard

BRIDGE LIGHTING DETAILS

BL

FILE: blstde01.dgn	DN: TxDOT	CK: TxDOT	DW: TxDOT	CK: TxDOT
©TxDOT January 2015	CONT	SECT	JOB	HIGHWAY
REVISIONS				
	DIST	COUNTY		SHEET NO.

DISCLAIMER:
The use of this standard is governed by the "Texas Engineering Practice Act". No warranty of any kind is made by TxDOT for any purpose whatsoever. TxDOT assumes no responsibility for the conversion of this standard to other formats or for incorrect results or damages resulting from its use.

DATE:
FILE:

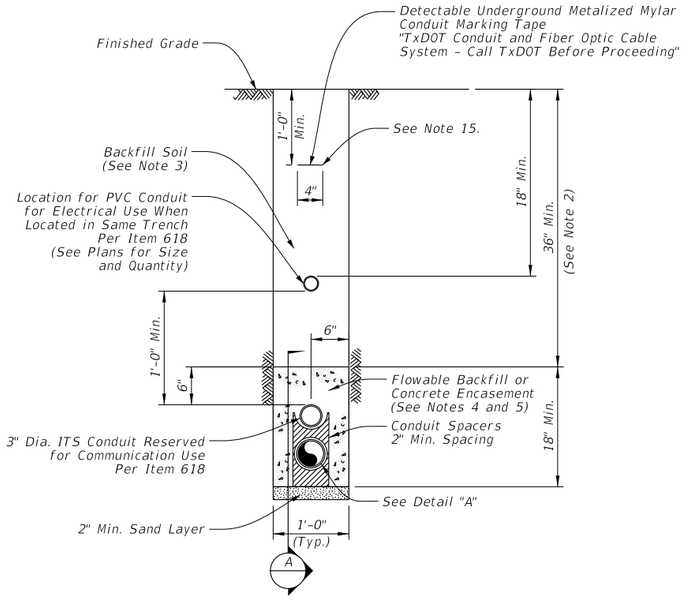

ITS Conduit Backbone Trench Vertical Spacing

Two Conduit System

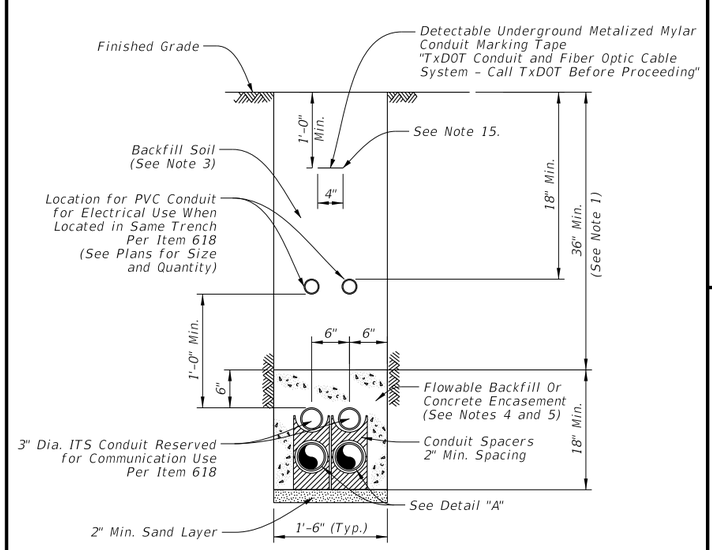

ITS Conduit Backbone Trench Vertical Spacing

Four Conduit System

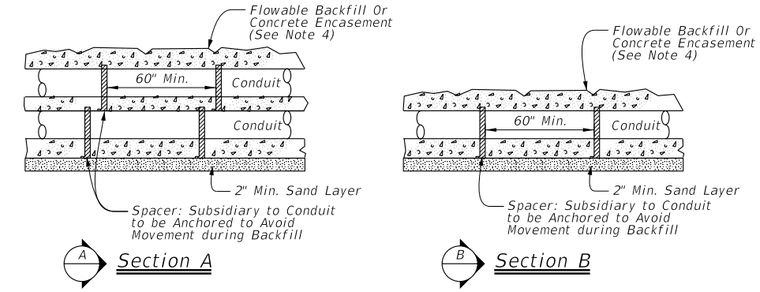

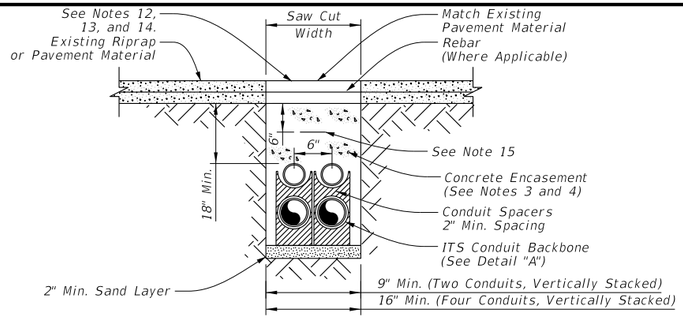

Open Cut Trenching Details

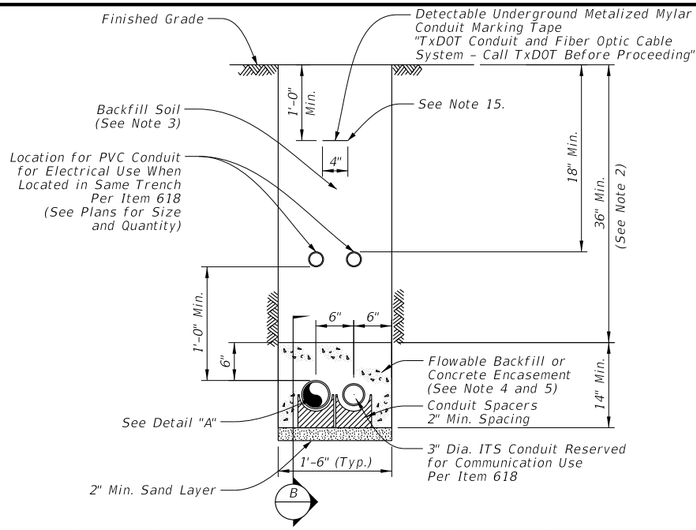

ITS Conduit Backbone Trench Horizontal Spacing (Alternative)

Two Conduit System

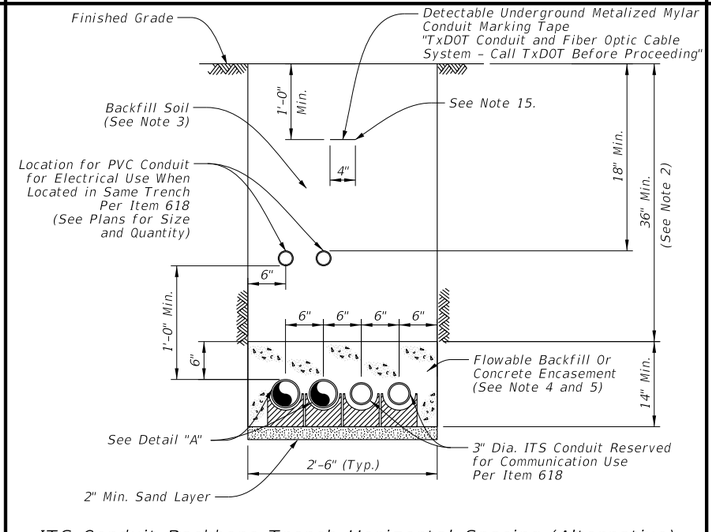

ITS Conduit Backbone Trench Horizontal Spacing (Alternative)

Four Conduit System

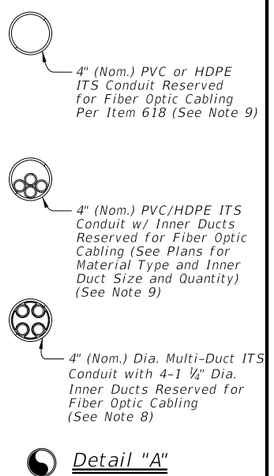

Detail "A"

Conduit Types
(See Plans for Type and Quantity)

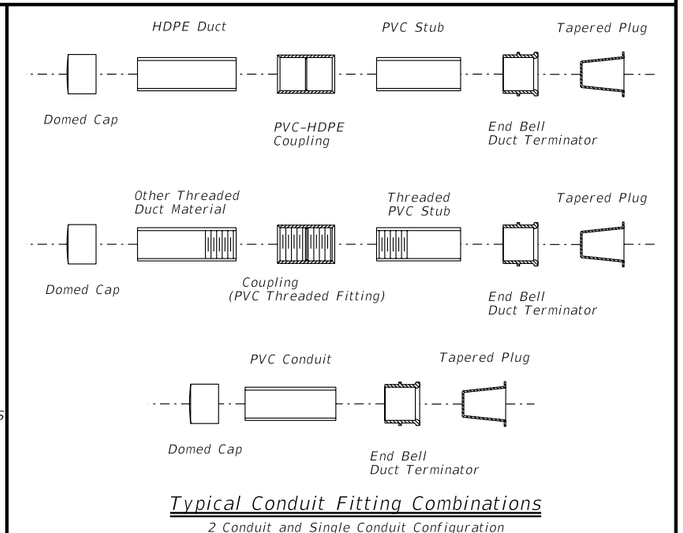

Typical Conduit Fitting Combinations

2 Conduit and Single Conduit Configuration

SHEET 1 OF 2

General Notes:

1. Construct the ITS conduit backbone system by vertically spacing conduit, unless field constraints, obstructions, or utility conflicts require horizontal spacing of conduits. Both vertical and horizontal spacing configurations have been detailed for contractor information for construction.
2. Install ITS conduit backbone system a minimum of 42 inches from finished grade to the top of the conduit unless otherwise directed or to avoid conflicts or field conditions such as utilities or obstructions. Vary depth of the trench in order to pass over/under any existing utilities. Refer to ITS Conduit Obstruction Crossing Standard ITS(35) for further detail.
3. Perform trench excavation and backfilling in accordance with Item 400, "Excavation and Backfill for Structures."
4. When a trench depth greater than 24 inches can be achieved from the finished grade to the top of ITS conduit, encase the conduits with flowable backfill in accordance with Item 401, "Flowable Backfill." Use Class B concrete as a substitute in accordance with Item 421, "Hydraulic Cement Concrete" at the discretion of the Engineer.
5. When a trench depth of less than 24 inches is required due to field conditions, encase the conduits in Class B concrete in accordance with Item 421, "Hydraulic Cement Concrete."
6. Concrete encasement will be paid for under Special Specification "ITS Multi-Duct Conduit" or as shown on the plans.
7. Provide ITS PVC conduit identified for electrical and communication use in accordance with Item 618, "Conduit."
8. Provide ITS multi-duct conduit identified for fiber optic communication use in accordance with Special Specification "ITS Multi-Duct Conduit."
9. Conduit per Item 618, "Conduit" (See Plans for Material Type and Quantity).
10. Provide a single 1/C #14 insulated wire in conduit runs which have been identified in the plans to carry fiber optic cable. Provide UL listed solid copper wire with orange color low density polyethylene insulation suitable for conduit installation rated for temperature range -20 C to 60 C and a voltage rating of 600V. This wire will serve as a tracer, or locate, wire for locating underground conduit containing fiber optic cabling and will be paid for under Item 620, "Electrical Conductors."
11. Provide a flat pull cord in all empty conduits and innerducts. Provide a pull cord with a tensile strength of 1,250 Lbs. minimum and have foot markings to determine length installed. Pull cord and installation to be subsidiary to various bid items.
12. Remove saw cut width to accommodate conduit installation.
13. Replace rebar as necessary, lapped and tied a minimum of 3 inches to existing rebar.
14. Replace broken pavement materials with similar materials to exact shape, and thickness of existing.
15. Place marking tape a minimum of 1 foot – 0 inches below grade when no other electrical marking tape required, or 8 inches below electrical marking tape when provisioned under Item 618.
16. Provide a 1/C #8 insulated grounding conductor within one inner duct of a pre-assembled multi-duct when no other grounding conductor is provisioned for in the plans.

Sheet Details

Not to Scale

Texas Department of Transportation

Traffic Operations Division Standard

ITS CONDUIT TRENCH DETAILS

ITS(27)-16

FILE: its(27)-16.dgn	DN: TxDOT	CK: TxDOT	DW: TxDOT	CK: TxDOT
©TxDOT FEBRUARY 2016	CONT	SECT	JOB	HIGHWAY
REVISIONS				
	DIST	COUNTY		SHEET NO.

252

DISCLAIMER:
The use of this standard is governed by the "Texas Engineering Practice Act". No warranty of any kind is made by TxDOT for any purpose whatsoever. TxDOT assumes no responsibility for the conversion of this standard to other formats or for incorrect results or damages resulting from its use.

DATE:
FILE:

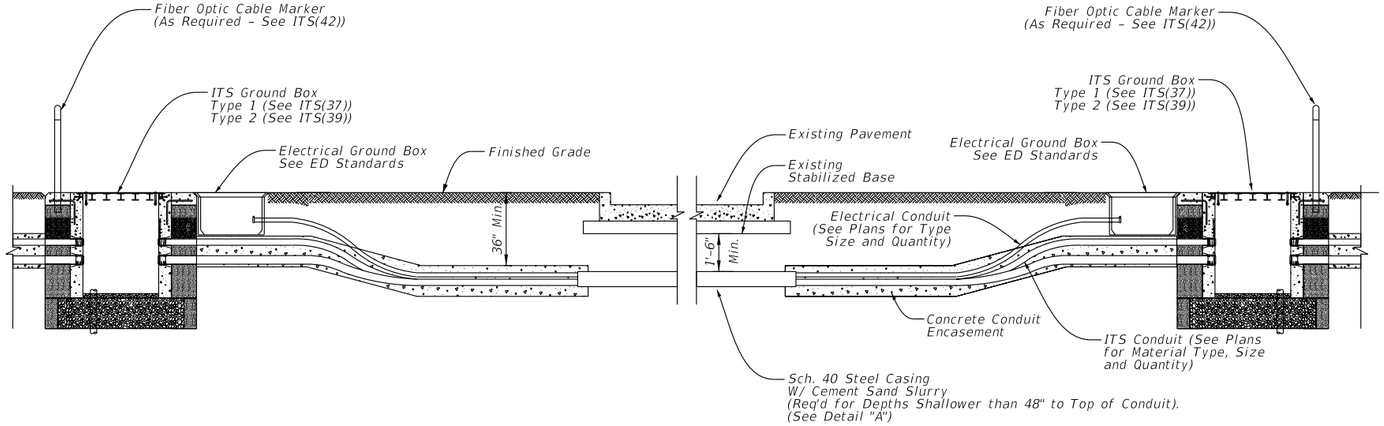

Typical Conduit Installation Jacking
or Boring Beneath Existing Roadway

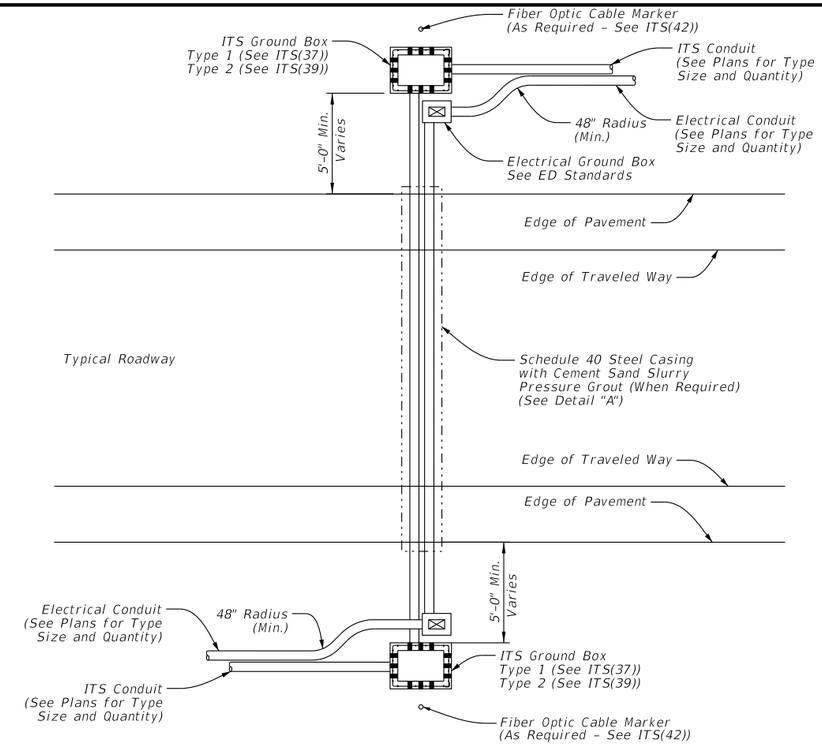

Bore Under Pavement

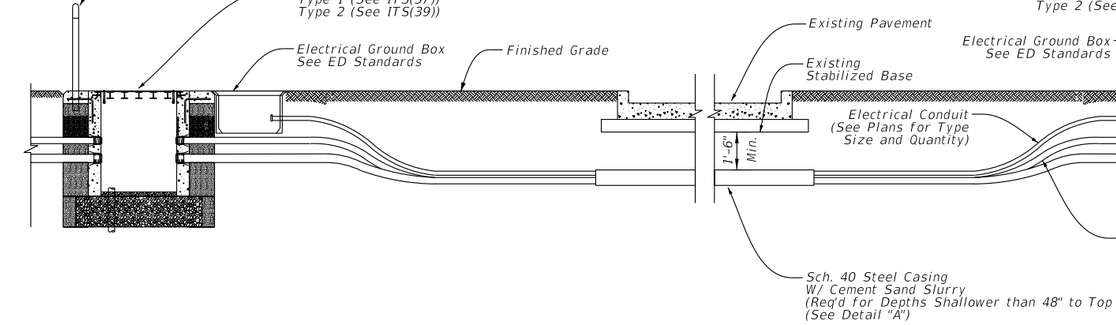

Typical Conduit Installation Jacking
or Boring Beneath Existing Roadway
(Where Concrete Encasement Not Required)

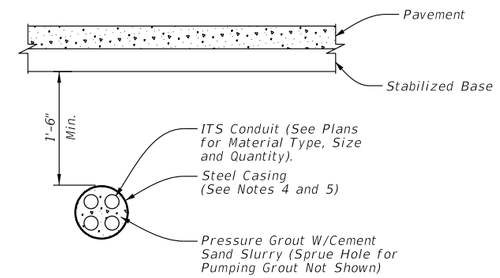

Steel Casing Detail "A"

General Notes:

1. Typical conduit installation details for jacking or boring beneath existing roadway is diagrammatic in nature. Roadway cross-slopes may vary for each crossing.
2. Jack or bore in accordance with Item 476, "Jacking, Boring, or Tunneling Pipe or Box" except for measurement and payment.
3. Furnishing and installation of pressure grouting will not be paid for directly but considered incidental to Special Specification "ITS Multi-Duct Conduit" or Item 618, "Conduit."
4. When boring under pavement shallower than 48 inches from finished grade to top of conduit, provide Schedule 40 steel casing under pavement to encase the conduit system. Provide steel casing of a size to accommodate ITS conduit and electrical conduit as shown in the plans. Provide a minimum 20 percent void space around all conduits. Steel casing will not be paid for directly but considered incidental to Special Specification, "ITS Multi-Duct Conduit" or Item 618, "Conduit."
5. When a depth greater than 48 inches can be achieved from finished grade to top of conduit, provide Schedule 80 PVC. No steel casing required unless otherwise directed.
6. Ensure all conduit bends are in conformance with the latest edition of the National Electrical Code.
7. Provide GPS coordinate points to the District for all ground boxes installed, and shifts or deviations of the conduit alignment from the plans required to avoid obstructions or utilities. Take GPS coordinate points at the start of the transition, at the point of curvature, and at the end of the transition at the point of tangency. Document the turnout radius and installed depth. Provide GPS coordinate points in NAD83 coordinate system and be accurate to 5 feet.

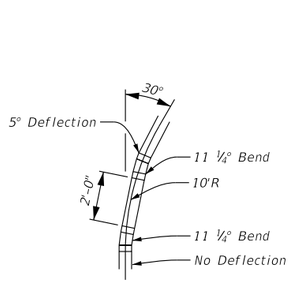

30° Turnout Detail

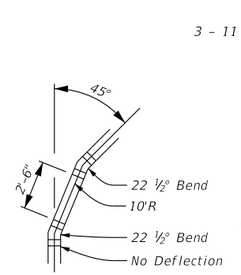

45° Turnout Detail

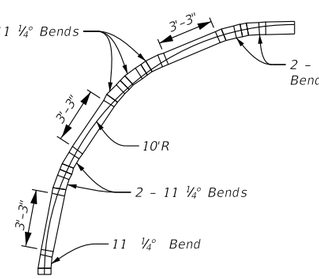

90° Turnout Detail

Provide this arrangement of conduit and fittings or approved equal at all 30°, 45°, and 90° bends, horizontal and vertical, to achieve a nominal 10' conduit radius for pre-assembled multi-duct conduit. See Note 7.

Sheet Details
Not to Scale

SHEET 2 OF 2

Texas Department of Transportation

Traffic Operations Division Standard

ITS CONDUIT BORE AND STEEL CASING DETAILS

ITS(28)-16

FILE: its(28)-16.dgn	DN: TxDOT	CK: TxDOT	DW: TxDOT	CK: TxDOT
©TxDOT FEBRUARY 2016	CONT	SECT	JOB	HIGHWAY
REVISIONS				
	DIST	COUNTY		SHEET NO.

DISCLAIMER:
The use of this standard is governed by the "Texas Engineering Practice Act". No warranty of any kind is made by TxDOT for any purpose whatsoever. TxDOT assumes no responsibility for the conversion of this standard to other formats or for incorrect results or damages resulting from its use.

DATE:
FILE:

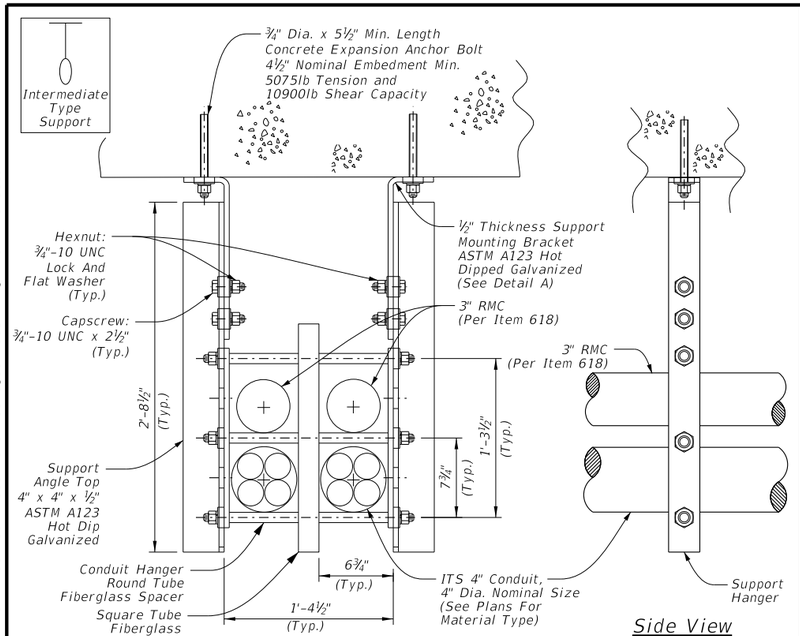

Underside ITS Conduit Hanger
(2x2 Conduit Configuration)

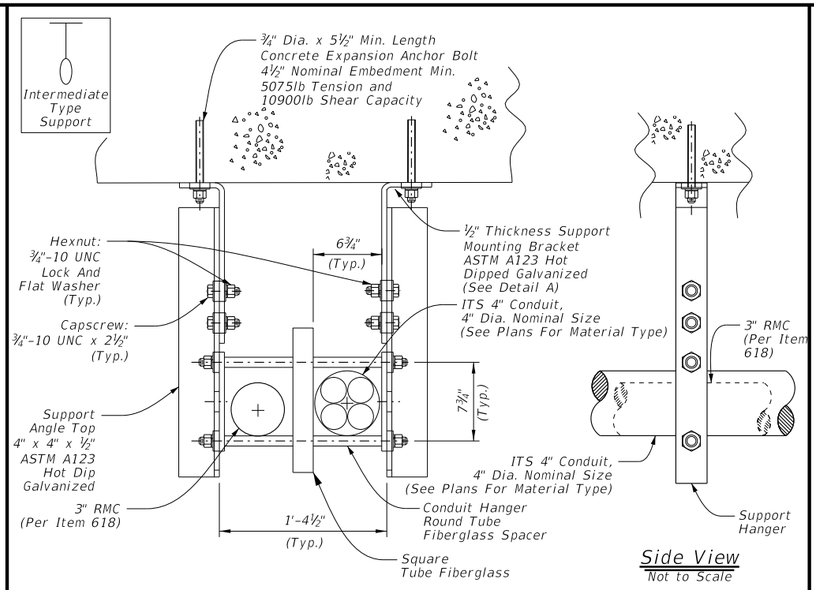

Underside ITS Conduit Hanger
(2x1 Conduit Configuration)

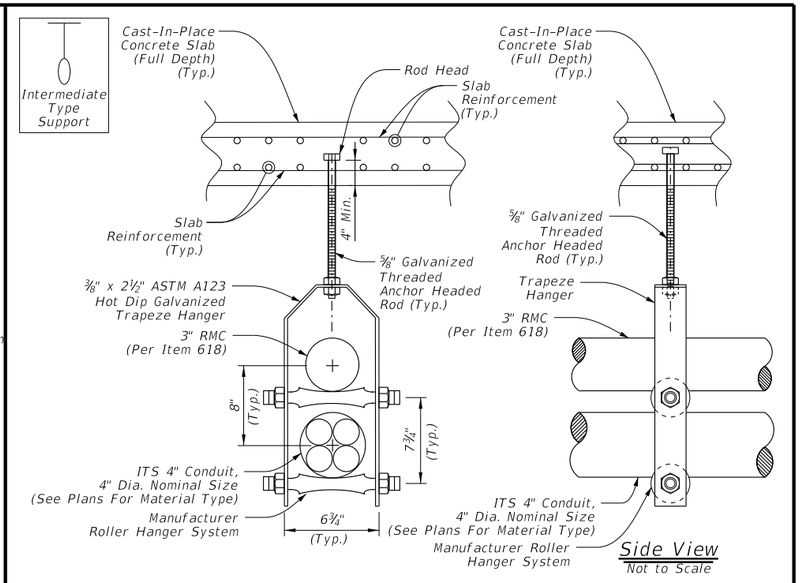

Underside ITS Conduit Roller Hanger
For New Construction
(1x2 Conduit Configuration)

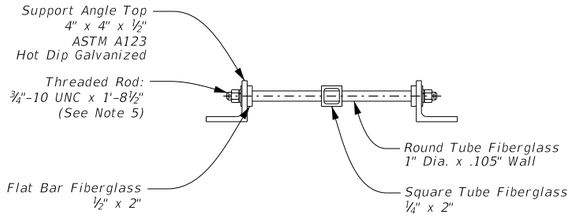

Underside ITS Conduit Hanger Spacer - Top View (Typ.)

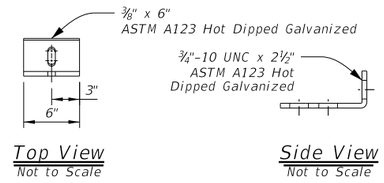

Detail A
Support Mounting Bracket Detail

General Notes:

1. Use commercially designed multiple conduit support hangers as an alternative to the hanger details on this sheet. Submit hanger details and specifications to the Engineer for approval prior to using on project.
2. Refer to the contract plans for conduit design and hanger configuration requirements. For two (2) conduit configurations, use the typical underside hanger or roller hanger system.
3. Maximum spacing of intermediate conduit hangers is 5'-0" C-C.
4. Hangers vary in length, but do not allow conduit to hang below bridge beams. Refer to ITS(30) for minimum clearance requirement below bridge deck.
5. Ensure all conduit hanger steel shapes conform to ASTM A36 and expansion anchors conform to ASTM A307 and are supplied with minimum of one nut and washer per bolt. Galvanize all steel plate, shapes, and hardware per Item 445, "Galvanizing".
6. Use angle bracing on both sides of conduit support for conduit anchor point hangers.
7. Refer to ITS(32) for expansion-deflection joint details.
8. Provide a minimum of two (2) expansion joints at all bridges. Ensure expansion joint spacing does not exceed manufacturer recommendations.
9. Select conduit lengths so that couplings do not coincide with conduit hanger locations.
10. Allowable types of outer duct material for above ground ITS conduit include rigid metallic conduit (RMC) and fiberglass.
11. Ground all galvanized rigid metallic conduit (RMC) hangers per manufacturer recommendations when electrical conductors present.
12. Refer to ITS(30) for anchor details through pre-stressed concrete panels.
13. Bond all external structure mounted conduit throughout entire length of run and ground the run at ground box locations according to ITS(37) and ITS(39).

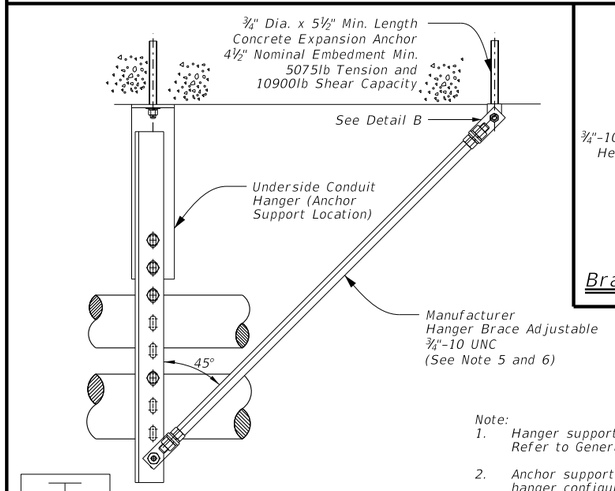

Note:
1. Hanger support shown is a typical configuration. Refer to General Note 1 on this sheet.
2. Anchor supports are required for all conduit hanger configurations.

Underside ITS Conduit
Anchor Hanger Support (Typ.)

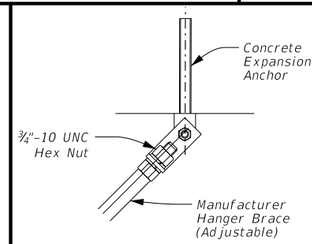

Detail B
Brace Mounting Bracket Detail

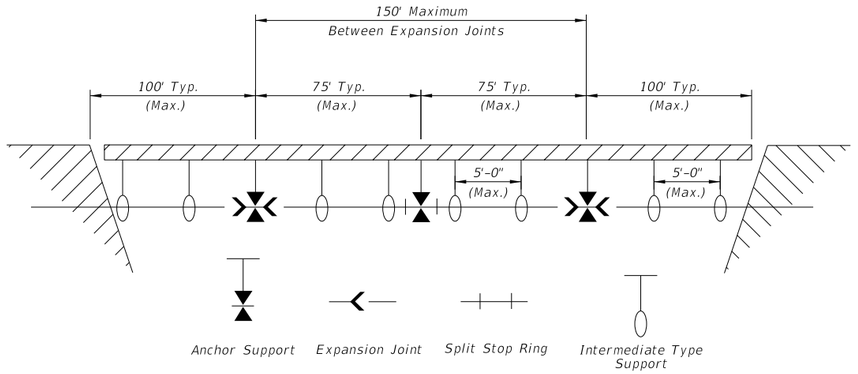

Notes:
1. Install conduit supports within 3'-0" of all enclosures and conduit terminations.
2. The number of intermediate supports varies based upon the distance between anchor supports.

Underside Anchor Hanger Support Spacing (Typ.) *

* Refer To BICSI Outside Plant Design Reference Manual (OSPDRM) For Conduit Hanger Expansion Joint Placement

Sheet Details
Not to Scale

Texas Department of Transportation

Traffic Operations Division Standard

ITS CONDUIT HANGER DETAILS

ITS(29)-16

FILE: its(29)-16.dgn	DN: TxDOT	CK: TxDOT	DW: TxDOT	CK: TxDOT
©TxDOT FEBRUARY 2016	CONT	SECT	JOB	HIGHWAY
REVISIONS				
	DIST	COUNTY		SHEET NO.

DISCLAIMER:
The use of this standard is governed by the "Texas Engineering Practice Act". No warranty of any kind is made by TxDOT for any purpose whatsoever. TxDOT assumes no responsibility for the conversion of this standard to other formats or for incorrect results or damages resulting from its use.

DATE:
FILE:

Note:

1. For installations on existing bridge decks using precast concrete panels (PCP), locate expansion anchor drilling locations to avoid pre-stressed strand in the precast panels. Refer to standards for precast concrete panels for strand layout details.

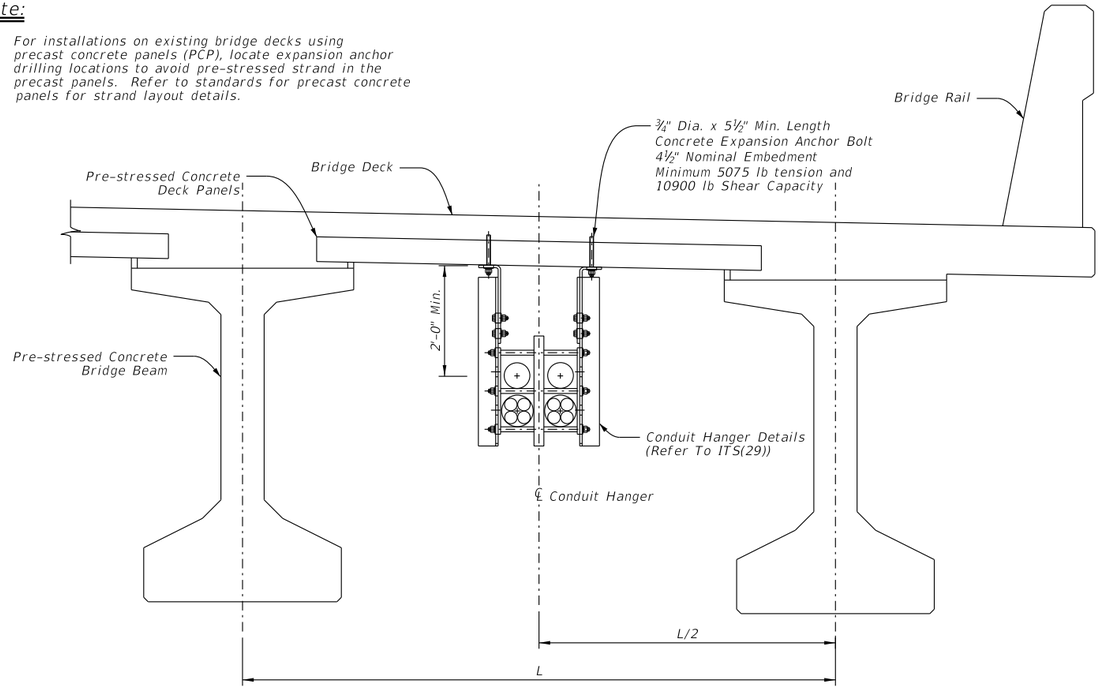

Structure Mounted ITS Conduit – Concrete Bridge Deck With Precast Panels

Refer To ITS(29) For General Notes

Note:

1. Position conduit hanger height to avoid conflicts with diaphragms in the conduit runs.

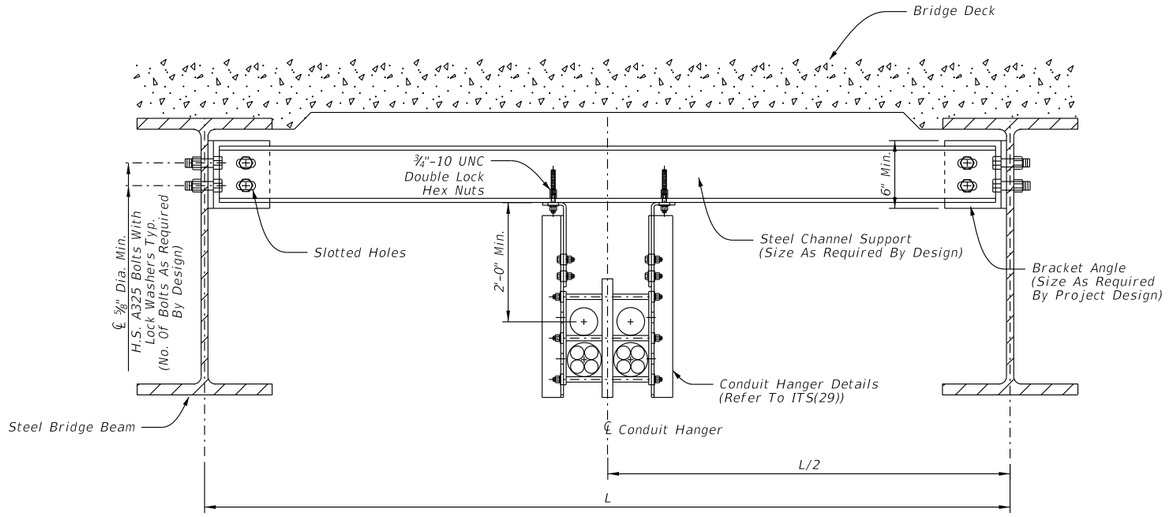

Typical Alternate Conduit Hanger Support (Steel I-Beam Mount)

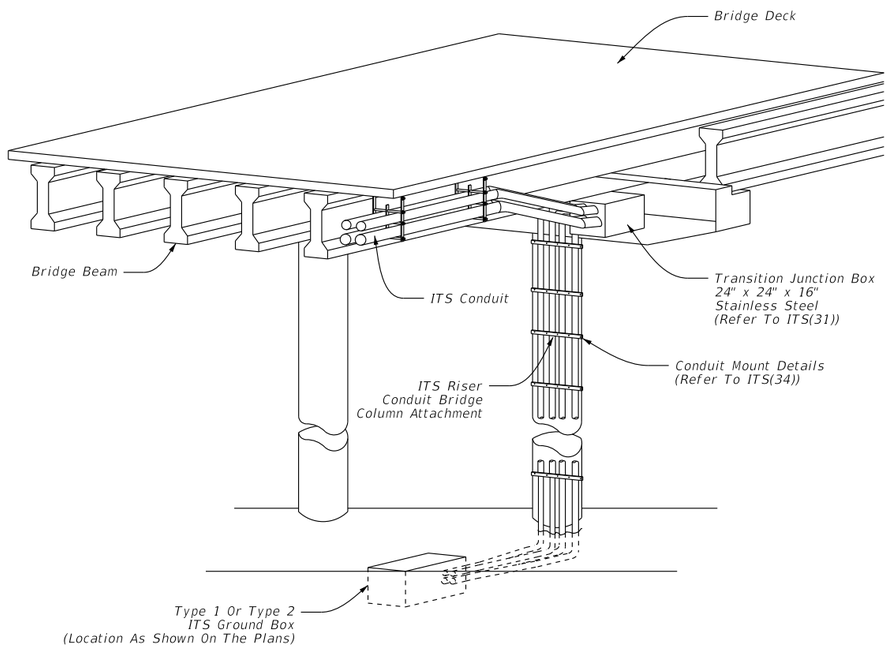

Underside Conduit Hanger Transition Detail

General Notes:

1. The alternative mounting conduit hanger support mounting detail for steel I-Beam structures as shown is a suggested detail for steel structures. Submit details for the configuration shown on this sheet via shop drawings and include structural load analysis, support member and connection design. Seal all calculations and shop drawings by a Texas P.E.
2. Conduit hanger support mounting details for concrete bridge deck with precast panels as shown are a suggested method for pre-stressed concrete beam structures. Submit any deviation from these details via shop drawing and include structural load analysis, support member, and connection design. Seal all calculations and shop drawings by a Texas P.E.
3. Locate auxiliary conduit hanger supports for steel structures at a maximum 5'-0" spacing.
4. For conduit loads located between beams exceeding 5 lbs per ft, furnish structural load analysis calculations for adjacent beams in the shop drawing submission.
5. Submit design details for structure with cathodic protection in the shop drawing submission.
6. Do not extend conduit hangers below the bottom of the bridge beams (any exceptions at end spans are subject to approval).
7. Drilling in pre-stressed beams or field welding of steel beams is not permitted. Submit any exceptions on a case by case basis for evaluation and approval by the Engineer.
8. Ensure all conduit hanger assemblies are furnished and supplied by the conduit hanger manufacturer.
9. Galvanize all hardware and structural steel that is not stainless steel. Ensure all bolt hardware used to secure hangers to steel structures conforms to A325 for high strength. Ensure all expansion anchors conform to ASTM A307. Separate dissimilar materials for use of galvanized hardware with weathering steel girders.
10. Select conduit lengths so that couplings do no coincide with conduit hanger locations.
11. Refer to Special Specification, "ITS Multi-Duct Conduit" or Item 618 "Conduit", for details on conduit mandreling and other testing required upon conduit installation.
12. Provide a flat pull cord in each conduit and inner duct to allow for installation of future cables to match 1250 lbs-ft tension. Refer to ITS(27) for additional conduit details.
13. Provide a transition junction box for conduit access located outside the abutments for bridge spans < 800 ft. For bridge spans > 800 ft., locate an additional junction box for conduit access near the mid-span/pier.
14. Provide ITS conduit of the type and configuration shown on the plans in accordance with Special Specification, "ITS Multi-Duct Conduit" or Item 618 "Conduit". Ensure all other conduit is in accordance with Item 618 "Conduit" and as shown on the plans.
15. Bond all external structure mounted conduit throughout entire length of run and ground the run at ground box locations according to ITS(37) and ITS(39).

Sheet Details
Not to Scale

Texas Department of Transportation

Traffic Operations Division Standard

STRUCTURE MOUNTED ITS CONDUIT

ITS(30)-16

FILE: its(30)-16.dgn	DN: TxDOT	CK: TxDOT	DW: TxDOT	CK: TxDOT
©TxDOT FEBRUARY 2016	CONT	SECT	JOB	HIGHWAY
REVISIONS				
	DIST	COUNTY		SHEET NO.

DISCLAIMER:
The use of this standard is governed by the "Texas Engineering Practice Act". No warranty of any kind is made by TxDOT for any purpose whatsoever. TxDOT assumes no responsibility for the conversion of this standard to other formats or for incorrect results or damages resulting from its use.

DATE:
FILE:

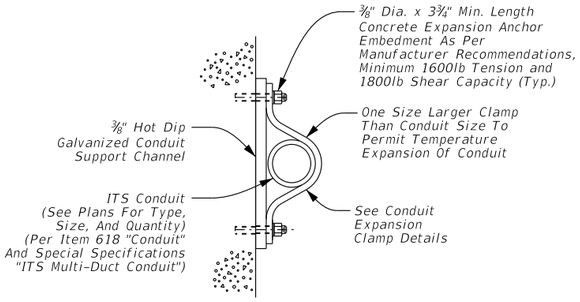

Conduit Expansion Clamp

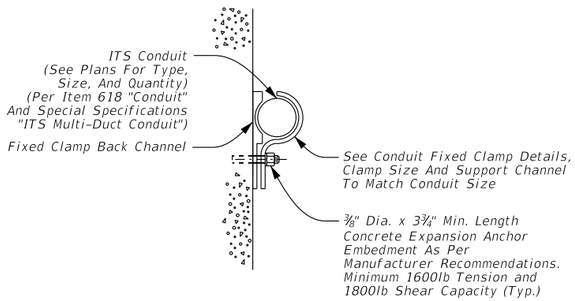

Conduit Fixed Clamp

Conduit Clamp Details (Typ.)

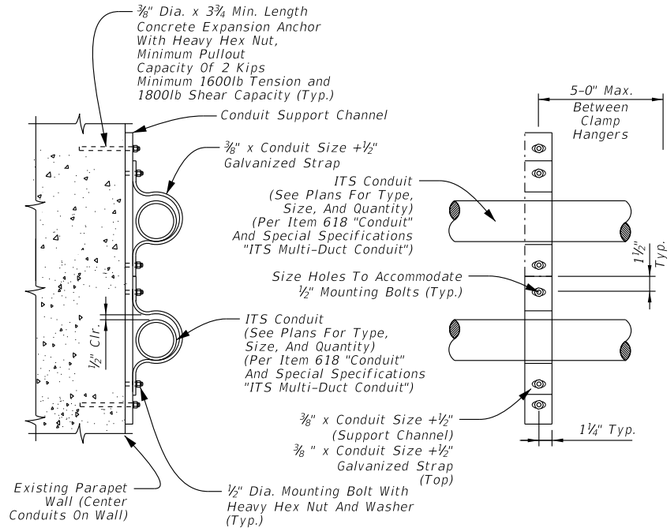

Side View

Top View

Elevation View

Conduit Expansion Clamp Details

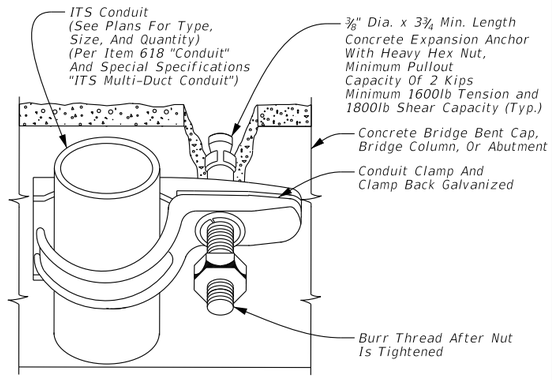

Conduit Fixed Clamp Back Channel

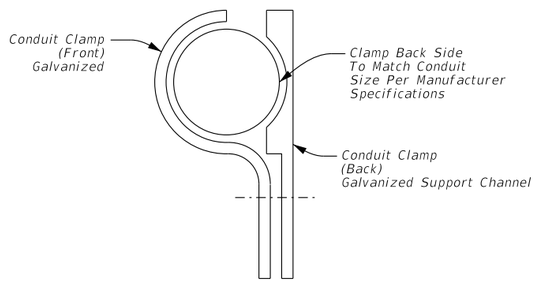

Conduit Fixed Clamp Details
Side View

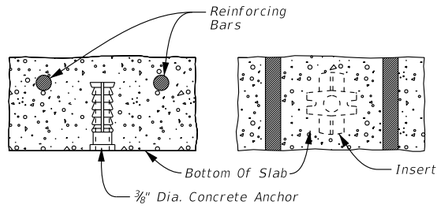

Conduit Fixed Clamp Concrete Insert Detail

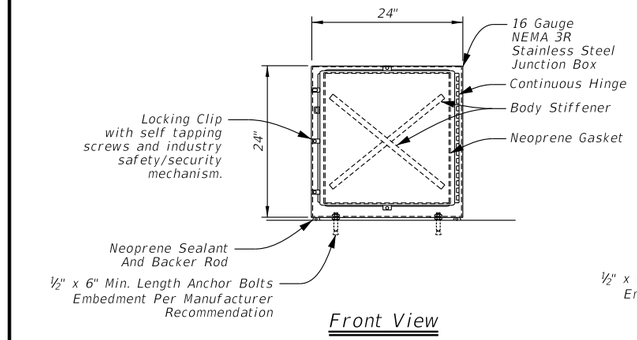

Front View

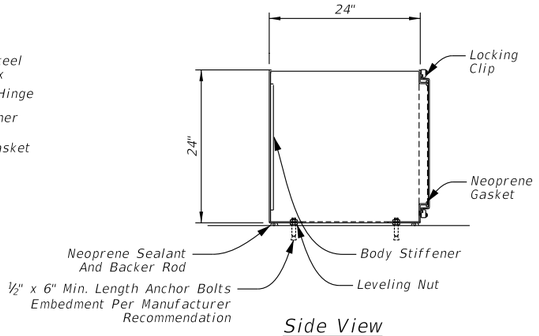

Side View

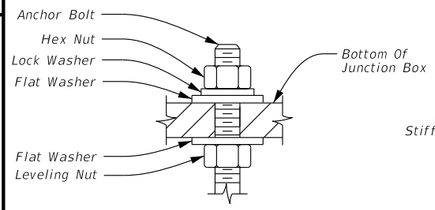

Anchor Bolt Detail
(May Vary On Mounting Scenario)

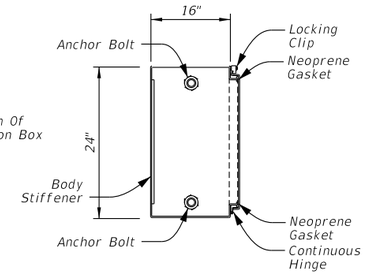

Top View

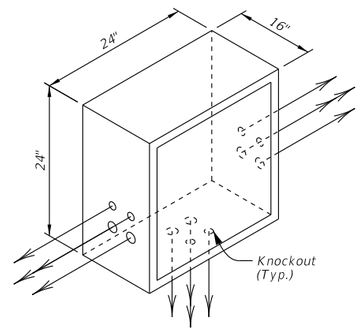

Isometric View

24" X 24" X 16" Stainless Steel Transition Junction Box Detail

Notes:
1. Transition box as depicted is top mount. Actual anchor fasteners and knockout location will vary based upon mount location and manufacturer recommendations.
2. Secure the transition box cover using self tapping screws with industry safety/security mechanism.
3. Typical knockout locations shown are for diagrammatic purposes only. The number of transition boxes required at a given location will vary depending on the number of conduits and cable storage requirements for cabling run(s).

General Notes:

1. Ensure all duct/conduit bends are in accordance with the latest version of the NFPA 70, National Electrical Code and as recommended by the manufacturer.
2. Utilize separate transition junction boxes for communications and electrical conduit runs.
3. Maintain constant slope in all duct/conduit runs.
4. Ensure maximum spacing of conduit clamps is 5'-0" C-C.
5. Galvanize all hardware, including anchor bolts, nuts, and washers per TxDOT Item 445, "Galvanizing". Ensure all expansion anchors conform to ASTM A307.
6. Provide a minimum NEMA 3R junction boxes. Construct all junction boxes in accordance with manufacturer specifications. Install junction boxes in accordance with the latest edition of NFPA 70, National Electrical Code.
7. Junction boxes and associated appurtenances are incidental to ITS conduit.
8. Install all conduit sweeps into junction boxes in accordance with allowable bend radius of the installed cable.
9. Install conduit support within 3'-0" of all enclosures and conduit terminations.
10. Refer to ED standard sheets for additional details on parapet mounted conduit.

Texas Department of Transportation

Traffic Operations Division Standard

PARAPET MOUNTED ITS CONDUIT AND TRANSITION BOX DETAIL

ITS(31)-16

FILE: its(31)-16.dgn	DN: TxDOT	CK: TxDOT	DW: TxDOT	CK: TxDOT
©TxDOT FEBRUARY 2016	CONT	SECT	JOB	HIGHWAY
REVISIONS				
	DIST	COUNTY		SHEET NO.

Sheet Details
Not to Scale

DISCLAIMER:
The use of this standard is governed by the "Texas Engineering Practice Act". No warranty of any kind is made by TxDOT for any purpose whatsoever. TxDOT assumes no responsibility for the conversion of this standard to other formats or for incorrect results or damages resulting from its use.

DATE:
FILE:

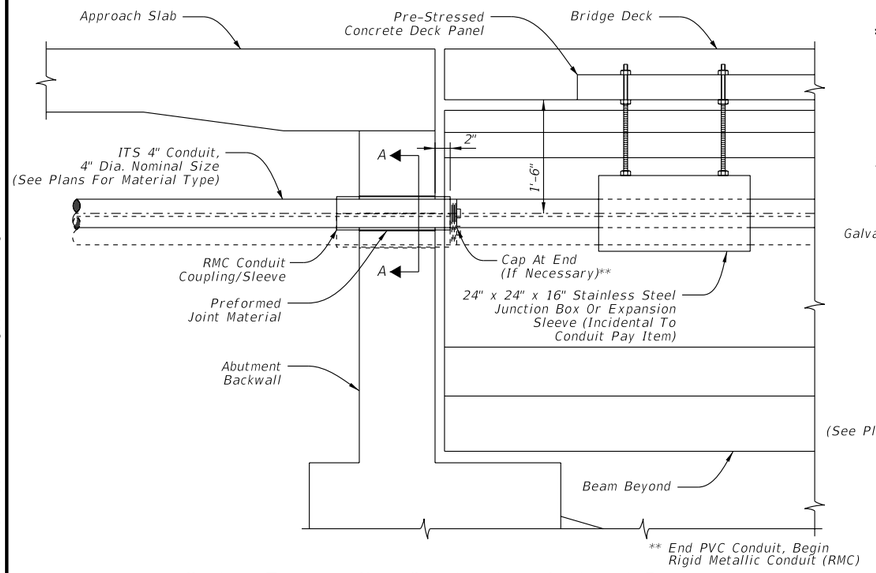

Section Through New Construction Abutment Backwall

Standard Notes:

1. If constant conduit elevation is maintained from the abutment backwall to the underside conduit hangers, provide an expansion joint sleeve (same size as conduit) with one travel overlap. If conduit elevation varies from the abutment backwall to the underside conduit hangers, provide an abutment wall mounted transition junction box (NEMA 3R rated).
2. Provide separate pipe sleeve for each conduit through abutment backwall. Size sleeve per manufacturer recommendations.

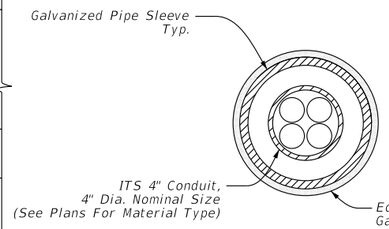

Section A-A (Typical Pipe Sleeve)

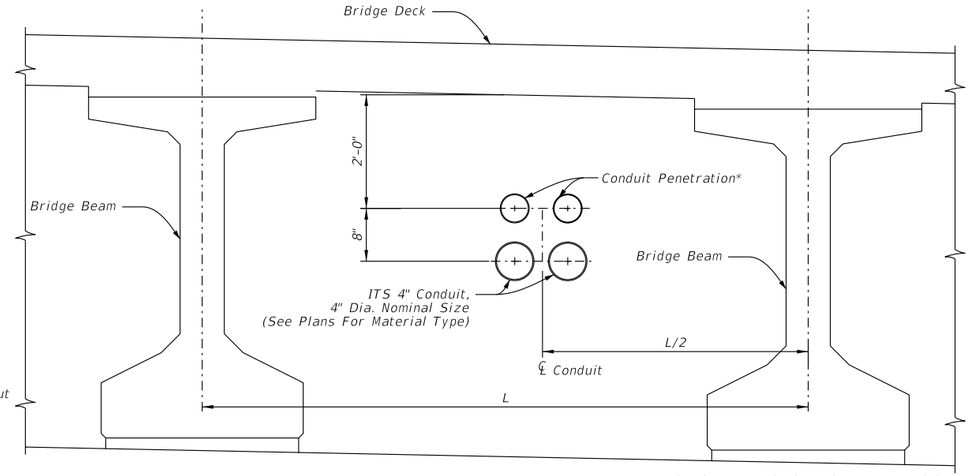

* Showing Control Dimensions For Conduits Thru Abutment Backwall. 2 x 2 Conduit Configuration Shown.

Abutment Elevation

ITS Conduit Transition At Bridge Abutment Detail

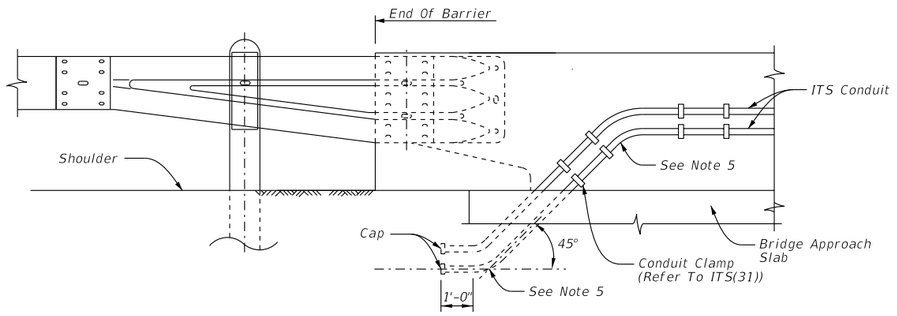

Parapet Mounted Conduit Transition To Ground Detail

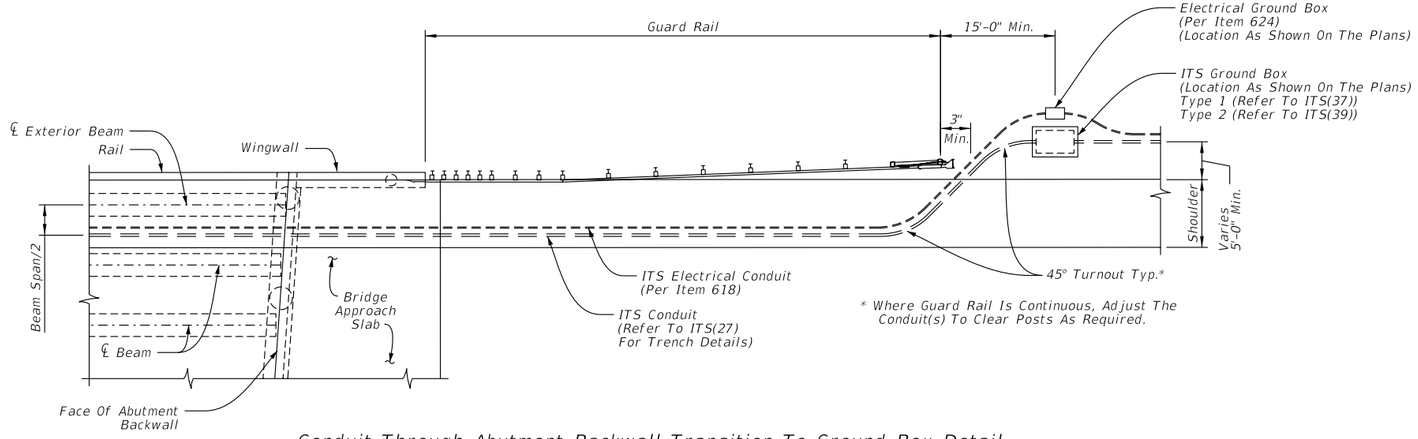

* Where Guard Rail Is Continuous, Adjust The Conduit(s) To Clear Posts As Required.

Conduit Through Abutment Backwall Transition To Ground Box Detail

General Notes:

1. An alternative option to conduit mountings shown is conduit encased within parapet or bridge structure at crossings. Submit shop drawings and specifications to the engineer for approval.
2. Install expansion sleeves at bridge expansion joints and per manufacturer recommendations.
3. For conduit crossings over bridges, provide ITS communications junction boxes at 1000' maximum spacing and electrical junction boxes at 450' maximum spacing.
4. Keep all junction boxes sufficiently clear of guard rail or other obstructions to maintain clear access.
5. Install conduit sweep at an angle that accommodates cable bend radius. Do not exceed 45 degrees to the shoulder line. Refer to ITS(28) for conduit turn-out details.
6. Do not install junction boxes within paved shoulder area.
7. Ensure all work is in compliance with the latest edition of NFPA 70, National Electrical Code.
8. Junction boxes and associated appurtenances are incidental to ITS conduit.
9. For installation requiring ITS conduit transition within mechanically stabilized earth (MSE) walls with select fill, locate conduit to avoid reinforced straps. Refer to retaining wall standards for further details.
10. Bond all external structure mounted conduit throughout entire length of run and ground the run at ground box locations according to ITS(37) and ITS(39).

Sheet Details
Not to Scale

Texas Department of Transportation

Traffic Operations Division Standard

ITS CONDUIT TRANSITION AT ABUTMENT

ITS(33)-16

FILE: its(33)-16.dgn	DN: TxDOT	CK: TxDOT	DW: TxDOT	CK: TxDOT
©TxDOT FEBRUARY 2016	CONT	SECT	JOB	HIGHWAY
REVISIONS				
	DIST	COUNTY		SHEET NO.

DISCLAIMER:
The use of this standard is governed by the "Texas Engineering Practice Act". No warranty of any kind is made by TxDOT for any purpose whatsoever. TxDOT assumes no responsibility for the conversion of this standard to other formats or for incorrect results or damages resulting from its use.

DATE:
FILE:

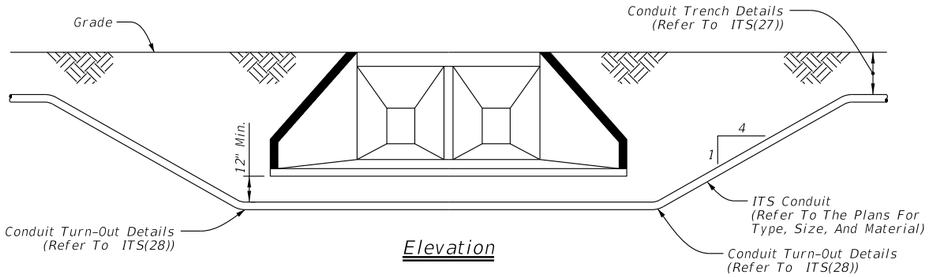

Elevation

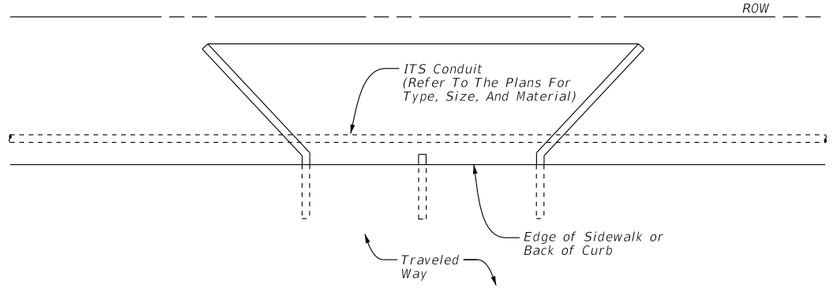

Plan View

Conduit Bored Under Culvert

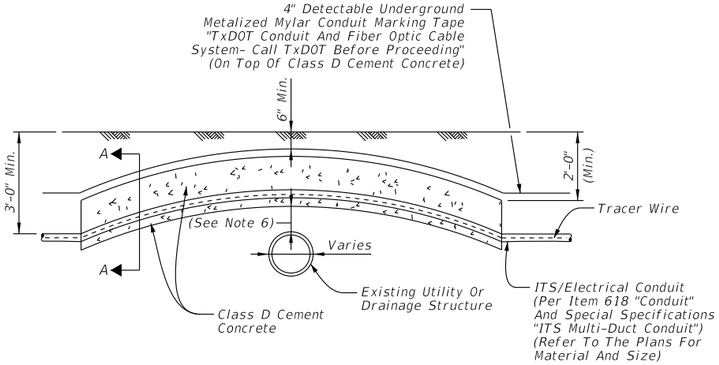

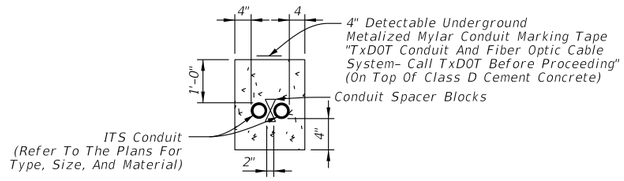

Section A-A

Conduit Installation Detail Above
Existing Drain Pipes Or Utilities

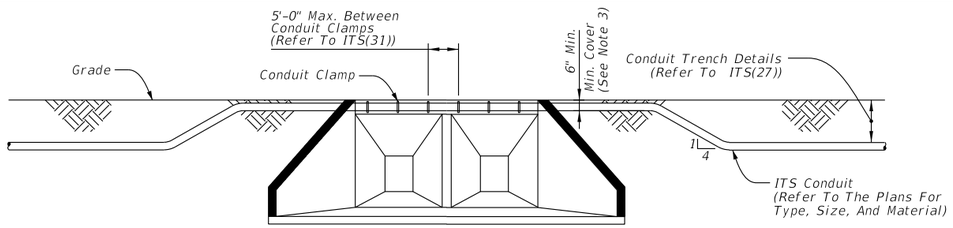

Elevation

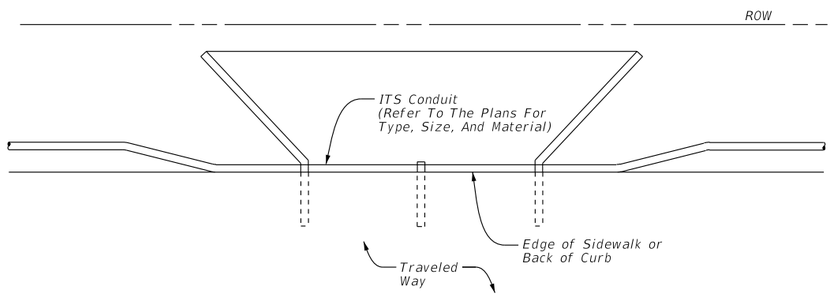

Plan View

Conduit Attached To Culvert Headwall

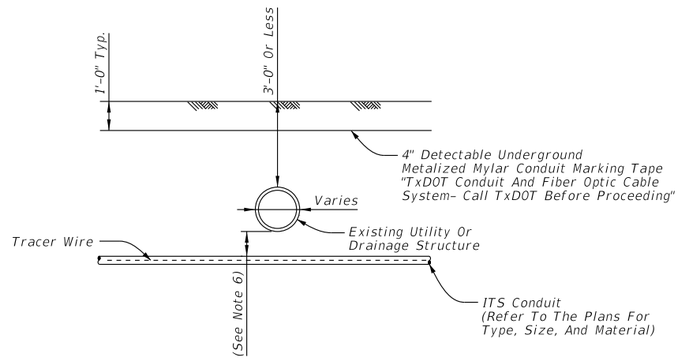

Conduit Installation Detail Below
Existing Drain Pipes Or Utilities

General Notes:

1. With approval from the field engineer adjust the final burial depth of conduit(s) in circumstances requiring traversal of non-movable object conflicts.
2. Where conduits are to be installed over existing underground infrastructure (i.e., existing utility or drainage structure) which are less than 3'-0" deep, encase conduit in Class D cement concrete in accordance with Item 421, "Hydraulic Cement Concrete", for the entire length of the conduit that is installed at a depth of less than 3'-0".
3. If depth of cover over encasement is less than 6", install the conduit to pass beneath the underground infrastructure.
4. Refer to the plans for type, size and configuration of all conduits. Refer to ITS(27) and ITS(28) for further installation details.
5. It is the responsibility of the contractor to verify all existing underground infrastructure. The contractor is responsible for any damage to any underground infrastructure during construction. Verify all utility locations at least 100' in advance of trenches, plowing or boring, and make changes in conduit placement in the event of conflict.
6. If proposed conduit is crossing or in close proximity to an existing underground utility, maintain a minimum clearance of 1'-6" vertical, 1'-6" horizontal or a clearance dictated by municipal code and or utility owner.
7. Install underground warning tape directly above all conduits per ITS(27) standard.
8. Do not install communications and electric cables in the same conduit. Separate conduits installed within the same trench based on NFPA 70, National Electrical Code. Refer to ITS(27) for additional conduit installation details.
9. Ensure all work is in compliance with the latest edition of NFPA 70, National Electrical Code.
10. Utilize PVC conduit for all underground applications as required by design. Transition with a conduit coupling to RMC conduit or other as required by design that is approved for above ground applications.
11. Do not exceed a rise:run ratio of 1:4 for conduit sloped through increases or decreases in elevation.

Texas Department of Transportation

Traffic Operations Division Standard

ITS CONDUIT OBSTRUCTION CROSSING

ITS(35)-16

FILE: its(35)-16.dgn	DN: TxDOT	CK: TxDOT	DW: TxDOT	CK: TxDOT
©TxDOT FEBRUARY 2016	CONT	SECT	JOB	HIGHWAY
REVISIONS				
	DIST	COUNTY		SHEET NO.

Sheet Details
Not to Scale

DISCLAIMER:
The use of this standard is governed by the "Texas Engineering Practice Act". No warranty of any kind is made by TxDOT for any purpose whatsoever. TxDOT assumes no responsibility for the conversion of this standard to other formats or for incorrect results or damages resulting from its use.

DATE:
FILE:

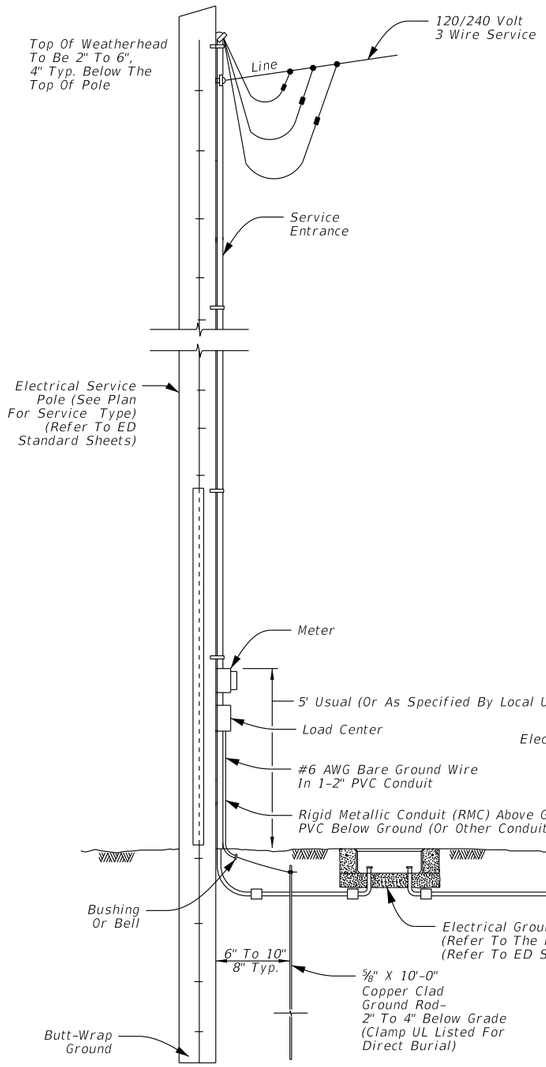

Typical ITS Device Site Layout

General Notes:

1. Seal all ITS communications conduits with waterproof duct plugs and seals.
2. Seal ends of all conduit entries into ITS cabinets with Oakum or other as approved by the District representative and pack with duct sealant.
3. Locate ground boxes for electrical and ITS communications within 5'-0" of cabinet enclosure, or as directed by the Engineer.
4. Refer to ED standard sheets for additional notes regarding electrical service.
5. Install service pole ground rod at alternate location when directed by the engineer. Maintain a minimum of 8'-0" in contact with the earth.
6. Utilize liquidtight flexible metal conduit (LFMC), as required when meter and service enclosure are mounted 90 to 180 degrees to each other. Refer to ED standard sheets for details on LFMC use.
7. Refer to ITS(21), ITS(37) and ITS(39) for details regarding conduit depth and entry into ITS ground boxes.
8. Lock all enclosures and bolt all ground box covers before power is applied to the circuit. Refer to the ITS cabinet references indicated on this sheet for cabinet lock requirements.
9. The detail shown is diagrammatic and is intended to represent a typical layout from electrical service to ITS devices.

Sheet Details
Not to Scale

Texas Department of Transportation

Traffic Operations Division Standard

TYPICAL ITS DEVICE SITE LAYOUT

ITS(36)-16

FILE: its(36)-16.dgn	DN: TxDOT	CK: TxDOT	DW: TxDOT	CK: TxDOT
©TxDOT FEBRUARY 2016	CONT	SECT	JOB	HIGHWAY
REVISIONS				
	DIST	COUNTY		SHEET NO.

DISCLAIMER:
The use of this standard is governed by the "Texas Engineering Practice Act". No warranty of any kind is made by TxDOT for any purpose whatsoever. TxDOT assumes no responsibility for the conversion of this standard to other formats or for incorrect results or damages resulting from its use.

DATE:
FILE:

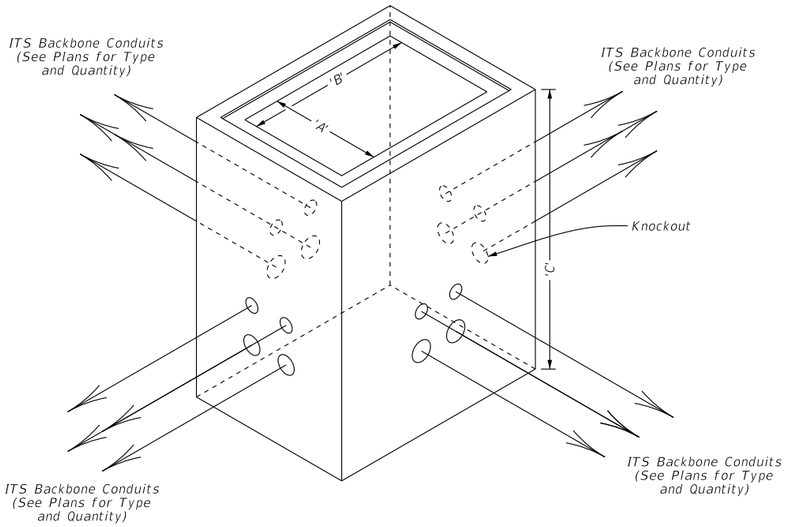

See Ground Box Schedule for A, B, and C Dimensions

Type 1 Ground Box Isometric View

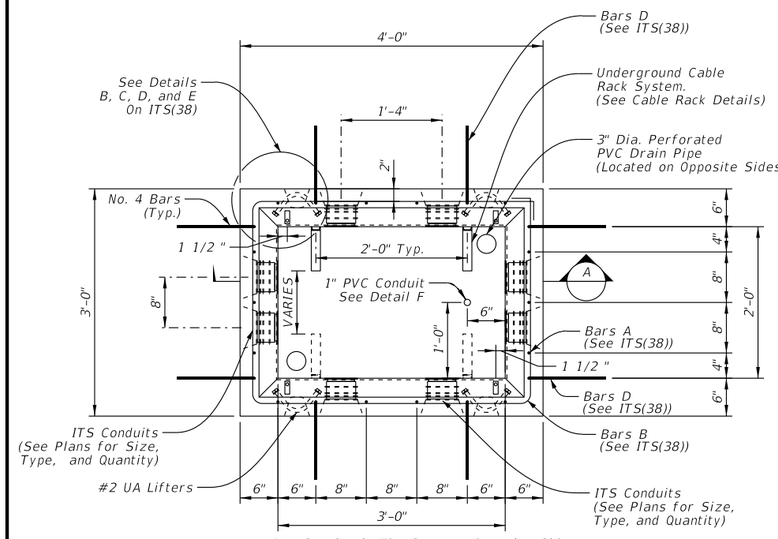

Note: Bar Spacing is The Same on Opposing Sides.

Type 1 Ground Box Plan View

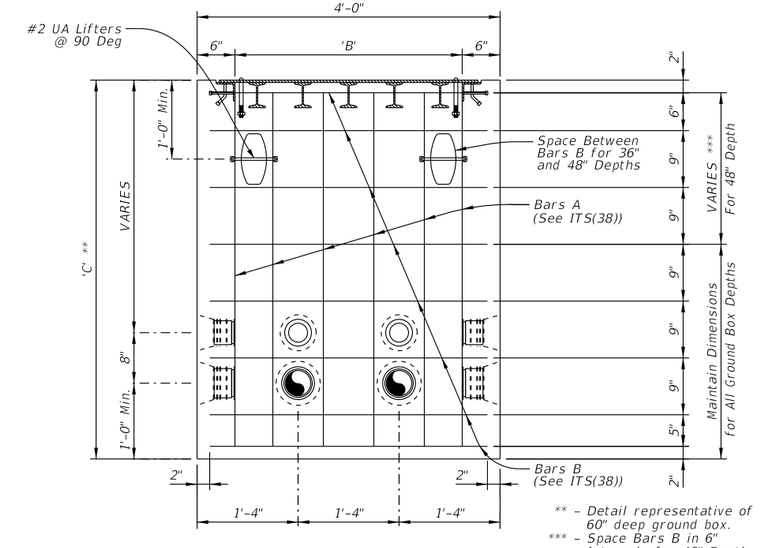

Type 1 Ground Box Elevation View

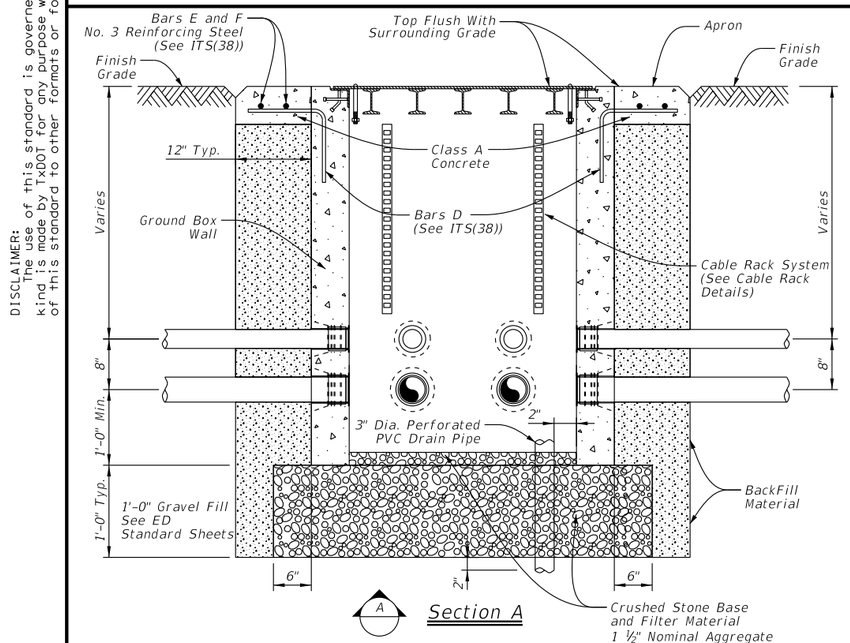

Section A

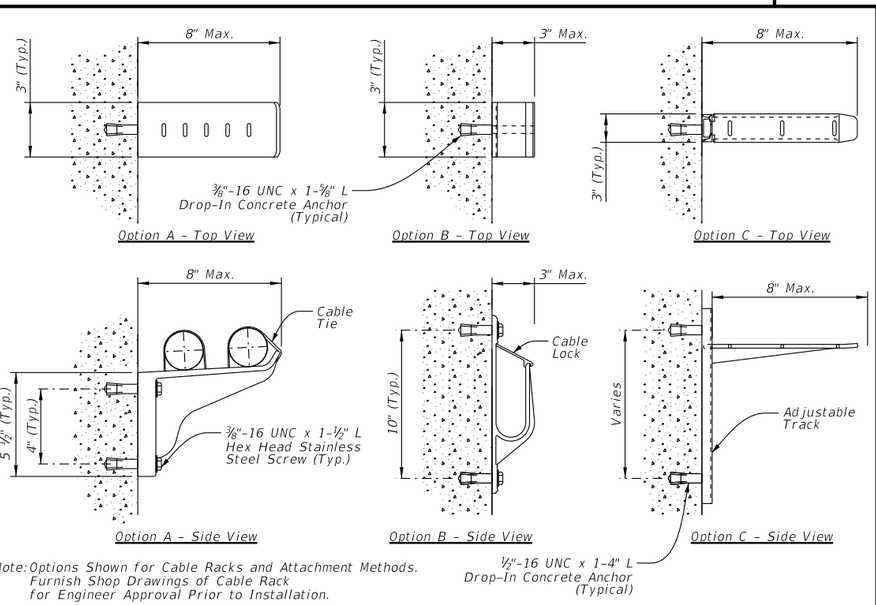

Note: Options Shown for Cable Racks and Attachment Methods. Furnish Shop Drawings of Cable Rack for Engineer Approval Prior to Installation.

Type 1 Cable Rack Details

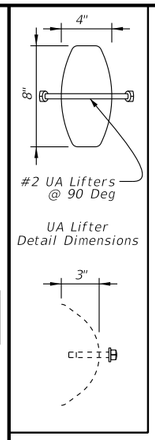

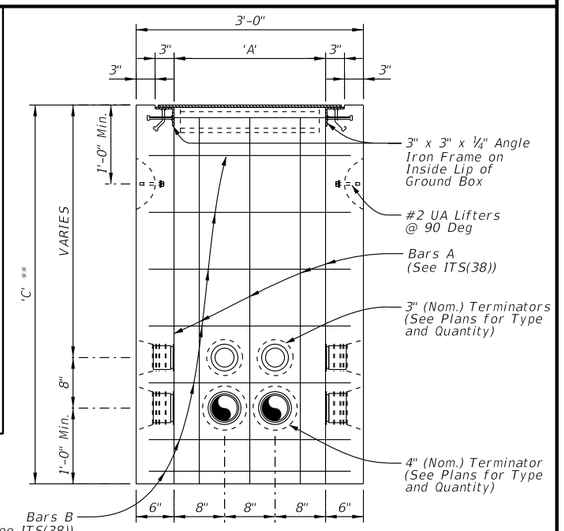

Type 1 Ground Box Side View

** - Detail representative of 60" deep ground box.

SHEET 1 OF 2

General Notes:

1. Conduit entry points shown represent the standard configuration for backbone conduit as detailed on ITS(27). Additional conduits may be required as shown on the plans.
2. Provide Class A concrete for Type "1" ground boxes.
3. Provide terminators for the PVC conduit cast in the walls and placed symmetrically about the centerline of the box at the depths shown, unless otherwise noted, for the number of conduits identified on the plans to enter the box.
4. Provide terminators appropriately sized for the conduits indicated on the plans. Provide terminators with an air tight and water tight connection.
5. Closed bottom Type "1" ground boxes are acceptable in lieu of open bottom boxes. Provide two 3" Dia. perforated PVC drain pipes on opposite corners to optimize water drainage. Provide 12-inch base of crushed stone which extends 6 inches in all directions from the perimeter of the box for closed bottom boxes. Crushed stone will be subsidiary to Special Specification, "ITS Ground Box."
6. Install all open bottom Type "1" ground boxes on a 12-inch base of crushed stone which extends 6 inches in all directions from the perimeter of the box. Crushed stone will be subsidiary to Special Specification, "ITS Ground Box."
7. Cap and seal terminators that do not have conduits attached.
8. When additional conduit entry points are needed to accommodate existing conduit, core drill conduit knockouts in the field of the appropriate number and size of conduit at each location, as directed by the Engineer.
9. Provide a bell fitting on the end of each conduit to ensure a flush fit inside the ground box.
10. Concrete grout around the knockout (inside and out) and around the conduit and bell fitting to ensure a neat watertight fit after the conduit and bell fitting have been placed in a knockout. Ensure all openings in the ground box are sealed prior to grouting operations.
11. Install a nylon string and plug all unused conduits with tug-plugs sized for the particular conduits. Provide split innerduct plugs in conduits or innerducts with cables to seal the innerduct around the cables to prevent water and dirt from entering.
12. Provide steel (ASTM A-153), glass reinforced nylon, or equivalent cable rack assemblies designed to support the amount of cable storage slack identified in the plans. Locate cable rack system on one side only (longer length side) to allow access to the inside of the ground box. Cable racks may be installed at the factory or in the field. When mounting cable racks in the field, seal all penetrations to the concrete side wall to prevent moisture penetration. Ground metallic cable rack systems to grounding system inside ground box in accordance with the National Electrical Code.

Ground Box Schedule

Ground Box Type	'A' Width Inside (Inches)	'B' Length Inside (Inches)	'C' Depth Inside (Inches)
Type 1	24	36	36, 48, 60

Sheet Details
Not to Scale

Texas Department of Transportation

Traffic Operations Division Standard

ITS GROUND BOX DETAILS TYPE "1" WITH STEEL COVER

ITS(37)-16

FILE: its(37)-16.dgn	DN: TxDOT	CK: TxDOT	DW: TxDOT	CK: TxDOT
©TxDOT FEBRUARY 2016	CONT	SECT	JOB	HIGHWAY
REVISIONS				
	DIST	COUNTY		SHEET NO.

DISCLAIMER:
The use of this standard is governed by the "Texas Engineering Practice Act". No warranty of any kind is made by TxDOT for any purpose whatsoever. TxDOT assumes no responsibility for the conversion of this standard to other formats or for incorrect results or damages resulting from its use.

DATE:
FILE:

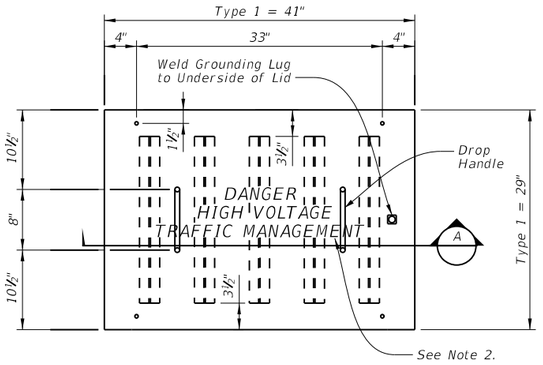

Type 1 Steel Cover Details
Top View

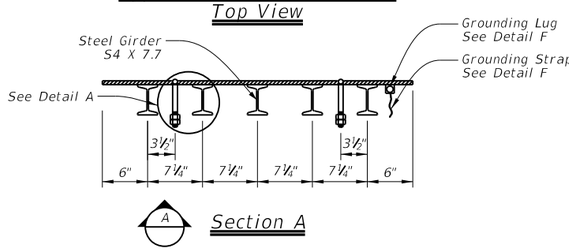

Section A

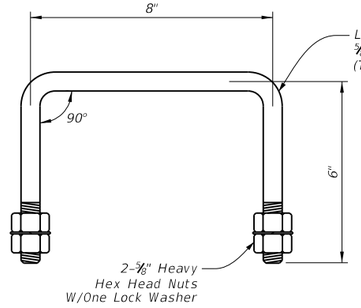

Drop Handle Detail

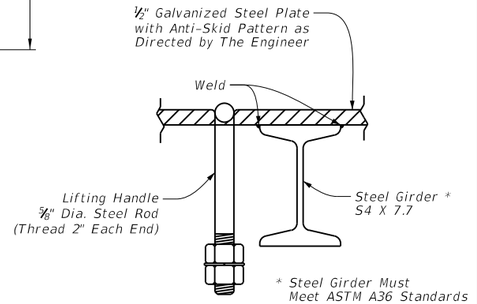

Detail A

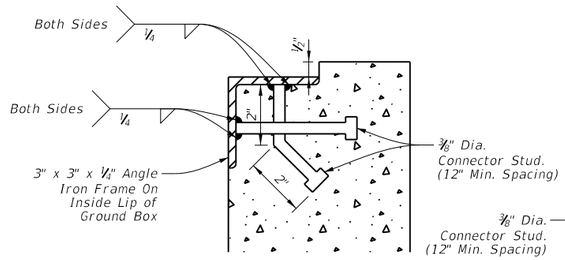

Detail B

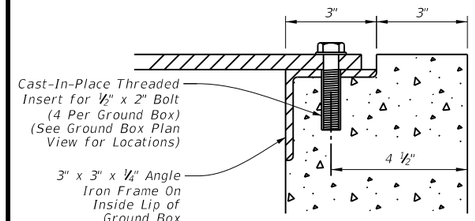

Detail C
Lid Attachment Detail

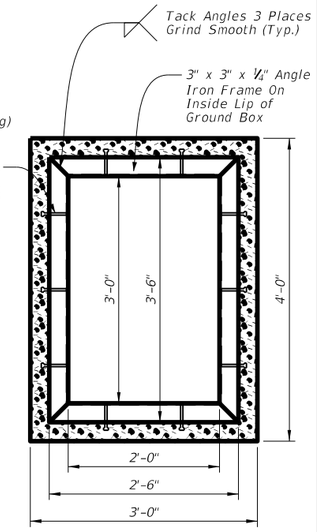

Detail D

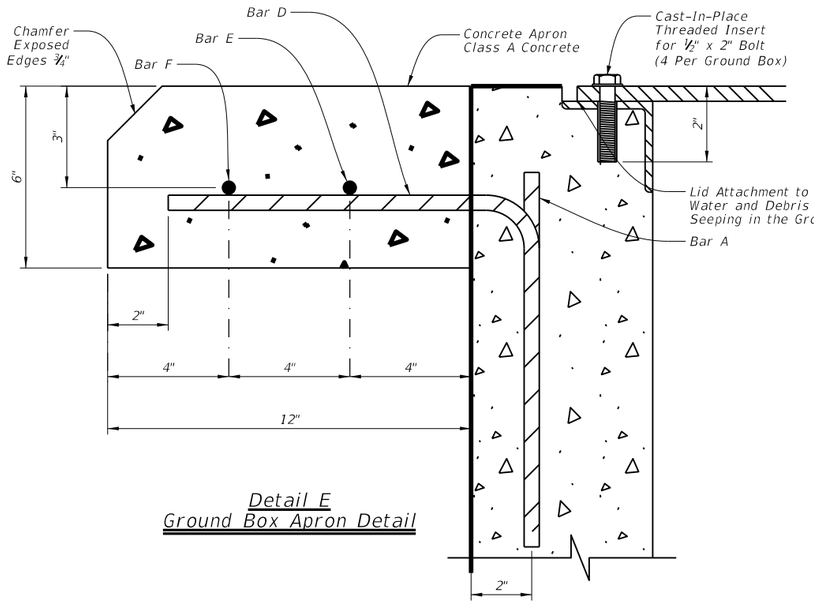

Detail E
Ground Box Apron Detail

Ground Box Type 1	BAR A					BAR B					BAR D					BAR E					BAR F					TOTALS	
	No.	Size	Ty.	Length	Weight	No.	Size	Ty.	Length	Weight	No.	Size	Ty.	Length	Weight	No.	Size	Ty.	Length	Weight	No.	Size	Ty.	Length	Weight	Steel * LBS.	Conc. * CY
36" Depth	22	#4	St.	2'-8"	39.3	5	#4	Bt.	13'-2"	44.1	8	#4	Bt.	2'-0"	10.7	1	#3	Bt.	17'-2"	6.5	1	#3	Bt.	19'-10"	7.5	108.1	.67
48" Depth	22	#4	St.	3'-8"	54.0	7	#4	Bt.	13'-2"	61.8	8	#4	Bt.	2'-0"	10.7	1	#3	Bt.	17'-2"	6.5	1	#3	Bt.	19'-10"	7.5	140.5	.89
60" Depth	22	#4	St.	4'-8"	68.8	8	#4	Bt.	13'-2"	70.6	8	#4	Bt.	2'-0"	10.7	1	#3	Bt.	17'-2"	6.5	1	#3	Bt.	19'-10"	7.5	164.1	1.11

* - For Contractors Information Only. Incidental to "ITS Ground Box".
Legend: Ty. = Type, St. = Straight, Bt. = Bent

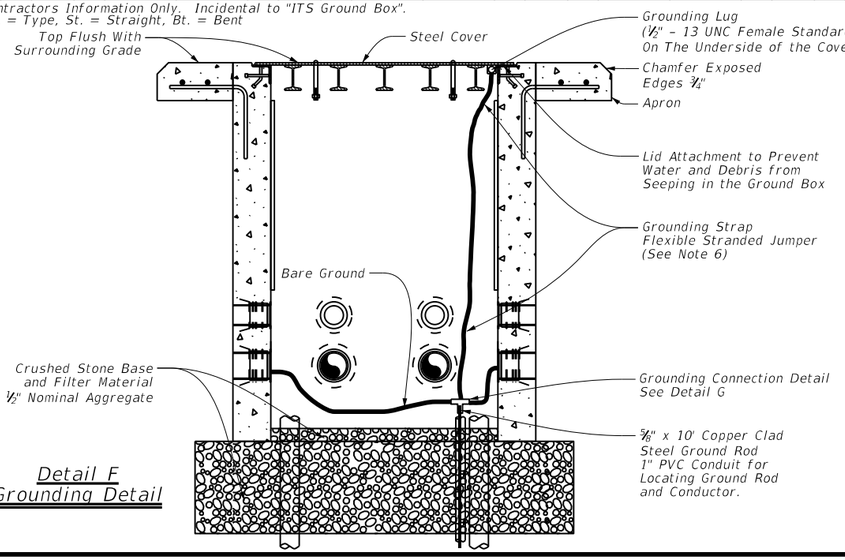

Detail F
Grounding Detail

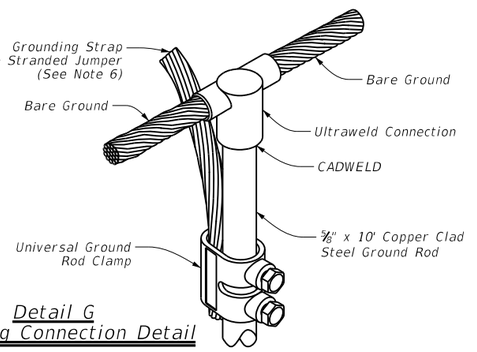

Detail G
Grounding Connection Detail

Note - All grounding connections to be CADWELD or approved equal. This work will not be paid for directly, but is considered incidental to ITS ground box.

General Notes:

1. See ITS(37) for additional Type "1" ground box details.
2. Hot-dip galvanized steel covers after all welds are made.
3. Label top of cover with the words "DANGER HIGH VOLTAGE TRAFFIC MANAGEMENT" using template-guided, hand-welded lettering at a height of 2 inches to ensure neatness.
4. Provide all Type "1" ground boxes with a securable, tamper-proof cover equipped with a bolting system that positively secures the cover in place.
5. Ground steel covers in accordance with the National Electrical Code.
6. Ground covers to the grounding cable using a split-bolt kearney clamp, and a minimum 8-foot long flexible stranded jumper the same size as the grounding conductor. Terminate to metal ground box cover with a tank ground type lug as approved and directed by the Engineer.
7. Provide Type "1" ground box and cover designed for heavy duty loading in accordance with AASHTO H20 loading when located where the box may experience deliberate, continuous vehicular traffic, such as near the shoulder or an auxiliary lane, or immediately adjacent to the unprotected edge of pavement.
8. Provide a Type "1" ground box and cover tested by a laboratory independent of the manufacturer certifying loading requirements are met. Provide certification of such tests to the Engineer for approval.
9. Provide a steel or cast iron cover in accordance with Item 471, Article 471.2, "Frames, Grates, Rings, and Covers." Provide covers with the number of drop handles shown. Provide Class "A" concrete for ground box construction and aprons.
10. Fabricate cover so to fits properly on the ground box, and no undue noise results when traffic contacts the cover.

Sheet Details
Not to Scale

Texas Department of Transportation

Traffic Operations Division Standard

ITS GROUND BOX DETAILS TYPE "1" WITH STEEL COVER

ITS(38)-17

FILE: its(38)-17.dgn	DN: TxDOT	CK: TxDOT	DW: TxDOT	CK: TxDOT
©TxDOT FEBRUARY 2016	CONT	SECT	JOB	HIGHWAY
REVISIONS				
5-17	DIST	COUNTY		SHEET NO.

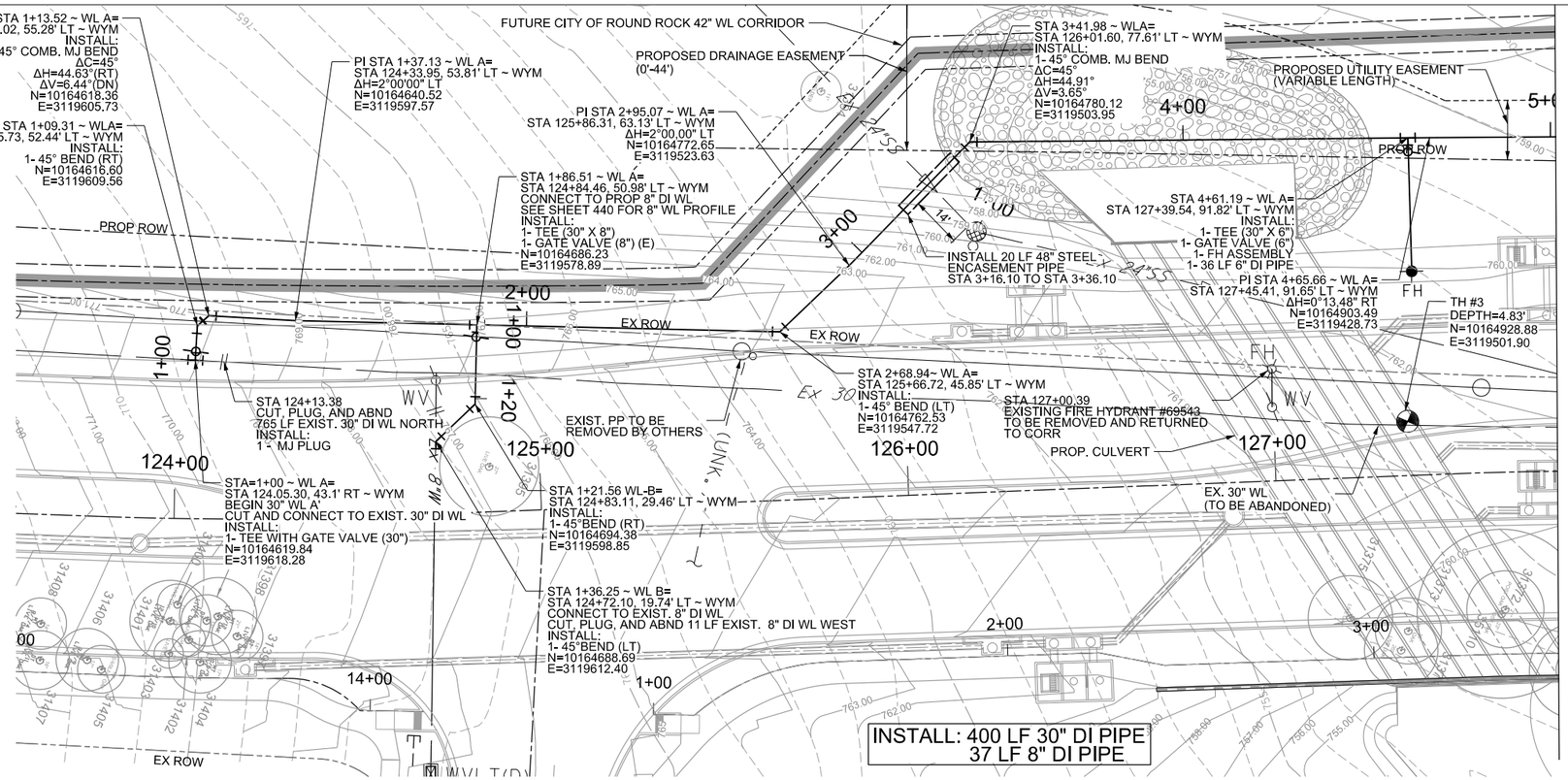

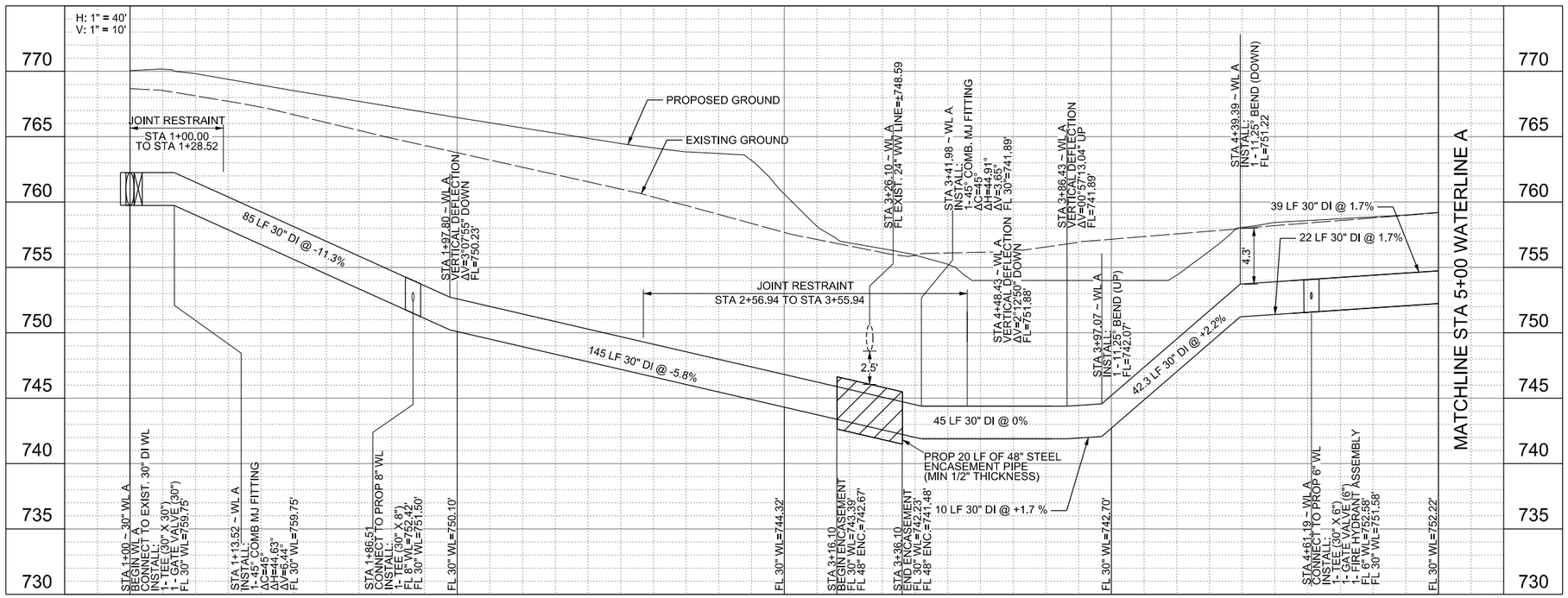

NOTES:

1. ALL WATERLINE FITTINGS, BENDS, AND VALVES TO BE RESTRAINED AND THRUST BLOCKED. ALL THRUST RESTRAINT MEASURES SHALL BE CONSIDERED SUBSIDIARY TO THE LINE ITEM BID FOR D.I. FITTINGS.

2. ALL JOINTS INSIDE STEEL ENCASEMENT TO BE RESTRAINED.

3. SALVAGE AND RETURN ALL EXISTING FIRE HYDRANTS AND VALVES THAT AREA REMOVED TO CITY OF ROUND ROCK. NOTICE MUST BE GIVEN 48 HOURS PRIOR TO RETURN.

4. ABANDONED 30" WL TO BE GROUT FILLED.

5. EXISTING WL TO BE SHUTDOWN FOR A MAXIMUM DURATION OF 1 DAY. SHUTDOWNS TO OCCUR FROM NOVEMBER THROUGH APRIL ONLY.

WYOMING SPRINGS
SEGMENT 1
ROUND ROCK, TX

ROUND ROCK TEXAS

halff
13620 BRANTWICK DR
BLDG C, STE 100
AUSTIN, TX 78729
(512) 777-4600
TBPELS FIRM #312

No.	Date	Revision
		Description

STATE OF TEXAS
NOAH S. SHAFFER
107722
LICENSED
PROFESSIONAL ENGINEER
4/13/23

100% SUBMITTAL

Project No.:	36179.002
Issued:	4/13/2023
Drawn By:	HW
Checked By:	NS
Scale:	1"=40

Sheet Title
WATER
PLAN AND PROFILE
(1 OF 2)

446
Sheet Number

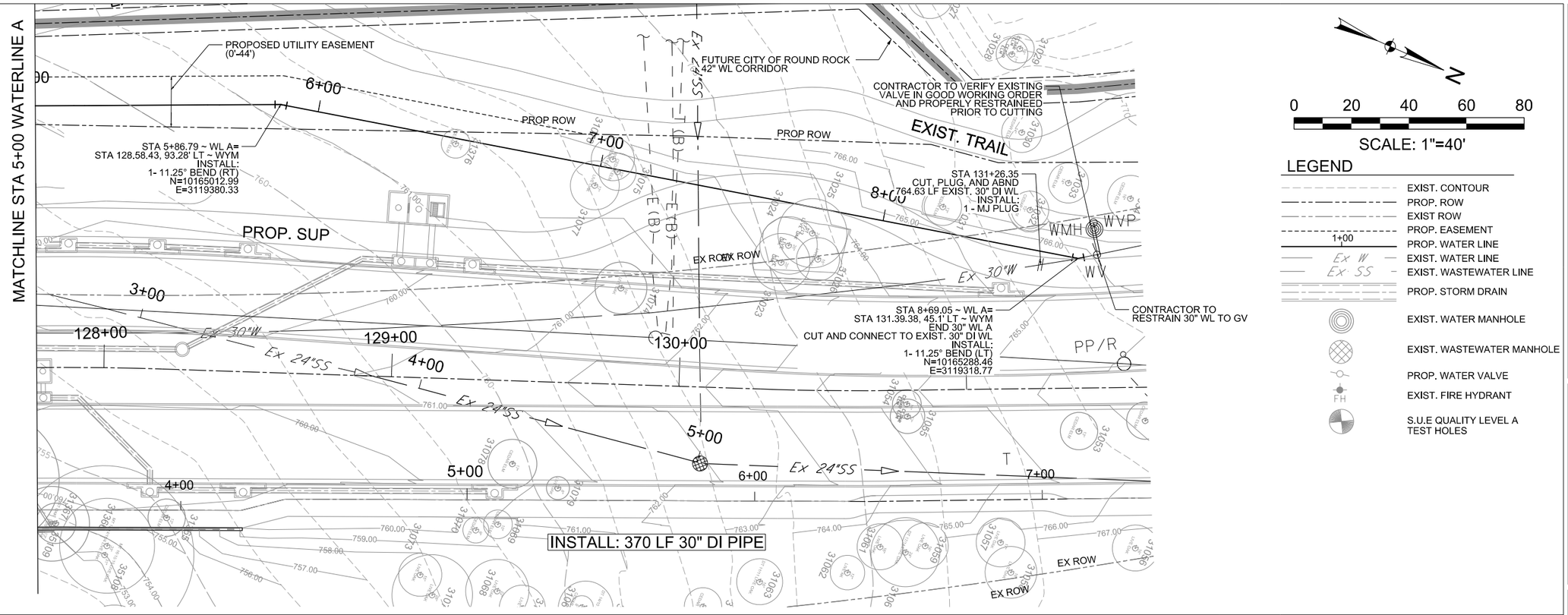

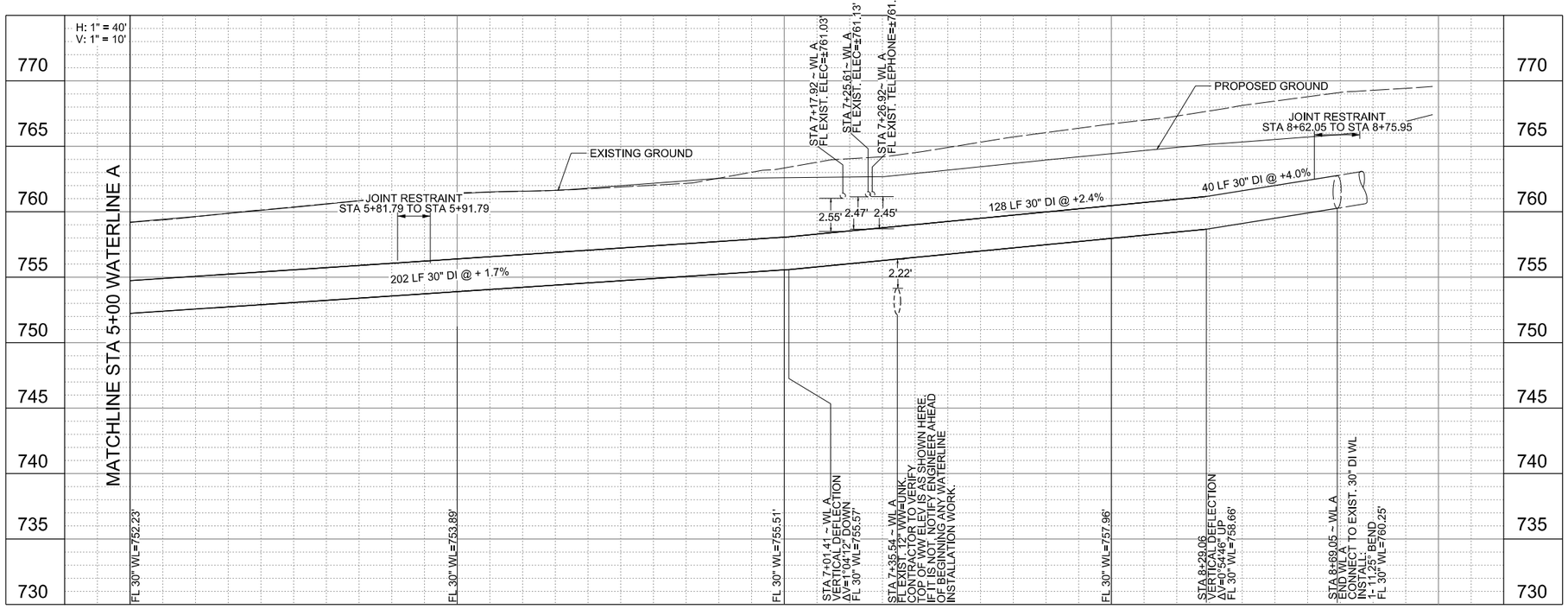

NOTES:

1. ALL WATERLINE FITTINGS, BENDS, AND VALVES TO BE RESTRAINED AND THRUST BLOCKED. ALL THRUST RESTRAINT MEASURES SHALL BE CONSIDERED SUBSIDIARY TO THE LINE ITEM BID FOR D.I. FITTINGS.
2. ALL JOINTS INSIDE STEEL ENCASEMENT TO BE RESTRAINED.
3. SALVAGE AND RETURN ALL EXISTING FIRE HYDRANTS AND VALVES THAT AREA REMOVED TO CITY OF ROUND ROCK. NOTICE MUST BE GIVEN 48 HOURS PRIOR TO RETURN.
4. ABANDONED 30" WL TO BE GROUT FILLED.
5. EXISTING WL TO BE SHUTDOWN FOR A MAXIMUM DURATION OF 1 DAY. SHUTDOWNS TO OCCUR FROM NOVEMBER THROUGH APRIL ONLY.

0 20 40 60 80

SCALE: 1"=40'

LEGEND

- EXIST. CONTOUR
- PROP. ROW
- EXIST ROW
- PROP. EASEMENT
- 1+00 PROP. WATER LINE
- Ex W EXIST. WATER LINE
- Ex SS EXIST. WASTEWATER LINE
- PROP. STORM DRAIN
- EXIST. WATER MANHOLE
- EXIST. WASTEWATER MANHOLE
- PROP. WATER VALVE
- FH EXIST. FIRE HYDRANT
- S.U.E QUALITY LEVEL A TEST HOLES

WYOMING SPRINGS
SEGMENT 1
ROUND ROCK, TX

ROUND ROCK TEXAS

halff
13620 BRANTWICK DR
BLDG C, STE 100
AUSTIN, TX 78729
(512) 777-4600
TBPELS FIRM #312

Revision No.	Date	Description

STATE OF TEXAS
NOAH S. SHAFFER
107722
LICENSED
PROFESSIONAL ENGINEER
4/13/23

100% SUBMITTAL

Project No.:	36179.002
Issued:	4/13/2023
Drawn By:	HW
Checked By:	NS
Scale:	1"=40

Sheet Title
WATER
PLAN AND PROFILE
(2 OF 2)

447
Sheet Number

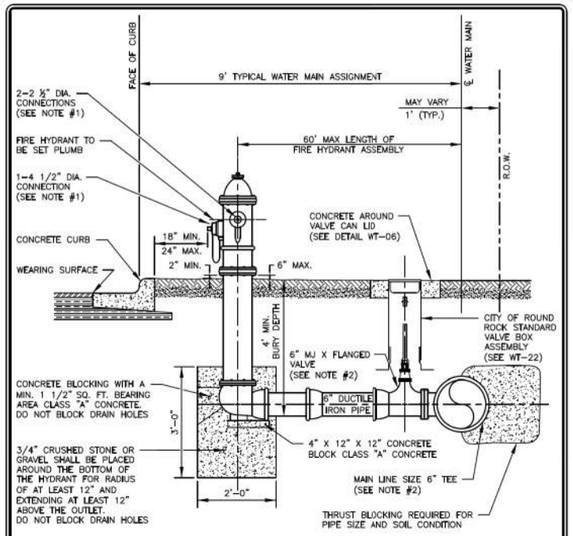

NOTES:

1. THREADS ON OUTLET NOZZLES SHALL BE NATIONAL STANDARD THREAD.
2. TEE MAY HAVE FLANGED OUTLET FOR MJ X FLANGED GATE VALVE OR, ANCHOR (SWIVEL) TEE MAY BE USED WITH MJ X MJ GATE VALVE.
3. A BLUE REFLECTIVE DELINEATOR OF TYPE APPROVED BY THE ENGINEER SHALL BE PLACED 2 TO 3 FEET OFFSET FROM THE CENTERLINE OF PAVED STREETS OR PAVED ACCESS WAYS, ON THE SIDE OF AND IN LINE WITH ALL NEWLY INSTALLED FIRE HYDRANTS.
4. PIPE, VALVE, TEE AND HYDRANT BARREL SHALL BE WRAPPED IN 8 MM POLY.
5. FIRE HYDRANT LEADS SHALL NOT CONTAIN ANY HORIZONTAL OR VERTICAL BENDS EXCEPT FOR WHAT IS SHOWN IN THE DETAIL.
6. FIRE HYDRANT LEAD AND ASSEMBLY SHALL BE RESTRAINED AND THRUST BLOCKED.

RECORD SIGNED COPY ON FILE AT U&ES DEPARTMENT	CITY OF ROUND ROCK	DRAWING NO: WT-05
APPROVED 03-01-18 DATE	FIRE HYDRANT ASSEMBLY DETAIL	
THE ARCHITECT/ENGINEER ASSUMES RESPONSIBILITY FOR THE APPROPRIATE USE OF THIS DETAIL. (NOT TO SCALE)		

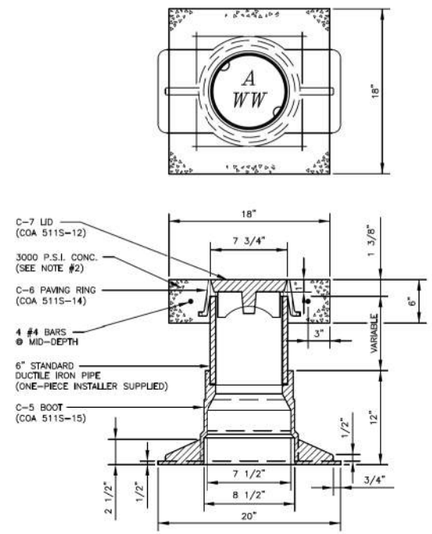

NOTES:

1. NUMBERED CASTINGS STANDARDS SHOWN IN PARENTHESES ARE REFERENCES TO THE CITY OF AUSTIN STANDARDS CRITERIA MANUAL.
2. DELETE CONCRETE AND REBAR WHEN VALVE IS WITHIN PAVED STREET.

RECORD SIGNED COPY ON FILE AT U&ES DEPARTMENT	CITY OF ROUND ROCK	DRAWING NO: WT-06
APPROVED 03-01-18 DATE	VALVE BOX ASSEMBLY DETAIL	
THE ARCHITECT/ENGINEER ASSUMES RESPONSIBILITY FOR THE APPROPRIATE USE OF THIS DETAIL. (NOT TO SCALE)		

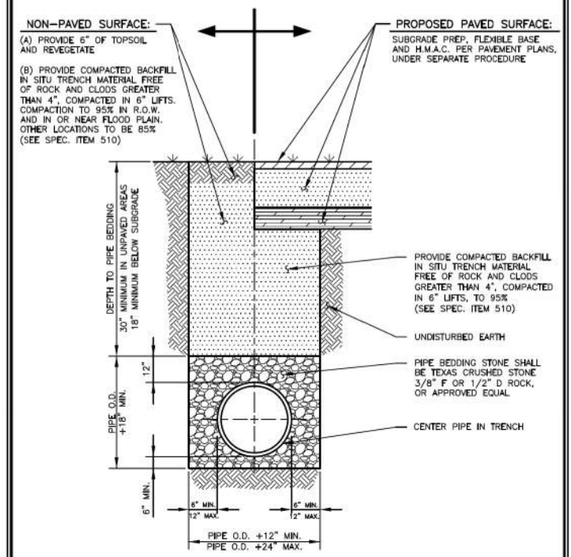

NOTE:

1. ALL TRENCHING AND TRENCH SAFETY SHALL COMPLY WITH APPLICABLE FEDERAL, STATE AND LOCAL REGULATIONS.

RECORD SIGNED COPY ON FILE AT U&ES DEPARTMENT	CITY OF ROUND ROCK	DRAWING NO: WT-08
APPROVED 03-01-18 DATE	WATERLINE BEDDING AND SURFACE REPAIR DETAIL (NON-PAVED & PROPOSED PAVED SURFACE)	
THE ARCHITECT/ENGINEER ASSUMES RESPONSIBILITY FOR THE APPROPRIATE USE OF THIS DETAIL. (NOT TO SCALE)		

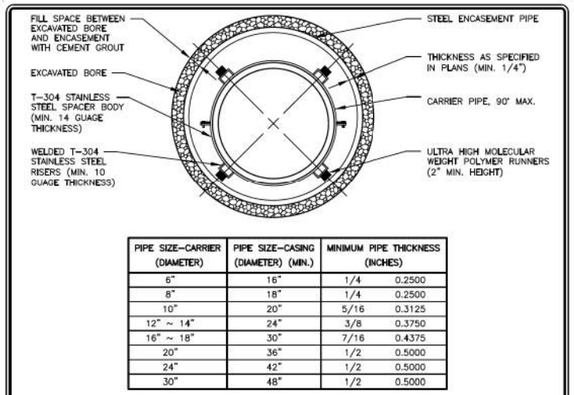

PIPE SIZE-CARRIER (DIAMETER)	PIPE SIZE-CASING (DIAMETER) (MIN.)	MINIMUM PIPE THICKNESS (INCHES)	
6"	16"	1/4	0.2500
8"	18"	1/4	0.2500
10"	20"	5/16	0.3125
12" ~ 14"	24"	3/8	0.3750
16" ~ 18"	30"	7/16	0.4375
20"	36"	1/2	0.5000
24"	42"	1/2	0.5000
30"	48"	1/2	0.5000

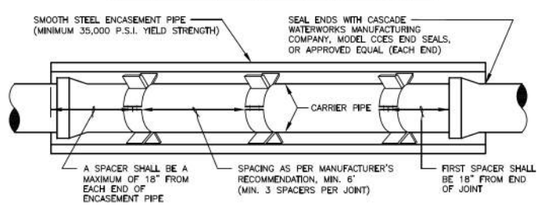

NOTES:

1. CASING SPACER CONFIGURATION AND SPACING SHALL BE AS SHOWN ON MANUFACTURER'S DRAWINGS FOR SPECIFIC WORK; THESE MUST BE ACCEPTABLE TO THE CITY OF ROUND ROCK.
2. CASING SPACER SHALL BE AS MANUFACTURED BY CASCADE WATERWORKS MANUFACTURING COMPANY, MODEL CCS, OR APPROVED EQUAL.

RECORD SIGNED COPY ON FILE AT U&ES DEPARTMENT	CITY OF ROUND ROCK	DRAWING NO: WT-16
APPROVED 03-01-18 DATE	PIPE ENCASEMENT DETAIL	
THE ARCHITECT/ENGINEER ASSUMES RESPONSIBILITY FOR THE APPROPRIATE USE OF THIS DETAIL. (NOT TO SCALE)		

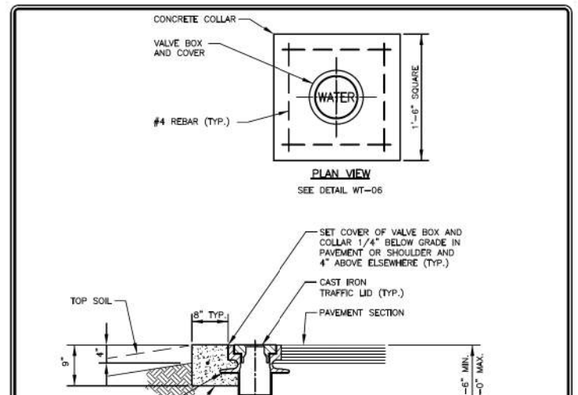

RECORD SIGNED COPY ON FILE AT U&ES DEPARTMENT	CITY OF ROUND ROCK	DRAWING NO: WT-22
APPROVED 03-01-18 DATE	GATE VALVE DETAIL	
THE ARCHITECT/ENGINEER ASSUMES RESPONSIBILITY FOR THE APPROPRIATE USE OF THIS DETAIL. (NOT TO SCALE)		

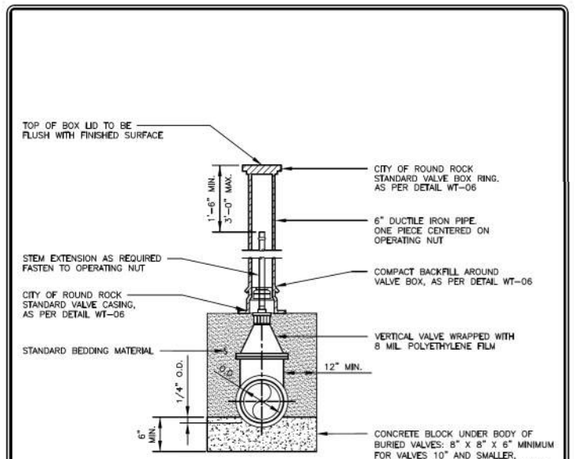

NOTES:

1. ALL VALVES AND VALVE CANS SHALL BE ACCESSIBLE FOR OPERATION ONCE THE NEW WATERLINE IS PUT INTO SERVICE. BURYING LINE VALVES IS PROHIBITED.
2. ALL VALVE LOCATIONS SHALL BE APPROPRIATELY MARKED "V" ON FACE OF CURB.

RECORD SIGNED COPY ON FILE AT U&ES DEPARTMENT	CITY OF ROUND ROCK	DRAWING NO: WT-11
APPROVED 03-01-18 DATE	VERTICAL VALVE INSTALLATION DETAIL	
THE ARCHITECT/ENGINEER ASSUMES RESPONSIBILITY FOR THE APPROPRIATE USE OF THIS DETAIL. (NOT TO SCALE)		

WYOMING SPRINGS
SEGMENT 1
ROUND ROCK, TX

ROUND ROCK TEXAS

halff
13620 BRANTWICK DR
BLDG C, STE 100
AUSTIN, TX 78729
(512) 777-4600
TBPELS FIRM #312

No.	Revision	Date	Description

STATE OF TEXAS
NOAH S. SHAFFER
107722
LICENSED PROFESSIONAL ENGINEER
4/13/23

100% SUBMITTAL

Project No.:	36179.002
Issued:	4/13/2023
Drawn By:	HW
Checked By:	NS
Scale:	

Sheet Title
WATER STANDARD DETAILS

448
Sheet Number

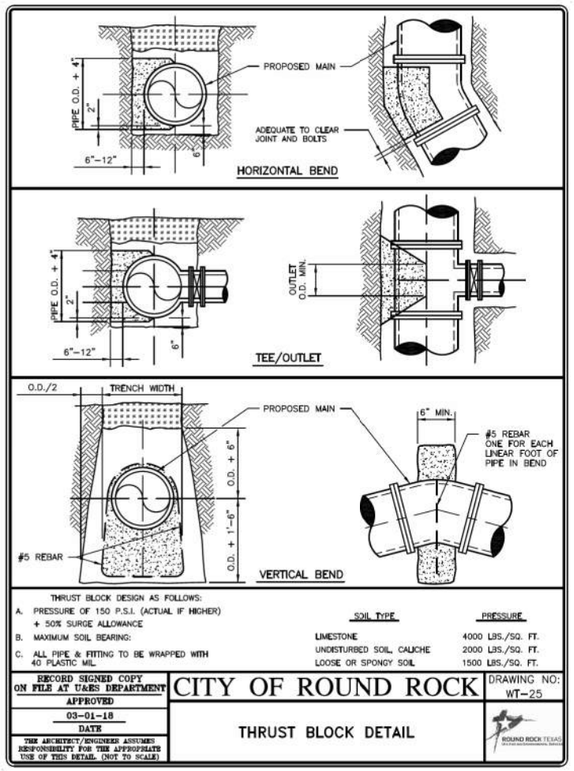

THRUST BLOCK DESIGN AS FOLLOWS:

A. PRESSURE OF 150 P.S.I. (ACTUAL IF HIGHER) + 50% SURGE ALLOWANCE

B. MAXIMUM SOIL BEARING:

SOIL TYPE	PRESSURE
LIMESTONE	4000 LBS./SQ. FT.
UNDISTURBED SOIL, CALICHE	2000 LBS./SQ. FT.
LOOSE OR SPONGY SOIL	1500 LBS./SQ. FT.

C. ALL PIPE & FITTING TO BE WRAPPED WITH 40 PLASTIC MIL.

RECORD SIGNED COPY ON FILE AT U&ES DEPARTMENT	CITY OF ROUND ROCK	DRAWING NO: WT–25
APPROVED 03–01–18 DATE	THRUST BLOCK DETAIL	ROUND ROCK TEXAS

THE ARCHITECT/ENGINEER ASSUMES RESPONSIBILITY FOR THE APPROPRIATE USE OF THIS DETAIL. (NOT TO SCALE)

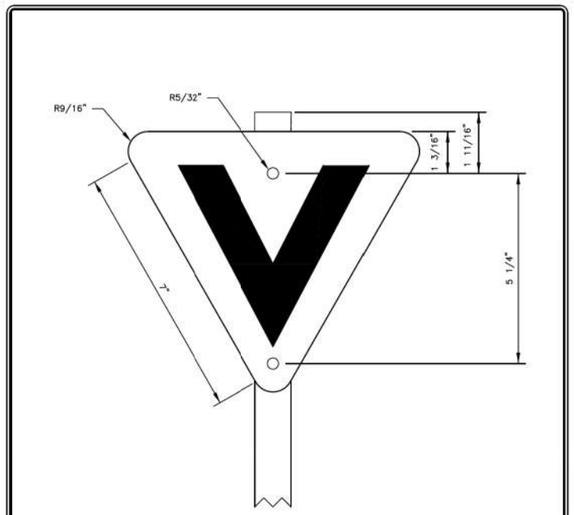

NOTES:

1. SIGN MATERIAL TO BE ALUMINUM.
2. SIGN TO BE ATTACHED TO 48" GALVANIZED STEEL ANGLE POST WITH DIMENSIONS 1" X 1" X 1/8".
3. COLORS:
   BACKGROUND – ORANGE
   V – BLACK
4. VALVE MARKING SIGNAGE TO BE INSTALLED IN AREAS DEEMED NECESSARY BY CITY STAFF.

RECORD SIGNED COPY ON FILE AT U&ES DEPARTMENT	CITY OF ROUND ROCK	DRAWING NO: WT–27
APPROVED 03–01–18 DATE	WATER VALVE SIGN DETAIL	ROUND ROCK TEXAS

THE ARCHITECT/ENGINEER ASSUMES RESPONSIBILITY FOR THE APPROPRIATE USE OF THIS DETAIL. (NOT TO SCALE)

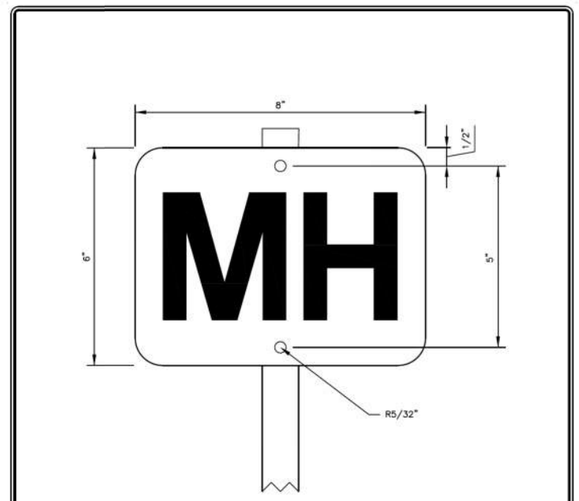

NOTES:

1. SIGN MATERIAL TO BE ALUMINUM.
2. SIGN TO BE ATTACHED TO 48" GALVANIZED STEEL ANGLE POST WITH DIMENSIONS 1" X 1" X 1/8".
3. COLORS:
   BACKGROUND – ORANGE
   LETTERING – BLACK
4. MANHOLE MARKING SIGNAGE TO BE INSTALLED IN AREAS DEEMED NECESSARY BY CITY STAFF.

RECORD SIGNED COPY ON FILE AT U&ES DEPARTMENT	CITY OF ROUND ROCK	DRAWING NO: WW–19
APPROVED 03–01–18 DATE	MANHOLE MARKER SIGNAGE DETAIL	ROUND ROCK TEXAS

THE ARCHITECT/ENGINEER ASSUMES RESPONSIBILITY FOR THE APPROPRIATE USE OF THIS DETAIL. (NOT TO SCALE)

PROPOSED 8-IN WATER LINE

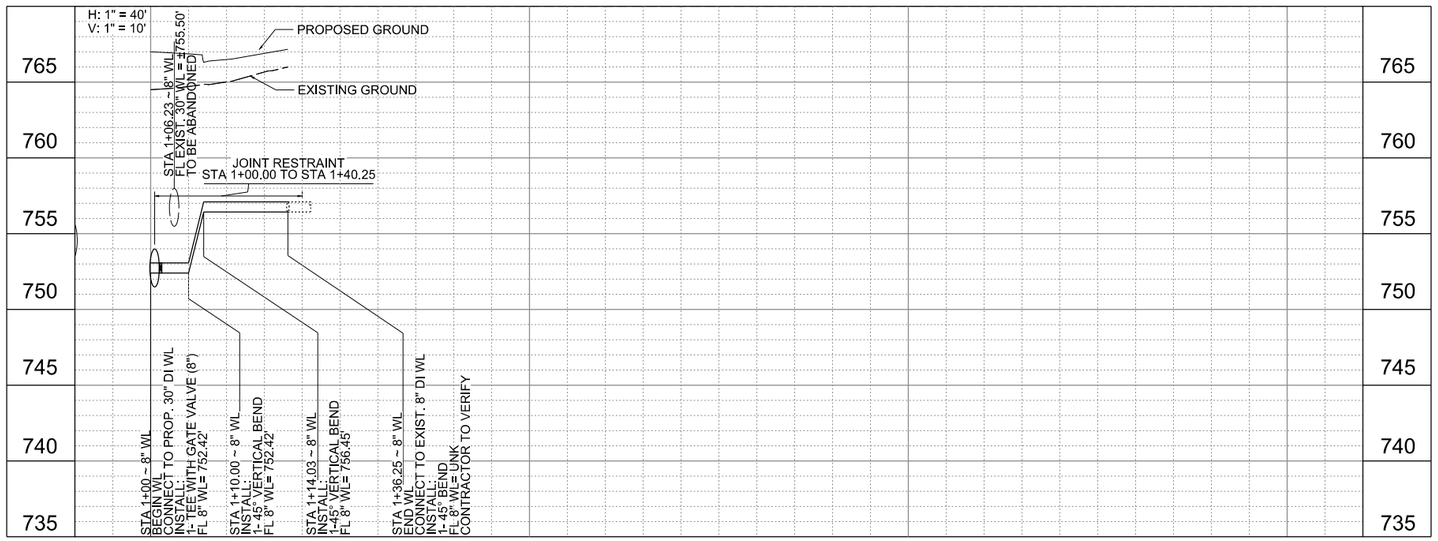

WYOMING SPRINGS
SEGMENT 1
ROUND ROCK, TX

ROUND ROCK TEXAS

halff
13620 BRANTWICK DR
BLDG C, STE 100
AUSTIN, TX 78729
(512) 777-4600
TBPELS FIRM #312

Revision No.	Date	Description

STATE OF TEXAS
NOAH S. SHAFFER
107722
LICENSED
PROFESSIONAL ENGINEER
4/13/23

100% SUBMITTAL

Project No.:	36179.002
Issued:	4/13/2023
Drawn By:	HW
Checked By:	NS
Scale:	-

Sheet Title
WATER
STANDARD DETAILS

449
Sheet Number

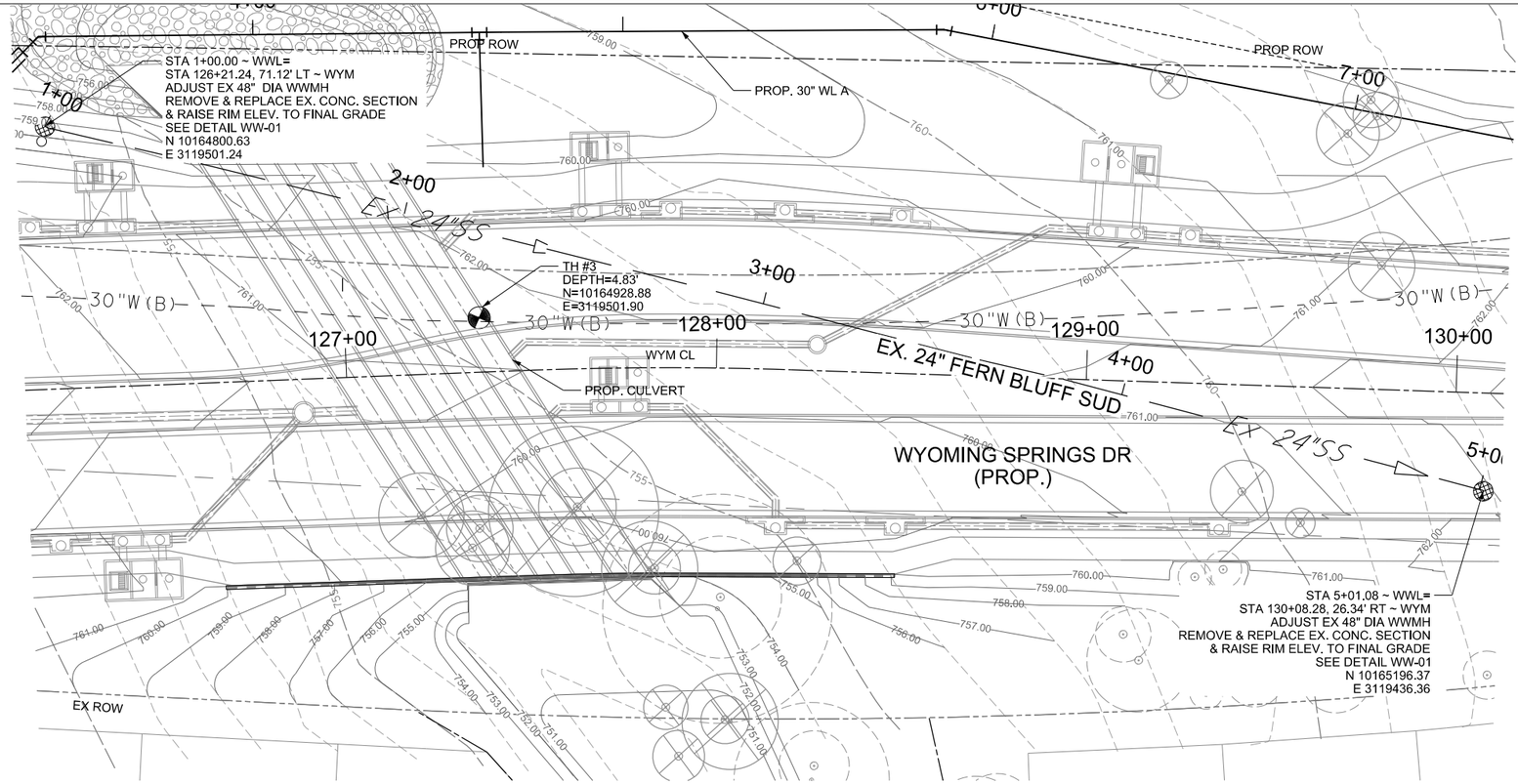

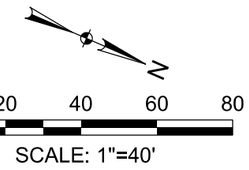

SCALE: 1"=40'

LEGEND

- EXIST. CONTOUR
- PROP. ROW
- EXIST ROW
- PROP. EASEMENT
- 1+00 PROP. WATER LINE
- Ex W EXIST. WATER LINE
- Ex SS EXIST. WASTEWATER LINE
- PROP. STORM DRAIN
- EXIST. WATER MANHOLE
- EXIST. WASTEWATER MANHOLE
- PROP. WATER VALVE
- FH EXIST. FIRE HYDRANT
- S.U.E QUALITY LEVEL A TEST HOLES

NOTES:

1. EXISTING FERN BLUFF SUD WW PIPE SLOPES AND MH INVERTS ARE BASED ON FIELD MEASUREMENTS.

2. ONLY THE LIMITS OF THE EXISTING WWL IN CONFLICT WITH PROPOSED GRADE CHANGES ARE SHOWN.

3. MODIFIED MANHOLES MUST BE LINED PER CITY OF ROUND ROCK SPECIFICATIONS.

4. THE ENTIRE INTERIOR OF ADJUSTED MANHOLES MUST BE COATED PER CITY OF ROUND ROCK SPECIFICATIONS.

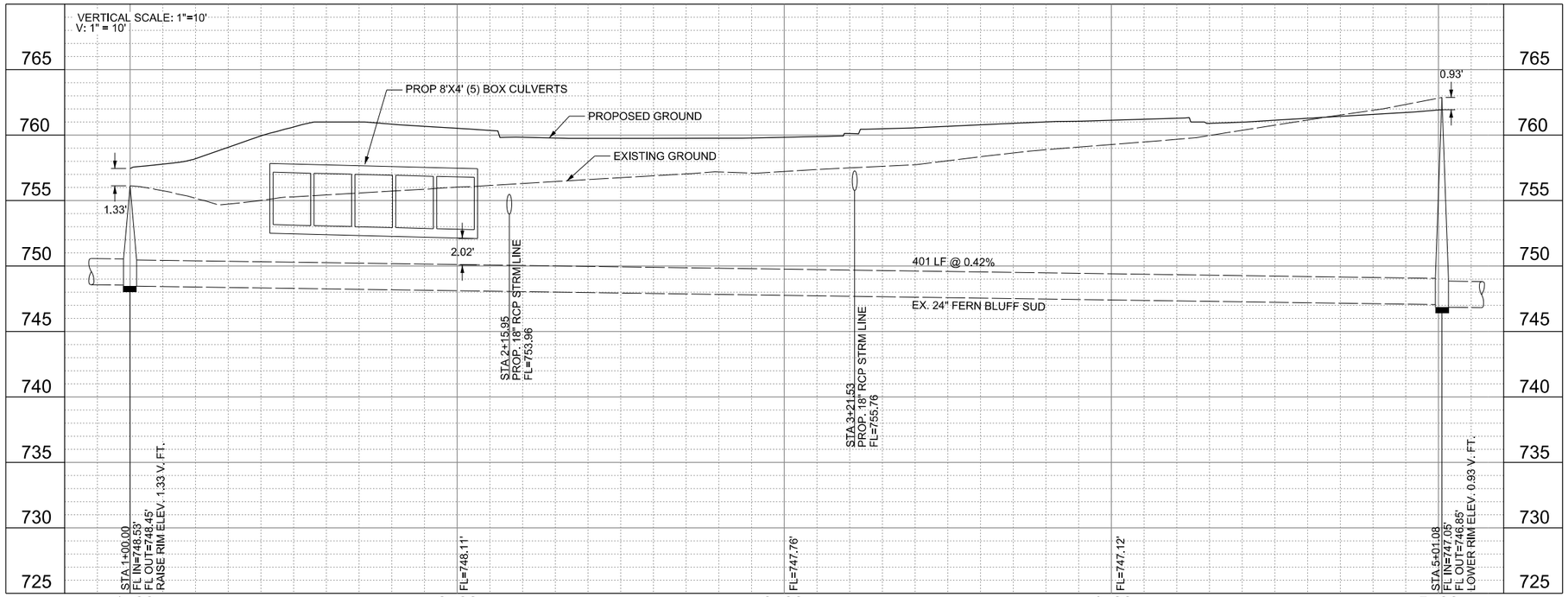

WYOMING SPRINGS
SEGMENT 1
ROUND ROCK, TX

ROUND ROCK TEXAS

halff
13620 BRANTWICK DR
BLDG C, STE 100
AUSTIN, TX 78729
(512) 777-4600
TBPELS FIRM #312

Revision No.	Date	Description

STATE OF TEXAS
NOAH S. SHAFFER
107722
LICENSED
PROFESSIONAL ENGINEER
4/13/23

100% SUBMITTAL

Project No.:	36179.002
Issued:	4/13/2023
Drawn By:	HW
Checked By:	NS
Scale:	1"=40

Sheet Title
WASTEWATER
PLAN AND PROFILE
(1 OF 5)

450
Sheet Number

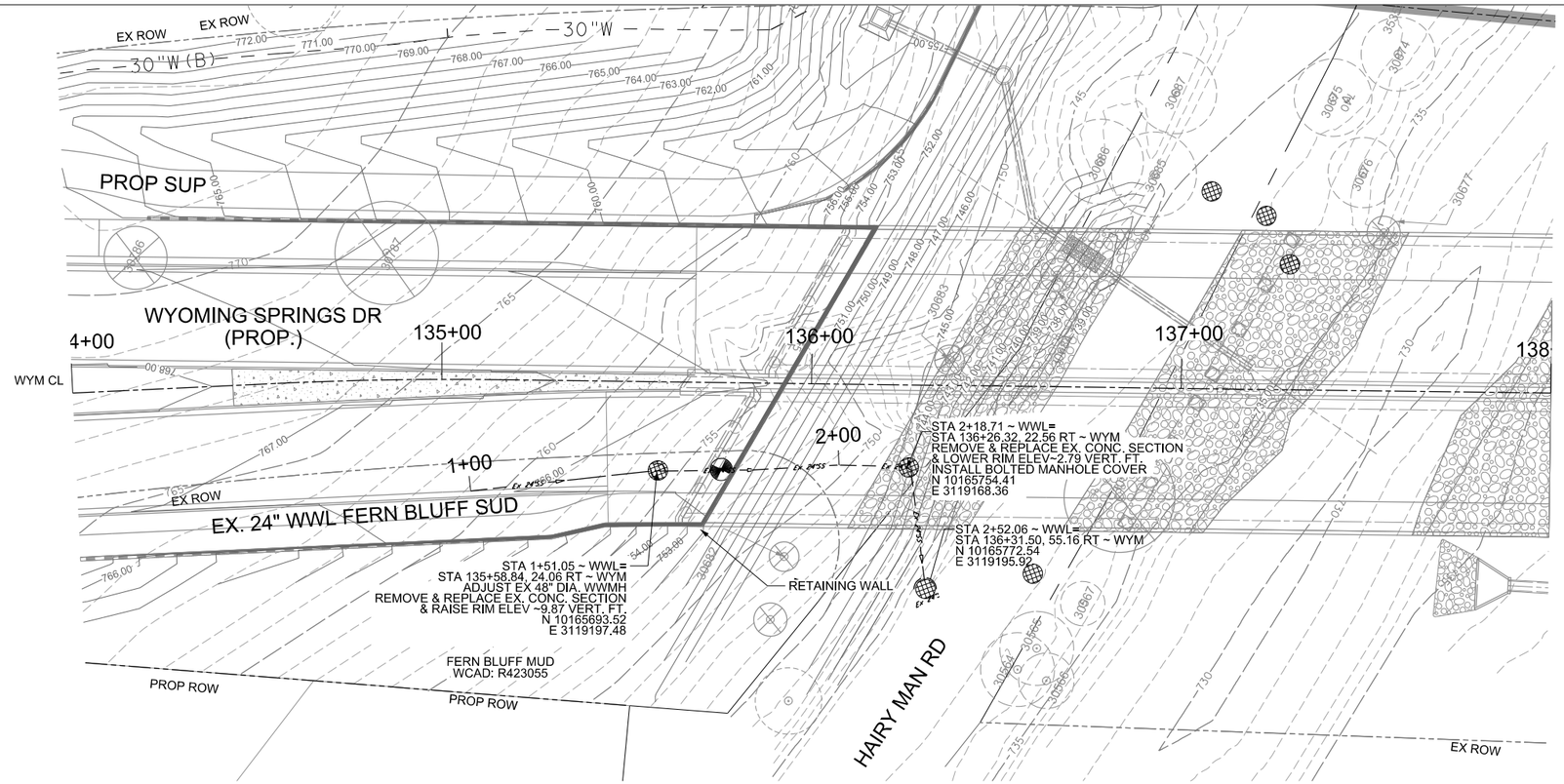

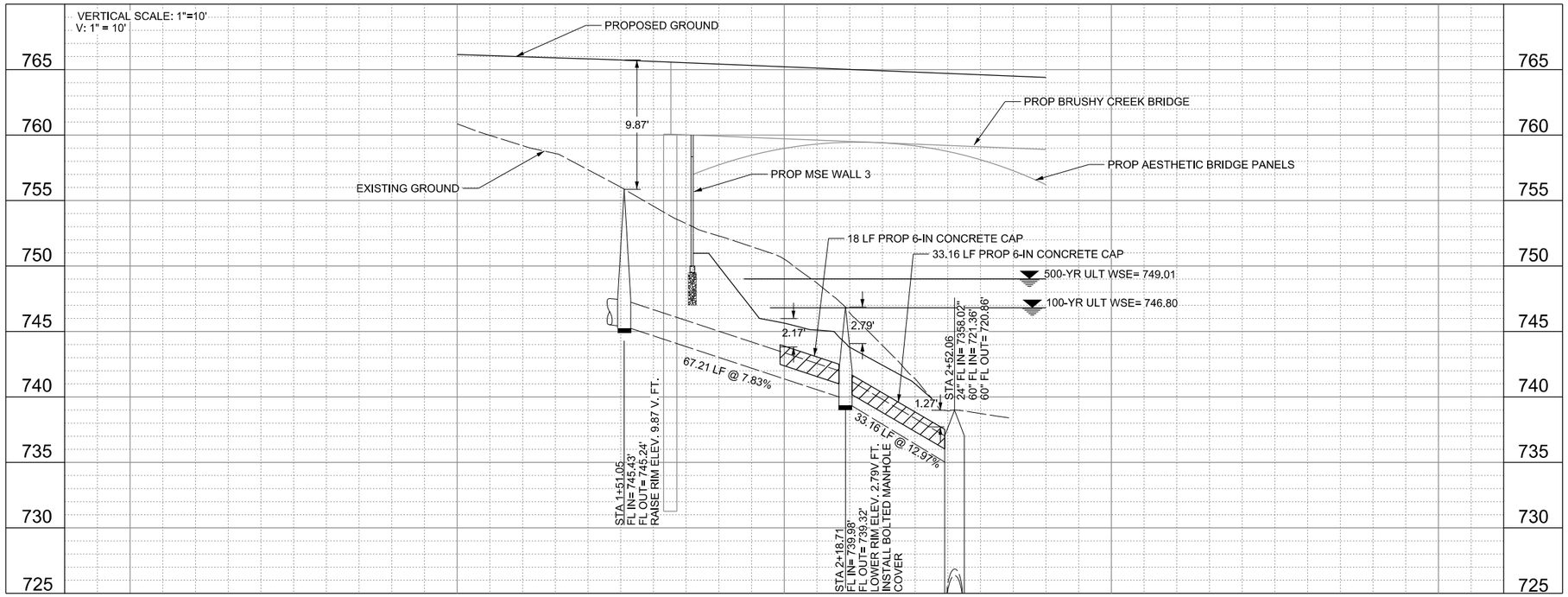

0 20 40 60 80

SCALE: 1"=40'

LEGEND

- EXIST. CONTOUR
- PROP. ROW
- EXIST ROW
- PROP. EASEMENT
- 1+00 PROP. WATER LINE
- Ex W EXIST. WATER LINE
- Ex SS EXIST. WASTEWATER LINE
- PROP. STORM DRAIN
- EXIST. WATER MANHOLE
- EXIST. WASTEWATER MANHOLE
- PROP. WATER VALVE
- FH EXIST. FIRE HYDRANT
- S.U.E QUALITY LEVEL A TEST HOLES

NOTES:

1. EXISTING FERN BLUFF SUD WW PIPE SLOPES AND MH INVERTS ARE BASED ON FIELD MEASUREMENTS.

2. ONLY THE LIMITS OF THE EXISTING WWL IN CONFLICT WITH PROPOSED GRADE CHANGES ARE SHOWN.

3. MODIFIED MANHOLES MUST BE LINED PER CITY OF ROUND ROCK SPECIFICATIONS.

4. THE ENTIRE INTERIOR OF ADJUSTED MANHOLES MUST BE COATED PER CITY OF ROUND ROCK SPECIFICATIONS.

WYOMING SPRINGS
SEGMENT 1
ROUND ROCK, TX

ROUND ROCK TEXAS

halff
13620 BRAKTWICK DR
BLDG C, STE 100
AUSTIN, TX 78729
(512) 777-4600
TBPELS FIRM #312

Revision No.	Date	Description

STATE OF TEXAS
NOAH S. SHAFFER
107722
LICENSED
PROFESSIONAL ENGINEER
4/13/23

100% SUBMITTAL

Project No.:	36179.002
Issued:	4/13/2023
Drawn By:	HW
Checked By:	NS
Scale:	1"=40

Sheet Title
WASTEWATER
PLAN AND PROFILE
(2 OF 5)

451
Sheet Number

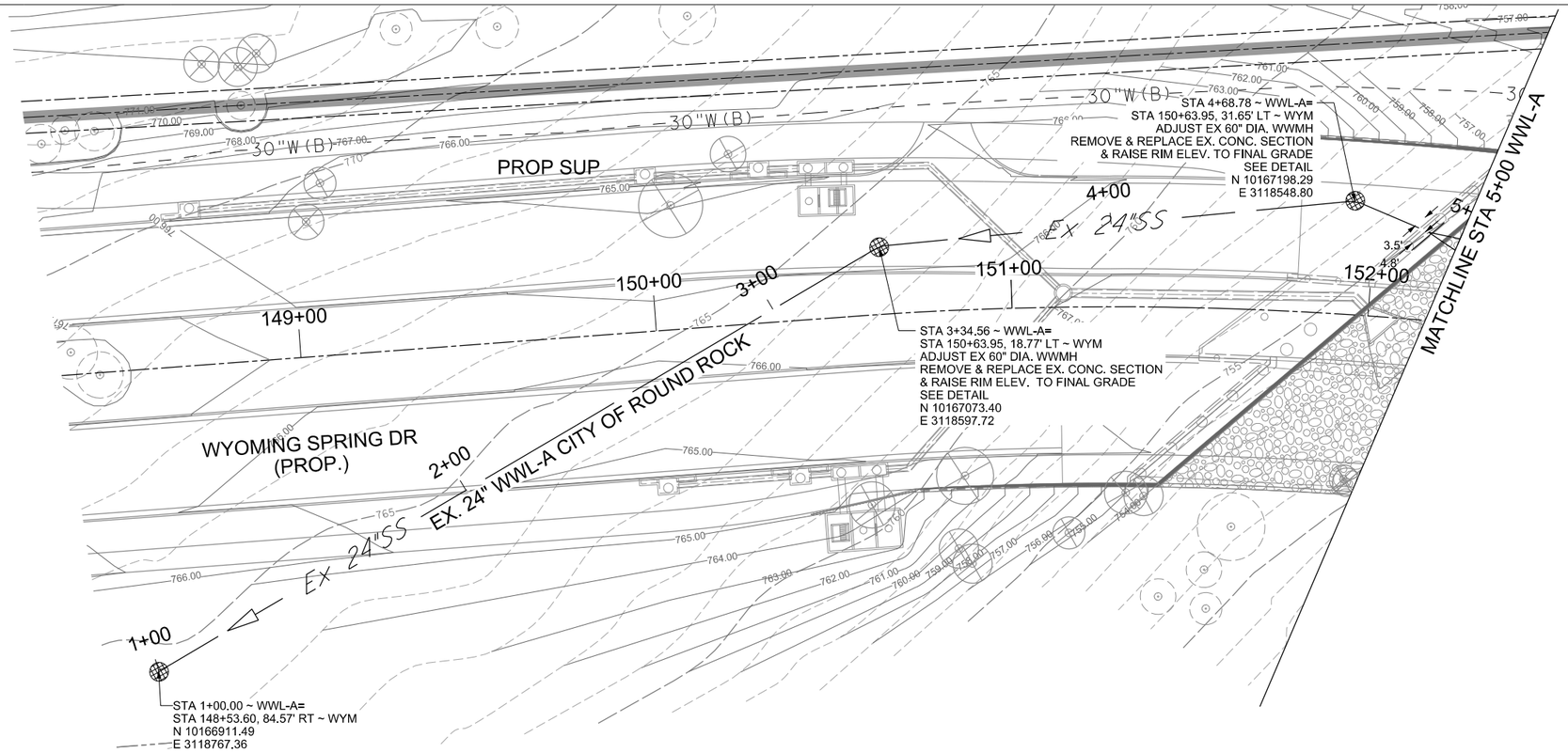

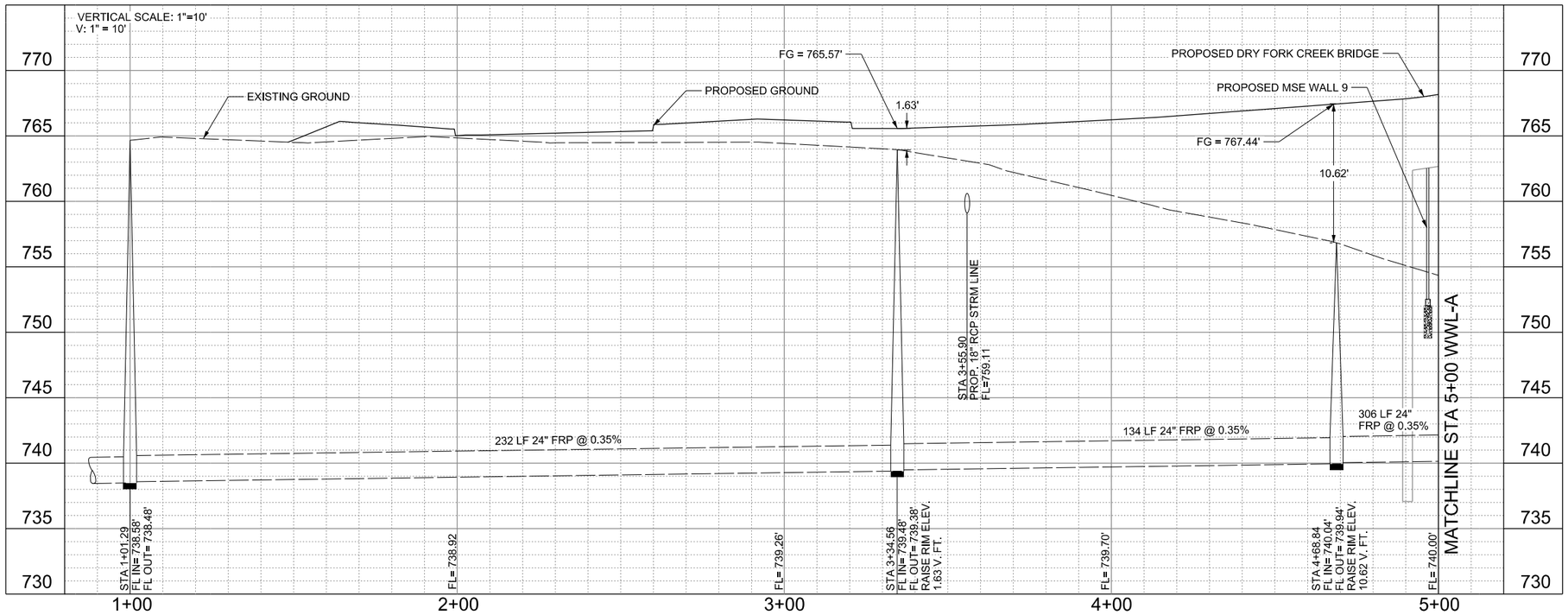



SCALE: 1"=40'

LEGEND

- EXIST. CONTOUR
- PROP. ROW
- EXIST ROW
- PROP. EASEMENT
- 1+00 PROP. WATER LINE
- Ex W EXIST. WATER LINE
- Ex SS EXIST. WASTEWATER LINE
- PROP. STORM DRAIN
- EXIST. WATER MANHOLE
- EXIST. WASTEWATER MANHOLE
- PROP. WATER VALVE
- FH EXIST. FIRE HYDRANT
- S.U.E QUALITY LEVEL A TEST HOLES

NOTES:

1. EXISTING CITY OF ROUND ROCK WW PIPE SLOPES AND MH INVERTS ARE BASED ON AS-BUILTS.

2. ONLY THE LIMITS OF THE EXISTING WWL IN CONFLICT WITH PROPOSED GRADE CHANGES ARE SHOWN.

3. MODIFIED MANHOLES MUST BE LINED PER CITY OF ROUND ROCK SPECIFICATIONS.

4. THE ENTIRE INTERIOR OF ADJUSTED MANHOLES MUST BE COATED PER CITY OF ROUND ROCK SPECIFICATIONS.

WYOMING SPRINGS
SEGMENT 1
ROUND ROCK, TX

ROUND ROCK TEXAS

halff
13620 BRANTWICK DR
BLDG C, STE 100
AUSTIN, TX 78729
(512) 777-4600
TBPELS FIRM #312

Revision No.	Date	Description

STATE OF TEXAS
NOAH S. SHAFFER
107722
LICENSED
PROFESSIONAL ENGINEER
4/13/23

100% SUBMITTAL

Project No.:	36179.002
Issued:	4/13/2023
Drawn By:	HW
Checked By:	NS
Scale:	1"=40

Sheet Title
WASTEWATER
PLAN AND PROFILE
(3 OF 5)

452
Sheet Number

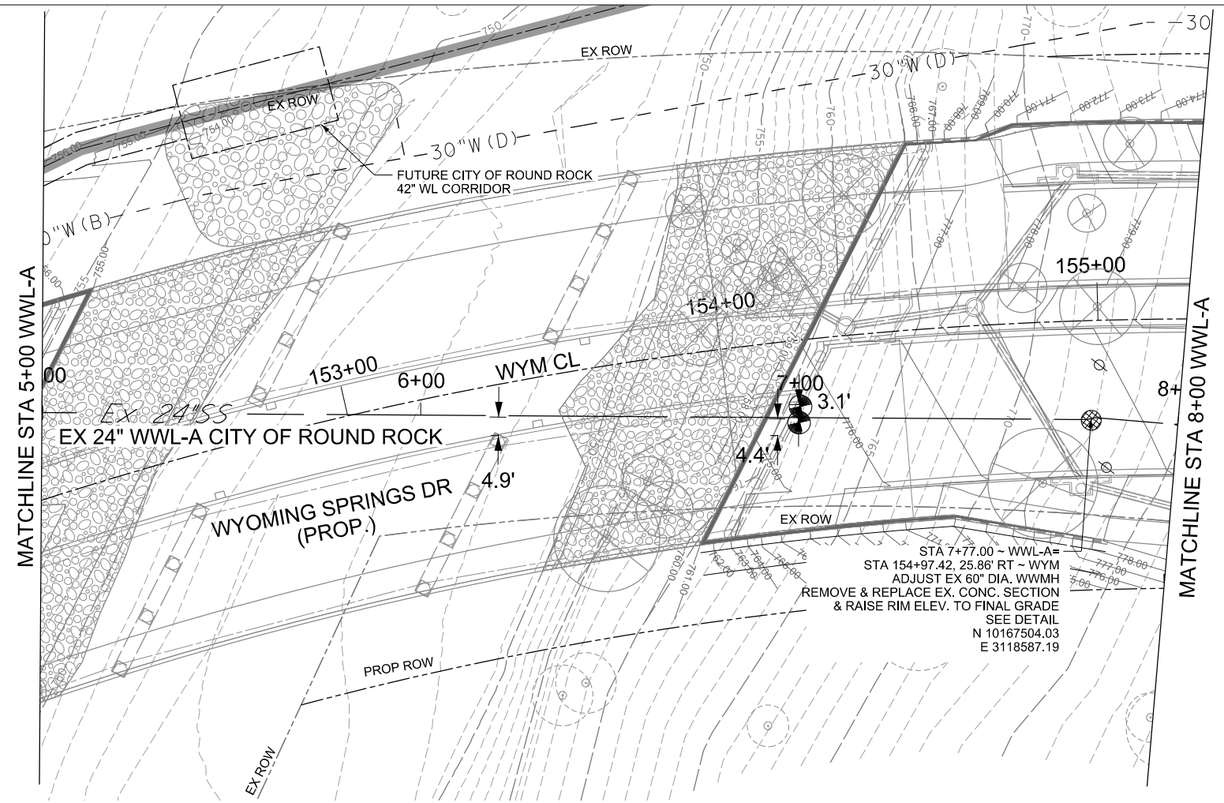

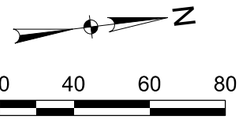

LEGEND

- EXIST. CONTOUR
- PROP. ROW
- EXIST ROW
- PROP. EASEMENT
- 1+00 PROP. WATER LINE
- Ex W EXIST. WATER LINE
- Ex SS EXIST. WASTEWATER LINE
- PROP. STORM DRAIN
- EXIST. WATER MANHOLE
- EXIST. WASTEWATER MANHOLE
- PROP. WATER VALVE
- FH EXIST. FIRE HYDRANT
- S.U.E QUALITY LEVEL A TEST HOLES

NOTES:

1. EXISTING CITY OF ROUND ROCK WW PIPE SLOPES AND MH INVERTS ARE BASED ON AS-BUILTS.

2. ONLY THE LIMITS OF THE EXISTING WWL IN CONFLICT WITH PROPOSED GRADE CHANGES ARE SHOWN.

3. MODIFIED MANHOLES MUST BE LINED PER CITY OF ROUND ROCK SPECIFICATIONS.

4. THE ENTIRE INTERIOR OF ADJUSTED MANHOLES MUST BE COATED PER CITY OF ROUND ROCK SPECIFICATIONS.

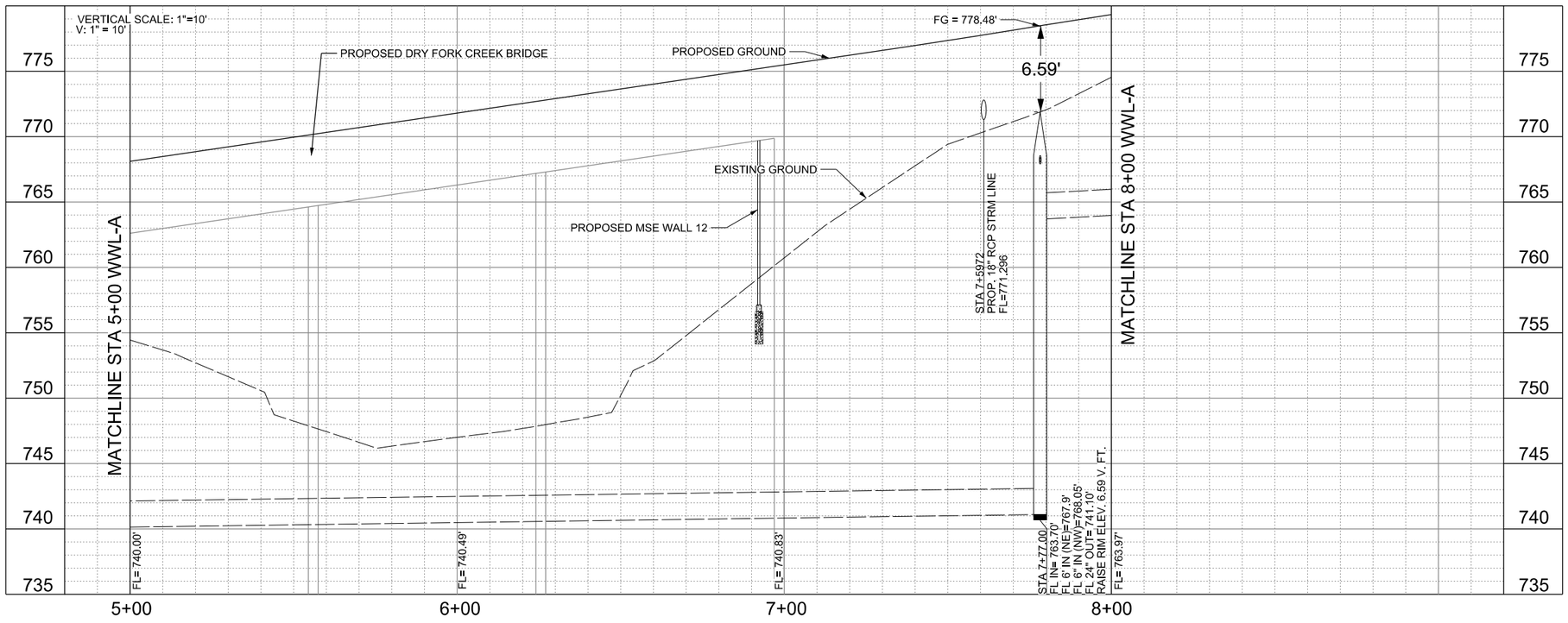

WYOMING SPRINGS
SEGMENT 1
ROUND ROCK, TX

ROUND ROCK TEXAS

halff
13620 BRANTWICK DR
BLDG C, STE 100
AUSTIN, TX 78729
(512) 777-4600
TBPELS FIRM #312

Revision No.	Date	Description

STATE OF TEXAS
NOAH S. SHAFFER
107722
LICENSED
PROFESSIONAL ENGINEER
4/13/23

100% SUBMITTAL

Project No.:	36179.002
Issued:	4/13/2023
Drawn By:	HW
Checked By:	NS
Scale:	1"=40

Sheet Title
WASTEWATER
PLAN AND PROFILE
(4 OF 5)

453
Sheet Number

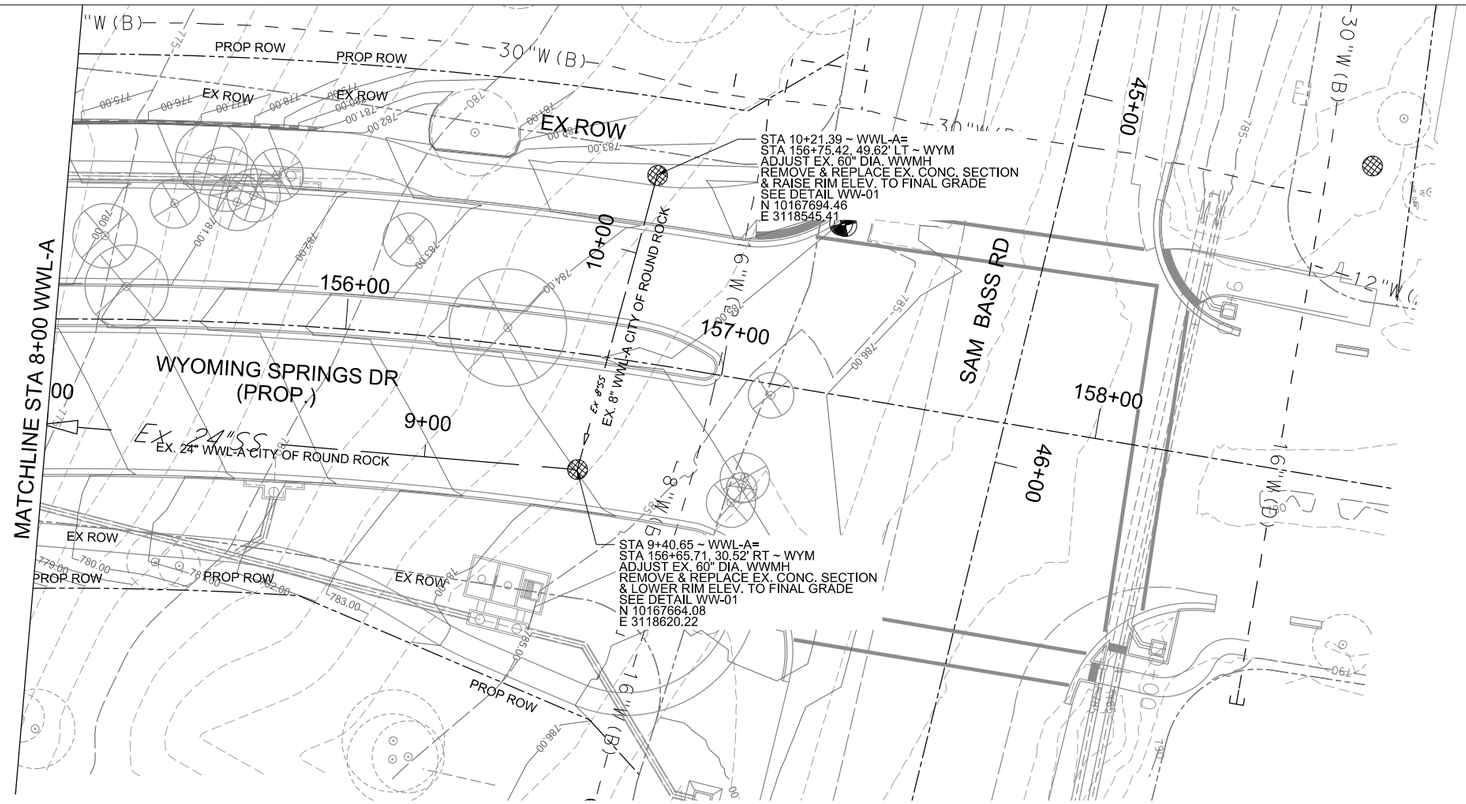

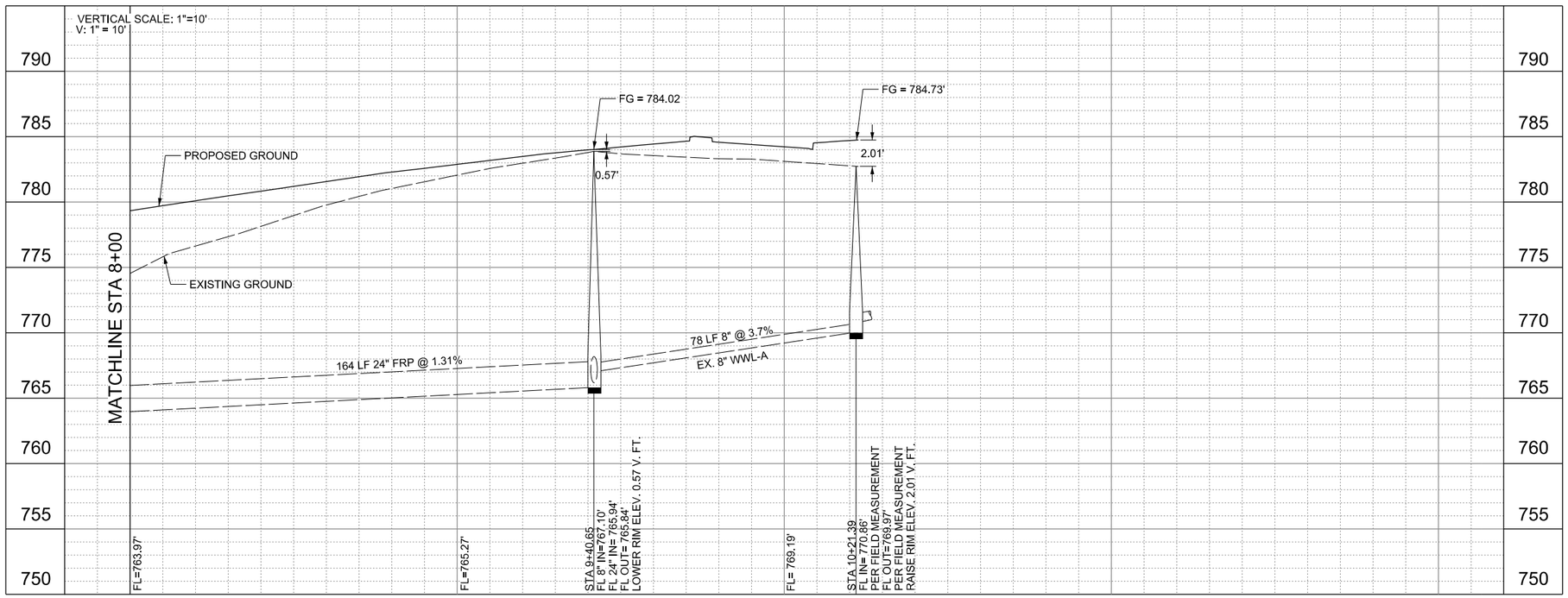

0 20 40 60 80

SCALE: 1"=40'

N

LEGEND

- EXIST. CONTOUR
- PROP. ROW
- EXIST ROW
- PROP. EASEMENT
- 1+00 PROP. WATER LINE
- Ex W EXIST. WATER LINE
- Ex SS EXIST. WASTEWATER LINE
- PROP. STORM DRAIN
- EXIST. WATER MANHOLE
- EXIST. WASTEWATER MANHOLE
- PROP. WATER VALVE
- FH EXIST. FIRE HYDRANT
- S.U.E QUALITY LEVEL A TEST HOLES

NOTES:

1. EXISTING CITY OF ROUND ROCK WW PIPE SLOPES AND MH INVERTS ARE BASED ON AS-BUILTS.
2. ONLY THE LIMITS OF THE EXISTING WWL IN CONFLICT WITH PROPOSED GRADE CHANGES ARE SHOWN.
3. MODIFIED MANHOLES MUST BE LINED PER CITY OF ROUND ROCK SPECIFICATIONS.
4. THE ENTIRE INTERIOR OF ADJUSTED MANHOLES MUST BE COATED PER CITY OF ROUND ROCK SPECIFICATIONS.

WYOMING SPRINGS
SEGMENT 1
ROUND ROCK, TX

ROUND ROCK TEXAS

halff
13620 BRANTWICK DR
BLDG C, STE 100
AUSTIN, TX 78729
(512) 777-4600
TBPELS FIRM #312

Revision No.	Date	Description

STATE OF TEXAS
NOAH S. SHAFFER
107722
LICENSED
PROFESSIONAL ENGINEER
4/13/23

100% SUBMITTAL

Project No.:	36179.002
Issued:	4/13/2023
Drawn By:	HW
Checked By:	NS
Scale:	1"=40

Sheet Title
WASTEWATER
PLAN AND PROFILE
(5 OF 5)

454
Sheet Number

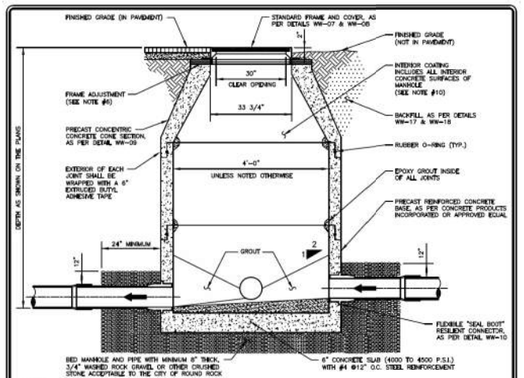

NOTES:

1. IF DROP IS SIX INCHES (6") TO TWO FEET (2'-0"), CONSTRUCTION OF DROP SHALL PROVIDE AN OVERSIZED INVERT TO EXTEND UNDER THE DROP CONNECTION.
2. SEE CONSTRUCTION PLANS FOR MANHOLE SIZE, LOCATION, CONFIGURATION, TYPE OF TOP SECTION, VENTING REQUIREMENTS, PIPE SIZES AND TYPES.
3. MANHOLES SHALL BE PRECAST A.S.T.M. C478 BELL AND SPIGOT WITH "O" RING JOINTS.
4. MANHOLES TO BE DESIGNED TO RESIST LATERAL AND VERTICAL SOIL FORCES RESULTING FROM MANHOLE DEPTH. ADDITIONALLY, MANHOLES LOCATED IN PAVEMENT TO BE DESIGNED FOR H20 TRAFFIC LOADING.
5. ALL MANHOLE COVERS SHALL BE BOLTED AND GASKETED, WHEN MANHOLES ARE LOCATED OUTSIDE OF PAVEMENT.
6. FRAME ADJUSTMENT HEIGHT SHALL CONSIST OF FIVE INCHES (5") MINIMUM TO EIGHTEEN INCHES (18") MAXIMUM. CONCRETE SHALL BE CONSTRUCTED INSIDE MANHOLE TO DIRECT INFLUENT INTO THE FLOW STREAM. ALL P.V.C. PIPE SHALL BE REMOVED FROM INVERT.
7. BASE SECTION SHALL BE DESIGNED FOR H20 LOADING, PLUS EARTH LOAD AT 130 PCF.
8. ENTIRE INTERIOR CONCRETE SURFACES OF WASTEWATER MANHOLES TO BE COATED WITH RAVEN 405, SPRAYWALL, OR APPROVED EQUAL, (WITH A UNIFORM THICKNESS OF 124 MILS AND A MINIMUM THICKNESS OF 100 MILS, APPLIED AFTER MANHOLE HAS PASSED THE VACUUM TEST). FOR REHABILITATING MANHOLES 1/2" MINIMUM THICKNESS CALCIUM ALUMINATE CEMENTITIOUS COATING AND OTHER INTERIOR SURFACES MAY BE COATED IF RECOMMENDED BY COATING MANUFACTURER. (IN LIEU OF INTERIOR COATINGS NEW PRECAST MANHOLES CONTAINING CONSHIELD WILL BE ACCEPTED PROVIDING THE MANUFACTURER STENCILS "CONSHIELD" ON THE INSIDE AND OUTSIDE OF ALL MANHOLE SECTIONS.)

RECORD SIGNED COPY ON FILE AT UAWS DEPARTMENT	CITY OF ROUND ROCK	DRAWING NO:
APPROVED 03-01-18 DATE	PRECAST CONCRETE WASTEWATER MANHOLE DETAIL	WW-01
THE ARCHITECT/ENGINEER ASSUMES RESPONSIBILITY FOR THE APPROPRIATE USE OF THIS DETAIL. (NOT TO SCALE)		ROUND ROCK TEXAS

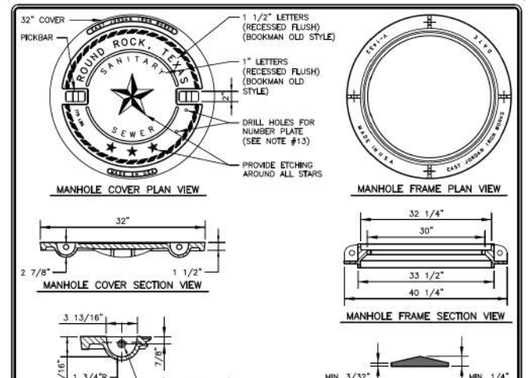

NOTES:

1. COVER AND FRAME SHALL COMPLY WITH STANDARD SPECIFICATIONS FOR DRAINAGE, SEWER, UTILITY AND RELATED CASTINGS: AASHTO DESIGNATION M306–04.
2. MANHOLE COVER SHALL BE MODEL NUMBER: V–1432–3 (PRODUCT NUMBER: 41432059), AS MANUFACTURED BY EAST JORDAN IRON WORKS INCORPORATED, OR APPROVED EQUAL.
3. MANHOLE FRAME SHALL BE MODEL NUMBER: V–1432 (PRODUCT NUMBER: 41432010), AS MANUFACTURED BY EAST JORDAN IRON WORKS INCORPORATED, OR APPROVED EQUAL.
4. MANHOLE COVER AND FRAME ASSEMBLY, IF ORDERED AS A SET, SHALL BE MODEL NUMBER: V–1432 (PRODUCT NUMBER: 41432089), AS MANUFACTURED BY EAST JORDAN IRON WORKS INCORPORATED, OR APPROVED EQUAL.
5. ALL CORNERS AND EDGES SHALL HAVE A 1/16" MINIMUM AND 1/8" MAXIMUM RADIUS.
6. MANHOLE COVERS SHALL BE CAST WITH TWO 1" DIAMETER STEEL PICKBARS.
7. MANHOLE COVER WEIGHT SHALL BE 175 LBS. FOR DUCTILE IRON. WEIGHT SHALL BE CAST ON BOTH TOP AND BOTTOM OF COVER.
8. MANUFACTURER SHALL CERTIFY THAT EACH MANHOLE COVER MEETS HS–20 LOADING.
9. FILLETS SHALL BE 1/4" RADIUS UNLESS OTHERWISE SPECIFIED.
10. MANUFACTURER SHALL REMOVE EXCESS IRON AND MACHINE FINISH SEATING SURFACES TO NOTED DIMENSIONS.
11. COVER SHALL BE DIPPED IN A WATER–BASED ASPHALTIC COATING, PRIOR TO SHIPMENT FROM FOUNDRY.
12. MANUFACTURER SHALL DRILL 2–3/16" X 1/2" DEEP HOLES FOR A MANHOLE NUMBER PLATE TO BE PROVIDED BY THE CITY OF ROUND ROCK. THE TOP HOLE SHALL BE DRILLED 1" O.C. FROM THE BOTTOM OF THE PICKBAR AND THE BOTTOM HOLE SHALL BE DRILLED 4" O.C. FROM THE TOP HOLE.

RECORD SIGNED COPY ON FILE AT UAWS DEPARTMENT	CITY OF ROUND ROCK	DRAWING NO:
APPROVED 03-01-18 DATE	NON–BOLTED WASTEWATER MANHOLE COVER AND FRAME DETAIL	WW-08
THE ARCHITECT/ENGINEER ASSUMES RESPONSIBILITY FOR THE APPROPRIATE USE OF THIS DETAIL. (NOT TO SCALE)		ROUND ROCK TEXAS

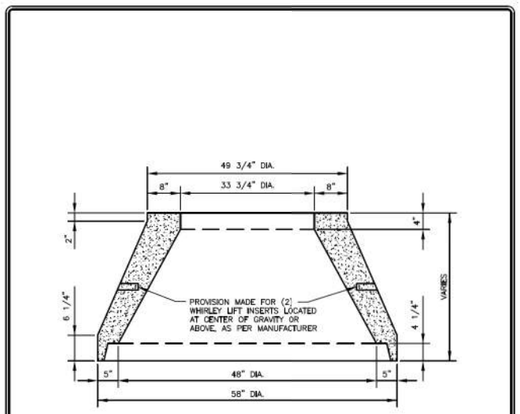

NOTE:

CONCENTRIC CONCRETE CONE SECTION SHALL BE MANUFACTURED USING 4000 TO 4500 P.S.I. CONCRETE, 28 DAY STRENGTH AND IN ACCORDANCE WITH A.S.T.M. C478, AS MANUFACTURED BY CONCRETE PRODUCTS INCORPORATED, OR APPROVED EQUAL.

RECORD SIGNED COPY ON FILE AT UAWS DEPARTMENT	CITY OF ROUND ROCK	DRAWING NO:
APPROVED 03-01-18 DATE	PRECAST 48" CONCENTRIC CONCRETE CONE SECTION DETAIL	WW-09
THE ARCHITECT/ENGINEER ASSUMES RESPONSIBILITY FOR THE APPROPRIATE USE OF THIS DETAIL. (NOT TO SCALE)		ROUND ROCK TEXAS

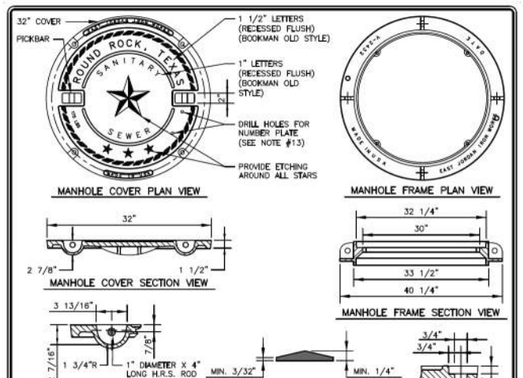

NOTES:

1. COVER AND FRAME SHALL COMPLY WITH STANDARD SPECIFICATIONS FOR DRAINAGE, SEWER, UTILITY AND RELATED CASTINGS: AASHTO DESIGNATION M306–04.
2. MANHOLE COVER SHALL BE MODEL NUMBER: V–2432–3 (PRODUCT NUMBER: 42432033), AS MANUFACTURED BY EAST JORDAN IRON WORKS INCORPORATED, OR APPROVED EQUAL.
3. MANHOLE FRAME SHALL BE MODEL NUMBER: V–2432 (PRODUCT NUMBER: 42432010), AS MANUFACTURED BY EAST JORDAN IRON WORKS INCORPORATED, OR APPROVED EQUAL.
4. MANHOLE COVER AND FRAME ASSEMBLY, IF ORDERED AS A SET, SHALL BE MODEL NUMBER: V–2432 (PRODUCT NUMBER: 42432073), AS MANUFACTURED BY EAST JORDAN IRON WORKS INCORPORATED, OR APPROVED EQUAL.
5. ALL CORNERS AND EDGES SHALL HAVE A 1/16" MINIMUM AND 1/8" MAXIMUM RADIUS.
6. MANHOLE COVERS SHALL BE CAST WITH TWO 1" DIAMETER STEEL PICKBARS.
7. MANHOLE COVER WEIGHT SHALL BE 175 LBS. FOR DUCTILE IRON. WEIGHT SHALL BE CAST ON BOTH TOP AND BOTTOM OF COVER.
8. MANUFACTURER SHALL CERTIFY THAT EACH MANHOLE COVER MEETS HS–20 LOADING.
9. FILLETS SHALL BE 1/4" RADIUS UNLESS OTHERWISE SPECIFIED.
10. MANUFACTURER SHALL REMOVE EXCESS IRON AND MACHINE FINISH SEATING SURFACES TO NOTED DIMENSIONS.
11. COVER SHALL BE DIPPED IN A WATER–BASED ASPHALTIC COATING, PRIOR TO SHIPMENT FROM FOUNDRY.
12. BOLTS SHALL BE 5/8"–11NC X 2" LONG HEX STAINLESS STEEL WITH WASHER.
13. MANUFACTURER SHALL DRILL 2–3/16" X 1/2" DEEP HOLES FOR A MANHOLE NUMBER PLATE TO BE PROVIDED BY THE CITY OF ROUND ROCK. THE TOP HOLE SHALL BE DRILLED 1" O.C. FROM THE BOTTOM OF THE PICKBAR AND THE BOTTOM HOLE SHALL BE DRILLED 4" O.C. FROM THE TOP HOLE.

RECORD SIGNED COPY ON FILE AT UAWS DEPARTMENT	CITY OF ROUND ROCK	DRAWING NO:
APPROVED 03-01-18 DATE	BOLTED WASTEWATER MANHOLE COVER AND FRAME DETAIL	WW-07
THE ARCHITECT/ENGINEER ASSUMES RESPONSIBILITY FOR THE APPROPRIATE USE OF THIS DETAIL. (NOT TO SCALE)		ROUND ROCK TEXAS

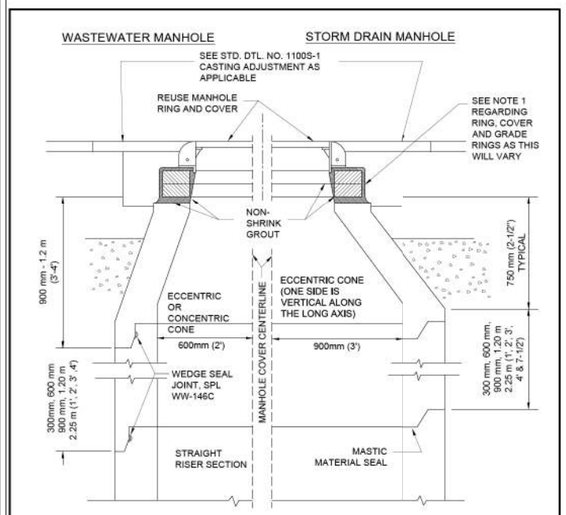

1. SEE "MINOR MANHOLE HEIGHT ADJUSTMENT" STANDARDS 506S-4 AND 506S-4A FOR ADDITIONAL INFORMATION.
2. MANHOLE SECTIONS TEMPORARILY REMOVED FOR ROADWAY CONSTRUCTION MAY BE REUSED ONLY WITH WRITTEN APPROVAL OF THE INSPECTOR. WEDGE SEALS SHALL NOT BE REUSED.
3. ANY COMBINATION OF REMOVING THE GRADE RINGS, AND/OR THE MANHOLE CONE, AND/OR THE STRAIGHT RISER SECTION OF THE MANHOLE SHALL BE ACCEPTABLE TO TEMPORARILY LOWER THE MANHOLE GRADE FOR RECONSTRUCTION.
4. WHILE THE MANHOLE IS TEMPORARILY LOWERED, A SHEET OF STEEL SUITABLE TO SUPPORT ALL IMPOSED LOADS SHALL BE USED TO COVER THE OPENING. STEEL SHALL BE PLACED SO THE SHEET WILL NOT MOVE UNDER ANY & ALL TRAFFIC CONDITIONS.
5. SUB-GRADE AND BASE MATERIALS SHALL BE COMPACTED TO 95% AND 100% DENSITIES, RESPECTIVELY, COMPACTION SHALL BE BY MECHANICAL TAMPING TO THE DENSITIES SPECIFIED, SEE STD. DTL. NO .1100S-1.

CITY OF AUSTIN AUSTIN WATER UTILITY	MAJOR MANHOLE ADJUSTMENT	
RECORD COPY SIGNED BY KATHI L FLOWERS 08/31/2011 ADOPTED	THE ENGINEER/ARCHITECT ASSUMES RESPONSIBILITY FOR APPROPRIATE USE OF THIS STANDARD. MODIFICATIONS TO THIS STANDARD ARE PROHIBITED.	STANDARD NO. 506S-2 1 OF 1

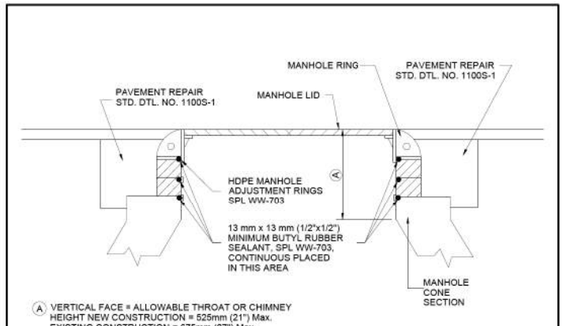

(A) VERTICAL FACE = ALLOWABLE THROAT OR CHIMNEY HEIGHT NEW CONSTRUCTION = 525mm (21") Max. EXISTING CONSTRUCTION = 675mm (27") Max.

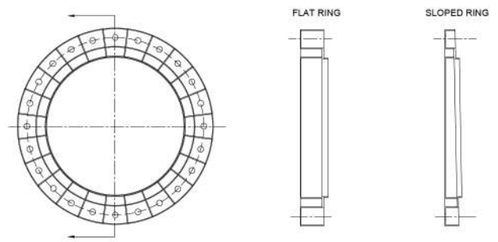

NOTE:

1. HDPE RINGS ONLY IN PAVED AREAS

CITY OF AUSTIN AUSTIN WATER UTILITY	MINOR MANHOLE HEIGHT ADJUSTMENT (HDPE RINGS)	
RECORD COPY SIGNED BY KATHI L FLOWERS 08/31/2011 ADOPTED	THE ENGINEER/ARCHITECT ASSUMES RESPONSIBILITY FOR APPROPRIATE USE OF THIS STANDARD. MODIFICATIONS TO THIS STANDARD ARE PROHIBITED.	STANDARD NO. 506S-4A 1 OF 3

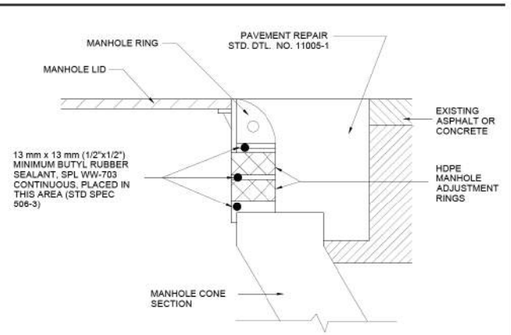

CITY OF AUSTIN AUSTIN WATER UTILITY	MINOR MANHOLE HEIGHT ADJUSTMENT (HDPE RINGS)	
RECORD COPY SIGNED BY KATHI L FLOWERS 08/31/2011 ADOPTED	THE ENGINEER/ARCHITECT ASSUMES RESPONSIBILITY FOR APPROPRIATE USE OF THIS STANDARD. MODIFICATIONS TO THIS STANDARD ARE PROHIBITED.	STANDARD NO. 506S-4A 2 OF 3

INSTALLATION INSTRUCTIONS
HDPE MANHOLE ADJUSTMENT RINGS
(FOR NEW CONSTRUCTION AND REHABILITATION)

1. REMOVE EXISTING CASTING AND RINGS OR COVER PLATE TO EXPOSE CONCRETE. MANHOLE SURFACE MUST BE CLEAN AND LEVEL ±6 mm (1/4"). NOTE: IF TOP OF CONCRETE STRUCTURE IS IN VERY POOR CONDITION OR IRREGULAR, THE FIRST RING CAN BE PRESSED FULLY INTO A HEAVY BED OF MORTAR ALLOWING IT AND SUBSEQUENT RINGS TO BE POSITIONED WITHOUT WOBBLE OR POINT-LOADING.
2. POSITION STRAIGHT AND LEVEL TO DETERMINE HEIGHT ADJUSTMENT REQUIRED. CONFIRM BEFORE PLACING RINGS.
3. COMBINE VARIOUS RING HEIGHTS, IN BOTH FLAT AND SLOPE, TO REACH DESIRED ADJUSTMENT. PLACE RINGS WITH INNER POCKET OPENING UP (OUTER POCKET OPENING WITH HOLES DOWN). THE INTERLOCKING LIP (MALE TONGUE) EXTENDS DOWN INTO THE STRUCTURE OF LOWER RING. MULTIPLE SLOPE RINGS CAN BE ADDED AND ROTATED TO ACHIEVE DESIRED GRADE MATCH WITHIN 6 mm (1/4"). NOTE: SLOPE RINGS ARE TAPERED TO PROVIDE 2% GRADE COMPENSATION. IF REQUIRED. HDPE SHIMS (MAX. 6 mm (1/2") PER RING MAY BE USED TO MATCH GRADE EXACTLY.
4. DRY STACK RINGS WITHOUT SEALANT TO ACHIEVE DESIRED VERTICAL AND SLOPE ADJUSTMENT. IF SLOPE RINGS ARE USED, MARK INNER FACE OF STOCK WITH PAINT OR MARKER TO MAINTAIN ALIGNMENT WHEN RE-STACKING.
5. REMOVE THE RINGS AND PLACE NEARBY IN UPSIDE-DOWN ORDER (THIS ALLOWS FOR EASY RE-ASSEMBLY IN THE CORRECT ORDER). APPLY A CONTINUOUS BEAD OF APPROVED RUBBER BUTYL SEALANT (SPL WW-703) TO THE FLAT SURFACE OF THE FIRST RING ON THE SIDE OF THE MALE TONGUE THAT WILL REST AGAINST THE CONE OPENING (MALE TONGUE DOWN). APPLY SEALANT TO AFFECT A SEAL BETWEEN THE INTERLOCKING LIP AND THE CONCRETE SURFACE IT RESTS ON.
6. APPLY 13 mm (1/2") CONTINUOUS BEAD OF APPROVED BUTYL RUBBER SEALANT (SPL WW-703) TO THE NEXT RING. THE SEALANT MUST BE APPLIED DIRECTLY INTO THE INTERLOCKING LIP (MALE TONGUE) AND THE BOTTOM OF THE RING, FAVORING THE SIDE OF THE LIP TO ASSURE A SEAL. PLACE THIS RING WITH THE INTERLOCKING LIP (MALE TONGUE) FACING DOWN ON TOP OF THE LOWER RING PREVIOUSLY INSTALLED. PRESS THE RING IN PLACE TO SET AND DISPERSE SEALANT. REMEMBER TO RE-ASSEMBLE THE RINGS USING ALIGNMENT MARKS TO POSITION SLOPE RING(S) CORRECTLY.
7. REPEAT #6 ON ALL PRE-ASSEMBLED RINGS TO REACH DESIRED HEIGHT AND SLOPE ADJUSTMENT.
8. APPLY 13 mm (1/2") CONTINUOUS BEAD OF APPROVED BUTYL RUBBER SEALANT (SPL WW-703), TO THE TOP OF THE UPPER RING.
9. POSITION CASTING ON RING(S). PRESS THE CASTING FRAME IN PLACE TO SET AND DISPERSE SEALANT.
10. BACKFILL TO RESTORE TO STD. DETAIL 1100S-1.
11. RING MANUFACTURER MUST BE LISTED ON SPL WW-703.
12. FOR USE IN PAVED AREAS ONLY.

CITY OF AUSTIN AUSTIN WATER UTILITY	MINOR MANHOLE HEIGHT ADJUSTMENT (HDPE RINGS)	
RECORD COPY SIGNED BY KATHI L FLOWERS 08/31/2011 ADOPTED	THE ENGINEER/ARCHITECT ASSUMES RESPONSIBILITY FOR APPROPRIATE USE OF THIS STANDARD. MODIFICATIONS TO THIS STANDARD ARE PROHIBITED.	STANDARD NO. 506S-4A 3 OF 3

WYOMING SPRINGS
SEGMENT 1
ROUND ROCK, TX

ROUND ROCK TEXAS

halff
13620 BRIARWICK DR
BLDG C, STE 100
AUSTIN, TX 78729
(512) 777-4600
TBPELS FIRM #312

Revision No.	Date	Description

STATE OF TEXAS
NOAH S. SHAFFER
107722
LICENSED
PROFESSIONAL ENGINEER
4/13/23

100% SUBMITTAL

Project No.:	36179.002
Issued:	4/13/2023
Drawn By:	HW
Checked By:	NS
Scale:	

Sheet Title
WASTEWATER STANDARD DETAILS

455
Sheet Number

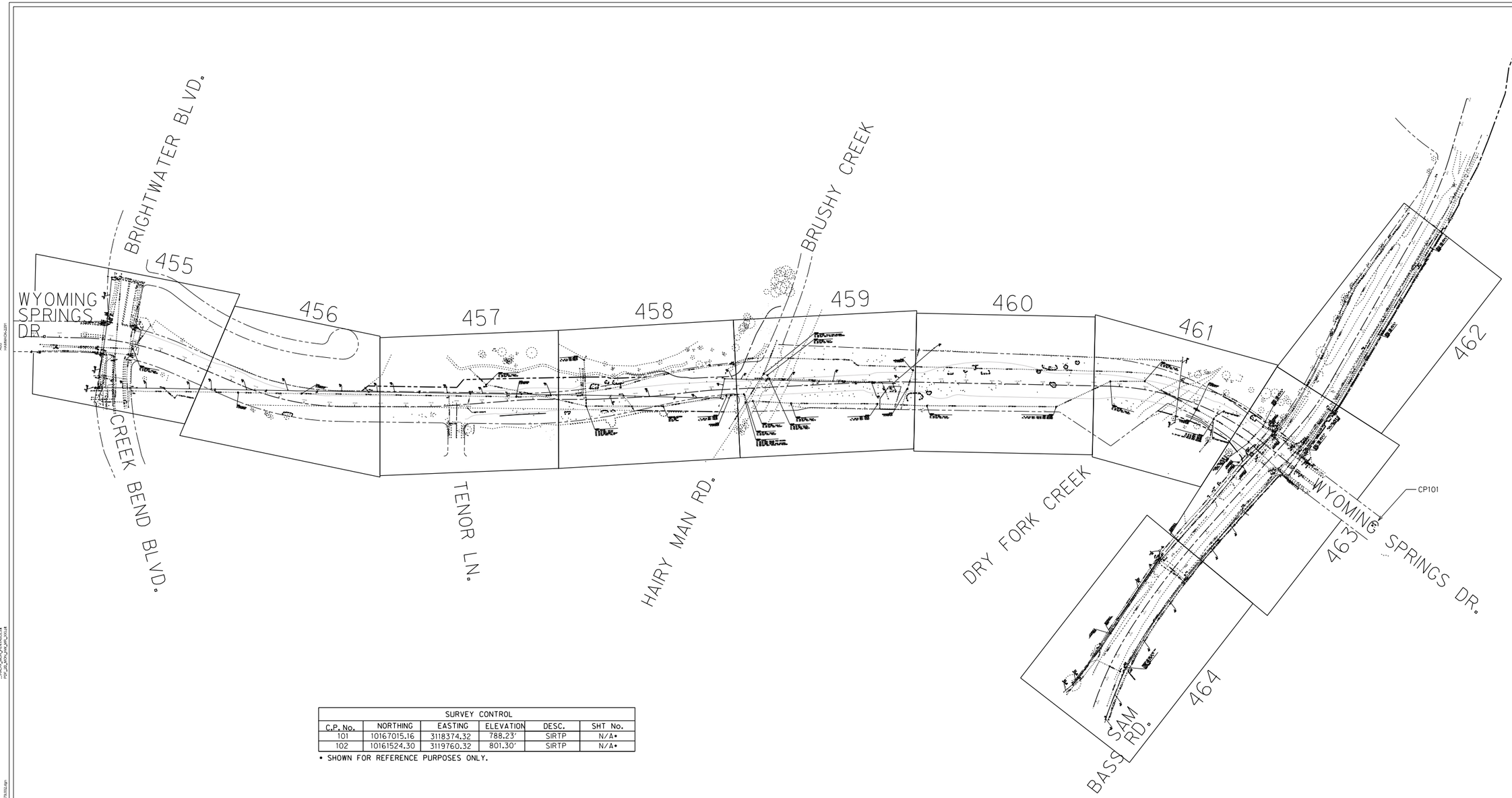

SURVEY CONTROL					
C.P. No.	NORTHING	EASTING	ELEVATION	DESC.	SHT No.
101	10167015.16	3118374.32	788.23'	SIRTP	N/A*
102	10161524.30	3119760.32	801.30'	SIRTP	N/A*

* SHOWN FOR REFERENCE PURPOSES ONLY.

LEGEND:

LEVEL "A"	LEVEL "B"	LEVEL "C" & "D"	
			TEST HOLE
	-T(B)-	-T(D)-	TELEPHONE LINE
	-FOC(B)-	-FOC(D)-	FIBER OPTIC LINE
	-C(B)-	-C(D)-	CABLE TV LINE
	-W(B)-	-W(D)-	WATER LINE
	-WW(B)-	-WW(D)-	WASTEWATER LINE
	-G(B)-	-G(D)-	GAS LINE
	-E(B)-	-E(D)-	ELECTRIC LINE
			OVERHEAD UTILITY LINE
	-(UNK.)-	-(UNK.)-	UNKNOWN LINE
TPED	TELEPHONE PEDESTAL	PP	POWER POLE
FHH	FIBER OPTIC HAND HOLE	PP/R	POWER POLE W/RISER
FMH	FIBER OPTIC MANHOLE	CWP	CROSSWALK POLE
FH	FIRE HYDRANT	EB	ELECTRIC BOX
WV	WATER VALVE	LP	LIGHT POLE
WMO	WATER METER	TSP	TRAFFIC SIGNAL POLE
WMH	WATER MANHOLE	TCB	TRAFFIC CONTROL BOX
WVLT	WATER VAULT		GUY WIRE
ARV	AIR RELEASE VALVE		UTILITY CONTINUATION
WVP	WATER VENT PIPE		UTILITY END POINT
WWMH	WASTEWATER MANHOLE	ABN.	ABANDONED UTILITY
CO	WASTEWATER CLEAN OUT	OH	OVERHEAD UTILITIES
WWVP	WASTEWATER VENT PIPE	CP	CONTROL POINT
GTS	GAS TEST STATION		

OWNERSHIP LEGEND:	OWNER:	CONTACT:	PHONE:
TELEPHONE(T)	= AT&T	HUGO VASQUEZ	512-870-4943
FIBER OPTIC CABLE(FOC)	= AT&T	HUGO VASQUEZ	512-870-4943
FIBER OPTIC CABLE(FOC1)	= MCI	DOUG KOUGL	214-732-5311
FIBER OPTIC CABLE(FOC2)	= ROUND ROCK ISD	MARK GABEHART	512-464-5166
FIBER OPTIC CABLE(FOC3)	= GRANDE COMMUNICATIONS	DANIEL PINA	737-346-7155
FIBER OPTIC CABLE(FOC4)	= ZAYO GROUP	TOBY GARBER	702-830-6184
CABLE TV(C)	= SPECTRUM	JESUS GUTIERREZ	512-482-5685
WATER(W)	= CITY OF ROUND ROCK	KIT PERKINS	512-341-3145
WATER(W1)	= FERN BLUFF MUD	JANEY MILLER	512-238-0606
WATER(W2)	= AQUA AMERICA	LEO CRUZ	512-330-9904
WATER(W3)	= BRUSHY CREEK MUD	AMY GIANNINI	512-255-7871x237
WASTEWATER(WW)	= CITY OF ROUND ROCK	KIT PERKINS	512-341-3145
WASTEWATER(WW1)	= FERN BLUFF MUD	JANEY MILLER	512-238-0606
GAS(G)	= ATMOS ENERGY	MARTIN PEREZ	512-415-8426
ELECTRIC(E)	= ONCOR ELECTRIC DELIVERY	CAMERON ANDERSON	254-750-5264

DESIGNATING FIELD WORK BEGAN ON OCTOBER 23, 2019 AND WAS COMPLETED NOVEMBER 1, 2019. HALFF EXPRESSLY DISCLAIMS RESPONSIBILITY FOR NEW UTILITY INSTALLATIONS, MODIFICATIONS OR ADJUSTMENTS TO EXISTING UTILITIES AFTER NOVEMBER 1, 2019.

SIZE INFORMATION SHOWN HEREON IS TAKEN FROM AVAILABLE UTILITY RECORDS:

LEVEL "B" (B) INFORMATION OBTAINED THROUGH THE APPLICATION OF APPROPRIATE SURFACE GEOPHYSICAL METHODS TO DETERMINE THE EXISTENCE AND APPROXIMATE HORIZONTAL POSITION OF UTILITIES.

LEVEL "C" (C) DEPICTED ACCORDING TO RECORD INFORMATION AND EXISTING ASSOCIATED UTILITY STRUCTURES. NO ELECTRONIC INFORMATION WAS OBTAINED

LEVEL "D" (D) DEPICTED ACCORDING TO RECORD INFORMATION. NO ELECTRONIC INFORMATION WAS OBTAINED.

UNLESS OTHERWISE NOTED, UTILITY LINE LIMITS DEPICTED REPRESENT FIELD DESIGNATING LIMITS AND NOT END POINTS OF UTILITIES.

UTILITY INFORMATION LABELED LEVEL "C" OR "D" IS DERIVED FROM FURNISHED RECORDS. SUCH INFORMATION MAY NOT BE ACCURATE OR RELIABLE. HALFF EXPRESSLY DISCLAIMS RESPONSIBILITY FOR THE ACCURACY OR RELIABILITY OF UTILITY INFORMATION DEPICTED ACCORDING TO RECORDS.

WITHOUT VISUAL VERIFICATION, UTILITIES LOCATED BY MEANS OF TRACER WIRE MAY NOT DEPICT THE ACTUAL LOCATION OF THE UTILITY AS THE TRACER WIRE MAY NOT BE DIRECTLY ON OR ABOVE THE UTILITY.

THE ROADWAY AND ROW FILES WERE PROVIDED TO HALFF BY OTHERS AND ARE SHOWN FOR REFERENCE PURPOSES ONLY.

STORM SEWER AND ASSOCIATED APPURTENANCES ARE NOT SHOWN ON THESE PLANS.

WASTEWATER FLOWLINE INFORMATION SHOWN HEREON ARE BASED ON FIELD MEASURED DEPTHS AND SHALL BE DEEMED APPROXIMATE.

0 100 200 300 400
SCALE: 1"=400'

WYOMING SPRINGS
SEGMENT 1
ROUND ROCK, TX

ROUND ROCK TEXAS

halff
13620 BRANTWICK DR
BLDG C, STE 100
AUSTIN, TX 78729
(512) 777-4800
TBPELS FIRM #312

Revision No.	Date	Description

STATE OF TEXAS
RYAN D. LEWIS
95767
LICENSED PROFESSIONAL ENGINEER
4/28/23

100% SUBMITTAL

Project No.:	36179.002
Issued:	4/28/2023
Drawn By:	MH
Checked By:	BC
Scale:	1"=400'

Sheet Title
SUE- EXISTING UTILITY LAYOUT

456
Sheet Number

4/28/2023 12:43:57 PM ah1111 HALFF DwgNo 0500000000361700002CADD\Sheets\ASSUE-1-36179.002.dgn

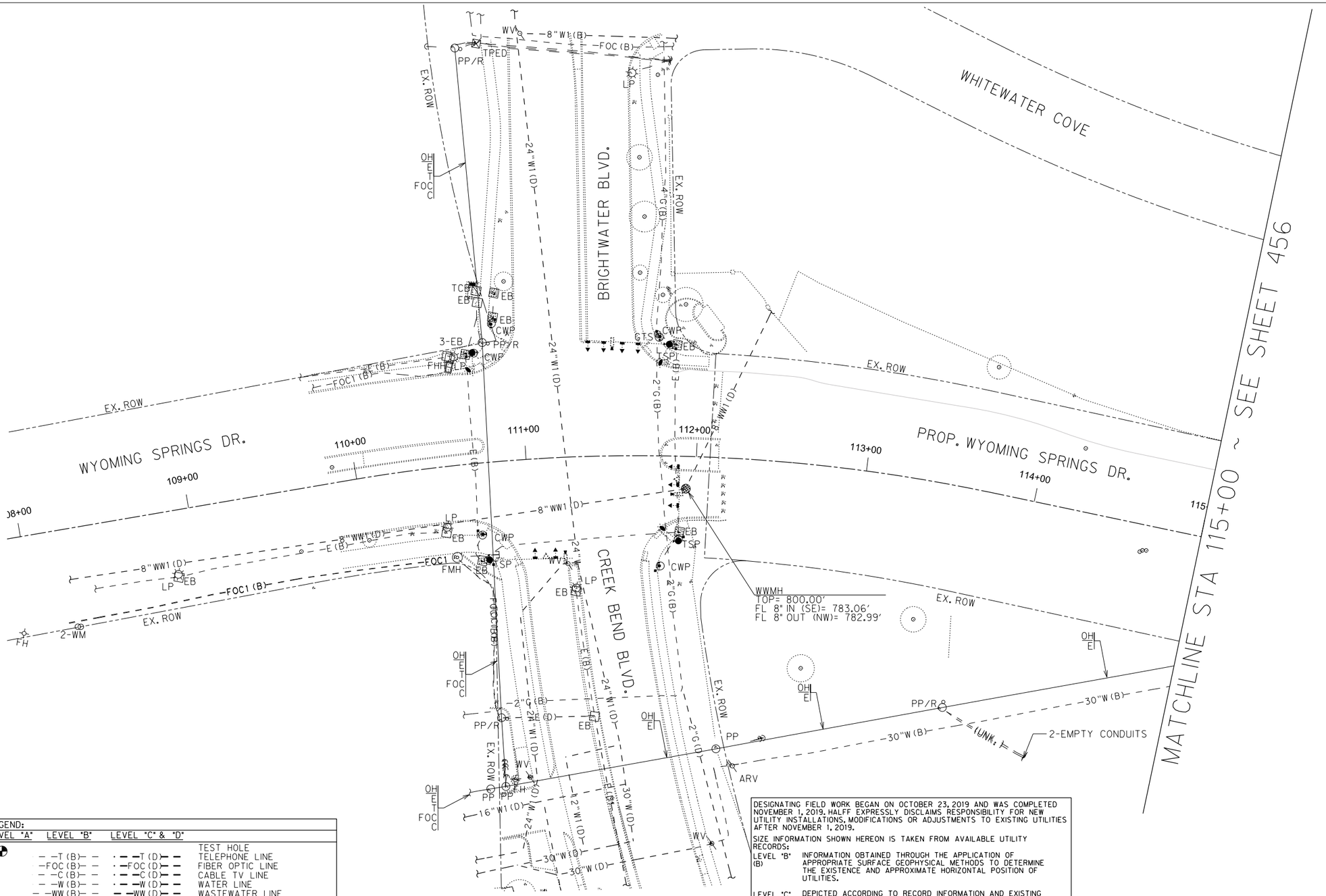

LEGEND:

LEVEL "A"	LEVEL "B"	LEVEL "C" & "D"	
			TEST HOLE
	–T(B)–	–T(D)–	TELEPHONE LINE
	–FOC(B)–	–FOC(D)–	FIBER OPTIC LINE
	–C(B)–	–C(D)–	CABLE TV LINE
	–W(B)–	–W(D)–	WATER LINE
	–WW(B)–	–WW(D)–	WASTEWATER LINE
	–G(B)–	–G(D)–	GAS LINE
	–E(B)–	–E(D)–	ELECTRIC LINE
			OVERHEAD UTILITY LINE
	–(UNK.)–	–(UNK.)–	UNKNOWN LINE

TPED	TELEPHONE PEDESTAL	PP	POWER POLE
FHH	FIBER HAND HOLE	PP/R	POWER POLE W/RISER
FMH	FIBER OPTIC MANHOLE	CWP	CROSSWALK POLE
FH	FIRE HYDRANT	EB	ELECTRIC BOX
WV	WATER VALVE	LP	LIGHT POLE
WMO	WATER METER	TSP	TRAFFIC SIGNAL POLE
WMH	WATER MANHOLE	TCB	TRAFFIC CONTROL BOX
WVLT	WATER VAULT		GUY WIRE
ARV	AIR RELEASE VALVE		UTILITY CONTINUATION
WVP	WATER VENT PIPE	E	UTILITY END POINT
WWMH	WASTEWATER MANHOLE	ABN.	ABANDONED UTILITY
CO	WASTEWATER CLEAN OUT	OH	OVERHEAD UTILITIES
WWVP	WASTEWATER VENT PIPE	CP	CONTROL POINT
GTS	GAS TEST STATION		

OWNERSHIP LEGEND:	OWNER:	CONTACT:	PHONE:
TELEPHONE(T)	= AT&T	HUGO VASQUEZ	512-870-4943
FIBER OPTIC CABLE(FOC)	= AT&T	HUGO VASQUEZ	512-870-4943
FIBER OPTIC CABLE(FOC1)	= MCI	DOUG KOUGL	214-732-5311
FIBER OPTIC CABLE(FOC2)	= ROUND ROCK ISD	MARK GABEHART	512-464-5166
FIBER OPTIC CABLE(FOC3)	= GRANDE COMMUNICATIONS	DANIEL PINA	737-346-7155
FIBER OPTIC CABLE(FOC4)	= ZAYO GROUP	TOBY GARBER	702-830-6184
CABLE TV(C)	= SPECTRUM	JESUS GUTIERREZ	512-482-5685
WATER(W)	= CITY OF ROUND ROCK	KIT PERKINS	512-341-3145
WATER(W1)	= FERN BLUFF MUD	JANEY MILLER	512-238-0606
WATER(W2)	= AQUA AMERICA	LEO CRUZ	512-330-9904
WATER(W3)	= BRUSHY CREEK MUD	AMY GIANNINI	512-255-7871x237
WASTEWATER(WW)	= CITY OF ROUND ROCK	KIT PERKINS	512-341-3145
WASTEWATER(WW1)	= FERN BLUFF MUD	JANEY MILLER	512-238-0606
GAS(G)	= ATMOS ENERGY	MARTIN PEREZ	512-415-8426
ELECTRIC(E)	= ONCOR ELECTRIC DELIVERY	CAMERON ANDERSON	254-750-5264

DESIGNATING FIELD WORK BEGAN ON OCTOBER 23, 2019 AND WAS COMPLETED NOVEMBER 1, 2019. HALFF EXPRESSLY DISCLAIMS RESPONSIBILITY FOR NEW UTILITY INSTALLATIONS, MODIFICATIONS OR ADJUSTMENTS TO EXISTING UTILITIES AFTER NOVEMBER 1, 2019.

SIZE INFORMATION SHOWN HEREON IS TAKEN FROM AVAILABLE UTILITY RECORDS:

LEVEL 'B' (B) INFORMATION OBTAINED THROUGH THE APPLICATION OF APPROPRIATE SURFACE GEOPHYSICAL METHODS TO DETERMINE THE EXISTENCE AND APPROXIMATE HORIZONTAL POSITION OF UTILITIES.

LEVEL 'C' (C) DEPICTED ACCORDING TO RECORD INFORMATION AND EXISTING ASSOCIATED UTILITY STRUCTURES. NO ELECTRONIC INFORMATION WAS OBTAINED

LEVEL 'D' (D) DEPICTED ACCORDING TO RECORD INFORMATION. NO ELECTRONIC INFORMATION WAS OBTAINED.

UNLESS OTHERWISE NOTED, UTILITY LINE LIMITS DEPICTED REPRESENT FIELD DESIGNATING LIMITS AND NOT END POINTS OF UTILITIES.

UTILITY INFORMATION LABELED LEVEL 'C' OR 'D' IS DERIVED FROM FURNISHED RECORDS. SUCH INFORMATION MAY NOT BE ACCURATE OR RELIABLE. HALFF EXPRESSLY DISCLAIMS RESPONSIBILITY FOR THE ACCURACY OR RELIABILITY OF UTILITY INFORMATION DEPICTED ACCORDING TO RECORDS.

WITHOUT VISUAL VERIFICATION, UTILITIES LOCATED BY MEANS OF TRACER WIRE MAY NOT DEPICT THE ACTUAL LOCATION OF THE UTILITY AS THE TRACER WIRE MAY NOT BE DIRECTLY ON OR ABOVE THE UTILITY.

THE ROADWAY AND ROW FILES WERE PROVIDED TO HALFF BY OTHERS AND ARE SHOWN FOR REFERENCE PURPOSES ONLY.

STORM SEWER AND ASSOCIATED APPURTENANCES ARE NOT SHOWN ON THESE PLANS.

WASTEWATER FLOWLINE INFORMATION SHOWN HEREON ARE BASED ON FIELD MEASURED DEPTHS AND SHALL BE DEEMED APPROXIMATE.

0 15 30 45 60
SCALE: 1"=60'

WYOMING SPRINGS
SEGMENT 1
ROUND ROCK, TX

ROUND ROCK TEXAS

halff
13620 BRANTWICK DR
BLDG C, STE 100
AUSTIN, TX 78729
(512) 777-4800
TBPELS FIRM #312

Revision No.	Date	Description

STATE OF TEXAS
RYAN D. LEWIS
95767
LICENSED
PROFESSIONAL ENGINEER
4/28/23

100% SUBMITTAL

Project No.:	36179.002
Issued:	4/28/2023
Drawn By:	MH
Checked By:	BC
Scale:	1"=60'

Sheet Title
SUE- EXISTING UTILITY LAYOUT

457
Sheet Number

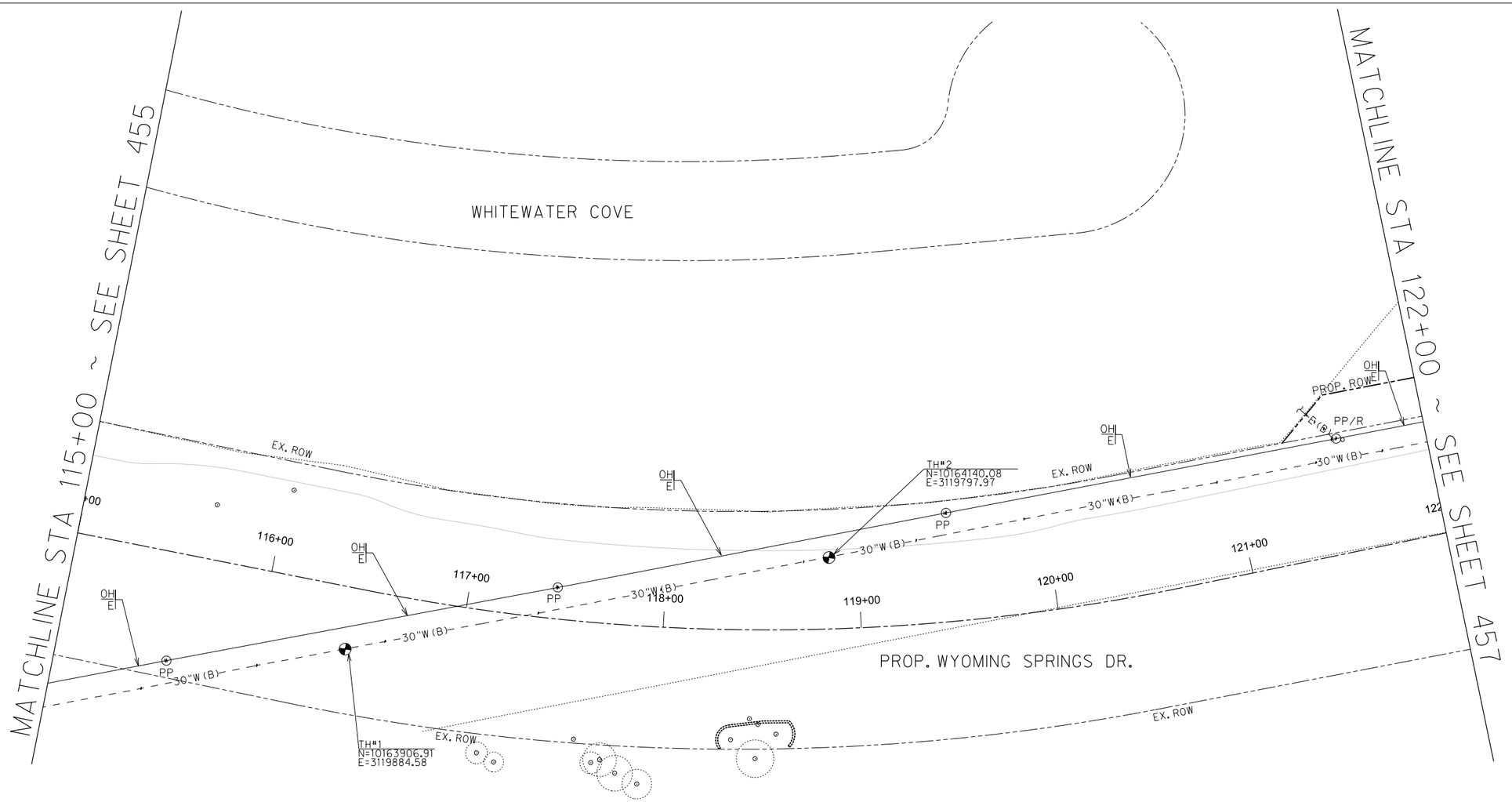

LEGEND:

LEVEL "A"	LEVEL "B"	LEVEL "C" & "D"	
			TEST HOLE
	–T(B)–	–T(D)–	TELEPHONE LINE
	–FOC(B)–	–FOC(D)–	FIBER OPTIC LINE
	–C(B)–	–C(D)–	CABLE TV LINE
	–W(B)–	–W(D)–	WATER LINE
	–WW(B)–	–WW(D)–	WASTEWATER LINE
	–G(B)–	–G(D)–	GAS LINE
	–E(B)–	–E(D)–	ELECTRIC LINE
			OVERHEAD UTILITY LINE
	–(UNK.)–	–(UNK.)–	UNKNOWN LINE

TPED	TELEPHONE PEDESTAL	PP	POWER POLE
FHH	FIBER OPTIC HAND HOLE	PP/R	POWER POLE W/RISER
FMH	FIBER OPTIC MANHOLE	CWP	CROSSWALK POLE
FH	FIRE HYDRANT	EB	ELECTRIC BOX
WV	WATER VALVE	LP	LIGHT POLE
WMO	WATER METER	TSP	TRAFFIC SIGNAL POLE
WMH	WATER MANHOLE	TCB	TRAFFIC CONTROL BOX
WVLT	WATER VAULT		GUY WIRE
ARV	AIR RELEASE VALVE		UTILITY CONTINUATION
WVP	WATER VENT PIPE		UTILITY END POINT
WWMH	WASTEWATER MANHOLE	ABN.	ABANDONED UTILITY
CO	WASTEWATER CLEAN OUT	OH	OVERHEAD UTILITIES
WWVP	WASTEWATER VENT PIPE	CP	CONTROL POINT
GTS	GAS TEST STATION		

TEST HOLE	OWNER	NORTHING	EASTING	SURF. ELEV.	DEPTH TO TOP
TH#1	CITY OF ROUND ROCK	10163906.91	3119884.58	793.53	4.91'
TH#2	CITY OF ROUND ROCK	10164140.08	3119797.97	787.67	6.70'

OWNERSHIP LEGEND:	OWNER:	CONTACT:	PHONE:
TELEPHONE(T)	= AT&T	HUGO VASQUEZ	512-870-4943
FIBER OPTIC CABLE(FOC)	= AT&T	HUGO VASQUEZ	512-870-4943
FIBER OPTIC CABLE(FOC1)	= MCI	DOUG KOUGL	214-732-5311
FIBER OPTIC CABLE(FOC2)	= ROUND ROCK ISD	MARK GABEHART	512-464-5166
FIBER OPTIC CABLE(FOC3)	= GRANDE COMMUNICATIONS	DANIEL PINA	737-346-7155
FIBER OPTIC CABLE(FOC4)	= ZAYO GROUP	TOBY GARBER	702-830-6184
CABLE TV(C)	= SPECTRUM	JESUS GUTIERREZ	512-482-5685
WATER(W)	= CITY OF ROUND ROCK	KIT PERKINS	512-341-3145
WATER(W1)	= FERN BLUFF MUD	JANEY MILLER	512-238-0606
WATER(W2)	= AQUA AMERICA	LEO CRUZ	512-330-9904
WATER(W3)	= BRUSHY CREEK MUD	AMY GIANNINI	512-255-7871x237
WASTEWATER(WW)	= CITY OF ROUND ROCK	KIT PERKINS	512-341-3145
WASTEWATER(WW1)	= FERN BLUFF MUD	JANEY MILLER	512-238-0606
GAS(G)	= ATMOS ENERGY	MARTIN PEREZ	512-415-8426
ELECTRIC(E)	= ONCOR ELECTRIC DELIVERY	CAMERON ANDERSON	254-750-5264

DESIGNATING FIELD WORK BEGAN ON OCTOBER 23, 2019 AND WAS COMPLETED NOVEMBER 1, 2019. HALFF EXPRESSLY DISCLAIMS RESPONSIBILITY FOR NEW UTILITY INSTALLATIONS, MODIFICATIONS OR ADJUSTMENTS TO EXISTING UTILITIES AFTER NOVEMBER 1, 2019.

SIZE INFORMATION SHOWN HEREON IS TAKEN FROM AVAILABLE UTILITY RECORDS:

LEVEL 'B' (B) INFORMATION OBTAINED THROUGH THE APPLICATION OF APPROPRIATE SURFACE GEOPHYSICAL METHODS TO DETERMINE THE EXISTENCE AND APPROXIMATE HORIZONTAL POSITION OF UTILITIES.

LEVEL 'C' (C) DEPICTED ACCORDING TO RECORD INFORMATION AND EXISTING ASSOCIATED UTILITY STRUCTURES. NO ELECTRONIC INFORMATION WAS OBTAINED

LEVEL 'D' (D) DEPICTED ACCORDING TO RECORD INFORMATION. NO ELECTRONIC INFORMATION WAS OBTAINED.

UNLESS OTHERWISE NOTED, UTILITY LINE LIMITS DEPICTED REPRESENT FIELD DESIGNATING LIMITS AND NOT END POINTS OF UTILITIES.

UTILITY INFORMATION LABELED LEVEL 'C' OR 'D' IS DERIVED FROM FURNISHED RECORDS. SUCH INFORMATION MAY NOT BE ACCURATE OR RELIABLE. HALFF EXPRESSLY DISCLAIMS RESPONSIBILITY FOR THE ACCURACY OR RELIABILITY OF UTILITY INFORMATION DEPICTED ACCORDING TO RECORDS.

WITHOUT VISUAL VERIFICATION, UTILITIES LOCATED BY MEANS OF TRACER WIRE MAY NOT DEPICT THE ACTUAL LOCATION OF THE UTILITY AS THE TRACER WIRE MAY NOT BE DIRECTLY ON OR ABOVE THE UTILITY.

THE ROADWAY AND ROW FILES WERE PROVIDED TO HALFF BY OTHERS AND ARE SHOWN FOR REFERENCE PURPOSES ONLY.

STORM SEWER AND ASSOCIATED APPURTENANCES ARE NOT SHOWN ON THESE PLANS.

WASTEWATER FLOWLINE INFORMATION SHOWN HEREON ARE BASED ON FIELD MEASURED DEPTHS AND SHALL BE DEEMED APPROXIMATE.

0 15 30 45 60
SCALE: 1"=60'

WYOMING SPRINGS
SEGMENT 1
ROUND ROCK, TX

ROUND ROCK TEXAS

halff
13620 BRANTWICK DR
BLDG C, STE 100
AUSTIN, TX 78729
(512) 777-4800
TBPELS FIRM #312

Revision No.	Date	Description

STATE OF TEXAS
RYAN D. LEWIS
95767
LICENSED PROFESSIONAL ENGINEER
4/28/23

100% SUBMITTAL

Project No.:	36179.002
Issued:	4/28/2023
Drawn By:	MH
Checked By:	BC
Scale:	1"=60'

Sheet Title
SUE- EXISTING UTILITY LAYOUT

458
Sheet Number

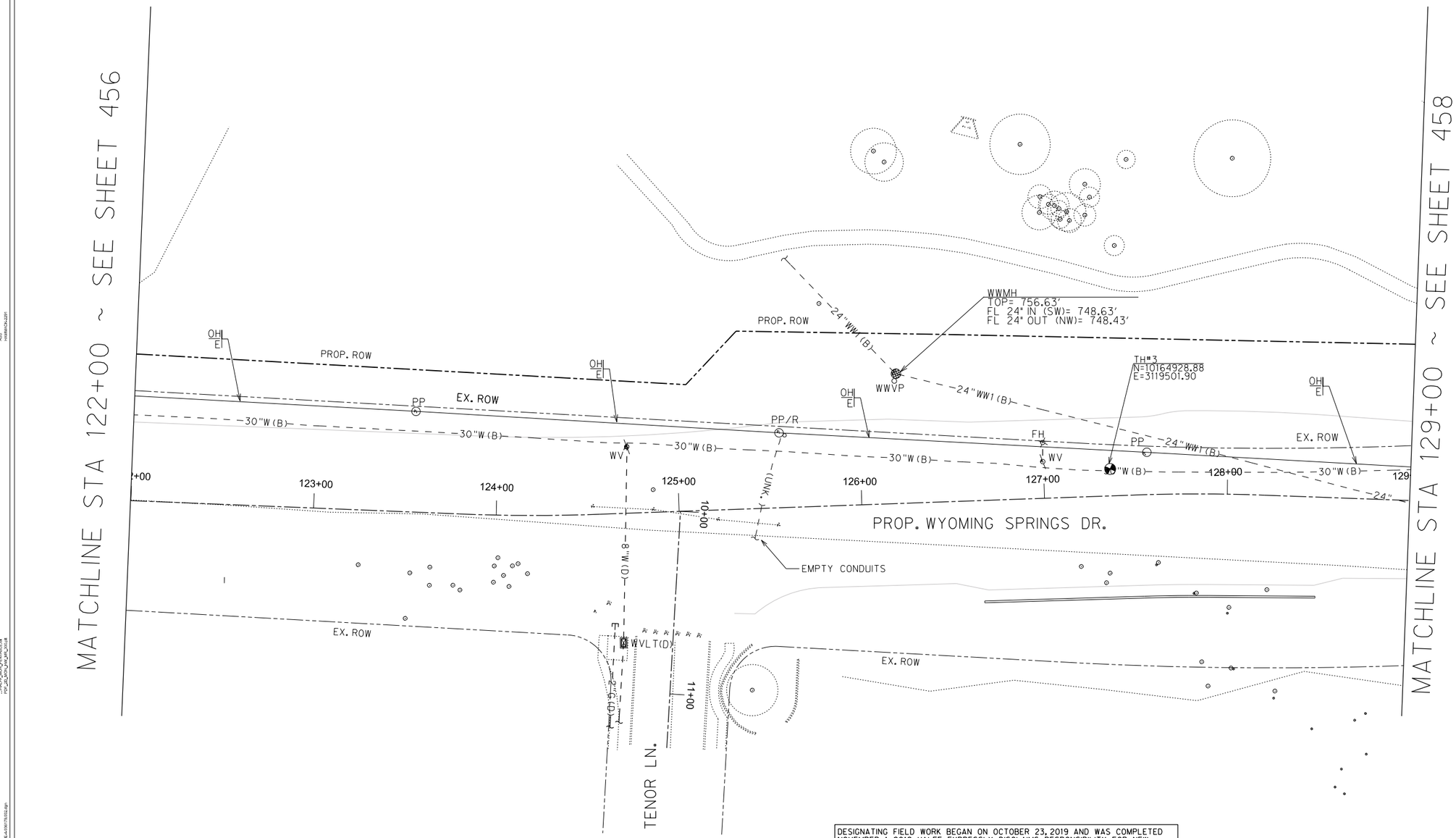

LEGEND:

LEVEL "A"	LEVEL "B"	LEVEL "C" & "D"	
			TEST HOLE
	–T(B)–	–T(D)–	TELEPHONE LINE
	–FOC(B)–	–FOC(D)–	FIBER OPTIC LINE
	–C(B)–	–C(D)–	CABLE TV LINE
	–W(B)–	–W(D)–	WATER LINE
	–WW(B)–	–WW(D)–	WASTEWATER LINE
	–G(B)–	–G(D)–	GAS LINE
	–E(B)–	–E(D)–	ELECTRIC LINE
			OVERHEAD UTILITY LINE
	–(UNK.)–	–(UNK.)–	UNKNOWN LINE

TPED	TELEPHONE PEDESTAL	PP	POWER POLE
FHH	FIBER OPTIC HAND HOLE	PP/R	POWER POLE W/RISER
FMH	FIBER OPTIC MANHOLE	CWP	CROSSWALK POLE
FH	FIRE HYDRANT	EB	ELECTRIC BOX
WV	WATER VALVE	LP	LIGHT POLE
WMO	WATER METER	TSP	TRAFFIC SIGNAL POLE
WMH	WATER MANHOLE	TCB	TRAFFIC CONTROL BOX
WVLT	WATER VAULT		GUY WIRE
ARV	AIR RELEASE VALVE		UTILITY CONTINUATION
WVP	WATER VENT PIPE	E	UTILITY END POINT
WWMH	WASTEWATER MANHOLE	ABN.	ABANDONED UTILITY
CO	WASTEWATER CLEAN OUT	OH	OVERHEAD UTILITIES
WWVP	WASTEWATER VENT PIPE	CP	CONTROL POINT
GTS	GAS TEST STATION		

OWNERSHIP LEGEND:	OWNER:	CONTACT:	PHONE:
TELEPHONE(T)	= AT&T	HUGO VASQUEZ	512-870-4943
FIBER OPTIC CABLE(FOC)	= AT&T	HUGO VASQUEZ	512-870-4943
FIBER OPTIC CABLE(FOC1)	= MCI	DOUG KOUGL	214-732-5311
FIBER OPTIC CABLE(FOC2)	= ROUND ROCK ISD	MARK GABEHART	512-464-5166
FIBER OPTIC CABLE(FOC3)	= GRANDE COMMUNICATIONS	DANIEL PINA	737-346-7155
FIBER OPTIC CABLE(FOC4)	= ZAYO GROUP	TOBY GARBER	702-830-6184
CABLE TV(C)	= SPECTRUM	JESUS GUTIERREZ	512-482-5685
WATER(W)	= CITY OF ROUND ROCK	KIT PERKINS	512-341-3145
WATER(W1)	= FERN BLUFF MUD	JANEY MILLER	512-238-0606
WATER(W2)	= AQUA AMERICA	LEO CRUZ	512-330-9904
WATER(W3)	= BRUSHY CREEK MUD	AMY GIANNINI	512-255-7871x237
WASTEWATER(WW)	= CITY OF ROUND ROCK	KIT PERKINS	512-341-3145
WASTEWATER(WW1)	= FERN BLUFF MUD	JANEY MILLER	512-238-0606
GAS(G)	= ATMOS ENERGY	MARTIN PEREZ	512-415-8426
ELECTRIC(E)	= ONCOR ELECTRIC DELIVERY	CAMERON ANDERSON	254-750-5264

DESIGNATING FIELD WORK BEGAN ON OCTOBER 23, 2019 AND WAS COMPLETED NOVEMBER 1, 2019. HALFF EXPRESSLY DISCLAIMS RESPONSIBILITY FOR NEW UTILITY INSTALLATIONS, MODIFICATIONS OR ADJUSTMENTS TO EXISTING UTILITIES AFTER NOVEMBER 1, 2019.

SIZE INFORMATION SHOWN HEREON IS TAKEN FROM AVAILABLE UTILITY RECORDS:

LEVEL "B" (B) INFORMATION OBTAINED THROUGH THE APPLICATION OF APPROPRIATE SURFACE GEOPHYSICAL METHODS TO DETERMINE THE EXISTENCE AND APPROXIMATE HORIZONTAL POSITION OF UTILITIES.

LEVEL "C" (C) DEPICTED ACCORDING TO RECORD INFORMATION AND EXISTING ASSOCIATED UTILITY STRUCTURES. NO ELECTRONIC INFORMATION WAS OBTAINED

LEVEL "D" (D) DEPICTED ACCORDING TO RECORD INFORMATION. NO ELECTRONIC INFORMATION WAS OBTAINED.

UNLESS OTHERWISE NOTED, UTILITY LINE LIMITS DEPICTED REPRESENT FIELD DESIGNATING LIMITS AND NOT END POINTS OF UTILITIES.

UTILITY INFORMATION LABELED LEVEL "C" OR "D" IS DERIVED FROM FURNISHED RECORDS. SUCH INFORMATION MAY NOT BE ACCURATE OR RELIABLE. HALFF EXPRESSLY DISCLAIMS RESPONSIBILITY FOR THE ACCURACY OR RELIABILITY OF UTILITY INFORMATION DEPICTED ACCORDING TO RECORDS.

WITHOUT VISUAL VERIFICATION, UTILITIES LOCATED BY MEANS OF TRACER WIRE MAY NOT DEPICT THE ACTUAL LOCATION OF THE UTILITY AS THE TRACER WIRE MAY NOT BE DIRECTLY ON OR ABOVE THE UTILITY.

THE ROADWAY AND ROW FILES WERE PROVIDED TO HALFF BY OTHERS AND ARE SHOWN FOR REFERENCE PURPOSES ONLY.

STORM SEWER AND ASSOCIATED APPURTENANCES ARE NOT SHOWN ON THESE PLANS.

WASTEWATER FLOWLINE INFORMATION SHOWN HEREON ARE BASED ON FIELD MEASURED DEPTHS AND SHALL BE DEEMED APPROXIMATE.

0 15 30 45 60
SCALE: 1"=60'

WYOMING SPRINGS
SEGMENT 1
ROUND ROCK, TX

ROUND ROCK TEXAS

halff
13620 BRANTWICK DR
BLDG C, STE 100
AUSTIN, TX 78729
(512) 777-4800
TBPELS FIRM #312

Revision No.	Date	Description

STATE OF TEXAS
RYAN D. LEWIS
95767
LICENSED PROFESSIONAL ENGINEER
4/28/23

100% SUBMITTAL

Project No.:	36179.002
Issued:	4/28/2023
Drawn By:	MH
Checked By:	BC
Scale:	1"=60'

Sheet Title
SUE- EXISTING UTILITY LAYOUT

459
Sheet Number

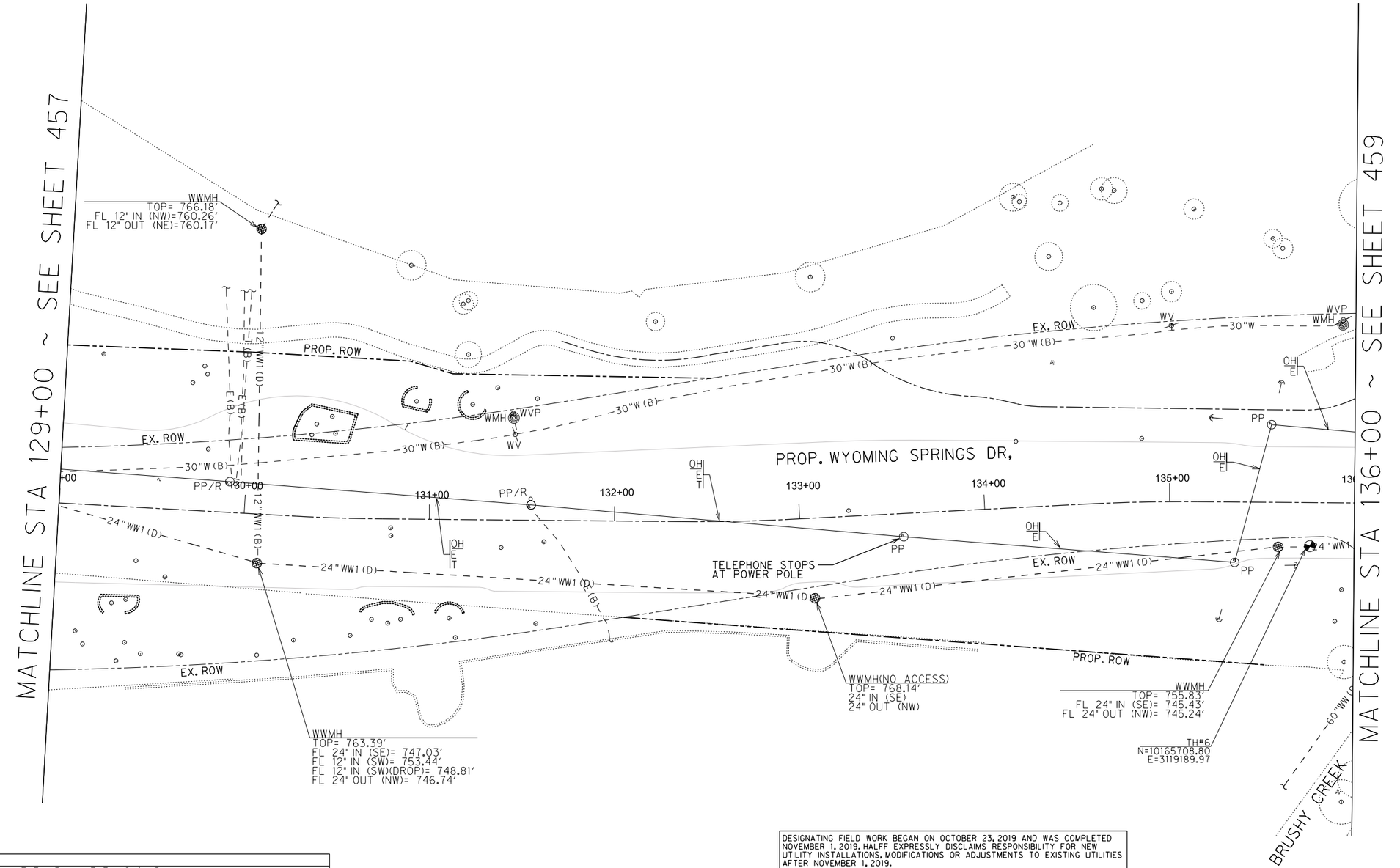

LEGEND:

LEVEL "A"	LEVEL "B"	LEVEL "C" & "D"	
			TEST HOLE
	–T(B)–	–T(D)–	TELEPHONE LINE
	–FOC(B)–	–FOC(D)–	FIBER OPTIC LINE
	–C(B)–	–C(D)–	CABLE TV LINE
	–W(B)–	–W(D)–	WATER LINE
	–WW(B)–	–WW(D)–	WASTEWATER LINE
	–G(B)–	–G(D)–	GAS LINE
	–E(B)–	–E(D)–	ELECTRIC LINE
			OVERHEAD UTILITY LINE
	–(UNK.)–	–(UNK.)–	UNKNOWN LINE

TPED	TELEPHONE PEDESTAL	PP	POWER POLE
FHH	FIBER OPTIC HAND HOLE	PP/R	POWER POLE W/RISER
FMH	FIBER OPTIC MANHOLE	CWP	CROSSWALK POLE
FH	FIRE HYDRANT	EB	ELECTRIC BOX
WV	WATER VALVE	LP	LIGHT POLE
WMO	WATER METER	TSP	TRAFFIC SIGNAL POLE
WMH	WATER MANHOLE	TCB	TRAFFIC CONTROL BOX
WVLT	WATER VAULT		GUY WIRE
ARV	AIR RELEASE VALVE		UTILITY CONTINUATION
WVP	WATER VENT PIPE	E-	UTILITY END POINT
WWMH	WASTEWATER MANHOLE	ABN.	ABANDONED UTILITY
CO	WASTEWATER CLEAN OUT	OH	OVERHEAD UTILITIES
WWVP	WASTEWATER VENT PIPE	CP	CONTROL POINT
GTS	GAS TEST STATION		

TEST HOLE	OWNER	NORTHING	EASTING	SURF. ELEV.	DEPTH TO TOP
TH#6	FERN BLUFF MUD	10165708.80	3119189.97	753.46'	7.51'

OWNERSHIP LEGEND:	OWNER:	CONTACT:	PHONE:
TELEPHONE(T)	= AT&T	HUGO VASQUEZ	512-870-4943
FIBER OPTIC CABLE(FOC)	= AT&T	HUGO VASQUEZ	512-870-4943
FIBER OPTIC CABLE(FOC1)	= MCI	DOUG KOUGL	214-732-5311
FIBER OPTIC CABLE(FOC2)	= ROUND ROCK ISD	MARK GABEHART	512-464-5166
FIBER OPTIC CABLE(FOC3)	= GRANDE COMMUNICATIONS	DANIEL PINA	737-346-7155
FIBER OPTIC CABLE(FOC4)	= ZAYO GROUP	TOBY GARBER	702-830-6184
CABLE TV(C)	= SPECTRUM	JESUS GUTIERREZ	512-482-5685
WATER(W)	= CITY OF ROUND ROCK	KIT PERKINS	512-341-3145
WATER(W1)	= FERN BLUFF MUD	JANEY MILLER	512-238-0606
WATER(W2)	= AQUA AMERICA	LEO CRUZ	512-330-9904
WATER(W3)	= BRUSHY CREEK MUD	AMY GIANNINI	512-255-7871x237
WASTEWATER(WW)	= CITY OF ROUND ROCK	KIT PERKINS	512-341-3145
WASTEWATER(WW1)	= FERN BLUFF MUD	JANEY MILLER	512-238-0606
GAS(G)	= ATMOS ENERGY	MARTIN PEREZ	512-415-8426
ELECTRIC(E)	= ONCOR ELECTRIC DELIVERY	CAMERON ANDERSON	254-750-5264

DESIGNATING FIELD WORK BEGAN ON OCTOBER 23, 2019 AND WAS COMPLETED NOVEMBER 1, 2019. HALFF EXPRESSLY DISCLAIMS RESPONSIBILITY FOR NEW UTILITY INSTALLATIONS, MODIFICATIONS OR ADJUSTMENTS TO EXISTING UTILITIES AFTER NOVEMBER 1, 2019.

SIZE INFORMATION SHOWN HEREON IS TAKEN FROM AVAILABLE UTILITY RECORDS:

LEVEL 'B' (B) INFORMATION OBTAINED THROUGH THE APPLICATION OF APPROPRIATE SURFACE GEOPHYSICAL METHODS TO DETERMINE THE EXISTENCE AND APPROXIMATE HORIZONTAL POSITION OF UTILITIES.

LEVEL 'C' (C) DEPICTED ACCORDING TO RECORD INFORMATION AND EXISTING ASSOCIATED UTILITY STRUCTURES. NO ELECTRONIC INFORMATION WAS OBTAINED

LEVEL 'D' (D) DEPICTED ACCORDING TO RECORD INFORMATION. NO ELECTRONIC INFORMATION WAS OBTAINED.

UNLESS OTHERWISE NOTED, UTILITY LINE LIMITS DEPICTED REPRESENT FIELD DESIGNATING LIMITS AND NOT END POINTS OF UTILITIES.

UTILITY INFORMATION LABELED LEVEL 'C' OR 'D' IS DERIVED FROM FURNISHED RECORDS. SUCH INFORMATION MAY NOT BE ACCURATE OR RELIABLE. HALFF EXPRESSLY DISCLAIMS RESPONSIBILITY FOR THE ACCURACY OR RELIABILITY OF UTILITY INFORMATION DEPICTED ACCORDING TO RECORDS.

WITHOUT VISUAL VERIFICATION, UTILITIES LOCATED BY MEANS OF TRACER WIRE MAY NOT DEPICT THE ACTUAL LOCATION OF THE UTILITY AS THE TRACER WIRE MAY NOT BE DIRECTLY ON OR ABOVE THE UTILITY.

THE ROADWAY AND ROW FILES WERE PROVIDED TO HALFF BY OTHERS AND ARE SHOWN FOR REFERENCE PURPOSES ONLY.

STORM SEWER AND ASSOCIATED APPURTENANCES ARE NOT SHOWN ON THESE PLANS.

WASTEWATER FLOWLINE INFORMATION SHOWN HEREON ARE BASED ON FIELD MEASURED DEPTHS AND SHALL BE DEEMED APPROXIMATE.

0 15 30 45 60
SCALE: 1"=60'

WYOMING SPRINGS
SEGMENT 1
ROUND ROCK, TX

ROUND ROCK TEXAS

halff
13620 BRANTWICK DR
BLDG C, STE 100
AUSTIN, TX 78729
(512) 777-4800
TBPELS FIRM #312

Revision No.	Date	Description

STATE OF TEXAS
RYAN D. LEWIS
95767
LICENSED PROFESSIONAL ENGINEER
4/28/23

100% SUBMITTAL

Project No.:	36179.002
Issued:	4/28/2023
Drawn By:	MH
Checked By:	BC
Scale:	1"=60'

Sheet Title
SUE- EXISTING UTILITY LAYOUT

460
Sheet Number

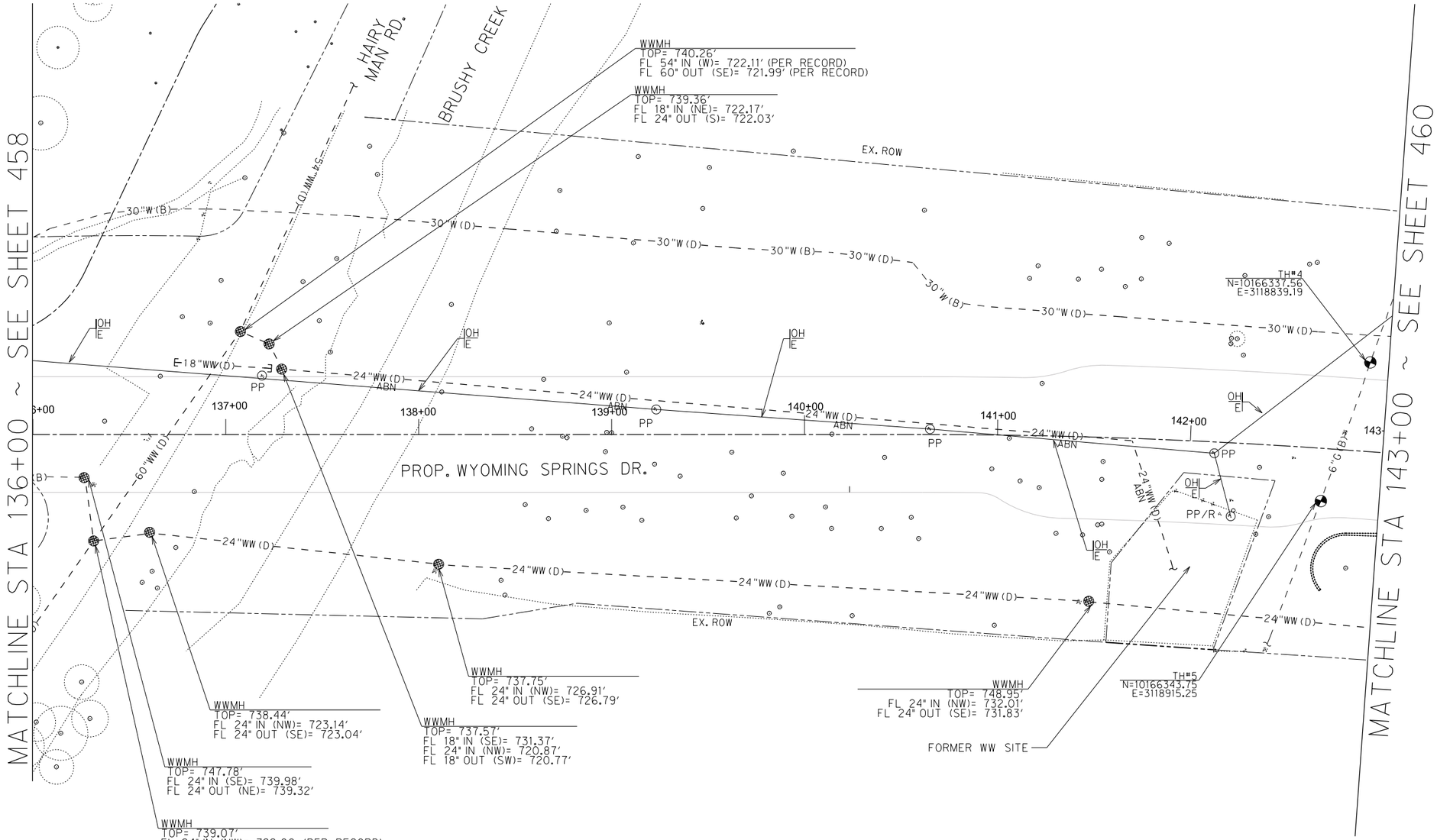

LEGEND:

LEVEL "A"	LEVEL "B"	LEVEL "C" & "D"	
			TEST HOLE
	-T(B)-	-T(D)-	TELEPHONE LINE
	-FOC(B)-	-FOC(D)-	FIBER OPTIC LINE
	-C(B)-	-C(D)-	CABLE TV LINE
	-W(B)-	-W(D)-	WATER LINE
	-WW(B)-	-WW(D)-	WASTEWATER LINE
	-G(B)-	-G(D)-	GAS LINE
	-E(B)-	-E(D)-	ELECTRIC LINE
			OVERHEAD UTILITY LINE
	-(UNK.)-	-(UNK.)-	UNKNOWN LINE

TPED	TELEPHONE PEDESTAL	PP	POWER POLE
FHH	FIBER OPTIC HAND HOLE	PP/R	POWER POLE W/RISER
FMH	FIBER OPTIC MANHOLE	CWP	CROSSWALK POLE
FH	FIRE HYDRANT	EB	ELECTRIC BOX
WV	WATER VALVE	LP	LIGHT POLE
WMO	WATER METER	TSP	TRAFFIC SIGNAL POLE
WMH	WATER MANHOLE	TCB	TRAFFIC CONTROL BOX
WVLT	WATER VAULT		GUY WIRE
ARV	AIR RELEASE VALVE		UTILITY CONTINUATION
WVP	WATER VENT PIPE	E	UTILITY END POINT
WWMH	WASTEWATER MANHOLE	ABN.	ABANDONED UTILITY
CO	WASTEWATER CLEAN OUT	OH	OVERHEAD UTILITIES
WWVP	WASTEWATER VENT PIPE	CP	CONTROL POINT
GTS	GAS TEST STATION		

TEST HOLE	OWNER	NORTHING	EASTING	SURF. ELEV.	DEPTH TO TOP
TH#4	ATMOS ENERGY	10166337.56	3118839.19	757.86'	3.41'
TH#5	ATMOS ENERGY	10166343.75	3118915.25	755.47'	2.20'

OWNERSHIP LEGEND:	OWNER:	CONTACT:	PHONE:
TELEPHONE(T)	= AT&T	HUGO VASQUEZ	512-870-4943
FIBER OPTIC CABLE(FOC)	= AT&T	HUGO VASQUEZ	512-870-4943
FIBER OPTIC CABLE(FOC1)	= MCI	DOUG KOUGL	214-732-5311
FIBER OPTIC CABLE(FOC2)	= ROUND ROCK ISD	MARK GABEHART	512-464-5166
FIBER OPTIC CABLE(FOC3)	= GRANDE COMMUNICATIONS	DANIEL PINA	737-346-7155
FIBER OPTIC CABLE(FOC4)	= ZAYO GROUP	TOBY GARBER	702-830-6184
CABLE TV(C)	= SPECTRUM	JESUS GUTIERREZ	512-482-5685
WATER(W)	= CITY OF ROUND ROCK	KIT PERKINS	512-341-3145
WATER(W1)	= FERN BLUFF MUD	JANEY MILLER	512-238-0606
WATER(W2)	= AQUA AMERICA	LEO CRUZ	512-330-9904
WATER(W3)	= BRUSHY CREEK MUD	AMY GIANNINI	512-255-7871x237
WASTEWATER(WW)	= CITY OF ROUND ROCK	KIT PERKINS	512-341-3145
WASTEWATER(WW1)	= FERN BLUFF MUD	JANEY MILLER	512-238-0606
GAS(G)	= ATMOS ENERGY	MARTIN PEREZ	512-415-8426
ELECTRIC(E)	= ONCOR ELECTRIC DELIVERY	CAMERON ANDERSON	254-750-5264

DESIGNATING FIELD WORK BEGAN ON OCTOBER 23, 2019 AND WAS COMPLETED NOVEMBER 1, 2019. HALFF EXPRESSLY DISCLAIMS RESPONSIBILITY FOR NEW UTILITY INSTALLATIONS, MODIFICATIONS OR ADJUSTMENTS TO EXISTING UTILITIES AFTER NOVEMBER 1, 2019.

SIZE INFORMATION SHOWN HEREON IS TAKEN FROM AVAILABLE UTILITY RECORDS:

LEVEL 'B' (B) INFORMATION OBTAINED THROUGH THE APPLICATION OF APPROPRIATE SURFACE GEOPHYSICAL METHODS TO DETERMINE THE EXISTENCE AND APPROXIMATE HORIZONTAL POSITION OF UTILITIES.

LEVEL 'C' (C) DEPICTED ACCORDING TO RECORD INFORMATION AND EXISTING ASSOCIATED UTILITY STRUCTURES. NO ELECTRONIC INFORMATION WAS OBTAINED

LEVEL 'D' (D) DEPICTED ACCORDING TO RECORD INFORMATION. NO ELECTRONIC INFORMATION WAS OBTAINED.

UNLESS OTHERWISE NOTED, UTILITY LINE LIMITS DEPICTED REPRESENT FIELD DESIGNATING LIMITS AND NOT END POINTS OF UTILITIES.

UTILITY INFORMATION LABELED LEVEL 'C' OR 'D' IS DERIVED FROM FURNISHED RECORDS. SUCH INFORMATION MAY NOT BE ACCURATE OR RELIABLE. HALFF EXPRESSLY DISCLAIMS RESPONSIBILITY FOR THE ACCURACY OR RELIABILITY OF UTILITY INFORMATION DEPICTED ACCORDING TO RECORDS.

WITHOUT VISUAL VERIFICATION, UTILITIES LOCATED BY MEANS OF TRACER WIRE MAY NOT DEPICT THE ACTUAL LOCATION OF THE UTILITY AS THE TRACER WIRE MAY NOT BE DIRECTLY ON OR ABOVE THE UTILITY.

THE ROADWAY AND ROW FILES WERE PROVIDED TO HALFF BY OTHERS AND ARE SHOWN FOR REFERENCE PURPOSES ONLY.

STORM SEWER AND ASSOCIATED APPURTENANCES ARE NOT SHOWN ON THESE PLANS.

WASTEWATER FLOWLINE INFORMATION SHOWN HEREON ARE BASED ON FIELD MEASURED DEPTHS AND SHALL BE DEEMED APPROXIMATE.

0 15 30 45 60
SCALE: 1"=60'

WYOMING SPRINGS
SEGMENT 1
ROUND ROCK, TX

ROUND ROCK TEXAS

halff
13620 BRANTWICK DR
BLDG C, STE 100
AUSTIN, TX 78729
(512) 777-4800
TBPELS FIRM #312

Revision No.	Date	Description

STATE OF TEXAS
RYAN D. LEWIS
95767
LICENSED PROFESSIONAL ENGINEER
4/28/23

100% SUBMITTAL

Project No.:	36179.002
Issued:	4/28/2023
Drawn By:	MH
Checked By:	BC
Scale:	1"=60'

Sheet Title
SUE- EXISTING UTILITY LAYOUT

461
Sheet Number

MATCHLINE STA 143+00 ~ SEE SHEET 459

MATCHLINE STA 150+00 ~ SEE SHEET 461

OH

6"G(D)

EX. ROW

ARV WVP

WV

ARV

30"W(B)

24"WW(D)

144+00

145+00

146+00

147+00

148+00

149+00

PROP. WYOMING SPRINGS DR.

WWMH
TOP= 756.25'
FL 24" IN (NW)= 737.52'
FL 24" OUT (SE)= 737.51'

WWMH
TOP= 764.88'
FL 24" IN (NW)= 738.58' (PER RECORD)
FL 24" OUT (SE)= 736.78' (PER RECORD)

LEGEND:

LEVEL "A"	LEVEL "B"	LEVEL "C" & "D"	
			TEST HOLE
	-T(B)-	-T(D)-	TELEPHONE LINE
	-FOC(B)-	-FOC(D)-	FIBER OPTIC LINE
	-C(B)-	-C(D)-	CABLE TV LINE
	-W(B)-	-W(D)-	WATER LINE
	-WW(B)-	-WW(D)-	WASTEWATER LINE
	-G(B)-	-G(D)-	GAS LINE
	-E(B)-	-E(D)-	ELECTRIC LINE
			OVERHEAD UTILITY LINE
	-(UNK.)-	-(UNK.)-	UNKNOWN LINE

TPED	TELEPHONE PEDESTAL	PP	POWER POLE
FHH	FIBER OPTIC HAND HOLE	PP/R	POWER POLE W/RISER
FMH	FIBER OPTIC MANHOLE	CWP	CROSSWALK POLE
FH	FIRE HYDRANT	EB	ELECTRIC BOX
WV	WATER VALVE	LP	LIGHT POLE
WMO	WATER METER	TSP	TRAFFIC SIGNAL POLE
WMH	WATER MANHOLE	TCB	TRAFFIC CONTROL BOX
WVLT	WATER VAULT		GUY WIRE
ARV	AIR RELEASE VALVE		UTILITY CONTINUATION
WVP	WATER VENT PIPE		UTILITY END POINT
WWMH	WASTEWATER MANHOLE	ABN.	ABANDONED UTILITY
CO	WASTEWATER CLEAN OUT	OH	OVERHEAD UTILITIES
WWVP	WASTEWATER VENT PIPE	CP	CONTROL POINT
GTS	GAS TEST STATION		

OWNERSHIP LEGEND:	OWNER:	CONTACT:	PHONE:
TELEPHONE(T)	= AT&T	HUGO VASQUEZ	512-870-4943
FIBER OPTIC CABLE(FOC)	= AT&T	HUGO VASQUEZ	512-870-4943
FIBER OPTIC CABLE(FOC1)	= MCI	DOUG KOUGL	214-732-5311
FIBER OPTIC CABLE(FOC2)	= ROUND ROCK ISD	MARK GABEHART	512-464-5166
FIBER OPTIC CABLE(FOC3)	= GRANDE COMMUNICATIONS	DANIEL PINA	737-346-7155
FIBER OPTIC CABLE(FOC4)	= ZAYO GROUP	TOBY GARBER	702-830-6184
CABLE TV(C)	= SPECTRUM	JESUS GUTIERREZ	512-482-5685
WATER(W)	= CITY OF ROUND ROCK	KIT PERKINS	512-341-3145
WATER(W1)	= FERN BLUFF MUD	JANEY MILLER	512-238-0606
WATER(W2)	= AQUA AMERICA	LEO CRUZ	512-330-9904
WATER(W3)	= BRUSHY CREEK MUD	AMY GIANNINI	512-255-7871x237
WASTEWATER(WW)	= CITY OF ROUND ROCK	KIT PERKINS	512-341-3145
WASTEWATER(WW1)	= FERN BLUFF MUD	JANEY MILLER	512-238-0606
GAS(G)	= ATMOS ENERGY	MARTIN PEREZ	512-415-8426
ELECTRIC(E)	= ONCOR ELECTRIC DELIVERY	CAMERON ANDERSON	254-750-5264

DESIGNATING FIELD WORK BEGAN ON OCTOBER 23, 2019 AND WAS COMPLETED NOVEMBER 1, 2019. HALFF EXPRESSLY DISCLAIMS RESPONSIBILITY FOR NEW UTILITY INSTALLATIONS, MODIFICATIONS OR ADJUSTMENTS TO EXISTING UTILITIES AFTER NOVEMBER 1, 2019.

SIZE INFORMATION SHOWN HEREON IS TAKEN FROM AVAILABLE UTILITY RECORDS:

LEVEL "B" (B) INFORMATION OBTAINED THROUGH THE APPLICATION OF APPROPRIATE SURFACE GEOPHYSICAL METHODS TO DETERMINE THE EXISTENCE AND APPROXIMATE HORIZONTAL POSITION OF UTILITIES.

LEVEL "C" (C) DEPICTED ACCORDING TO RECORD INFORMATION AND EXISTING ASSOCIATED UTILITY STRUCTURES. NO ELECTRONIC INFORMATION WAS OBTAINED

LEVEL "D" (D) DEPICTED ACCORDING TO RECORD INFORMATION. NO ELECTRONIC INFORMATION WAS OBTAINED.

UNLESS OTHERWISE NOTED, UTILITY LINE LIMITS DEPICTED REPRESENT FIELD DESIGNATING LIMITS AND NOT END POINTS OF UTILITIES.

UTILITY INFORMATION LABELED LEVEL "C" OR "D" IS DERIVED FROM FURNISHED RECORDS. SUCH INFORMATION MAY NOT BE ACCURATE OR RELIABLE. HALFF EXPRESSLY DISCLAIMS RESPONSIBILITY FOR THE ACCURACY OR RELIABILITY OF UTILITY INFORMATION DEPICTED ACCORDING TO RECORDS.

WITHOUT VISUAL VERIFICATION, UTILITIES LOCATED BY MEANS OF TRACER WIRE MAY NOT DEPICT THE ACTUAL LOCATION OF THE UTILITY AS THE TRACER WIRE MAY NOT BE DIRECTLY ON OR ABOVE THE UTILITY.

THE ROADWAY AND ROW FILES WERE PROVIDED TO HALFF BY OTHERS AND ARE SHOWN FOR REFERENCE PURPOSES ONLY.

STORM SEWER AND ASSOCIATED APPURTENANCES ARE NOT SHOWN ON THESE PLANS.

WASTEWATER FLOWLINE INFORMATION SHOWN HEREON ARE BASED ON FIELD MEASURED DEPTHS AND SHALL BE DEEMED APPROXIMATE.

0 15 30 45 60
SCALE: 1"=60'

WYOMING SPRINGS
SEGMENT 1
ROUND ROCK, TX

ROUND ROCK TEXAS

halff
13620 BRANTWICK DR
BLDG C, STE 100
AUSTIN, TX 78729
(512) 777-4600
TBPELS FIRM #312

Revision No.	Date	Description

STATE OF TEXAS
RYAN D. LEWIS
95767
LICENSED PROFESSIONAL ENGINEER
4/28/23

100% SUBMITTAL

Project No.:	36179.002
Issued:	4/28/2023
Drawn By:	MH
Checked By:	BC
Scale:	1"=60'

Sheet Title
SUE- EXISTING UTILITY LAYOUT

462
Sheet Number

USER: MMARCH-CORP
Plotted: 4/28/2023 8:39:37 PM BY MARCH, MICHAEL
P:\PLAT_MAPS_RPW\36179.002\Sheets\SUE\SUE-EXISTING UTILITY LAYOUT.dgn
4/28/2023 12:24:11 PM
HALFF
ps1711

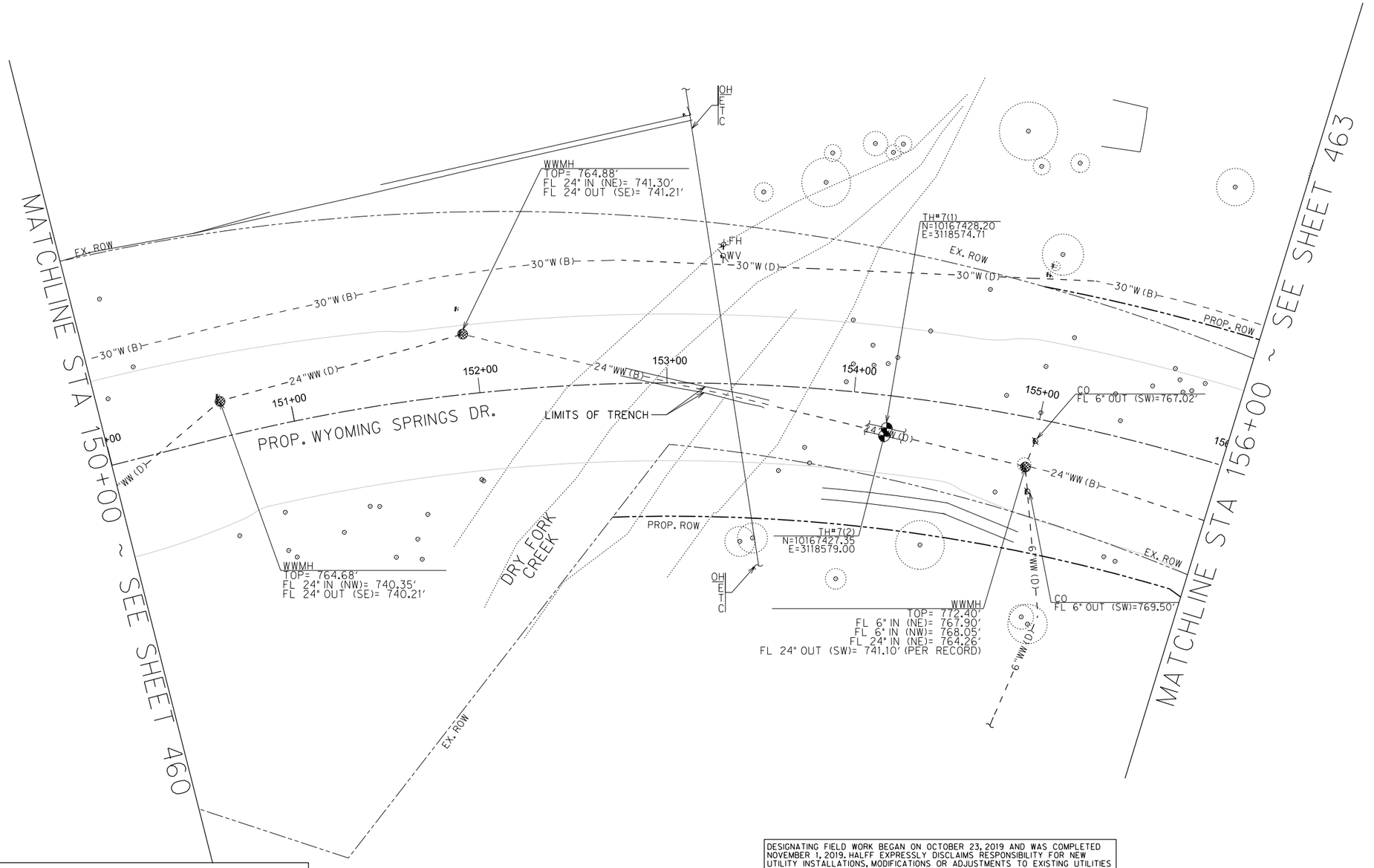

LEGEND:

LEVEL "A"	LEVEL "B"	LEVEL "C" & "D"	
◓			TEST HOLE
	– –T (B)– –	· – –T (D)– –	TELEPHONE LINE
	–FOC (B)– –	· –FOC (D)– –	FIBER OPTIC LINE
	– –C (B)– –	· – –C (D)– –	CABLE TV LINE
	– –W (B)– –	· – –W (D)– –	WATER LINE
	– –WW (B)– –	· – –WW (D)– –	WASTEWATER LINE
	– –G (B)– –	· – –G (D)– –	GAS LINE
	– –E (B)– –	· – –E (D)– –	ELECTRIC LINE OVERHEAD UTILITY LINE
	– (UNK.)– –	· – (UNK.)– –	UNKNOWN LINE

TPED⊠	TELEPHONE PEDESTAL	PP○	POWER POLE
FHH ▭	FIBER OPTIC HAND HOLE	PP/R○	POWER POLE W/RISER
FMH◎	FIBER OPTIC MANHOLE	CWP○	CROSSWALK POLE
FH ✧	FIRE HYDRANT	EB□	ELECTRIC BOX
WV ⊘	WATER VALVE	LP☼	LIGHT POLE
WM○	WATER METER	TSP⊘	TRAFFIC SIGNAL POLE
WMH◎	WATER MANHOLE	TCB⊠	TRAFFIC CONTROL BOX
WVLT	WATER VAULT	⟵	GUY WIRE
ARV ⊘	AIR RELEASE VALVE	⊢	UTILITY CONTINUATION
WVP○	WATER VENT PIPE	E-	UTILITY END POINT
WWMH◎	WASTEWATER MANHOLE	ABN.	ABANDONED UTILITY
CO⌀	WASTEWATER CLEAN OUT	OH	OVERHEAD UTILITIES
WWVP○	WASTEWATER VENT PIPE	CP △	CONTROL POINT
GTS⊘	GAS TEST STATION		

TEST HOLE	OWNER	NORTHING	EASTING	SURF. ELEV.	DEPTH TO TOP
TH#7(1)	CITY OF ROUND ROCK	10167428.20	3118574.71	760.80'	•12'
TH#7(2)	CITY OF ROUND ROCK	10167427.35	3118579.00	761.02'	•12'

• LINE WAS NOT ENCOUNTERED AT 12 FT. FOUND EXPOSED TRENCH SIDES WITH PEA GRAVEL FILL

OWNERSHIP LEGEND:	OWNER:	CONTACT:	PHONE:
TELEPHONE(T)	= AT&T	HUGO VASQUEZ	512-870-4943
FIBER OPTIC CABLE(FOC)	= AT&T	HUGO VASQUEZ	512-870-4943
FIBER OPTIC CABLE(FOC1)	= MCI	DOUG KOUGL	214-732-5311
FIBER OPTIC CABLE(FOC2)	= ROUND ROCK ISD	MARK GABEHART	512-464-5166
FIBER OPTIC CABLE(FOC3)	= GRANDE COMMUNICATIONS	DANIEL PINA	737-346-7155
FIBER OPTIC CABLE(FOC4)	= ZAYO GROUP	TOBY GARBER	702-830-6184
CABLE TV(C)	= SPECTRUM	JESUS GUTIERREZ	512-482-5685
WATER(W)	= CITY OF ROUND ROCK	KIT PERKINS	512-341-3145
WATER(W1)	= FERN BLUFF MUD	JANEY MILLER	512-238-0606
WATER(W2)	= AQUA AMERICA	LEO CRUZ	512-330-9904
WATER(W3)	= BRUSHY CREEK MUD	AMY GIANNINI	512-255-7871x237
WASTEWATER(WW)	= CITY OF ROUND ROCK	KIT PERKINS	512-341-3145
WASTEWATER(WW1)	= FERN BLUFF MUD	JANEY MILLER	512-238-0606
GAS(G)	= ATMOS ENERGY	MARTIN PEREZ	512-415-8426
ELECTRIC(E)	= ONCOR ELECTRIC DELIVERY	CAMERON ANDERSON	254-750-5264

DESIGNATING FIELD WORK BEGAN ON OCTOBER 23, 2019 AND WAS COMPLETED NOVEMBER 1, 2019. HALFF EXPRESSLY DISCLAIMS RESPONSIBILITY FOR NEW UTILITY INSTALLATIONS, MODIFICATIONS OR ADJUSTMENTS TO EXISTING UTILITIES AFTER NOVEMBER 1, 2019.

SIZE INFORMATION SHOWN HEREON IS TAKEN FROM AVAILABLE UTILITY RECORDS:

LEVEL "B" (B) INFORMATION OBTAINED THROUGH THE APPLICATION OF APPROPRIATE SURFACE GEOPHYSICAL METHODS TO DETERMINE THE EXISTENCE AND APPROXIMATE HORIZONTAL POSITION OF UTILITIES.

LEVEL "C" (C) DEPICTED ACCORDING TO RECORD INFORMATION AND EXISTING ASSOCIATED UTILITY STRUCTURES. NO ELECTRONIC INFORMATION WAS OBTAINED

LEVEL "D" (D) DEPICTED ACCORDING TO RECORD INFORMATION. NO ELECTRONIC INFORMATION WAS OBTAINED.

UNLESS OTHERWISE NOTED, UTILITY LINE LIMITS DEPICTED REPRESENT FIELD DESIGNATING LIMITS AND NOT END POINTS OF UTILITIES.

UTILITY INFORMATION LABELED LEVEL "C" OR "D" IS DERIVED FROM FURNISHED RECORDS. SUCH INFORMATION MAY NOT BE ACCURATE OR RELIABLE. HALFF EXPRESSLY DISCLAIMS RESPONSIBILITY FOR THE ACCURACY OR RELIABILITY OF UTILITY INFORMATION DEPICTED ACCORDING TO RECORDS.

WITHOUT VISUAL VERIFICATION, UTILITIES LOCATED BY MEANS OF TRACER WIRE MAY NOT DEPICT THE ACTUAL LOCATION OF THE UTILITY AS THE TRACER WIRE MAY NOT BE DIRECTLY ON OR ABOVE THE UTILITY.

THE ROADWAY AND ROW FILES WERE PROVIDED TO HALFF BY OTHERS AND ARE SHOWN FOR REFERENCE PURPOSES ONLY.

STORM SEWER AND ASSOCIATED APPURTENANCES ARE NOT SHOWN ON THESE PLANS.

WASTEWATER FLOWLINE INFORMATION SHOWN HEREON ARE BASED ON FIELD MEASURED DEPTHS AND SHALL BE DEEMED APPROXIMATE.

0 15 30 45 60
SCALE: 1"=60'

WYOMING SPRINGS
SEGMENT 1
ROUND ROCK, TX

ROUND ROCK TEXAS

halff
13620 BRANTWICK DR
BLDG C, STE 100
AUSTIN, TX 78729
(512) 777-4800
TBPELS FIRM #312

Revision No.	Date	Description

STATE OF TEXAS
RYAN D. LEWIS
95767
LICENSED PROFESSIONAL ENGINEER
4/28/23

100% SUBMITTAL

Project No.:	36179.002
Issued:	4/28/2023
Drawn By:	MH
Checked By:	BC
Scale:	1"=60'

Sheet Title
SUE- EXISTING UTILITY LAYOUT

463
Sheet Number

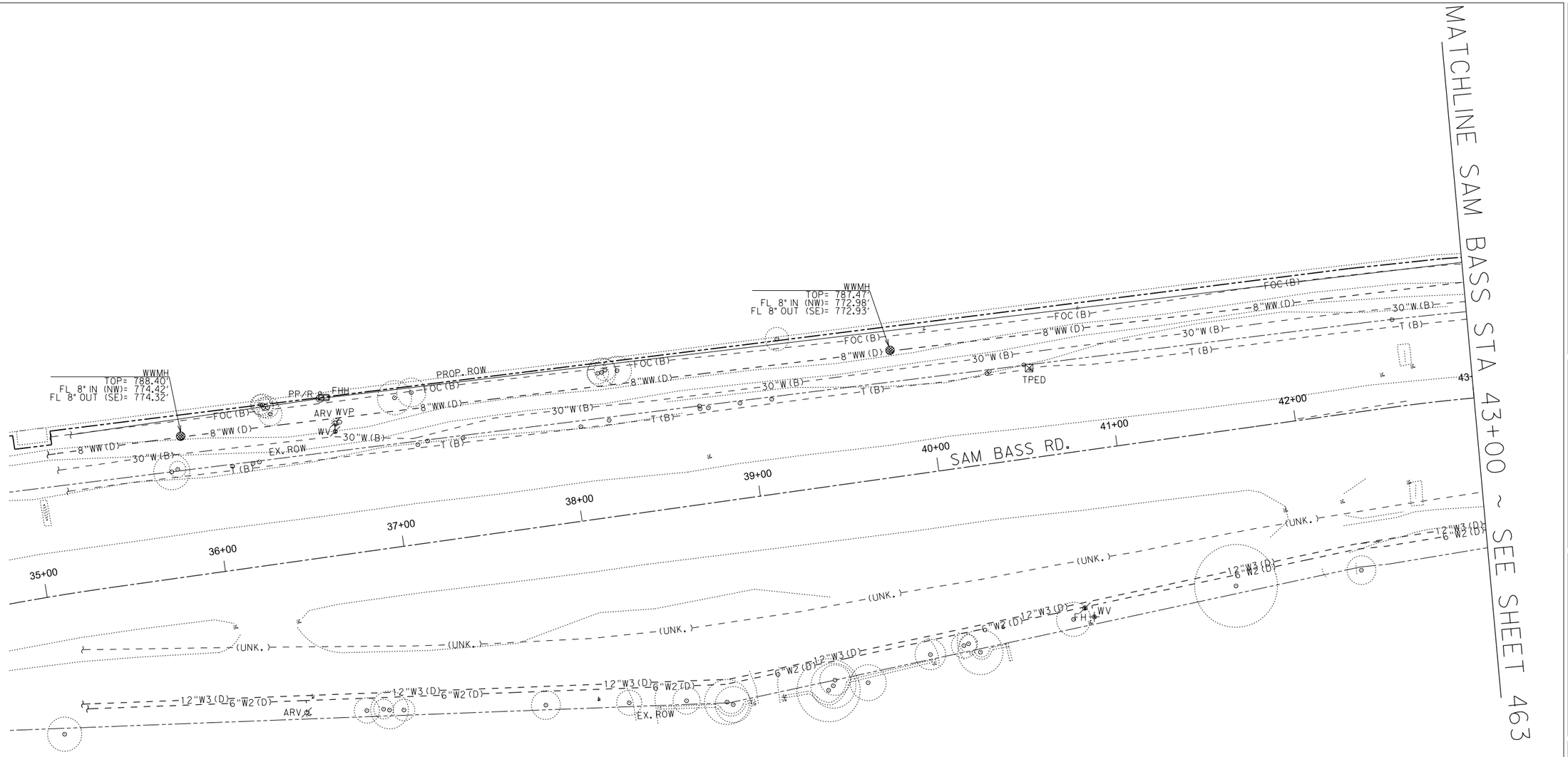

LEGEND:

LEVEL "A"	LEVEL "B"	LEVEL "C" & "D"	
			TEST HOLE
	–T (B)–	–T (D)–	TELEPHONE LINE
	–FOC (B)–	–FOC (D)–	FIBER OPTIC LINE
	–C (B)–	–C (D)–	CABLE TV LINE
	–W (B)–	–W (D)–	WATER LINE
	–WW (B)–	–WW (D)–	WASTEWATER LINE
	–G (B)–	–G (D)–	GAS LINE
	–E (B)–	–E (D)–	ELECTRIC LINE
			OVERHEAD UTILITY LINE
	–(UNK.)–	–(UNK.)–	UNKNOWN LINE

TPED	TELEPHONE PEDESTAL	PP	POWER POLE
FHH	FIBER OPTIC HAND HOLE	PP/R	POWER POLE W/RISER
FMH	FIBER OPTIC MANHOLE	CWP	CROSSWALK POLE
FH	FIRE HYDRANT	EB	ELECTRIC BOX
WV	WATER VALVE	LP	LIGHT POLE
WMO	WATER METER	TSP	TRAFFIC SIGNAL POLE
WMH	WATER MANHOLE	TCB	TRAFFIC CONTROL BOX
WVLT	WATER VAULT		GUY WIRE
ARV	AIR RELEASE VALVE		UTILITY CONTINUATION
WVP	WATER VENT PIPE	E	UTILITY END POINT
WWMH	WASTEWATER MANHOLE	ABN.	ABANDONED UTILITY
CO	WASTEWATER CLEAN OUT	OH	OVERHEAD UTILITIES
WWVP	WASTEWATER VENT PIPE	CP	CONTROL POINT
GTS	GAS TEST STATION		

OWNERSHIP LEGEND:	OWNER:	CONTACT:	PHONE:
TELEPHONE(T)	= AT&T	HUGO VASQUEZ	512-870-4943
FIBER OPTIC CABLE(FOC)	= AT&T	HUGO VASQUEZ	512-870-4943
FIBER OPTIC CABLE(FOC1)	= MCI	DOUG KOUGL	214-732-5311
FIBER OPTIC CABLE(FOC2)	= ROUND ROCK ISD	MARK GABEHART	512-464-5166
FIBER OPTIC CABLE(FOC3)	= GRANDE COMMUNICATIONS	DANIEL PINA	737-346-7155
FIBER OPTIC CABLE(FOC4)	= ZAYO GROUP	TOBY GARBER	702-830-6184
CABLE TV(C)	= SPECTRUM	JESUS GUTIERREZ	512-482-5685
WATER(W)	= CITY OF ROUND ROCK	KIT PERKINS	512-341-3145
WATER(W1)	= FERN BLUFF MUD	JANEY MILLER	512-238-0606
WATER(W2)	= AQUA AMERICA	LEO CRUZ	512-330-9904
WATER(W3)	= BRUSHY CREEK MUD	AMY GIANNINI	512-255-7871x237
WASTEWATER(WW)	= CITY OF ROUND ROCK	KIT PERKINS	512-341-3145
WASTEWATER(WW1)	= FERN BLUFF MUD	JANEY MILLER	512-238-0606
GAS(G)	= ATMOS ENERGY	MARTIN PEREZ	512-415-8426
ELECTRIC(E)	= ONCOR ELECTRIC DELIVERY	CAMERON ANDERSON	254-750-5264

DESIGNATING FIELD WORK BEGAN ON OCTOBER 23, 2019 AND WAS COMPLETED NOVEMBER 1, 2019. HALFF EXPRESSLY DISCLAIMS RESPONSIBILITY FOR NEW UTILITY INSTALLATIONS, MODIFICATIONS OR ADJUSTMENTS TO EXISTING UTILITIES AFTER NOVEMBER 1, 2019.

SIZE INFORMATION SHOWN HEREON IS TAKEN FROM AVAILABLE UTILITY RECORDS:

LEVEL "B" (B) INFORMATION OBTAINED THROUGH THE APPLICATION OF APPROPRIATE SURFACE GEOPHYSICAL METHODS TO DETERMINE THE EXISTENCE AND APPROXIMATE HORIZONTAL POSITION OF UTILITIES.

LEVEL "C" (C) DEPICTED ACCORDING TO RECORD INFORMATION AND EXISTING ASSOCIATED UTILITY STRUCTURES. NO ELECTRONIC INFORMATION WAS OBTAINED

LEVEL "D" (D) DEPICTED ACCORDING TO RECORD INFORMATION. NO ELECTRONIC INFORMATION WAS OBTAINED.

UNLESS OTHERWISE NOTED, UTILITY LINE LIMITS DEPICTED REPRESENT FIELD DESIGNATING LIMITS AND NOT END POINTS OF UTILITIES.

UTILITY INFORMATION LABELED LEVEL "C" OR "D" IS DERIVED FROM FURNISHED RECORDS. SUCH INFORMATION MAY NOT BE ACCURATE OR RELIABLE. HALFF EXPRESSLY DISCLAIMS RESPONSIBILITY FOR THE ACCURACY OR RELIABILITY OF UTILITY INFORMATION DEPICTED ACCORDING TO RECORDS.

WITHOUT VISUAL VERIFICATION, UTILITIES LOCATED BY MEANS OF TRACER WIRE MAY NOT DEPICT THE ACTUAL LOCATION OF THE UTILITY AS THE TRACER WIRE MAY NOT BE DIRECTLY ON OR ABOVE THE UTILITY.

THE ROADWAY AND ROW FILES WERE PROVIDED TO HALFF BY OTHERS AND ARE SHOWN FOR REFERENCE PURPOSES ONLY.

STORM SEWER AND ASSOCIATED APPURTENANCES ARE NOT SHOWN ON THESE PLANS.

WASTEWATER FLOWLINE INFORMATION SHOWN HEREON ARE BASED ON FIELD MEASURED DEPTHS AND SHALL BE DEEMED APPROXIMATE.

0 15 30 45 60
SCALE: 1"=60'

WYOMING SPRINGS
SEGMENT 1
ROUND ROCK, TX

ROUND ROCK TEXAS

halff
13620 BRANTWICK DR
BLDG C, STE 100
AUSTIN, TX 78729
(512) 777-4800
TBPELS FIRM #312

Revision No.	Date	Description

STATE OF TEXAS
RYAN D. LEWIS
95767
LICENSED PROFESSIONAL ENGINEER
4/28/23

100% SUBMITTAL

Project No.:	36179.002
Issued:	4/28/2023
Drawn By:	MH
Checked By:	BC
Scale:	1"=60'

Sheet Title
SUE- EXISTING UTILITY LAYOUT

464
Sheet Number

TEST HOLE	OWNER	NORTHING	EASTING	SURF. ELEV.	DEPTH TO TOP
TH#8	BCMUD	10167676.70	3118718.57	788.34'	3.04'
TH#9	AQUA	10167675.98	3118718.21	788.29'	2.08'
TH#10	CITY OF ROUND ROCK	10167656.73	3118709.88	786.43'	5.01'
TH#11	BCMUD	10167742.12	3118564.57	784.38'	3.22'
TH#12	AQUA	10167741.04	3118564.14	784.29'	2.62'
TH#15	BCMUD	10167548.91	3119080.35	788.77'	3.58'

MATCHLINE SAM BASS STA 43+00 ~ SEE SHEET 462

MATCHLINE STA 156+00 ~ SEE SHEET 461

MATCHLINE SAM BASS STA 51+00 ~ SEE SHEET 464

WYOMING SPRINGS DR.

PROP. WYOMING SPRINGS DR.

SAM BASS RD.

WWMH
TOP= 784.75'
FL 8" IN (NW)= 771.49'
FL 8" OUT (SE)= 771.35'

WWMH
TOP= 787.76'
FL 8" IN (NW)= 770.33'
FL 8" OUT (SW)= 770.31'

WWMH
TOP= 782.88'
FL 8" IN (NE)= 770.07'
FL 8" OUT (SE)= 769.97'

WWMH
TOP= 784.67'
FL 8" IN (NW)= 767.12'
FL 24" IN (SW)= 765.94'
FL 36" OUT (NE)= 766.03'

TH#11
N=10167742.12
E=3118564.57

TH#12
N=10167741.04
E=3118564.14

TH#8
N=10167676.70
E=3118718.57

TH#9
N=10167675.98
E=3118718.21

TH#10
N=10167656.73
E=3118709.88

TH#15
N=10167548.91
E=3119080.35

LEGEND:

LEVEL "A"	LEVEL "B"	LEVEL "C" & "D"	
			TEST HOLE
	-T(B)-	-T(D)-	TELEPHONE LINE
	-FOC(B)-	-FOC(D)-	FIBER OPTIC LINE
	-C(B)-	-C(D)-	CABLE TV LINE
	-W(B)-	-W(D)-	WATER LINE
	-WW(B)-	-WW(D)-	WASTEWATER LINE
	-G(B)-	-G(D)-	GAS LINE
	-E(B)-	-E(D)-	ELECTRIC LINE
			OVERHEAD UTILITY LINE
	-(UNK.)-	-(UNK.)-	UNKNOWN LINE

TPED	TELEPHONE PEDESTAL	PP	POWER POLE
FHH	FIBER OPTIC HAND HOLE	PP/R	POWER POLE W/RISER
FMH	FIBER OPTIC MANHOLE	CWP	CROSSWALK POLE
FH	FIRE HYDRANT	EB	ELECTRIC BOX
WV	WATER VALVE	LP	LIGHT POLE
WMO	WATER METER	TSP	TRAFFIC SIGNAL POLE
WMH	WATER MANHOLE	TCB	TRAFFIC CONTROL BOX
WVLT	WATER VAULT		GUY WIRE
ARV	AIR RELEASE VALVE		UTILITY CONTINUATION
WVP	WATER VENT PIPE	E-	UTILITY END POINT
WWMH	WASTEWATER MANHOLE	ABN.	ABANDONED UTILITY
CO	WASTEWATER CLEAN OUT	OH	OVERHEAD UTILITIES
WWVP	WASTEWATER VENT PIPE	CP	CONTROL POINT
GTS	GAS TEST STATION		

OWNERSHIP LEGEND:	OWNER:	CONTACT:	PHONE:
TELEPHONE(T)	= AT&T	HUGO VASQUEZ	512-870-4943
FIBER OPTIC CABLE(FOC)	= AT&T	HUGO VASQUEZ	512-870-4943
FIBER OPTIC CABLE(FOC1)	= MCI	DOUG KOUGL	214-732-5311
FIBER OPTIC CABLE(FOC2)	= ROUND ROCK ISD	MARK GABEHART	512-464-5166
FIBER OPTIC CABLE(FOC3)	= GRANDE COMMUNICATIONS	DANIEL PINA	737-346-7155
FIBER OPTIC CABLE(FOC4)	= ZAYO GROUP	TOBY GARBER	702-830-6184
CABLE TV(C)	= SPECTRUM	JESUS GUTIERREZ	512-482-5685
WATER(W)	= CITY OF ROUND ROCK	KIT PERKINS	512-341-3145
WATER(W1)	= FERN BLUFF MUD	JANEY MILLER	512-238-0606
WATER(W2)	= AQUA AMERICA	LEO CRUZ	512-330-9904
WATER(W3)	= BRUSHY CREEK MUD	AMY GIANNINI	512-255-7871x237
WASTEWATER(WW)	= CITY OF ROUND ROCK	KIT PERKINS	512-341-3145
WASTEWATER(WW1)	= FERN BLUFF MUD	JANEY MILLER	512-238-0606
GAS(G)	= ATMOS ENERGY	MARTIN PEREZ	512-415-8426
ELECTRIC(E)	= ONCOR ELECTRIC DELIVERY	CAMERON ANDERSON	254-750-5264

DESIGNATING FIELD WORK BEGAN ON OCTOBER 23, 2019 AND WAS COMPLETED NOVEMBER 1, 2019. HALFF EXPRESSLY DISCLAIMS RESPONSIBILITY FOR NEW UTILITY INSTALLATIONS, MODIFICATIONS OR ADJUSTMENTS TO EXISTING UTILITIES AFTER NOVEMBER 1, 2019.

SIZE INFORMATION SHOWN HEREON IS TAKEN FROM AVAILABLE UTILITY RECORDS:

LEVEL "B" (B) INFORMATION OBTAINED THROUGH THE APPLICATION OF APPROPRIATE SURFACE GEOPHYSICAL METHODS TO DETERMINE THE EXISTENCE AND APPROXIMATE HORIZONTAL POSITION OF UTILITIES.

LEVEL "C" (C) DEPICTED ACCORDING TO RECORD INFORMATION AND EXISTING ASSOCIATED UTILITY STRUCTURES. NO ELECTRONIC INFORMATION WAS OBTAINED

LEVEL "D" (D) DEPICTED ACCORDING TO RECORD INFORMATION. NO ELECTRONIC INFORMATION WAS OBTAINED.

UNLESS OTHERWISE NOTED, UTILITY LINE LIMITS DEPICTED REPRESENT FIELD DESIGNATING LIMITS AND NOT END POINTS OF UTILITIES.

UTILITY INFORMATION LABELED LEVEL "C" OR "D" IS DERIVED FROM FURNISHED RECORDS. SUCH INFORMATION MAY NOT BE ACCURATE OR RELIABLE. HALFF EXPRESSLY DISCLAIMS RESPONSIBILITY FOR THE ACCURACY OR RELIABILITY OF UTILITY INFORMATION DEPICTED ACCORDING TO RECORDS.

WITHOUT VISUAL VERIFICATION, UTILITIES LOCATED BY MEANS OF TRACER WIRE MAY NOT DEPICT THE ACTUAL LOCATION OF THE UTILITY AS THE TRACER WIRE MAY NOT BE DIRECTLY ON OR ABOVE THE UTILITY.

THE ROADWAY AND ROW FILES WERE PROVIDED TO HALFF BY OTHERS AND ARE SHOWN FOR REFERENCE PURPOSES ONLY.

STORM SEWER AND ASSOCIATED APPURTENANCES ARE NOT SHOWN ON THESE PLANS.

WASTEWATER FLOWLINE INFORMATION SHOWN HEREON ARE BASED ON FIELD MEASURED DEPTHS AND SHALL BE DEEMED APPROXIMATE.

0 15 30 45 60
SCALE: 1"=60'

WYOMING SPRINGS
SEGMENT 1
ROUND ROCK, TX

ROUND ROCK TEXAS

halff
13620 BRANTWICK DR
BLDG C, STE 100
AUSTIN, TX 78729
(512) 777-4800
TBPELS FIRM #312

Revision No.	Date	Description

STATE OF TEXAS
RYAN G. LEWIS
95767
LICENSED PROFESSIONAL ENGINEER
4/28/23

100% SUBMITTAL

Project No.:	36179.002
Issued:	4/28/2023
Drawn By:	MH
Checked By:	BC
Scale:	1"=60'

Sheet Title
SUE- EXISTING UTILITY LAYOUT

465
Sheet Number

TEST HOLE	OWNER	NORTHING	EASTING	SURF. ELEV.	DEPTH TO TOP
TH#13	BCMUD	10167433.85	3119515.59	791.16'	3.46'
TH#14	AQUA	10167675.98	3118718.21	791.15'	2.24'

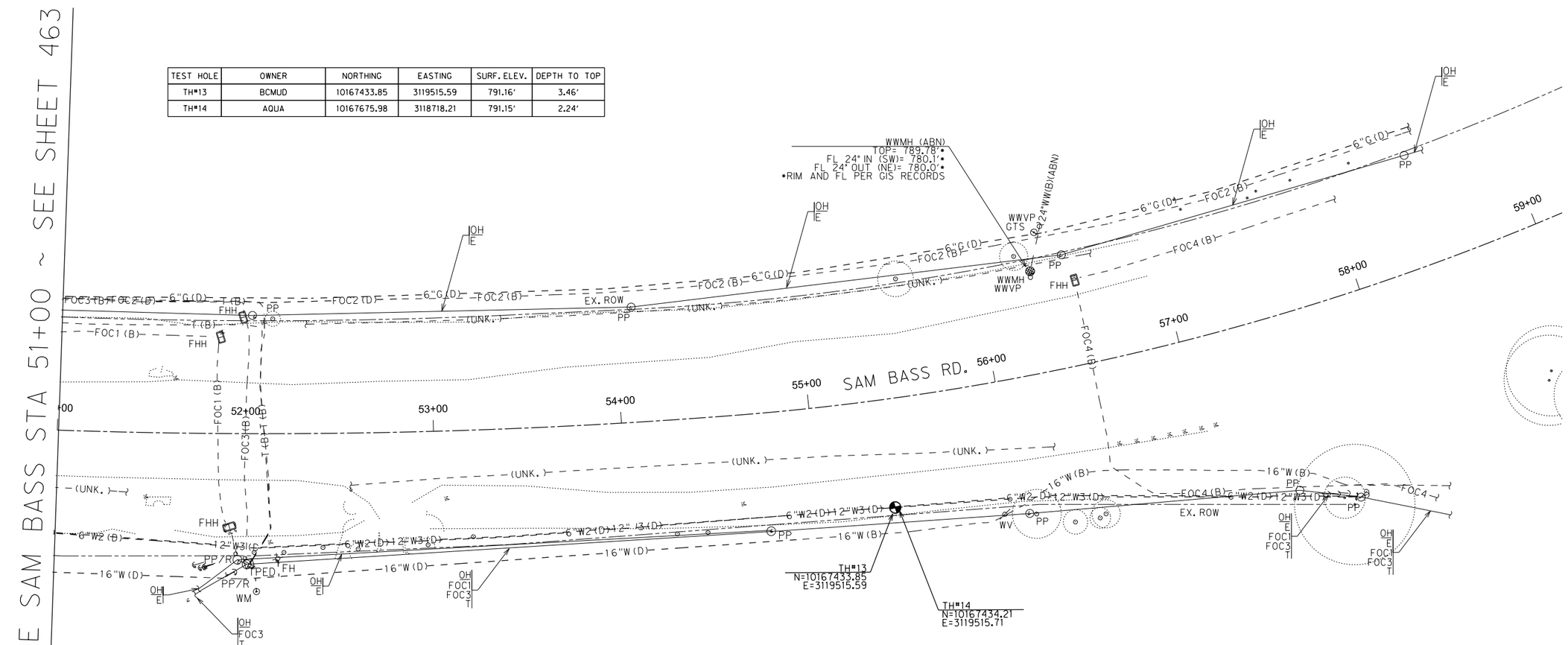

LEGEND:

LEVEL "A"	LEVEL "B"	LEVEL "C" & "D"	
			TEST HOLE
	–T(B)–	–T(D)–	TELEPHONE LINE
	–FOC(B)–	–FOC(D)–	FIBER OPTIC LINE
	–C(B)–	–C(D)–	CABLE TV LINE
	–W(B)–	–W(D)–	WATER LINE
	–WW(B)–	–WW(D)–	WASTEWATER LINE
	–G(B)–	–G(D)–	GAS LINE
	–E(B)–	–E(D)–	ELECTRIC LINE
			OVERHEAD UTILITY LINE
	–(UNK.)–	–(UNK.)–	UNKNOWN LINE

TPED	TELEPHONE PEDESTAL	PP	POWER POLE
FHH	FIBER OPTIC HAND HOLE	PP/R	POWER POLE W/RISER
FMH	FIBER OPTIC MANHOLE	CWP	CROSSWALK POLE
FH	FIRE HYDRANT	EB	ELECTRIC BOX
WV	WATER VALVE	LP	LIGHT POLE
WMO	WATER METER	TSP	TRAFFIC SIGNAL POLE
WMH	WATER MANHOLE	TCB	TRAFFIC CONTROL BOX
WVLT	WATER VAULT		GUY WIRE
ARV	AIR RELEASE VALVE		UTILITY CONTINUATION
WVP	WATER VENT PIPE	E	UTILITY END POINT
WWMH	WASTEWATER MANHOLE	ABN.	ABANDONED UTILITY
CO	WASTEWATER CLEAN OUT	OH	OVERHEAD UTILITIES
WWVP	WASTEWATER VENT PIPE	CP	CONTROL POINT
GTS	GAS TEST STATION		

OWNERSHIP LEGEND:	OWNER:	CONTACT:	PHONE:
TELEPHONE(T)	= AT&T	HUGO VASQUEZ	512-870-4943
FIBER OPTIC CABLE(FOC)	= AT&T	HUGO VASQUEZ	512-870-4943
FIBER OPTIC CABLE(FOC1)	= MCI	DOUG KOUGL	214-732-5311
FIBER OPTIC CABLE(FOC2)	= ROUND ROCK ISD	MARK GABEHART	512-464-5166
FIBER OPTIC CABLE(FOC3)	= GRANDE COMMUNICATIONS	DANIEL PINA	737-346-7155
FIBER OPTIC CABLE(FOC4)	= ZAYO GROUP	TOBY GARBER	702-830-6184
CABLE TV(C)	= SPECTRUM	JESUS GUTIERREZ	512-482-5685
WATER(W)	= CITY OF ROUND ROCK	KIT PERKINS	512-341-3145
WATER(W1)	= FERN BLUFF MUD	JANEY MILLER	512-238-0606
WATER(W2)	= AQUA AMERICA	LEO CRUZ	512-330-9904
WATER(W3)	= BRUSHY CREEK MUD	AMY GIANNINI	512-255-7871x237
WASTEWATER(WW)	= CITY OF ROUND ROCK	KIT PERKINS	512-341-3145
WASTEWATER(WW1)	= FERN BLUFF MUD	JANEY MILLER	512-238-0606
GAS(G)	= ATMOS ENERGY	MARTIN PEREZ	512-415-8426
ELECTRIC(E)	= ONCOR ELECTRIC DELIVERY	CAMERON ANDERSON	254-750-5264

DESIGNATING FIELD WORK BEGAN ON OCTOBER 23, 2019 AND WAS COMPLETED NOVEMBER 1, 2019. HALFF EXPRESSLY DISCLAIMS RESPONSIBILITY FOR NEW UTILITY INSTALLATIONS, MODIFICATIONS OR ADJUSTMENTS TO EXISTING UTILITIES AFTER NOVEMBER 1, 2019.

SIZE INFORMATION SHOWN HEREON IS TAKEN FROM AVAILABLE UTILITY RECORDS:

LEVEL "B" (B) INFORMATION OBTAINED THROUGH THE APPLICATION OF APPROPRIATE SURFACE GEOPHYSICAL METHODS TO DETERMINE THE EXISTENCE AND APPROXIMATE HORIZONTAL POSITION OF UTILITIES.

LEVEL "C" (C) DEPICTED ACCORDING TO RECORD INFORMATION AND EXISTING ASSOCIATED UTILITY STRUCTURES. NO ELECTRONIC INFORMATION WAS OBTAINED

LEVEL "D" (D) DEPICTED ACCORDING TO RECORD INFORMATION. NO ELECTRONIC INFORMATION WAS OBTAINED.

UNLESS OTHERWISE NOTED, UTILITY LINE LIMITS DEPICTED REPRESENT FIELD DESIGNATING LIMITS AND NOT END POINTS OF UTILITIES.

UTILITY INFORMATION LABELED LEVEL "C" OR "D" IS DERIVED FROM FURNISHED RECORDS. SUCH INFORMATION MAY NOT BE ACCURATE OR RELIABLE. HALFF EXPRESSLY DISCLAIMS RESPONSIBILITY FOR THE ACCURACY OR RELIABILITY OF UTILITY INFORMATION DEPICTED ACCORDING TO RECORDS.

WITHOUT VISUAL VERIFICATION, UTILITIES LOCATED BY MEANS OF TRACER WIRE MAY NOT DEPICT THE ACTUAL LOCATION OF THE UTILITY AS THE TRACER WIRE MAY NOT BE DIRECTLY ON OR ABOVE THE UTILITY.

THE ROADWAY AND ROW FILES WERE PROVIDED TO HALFF BY OTHERS AND ARE SHOWN FOR REFERENCE PURPOSES ONLY.

STORM SEWER AND ASSOCIATED APPURTENANCES ARE NOT SHOWN ON THESE PLANS.

WASTEWATER FLOWLINE INFORMATION SHOWN HEREON ARE BASED ON FIELD MEASURED DEPTHS AND SHALL BE DEEMED APPROXIMATE.

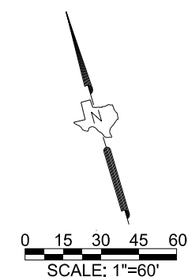

WYOMING SPRINGS
SEGMENT 1
ROUND ROCK, TX

ROUND ROCK TEXAS

halff
13620 BRANTWICK DR
BLDG C, STE 100
AUSTIN, TX 78729
(512) 777-4800
TBPELS FIRM #312

Revision No.	Date	Description

STATE OF TEXAS
RYAN D. LEWIS
95767
LICENSED PROFESSIONAL ENGINEER
4/28/23

100% SUBMITTAL

Project No.:	36179.002
Issued:	4/28/2023
Drawn By:	MH
Checked By:	BC
Scale:	1"=60'

Sheet Title
SUE- EXISTING UTILITY LAYOUT

466
Sheet Number

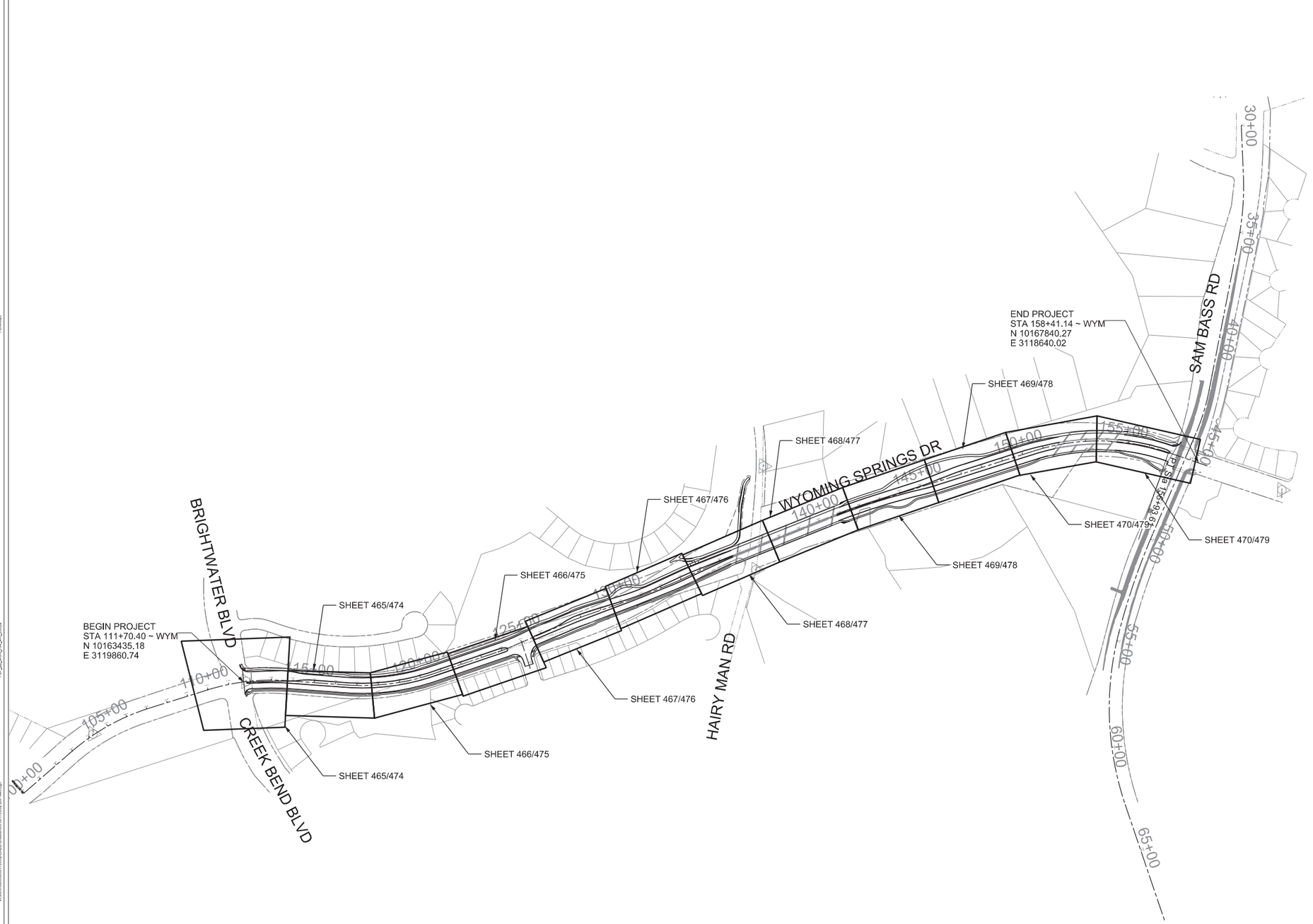

WYOMING SPRINGS
SEGMENT 1
ROUND ROCK, TX

ROUND ROCK
TEXAS

halff
13620 BRANTWICK DRIVE
BLDG C, STE 1000
AUSTIN, TX 78729
(512) 777-4600
TBPELS FIRM #312

Revision No.	Date	Description

REGISTERED LANDSCAPE ARCHITECT
TOBIN L. FOX
2680
STATE OF TEXAS

04/05/2023

100% SUBMITTAL

Project No.:	36179.002
Issued:	4/7/2023
Drawn By:	WC
Checked By:	TF
Scale:	

Sheet Title
PROJECT LAYOUT

467
Sheet Number

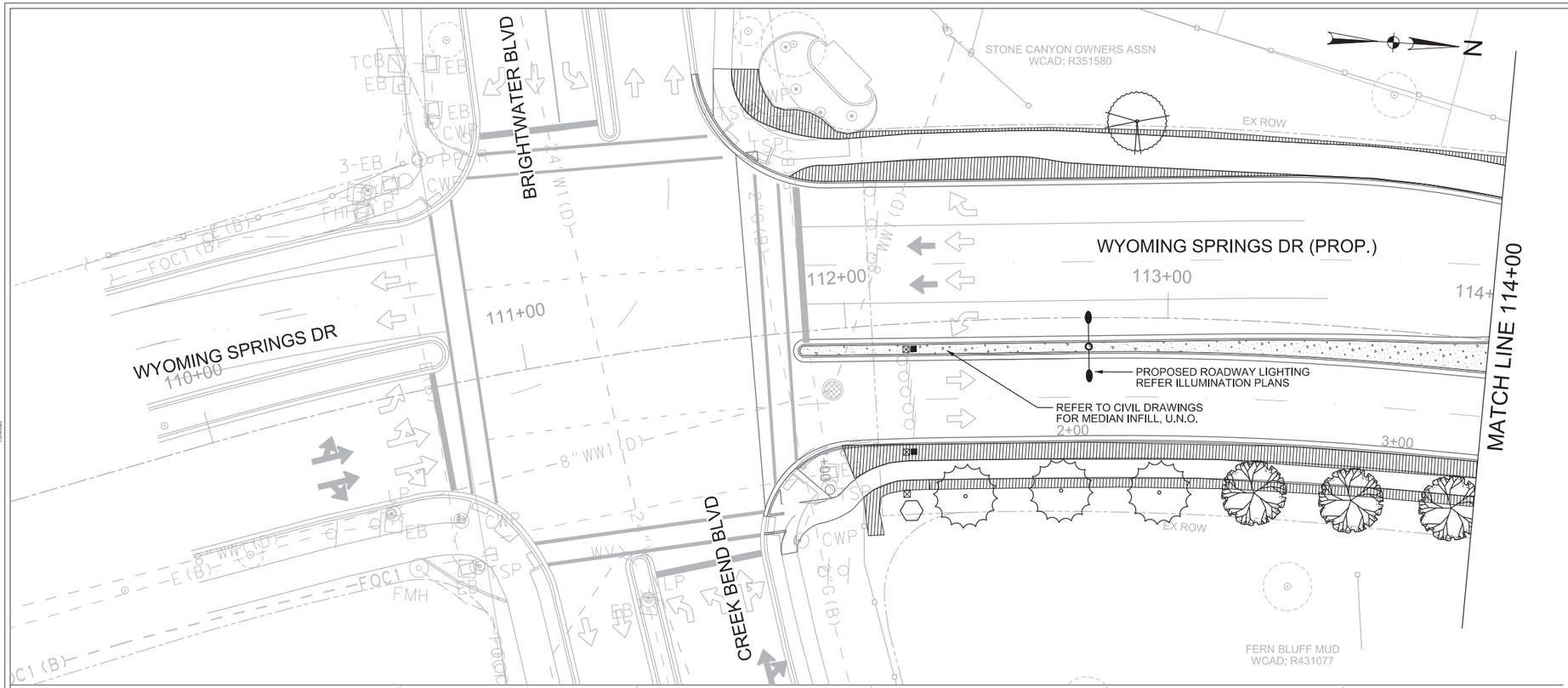

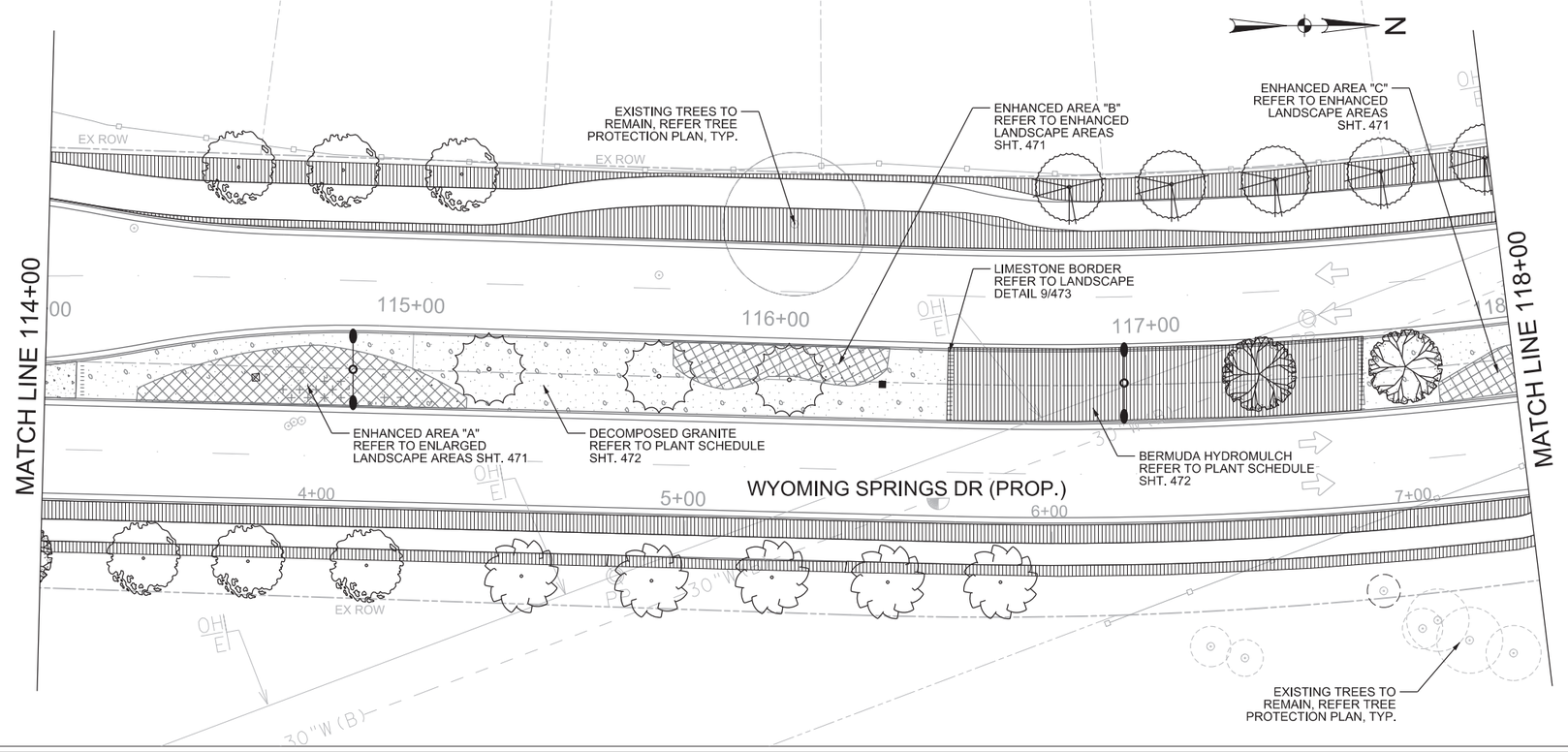

0 20 40 60 80

SCALE: 1"=40'

NOTES

1. REFER TO CIVIL DRAWINGS FOR PROPOSED / EXISTING HARDSCAPE CONDITIONS.
2. PROPOSED TREES THAT MIGHT BE PLACED IN PROXIMITY TO UTILITIES SHALL ADHERE TO CITY STANDARDS. ANY PROPOSED TREE THAT MIGHT BE PLACED IN PROXIMITY TO A NON-UNDERGROUND UTILITY SHALL ADHERE TO THE STANDARDS CONTAINED IN THE AE DESIGN CRITERIA MANUAL.
3. PROPOSED TREES IN PROXIMITY TO OVERHEAD UTILITIES TO USE UTILITY COMPATIBLE TREES AS IDENTIFIED IN THE CITY'S OVERHEAD UTILITY COMPATIBLE TREE LIST.
4. ENHANCED LANDSCAPE AREAS ARE ASSUMED TO CONTAIN ANY COMBINATION OR QUANTITY OF LARGE, MEDIUM AND/OR SMALL-SIZED TREES (FOUND IN APPENDIX F OF THE ECM).
5. NO PROPOSED TREES TO BE PLANTED WITHIN MIN. 25' OF THE DRIP LINE OF PRESERVED EXISTING TREES. WHEN PLANTING NEW TREES, UTILIZE APPROPRIATE SPECIES TO AVOID POTENTIAL SPACE CONFLICTS.
6. ANY TREE PLANTED IN ENHANCED LANDSCAPE AREAS SHALL BE IN COMPLIANCE WITH THE TRANSPORTATION GUIDELINES FOR LANDSCAPING IN THE TRANSPORTATION CRITERIA MANUAL.

PLANT SCHEDULE	
TREES / DECIDUOUS	BOTANICAL / COMMON NAME
	Quercus polymorpha 'Monterey' / Monterey Oak
	Quercus virginiana / Southern Live Oak
TREES / FLOWERING	BOTANICAL / COMMON NAME
	Ilex decidua / Possumhaw
	Lagerstroemia indica 'Red' / Red Crape Myrtle
	Sophora secundiflora / Texas Mountain Laurel

WYOMING SPRINGS
SEGMENT 1
ROUND ROCK, TX

ROUND ROCK
TEXAS

halff
13620 BRANTWICK DRIVE
BLDG C, STE 200
AUSTIN, TX 78729
(512) 777-4600
TBPELS FIRM #312

Revision No.	Date	Description

REGISTERED LANDSCAPE ARCHITECT
TOBIN L. FOX
2680
STATE OF TEXAS

04/05/2023

100% SUBMITTAL

811
Know what's **below.**
Call before you dig.

THE INFORMATION SHOWN ON THESE DRAWINGS INDICATING SIZE, TYPE AND LOCATION OF UNDERGROUND, SURFACE, AND AERIAL UTILITIES IS NOT GUARANTEED TO BE EXACT OR COMPLETE. THE CONTRACTOR SHALL CONTACT THE ROUND ROCK AREA "ONE CALL" SYSTEM AT 1-800-344-8377 (DIG TESS) 48 HOURS PRIOR TO BEGINNING ANY EXCAVATION FOR EXISTING UTILITY LOCATIONS. THE CONTRACTOR SHALL ALSO BE FULLY RESPONSIBLE FOR FIELD VERIFYING LOCATIONS AND ELEVATIONS OF ALL EXISTING UTILITIES AFFECTED BY CONSTRUCTION FOR THIS PROJECT IN ORDER TO AVOID DAMAGING THOSE UTILITIES, AND SHALL IMMEDIATELY ARRANGE FOR REPAIR AND RESTORATION OF CONTRACTOR-DAMAGED UTILITIES TO THE UTILITY COMPANY'S APPROVAL AT THE EXPENSE OF THE CONTRACTOR.

Project No.:	36179
Issued:	4/7/2023
Drawn By:	WC
Checked By:	TF
Scale:	1"=40'

Sheet Title

LANDSCAPE PLAN
SHEET 1 OF 6

468

Sheet Number

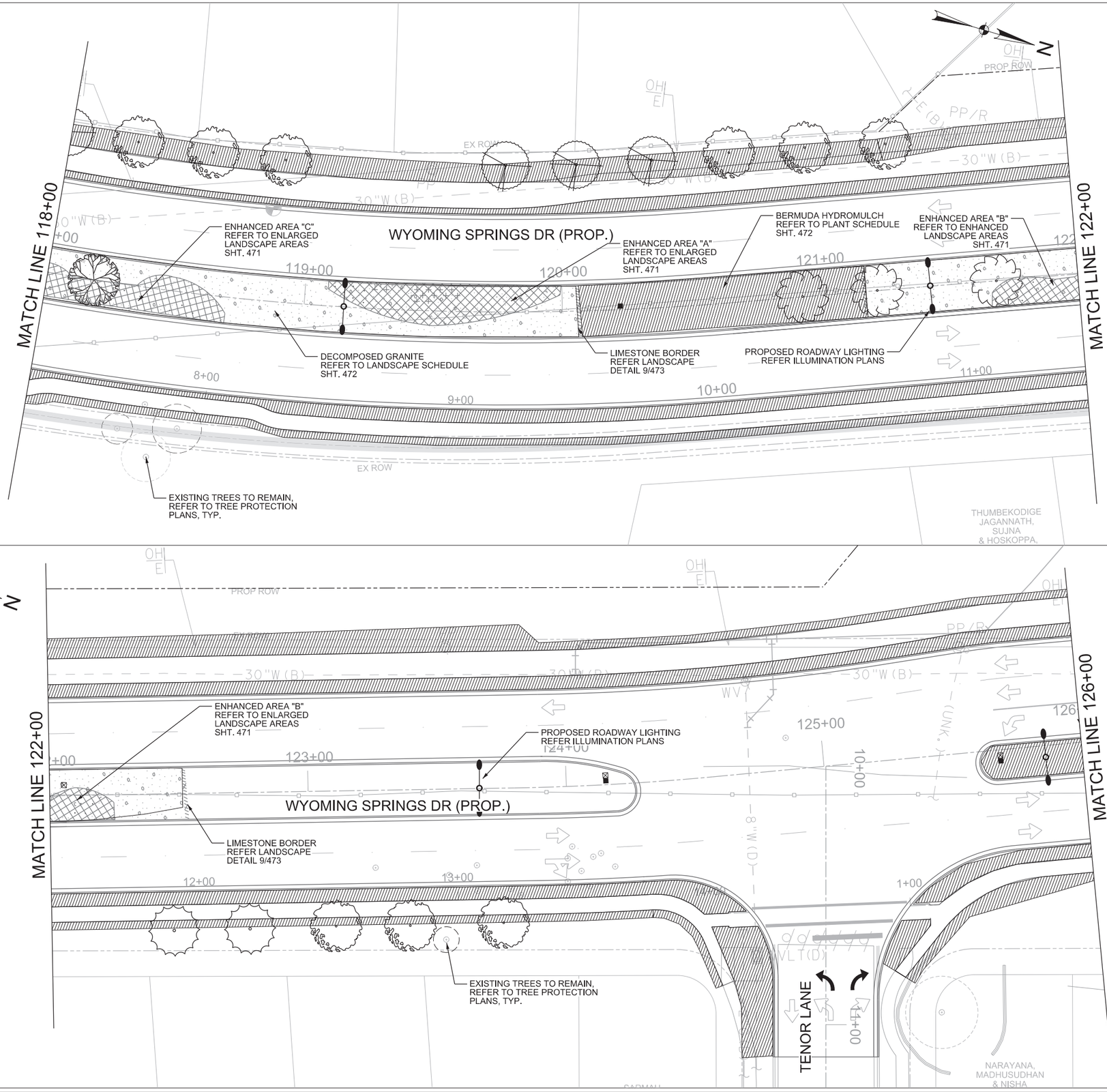

0 20 40 60 80

SCALE: 1"=40'

NOTES

1. REFER TO CIVIL DRAWINGS FOR PROPOSED / EXISTING HARDSCAPE CONDITIONS.
2. PROPOSED TREES THAT MIGHT BE PLACED IN PROXIMITY TO UTILITIES SHALL ADHERE TO CITY STANDARDS. ANY PROPOSED TREE THAT MIGHT BE PLACED IN PROXIMITY TO A NON-UNDERGROUND UTILITY SHALL ADHERE TO THE STANDARDS CONTAINED IN THE AE DESIGN CRITERIA MANUAL.
3. PROPOSED TREES IN PROXIMITY TO OVERHEAD UTILITIES TO USE UTILITY COMPATIBLE TREES AS IDENTIFIED IN THE CITY'S OVERHEAD UTILITY COMPATIBLE TREE LIST.
4. ENHANCED LANDSCAPE AREAS ARE ASSUMED TO CONTAIN ANY COMBINATION OR QUANTITY OF LARGE, MEDIUM AND/OR SMALL-SIZED TREES (FOUND IN APPENDIX F OF THE ECM).
5. NO PROPOSED TREES TO BE PLANTED WITHIN MIN. 25' OF THE DRIP LINE OF PRESERVED EXISTING TREES. WHEN PLANTING NEW TREES, UTILIZE APPROPRIATE SPECIES TO AVOID POTENTIAL SPACE CONFLICTS.
6. ANY TREE PLANTED IN ENHANCED LANDSCAPE AREAS SHALL BE IN COMPLIANCE WITH THE TRANSPORTATION GUIDELINES FOR LANDSCAPING IN THE TRANSPORTATION CRITERIA MANUAL.

PLANT SCHEDULE

TREES / DECIDUOUS	BOTANICAL / COMMON NAME
	Quercus polymorpha 'Monterey' / Monterey Oak
	Quercus virginiana / Southern Live Oak
TREES / FLOWERING	**BOTANICAL / COMMON NAME**
	Ilex decidua / Possumhaw
	Lagerstroemia Indica 'Red' / Red Crape Myrtle
	Sophora secundiflora / Texas Mountain Laurel

WYOMING SPRINGS
SEGMENT 1
ROUND ROCK, TX

ROUND ROCK TEXAS

halff
13620 BRANTWICK DRIVE
BLDG C, STE 1000
AUSTIN, TX 78729
(512) 777-4600
TBPELS FIRM #312

Revision No.	Date	Description

REGISTERED LANDSCAPE ARCHITECT TOBIN L. FOX 2680 STATE OF TEXAS

04/05/2023

100% SUBMITTAL

811 Know what's below. Call before you dig.

THE INFORMATION SHOWN ON THESE DRAWINGS INDICATING SIZE, TYPE AND LOCATION OF UNDERGROUND, SURFACE, AND AERIAL UTILITIES IS NOT GUARANTEED TO BE EXACT OR COMPLETE. THE CONTRACTOR SHALL CONTACT THE ROUND ROCK AREA "ONE CALL" SYSTEM AT 1-800-344-8377 (DIG TESS) 48 HOURS PRIOR TO BEGINNING ANY EXCAVATION FOR EXISTING UTILITY LOCATIONS. THE CONTRACTOR SHALL ALSO BE FULLY RESPONSIBLE FOR FIELD VERIFYING LOCATIONS AND ELEVATIONS OF ALL EXISTING UTILITIES AFFECTED BY CONSTRUCTION FOR THIS PROJECT IN ORDER TO AVOID DAMAGING THOSE UTILITIES, AND SHALL IMMEDIATELY ARRANGE FOR REPAIR AND RESTORATION OF CONTRACTOR-DAMAGED UTILITIES TO THE UTILITY COMPANY'S APPROVAL AT THE EXPENSE OF THE CONTRACTOR.

Project No.:	36179
Issued:	4/7/2023
Drawn By:	WC
Checked By:	TF
Scale:	1"=40'

Sheet Title

LANDSCAPE PLAN
SHEET 2 OF 6

469

Sheet Number

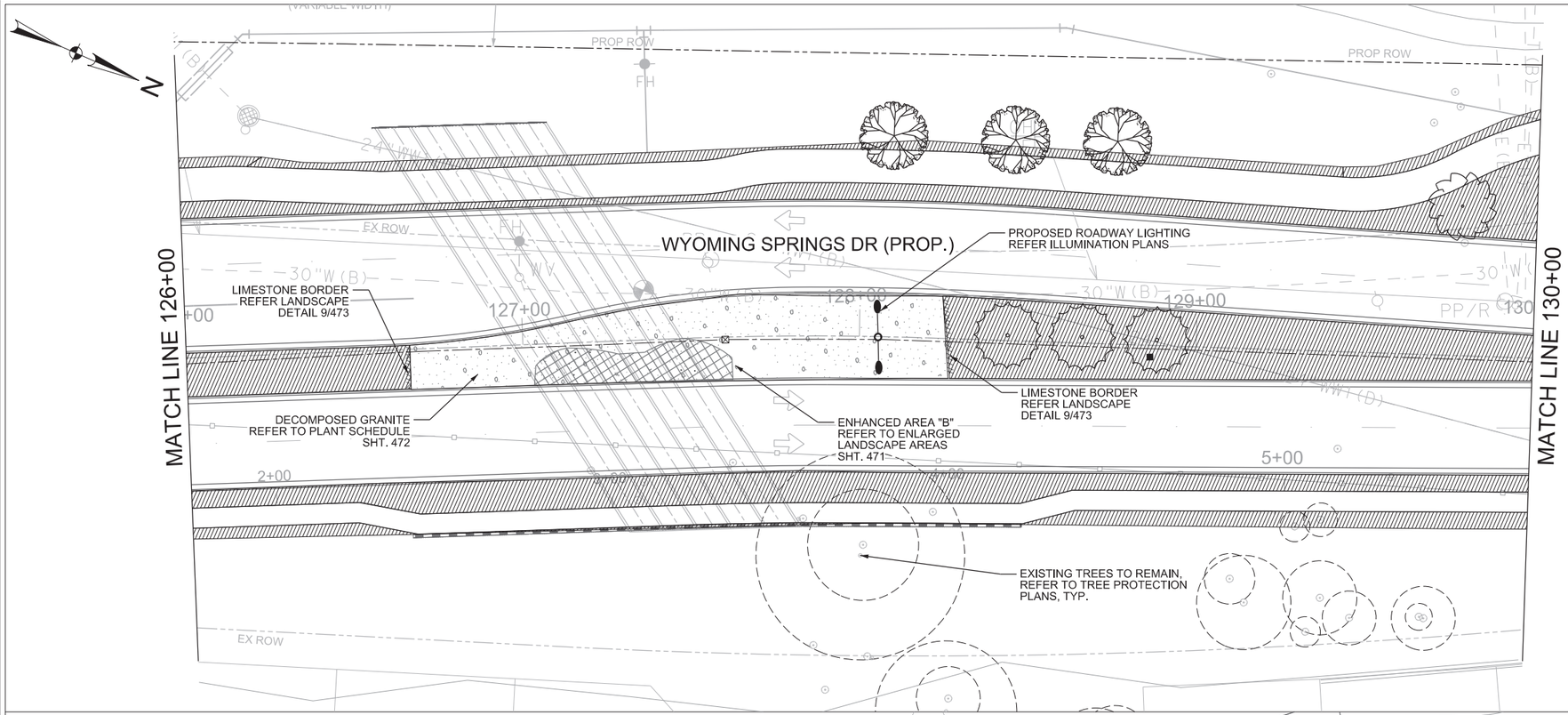

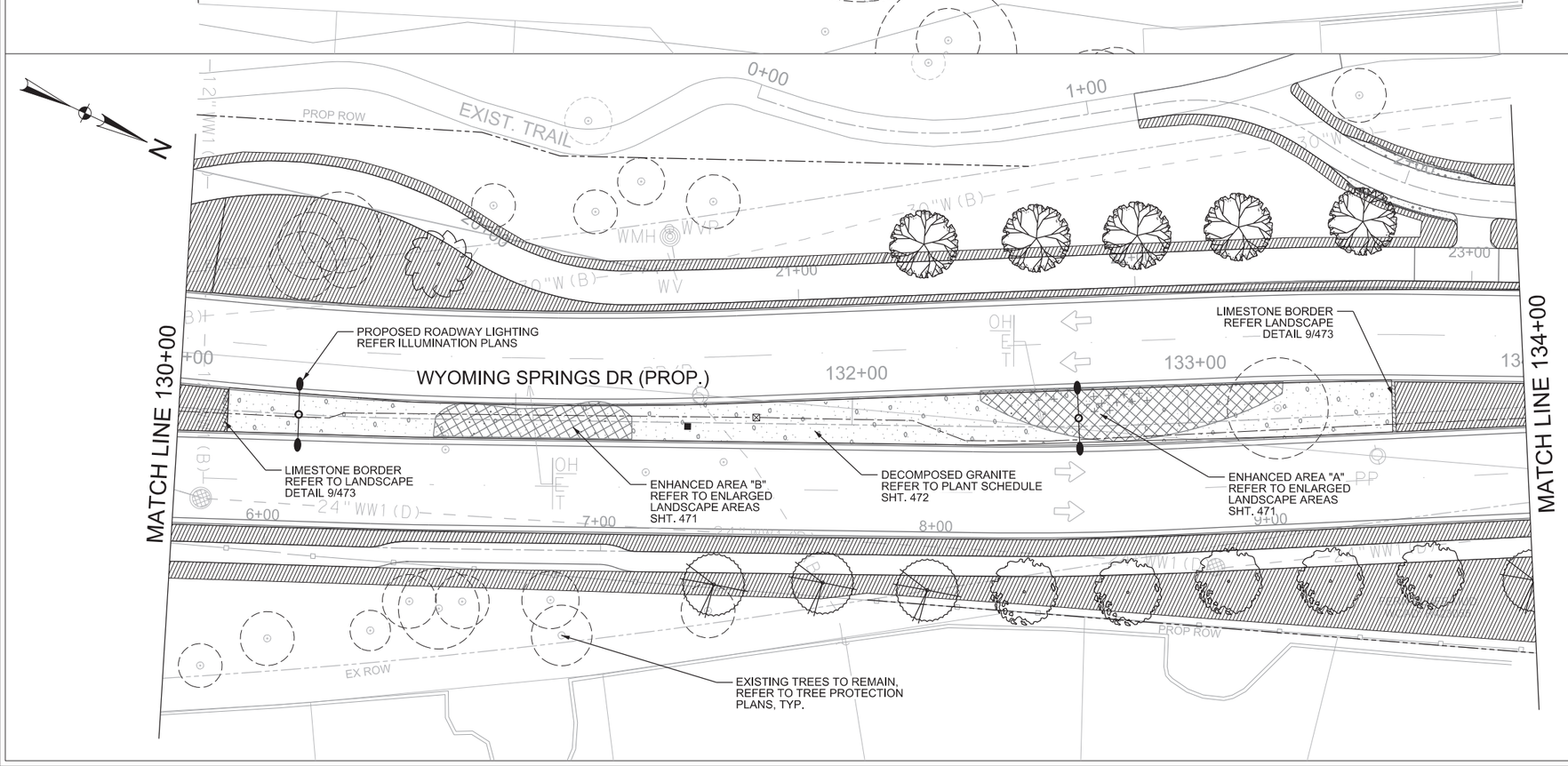

0 20 40 60 80

SCALE: 1"=40'

NOTES

1. REFER TO CIVIL DRAWINGS FOR PROPOSED / EXISTING HARDSCAPE CONDITIONS.
2. PROPOSED TREES THAT MIGHT BE PLACED IN PROXIMITY TO UTILITIES SHALL ADHERE TO CITY STANDARDS. ANY PROPOSED TREE THAT MIGHT BE PLACED IN PROXIMITY TO A NON-UNDERGROUND UTILITY SHALL ADHERE TO THE STANDARDS CONTAINED IN THE AE DESIGN CRITERIA MANUAL.
3. PROPOSED TREES IN PROXIMITY TO OVERHEAD UTILITIES TO USE UTILITY COMPATIBLE TREES AS IDENTIFIED IN THE CITY'S OVERHEAD UTILITY COMPATIBLE TREE LIST.
4. ENHANCED LANDSCAPE AREAS ARE ASSUMED TO CONTAIN ANY COMBINATION OR QUANTITY OF LARGE, MEDIUM AND/OR SMALL-SIZED TREES (FOUND IN APPENDIX F OF THE ECM).
5. NO PROPOSED TREES TO BE PLANTED WITHIN MIN. 25' OF THE DRIP LINE OF PRESERVED EXISTING TREES. WHEN PLANTING NEW TREES, UTILIZE APPROPRIATE SPECIES TO AVOID POTENTIAL SPACE CONFLICTS.
6. ANY TREE PLANTED IN ENHANCED LANDSCAPE AREAS SHALL BE IN COMPLIANCE WITH THE TRANSPORTATION GUIDELINES FOR LANDSCAPING IN THE TRANSPORTATION CRITERIA MANUAL.

PLANT SCHEDULE

TREES / DECIDUOUS	BOTANICAL / COMMON NAME
	Quercus polymorpha 'Monterey' / Monterey Oak
	Quercus virginiana / Southern Live Oak
TREES / FLOWERING	**BOTANICAL / COMMON NAME**
	Ilex decidua / Possumhaw
	Lagerstroemia Indica 'Red' / Red Crape Myrtle
	Sophora secundiflora / Texas Mountain Laurel

WYOMING SPRINGS
SEGMENT 1
ROUND ROCK, TX

ROUND ROCK
TEXAS

halff
13620 BRAKWICK DRIVE
BLDG C, STE 1000
AUSTIN, TX 78729
(512) 777-4600
TBPELS FIRM #312

Revision No.	Date	Description

REGISTERED LANDSCAPE ARCHITECT
TOBIN L. FOX
5680
STATE OF TEXAS

04/05/2023

100% SUBMITTAL

811
Know what's **below.**
Call before you dig.

THE INFORMATION SHOWN ON THESE DRAWINGS INDICATING SIZE, TYPE AND LOCATION OF UNDERGROUND, SURFACE, AND AERIAL UTILITIES IS NOT GUARANTEED TO BE EXACT OR COMPLETE. THE CONTRACTOR SHALL CONTACT THE ROUND ROCK AREA "ONE CALL" SYSTEM AT 1-800-344-8377 (DIG TESS) 48 HOURS PRIOR TO BEGINNING ANY EXCAVATION FOR EXISTING UTILITY LOCATIONS. THE CONTRACTOR SHALL ALSO BE FULLY RESPONSIBLE FOR FIELD VERIFYING LOCATIONS AND ELEVATIONS OF ALL EXISTING UTILITIES AFFECTED BY CONSTRUCTION FOR THIS PROJECT IN ORDER TO AVOID DAMAGING THOSE UTILITIES, AND SHALL IMMEDIATELY ARRANGE FOR REPAIR AND RESTORATION OF CONTRACTOR-DAMAGED UTILITIES TO THE UTILITY COMPANY'S APPROVAL AT THE EXPENSE OF THE CONTRACTOR.

Project No.:	36179
Issued:	4/7/2023
Drawn By:	WC
Checked By:	TF
Scale:	1"=40'

Sheet Title

LANDSCAPE PLAN
SHEET 3 OF 6

470

Sheet Number

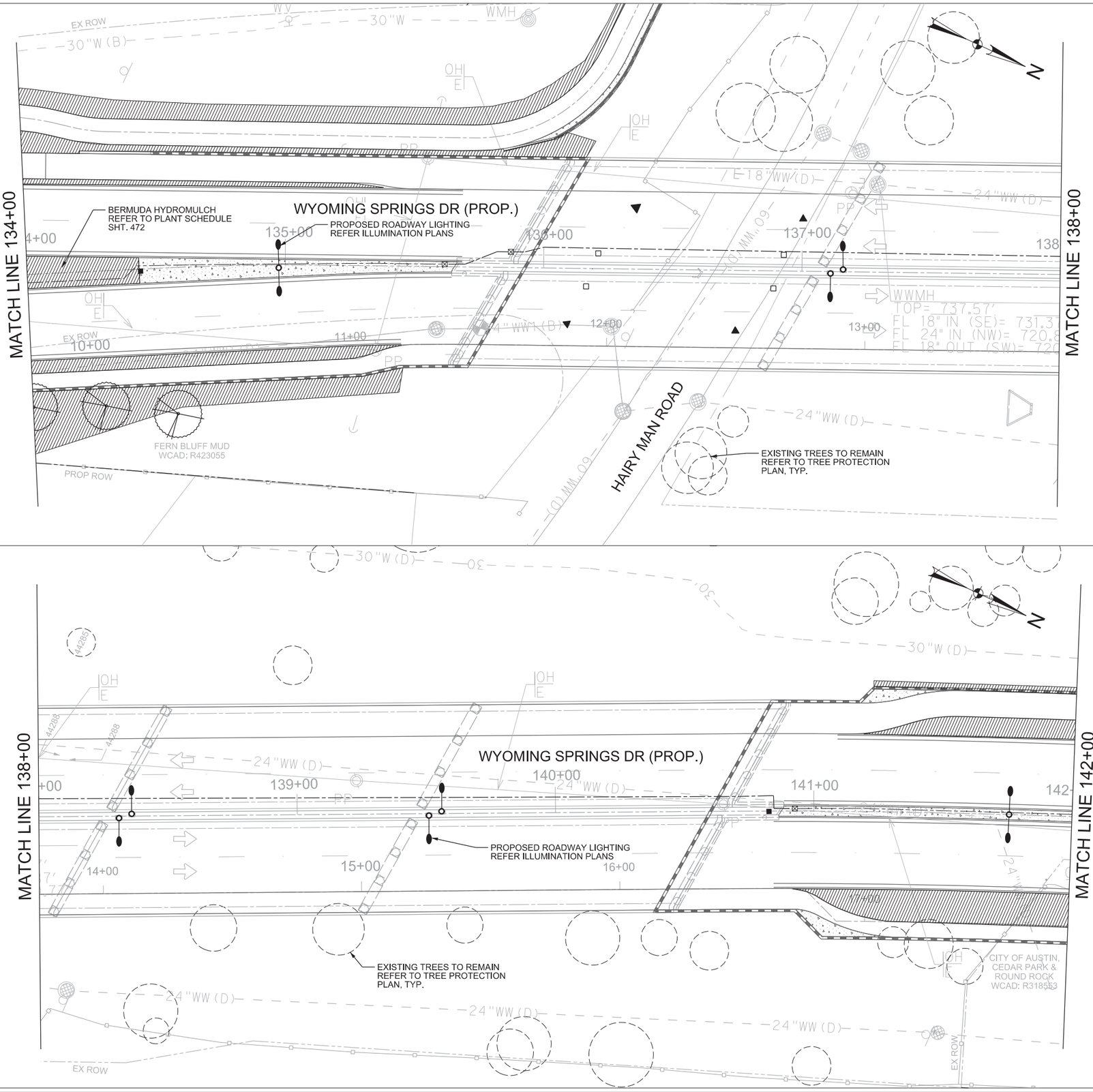

0 20 40 60 80

SCALE: 1"=40'

NOTES

1. REFER TO CIVIL DRAWINGS FOR PROPOSED / EXISTING HARDSCAPE CONDITIONS.
2. PROPOSED TREES THAT MIGHT BE PLACED IN PROXIMITY TO UTILITIES SHALL ADHERE TO CITY STANDARDS. ANY PROPOSED TREE THAT MIGHT BE PLACED IN PROXIMITY TO A NON-UNDERGROUND UTILITY SHALL ADHERE TO THE STANDARDS CONTAINED IN THE AE DESIGN CRITERIA MANUAL.
3. PROPOSED TREES IN PROXIMITY TO OVERHEAD UTILITIES TO USE UTILITY COMPATIBLE TREES AS IDENTIFIED IN THE CITY'S OVERHEAD UTILITY COMPATIBLE TREE LIST.
4. ENHANCED LANDSCAPE AREAS ARE ASSUMED TO CONTAIN ANY COMBINATION OR QUANTITY OF LARGE, MEDIUM AND/OR SMALL-SIZED TREES (FOUND IN APPENDIX F OF THE ECM).
5. NO PROPOSED TREES TO BE PLANTED WITHIN MIN. 25' OF THE DRIP LINE OF PRESERVED EXISTING TREES. WHEN PLANTING NEW TREES, UTILIZE APPROPRIATE SPECIES TO AVOID POTENTIAL SPACE CONFLICTS.
6. ANY TREE PLANTED IN ENHANCED LANDSCAPE AREAS SHALL BE IN COMPLIANCE WITH THE TRANSPORTATION GUIDELINES FOR LANDSCAPING IN THE TRANSPORTATION CRITERIA MANUAL.

WYOMING SPRINGS
SEGMENT 1
ROUND ROCK, TX

ROUND ROCK
TEXAS

halff
13620 BRIARWICK DRIVE
BLDG C, STE 200
AUSTIN, TX 78729
(512) 777-4600
TBPELS FIRM #312

Revision No.	Date	Description

REGISTERED LANDSCAPE ARCHITECT
TOBIN L. FOX
2680
STATE OF TEXAS
04/05/2023

811
Know what's **below.**
Call before you dig.

THE INFORMATION SHOWN ON THESE DRAWINGS INDICATING SIZE, TYPE AND LOCATION OF UNDERGROUND, SURFACE, AND AERIAL UTILITIES IS NOT GUARANTEED TO BE EXACT OR COMPLETE. THE CONTRACTOR SHALL CONTACT THE ROUND ROCK AREA "ONE CALL" SYSTEM AT 1-800-344-8377 (DIG TESS) 48 HOURS PRIOR TO BEGINNING ANY EXCAVATION FOR EXISTING UTILITY LOCATIONS. THE CONTRACTOR SHALL ALSO BE FULLY RESPONSIBLE FOR FIELD VERIFYING LOCATIONS AND ELEVATIONS OF ALL EXISTING UTILITIES AFFECTED BY CONSTRUCTION FOR THIS PROJECT IN ORDER TO AVOID DAMAGING THOSE UTILITIES, AND SHALL IMMEDIATELY ARRANGE FOR REPAIR AND RESTORATION OF CONTRACTOR-DAMAGED UTILITIES TO THE UTILITY COMPANY'S APPROVAL AT THE EXPENSE OF THE CONTRACTOR.

100% SUBMITTAL

Project No.:	36179
Issued:	4/7/2023
Drawn By:	WC
Checked By:	TF
Scale:	1"=40'

Sheet Title

LANDSCAPE PLAN
SHEET 4 OF 6

471

Sheet Number

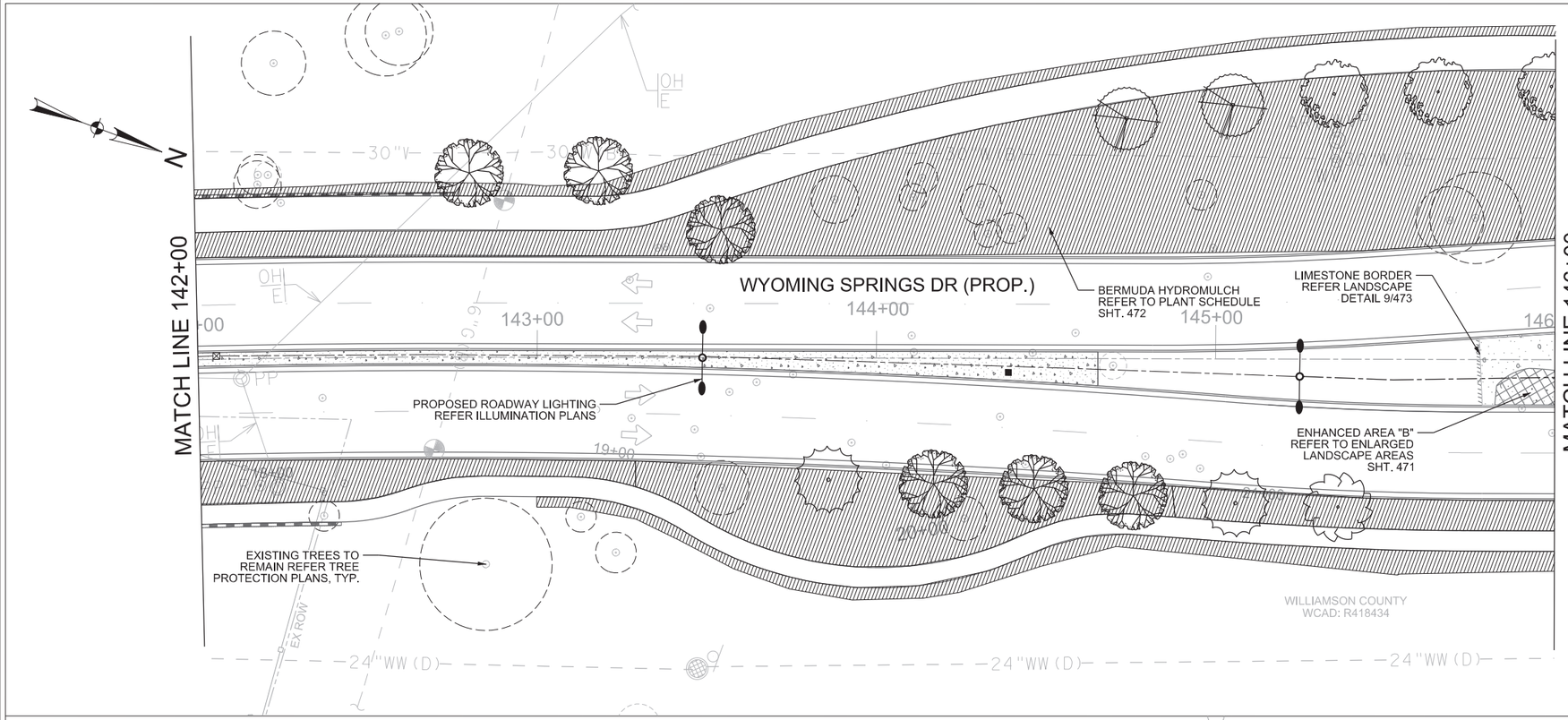

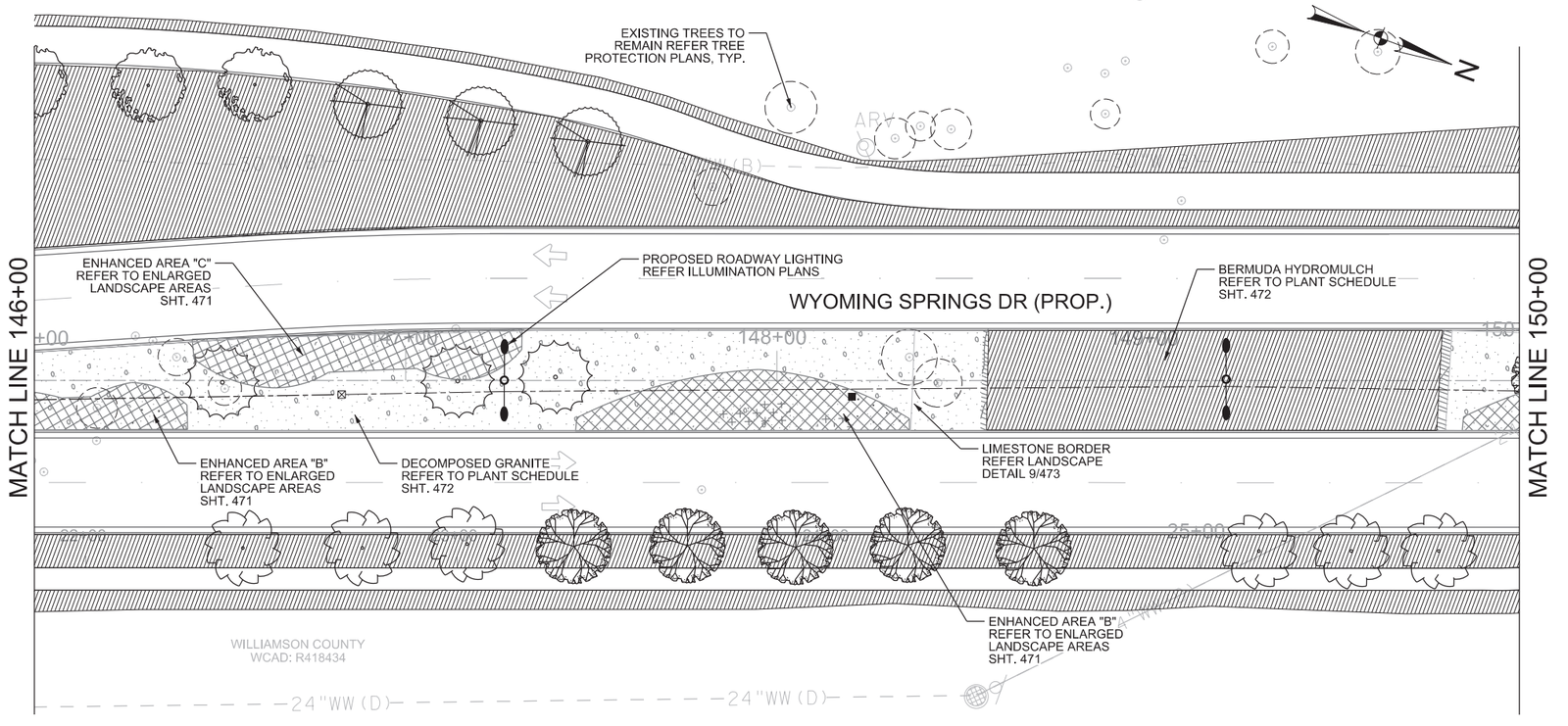

0 20 40 60 80

SCALE: 1"=40'

NOTES

1. REFER TO CIVIL DRAWINGS FOR PROPOSED / EXISTING HARDSCAPE CONDITIONS.
2. PROPOSED TREES THAT MIGHT BE PLACED IN PROXIMITY TO UTILITIES SHALL ADHERE TO CITY STANDARDS. ANY PROPOSED TREE THAT MIGHT BE PLACED IN PROXIMITY TO A NON-UNDERGROUND UTILITY SHALL ADHERE TO THE STANDARDS CONTAINED IN THE AE DESIGN CRITERIA MANUAL.
3. PROPOSED TREES IN PROXIMITY TO OVERHEAD UTILITIES TO USE UTILITY COMPATIBLE TREES AS IDENTIFIED IN THE CITY'S OVERHEAD UTILITY COMPATIBLE TREE LIST.
4. ENHANCED LANDSCAPE AREAS ARE ASSUMED TO CONTAIN ANY COMBINATION OR QUANTITY OF LARGE, MEDIUM AND/OR SMALL-SIZED TREES (FOUND IN APPENDIX F OF THE ECM).
5. NO PROPOSED TREES TO BE PLANTED WITHIN MIN. 25' OF THE DRIP LINE OF PRESERVED EXISTING TREES. WHEN PLANTING NEW TREES, UTILIZE APPROPRIATE SPECIES TO AVOID POTENTIAL SPACE CONFLICTS.
6. ANY TREE PLANTED IN ENHANCED LANDSCAPE AREAS SHALL BE IN COMPLIANCE WITH THE TRANSPORTATION GUIDELINES FOR LANDSCAPING IN THE TRANSPORTATION CRITERIA MANUAL.

PLANT SCHEDULE

TREES / DECIDUOUS	BOTANICAL / COMMON NAME
	Quercus polymorpha 'Monterey' / Monterey Oak
	Quercus virginiana / Southern Live Oak
TREES / FLOWERING	**BOTANICAL / COMMON NAME**
	Ilex decidua / Possumhaw
	Lagerstroemia Indica 'Red' / Red Crape Myrtle
	Sophora secundiflora / Texas Mountain Laurel

WYOMING SPRINGS
SEGMENT 1
ROUND ROCK, TX

ROUND ROCK
TEXAS

halff
13620 BRAKMOCK DRIVE
BLDG C, SUITE 200
AUSTIN, TX 78729
(512) 777-4600
TBPELS FIRM #312

Revision No.	Date	Description

REGISTERED LANDSCAPE ARCHITECT
TOBIN L. FOX
2680
STATE OF TEXAS

04/05/2023

100% SUBMITTAL

811
Know what's **below.**
Call before you dig.

THE INFORMATION SHOWN ON THESE DRAWINGS INDICATING SIZE, TYPE AND LOCATION OF UNDERGROUND, SURFACE, AND AERIAL UTILITIES IS NOT GUARANTEED TO BE EXACT OR COMPLETE. THE CONTRACTOR SHALL CONTACT THE ROUND ROCK AREA "ONE CALL" SYSTEM AT 1-800-344-8377 (DIG TESS) 48 HOURS PRIOR TO BEGINNING ANY EXCAVATION FOR EXISTING UTILITY LOCATIONS. THE CONTRACTOR SHALL ALSO BE FULLY RESPONSIBLE FOR FIELD VERIFYING LOCATIONS AND ELEVATIONS OF ALL EXISTING UTILITIES AFFECTED BY CONSTRUCTION FOR THIS PROJECT IN ORDER TO AVOID DAMAGING THOSE UTILITIES, AND SHALL IMMEDIATELY ARRANGE FOR REPAIR AND RESTORATION OF CONTRACTOR-DAMAGED UTILITIES TO THE UTILITY COMPANY'S APPROVAL AT THE EXPENSE OF THE CONTRACTOR.

Project No.:	36179
Issued:	4/7/2023
Drawn By:	WC
Checked By:	TF
Scale:	1"=40'

Sheet Title

LANDSCAPE PLAN
SHEET 5 OF 6

472

Sheet Number

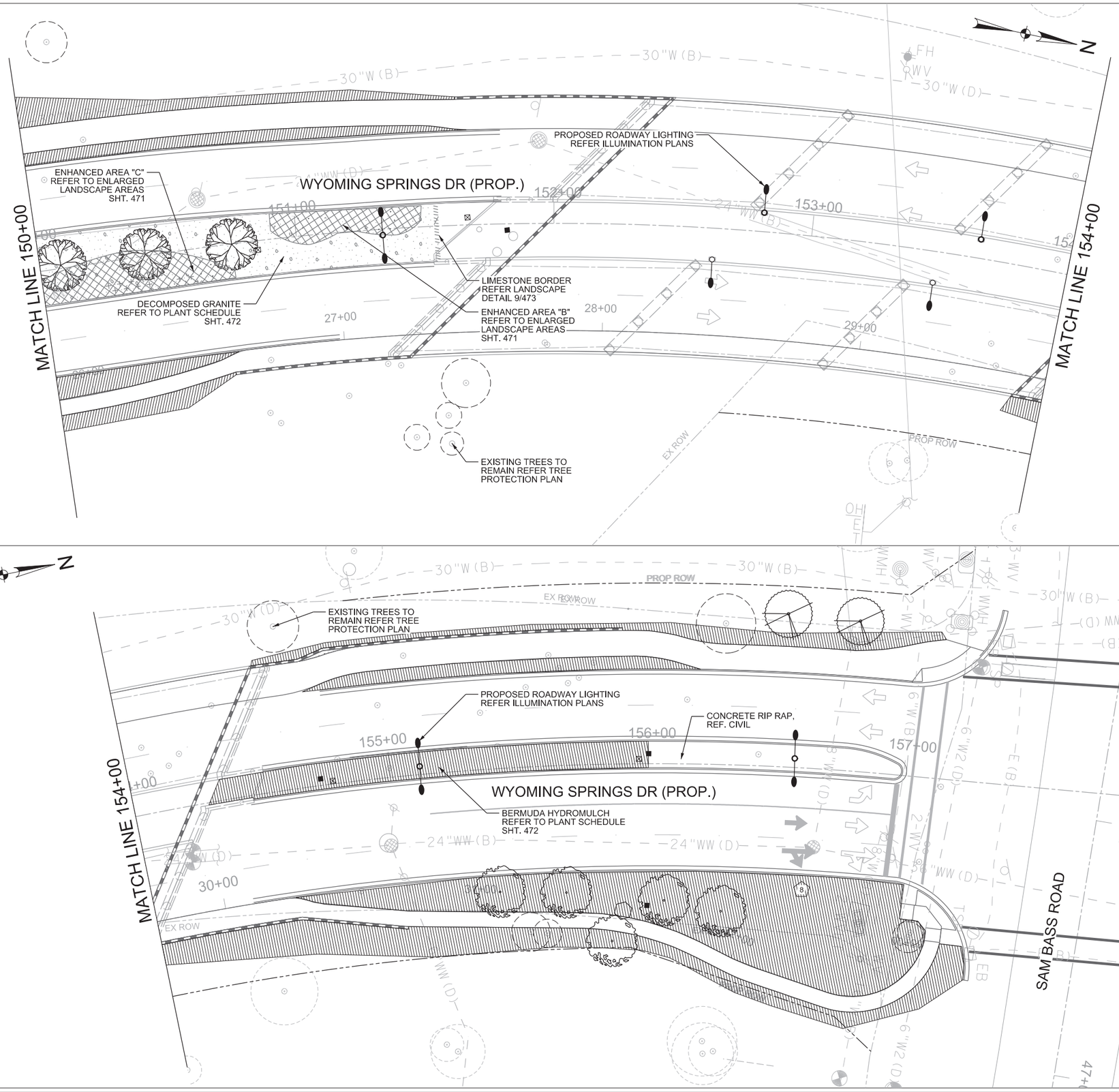

0 20 40 60 80

SCALE: 1"=40'

NOTES

1. REFER TO CIVIL DRAWINGS FOR PROPOSED / EXISTING HARDSCAPE CONDITIONS.
2. PROPOSED TREES THAT MIGHT BE PLACED IN PROXIMITY TO UTILITIES SHALL ADHERE TO CITY STANDARDS. ANY PROPOSED TREE THAT MIGHT BE PLACED IN PROXIMITY TO A NON-UNDERGROUND UTILITY SHALL ADHERE TO THE STANDARDS CONTAINED IN THE AE DESIGN CRITERIA MANUAL.
3. PROPOSED TREES IN PROXIMITY TO OVERHEAD UTILITIES TO USE UTILITY COMPATIBLE TREES AS IDENTIFIED IN THE CITY'S OVERHEAD UTILITY COMPATIBLE TREE LIST.
4. ENHANCED LANDSCAPE AREAS ARE ASSUMED TO CONTAIN ANY COMBINATION OR QUANTITY OF LARGE, MEDIUM AND/OR SMALL-SIZED TREES (FOUND IN APPENDIX F OF THE ECM).
5. NO PROPOSED TREES TO BE PLANTED WITHIN MIN. 25' OF THE DRIP LINE OF PRESERVED EXISTING TREES. WHEN PLANTING NEW TREES, UTILIZE APPROPRIATE SPECIES TO AVOID POTENTIAL SPACE CONFLICTS.
6. ANY TREE PLANTED IN ENHANCED LANDSCAPE AREAS SHALL BE IN COMPLIANCE WITH THE TRANSPORTATION GUIDELINES FOR LANDSCAPING IN THE TRANSPORTATION CRITERIA MANUAL.

PLANT SCHEDULE

TREES / DECIDUOUS	BOTANICAL / COMMON NAME
	Quercus polymorpha 'Monterey' / Monterey Oak
	Quercus virginiana / Southern Live Oak
TREES / FLOWERING	**BOTANICAL / COMMON NAME**
	Ilex decidua / Possumhaw
	Lagerstroemia indica 'Red' / Red Crape Myrtle
	Sophora secundiflora / Texas Mountain Laurel

WYOMING SPRINGS
SEGMENT 1
ROUND ROCK, TX

ROUND ROCK
TEXAS

halff
13620 BRIARWICK DRIVE
BLDG C, STE 1000
AUSTIN, TX 78729
(512) 777-4600
TBPELS FIRM #312

Revision No.	Date	Description

REGISTERED LANDSCAPE ARCHITECT
TOBIN L. FOX
2680
STATE OF TEXAS

04/05/2023

100% SUBMITTAL

811
Know what's **below.**
Call before you dig.

THE INFORMATION SHOWN ON THESE DRAWINGS INDICATING SIZE, TYPE AND LOCATION OF UNDERGROUND, SURFACE, AND AERIAL UTILITIES IS NOT GUARANTEED TO BE EXACT OR COMPLETE. THE CONTRACTOR SHALL CONTACT THE ROUND ROCK AREA "ONE CALL" SYSTEM AT 1-800-344-8377 (DIG TESS) 48 HOURS PRIOR TO BEGINNING ANY EXCAVATION FOR EXISTING UTILITY LOCATIONS. THE CONTRACTOR SHALL ALSO BE FULLY RESPONSIBLE FOR FIELD VERIFYING LOCATIONS AND ELEVATIONS OF ALL EXISTING UTILITIES AFFECTED BY CONSTRUCTION FOR THIS PROJECT IN ORDER TO AVOID DAMAGING THOSE UTILITIES, AND SHALL IMMEDIATELY ARRANGE FOR REPAIR AND RESTORATION OF CONTRACTOR-DAMAGED UTILITIES TO THE UTILITY COMPANY'S APPROVAL AT THE EXPENSE OF THE CONTRACTOR.

Project No.:	36179
Issued:	4/7/2023
Drawn By:	WC
Checked By:	TF
Scale:	1"=40'

Sheet Title

LANDSCAPE PLAN
SHEET 6 OF 6

473

Sheet Number

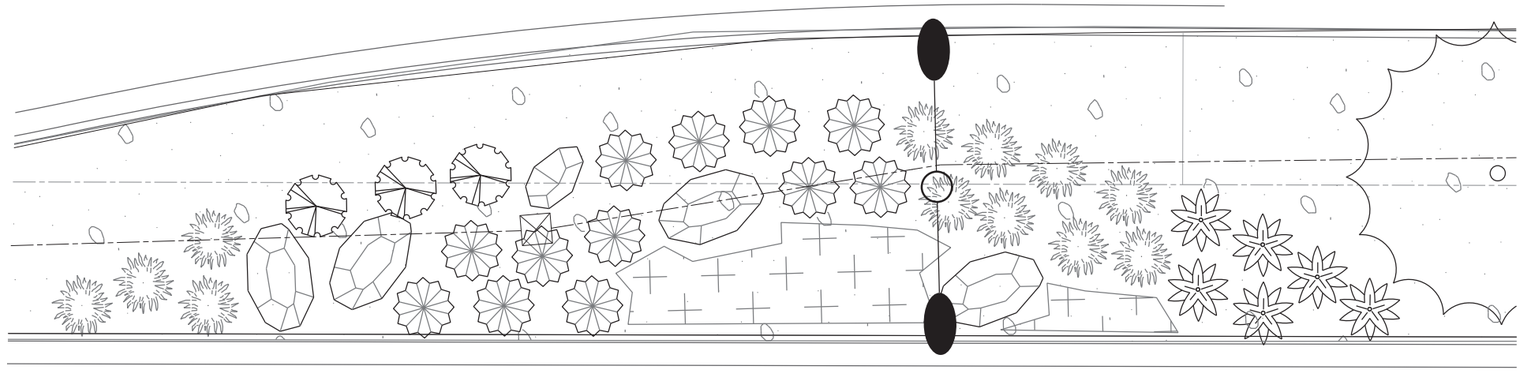

1 ENHANCED LANDSCAPE AREA "A"
SCALE = NTS

PLANT SCHEDULE PLANT AREA A						
ORNAMENTAL GRASSES	QTY	BOTANICAL / COMMON NAME	CONT	SPD		REMARKS
	12	Miscanthus sinensis 'Gracillimus' / Eulalia Grass	3 gal.	36" o.c.		
SHRUBS / DECIDUOUS	QTY	BOTANICAL / COMMON NAME	CONT	SPD		REMARKS
	6	Lantana montevidensis 'Purple' / Trailing Lantana- Purple	3 gal			
SHRUBS / EVERGREEN	QTY	BOTANICAL / COMMON NAME	CONT	SPD		REMARKS
	3	Callistemon citrinus / Lemon Bottlebrush	5 gal			
	12	Rosmarinus officinalis / Rosemary	5 gal.			
GROUND COVERS	QTY	BOTANICAL / COMMON NAME	CONT			
	133 sf	Melampodium leucanthum / Blackfoot Daisy	1 gal			
MISCELLANEOUS MATERIALS	QTY	BOTANICAL / COMMON NAME	CONT			
	119 sf	DECOMPOSED GRANITE	TON			

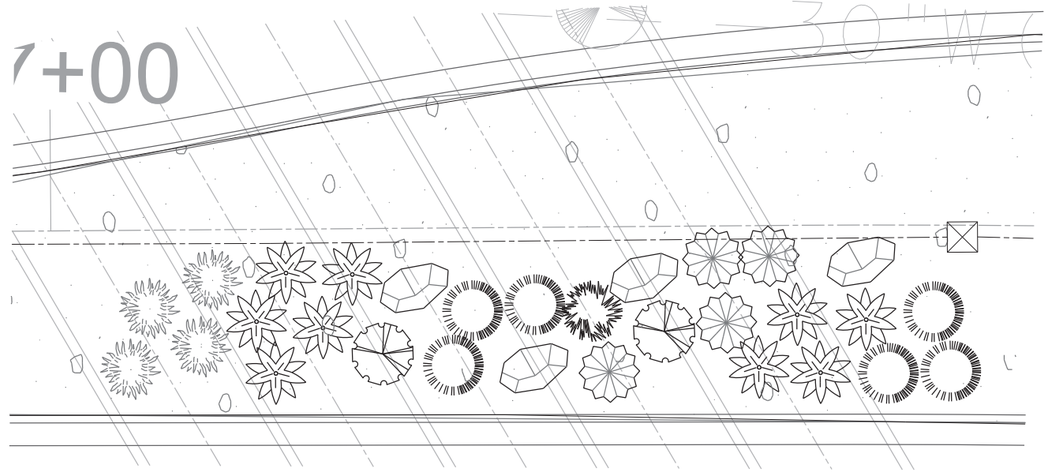

2 ENHANCED LANDSCAPE AREA "B"
SCALE = NTS

PLANT SCHEDULE PLANT AREA B						
ORNAMENTAL GRASSES	QTY	BOTANICAL / COMMON NAME	CONT	SPD		REMARKS
	4	Miscanthus sinensis 'Gracillimus' / Eulalia Grass	3 gal.	36" o.c.		
	6	Muhlenbergia capillaris 'Gulf Coast' / Gulf Coast Pink Muhly Grass	3 GAL.	2'-3' Spd		
SHRUBS / DECIDUOUS	QTY	BOTANICAL / COMMON NAME	CONT	SPD		REMARKS
	1	Caesalpinia pulcherrima / Red Bird Of Paradise	3 gal.			
	9	Lantana montevidensis 'Purple' / Trailing Lantana- Purple	3 gal			
SHRUBS / EVERGREEN	QTY	BOTANICAL / COMMON NAME	CONT	SPD		REMARKS
	2	Callistemon citrinus / Lemon Bottlebrush	5 gal			
	4	Rosmarinus officinalis / Rosemary	5 gal.			
MISCELLANEOUS MATERIALS	QTY	BOTANICAL / COMMON NAME	CONT			
	44 sf	DECOMPOSED GRANITE	TON			

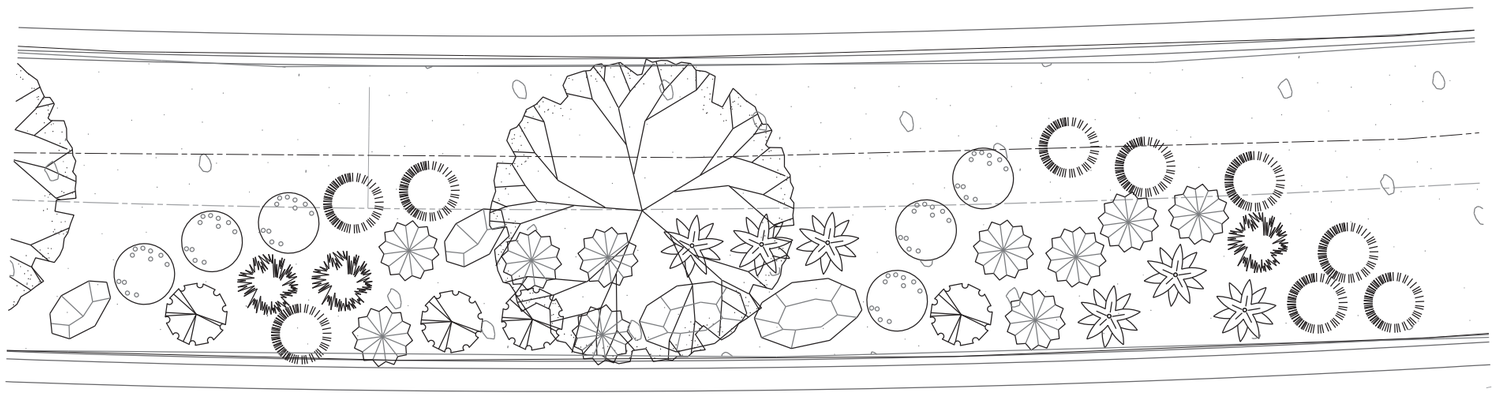

3 ENHANCED LANDSCAPE AREA "C"
SCALE = NTS

PLANT SCHEDULE PLANT AREA C						
ORNAMENTAL GRASSES	QTY	BOTANICAL / COMMON NAME	CONT	SPD		REMARKS
	9	Muhlenbergia capillaris 'Gulf Coast' / Gulf Coast Pink Muhly Grass	3 GAL.	2'-3' Spd		
	6	Muhlenbergia lindheimeri 'Big' / Big Lindheimer's Muhly	5 gal	3' - 4' Spd.		
SHRUBS / DECIDUOUS	QTY	BOTANICAL / COMMON NAME	CONT	SPD		REMARKS
	3	Caesalpinia pulcherrima / Red Bird Of Paradise	3 gal.			
	6	Lantana montevidensis 'Purple' / Trailing Lantana- Purple	3 gal			
SHRUBS / EVERGREEN	QTY	BOTANICAL / COMMON NAME	CONT	SPD		REMARKS
	4	Callistemon citrinus / Lemon Bottlebrush	5 gal			
	10	Rosmarinus officinalis / Rosemary	5 gal.			
MISCELLANEOUS MATERIALS	QTY	BOTANICAL / COMMON NAME	CONT			
	76 sf	DECOMPOSED GRANITE	TON			

WYOMING SPRINGS
SEGMENT 1
ROUND ROCK, TX

ROUND ROCK
TEXAS

halff
13620 BRANTWICK DRIVE
BLDG C, STE 200
AUSTIN, TX 78729
(512) 777-4800
TBPELS FIRM #312

Revision No.	Date	Description

REGISTERED LANDSCAPE ARCHITECT
TOBIN L. FOX
2680
STATE OF TEXAS
04/05/2023

100% SUBMITTAL

Project No.:	36179
Issued:	4/7/2023
Drawn By:	WC
Checked By:	TF
Scale:	1"=40'

Sheet Title
ENLARGED LANDSCAPE AREAS

474
Sheet Number

LANDSCAPE NOTES:

1. LANDSCAPE CONTRACTOR SHALL COORDINATE INSTALLATION OF ALL LANDSCAPE MATERIAL WITH RELATED IRRIGATION, SITE WORK, AND FINAL GRADING.

2. BY BIDDING, THE CONTRACTOR ACKNOWLEDGES THAT HE/SHE HAS SATISFIED HIMSELF/HERSELF AS TO THE NATURE AND LOCATION OF THE WORK AND TO THE QUALITY OF SURFACE AND SUBSURFACE MATERIALS OR OBSTACLES INSOFAR AS THE DATA IS REASONABLY ASCERTAINABLE FROM INSPECTION OF THE SITE. ANY FAILURE BY THE CONTRACTOR TO ACQUAINT HIMSELF/HERSELF WITH THE AVAILABLE INFORMATION WILL NOT RELIEVE HIM/HER FROM RESPONSIBILITY FOR ESTIMATING PROPERLY THE DIFFICULTY OR COST OF SUCCESSFULLY PERFORMING THE WORK AS DESCRIBED.

3. THE LANDSCAPE CONTRACTOR SHALL IDENTIFY AND REVIEW ALL UNDERGROUND UTILITY LOCATIONS PRIOR TO COMMENCING WORK AND SHALL EXERCISE EXTREME CAUTION WHEN WORKING CLOSE TO UTILITIES, AND SHALL NOTIFY THE OWNER OF APPARENT CONFLICTS WITH CONSTRUCTION AND UTILITIES SO THAT ADJUSTMENTS CAN BE PLANNED PRIOR TO INSTALLATION. CONTRACTOR MUST PROTECT ALL EXISTING LANDSCAPING AND HARDSCAPE ADJACENT TO PROPOSED LANDSCAPING IN THIS CONTRACT. LANDSCAPE CONTRACTOR SHALL NOTIFY THE OWNER OF ANY DAMAGE AND SHALL REPLACE DAMAGED PLANT MATERIAL WITH PLANTS OF EQUAL SIZE AND QUALITY AND SHALL REPAIR ANY DAMAGE TO SIDEWALKS OR ADJACENT STRUCTURES.

4. IRRIGATION: ALL TREES AND PLANTING BEDS SHALL BE IRRIGATED WITH AN UNDERGROUND AUTOMATIC IRRIGATION SYSTEM. IRRIGATION CONTRACTOR SHALL BE A STATE OF TEXAS LICENSED IRRIGATOR AND IS TO FOLLOW ALL TCEQ CODES AND REGULATIONS. CONTRACTOR IS RESPONSIBLE FOR PROVIDING AS-BUILT DRAWINGS AND SPECIFICATIONS FOR IRRIGATION SYSTEM INCLUDING PIPE SIZES AND LOCATIONS. REF. IRRIGATION NOTES AND DETAILS.

   ALL TREES SHALL HAVE TWO (2) BUBBLERS PER TREE.

5. LANDSCAPE CONTRACTOR TO BE FAMILIAR WITH THE CITY OF ROUND ROCK TREE ORDINANCE AND LANDSCAPE ORDINANCE SPECIFICATIONS IN REGARDS TO PLANTING AND INSTALLATION OF LANDSCAPE SUPPLIES AND MATERIALS.

6. LAYOUT, GRADING, AND TOPSOIL: LANDSCAPE CONTRACTOR SHALL BE RESPONSIBLE FOR ACCURATELY LAYING OUT THE PLANT BEDS AND LAWN AREAS BY SCALING THE DRAWINGS.

   LANDSCAPE CONTRACTOR SHALL BE RESPONSIBLE FOR CLEANUP AND FINAL GRADING OF THE SODDED AREAS. REVIEW WITH OWNER THE EXTENT OF CLEANUP AND GRADING OF AREA PRIOR TO COMMENCING WORK. SOD AREAS SHALL BE RAKED SMOOTH, REMOVING AND DISPOSING OF STONES OVER 1" DIAMETER AND FINE GRADED TO FEATHER INTO NATURAL GRADE. ALL AREAS SHALL BE FINE GRADED TO ACHIEVE POSITIVE DRAINAGE WITHOUT PUDDLES OR STANDING WATER.

   PLANT MATERIAL AND LAYOUT MUSH BE APPROVED BY THE LANDSCAPE ARCHITECT PRIOR TO INSTALLATION.

   LANDSCAPE CONTRACTOR SHALL EXCAVATE FULLY PREPARED PLANT BEDS AS REQUIRED TO ACCOMMODATE A FULL 6" OF PREPARED SOIL AND 3" ORGANIC MULCH LAYER. CLEAN, NATIVE TOPSOIL. STONES LARGER THAN 1" DIAMETER SHALL BE REMOVED AND DISPOSED OF OFF SITE. FOLLOWING EXCAVATION, PLACE PREPARED SOIL IN THESE PLANT BEDS. PREPARED SOIL SHALL CONSIST OF 2 PARTS IMPORTED "CHOCOLATE" LOAM SOIL AND 1 PART ORGANIC COMPOST SOIL CONDITIONER, THOROUGHLY BLENDED TOGETHER. THIS MIX SHALL ALSO BE USED TO BACKFILL PLANTING PITS OF ALL PIT-PLANTED SHRUBS AND GROUNDCOVERS.

7. PLANTS: ALL PLANTS SHALL BE NURSERY GROWN, GRADE 1 PLANTS MEETING AMERICAN ASSOCIATION OF NURSERYMEN STANDARDS, TYPICAL IN SHAPE AND SIZE FOR SPECIES. PLANTS SHALL NOT BE ROOT-BOUND NOR LOOSE IN THEIR CONTAINERS. HANDLE ALL PLANTS WITH CARE IN TRANSPORTING, PLANTING AND MAINTENANCE UNTIL INSPECTION AND FINAL ACCEPTANCE. PLANTING PITS FOR 1 AND 5 GALLONS SHRUBS SHALL BE AT LEAST 8" LARGER IN DIAMETER THAN THE CONTAINER SIZE. LARGER CONTAINER SIZES AND B&B PLANTS SHALL BE PLANTED IN PITS AT LEAST 18" LARGER IN DIAMETER THAN THE BALL SIZE. PLANTS SHALL BE INSTALLED TO PRESENT THEIR BEST SIDE FACING THE VIEWER. USE TOTAL QUANTITIES OF PLANTS INDICATED; ADJUST SPACING AS NEEDED TO EVENLY FILL BEDS. OWNER'S REPRESENTATIVE SHALL HAVE FINAL APPROVAL OF PLANT MATERIAL LAYOUT.

   SUBSTITUTIONS OF PLANT SPECIES, SIZES, OR OTHER SPECIFIED MATERIALS WILL NOT BE ALLOWED WITHOUT PRIOR APPROVAL BY THE LANDSCAPE ARCHITECT.

   UNLESS SPECIFICALLY NOTED, INSTALL ALL MASSED PLANTING UTILIZING TRIANGULAR SPACING.

   ALL TREES SHALL BE CONTAINER OR BOX GROWN. NO B&B TREES WILL BE ACCEPTED WITHOUT PRIOR APPROVAL FROM THE LANDSCAPE ARCHITECT AND/OR THE CITY FORESTER.

8. ALL IDENTIFICATION TAGS PROVIDED BY GROWERS AND PLACED ON TREES AND SHRUBS ARE TO REMAIN ON THE PLANTS THROUGH THE PUNCH-LIST INSPECTION. TAGS ARE TO BE REMOVED PRIOR TO FINAL ACCEPTANCE, OR UPON REQUEST OF THE PROJECT LANDSCAPE ARCHITECT.

9. LIVING EARTH TECHNOLOGIES MIX IS TO BE USED FOR PLANTING BACKFILL MIXTURES FOR NEW BEDS.

10. BERMUDA GRASS HYDROMULCH: LIMITS OF BERMUDA GRASS HYDROMULCH SHOWN ON DRAWINGS ARE SCHEMATIC AND NOT TO BE CONSTRUED TO BE PRECISE. BERMUDA HYDROMULCH WILL BE APPLIED TO ALL GROUND SURFACES NOT OTHERWISE PLANTED AS INDICATED ON THE LANDSCAPE PLAN BETWEEN BUILDINGS AND PERIMETER CURB LINE.

    ALL OTHER AREAS DISTURBED BY EARTHWORK OPERATIONS, UTILITIES AND OTHER CONSTRUCTION ACTIVITIES NOT INDICATED ON THE LANDSCAPE PLAN SHALL BE HYDROMULCHED AND IRRIGATED. RESTORATION SHALL BE ACCEPTABLE WHEN THE GRASS HAS GROWN AT LEAST 1-1/2" HIGH WITH 95% COVERAGE, PROVIDED NO BARE SPOTS LARGER THAN 16 SQUARE FEET EXIST.

11. MULCH: FOLLOWING PLANTING, MULCH "FULLY-PREPARED" BEDS AND MULCHED AREAS WITH 3" LAYER OF SHREDDED HARDWOOD MULCH AND FILL BASINS OF PIT-PLANTED SHRUBS WITH MULCH.

12. MAINTENANCE & WARRANTY: REGULAR MAINTENANCE IS REQUIRED OF ALL LANDSCAPE AREAS AND PLANT MATERIALS IN A VIGOROUS AND HEALTHY CONDITION, FREE FROM DISEASES, PEST WEEDS, LITTER AND CONSTRUCTION DEBRIS. THIS MAINTENANCE SHALL INCLUDE WEEDING, WATERING, FERTILIZATION, PRUNING, MOWING, EDGING, MULCHING OR OTHER NEEDED MAINTENANCE, IN ACCORDANCE WITH GENERALLY ACCEPTED HORTICULTURAL PRACTICES UNTIL THE PROJECT HAS BEEN ACCEPTED BY THE PROJECT LANDSCAPE ARCHITECT.

    PROVIDE A ONE-YEAR REPLACEMENT WARRANTY FOR ALL PLANT MATERIALS. WARRANTY SHALL COVER PLANTS WHICH HAVE DIED OR PARTIALLY DIED (THEREBY RUINING THEIR NATURAL SHAPE), BUT SHALL NOT INCLUDE DAMAGE BY VANDALISM, BROWSING, HAIL, ABNORMAL FREEZES, DROUGHT OR NEGLIGENCE BY THE OWNER. THE WARRANTY IS INTENDED TO COVER CONTRACTOR NEGLIGENCE, INFESTATIONS, DISEASE AND DAMAGE OR SHOCK TO PLANTS. PLANTS REPLACED UNDER WARRANTY WILL BE WARRANTED FOR ONE YEAR FOLLOWING REPLACEMENT.

13. PROVIDE AND MAINTAIN A 3 FOOT CLEAR AREA AROUND ALL FIRE HYDRANTS.

14. ALL STEEL EDGING WITHIN PARKING OR LANDSCAPE ISLANDS MUST BE 4 FEET MINIMUM FROM ALL TREE TRUNKS.

GENERAL PLANTING REQUIREMENTS (Sec. 8-10(e))

1. THE PLANTING SPECIFICATIONS AND STANDARDS INCLUDED IN THE TREE TECHNICAL MANUAL ARE APPLICABLE UNLESS OTHERWISE STATED HEREIN.

2. ALL TREES SHALL BE PLANTED IN A PERVIOUS AREA NO LESS THAN FOUR (4) FEET WIDE IN ANY DIRECTION MEASURED FROM THE CENTER OF THE TREE, UNLESS OTHERWISE STATED HEREIN. SAID PERVIOUS AREA SHALL BE COVERED WITH MULCH TO A MINIMUM AVERAGE THICKNESS OF THREE (3) INCHES, EXCEPT FOR THE AREA WITHIN A SIX (6) INCH RADIUS OF THE TREE TRUNK WHICH SHALL HAVE NO MULCH OR OTHER MATERIAL ABOVE THE ROOT BALL IN ORDER TO PREVENT OR REDUCE THE POSSIBILITY OF BARK ROT.

3. NO MORE THAN 50 PERCENT OF THE REQUIRED TREES AND SHRUBS SHALL BE OF THE SAME SPECIES WITHOUT THE APPROVAL OF THE ZONING ADMINISTRATOR. SUCH APPROVAL MAY ONLY BE GRANTED IN ORDER TO ACHIEVE A SPECIFIC DESIGN INTENT OF THE LANDSCAPE ARCHITECT.

4. IMPROVED SOILS CONTAINING A MINIMUM 20% ORGANIC CONTENT SHALL BE PROVIDED IN ALL REQUIRED LANDSCAPE AREAS IN ACCORDANCE WITH THE FOLLOWING:

   4.1. TURF AREAS TO A MINIMUM DEPTH OF FOUR (4) INCHES;
   4.2. PLANTING BEDS TO A MINIMUM DEPTH OF EIGHT (8) INCHES; AND
   4.3. TREE PLANTING PITS SHALL BE 50% EXCAVATED SOIL AND 50% PREPARED SOIL.

5. ALL LANDSCAPING SHALL BE SEPARATED FROM VEHICULAR USE AREAS BY SOME FORM OF BARRIER SUCH AS RAISED CONCRETE CURBING, BOLLARDS, CURB STOPS, OR OTHER SUITABLE PERMANENT ALTERNATIVE.

6. ALL LANDSCAPE BEDS SHALL BE SEPARATED FROM SOD AREAS BY SOME FORM OF BARRIER SUCH AS STEEL EDGING, MASONRY MATERIALS, OR ANOTHEREQUIVALENT DURABLE MATERIAL AS APPROVED BY THE ZONING ADMINISTRATOR. NO PLASTIC MATERIALS SHALL BE ALLOWED, PROVIDED HOWEVER, THE BARRIERS MAY BE DESIGNED IN SUCH A WAY TO CAPTURE, FILTER, REUSE OR INFILTRATE RAINWATER WITH THE PURPOSE OF PROTECTING AND CONSERVING WATER RESOURCES.

7. LANDSCAPING SHALL NOT OBSTRUCT THE VIEW BETWEEN ACCESS DRIVES AND PARKING AISLES.

8. NOTHING SHALL BE ERECTED, PLACED, ALLOWED TO GROW, OR PLANTED SO THAT IT IMPEDES VISION BETWEEN THE HEIGHT OF THREE (3) FEET AND 10 FEET ABOVE THE CURB WITHIN A SIGHT VISIBILITY TRIANGLE, AS DEFINED IN SEC. 1-50.

9. NO ARTIFICIAL PLANT MATERIAL MAY BE USED IN ANY FORM TO SATISFY THE REQUIREMENTS OF THIS SECTION.

10. BERMS SHALL NOT ENCROACH UPON THE CRITICAL ROOT ZONES OF EXISTING TREES, AS REGULATED BY CHAPTER 8, ARTICLE III, TREE PROTECTION AND PRESERVATION.

11. WHEREVER SOD OR TURF GRASS IS USED, SUCH GRASS SHALL BE OF A DROUGHT-TOLERANT SPECIES.

12. ANY LANDSCAPING PLACED IN UTILITY EASEMENTS SHALL NOT BE COUNTED TOWARDS THE MINIMUM LANDSCAPING REQUIREMENTS.

13. NOTWITHSTANDING THE REQUIREMENTS OF THE TREE TECHNICAL MANUAL, THE ZONING ADMINISTRATOR MAY ALLOW LARGE TREES TO BE PLACED CLOSER TO A BUILDING IN ORDER TO ACHIEVE AN URBAN STREETSCAPE.

14. AT THE TIME OF PLANTING, ALL TREES SHALL HAVE THE FOLLOWING CALIPER MEASUREMENTS:

   14.1. LARGE TREES: THREE (3) INCHES;
   14.2. MEDIUM TREES: TWO (2) INCHES;
   14.3. SMALL/ORNAMENTAL TREES: ONE (1) INCH.

15. ALL TREES PLANTED TO MEET THE LANDSCAPING STANDARDS HEREIN SHALL BE PROTECTED TREES REGARDLESS OF SIZE.

TREES / DECIDUOUS	QTY	BOTANICAL / COMMON NAME	CONT	CAL	HT	SPD		REMARKS
	22	Quercus polymorpha 'Monterey' / Monterey Oak	100 gal min.	4" cal. min.	14` - 18` ht. min.			with 6' height low branch clearance.
	30	Quercus virginiana / Southern Live Oak	100 gal min.	4" cal. min.	14` - 18` ht. min.			with 6' height low branch clearance.
TREES / FLOWERING	QTY	BOTANICAL / COMMON NAME	CONT	CAL	HT	SPD		REMARKS
	17	Ilex decidua / Possumhaw	45 gal. min.	1.5" cal. min.	5` - 6` ht. min			
	28	Lagerstroemia Indica 'Red' / Red Crape Myrtle	45 gal. min.	1.5" cal. min.	5` - 6` ht. min			
	16	Sophora secundiflora / Texas Mountain Laurel	45 gal. min.	1.5" cal. min.	5` - 6` ht. min			
ORNAMENTAL GRASSES	QTY	BOTANICAL / COMMON NAME	CONT	___	HT	SPD	SPACING	REMARKS
	84	Miscanthus sinensis 'Gracillimus' / Eulalia Grass	3 gal.			36" o.c.	48" o.c.	
	54	Muhlenbergia capillaris 'Gulf Coast' / Gulf Coast Pink Muhly Grass	3 GAL.			2`-3` Spd	48" o.c.	
	12	Muhlenbergia lindheimeri 'Big' / Big Lindheimer's Muhly	3 gal.			3` - 4` Spd.	48" o.c.	
SHRUBS / DECIDUOUS	QTY	BOTANICAL / COMMON NAME	CONT	___	HT	SPD	SPACING	REMARKS
	12	Caesalpinia pulcherrima / Red Bird Of Paradise	3 gal.				48" o.c.	
	96	Lantana montevidensis 'Purple' / Trailing Lantana- Purple	3 gal				48" o.c.	
SHRUBS / EVERGREEN	QTY	BOTANICAL / COMMON NAME	CONT	___	HT	SPD	SPACING	REMARKS
	35	Callistemon citrinus / Lemon Bottlebrush	3 gal.				48" o.c.	
	104	Rosmarinus officinalis / Rosemary	3 gal.				48" o.c.	
GROUND COVERS	QTY	BOTANICAL / COMMON NAME	CONT	SIZE				
	663 sf	Melampodium leucanthum / Blackfoot Daisy	1 gal					spacing
HYDROMULCH	QTY	BOTANICAL / COMMON NAME	CONT	SIZE				
	102,589 sf	Cynodon dactylon / Common Bermuda Grass	Hydromulch					
MISCELLANEOUS MATERIALS	QTY	BOTANICAL / COMMON NAME	CONT	SIZE				
	341 lf	-- -- -- / 8" LIMESTONE EDGING	Lf.	8" wide				
ROCK	QTY	BOTANICAL / COMMON NAME	CONT	SIZE				
	400 cy	- - - / DECOMPOSED GRANITE	cu. yd.					

BOULDER SCHEDULE

BOULDERS	QTY	COMMON NAME	QTY.	REMARKS
	32	SMALL BOULDERS	3,2 tons total	REFER TO LANDSCAPE DETAIL 8/467
	24	MEDIUM BOULDERS	12 tons total	REFER TO LANDSCAPE DETAIL 8/467

WYOMING SPRINGS
SEGMENT 1
ROUND ROCK, TX

ROUND ROCK TEXAS

halff
13620 Briarwick Drive
Suite 100
Austin, Texas 78729-1102
TEL (512) 777-4600
FAX (512) 252-8141

Revision No.	Date	Description
.	.	.
.	.	.
.	.	.
.	.	.
.	.	.
.	.	.
.	.	.
.	.	.

REGISTERED LANDSCAPE ARCHITECT
TOBIN L. FOX
STATE OF TEXAS

04/05/2023

100% SUBMITTAL

Project No.:	36179
Issued:	2023/04/05
Drawn By:	WC
Checked By:	TF
Scale:	-

Sheet Title

LANDSCAPE NOTES AND SCHEDULES

475

Sheet Number

EARTHWORKS
SOFFITS
SPECIALTIES
SPECIALTIES
DOOR/FRAMES
SPECIALTIES
SIGNAGE
SIGNAGE
SIGNAGE

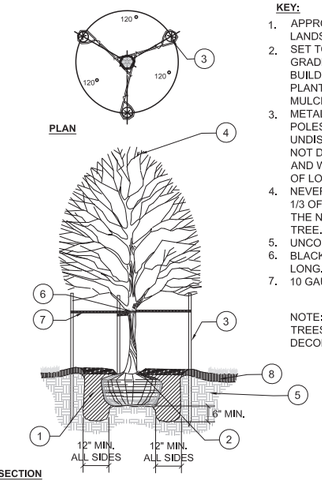

KEY:

1. APPROVED PLANTING MIX BY LANDSCAPE ARCHITECT.
2. SET TOP OF ROOT BALL AT FINISH GRADE. BUILD 3" HT. SAUCER AROUND PLANTING PIT WITH TOPSOIL. MULCH - 3" MIN. DEPTH.
3. METAL 8' "T" POSTS, INSTALL POLES MIN. 1'-0" INTO UNDISTURBED SUBGRADE, DO NOT DISTURB ROOTBALL. HOSE AND WIRE AT LOWEST CROTCH OF LOWEST BRANCH.
4. NEVER CUT LEADER, TRIM UP TO 1/3 OF BRANCHES, RETAINING THE NATURAL SHAPE OF THE TREE.
5. UNCOMPACTED NATIVE SOIL.
6. BLACK RUBBER HOSE, MIN. 1'-0" LONG.
7. 10 GAUGE GALV. WIRE

NOTE: REPLACE MULCH WHEN TREES ARE LOCATED IN DECOMPOSED GRANITE.

1 TREE PLANTING

SCALE: NONE

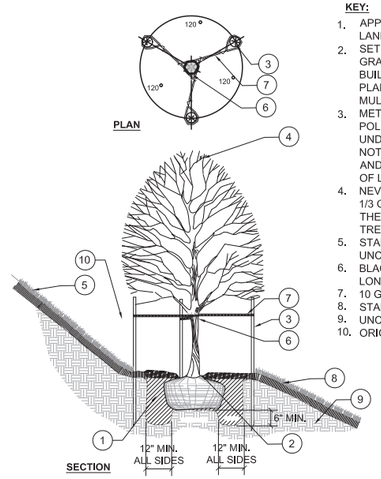

KEY:

1. APPROVED PLANTING MIX BY LANDSCAPE ARCHITECT.
2. SET TOP OF ROOT BALL AT FINISH GRADE. BUILD 3" HT. SAUCER AROUND PLANTING PIT WITH TOPSOIL. MULCH - 3" MIN. DEPTH.
3. METAL 8' "T" POSTS, INSTALL POLES MIN. 1'-0" INTO UNDISTURBED SUBGRADE, DO NOT DISTURB ROOTBALL. HOSE AND WIRE AT LOWEST CROTCH OF LOWEST BRANCH.
4. NEVER CUT LEADER, TRIM UP TO 1/3 OF BRANCHES, RETAINING THE NATURAL SHAPE OF THE TREE.
5. STABILIZE SLOPES WITH SOD. UNCOMPACTED NATIVE SOIL.
6. BLACK RUBBER HOSE, MIN. 1'-0" LONG.
7. 10 GAUGE GALV. WIRE
8. STABILIZED SLOPES WITH SOD.
9. UNCOMPACTED NATIVE SOIL
10. ORIGINAL SLOPE

2 TREE PLANTING ON SLOPE

3/4" = 1'-0"

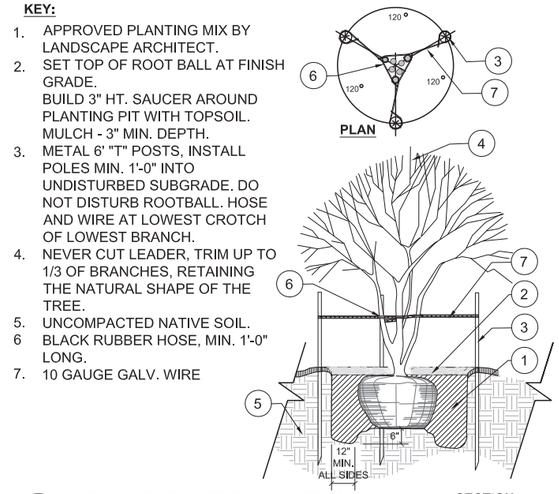

KEY:

1. APPROVED PLANTING MIX BY LANDSCAPE ARCHITECT.
2. SET TOP OF ROOT BALL AT FINISH GRADE. BUILD 3" HT. SAUCER AROUND PLANTING PIT WITH TOPSOIL. MULCH - 3" MIN. DEPTH.
3. METAL 6' "T" POSTS, INSTALL POLES MIN. 1'-0" INTO UNDISTURBED SUBGRADE. DO NOT DISTURB ROOTBALL. HOSE AND WIRE AT LOWEST CROTCH OF LOWEST BRANCH.
4. NEVER CUT LEADER, TRIM UP TO 1/3 OF BRANCHES, RETAINING THE NATURAL SHAPE OF THE TREE.
5. UNCOMPACTED NATIVE SOIL.
6 BLACK RUBBER HOSE, MIN. 1'-0" LONG.
7. 10 GAUGE GALV. WIRE

3 ORNAMENTAL TREE PLANTING

SCALE: NONE

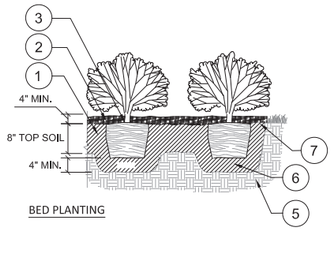

KEY:

1. APPROVED PLANTING MIX BY LANDSCAPE ARCHITECT: WATER AND TAMP TO REMOVE AIR POCKETS 6" MIN. ALL SIDES.
2. DECOMPOSED GRANITE 4" MIN. DEPTH.
3. SHRUB ROOTBALL CROWN TO BE FLUSH WITH FINISH GRADE.
4. FINISH GRADE WITH TOPSOIL
5. NATIVE SUBGRADE.
6. PREVENT SETTLING OF SHRUB BY COMPACTING SOIL MIX BELOW BALL.
7. WEED FABRIC BELOW DECOMPOSED GRANITE

4 SHRUB & GROUNDCOVER PLANTING

3/4" = 1'-0"

KEY:

1. SHRUB OR GROUNDCOVER

5 SHRUB OR GROUNDCOVER TRIANGULAR SPACING

1 1/2" = 1'-0"

KEY:

1. EXISTING VEGETATION, PROVIDE ISA LEVEL 2 PRUNING ALONG BOTH SIDES OF PATHWAY.
2. RESEED DISTURBED AREA WITH NATIVE GRASSES / WILDFLOWERS. REF.
3. PLANTING PLAN. SINGLE RUN OF DRIP TUBING ALONG BOTH SIDES OF WALKWAY IN DISTURBED AREA, REF. IRRIGATION PLANS.

6 PRUNING DETAIL

SCALE: NONE

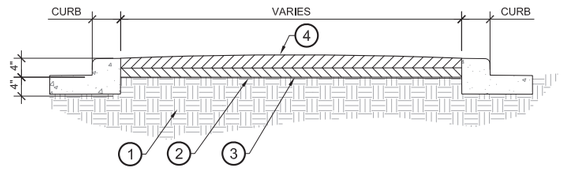

KEY:

1. COMPACTED SUBGRADE TO 95% MAX DENSITY
2. WEED FABRIC
3. DECOMPOSED GRANITE, 5" WET, ROLL AND COMPACT TO 3". INSTALLED 2 LIFTS
4. HIGH POINT / CROWN @ CENTERLINE

7 DECOMPOSED GRANITE DETAIL

3/4" = 1'-0"

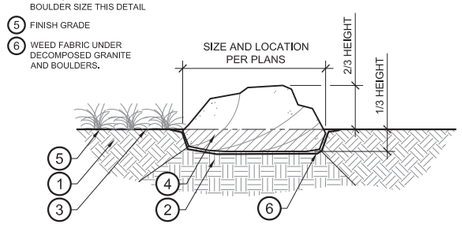

KEY:

1. UNDISTURBED SOIL
2. COMPACTED SUBGRADE TO 95% MAX DENSITY
3. ADJACENT LANDSCAPE BED, REFER TO LANDSCAPE SHEETS
4. MEDIUM WEATHERED LIMESTONE BOULDER SET INTO COMPACTED SUBGRADE. BOTTOM 1/3 OF BOULDER TO BE BURIED. SEE SITE PLAN SHEETS FOR LOCATIONS. SEE BOULDER SIZE THIS DETAIL
5. FINISH GRADE
6. WEED FABRIC UNDER DECOMPOSED GRANITE AND BOULDERS.

NOTE:

1. LANDSCAPE ARCHITECT TO SELECT AND APPROVE BOULDER SIZE, COLOR AND LOCATION PRIOR TO INSTALLATION.

BOULDER MINIMUM SIZES

SMALL BOULDER - MIN. SIZE: 24" X 12" X 12"
MEDIUM BOULDER - MIN. SIZE: 36" X 24" X 18"

8 DECORATIVE LANDSCAPE BOULDER

3/4" = 1'-0"

KEY:

1. UNDISTURBED SOIL
2. 12" WIDE X 2" DEEP SAND LEVELING BED
3. ADJACENT LANDSCAPE BED OR TURF, REFER TO LANDSCAPE SHEETS
4. LIMESTONE EDGE / MOW CURB, 8" x 8" X LENGTH VARIES, SET 2" ABOVE ADJACENT GRADE
5. FINISH GRADE
6. COMPACTED SUBGRADE

NOTE:

1. MORTAR JOINTS, APPROX. 1" WIDE, USE MORTAR TO SMOOTH EDGE OF MOW CURB. COLOR TO MATCH LIMESTONE.

9 LIMESTONE EDGE

3/4" = 1'-0"

WYOMING SPRINGS
SEGMENT 1
ROUND ROCK, TX

ROUND ROCK TEXAS

halff
13620 Briarwick Drive
Suite 100
Austin, Texas 78729-1102
TEL (512) 777-4600
FAX (512) 252-8141

Revision No.	Date	Description



04/05/2023

100% SUBMITTAL

Project No.:	36179
Issued:	2023/04/05
Drawn By:	WC
Checked By:	TF
Scale:	

Sheet Title

LANDSCAPE DETAILS SHEET 2 OF 2

476
Sheet Number

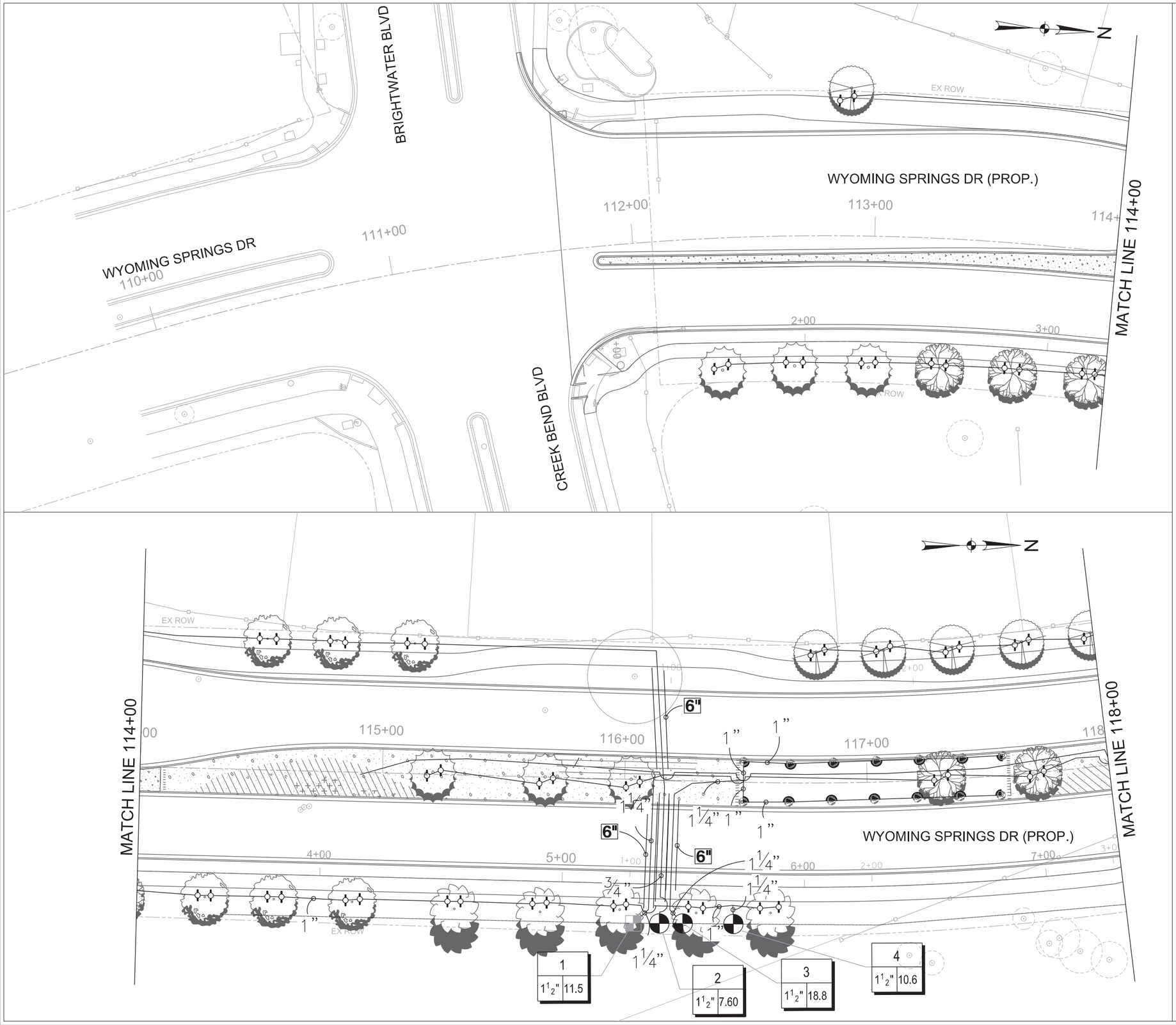

0 20 40 60 80

SCALE: 1"=40'

NOTES

1. REFER TO CIVIL DRAWINGS FOR PROPOSED / EXISTING HARDSCAPE CONDITIONS.
2. IRRIGATION PLAN IS DIAGRAMMATIC IN NATURE. CONTRACTOR SHALL BE RESPONSIBLE FOR ACCOMPLISHING FULL COVERAGE IN ALL AREAS WITH SPECIFIED EQUIPMENT. ANY DISCREPENCIES IN THE PLAN SHOULD BE BROUGHT TO THE LICENSED IRRIGATOR'S ATTENTION BEFORE BID.
3. ENHANCED IRRIGATION AREAS ARE ASSUMED TO CONTAIN ANY COMBINATION OF IRRIGATION STYLES,(DRIP, SRAY, ROTOR, BUBBLERS, ETC.).
4. PROPOSED TREES TO HAVE 2 BUBBLERS PER TREE, TYP.

Know what's **below.**
Call before you dig.

THE INFORMATION SHOWN ON THESE DRAWINGS INDICATING SIZE, TYPE AND LOCATION OF UNDERGROUND, SURFACE, AND AERIAL UTILITIES IS NOT GUARANTEED TO BE EXACT OR COMPLETE. THE CONTRACTOR SHALL CONTACT THE ROUND ROCK AREA "ONE CALL" SYSTEM AT 1-800-344-8377 (DIG TESS) 48 HOURS PRIOR TO BEGINNING ANY EXCAVATION FOR EXISTING UTILITY LOCATIONS. THE CONTRACTOR SHALL ALSO BE FULLY RESPONSIBLE FOR FIELD VERIFYING LOCATIONS AND ELEVATIONS OF ALL EXISTING UTILITIES AFFECTED BY CONSTRUCTION FOR THIS PROJECT IN ORDER TO AVOID DAMAGING THOSE UTILITIES, AND SHALL IMMEDIATELY ARRANGE FOR REPAIR AND RESTORATION OF CONTRACTOR-DAMAGED UTILITIES TO THE UTILITY COMPANY'S APPROVAL AT THE EXPENSE OF THE CONTRACTOR.

WYOMING SPRINGS
SEGEMENT 1
ROUND ROCK, TX

ROUND ROCK
TEXAS

halff
13620 BRANTWICK DR
BLDG C, STE 100
AUSTIN, TX 78729
(512) 777-4600
TBPELS FIRM #312

Revision No.	Date	Description

STATE OF TEXAS
TOBIN L. FOX
0014051
REGISTERED LANDSCAPE ARCHITECT
04/05/2023

100% SUBMITTAL

Project No.:	36179
Issued:	4/7/2023
Drawn By:	WC
Checked By:	TF
Scale:	1"=40'

Sheet Title

IRRIGATION PLAN
SHEET 1 OF 6

477

Sheet Number

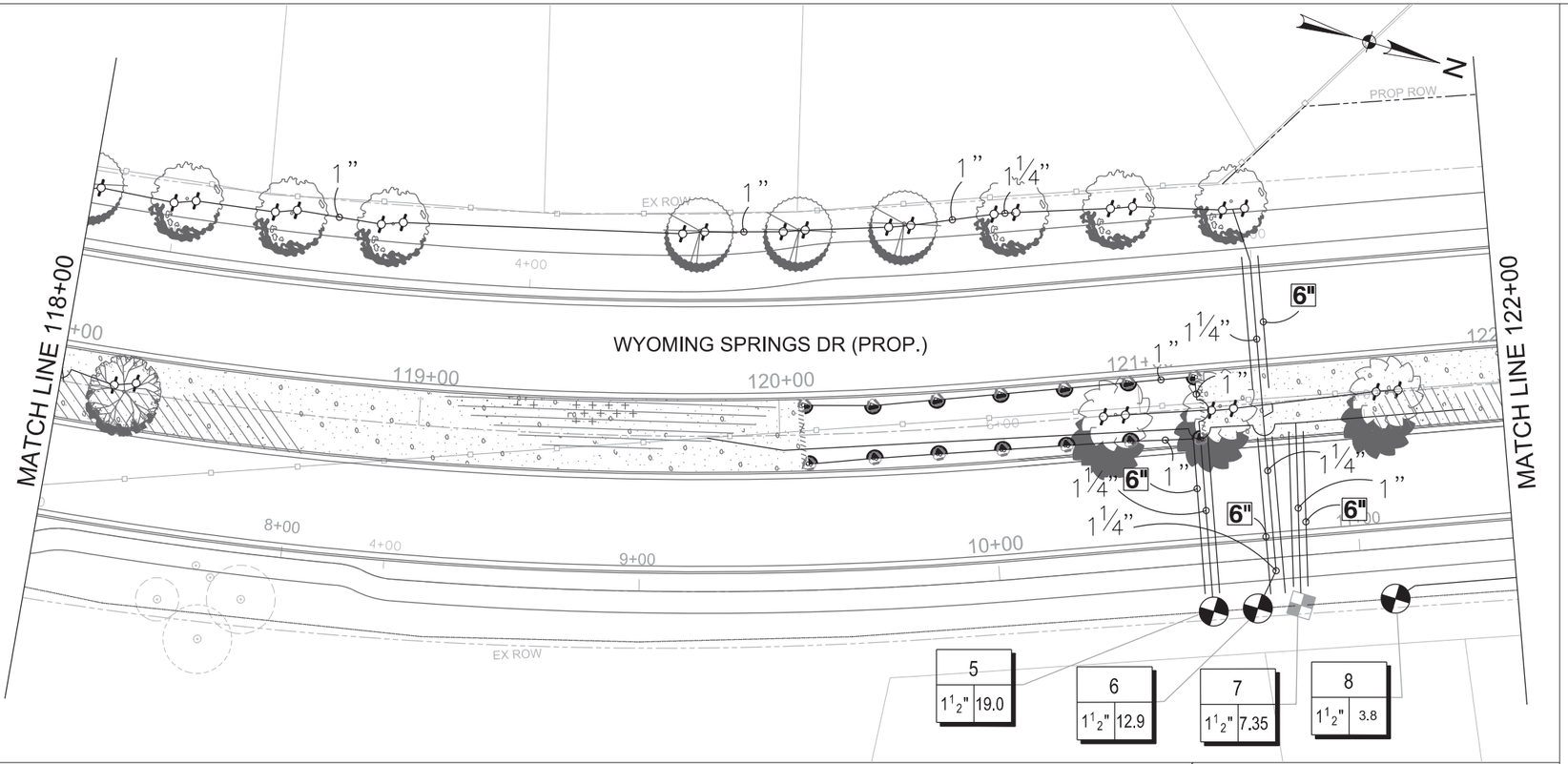

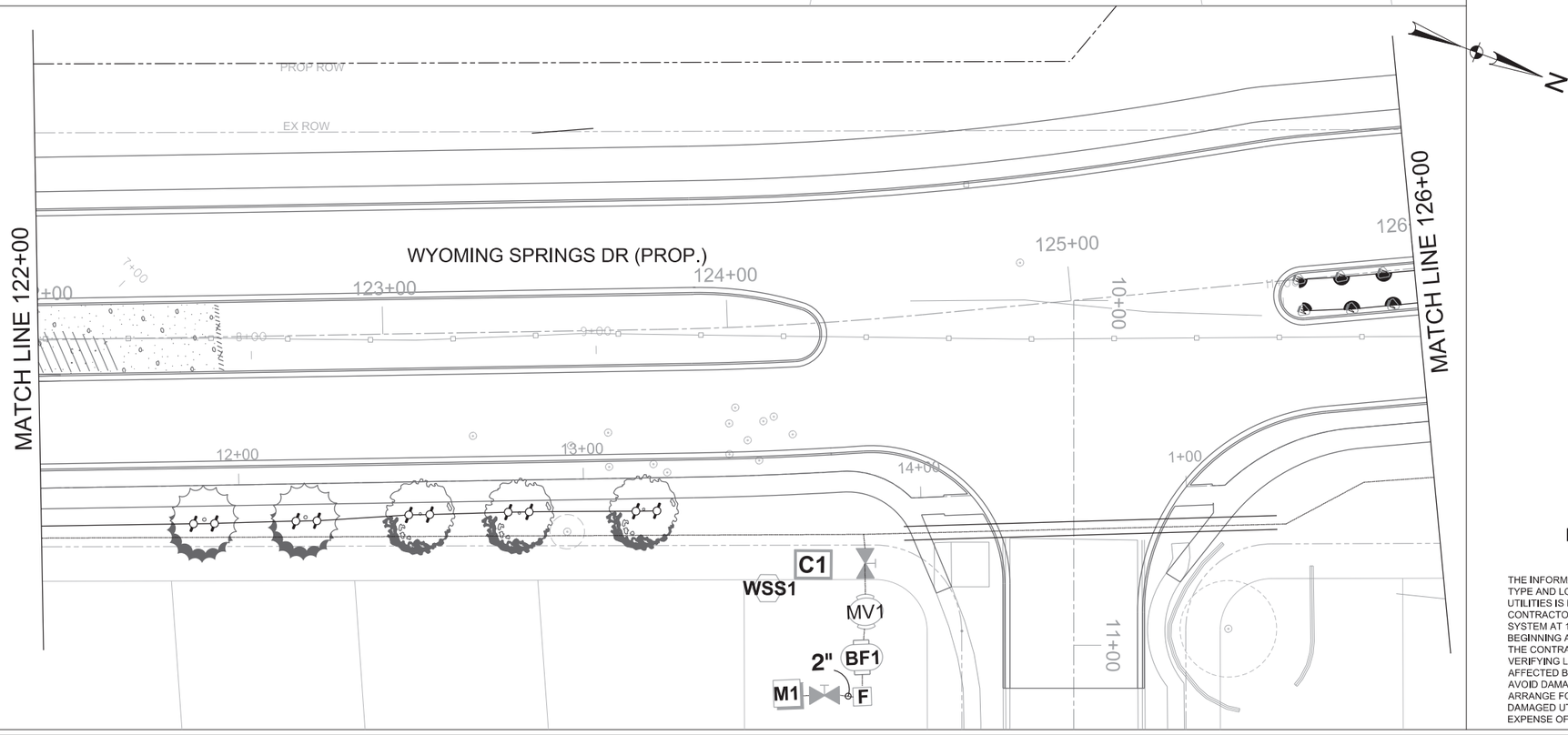

0 20 40 60 80

SCALE: 1"=40'

NOTES

1. REFER TO CIVIL DRAWINGS FOR PROPOSED / EXISTING HARDSCAPE CONDITIONS.
2. IRRIGATION PLAN IS DIAGRAMMATIC IN NATURE. CONTRACTOR SHALL BE RESPONSIBLE FOR ACCOMPLISHING FULL COVERAGE IN ALL AREAS WITH SPECIFIED EQUIPMENT. ANY DISCREPENCIES IN THE PLAN SHOULD BE BROUGHT TO THE LICENSED IRRIGATOR'S ATTENTION BEFORE BID.
3. ENHANCED IRRIGATION AREAS ARE ASSUMED TO CONTAIN ANY COMBINATION OF IRRIGATION STYLES,(DRIP, SRAY, ROTOR, BUBBLERS, ETC.).
4. PROPOSED TREES TO HAVE 2 BUBBLERS PER TREE, TYP.

WYOMING SPRINGS
SEGEMENT 1
ROUND ROCK, TX

ROUND ROCK
TEXAS

halff
13620 BRANTWICK DR
BLDG C, STE 100
AUSTIN, TX 78729
(512) 777-4600
TBPELS FIRM #312

Revision No.	Date	Description

STATE OF TEXAS
TOBIN L. FOX
0014051
LICENSED IRRIGATOR

04/05/2023

100% SUBMITTAL

811
Know what's **below.**
Call before you dig.

THE INFORMATION SHOWN ON THESE DRAWINGS INDICATING SIZE, TYPE AND LOCATION OF UNDERGROUND, SURFACE, AND AERIAL UTILITIES IS NOT GUARANTEED TO BE EXACT OR COMPLETE. THE CONTRACTOR SHALL CONTACT THE ROUND ROCK AREA "ONE CALL" SYSTEM AT 1-800-344-8377 (DIG TESS) 48 HOURS PRIOR TO BEGINNING ANY EXCAVATION FOR EXISTING UTILITY LOCATIONS. THE CONTRACTOR SHALL ALSO BE FULLY RESPONSIBLE FOR FIELD VERIFYING LOCATIONS AND ELEVATIONS OF ALL EXISTING UTILITIES AFFECTED BY CONSTRUCTION FOR THIS PROJECT IN ORDER TO AVOID DAMAGING THOSE UTILITIES, AND SHALL IMMEDIATELY ARRANGE FOR REPAIR AND RESTORATION OF CONTRACTOR-DAMAGED UTILITIES TO THE UTILITY COMPANY'S APPROVAL AT THE EXPENSE OF THE CONTRACTOR.

Project No.:	36179
Issued:	4/7/2023
Drawn By:	WC
Checked By:	TF
Scale:	1"=40'

Sheet Title

IRRIGATION PLAN
SHEET 2 OF 6

478

Sheet Number

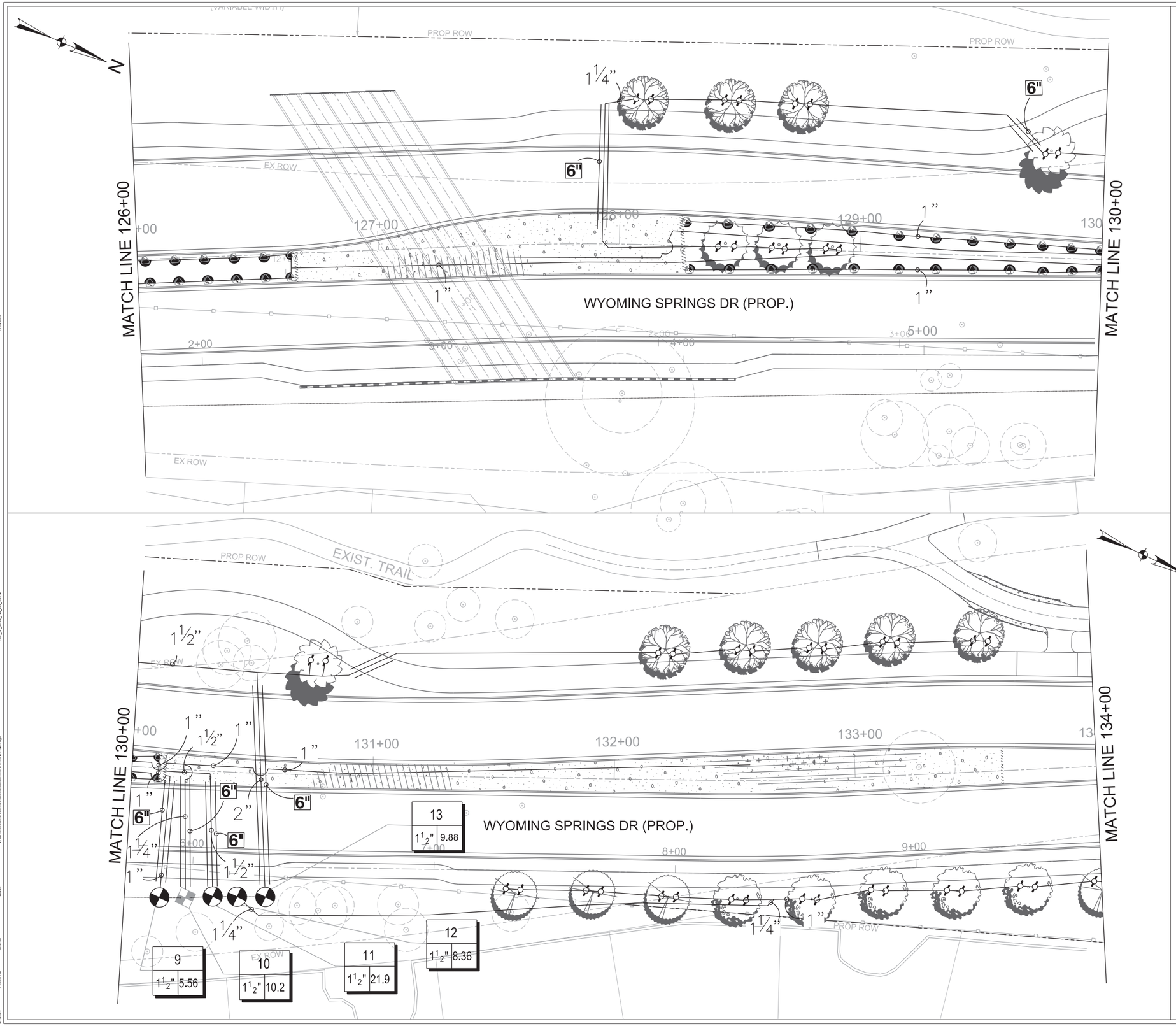

0 20 40 60 80

SCALE: 1"=40'

NOTES

1. REFER TO CIVIL DRAWINGS FOR PROPOSED / EXISTING HARDSCAPE CONDITIONS.
2. IRRIGATION PLAN IS DIAGRAMMATIC IN NATURE. CONTRACTOR SHALL BE RESPONSIBLE FOR ACCOMPLISHING FULL COVERAGE IN ALL AREAS WITH SPECIFIED EQUIPMENT. ANY DISCREPENCIES IN THE PLAN SHOULD BE BROUGHT TO THE LICENSED IRRIGATOR'S ATTENTION BEFORE BID.
3. ENHANCED IRRIGATION AREAS ARE ASSUMED TO CONTAIN ANY COMBINATION OF IRRIGATION STYLES,(DRIP, SRAY, ROTOR, BUBBLERS, ETC.).
4. PROPOSED TREES TO HAVE 2 BUBBLERS PER TREE, TYP.

Know what's **below.**
Call before you dig.

THE INFORMATION SHOWN ON THESE DRAWINGS INDICATING SIZE, TYPE AND LOCATION OF UNDERGROUND, SURFACE, AND AERIAL UTILITIES IS NOT GUARANTEED TO BE EXACT OR COMPLETE. THE CONTRACTOR SHALL CONTACT THE ROUND ROCK AREA "ONE CALL" SYSTEM AT 1-800-344-8377 (DIG TESS) 48 HOURS PRIOR TO BEGINNING ANY EXCAVATION FOR EXISTING UTILITY LOCATIONS. THE CONTRACTOR SHALL ALSO BE FULLY RESPONSIBLE FOR FIELD VERIFYING LOCATIONS AND ELEVATIONS OF ALL EXISTING UTILITIES AFFECTED BY CONSTRUCTION FOR THIS PROJECT IN ORDER TO AVOID DAMAGING THOSE UTILITIES, AND SHALL IMMEDIATELY ARRANGE FOR REPAIR AND RESTORATION OF CONTRACTOR-DAMAGED UTILITIES TO THE UTILITY COMPANY'S APPROVAL AT THE EXPENSE OF THE CONTRACTOR.

WYOMING SPRINGS
SEGEMENT 1
ROUND ROCK, TX

ROUND ROCK
TEXAS

halff
13620 BRANTWICK DR
BLDG C, STE 100
AUSTIN, TX 78729
(512) 777-4800
TBPELS FIRM #312

Revision No.	Date	Description

STATE OF TEXAS
TOBIN L. FOX
0014051
LICENSED IRRIGATOR

04/05/2023

100% SUBMITTAL

Project No.:	36179
Issued:	4/7/2023
Drawn By:	WC
Checked By:	TF
Scale:	1"=40'

Sheet Title

IRRIGATION PLAN
SHEET 3 OF 6

479

Sheet Number

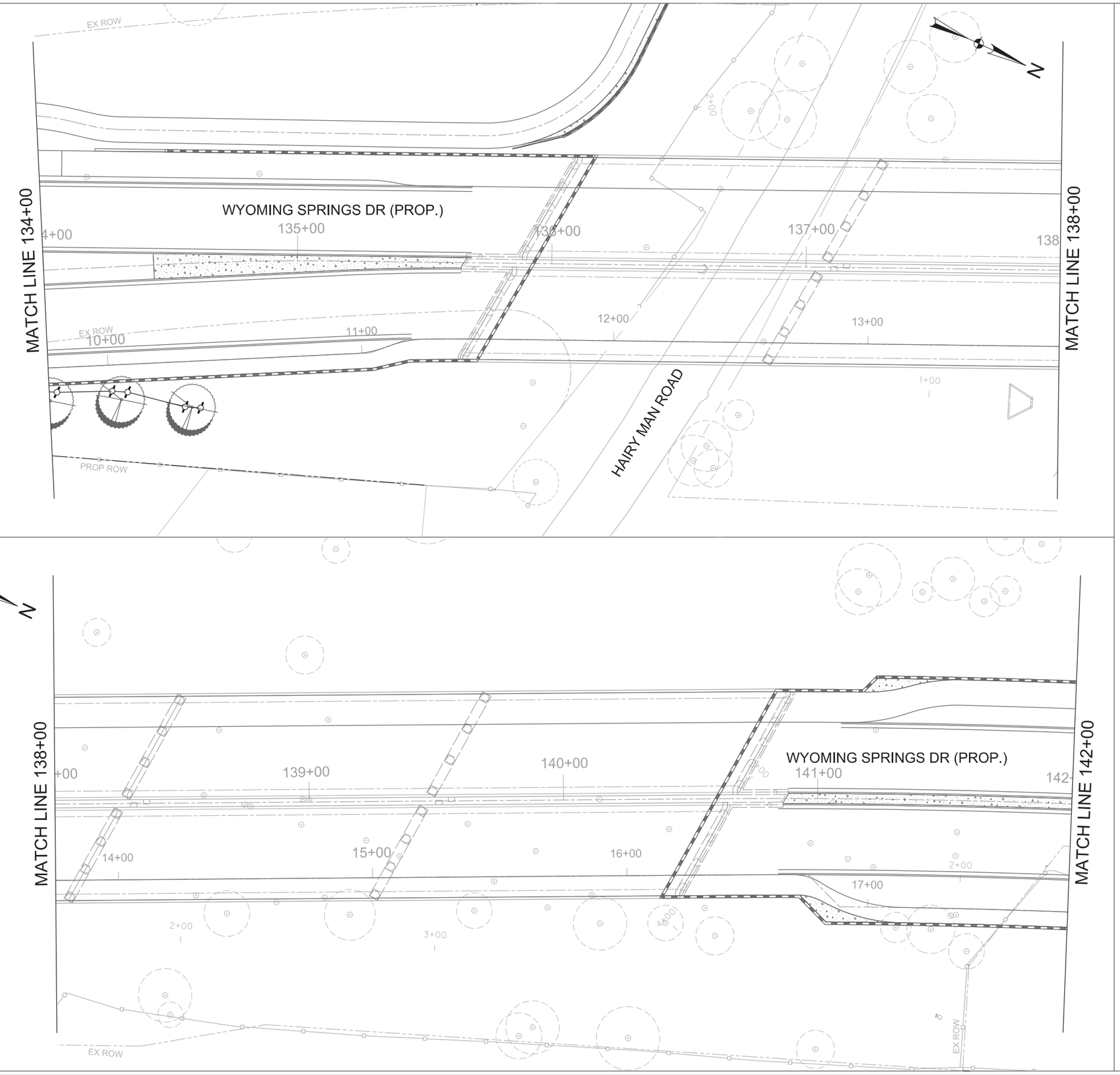

0 20 40 60 80

SCALE: 1"=40'

NOTES

1. REFER TO CIVIL DRAWINGS FOR PROPOSED / EXISTING HARDSCAPE CONDITIONS.
2. IRRIGATION PLAN IS DIAGRAMMATIC IN NATURE. CONTRACTOR SHALL BE RESPONSIBLE FOR ACCOMPLISHING FULL COVERAGE IN ALL AREAS WITH SPECIFIED EQUIPMENT. ANY DISCREPENCIES IN THE PLAN SHOULD BE BROUGHT TO THE LICENSED IRRIGATOR'S ATTENTION BEFORE BID.
3. ENHANCED IRRIGATION AREAS ARE ASSUMED TO CONTAIN ANY COMBINATION OF IRRIGATION STYLES,(DRIP, SRAY, ROTOR, BUBBLERS, ETC.).
4. PROPOSED TREES TO HAVE 2 BUBBLERS PER TREE, TYP.

Know what's **below.**
Call before you dig.

THE INFORMATION SHOWN ON THESE DRAWINGS INDICATING SIZE, TYPE AND LOCATION OF UNDERGROUND, SURFACE, AND AERIAL UTILITIES IS NOT GUARANTEED TO BE EXACT OR COMPLETE. THE CONTRACTOR SHALL CONTACT THE ROUND ROCK AREA "ONE CALL" SYSTEM AT 1-800-344-8377 (DIG TESS) 48 HOURS PRIOR TO BEGINNING ANY EXCAVATION FOR EXISTING UTILITY LOCATIONS. THE CONTRACTOR SHALL ALSO BE FULLY RESPONSIBLE FOR FIELD VERIFYING LOCATIONS AND ELEVATIONS OF ALL EXISTING UTILITIES AFFECTED BY CONSTRUCTION FOR THIS PROJECT IN ORDER TO AVOID DAMAGING THOSE UTILITIES, AND SHALL IMMEDIATELY ARRANGE FOR REPAIR AND RESTORATION OF CONTRACTOR-DAMAGED UTILITIES TO THE UTILITY COMPANY'S APPROVAL AT THE EXPENSE OF THE CONTRACTOR.

WYOMING SPRINGS
SEGEMENT 1
ROUND ROCK, TX

ROUND ROCK
TEXAS

halff
13620 BRIARWICK DR
BLDG C, STE 100
AUSTIN, TX 78729
(512) 777-4600
TBPELS FIRM #312

Revision No.	Date	Description

STATE OF TEXAS
TOBIN L. FOX
0014051
LICENSED IRRIGATOR

04/05/2023

100% SUBMITTAL

Project No.:	36179
Issued:	4/7/2023
Drawn By:	WC
Checked By:	TF
Scale:	1"=40'

Sheet Title

IRRIGATION PLAN
SHEET 4 OF 6

480

Sheet Number

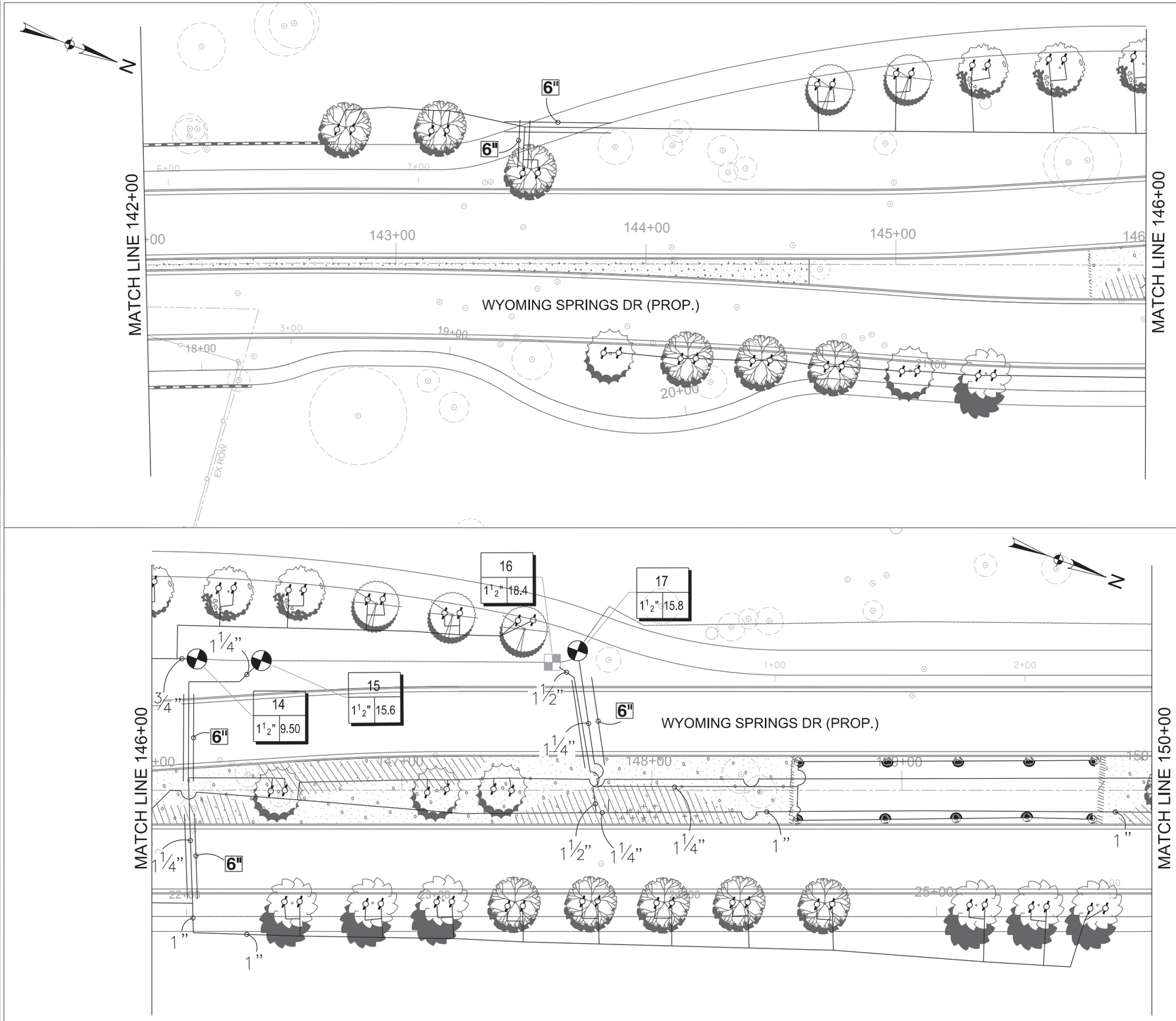

0 20 40 60 80

SCALE: 1"=40'

NOTES

1. REFER TO CIVIL DRAWINGS FOR PROPOSED / EXISTING HARDSCAPE CONDITIONS.
2. IRRIGATION PLAN IS DIAGRAMMATIC IN NATURE. CONTRACTOR SHALL BE RESPONSIBLE FOR ACCOMPLISHING FULL COVERAGE IN ALL AREAS WITH SPECIFIED EQUIPMENT. ANY DISCREPENCIES IN THE PLAN SHOULD BE BROUGHT TO THE LICENSED IRRIGATOR'S ATTENTION BEFORE BID.
3. ENHANCED IRRIGATION AREAS ARE ASSUMED TO CONTAIN ANY COMBINATION OF IRRIGATION STYLES.(DRIP, SRAY, ROTOR, BUBBLERS, ETC.).
4. PROPOSED TREES TO HAVE 2 BUBBLERS PER TREE, TYP.

WYOMING SPRINGS
SEGEMENT 1
ROUND ROCK, TX

ROUND ROCK TEXAS

halff
13620 BRANDYWICK DR
BLDG C, STE 100
AUSTIN, TX 78729
(512) 777-4600
TBPELS FIRM #312

Revision No.	Date	Description

STATE OF TEXAS
TOBIN L. FOX
0014051
LICENSED IRRIGATOR

04/05/2023

100% SUBMITTAL

811 Know what's **below.** **Call** before you dig.

THE INFORMATION SHOWN ON THESE DRAWINGS INDICATING SIZE, TYPE AND LOCATION OF UNDERGROUND, SURFACE, AND AERIAL UTILITIES IS NOT GUARANTEED TO BE EXACT OR COMPLETE. THE CONTRACTOR SHALL CONTACT THE ROUND ROCK AREA "ONE CALL" SYSTEM AT 1-800-344-8377 (DIG TESS) 48 HOURS PRIOR TO BEGINNING ANY EXCAVATION FOR EXISTING UTILITY LOCATIONS. THE CONTRACTOR SHALL ALSO BE FULLY RESPONSIBLE FOR FIELD VERIFYING LOCATIONS AND ELEVATIONS OF ALL EXISTING UTILITIES AFFECTED BY CONSTRUCTION FOR THIS PROJECT IN ORDER TO AVOID DAMAGING THOSE UTILITIES, AND SHALL IMMEDIATELY ARRANGE FOR REPAIR AND RESTORATION OF CONTRACTOR-DAMAGED UTILITIES TO THE UTILITY COMPANY'S APPROVAL AT THE EXPENSE OF THE CONTRACTOR.

Project No.:	36179
Issued:	4/7/2023
Drawn By:	WC
Checked By:	TF
Scale:	1"=40'

Sheet Title

IRRIGATION PLAN
SHEET 5 OF 6

481

Sheet Number

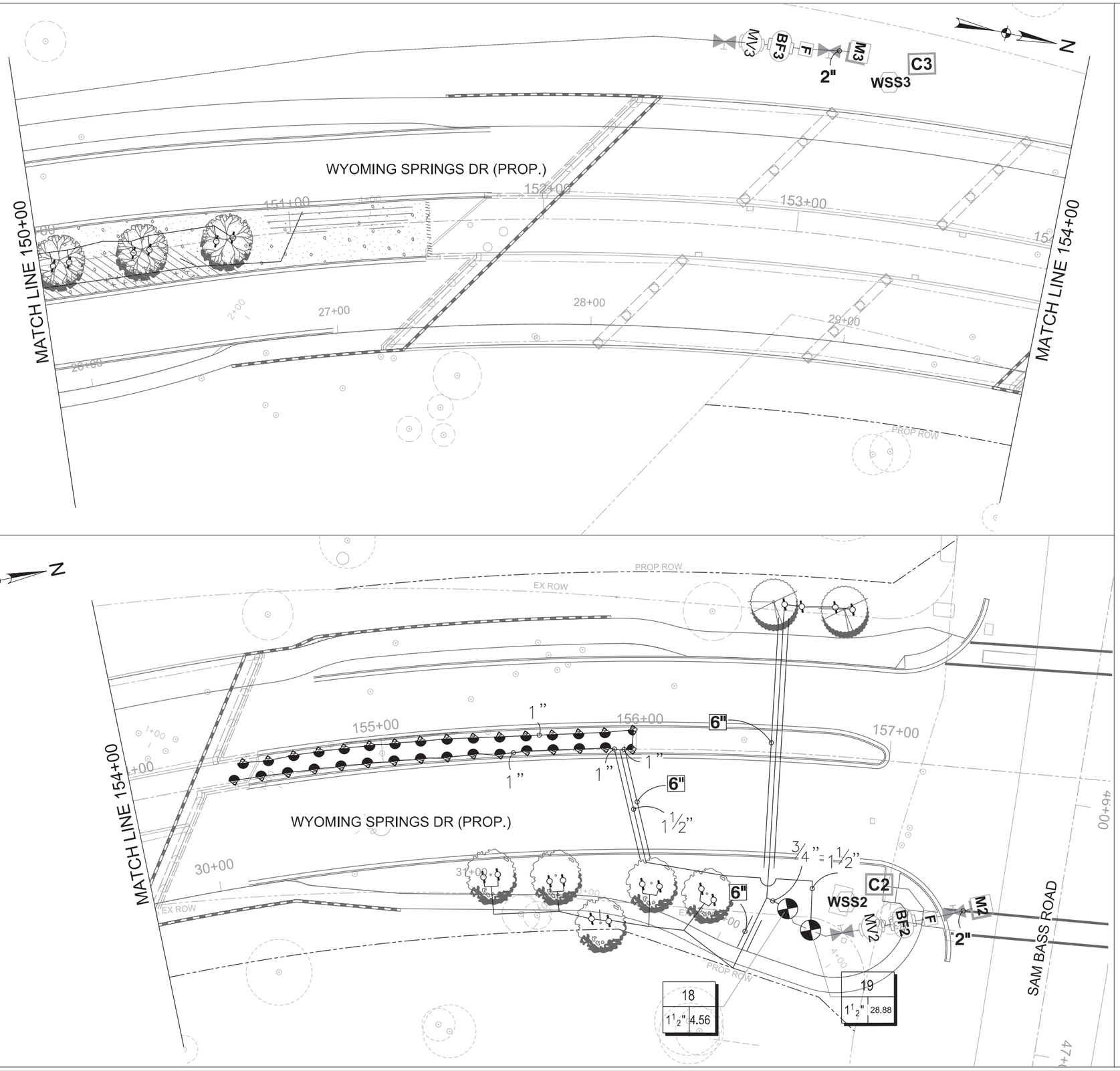

0 20 40 60 80

SCALE: 1"=40'

NOTES

1. REFER TO CIVIL DRAWINGS FOR PROPOSED / EXISTING HARDSCAPE CONDITIONS.
2. IRRIGATION PLAN IS DIAGRAMMATIC IN NATURE. CONTRACTOR SHALL BE RESPONSIBLE FOR ACCOMPLISHING FULL COVERAGE IN ALL AREAS WITH SPECIFIED EQUIPMENT. ANY DISCREPENCIES IN THE PLAN SHOULD BE BROUGHT TO THE LICENSED IRRIGATOR'S ATTENTION BEFORE BID.
3. ENHANCED IRRIGATION AREAS ARE ASSUMED TO CONTAIN ANY COMBINATION OF IRRIGATION STYLES,(DRIP, SRAY, ROTOR, BUBBLERS, ETC.).
4. PROPOSED TREES TO HAVE 2 BUBBLERS PER TREE, TYP.

WYOMING SPRINGS
SEGEMENT 1
ROUND ROCK, TX

ROUND ROCK
TEXAS

halff
13620 BRANTWICK DR
BLDG C, STE 100
AUSTIN, TX 78729
(512) 777-4600
TBPELS FIRM #312

Revision No.	Date	Description

STATE OF TEXAS
TOBIN L. FOX
0014051
LICENSED IRRIGATOR

04/05/2023

100% SUBMITTAL

811
Know what's **below.**
Call before you dig.

THE INFORMATION SHOWN ON THESE DRAWINGS INDICATING SIZE, TYPE AND LOCATION OF UNDERGROUND, SURFACE, AND AERIAL UTILITIES IS NOT GUARANTEED TO BE EXACT OR COMPLETE. THE CONTRACTOR SHALL CONTACT THE ROUND ROCK AREA "ONE CALL" SYSTEM AT 1-800-344-8377 (DIG TESS) 48 HOURS PRIOR TO BEGINNING ANY EXCAVATION FOR EXISTING UTILITY LOCATIONS. THE CONTRACTOR SHALL ALSO BE FULLY RESPONSIBLE FOR FIELD VERIFYING LOCATIONS AND ELEVATIONS OF ALL EXISTING UTILITIES AFFECTED BY CONSTRUCTION FOR THIS PROJECT IN ORDER TO AVOID DAMAGING THOSE UTILITIES, AND SHALL IMMEDIATELY ARRANGE FOR REPAIR AND RESTORATION OF CONTRACTOR-DAMAGED UTILITIES TO THE UTILITY COMPANY'S APPROVAL AT THE EXPENSE OF THE CONTRACTOR.

Project No.:	36179
Issued:	4/7/2023
Drawn By:	WC
Checked By:	TF
Scale:	1"=40'

Sheet Title

IRRIGATION PLAN
SHEET 6 OF 6

482

Sheet Number

IRRIGATION GENERAL NOTES

1. THE CONTRACTOR SHALL LOCATE AND VERIFY THE EXISTENCE OF ALL UTILITIES PRIOR TO INITIATING WORK.
2. THE CONTRACTOR SHALL BE RESPONSIBLE FOR ANY DAMAGE OR INTERRUPTION IN SERVICE CAUSED BY HIS EXCAVATIONS AND/OR WORK.
3. IRRIGATION PLAN IS DIAGRAMMATIC IN NATURE. CONTRACTOR SHALL BE RESPONSIBLE FOR ACCOMPLISHING FULL COVERAGE IN ALL AREAS WITH SPECIFIED EQUIPMENT. ANY DISCREPANCIES IN THE PLAN SHOULD BE BROUGHT TO THE LICENSED IRRIGATOR'S ATTENTION BEFORE BID.
4. WHERE TREES, LIGHT STANDARDS, ETC. ARE AN OBSTRUCTION OF PIPING AND DRIP EMITTERS THE IRRIGATION SHALL BE ADJUSTED AND/OR RELOCATED AS NECESSARY TO OBTAIN FULL COVERAGE WITH MINIMAL OVER SPRAY INTO NON-LANDSCAPE AREAS OR ONTO HARD CONSTRUCTION.
5. ALL FITTINGS AND NECESSARY EQUIPMENT REQUIRED TO MAKE THIS IRRIGATION SYSTEM OPERATE PROPERLY AND TO COMPLY WITH LOCAL AND STATE CODES ARE INCIDENTAL TO THESE PLANS AND ARE THE CONTRACTOR'S RESPONSIBILITY. CONTRACTOR SHALL FURNISH ALL LABOR, MATERIALS, AND EQUIPMENT NECESSARY TO CONSTRUCT PROPOSED IRRIGATION SYSTEM IN ACCORDANCE WITH PLANS, WRITTEN SPECIFICATIONS, AND DETAILS.
6. THIS IRRIGATION SYSTEM WAS DESIGNED FOR A MINIMUM STATIC PRESSURE AT THE POINT OF CONNECTION AS INDICATED ON THE PLANS. THE CONTRACTOR SHALL VERIFY ACTUAL PSI AND DELIVER RESULTS TO THE LICENSED IRRIGATOR PRIOR TO CONSTRUCTION. IN THE EVENT THE ACTUAL PSI IS LESS THAN WHAT IS SPECIFIED ON THE PLANS THE CONTRACTOR SHALL RECEIVE DIRECTION FROM THE LICENSED IRRIGATOR REGARDING DESIGN MODIFICATIONS IF NECESSARY.
7. CONTRACTOR WILL BE HELD LIABLE FOR GAINING ACCESS UNDER ALL PAVEMENTS. IF SLEEVES ARE INDICATED ON THE PLANS THEY SHOULD BE VERIFIED FOR ACCESSIBILITY AND PASSIBILITY BEFORE BID IS MADE, IF NOT, THE CONTRACTOR SHALL COORDINATE THE INSTALLATION OF SLEEVE PIPING WITH ALL TRADES TO INSURE THAT SLEEVES ARE INSTALLED PROPERLY PRIOR TO INSTALLATION OF CURB AND GUTTER, ASPHALT PAVING, SIDEWALKS, CONCRETE PADS, ETC.
8. THE CONTRACTOR SHALL LOCATE AND VERIFY WATER SUPPLY TO WHICH THE IRRIGATION SYSTEM WILL CONNECT. ALL EQUIPMENT AND INSTALLATION METHODS SHALL COMPLY WITH ALL LOCAL, REGIONAL, STATE, AND FEDERAL GUIDELINES.
9. CONTRACTOR IS RESPONSIBLE FOR ALL CONNECTIONS AND METERS REQUIRED FOR THE FULL IMPLEMENTATION OF THE SYSTEM.
10. THE CONTRACTOR SHALL COORDINATE WATER "TAP-IN" LOCATIONS AND CONTROLLER CONNECTIONS WITH THE OWNER AND MUNICIPALITY PRIOR TO INSTALLATION.
11. ALL VALVES SHALL BE LOCATED IN PLANTING AREAS WHERE SHOWN AND ALL PIPING SHALL BE INSTALLED PRIOR TO LANDSCAPE PLANTING WORK.
12. NO TEES, ELLS, OR OTHER TURNS IN PIPING SHALL BE LOCATED UNDER PAVING.
13. CONTRACTOR SHALL SIZE VALVE BOXES TO HOUSE ENTIRE IRRIGATION ASSEMBLIES AS SHOWN. VALVE BOX EXTENSIONS AS MANUFACTURED BY THE VALVE BOX SUPPLIER SHALL BE INSTALLED TO MAINTAIN THE VALVE BOX COVER FLUSH WITH THE FINISHED GRADE AND THE VALVE BOX BASE A MINIMUM OF 2 INCHES BELOW THE BOTTOM OF ANY IRRIGATION ASSEMBLY.
14. PIPE SIZES SHOWN AT POINTS OF CONNECTION AND WHERE CHANGES IN PIPE SIZE OCCUR. ALL PIPES SHALL BE THE SIZE OF THE LAST PRECEDING SIZE CALLED OUT UPSTREAM OF EACH SECTION OF PIPE. SMALLEST SECTIONS OF UNLABELED PIPE TO BE 3/4".
15. EACH CONTROLLER WILL HAVE AN INDEPENDENT COMMON WIRE.
16. SPLICING OF REMOTE CONTROL VALVE WIRES IS NOT ALLOWED BETWEEN CONTROLLER AND VALVE BOX. WIRES MUST BE CONTINUOUS FROM CONTROLLER TO REMOTE CONTROL VALVE WITHOUT SPLICING.
17. CONTRACTOR TO THOROUGHLY FLUSH ALL LINES UNTIL WATER RUNS CLEAR PRIOR TO INSTALLING HEADS AND EMITTERS.
18. ON DRIP IRRIGATION SYSTEMS, ALL WATER LINES SHALL BE THOROUGHLY FLUSHED UNTIL WATER RUNS CLEAR BEFORE INSTALLING DRIPLINE.
19. ALL TRENCH BACKFILL SHALL BE CLEAN MATERIAL FROM EXCAVATION BACKFILL. TRENCH IS TO BE EVEN WITH EXISTING GRADES AFTER COMPACTION.
20. TRENCH BACKFILL MATERIAL SHALL BE WATER SETTLED AND COMPACTED.
21. ALL REMOTE CONTROL VALVE WIRES NEED TO BE LABELED AT THE VALVE W/ WEATHER (WATER) PROOF LABELS AND AT CONTROLLER WITH CORRESPONDING LABEL.
22. CONTRACTOR SHALL PLACE ALL SPRAY AND ROTARY HEADS AT LEAST 4" INSIDE FROM WALLS, AND 2" INSIDE FROM ANY CURBING, SIDEWALK, FENCING, EDGING, ETC.
23. ALL SLEEVES SHALL HAVE AN EXTRA SLEEVE OF EQUAL SIZE ADDED FOR POTENTIAL FUTURE EXPANSION AND ADDITION.
24. ADJUSTABLE FLOW CONTROLS SHALL BE REQUIRED ON CIRCUIT REMOTE CONTROL VALVES. A PRESSURE REGULATION COMPONENT(S) SHALL BE REQUIRED WHERE STATIC PRESSURE EXCEEDS MANUFACTURER'S RECOMMENDED OPERATING RANGE.
25. HEADS SHALL HAVE MATCHED PRECIPITATION RATES WITHIN THE CONTROL VALVE CIRCUIT, EITHER BY DESIGN OR MANUFACTURER'S PRODUCT.
26. SERVICEABLE CHECK VALVES SHALL BE REQUIRED WHERE ELEVATION DIFFERENTIAL MAY CAUSE LOW HEAD DRAINAGE ADJACENT TO PAVING AREAS.
27. ALL AUTOMATIC IRRIGATION SYSTEMS SHALL BE EQUIPPED WITH A CONTROLLER CAPABLE OF DUAL OR MULTIPLE PROGRAMMING. CONTROLLERS SHALL HAVE MULTIPLE CYCLE START CAPACITY AND A FLEXIBLE CALENDAR PROGRAM, INCLUDING THE CAPABILITY OF BEING SET TO WATER EVERY FIVE DAYS. ALL AUTOMATIC IRRIGATION SYSTEMS SHALL BE EQUIPPED WITH A RAIN AND FREEZE SENSOR SHUTOFF DEVICE LOCATED WHERE RAINFALL IS UNOBSTRUCTED AND ADJUSTED TO ONE-FOURTH INCH SETTING. CONTRACTOR TO COORDINATE AND PROVIDE ELECTRIC SERVICE FOR AUTOMATIC CONTROLLER(S).
28. PROVIDE LAMINATED COPY OF THE RECOMMENDED SETTINGS AND A SCHEDULE TO INCLUDE:
    a) ESTIMATED MONTHLY WATER USE (IN GALLONS PER APPLICATION).
    b) PRECIPITATION RATE FOR THE VALVE CIRCUIT.
    c) MONTHLY IRRIGATION SCHEDULE FOR THE PLANT ESTABLISHMENT PERIOD (FIRST THREE MONTHS) AND RECOMMENDED YEARLY WATERING SCHEDULE, INCLUDING SEASONAL ADJUSTMENTS.
29. IRRIGATION CONTRACTOR TO PROVIDE SLEEVES AS SHOWN TO COMPLETE THIS PROJECT. COORDINATE AND MARK ALL SLEEVE ENDS WITH SAW-CUT IN FIELD WITH THE GENERAL CONTRACTOR.
30. 2'-0" MIN. OFFSET OF MAINLINE FROM BACK OF CURB TYP.
31. IRRIGATION CONTRACTOR SHALL FOLLOW ALL TCEQ CODES AND REGULATIONS.
32. ALL BACKFLOW PREVENTION ASSEMBLIES/DEVICES SHALL BE TESTED PER CODES.
33. ALL METER AND TAP IN LOCATIONS TO BE COORDINATED AND VERIFIED WITH OWNER AND LANDSCAPE ARCHITECT PRIOR TO CONSTRUCTION.
34. ALL CONTROLLER AND ACCESSORY LOCATIONS TO BE COORDINATED AND VERIFIED WITH OWNER AND LANDSCAPE ARCHITECT PRIOR TO CONSTRUCTION.
35. ALL LOCAL MUNICIPAL AND STATE LAWS, RULES AND REGULATIONS GOVERNING OR RELATING TO ANY PORTION OF THIS WORK ARE HEREBY INCORPORATED INTO AND MADE A PART OF THESE SPECIFICATIONS AND THEIR PROVISIONS SHALL BE CARRIED OUT BY THE CONTRACTOR.
36. THE CONTRACTOR SHALL OBTAIN ALL NECESSARY PERMITS REQUIRED TO PERFORM THE WORK INDICATED HEREIN BEFORE BEGINNING WORK.
37. THE CONTRACTOR SHALL VERIFY THE LOCATIONS OF ALL EXISTING UTILITIES, STRUCTURES AND SERVICES BEFORE COMMENCING WORK. THE LOCATIONS OF UTILITIES, STRUCTURES AND SERVICES SHOWN IN THESE PLANS ARE APPROXIMATE ONLY. ANY DISCREPANCIES BETWEEN THESE PLANS AND ACTUAL FIELD CONDITIONS SHALL BE REPORTED TO THE OWNER'S REPRESENTATIVE.
38. THE CONTRACTOR SHALL NOT WILLFULLY INSTALL ANY EQUIPMENT AS SHOWN ON THE PLANS WHEN IT IS OBVIOUS IN THE FIELD THAT UNKNOWN CONDITIONS EXIST THAT WERE NOT EVIDENT AT THE TIME THESE PLANS WERE PREPARED. ANY SUCH CONDITIONS SHALL BE BROUGHT TO THE ATTENTION OF THE OWNER'S REPRESENTATIVE PRIOR TO ANY WORK OR THE IRRIGATION CONTRACTOR SHALL ASSUME ALL RESPONSIBILITY FOR ANY FIELD CHANGES DEEMED NECESSARY BY THE OWNER.
39. THE CONTRACTOR SHALL OBTAIN THE PERTINENT ENGINEERING SITE DEVELOPMENT AND/OR ARCHITECTURAL PLANS BEFORE BEGINNING WORK.
40. ALL IRRIGATION SYSTEM COMPONENTS SHOULD BE DESIGNED AND INSTALLED FOR POTABLE WATER APPLICATION. CONTRACTOR SHALL INSTALL IRRIGATION SYSTEM IN COMPLIANCE WITH ALL CURRENT TEXAS COMMISSION ON ENVIRONMENTAL QUALITY (TCEQ) STANDARDS AND REGULATIONS FOR POTABLE WATER USE.
41. INSTALL ALL EQUIPMENT AS SHOWN IN THE DETAILS AND SPECIFICATIONS OR PER MANUFACTURER STANDARD SPECIFICATIONS. CONTRACTOR SHALL BE RESPONSIBLE TO COMPLY WITH LOCAL CITY, COUNTY AND STATE REQUIREMENTS FOR BOTH EQUIPMENT AND INSTALLATION.
42. CONTRACTOR SHALL BE RESPONSIBLE FOR ELECTRICAL CONNECTION TO CONTROLLER AND ALL OTHER ASSOCIATED TASKS NEEDED TO MAKE THE CONTROLLER OPERATIONAL. CONTROLLER TO BE EQUIPPED WITH RAIN AND FREEZE SENSOR SHUT-OFF DEVICE. THE CONTRACTOR SHALL USE PROPER GROUNDING TECHNIQUES FOR GROUNDING THE CONTROLLER AND RELATED EQUIPMENT PER MANUFACTURERS SPECIFICATIONS.
43. ALL VALVES, PIPE, AND HEADS SHOWN IN THE LEGEND (OR APPROVED EQUALS) SHALL BE USED IN THE DESIGN OF THE IRRIGATION SYSTEM. IT SHALL BE THE RESPONSIBILITY OF THE CONTRACTOR TO SIZE ALL PIPE TO ENSURE THAT THE SYSTEM, HEADS AND BUBBLERS USED IN THE SYSTEM ADHERE TO THE MANUFACTURER'S SPECIFICATIONS WITH REGARDS TO, BUT NOT LIMITED TO, FLOW AND PRESSURE.
44. CONTRACTOR TO BANK VALVES/BOXES, IN NEAT AND ORDERLY MANNER INSIDE LANDSCAPE PLANTING AREAS. FOR TURF, COORDINATE PREFERRED LOCATION WITH OWNER PRIOR TO DESIGN AND/OR INSTALLATION. NO VALVES/BOXES SHALL BE PERMITTED WITHIN PLAYING FIELDS.
45. SPRINKLER HEAD SPACING SHALL BE DESIGNED AND PROVIDE FOR "HEAD-TO-HEAD" COVERAGE AND ADJUSTED FOR PREVAILING WINDS. THE SYSTEM SHALL PROMOTE MINIMAL RUN-OFF AND MINIMAL OVER SPRAY ONTO NON-IRRIGATED AREAS (I.E.-PAVING, WALKWAYS, BUILDING). TURF, LANDSCAPE BEDS AND TREES SHALL BE ZONED SEPARATELY. ALL HEADS ARE TO BE INSTALLED WITH THE NOZZLE, SCREEN AND ARCS SHOWN ON PLANS OR DETERMINED IN THE FIELD FOR HEAD-TO-HEAD COVERAGE. HEADS MUST HAVE MATCHED PRECIPITATION RATES WITHIN EACH CONTROL VALVE CIRCUIT.
46. ALL IRRIGATION LINES AND SLEEVES SHALL BE AT A DEPTH OF 18"-24". DO NOT ROUTE PIPE DOWN THE CENTER OF THE TREE AND SHRUB BED AREAS; ALLOW FOR TREE AND SHRUB BED PLANTINGS. AVOID ANY CONFLICTS BETWEEN THE IRRIGATION SYSTEM, PLANTING, UTILITIES, AND ARCHITECTURAL FEATURES.
47. ALL PIPE UNDER PAVED AREAS TO BE INSTALLED IN SLEEVING PER PLAN CALLOUTS.. ALL WIRE UNDER PAVED AREAS TO BE INSTALLED IN A SCH. 40 SLEEVE THE SIZE REQUIRED TO EASILY PULL WIRE THROUGH. ALL SLEEVES TO BE INSTALLED WITH A MIN. DEPTH AS SHOWN ON THE SLEEVING DETAILS.
48. ALL PVC LATERAL LINES SHALL BE FLUSHED BEFORE INSTALLING DRIP TUBING..
49. CONTRACTOR SHALL EXERCISE EXTREME CARE WHEN EXCAVATING NEAR TREES. NO MECHANICAL TRENCHING SHALL BE PERMITTED BELOW THE DRIPLINE/CANOPY OF EXISTING TREES. CONTRACTOR SHALL ADJUST TRENCH PATH AND/OR EXCAVATE BY HAND TO AVOID DAMAGE TO EXISTING TREE ROOT SYSTEMS.
50. ALL MAINLINE AND LATERAL TRENCHES SHALL REMAIN OPEN UNTIL INSPECTED AND APPROVED BY OWNER AND/OR LANDSCAPE ARCHITECT.
51. COMPACTION OF THE PIPE TRENCHES SHALL BE SUFFICIENT TO LIMIT SHORT TERM SETTLING OF THE BACKFILL TO NO MORE THAN 1-INCH. THE CONTRACTOR SHALL CORRECT SETTLING GREATER THAN THIS WITHOUT ADDITIONAL COMPENSATION.
52. CONTRACTOR IS RESPONSIBLE FOR PROVIDING AS-BUILT DRAWINGS AND SPECIFICATIONS FOR IRRIGATION SYSTEM PRIOR TO PROJECT CLOSE-OUT.
53. ANY EXISTING IRRIGATION THAT CONFLICTS WITH PROPOSED DESIGN IS TO BE ADJUSTED AND REPLACED TO PROVIDE COMPLETE COVERAGE OF EXISTING IRRIGATED AREAS. ALL AREAS IN QUESTION ARE TO BE COORDINATED WITH OWNER AND LICENSED IRRIGATOR PRIOR TO CONSTRUCTION.
54. WARRANTY : CONTRACTOR SHALL PROVIDE A ONE-YEAR REPLACEMENT WARRANTY FOR ALL IRRIGATION MATERIALS INCLUDING INSTALLATION. WARRANTY SHALL NOT COVER DAMAGE RESULTING FROM IMPROPER OPERATION OR MAINTENANCE PRACTICES BY OWNER.
55. IRRIGATION SPECIFICATIONS : WHEN WRITTEN TECHNICAL SPECIFICATION ARE PROVIDED AND CONFLICT WITH THESE PLANS, THE SPECIFICATIONS SHALL PREVAIL FOR THIS PROJECT.

DRIP IRRIGATION NOTES

1. IRRIGATION CONTRACTOR IS TO BE A STATE OF TEXAS LICENSED IRRIGATOR, AND IS TO FOLLOW ALL TCEQ CODES AND REGULATIONS. CONTRACTOR IS RESPONSIBLE FOR PROVIDING SHOP DRAWINGS AND SPECIFICATIONS FOR IRRIGATION SYSTEM DESIGN INCLUDING PIPE SIZES/LOCATIONS, EMITTERS, VALVES, CALCULATIONS AND WAER BUDGET. SHOP DRAWINGS SHALL BE REVIEWED/APPROVED BY PROJECT LANDSCAPE ARCHITECT / OWNER PRIOR TO INSTALLATION.
2. LATERAL LINES TO BE OFFSET 18" MIN. FROM HARDSCAPE / PAVED AREAS.
3. SPACING BETWEEN LATERAL LINES TO BE 12" MAX.
4. EMITTERS TO BE SPACED 24", TYP. (MIN. 18" , MAX. 30") TO INSURE OPTIMAL WETTING OF THE ROOT ZONE.
5. ALL CONNECTIONS BETWEEN DRIP TUBING SHALL BE MADE USING MDCF FITTINGS.
6. PROVIDE EASY FIT COMPRESSION FLUSH CAPS AS REQUIRED.
7. ALWAYS USE STAKES AND DIFFUSER BUG CAPS FOR LONGER RELIABILITY.
8. REFER TO IRRIGATION NOTES FOR ADDITIONAL REQUIREMENTS.
9. ALL DRIP ZONES TO HAVE DRIPLINE FLUSH POINT AND AIR RELIEF VALVE. (REF. DETAILS FOR ADDITIONAL INFORMATION)

TEXAS ONE CALL SYSTEM
1-800-245-4545

UNDER PENALTY OF LAW, THE CONTRACTOR IS REQUIRED TO CONTACT THE TEXAS ONE CALL SYSTEM AT LEAST 48 HOURS BEFORE STARTING EXCAVATION. PROJECTS IN THE CITY OF AUSTIN JURISDICTION USE AUSTIN ONE CALL @ 1-800-344-8377

SYSTEM DESIGN

SYSTEM 1:
DESIGN GPM: 83
DESIGN PSI: STATIC 120

SYSTEM 2:
DESIGN GPM: 83
DESIGN PSI: STATIC 120

SYSTEM 3:
DESIGN GPM: 83
DESIGN PSI: STATIC 120

IF ANY OF THESE NUMBERS ARE DIFFERENT DURING INSTALLATION NOTIFY IRRIGATION DESIGNER IMMEDIATELY.

WYOMING SPRINGS
SEGMENT 1
ROUND ROCK, TX

ROUND ROCK TEXAS

halff
13620 Briarwick Drive
Suite 100
Austin, Texas 78729-1102
TEL (512) 777-4600
FAX (512) 252-8141

Revision No.	Date	Description

STATE OF TEXAS
TOBIN L. FOX
0014051
LICENSED IRRIGATOR
04/05/2023

100% SUBMITTAL

Project No.:	36179
Issued:	2023/04/05
Drawn By:	WC
Checked By:	TF
Scale:	

Sheet Title
IRRIGATION NOTES

483
Sheet Number

EXISTING & SPECIFIED SPECIFICATIONS
MISCELLANEOUS DETAILS
SCHEDULES
SCHEMES
SCALES

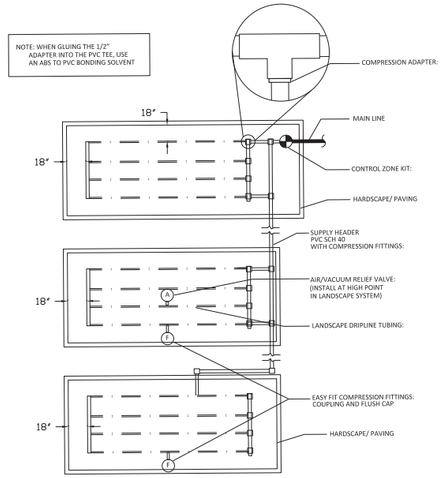

1 DRIP ZONE LAYOUT - MULTIPLE BEDS

NOT TO SCALE

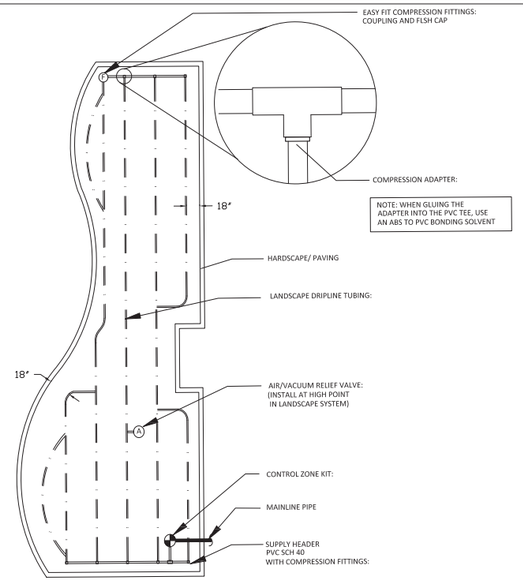

2 DRIP ZONE LAYOUT - ODD SHAPED BEDS

NOT TO SCALE

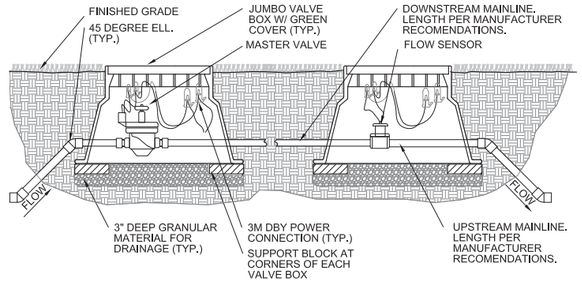

NOTES:
1. ALL WIRE TO BE INSTALLED PER LOCAL CODE.
2. TAPE AND BUNDLE WIRE EVERY TEN FEET.
3. PROVIDE EXPANSION COILS AT EACH WIRE CONNECTION IN VALVE BOX. (WRAP AROUND 1/2" PIPE 15 TIMES.)
4. COMPACT SOIL AROUND VALVE BOX TO SAME DENSITY AS UNDISTURBED ADJACENT SOIL.
5. INSTALL VALVES IN CLOSE PROXIMITY TO ADJACENT WALKS WHERE POSSIBLE.
6. ORIENT RECTANGULAR VALVE BOXES PARALLEL TO ADJACENT WALKS, CURBS, ETC.

3 MASTER VALVE AND FLOW METER DETAIL

NTS

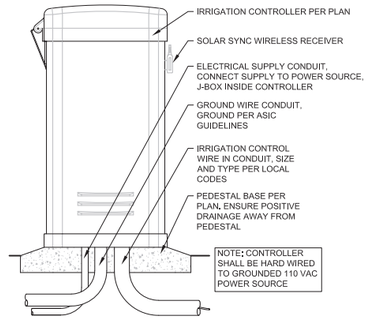

4 CONTROLLER GROUND CABINET

NTS

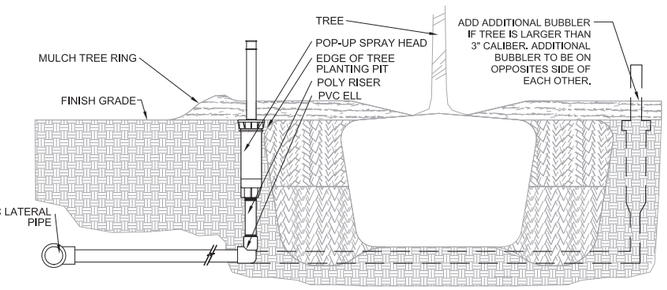

5 TREE BUBBLER

NTS

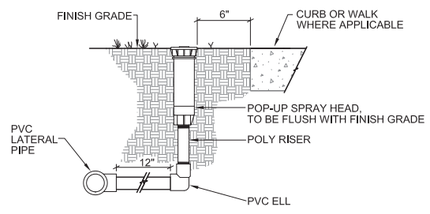

6 POP UP SPRAY HEAD

NTS

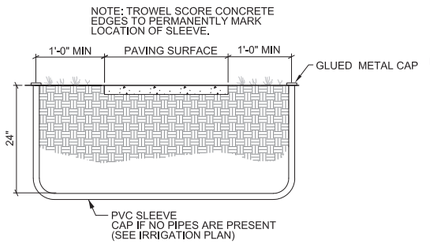

7 IRRIGATION SLEEVE DETAIL

NTS

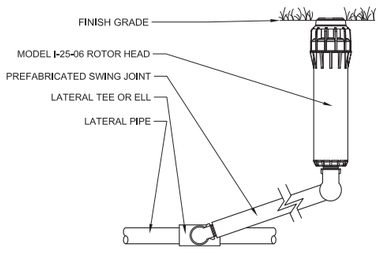

8 ROTOR SPRAY HEAD

NTS

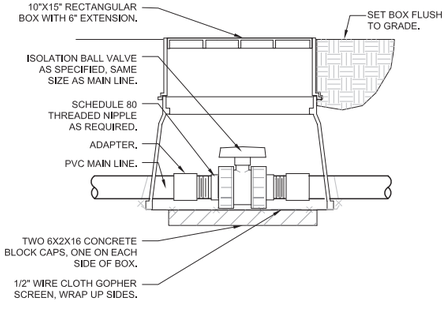

9 BALL VALVE

NTS

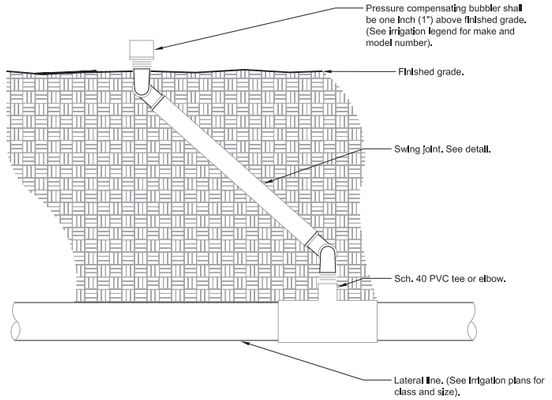

Notes:
1- All irrigation fittings shall be Sch. 40 PVC unless specified otherwise.
2- All threaded connection from Sch. 40 to Sch. 80 PVC shall be made using teflon tape.
3- Contractor shall settle soil around the bubbler and swing joint prior after installation.

10 BUBBLER ON SWING JOINT

NOT TO SCALE

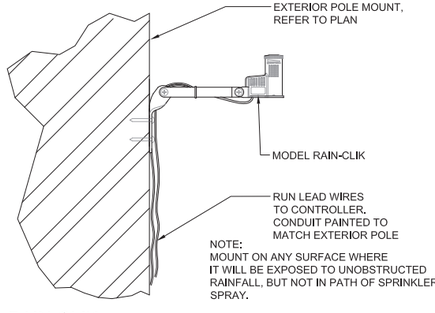

11 RAIN-CLIK

3" = 1'-0"

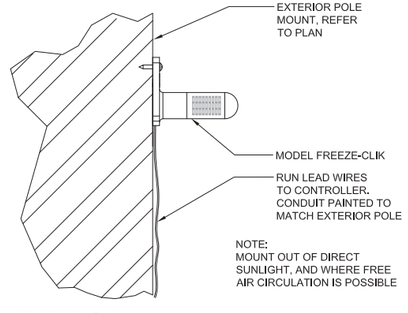

12 FREEZE-CLIK

3" = 1'-0"

WYOMING SPRINGS
SEGMENT 1
ROUND ROCK, TX

ROUND ROCK TEXAS

halff
13620 Briarwick Drive
Suite 100
Austin, Texas 78729-1102
TEL (512) 777-4600
FAX (512) 252-8141

Revision No.	Date	Description

STATE OF TEXAS
TOBIN L. FOX
00140511
LICENSED LANDSCAPE ARCHITECT
04/05/2023

100% SUBMITTAL

Project No.:	36179
Issued:	2023/04/05
Drawn By:	WC
Checked By:	TF
Scale:	

Sheet Title
IRRIGATION DETAILS SHEET 1 OF 2

484
Sheet Number

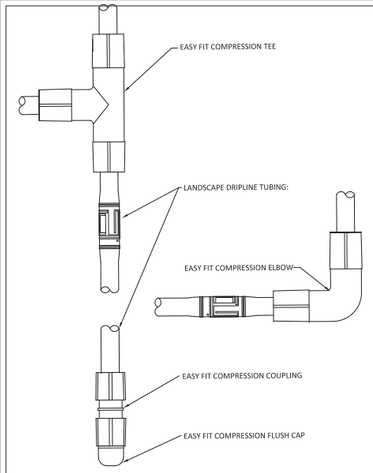

1 EASY FIT COMPRESSION FITTINGS
NOT TO SCALE

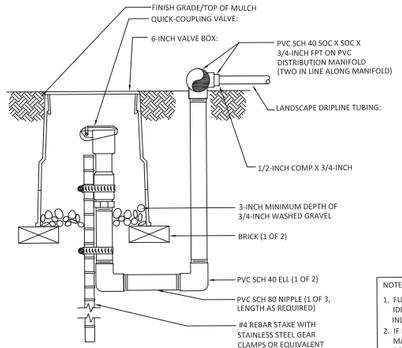

NOTES:
1. FURNISH FITTINGS AND PIPING NOMINALLY SIZED IDENTICAL TO NOMINAL QUICK COUPLING VALVE INLET SIZE.
2. IF POLYETHYLENE IS USED FOR DISTRIBUTION MANIFOLD, SUBSTITUTE INSERT X INSERT X 3/4-INCH FPT INSERT TEE FOR SCH 40 TEE.

2 DRIPLINE FLUSH POINT POTABLE SYSTEM
NOT TO SCALE

PIPE O.C.	"X"	"Y"
2" O.C.	"12"	"12"
3" O.C.	"12"	"12"
4" O.C.	"12"	"12"

NOTE:
ALL LINES 2" AND LARGER TO BE INSTALLED WITH THRUST BLOCKS AS SHOWN. TEST LINES PER SPECIFICATIONS. REF. TRENCH DETAIL FOR DEPTH AND MARKING.

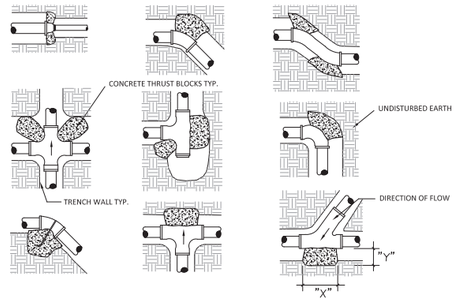

NOTES:
1. ALL CONCRETE THRUST BLOCKS SHALL BEAR AGAINST UNDISTURBED TRENCH WALL.
2. MINIMUM DISTANCE FROM PIPE TO TRENCH WALL SHALL BE 12" AT THRUST BLOCK.
3. VERTICAL DIMENSION OF BEARING AREA AGAINST TRENCH WALL OF THRUST BLOCK SHALL BE EQUAL TO THE HORZ. DIMENSION "X"
4. ALL JOINTS SHALL BE TEMPORARILY JACKED WHEN THE THRUST BLOCKS ARE POURED.
5. ALL JOINTS OF PIPE SHALL BE FREE OF CONCRETE.
6. ALL CONCRETE THRUST BLOCKS SHALL CONSIST OF 1:2:6 OF CEMENT, SAND & GRAVEL AND SHALL BE CURED A MIN. OF 24 HOURS.

3 PIPE THRUST BLOCKING (TYP.)
NOT TO SCALE

NOTES:
1. ALL SLEEVES SCH 40 PVC PIPE, PER PLANS.
2. ALL JOINTS TO BE SOLVENT WELDED AND WATERTIGHT.
3. WHEN MORE THAN ONE SLEEVE, PROVIDED 4" CLEARANCE BETWEEN SLEEVES.
4. MECHANICALLY TAMP BACKFILL TO 95% PROCTOR.
5. THE ENDS OF SLEEVES SHALL BE SEALED WITH DUCT TAPE AND HAVE MIN. #4 REBAR PLACED AT THE ENDS OF THE SLEEVES TO ENABLE POSITIVE LOCATION WITH A PIN LOCATOR
6. THE CONTRACTOR IS TO PERMANENTLY 'MARK' THE LOCATION OF ALL SLEEVES ON THE SIDEWALK, CURB, TRAIL OR ADJACENT PAVEMENT. THE 'MARK' SHALL BE A STAMPED "X" THAT IS 2" IN HEIGHT AND WIDTH. THE 'MARK' SHALL ALSO BE PLACED DIRECTLY OVER THE CENTER OF OF THE SLEEVE, IF MORE THAN ONE SLEEVE IS PROVIDED 'MARK' THE MIDDLE SLEEVE.

SECTION

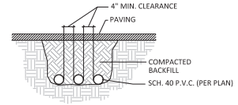

ELEVATION

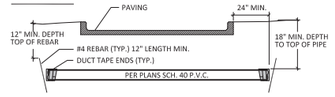

4 IRRIGATION SLEEVING (TYP.)
NOT TO SCALE

NOTES:
MAKE FLEX PVC CONNECTIONS WITH WELD-ON #795 SOLVENT

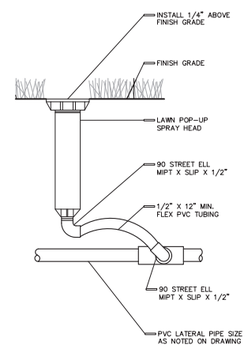

5 LAWN SPRAY HEAD
NOT TO SCALE

SECTION VIEW

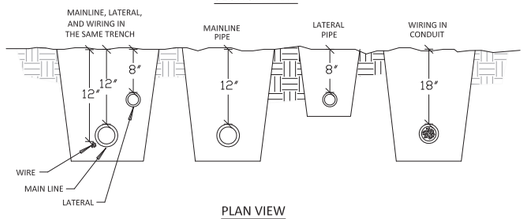

PLAN VIEW

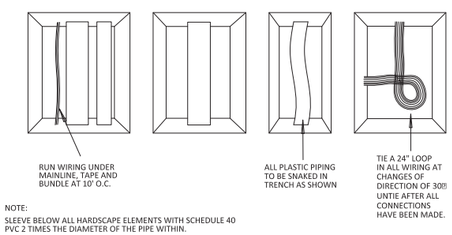

NOTE:
SLEEVE BELOW ALL HARDSCAPE ELEMENTS WITH SCHEDULE 40 PVC 2 TIMES THE DIAMETER OF THE PIPE WITHIN.

6 PIPE & WIRE TRENCHING (TYP.)
NOT TO SCALE

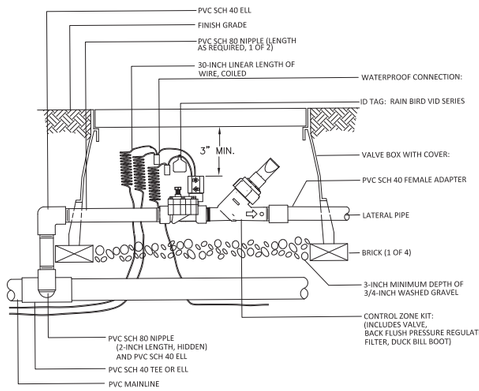

7 CONTROL ZONE KIT WITH PRESSURE REGULATING BACKFLUSH FILTER (TYP.)
NOT TO SCALE

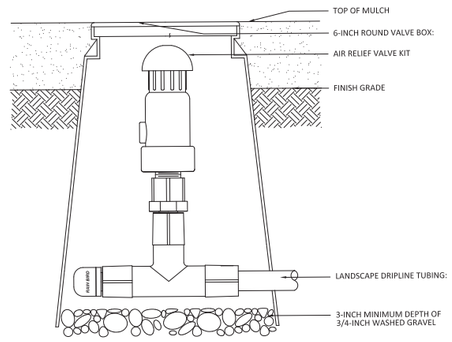

8 AIR RELIEF VALVE
NOT TO SCALE

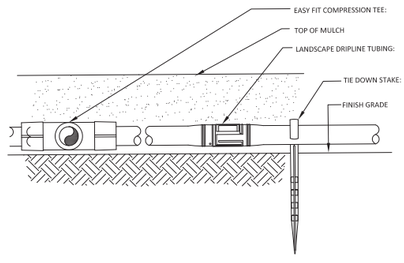

9 IRRIGATION DRIPLINE ON GRADE
NOT TO SCALE

SECTION VIEW

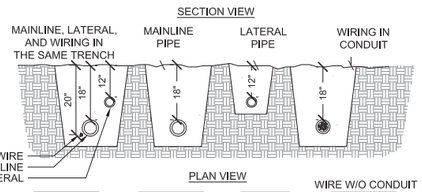

PLAN VIEW

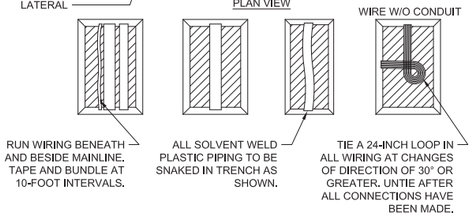

NOTES:
1. SLEEVE BELOW ALL HARDSCAPE ELEMENTS WITH SCH.40 PVC TWICE THE DIAMETER OF THE PIPE OR WIRE BUNDLE WITHIN.

10 TRENCHING DETAIL
NTS

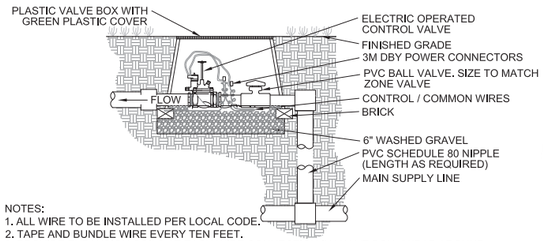

NOTES:
1. ALL WIRE TO BE INSTALLED PER LOCAL CODE.
2. TAPE AND BUNDLE WIRE EVERY TEN FEET.
3. PROVIDE EXPANSION COILS AT EACH WIRE CONNECTION IN VALVE BOX. (WRAP AROUND 1/2" PIPE 15 TIMES.)
4. COMPACT SOIL AROUND VALVE BOX TO SAME DENSITY AS UNDISTURBED ADJACENT SOIL.
5. INSTALL VALVES IN CLOSE PROXIMITY TO ADJACENT WALKS WHERE POSSIBLE.
6. ORIENT RECTANGULAR VALVE BOXES PARALLEL TO ADJACENT WALKS, CURBS, ETC.
7. INSTALLATION OF BALL VALES WILL BE SIMILAR TO INSTALLATION FOR CONTROL VALVES.

11 CONTROL VALVE DETAIL
1" = 1'-0"

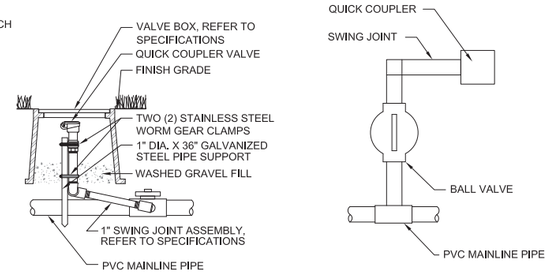

12 QUICK COUPLER VALVE
NTS

NOTE:
THE ASSEMBLY SHALL BE INSTALLED PER LOCAL CODE AND A MINIMUM OF 12" ABOVE GRADE AND IN A LOCATION IN WHERE IT CANNOT BE SUBMERGED

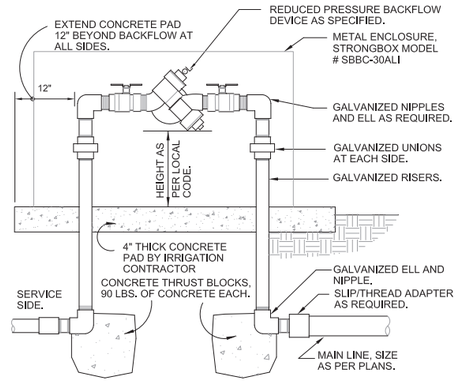

13 REDUCED PRESSURE BACKFLOW
1 1/2" = 1'-0"

COPYRIGHT NOTICE

EPOXY-LINED STEEL PIPE

EPOXY-LINED DUCTILE IRON PIPE

PLASTIC PIPE

SLEEVES

STRAPS

GASKETS

WYOMING SPRINGS
SEGMENT 1
ROUND ROCK, TX

ROUND ROCK TEXAS

halff
13620 Briarwick Drive
Suite 100
Austin, Texas 78729-1102
TEL (512) 777-4600
FAX (512) 252-8141

Revision No.	Date	Description

STATE OF TEXAS
TOBIN L. FOX
00140511
LICENSED IRRIGATOR
04/05/2023

100% SUBMITTAL

Project No.:	36179
Issued:	2023/04/05
Drawn By:	WC
Checked By:	TF
Scale:	

Sheet Title
IRRIGATION DETAILS
SHEET 2 OF 2

485
Sheet Number

CRITICAL ANALYSIS

Generated: 2022-04-13 13:53

P.O.C. NUMBER: 01
Water Source Information:

FLOW AVAILABLE
Water Meter Size: 2"
Flow Available 120 GPM

PRESSURE AVAILABLE
Static Pressure at POC: 85 PSI
Elevation Change: 5 ft
Service Line Size: 6"
Length of Service Line: 20 ft
Pressure Available: 83 psi

DESIGN ANALYSIS
Maximum Station Flow: 21.93 GPM
Flow Available at POC: 120 GPM
Residual Flow Available: 98.07 GPM

Pressure Req. at Critical Station: 52.89 PSI
Loss for Fittings: 0.19 PSI
Loss for Main Line: 1.94 PSI
Loss for POC to Valve Elevation: 0 PSI
Loss for Backflow: 11.3 PSI
Loss for Master Valve: 0.8 PSI
Loss for Water Meter: 0.4 PSI
Critical Station Pressure at POC: 67.52 PSI
Pressure Available: 83 PSI
Residual Pressure Available: 15.48 PSI

P.O.C. NUMBER: 02
Water Source Information:

FLOW AVAILABLE
Water Meter Size: 2"
Flow Available 120 GPM

PRESSURE AVAILABLE
Static Pressure at POC: 85 PSI
Elevation Change: 5 ft
Service Line Size: 6"
Length of Service Line: 20 ft
Pressure Available: 83 psi

DESIGN ANALYSIS
Maximum Station Flow: 21.99 GPM
Flow Available at POC: 120 GPM
Residual Flow Available: 98.01 GPM

Pressure Req. at Critical Station: 38.77 PSI
Loss for Fittings: 0.03 PSI
Loss for Main Line: 0.27 PSI
Loss for POC to Valve Elevation: 0 PSI
Loss for Backflow: 11.3 PSI
Loss for Master Valve: 0.8 PSI
Loss for Water Meter: 0.48 PSI
Critical Station Pressure at POC: 51.65 PSI
Pressure Available: 83 PSI
Residual Pressure Available: 31.35 PSI

P.O.C. NUMBER: 03
Water Source Information:

FLOW AVAILABLE
Water Meter Size: 2"
Flow Available 120 GPM

PRESSURE AVAILABLE
Static Pressure at POC: 85 PSI
Elevation Change: 5 ft
Service Line Size: 6"
Length of Service Line: 20 ft
Pressure Available: 83 psi

DESIGN ANALYSIS
Maximum Station Flow: 18.44 GPM
Flow Available at POC: 120 GPM
Residual Flow Available: 101.56 GPM

Pressure Req. at Critical Station: 46.94 PSI
Loss for Fittings: 0.17 PSI
Loss for Main Line: 1.68 PSI
Loss for POC to Valve Elevation: 0 PSI
Loss for Backflow: 11.3 PSI
Loss for Master Valve: 0.8 PSI
Loss for Water Meter: 0.4 PSI
Critical Station Pressure at POC: 61.29 PSI
Pressure Available: 83 PSI
Residual Pressure Available: 21.71 PSI

IRRIGATION SCHEDULE

SYMBOL	MANUFACTURER/MODEL/DESCRIPTION	QTY	PSI
	Hunter MP1000 PROS-04-PRS30-CV-F Turf Rotator, 4" pop-up with check valve, floguard, pressure regulated to 30 psi, MP Rotator nozzle on PRS30 body. M=Maroon adj arc 90 to 210, L=Light Blue 210 to 270 arc, O=Olive 360 arc.	26	30
	Hunter MP2000 PROS-04-PRS30-CV-F Turf Rotator, 4" pop-up with factory installed check valve, floguard, pressure regulated to 30 psi, MP Rotator nozzle on PRS30 body. K=Black adj arc 90-210, G=Green adj arc 210-270, R=Red 360 arc.	8	30
	Hunter MP3000 PROS-04-PRS30-CV-F Turf Rotator, 4" pop-up with factory installed check valve, floguard, pressure regulated to 30 psi, MP Rotator nozzle on PRS30 body. B=Blue adj arc 90-210, Y=Yellow adj arc 210-270, A=Gray 360 arc.	48	30
	Hunter MP815 PROS-04-PRS30-CV-F Turf Rotator, 4" pop-up with check valve, floguard, pressure regulated to 30 psi, MP Rotator nozzle on PRS30 body. M=Maroon and Gray adj arc 90 to 210, L=Light Blue and Gray 210 to 270 arc, O=Olive and Gray 360 arc.	32	30
CST	Hunter PROS-00-5-CST-B ST Dual-Stream Bubbler, fixed riser.	227	30
SYMBOL	MANUFACTURER/MODEL/DESCRIPTION	QTY	
	Hunter ICZ-151-XL-40 Drip Control Zone Kit. 1-1/2" ICV Globe Valve with 1" HY100 filter system. Pressure Regulation: 40psi. Flow Range: 20 GPM to 60 GPM. 120 mesh stainless steel screen. 1-1/2" inlet x single 2" outlet	4	
	Area to Receive Dripline Hunter HDL-06-18-PC HDL-06-18-PC: Hunter Dripline with 0.6 GPH flow. Light brown tubing with gray striping. Emitters at 18" O.C. Dripline laterals spaced at 18" apart, with emitters offset for triangular pattern. Install with Hunter PLD barbed or PLD-LOC fittings.	10,681 s.f.	
SYMBOL	MANUFACTURER/MODEL/DESCRIPTION		
	Hunter PGV-151 Globe 1-1/2" Plastic Electric Remote Control Valve, for Residential/Light Commercial Use. Female NPT Inlet/Outlet, With Flow Control. Globe Configuration.		
	Landscape Products Inc. BBV 1/2", 3/4", 1", 1-1/4", 1-1/2", 2", 2-1/2", 3" Full Port Brass Ball Valve. Suitable for a full range of liquids and gases in residential and commercial applications.		
MV	Hunter ICV-G-BSP-FS 2" 1", 1-1/2", 2", and 3" Plastic Electric Master Valve, Globe Configuration, with BSP Threaded Inlet/Outlet, for Commercial/Municipal Use. With Filter Sentry.		
MV2	Hunter ICV-G-BSP-FS 2" 1", 1-1/2", 2", and 3" Plastic Electric Master Valve, Globe Configuration, with BSP Threaded Inlet/Outlet, for Commercial/Municipal Use. With Filter Sentry.		
MV3	Hunter ICV-G-BSP-FS 2" 1", 1-1/2", 2", and 3" Plastic Electric Master Valve, Globe Configuration, with BSP Threaded Inlet/Outlet, for Commercial/Municipal Use. With Filter Sentry.		
BF1	Febco 825Y 2" Reduced Pressure Backflow Preventer		
BF2	Febco 825Y 2" Reduced Pressure Backflow Preventer		
BF3	Febco 825Y 2" Reduced Pressure Backflow Preventer		
C2	Hunter I2C-0800-PP 8 Station Outdoor Modular Controller. No Module Required. Commercial Use. Plastic Pedestal.		
C3	Hunter I2C-0800-PP 8 Station Outdoor Modular Controller. No Module Required. Commercial Use. Plastic Pedestal.		
C1	Hunter I2C-1600-PP 16 Station Outdoor Modular Controller. With one ICM-800 Module. Commercial Use. Plastic Pedestal.		
WSS1	Hunter WSS Wireless Solar, rain freeze sensor with outdoor interface, connects to Hunter PCC, Pro-C, and I-Core Controllers, install as noted. Includes 10 year lithium battery and rubber module cover, and gutter mount bracket.		
WSS2	Hunter WSS Wireless Solar, rain freeze sensor with outdoor interface, connects to Hunter PCC, Pro-C, and I-Core Controllers, install as noted. Includes 10 year lithium battery and rubber module cover, and gutter mount bracket.		
WSS3	Hunter WSS Wireless Solar, rain freeze sensor with outdoor interface, connects to Hunter PCC, Pro-C, and I-Core Controllers, install as noted. Includes 10 year lithium battery and rubber module cover, and gutter mount bracket.		
F	Landscape Products Inc. 5720-WYE 2" bronze Y filter. 20 SS mesh, sediment and debris protection. For commercial and residential landscape irrigation systems, swimming pools and various plumbing applications. Max operating pressure 400 psi.		
M1	Water Meter 2"		
M2	Water Meter 2"		
M3	Water Meter 2"		
	Irrigation Lateral Line: PVC Schedule 40		
	Irrigation Mainline: PVC Schedule 40		
	Pipe Sleeve: PVC Schedule 40		

Valve Callout

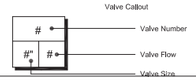

VALVE SCHEDULE

NUMBER	MODEL	SIZE	TYPE	GPM	FRICTION LOSS	VALVE LOSS	PSI	PSI @ POC	PRECIP
1	Hunter ICZ-151-XL-40	1-1/2"	Area for Dripline	11.49	4.93	11	45.9		0.43 in/h
2	Hunter PGV-151 Globe	1-1/2"	Bubbler	7.6	5.58	3	38.6		4.01 in/h
3	Hunter PGV-151 Globe	1-1/2"	Turf Rotary	18.8	4.54	3	37.5		0.81 in/h
4	Hunter PGV-151 Globe	1-1/2"	Bubbler	10.64	5.42	3	38.4		3.69 in/h
5	Hunter PGV-151 Globe	1-1/2"	Turf Rotary	19.04	3.95	3	37.0		0.79 in/h
6	Hunter PGV-151 Globe	1-1/2"	Bubbler	12.92	5.88	3	38.9		4.18 in/h
7	Hunter ICZ-151-XL-40	1-1/2"	Area for Dripline	7.35	4.54	11	45.5		0.43 in/h
8	Hunter PGV-151 Globe	1-1/2"	Bubbler	12.16	4.89	3	37.9		4.18 in/h
9	Hunter PGV-151 Globe	1-1/2"	Turf Rotary	5.56	4.21	3	37.2		0.42 in/h
10	Hunter ICZ-151-XL-40	1-1/2"	Area for Dripline	10.19	5.06	11	46.1		0.43 in/h
11	Hunter PGV-151 Globe	1-1/2"	Turf Rotary	21.93	5.81	3	38.8		0.6 in/h
12	Hunter PGV-151 Globe	1-1/2"	Bubbler	8.36	3.11	3	36.1		4.18 in/h
13	Hunter PGV-151 Globe	1-1/2"	Bubbler	18.24	19.9	3	52.9	67.5	4.18 in/h
14	Hunter PGV-151 Globe	1-1/2"	Bubbler	9.5	2.33	3	35.3	48.5	4.16 in/h
15	Hunter PGV-151 Globe	1-1/2"	Bubbler	15.58	5.3	3	38.3	52.4	4.16 in/h
16	Hunter ICZ-151-XL-40	1-1/2"	Area for Dripline	18.44	5.94	11	46.9		0.43 in/h
17	Hunter PGV-151 Globe	1-1/2"	Turf Rotary	15.79	5.76	3	38.8		0.4 in/h
18	Hunter PGV-151 Globe	1-1/2"	Bubbler	4.56	0.38	3	33.4	45.9	3.85 in/h
19	Hunter PGV-151 Globe	1-1/2"	Turf Rotary	21.99	5.76	3	38.8		0.78 in/h

WYOMING SPRINGS
SEGMENT 1
ROUND ROCK, TX

ROUND ROCK TEXAS

halff
13620 Briarwick Drive
Suite 100
Austin, Texas 78729-1102
TEL (512) 777-4600
FAX (512) 252-8141

Revision No.	Date	Description

STATE OF TEXAS
TOBIN L. FOX
00:4051
LICENSED LANDSCAPE ARCHITECT
04/05/2023

100% SUBMITTAL

Project No.:	36179
Issued:	2023/04/05
Drawn By:	WC
Checked By:	TF
Scale:	

Sheet Title
IRRIGATION DATA AND SCHEDULES

486
Sheet Number

EXISTING & PROPOSED SYMBOLS
SHEET NUMBER
SHEET NUMBER
SHEET NUMBER
SHEET NUMBER

DISCLAIMER:
The use of this standard is governed by the "Texas Engineering Practice Act". No warranty of any kind is made by TxDOT for any purpose whatsoever. TxDOT assumes no responsibility for the conversion of this standard to other formats or for incorrect results or damages resulting from its use.

DATE: 4/14/2023 3:28:16 PM
FILE: W:\AUS\3600\3609\002\CAD\Sheets\AUS3609002_ENVIRMTN.dgn

I. STORMWATER POLLUTION PREVENTION-CLEAN WATER ACT SECTION 402

TPDES TXR 150000: Stormwater Discharge Permit or Construction General Permit required for projects with 1 or more acres distrubed soil. Projects with any disturbed soil must protect for erosion and sedimentation in accordance with Item 1122.

List MS4 Operator(s) that may receive discharges from this project. They may need to be notified prior to construction activities.

1.

2.

☐ No Action Required ☒ Required Action

Action No.

1. Prevent stormwater pollution by controlling erosion and sedimentation in accordance with TPDES Permit TXR 150000
2. Comply with the SW3P and revise when necessary to control pollution or required by the Engineer.
3. Post Construction Site Notice (CSN) with SW3P information on or near the site, accessible to the public and TCEQ, EPA or other inspectors.
4. When Contractor project specific locations (PSL's) increase disturbed soil area to 5 acres or more, submit NOI to TCEQ and the Engineer.

II. WORK IN OR NEAR STREAMS, WATERBODIES AND WETLANDS CLEAN WATER ACT SECTIONS 401 AND 404

USACE Permit required for filling, dredging, excavating or other work in any water bodies, rivers, creeks, streams, wetlands or wet areas.

The Contractor must adhere to all of the terms and conditions associated with the following permit(s):

☐ No Permit Required
☒ Nationwide Permit 14 - PCN not Required (less than 1/10th acre waters or wetlands affected)
☐ Nationwide Permit 14 - PCN Required (1/10 to <1/2 acre, 1/3 in tidal waters)
☐ Individual 404 Permit Required
☐ Other Nationwide Permit Required: NWP# _____

Required Actions: List waters of the US permit applies to, location in project and check Best Management Practices planned to control erosion, sedimentation and post-project TSS.

1.

2.

3.

4.

The elevation of the ordinary high water marks of any areas requiring work to be performed in the waters of the US requiring the use of a nationwide permit can be found on the Bridge Layouts.

Best Management Practices:

Erosion	Sedimentation	Post-Construction TSS
☒ Temporary Vegetation	☒ Silt Fence	☐ Vegetative Filter Strips
☒ Blankets/Matting	☒ Rock Berm	☐ Retention/Irrigation Systems
☐ Mulch	☐ Triangular Filter Dike	☐ Extended Detention Basin
☒ Sodding	☐ Sand Bag Berm	☐ Constructed Wetlands
☐ Interceptor Swale	☐ Straw Bale Dike	☐ Wet Basin
☐ Diversion Dike	☐ Brush Berms	☐ Erosion Control Compost
☐ Erosion Control Compost	☐ Erosion Control Compost	☐ Mulch Filter Berm and Socks
☐ Mulch Filter Berm and Socks	☐ Mulch Filter Berm and Socks	☐ Compost Filter Berm and Socks
☐ Compost Filter Berm and Socks	☐ Compost Filter Berm and Socks	☐ Vegetation Lined Ditches
	☐ Stone Outlet Sediment Traps	☐ Sand Filter Systems
	☐ Sediment Basins	☒ StormTrooper System

III. CULTURAL RESOURCES

Refer to TxDOT Standard Specifications in the event historical issues or archeological artifacts are found during construction. Upon discovery of archeological artifacts (bones, burnt rock, flint, pottery, etc.) cease work in the immediate area and contact the Engineer immediately.

☐ No Action Required ☐ Required Action

Action No.

1.

2.

3.

4.

IV. VEGETATION RESOURCES

Preserve native vegetation to the extent practical.
Contractor must adhere to Construction Specification Requirements Specs 162, 164, 192, 193, 506, 730, 751, 752 in order to comply with requirements for invasive species, beneficial landscaping, and tree/brush removal commitments.

☐ No Action Required ☒ Required Action

Action No.

1. Establish vegetation in all disturbed areas as detailed in the erosion control plan.
2. Adhere to tree protection/tree removal plan.
3.
4.

V. FEDERAL LISTED, PROPOSED THREATENED, ENDANGERED SPECIES, CRITICAL HABITAT, STATE LISTED SPECIES, CANDIDATE SPECIES AND MIGRATORY BIRDS.

☐ No Action Required ☒ Required Action

Action No.

The contractor's attention is directed to the fact that there is the possibility that migratory birds may be nesting within the project limits. Contractor responsibilities include:

1. Not disturbing (ie. woody vegetation removal), destroying, or removing active nests, including ground nesting birds, during the nesting season (February 1 through August 31);
2. Avoid the removal of unoccupied, inactice nests, as practicable;
3. Preventing the establishment of active nests during the nesting season on City owned and operated facilities and structures proposed for replacement or repair; and
4. Not collecting, capturing, relocating, or transporting birds, eggs, young, or active nests without a permit.

All methods must be approved well in advance of planned use.

If any of the listed species are observed, cease work in the immediate area, do not disturb species or habitat and contact the Engineer immediately. The work may not remove active nests from bridges and other structures during nesting season of the birds associated with the nests. If caves or sinkholes are discovered, cease work in the immediate area, and contact the Engineer immediately.

LIST OF ABBREVIATIONS

BMP:	Best Management Practice	SPCC:	Spill Prevention Control and Countermeasure
CGP:	Construction General Permit	SW3P:	Storm Water Pollution Prevention Plan
DSHS:	Texas Department of State Health Services	PCN:	Pre-Construction Notification
FHWA:	Federal Highway Administration	PSL:	Project Specific Location
MOA:	Memorandum of Agreement	TCEQ:	Texas Commission on Environmental Quality
MOU:	Memorandum of Understanding	TPDES:	Texas Pollutant Discharge Elimination System
MS4:	Municipal Separate Stormwater Sewer System	TPWD:	Texas Parks and Wildlife Department
MBTA:	Migratory Bird Treaty Act	TxDOT:	Texas Department of Transportation
NOT:	Notice of Termination	T&E:	Threatened and Endangered Species
NWP:	Nationwide Permit	USACE:	U.S. Army Corp of Engineers
NOI:	Notice of Intent	USFWS:	U.S. Fish and Wildlife Service

VI. HAZARDOUS MATERIALS OR CONTAMINATION ISSUES

General (applies to all projects):

Comply with the Hazard Communication Act (the Act) for personnel who will be working with hazardous materials by conducting safety meetings prior to beginning construction and making workers aware of potential hazards in the workplace. Ensure that all workers are provided with personal protective equipment appropiate for any hazardous materials used.

Obtain and keep on-site Material Safety Data Sheets (MSDS) for all hazardous products used on the project, which may include, but are not limited to the following categories: Paints, acids, solvents, asphalt products, chemical additives, fuels and concrete curing compounds or additives. Provide protected storage, off bare ground and covered, for products which may be hazardous. Maintain product labelling as required by the Act.

Maintain an adequate supply of on-site spill response materials, as indicated in the MSDS. In the event of a spill, take actions to mitigate the spill as indicated in the MSDS, in accordance with safe work practices, and contact the District Spill Coordinator immediately. The Contractor shall be responsible for the proper containment and cleanup of all product spills.

Contact the Engineer if any of the follwing are detected:

- Dead or distressed vegetation (not identified as normal)
- Trash piles, drums, canister, barrels, etc.
- Undesirable smells or odors
- Evidence of leaching or seepage of substances

Does the project involve any bridge class structure rehabilitation or replacements (bridge class structures not including box culverts)?

☐ Yes ☒ No

If "No", then no further action is required.
If "Yes", then TxDOT is responsible for completing asbestos assessment/inspection.

Are the results of the asbestos inspection positive (is asbestos present)?

☐ Yes ☐ No

If "Yes", then TxDOT must retain a DSHS licensed asbestos consultant to assist with the notification, develop abatement/mitigation procedures, and perform management activities as necessary. The notification form to DSHS must be postmarked at least 15 working days prior to scheduled demolition.

If "No", then TxDOT is still required to notifiy DSHS 15 working days prior to any scheduled demolition.

In either case, the Contractor is responsible for providing the date(s) for abatement activities and/or demolition with careful coordination between the Engineer and asbestos consultant in order to minimize construction delays and subsequent claims.

Any other evidence indicating possible hazardous materials or contamination discoverd on site. Hazardous Materials or Contamination Issues Specific to this Project:

☒ No Action Required ☐ Required Action

Action No.

1.

2.

3.

VII. OTHER ENVIRONMENTAL ISSUES

(includes regional issues such as Edwards Aquifer District, etc.)

☐ No Action Required ☒ Required Action

Action No.

1. Comply with the requirements of the approved Water Pollution Abatement Plan (WPAP).
2. Comply with "TCEQ Requirements for the Recharge Zone of the Edwards Aquifer" enumerated on the following plan sheets.
3. Storm water quality units will be installed to reduce the increase in total suspended solids by 80%.

Texas Department of Transportation
Design Division Standard

ENVIRONMENTAL PERMITS, ISSUES AND COMMITMENTS

EPIC

FILE: epic.dgn	DN: TxDOT	CK: AM	DW: VP	CK: AR	
©TxDOT January 2012	CONT	SECT	JOB	HIGHWAY	
REVISIONS	0683	01	090		
12-12-2011 (DS)	DIST	COUNTY		SHEET NO.	
	AUS	WILLIAMSON			

SITE DESCRIPTION

PROJECT LIMITS: WYOMING SPRINGS FROM BRIGHTWATER BLVD/CREEK BEND BLVD TO SAM BASS RD, AND SAM BASS RD FROM 0.06 MI EAST OF TONKAWA TRAIL TO CROSSCREEK TRAIL.

PROJECT DESCRIPTION: CONSTRUCTION OF ROADWAY EXTENSION TO INCLUDE GRADING, HMAC PAVING, FLEX BASE, CURB & GUTTER, STORM SEWER, CULVERTS, RETAINING WALLS, WATER QUALITY FACILITIES, SIGNALIZATION, LIGHTING WATER AND WASTER WATER UTILITY ADJUSTMENTS, AND BRIDGE CONSTRUCTION

MAJOR SOIL DISTURBING ACTIVITIES: MAJOR SOIL DISTURBING ACTIVITIES INCLUDE PAVEMENT REMOVAL, STRUCTURAL REMOVAL, EXCAVATION, CONSTRUCTION OF DRAINAGE STRUCTURES, AND DRILLED PIERS FOR BRIDGE INSTALLATION.

TOTAL PROJECT AREA: 31.6 ACRES

TOTAL AREA TO BE DISTURBED: 30.9 ACRES

WEIGHTED RUNOFF COEFFICIENT (AFTER CONSTRUCTION): 0.67

EXISTING CONDITION OF SOIL & VEGETATIVE COVER AND % OF EXISTING VEGETATIVE COVER: THE EXISTING SOIL IS IN GOOD CONDITION AND IS COVERED WITH APPROXIMATELY 65% VEGETATIVE COVER BY VISUAL INSPECTION.

NAME OF RECEIVING WATERS: RUNOFF FLOWS TO BRUSHY CREEK (SEGMENT 1244) TO THE SAN GABRIEL RIVER (1214) TO THE LITTLE RIVER (1213) TO THE BRAZOS RIVER (1242).

EROSION AND SEDIMENT CONTROLS

SOIL STABILIZATION PRACTICES:

- [X] TEMPORARY SEEDING
- [X] PERMANENT PLANTING, SODDING, OR SEEDING
- [ ] MULCHING
- [ ] SOIL RETENTION BLANKET
- [ ] BUFFER ZONES
- [ ] PRESERVATION OF NATURAL RESOURCES

OTHER:

STRUCTURAL PRACTICES:

- [X] SILT FENCES
- [ ] HAY BALES
- [X] ROCK FILTER DAMS
- [ ] DIVERSION, INTERCEPTOR, OR PERIMETER DIKES
- [ ] DIVERSION, INTERCEPTOR, OR PERIMETER SWALES
- [ ] DIVERSION DIKE AND SWALE COMBINATIONS
- [ ] PIPE SLOPE DRAINS
- [ ] PAVED FLUMES
- [X] ROCK BEDDING AT CONSTRUCTION EXIT
- [ ] TIMBER MATTING AT CONSTRUCTION EXIT
- [ ] CHANNEL LINERS
- [ ] SEDIMENT TRAPS
- [ ] SEDIMENT BASINS
- [ ] STORM INLET SEDIMENT TRAP
- [ ] STONE OUTLET STRUCTURES
- [X] CURBS AND GUTTERS
- [X] STORM SEWERS
- [X] VELOCITY CONTROL DEVICES

OTHER:

NARRATIVE - SEQUENCE OF CONSTRUCTION (STORM WATER MANAGEMENT) ACTIVITIES: ROCK FILTER BERMS AND SILT FENCE WILL BE PLACED AT LOCATIONS SHOWN ON THE PLANS PRIOR TO SOIL DISTURBING ACTIVITIES IN THE VICINITY. UPON THE COMPLETION OF SOIL DISTURBING ACTIVITIES, DISTURBED AREAS WILL EITHER BE SODDED OR SEEDED AND COVERED WITH A SOIL RETENTION BLANKET. ROCK FILTER BERMS AND SILT FENCE WILL BE REMOVED UPON ESTABLISHMENT OF PERMANENT VEGETATION. UTILIZE CITY OR ROUND ROCK EROSION CONTROL DETAILS REFERENCED IN THIS PLAN.

STORM WATER MANAGEMENT: STORM WATER WILL BE CARRIED BY STORM SEWER SYSTEMS THAT OUTFALL TO DITCHES OR CHANNELS WITH SIDE SLOPES GENERALLY CONSISTING OF SIDE SLOPES OF 3:1 OR FLATTER WITH PERMANENT VEGETATIVE COVER. CONCRETE RIPRAP WILL BE USED IN LOCATIONS WITH STEEP SLOPES AND HIGH VELOCITIES TO PREVENT EROSION.

OTHER EROSION AND SEDIMENT CONTROLS:

MAINTENANCE: MAINTAIN ALL EROSION AND SEDIMENT CONTROLS IN GOOD WORKING ORDER. PERFORM ANY NECESSARY REPAIRS AT THE EARLIEST DATE POSSIBLE BUT NO LATER THAN 7 CALENDAR DAYS AFTER THE SURROUNDING EXPOSED GROUND HAS DRIED SUFFICIENTLY TO PREVENT FURTHER DAMAGE FROM HEAVY EQUIPMENT. STABILIZE DISTURBED AREAS ON WHICH CONSTRUCTION ACTIVITIES HAVE CEASED, TEMPORARILY OR PERMANENTLY, WITHIN 14 CALENDAR DAYS UNLESS THEY ARE SCHEDULED TO AND DO RESUME WITHIN 21 CALENDAR DAYS. THE AREAS ADJACENT TO CREEKS AND DRAINAGEWAYS HAVE PRIORITY.

INSPECTION: AN INSPECTOR WILL PERFORM A REGULARLY SCHEDULED SW3P INSPECTION EVERY 7 CALENDAR DAYS. AN INSPECTION AND MAINTENANCE REPORT, SIGNED BY THE CORR INSPECTOR AND THE CONTRACTOR, WILL BE FILED FOR EACH INSPECTION. REVISE AND/OR REPAIR EACH BMP CONTROL DEVICE IN ACCORDANCE WITH THE CURRENT INSPECTION AND MAINTENANCE REPORT AND ITEM 1:MAINTENANCE AS DETAILED ABOVE.

WASTE MATERIALS: ON A REGULAR BASIS OR AS DIRECTED, COLLECT ALL WASTE MATERIALS, TRASH, AND DEBRIS FROM THE CONSTRUCTION SITE AND DEPOSIT INTO A METAL DUMPSTER HAVING A SECURE COVER AND WHICH MEETS ALL STATE AND LOCAL SOLID WASTE MANAGEMENT REQUIREMENTS. EMPTY THE DUMPSTER AS REQUIRED BY REGULATION OR AS DIRECTED AT A LOCAL APPROVED LANDFILL SITE. DO NOT BURY CONSTRUCTION WASTE ON THE CONSTRUCTION PROJECT SITE.

HAZARDOUS WASTE (INCLUDING SPILL REPORTING): AS A MINIMUM, ANY PRODUCT IN THE FOLLOWING CATEGORIES ARE CONSIDERED TO BE HAZARDOUS: PAINTS, ACIDS, SOLVENTS, FUELS, ASPHALT PRODUCTS, CHEMICAL ADDITIVES FOR SOIL STABILIZATION, AND CONCRETE CURING COMPOUNDS OR ADDITIVES. WHEN STORING HAZARDOUS MATERIAL ON THE PROJECT SITE OR AT A PROJECT SPECIFIC LOCATION, TAKE ALL PRACTICAL PRECAUTION TO PREVENT AND/OR CONTAIN ANY SPILLAGE OF THESE MATERIAL. IN THE EVENT OF A MOTOR CARRIER SPILL THAT MAY BE HAZARDOUS, THE CITY INSPECTOR SHALL BE CONTACTED IMMEDIATELY TO CONVEY FURTHER DISPATCH. THE TCEQ SHALL ALSO BE NOTIFIED (512) 339-2929 IF DURING 8 AM. TO 5 PM. MON.- FRI. OTHERWISE THE 24 HR. HOTLINE 1-800-832-8224 WILL BE NOTIFIED FOR REPORTABLE QUANTITIES. FROM ANY EVENT, THE REPORTABLE QUANTITY (RQ) = FOR HIGHLY TOXIC MATERIALS THE RQ>25 GALS. FOR PETROLEUM/HYDROCARBON LIQUIDS, SPILLS THE RQ>250 GALLONS (ON LAND) OR THAT WHICH CREATES "A SHEEN" ON WATER. CORR MAY PROVIDE ASSISTANCE IN TRAFFIC CONTROL, CONTAINMENT AND LATER REPAIRS, BUT ONLY CERTIFIED HAZMAT TEAMS WILL BE RESPONSIBLE FOR HANDLING THE MATERIAL AT THE SITE. ADDITIONALLY IN THE EVENT OF A HAZARDOUS MATERIAL SPILL, LOCAL WILLIAMSON COUNTY AND/OR CITY OF ROUND ROCK POLICE, FIRE AND POTENTIALLY EMS SHOULD BE CONTACTED IN ORDER TO INITIATE THE HAZARDOUS MATERIAL RESPONSE TEAM.

SANITARY WASTE: USE A LICENSED SANITARY WASTE MANAGEMENT COORDINATOR TO COLLECT ALL SANITARY WASTE FROM PORTABLE UNITS AS REQUIRED BY LOCAL REGULATION OR AS DIRECTED.

OFFSITE VEHICLE TRACKING:

- [X] HAUL ROADS DAMPENED FOR DUST CONTROL
- [X] LOADED HAUL TRUCKS TO BE COVERED WITH TARPAULIN
- [X] EXCESS DIRT ON ROAD REMOVED DAILY
- [X] STABILIZED CONSTRUCTION ENTRANCE

OTHER:

REMARKS: CONSTRUCT DISPOSAL AREAS, STOCKPILES, AND HAUL ROADS IN A MANNER THAT WILL MINIMIZE AND CONTROL THE AMOUNT OF SEDIMENT THAT MAY ENTER RECEIVING WATERS. DO NOT LOCATE DISPOSAL AREAS IN ANY WETLAND, WATER BODY, OR STREAMBED. LOCATE CONSTRUCTION STAGING AREAS AND VEHICLE MAINTENANCE AREAS IN A MANNER TO MINIMIZE THE RUNOFF OF POLLUTANTS. WHEN WORKING IN OR NEAR A WETLAND, INSTALL AND MAINTAIN OPERATING SOIL EROSION AND SEDIMENT CONTROLS AT ALL TIMES DURING CONSTRUCTION AND ISOLATE THE WORK FROM THE WETLANDS. AS SOON AS PRACTICAL, CLEAR ALL WATER WAYS OF ANY MATERIALS THAT ARE NOT A PART OF THE FINISHED WORK.

CORR STORM WATER POLLUTION PREVENTION PLAN (SW3P)

SHEET: 1 OF 1

FED.RD. DIV.NO.	PROJECT NO.		SHEET NO.
6			486
STATE	DIST.	COUNTY	
TEXAS	AUS	WILLIAMSON	
CONT.	SECT.	JOB	HIGHWAY NO.
0683	01	090	

The following TCEQ requirements (Form TCEQ-0592, Rev. 7/15/15) are applicable to all work in the recharge zone of the Edwards Aquifer in Hays, Travis and/or Williamson Counties and must be adhered to by the Contractor and all Subcontractors:

1. A written notice of construction must be submitted to the TCEQ regional office at least 48 hours prior to the start of any regulated activities. This notice must include:
   - the name of the approved project;
   - the activity start date; and
   - the contact information of the prime contractor.

2. All contractors conducting regulated activities associated with this project must be provided with complete copies of the approved Water Pollution Abatement Plan (WPAP) and the TCEQ letter indicating the specific conditions of its approval. During the course of these regulated activities, the contractors are required to keep on-site copies of the approved plan and approval letter.

3. If any sensitive feature(s) (caves, solution cavity, sink hole, etc.) is discovered during construction, all regulated activities near the sensitive feature must be suspended immediately. The appropriate TCEQ regional office must be immediately notified of any sensitive features encountered during construction. Construction activities may not be resumed until the TCEQ has reviewed and approved the appropriate protective measures in order to protect any sensitive feature and the Edwards Aquifer from potentially adverse impacts to water quality.

4. No temporary or permanent hazardous substance storage tank shall be installed within 150 feet of a water supply source, distribution system, well, or sensitive feature.

5. Prior to beginning any construction activity, all temporary erosion and sedimentation (E&S) control measures must be properly installed and maintained in accordance with the approved plans and manufacturers specifications. If inspections indicate a control has been used inappropriately, or incorrectly, the applicant must replace or modify the control for site situations. These controls must remain in place until the disturbed areas have been permanently stabilized.

6. Any sediment that escapes the construction site must be collected and properly disposed of before the next rain event to ensure it is not washed into surface streams, sensitive features, etc.

7. Sediment must be removed from the sediment traps or sedimentation basins not later thanwhen it occupies 50% of the basin's design capacity.

8. Litter, construction debris, and construction chemicals exposed to stormwater shall be prevented from being discharged offsite.

9. All spoils (excavated material) generated from the project site must be stored on-site with proper E&S controls. For storage or disposal of spoils at another site on the Edwards Aquifer Recharge Zone, the owner of the site must receive approval of a water pollution abatement plan for the placement of fill material or mass grading prior to the placement of spoils at the other site.

10. If portions of the site will have a temporary or permanent cease in construction activity lasting longer than 14 days, soil stabilization in those areas shall be initiated as soon as possible prior to the 14th day of inactivity. If activity will resume prior to the 21st day, stabilization measures are not required. If drought conditions or inclement weather prevent action by the 14th day, stabilization measures shall be initiated as soon as possible.

11. The following records shall be maintained and made available to the TCEQ upon request:
    - the dates when major grading activities occur;
    - the dates when construction activities temporarily or permanently cease on a portion of the site; and
    - the dates when stabilization measures are initiated.

12. The holder of any approved Edward Aquifer protection plan must notify the appropriate regional office in writing and obtain approval from the executive director prior to initiating any of the following:

    A. any physical or operational modification of any water pollution abatement structure(s), including but not limited to ponds, dams, berms, sewage treatment plants, and diversionary structures;
    B. any change in the nature or character of the regulated activity from that which was originally approved or a change which would significantly impact the ability of the plan to prevent pollution of the Edwards Aquifer;
    C. any development of land previously identified as undeveloped in the original water pollution abatement plan.

TCEQ REGIONAL OFFICE

Austin Regional Office
12100 Park 35 Circle
Bldg A, Room 179
Austin, Texas 78753
Phone: (512) 339-2929
Fax: (512) 339-3795

Texas Department of Transportation | Austin District Standard

TCEQ REQUIREMENTS FOR THE RECHARGE ZONE OF THE EDWARDS AQUIFER

TCEQ-RZ-19(AUS)

©TxDOT 2020

CONT	SECT	JOB	HIGHWAY

REVISIONS
01/10/14: REQUIREMENTS AND ADDRESS UPDATED
01/21/16: REQUIREMENTS UPDATED
09/24/19: UPDATED RELEASE YEAR

DIST	COUNTY	SHEET NO.

DATE: 9/21/2020 12:55:18 PM
FILE: pw:\\txdot.projectwiseonline.com:TXDOT4\Documents\14 - AUS_Standards\District Design Standards\Approved\TCEQ-RZ-19(AUS).dgn

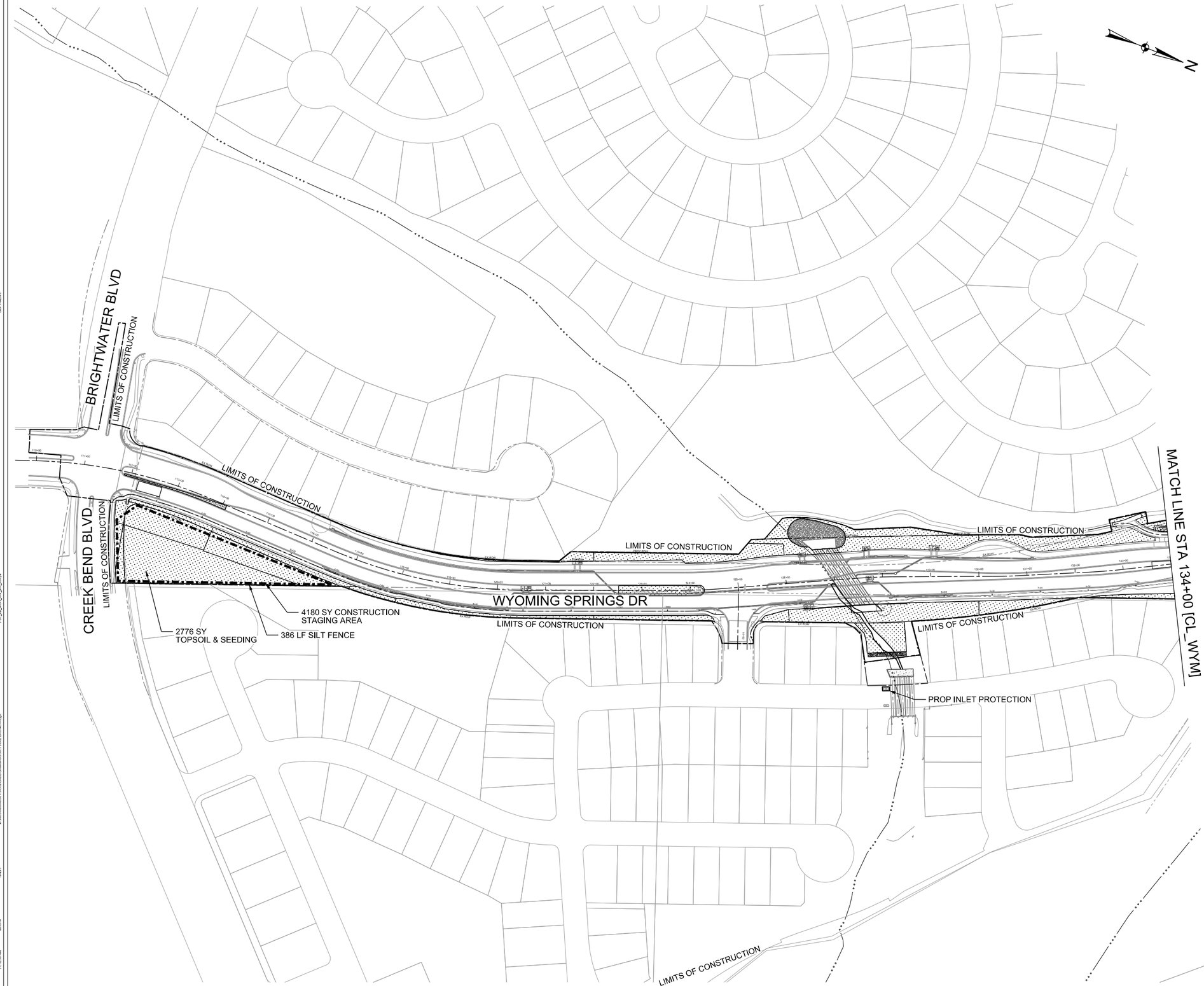

0 100 200 300 400

SCALE: 1"=200'

LEGEND

- SF – SILT FENCE
- CONSTRUCTION PERIMETER FENCE W/ DUST SCREEN
- RETAINING WALL
- EXISTING FEATURES
- PROPOSED ROW
- EXISTING ROW
- EASEMENT
- EXISTING CONTOURS
- LIMITS OF CONSTRUCTION
- SEEDING
- ROCK BERM
- TREE TO REMAIN
- TREE TO BE PROTECTED
- TREE TO BE REMOVED
- FLOW ARROWS
- INLET PROTECTION (I.P.)
- CONSTRUCTION STAGING AREA

NOTES:

1. REFERENCE LANDSCAPE PLAN FOR ADDITIONAL SOIL STABILIZATION.

WYOMING SPRINGS
SEGMENT 1
ROUND ROCK, TX

halff
13620 BRANTWICK DR
BLDG C, STE 100
AUSTIN, TX 78729
(512) 777-4600
TBPELS FIRM #312

Revision No.	Date	Description

F-312 4/17/23
STATE OF TEXAS
JEFFREY L. NAGY
133255
LICENSED
PROFESSIONAL ENGINEER

100% SUBMITTAL

Project No.:	36179.002
Issued:	4/17/2023
Drawn By:	SG
Checked By:	JN
Scale:	1"=200'

Sheet Title
OVERALL EROSION CONTROL PLAN (1 OF 2)

490
Sheet Number

0 100 200 300 400

SCALE: 1"=200'

N

LEGEND

- SF — SILT FENCE
- CONSTRUCTION PERIMETER FENCE W/ DUST SCREEN
- RETAINING WALL
- EXISTING FEATURES
- PROPOSED ROW
- EXISTING ROW
- EASEMENT
- EXISTING CONTOURS
- LIMITS OF CONSTRUCTION
- SEEDING
- ROCK BERM
- TREE TO REMAIN
- TREE TO BE PROTECTED
- TREE TO BE REMOVED
- FLOW ARROWS
- INLET PROTECTION (I.P.)
- CONSTRUCTION STAGING AREA

WYOMING SPRINGS DR

LIMITS OF CONSTRUCTION

830 SY TOPSOIL & SEEDING

363 LF SILT FENCE

172 SY TOPSOIL & SEEDING

609 SY TOPSOIL & SEEDING

95 LF SILT FENCE

168 LF SILT FENCE

6400 SY TOPSOIL & SEEDING

111 SY STABILIZED CONSTRUCTION ENTRANCE (50' X 20')

PROP CONCRETE WASHOUT (SUBSIDIARY TO CONC ITEMS)

5457 SY CONSTRUCTION STAGING AREA

139 SY TOPSOIL & SEEDING

305 SY TOPSOIL & SEEDING

622 SY TOPSOIL & SEEDING

766 SY TOPSOIL & SEEDING

193 LF SILT FENCE

WYOMING SPRINGS
SEGMENT 1
ROUND ROCK, TX

ROUND ROCK TEXAS

halff
13620 BRANTWICK DR
BLDG C, STE 100
AUSTIN, TX 78729
(512) 777-4600
TBPELS FIRM #312

Revision No.	Date	Description

F-312 8/14/23
STATE OF TEXAS
JEFFREY L NAGY
133255
LICENSED PROFESSIONAL ENGINEER

100% SUBMITTAL

Project No.:	36179.002
Issued:	8/24/2023
Drawn By:	SG
Checked By:	JN
Scale:	1"=200'

Sheet Title
OVERALL EROSION CONTROL PLAN (2 OF 2)

482
Sheet Number

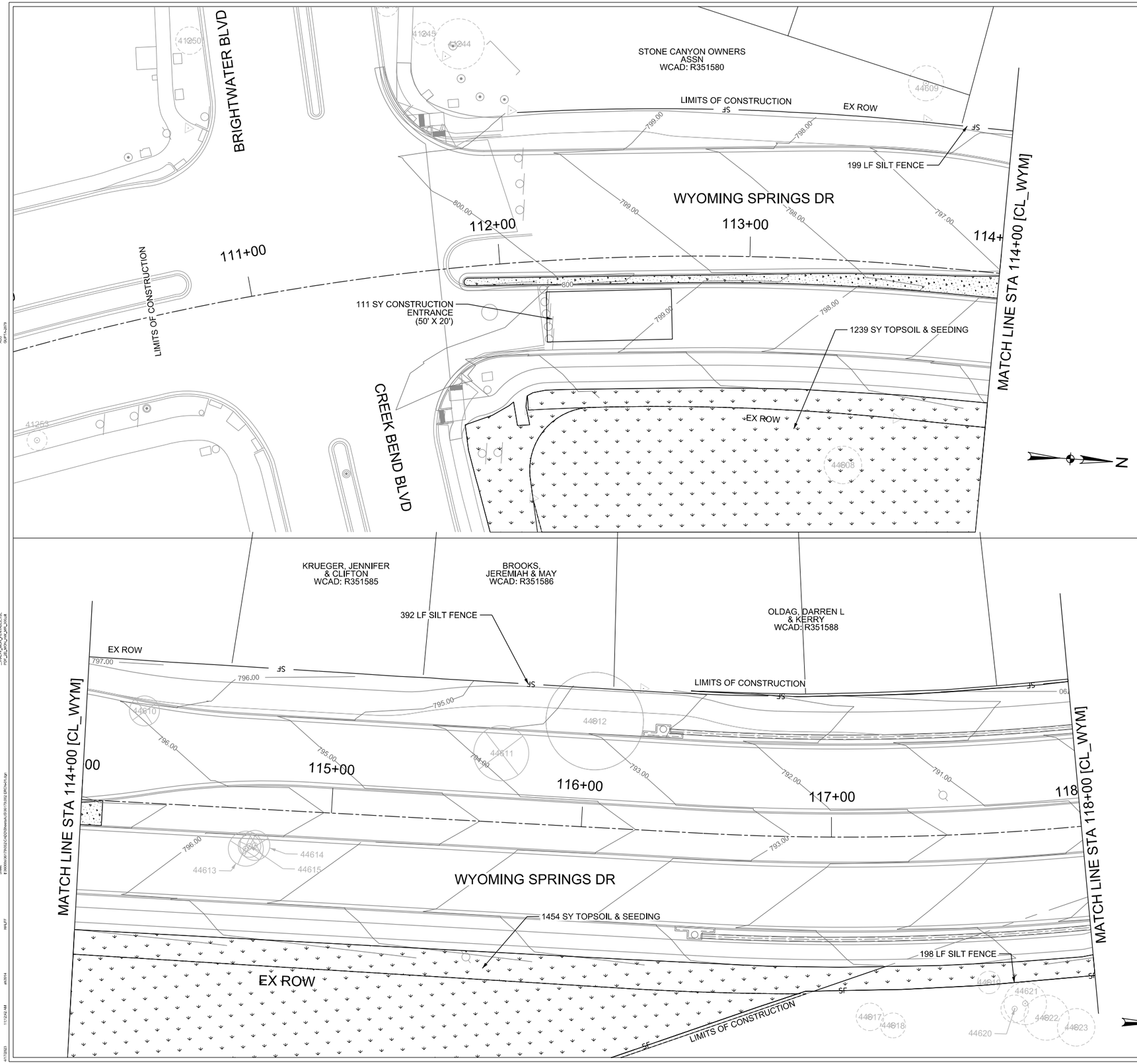

LEGEND

- SF — SILT FENCE
- CONSTRUCTION PERIMETER FENCE W/ DUST SCREEN
- RETAINING WALL
- EXISTING FEATURES
- PROPOSED ROW
- EXISTING ROW
- EASEMENT
- EXISTING CONTOURS
- LIMITS OF CONSTRUCTION
- SEEDING
- ROCK BERM
- TREE TO REMAIN
- TREE TO BE PROTECTED
- TREE TO BE REMOVED
- FLOW ARROWS
- INLET PROTECTION (I.P.)

0 20 40 60 80

SCALE: 1"=40'

NOTES:

1. REFERENCE LANDSCAPE PLAN FOR ADDITIONAL SOIL STABILIZATION.

WYOMING SPRINGS
SEGMENT 1
ROUND ROCK, TX

halff
13620 BRANTWICK DR
BLDG C, STE 100
AUSTIN, TX 78729
(512) 777-4600
TBPELS FIRM #312

Revision No.	Date	Description

F-312 4/5/23
STATE OF TEXAS
JEFFREY L. NAGY
133255
LICENSED PROFESSIONAL ENGINEER

100% SUBMITTAL

Project No.:	36179.002
Issued:	4/17/2023
Drawn By:	SG
Checked By:	JN
Scale:	1"=40'

Sheet Title
EROSION CONTROL
(1 OF 10)

492
Sheet Number

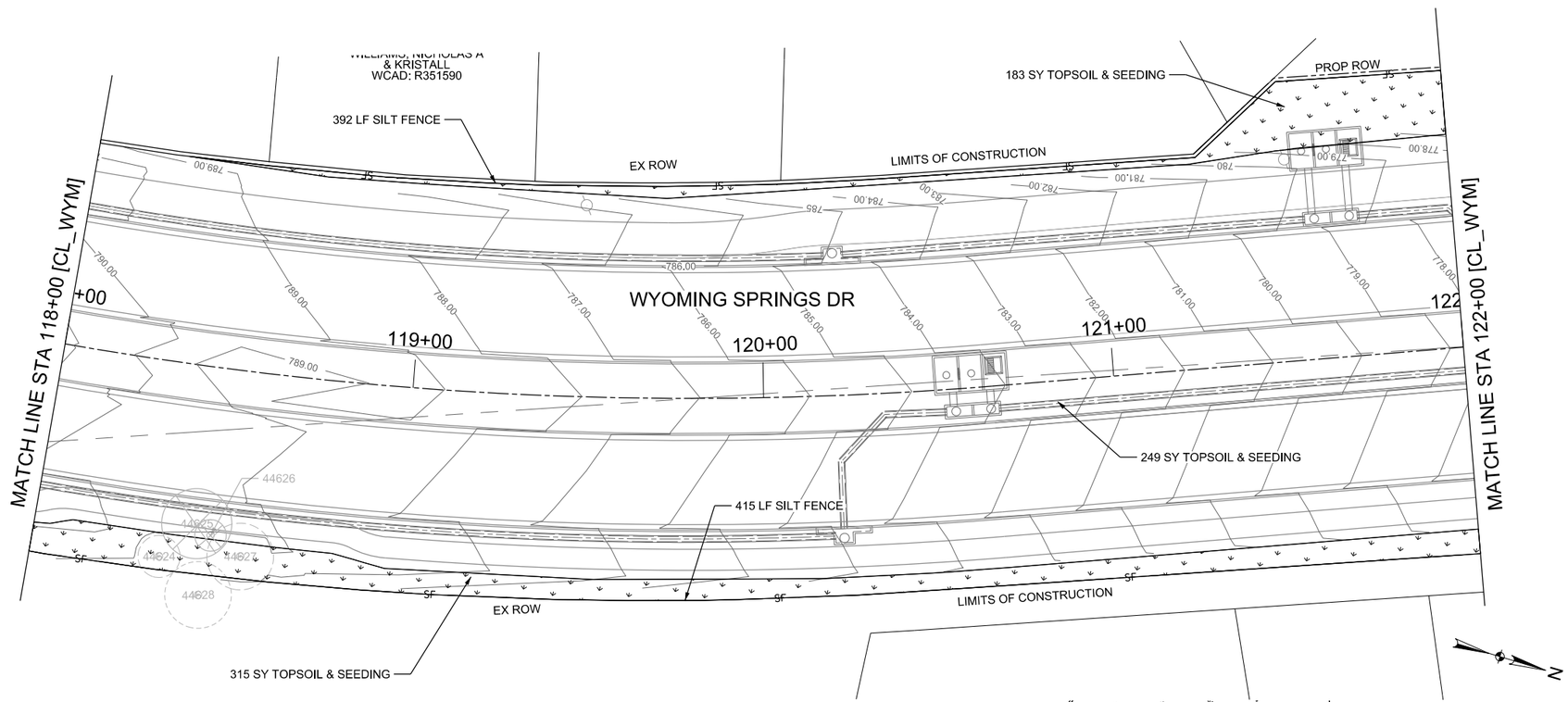

LEGEND

- SF — SILT FENCE
- CONSTRUCTION PERIMETER FENCE W/ DUST SCREEN
- RETAINING WALL
- EXISTING FEATURES
- PROPOSED ROW
- EXISTING ROW
- EASEMENT
- EXISTING CONTOURS
- LIMITS OF CONSTRUCTION
- SEEDING
- ROCK BERM
- TREE TO REMAIN
- TREE TO BE PROTECTED
- TREE TO BE REMOVED
- FLOW ARROWS
- INLET PROTECTION (I.P.)

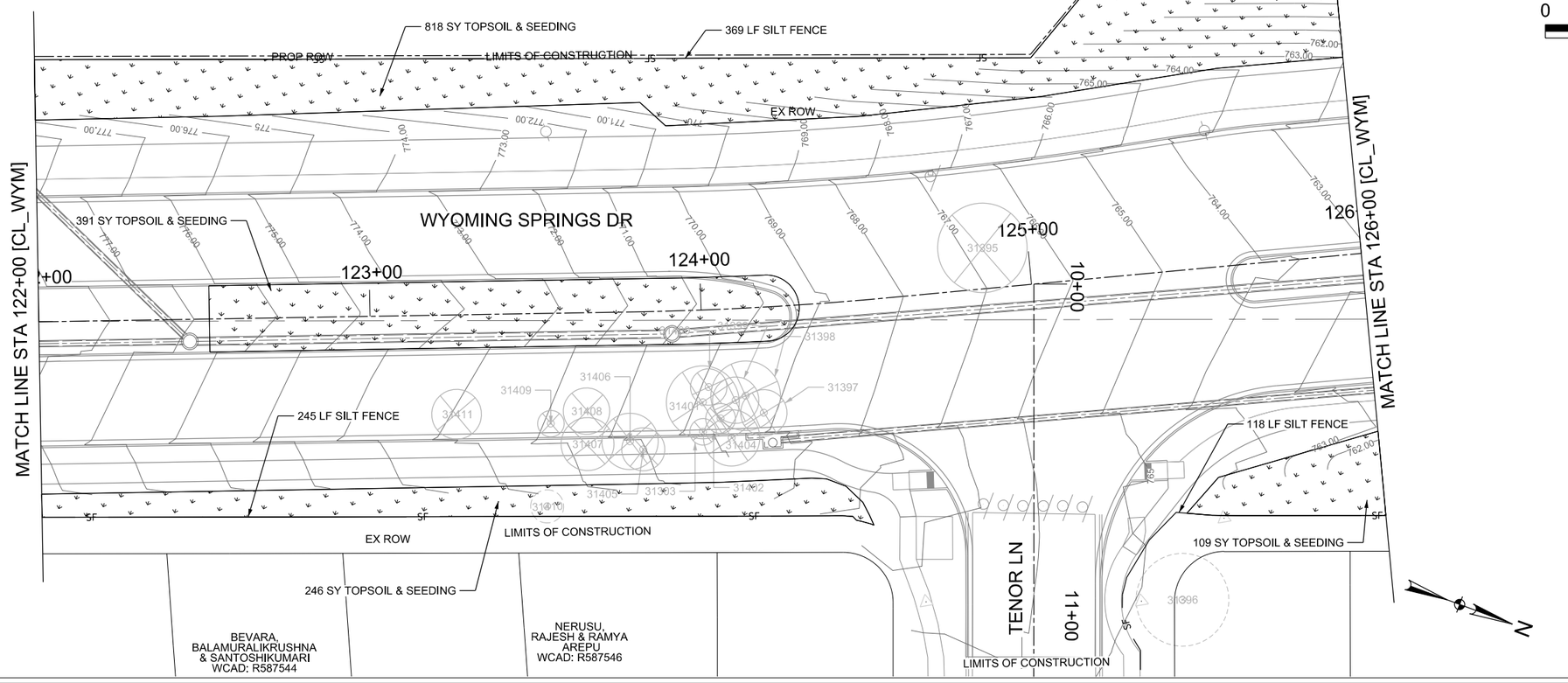

0 20 40 60 80

SCALE: 1"=40'

NOTES:

1. REFERENCE LANDSCAPE PLAN FOR ADDITIONAL SOIL STABILIZATION.

WYOMING SPRINGS
SEGMENT 1
ROUND ROCK, TX

halff
13620 BRANTWICK DR
BLDG C, STE 100
AUSTIN, TX 78729
(512) 777-4600
TBPELS FIRM #312

Revision No.	Date	Description

F-312 4/5/23
STATE OF TEXAS
JEFFREY L. NAGY
133255
LICENSED
PROFESSIONAL ENGINEER

100% SUBMITTAL

Project No.:	36179.002
Issued:	4/17/2023
Drawn By:	SG
Checked By:	JN
Scale:	1"=40'

Sheet Title
EROSION CONTROL
(2 OF 10)

493
Sheet Number

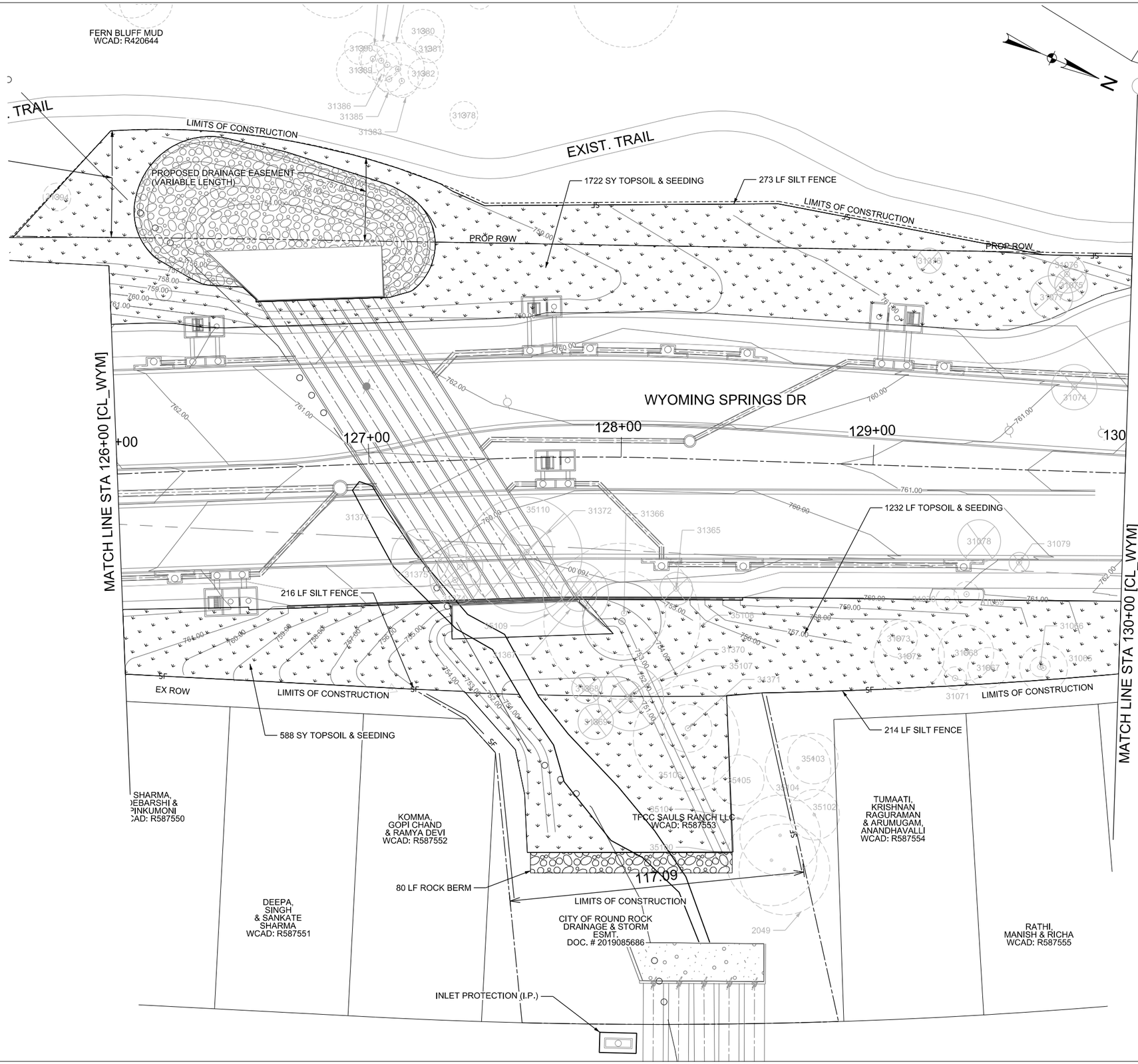

LEGEND

- SF — SILT FENCE
- CONSTRUCTION PERIMETER FENCE W/ DUST SCREEN
- RETAINING WALL
- EXISTING FEATURES
- PROPOSED ROW
- EXISTING ROW
- EASEMENT
- EXISTING CONTOURS
- LIMITS OF CONSTRUCTION
- SEEDING
- ROCK BERM
- TREE TO REMAIN
- TREE TO BE PROTECTED
- TREE TO BE REMOVED
- FLOW ARROWS
- INLET PROTECTION (I.P.)

NOTES:

1. REFERENCE LANDSCAPE PLAN FOR ADDITIONAL SOIL STABILIZATION.

WYOMING SPRINGS
SEGMENT 1
ROUND ROCK, TX

ROUND ROCK
TEXAS

halff
13620 BRANTWICK DR
BLDG C, STE 100
AUSTIN, TX 78729
(512) 777-4800
TBPELS FIRM #312

Revision No.	Date	Description

STATE OF TEXAS
JEFFREY L NAGY
133255
LICENSED
PROFESSIONAL ENGINEER
4/5/23

100% SUBMITTAL

Project No.:	36179.002
Issued:	4/17/2023
Drawn By:	SG
Checked By:	JN
Scale:	1"=40'

Sheet Title
EROSION CONTROL
(3 OF 10)

494
Sheet Number

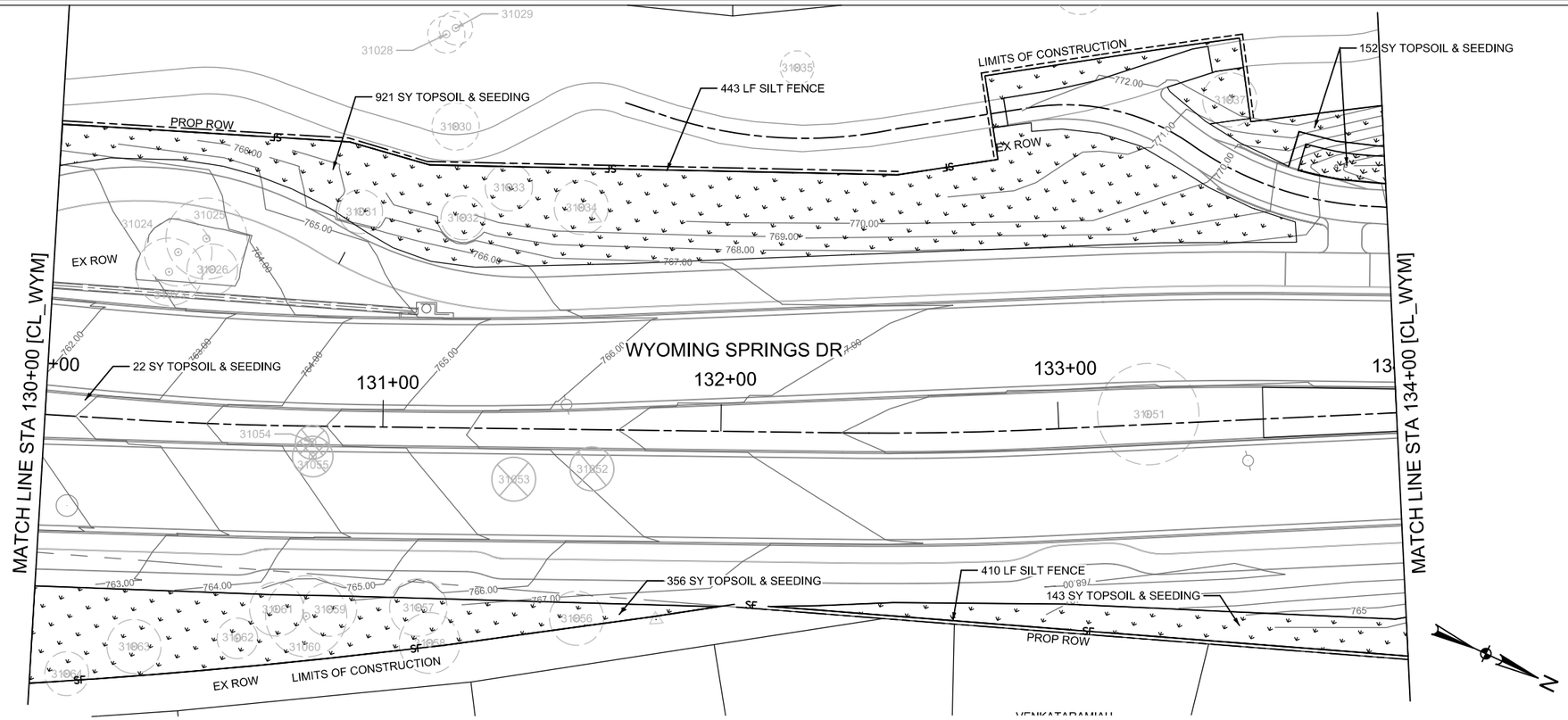

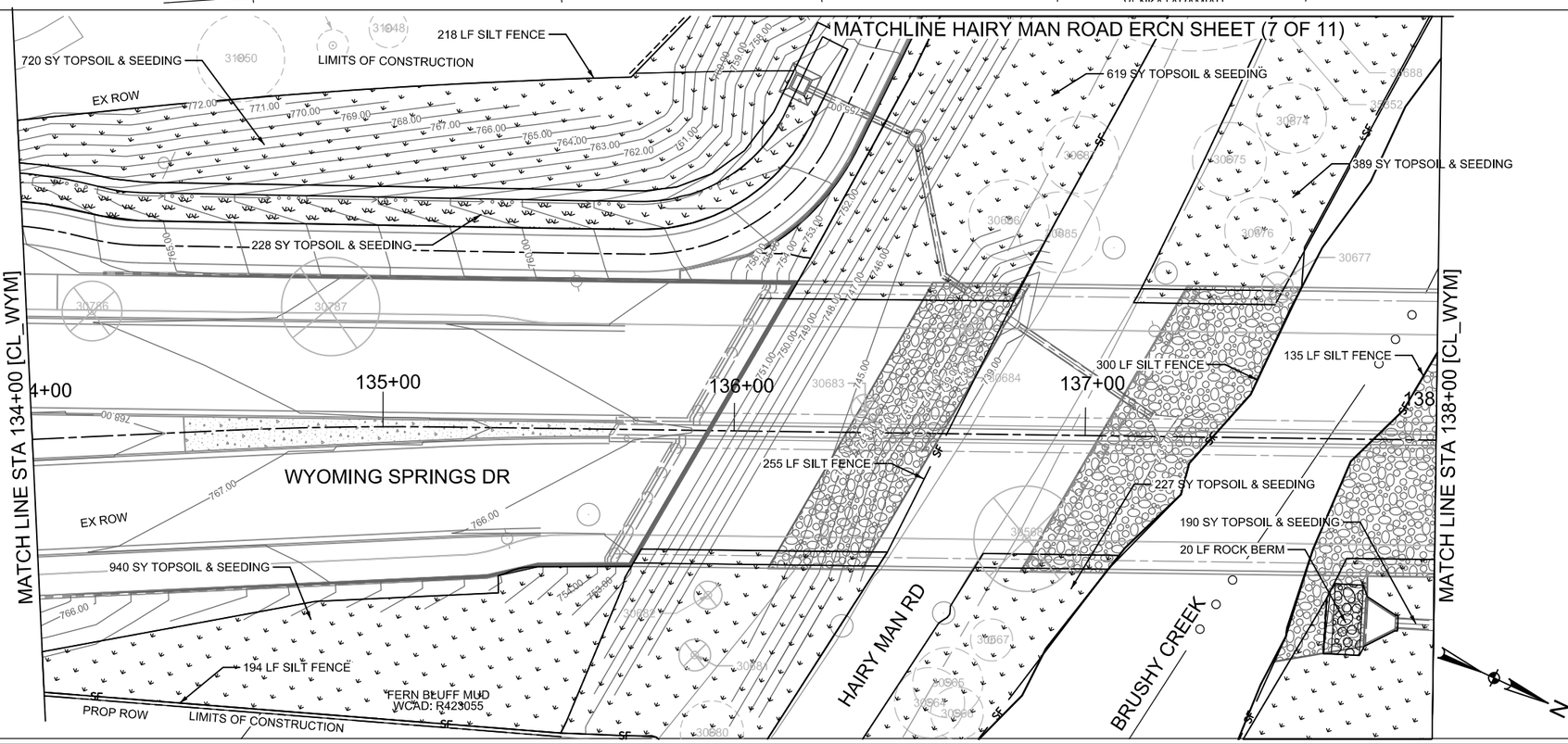

0 20 40 60 80

SCALE: 1"=40'

NOTES:

1. REFERENCE LANDSCAPE PLAN FOR ADDITIONAL SOIL STABILIZATION.

LEGEND

- SF — SILT FENCE
- CONSTRUCTION PERIMETER FENCE W/ DUST SCREEN
- RETAINING WALL
- EXISTING FEATURES
- PROPOSED ROW
- EXISTING ROW
- EASEMENT
- EXISTING CONTOURS
- LIMITS OF CONSTRUCTION
- SEEDING
- ROCK BERM
- TREE TO REMAIN
- TREE TO BE PROTECTED
- TREE TO BE REMOVED
- FLOW ARROWS
- INLET PROTECTION (I.P.)

WYOMING SPRINGS
SEGMENT 1
ROUND ROCK, TX

ROUND ROCK TEXAS

halff
13620 BRANTWICK DR
BLDG C, STE 100
AUSTIN, TX 78729
(512) 777-4600
TBPELS FIRM #312

Revision No.	Date	Description

F-312 8/14/23
STATE OF TEXAS
JEFFREY L. NAGY
133255
LICENSED PROFESSIONAL ENGINEER

100% SUBMITTAL

Project No.:	36179.002
Issued:	6/24/2023
Drawn By:	SG
Checked By:	JN
Scale:	1"=40'

Sheet Title
EROSION CONTROL
(4 OF 10)

495
Sheet Number

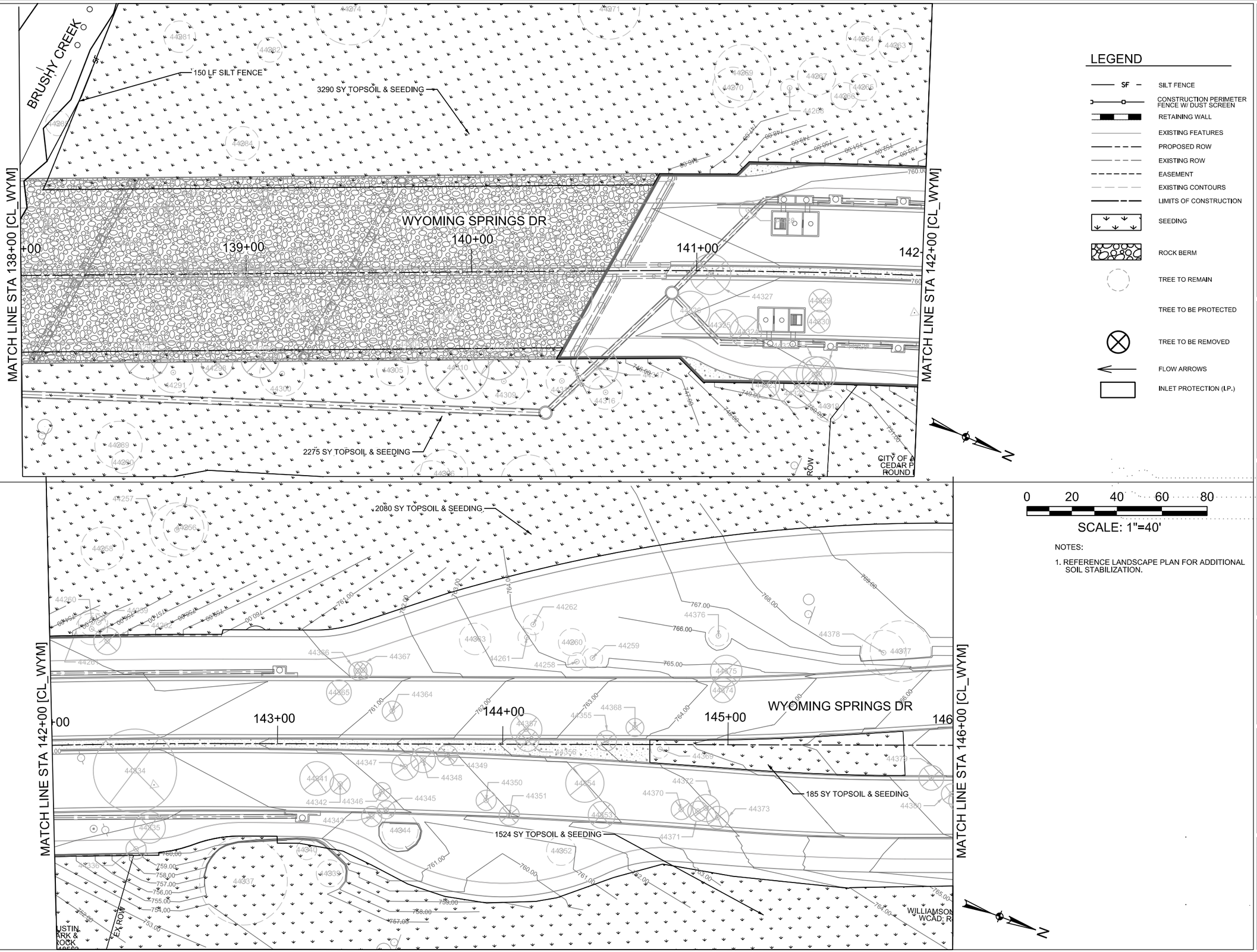

LEGEND

- SF — SILT FENCE
- CONSTRUCTION PERIMETER FENCE W/ DUST SCREEN
- RETAINING WALL
- EXISTING FEATURES
- PROPOSED ROW
- EXISTING ROW
- EASEMENT
- EXISTING CONTOURS
- LIMITS OF CONSTRUCTION
- SEEDING
- ROCK BERM
- TREE TO REMAIN
- TREE TO BE PROTECTED
- TREE TO BE REMOVED
- FLOW ARROWS
- INLET PROTECTION (I.P.)

0 20 40 60 80

SCALE: 1"=40'

NOTES:

1. REFERENCE LANDSCAPE PLAN FOR ADDITIONAL SOIL STABILIZATION.

WYOMING SPRINGS
SEGMENT 1
ROUND ROCK, TX

ROUND ROCK TEXAS

halff
13620 BRANTWICK DR
BLDG C, STE 100
AUSTIN, TX 78729
(512) 777-4800
TBPELS FIRM #312

Revision No.	Date	Description

F-312 8/14/23
STATE OF TEXAS
JEFFREY L NAGY
133255
LICENSED PROFESSIONAL ENGINEER

100% SUBMITTAL

Project No.:	36179.002
Issued:	8/24/2023
Drawn By:	SG
Checked By:	JN
Scale:	1"=40'

Sheet Title
EROSION CONTROL
(5 OF 10)

496
Sheet Number

EX ROW

LIMITS OF CONSTRUCTION

1887 SY TOPSOIL & SEEDING

WYOMING SPRINGS DR

MATCH LINE STA 146+00 [CL_WYM]

MATCH LINE STA 150+00 [CL_WYM]

1202 SY TOPSOIL & SEEDING

304 LF SILT FENCE

337 SY TOPSOIL & SEEDING

628 SY TOPSOIL & SEEDING

979 SY TOPSOIL & SEEDING

170 LF SILT FENCE

390 LF SILT FENCE

20 LF ROCK BERM

827 SY TOPSOIL & SEEDING

159 SY TOPSOIL & SEEDING

PROP ROW

24 LF SILT FENCE

LEGEND

- SF — SILT FENCE
- CONSTRUCTION PERIMETER FENCE W/ DUST SCREEN
- RETAINING WALL
- EXISTING FEATURES
- PROPOSED ROW
- EXISTING ROW
- EASEMENT
- EXISTING CONTOURS
- LIMITS OF CONSTRUCTION
- SEEDING
- ROCK BERM
- TREE TO REMAIN
- TREE TO BE PROTECTED
- TREE TO BE REMOVED
- FLOW ARROWS
- INLET PROTECTION (I.P.)

0 20 40 60 80

SCALE: 1"=40'

NOTES:

1. REFERENCE LANDSCAPE PLAN FOR ADDITIONAL SOIL STABILIZATION.

WYOMING SPRINGS
SEGMENT 1
ROUND ROCK, TX

ROUND ROCK TEXAS

halff
13620 BRANTWICK DR
BLDG C, STE 100
AUSTIN, TX 78729
(512) 777-4600
TBPELS FIRM #312

Revision No.	Date	Description

F-312 8/14/23
STATE OF TEXAS
JEFFREY L. NAGY
133255
LICENSED PROFESSIONAL ENGINEER

100% SUBMITTAL

Project No.:	36179.002
Issued:	6/24/2023
Drawn By:	SG
Checked By:	JN
Scale:	1"=40'

Sheet Title
EROSION CONTROL
(6 OF 10)

497
Sheet Number

1182 SY TOPSOIL & SEEDING
70 LF SILT FENCE
729 SY TOPSOIL & SEEDING
PROP ROW
LIMITS OF CONSTRUCTION
EX ROW
MATCH LINE STA 154+00 [CL_WYM]
155+00
156+00
157+00
158+00
107 SY TOPSOIL & SEEDING
WYOMING SPRINGS DR
20 LF ROCK BERM
SAM BASS RD
LIMITS OF CONSTRUCTION
EX ROW
158 LF SILT FENCE
PROP ROW
99 SY TOPSOIL & SEEDING
PROPOSED RECREATIONAL EASEMENT (VARIABLE WIDTH)
318 SY TOPSOIL & SEEDING
136+00
93 SY TOPSOIL & SEEDING
387 SY TOPSOIL & SEEDING
LIMITS OF CONSTRUCTION
HAIRY MAN RD
137+00
WYOMING SPRINGS DR
219 SY TOPSOIL & SEEDING

LEGEND

- SF — SILT FENCE
- CONSTRUCTION PERIMETER FENCE W/ DUST SCREEN
- RETAINING WALL
- EXISTING FEATURES
- PROPOSED ROW
- EXISTING ROW
- EASEMENT
- EXISTING CONTOURS
- LIMITS OF CONSTRUCTION
- SEEDING
- ROCK BERM
- TREE TO REMAIN
- TREE TO BE PROTECTED
- TREE TO BE REMOVED
- FLOW ARROWS
- INLET PROTECTION (I.P.)

0 20 40 60 80

SCALE: 1"=40'

NOTES:

1. REFERENCE LANDSCAPE PLAN FOR ADDITIONAL SOIL STABILIZATION.

N

WYOMING SPRINGS
SEGMENT 1
ROUND ROCK, TX

ROUND ROCK TEXAS

halff
13620 BRANTWICK DR
BLDG C, STE 100
AUSTIN, TX 78729
(512) 777-4800
TBPELS FIRM #312

Revision No.	Date	Description

E-312 8/14/23
STATE OF TEXAS
JEFFREY L. NAGY
133255
LICENSED PROFESSIONAL ENGINEER

100% SUBMITTAL

Project No.:	36179.002
Issued:	8/24/2023
Drawn By:	SG
Checked By:	JN
Scale:	1"=40'

Sheet Title
EROSION CONTROL
(7 OF 10)

498
Sheet Number

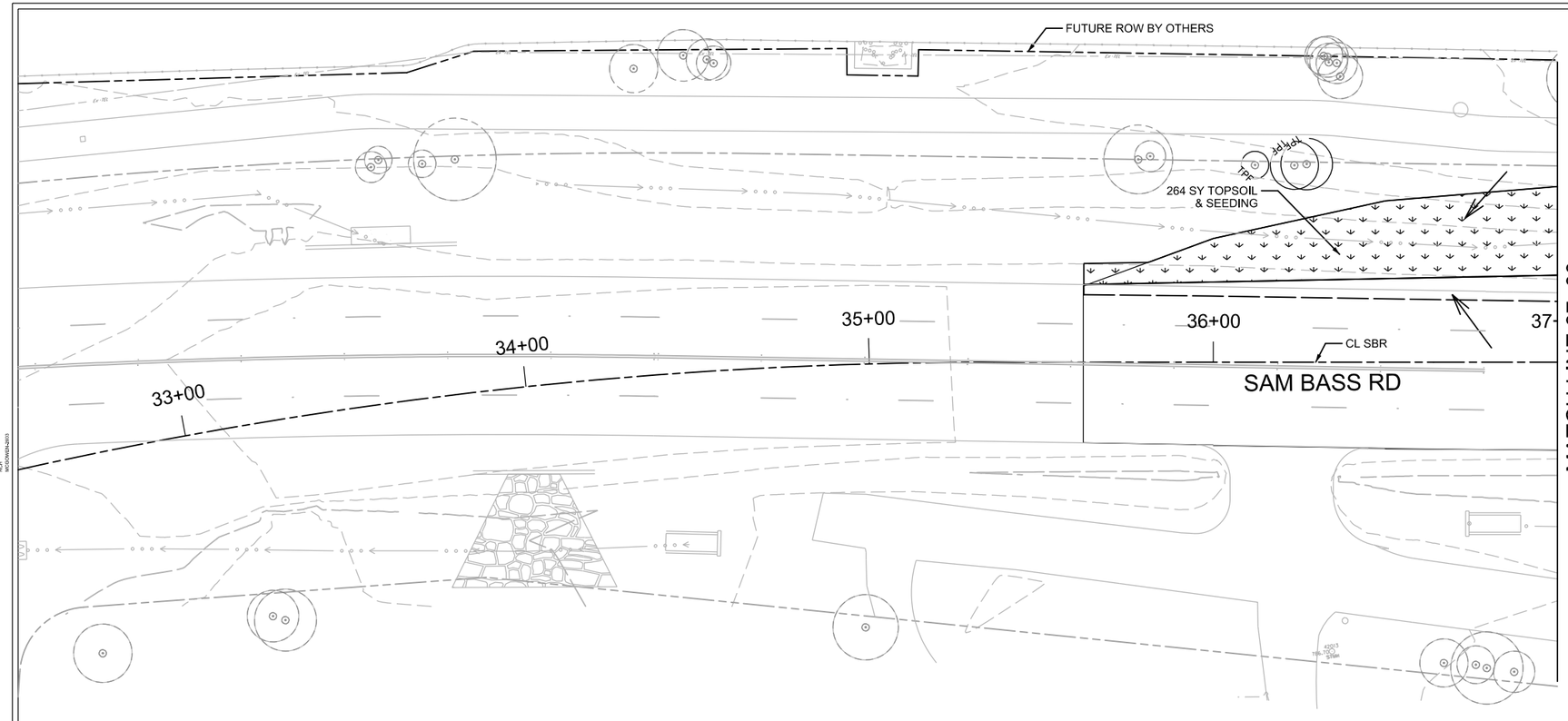

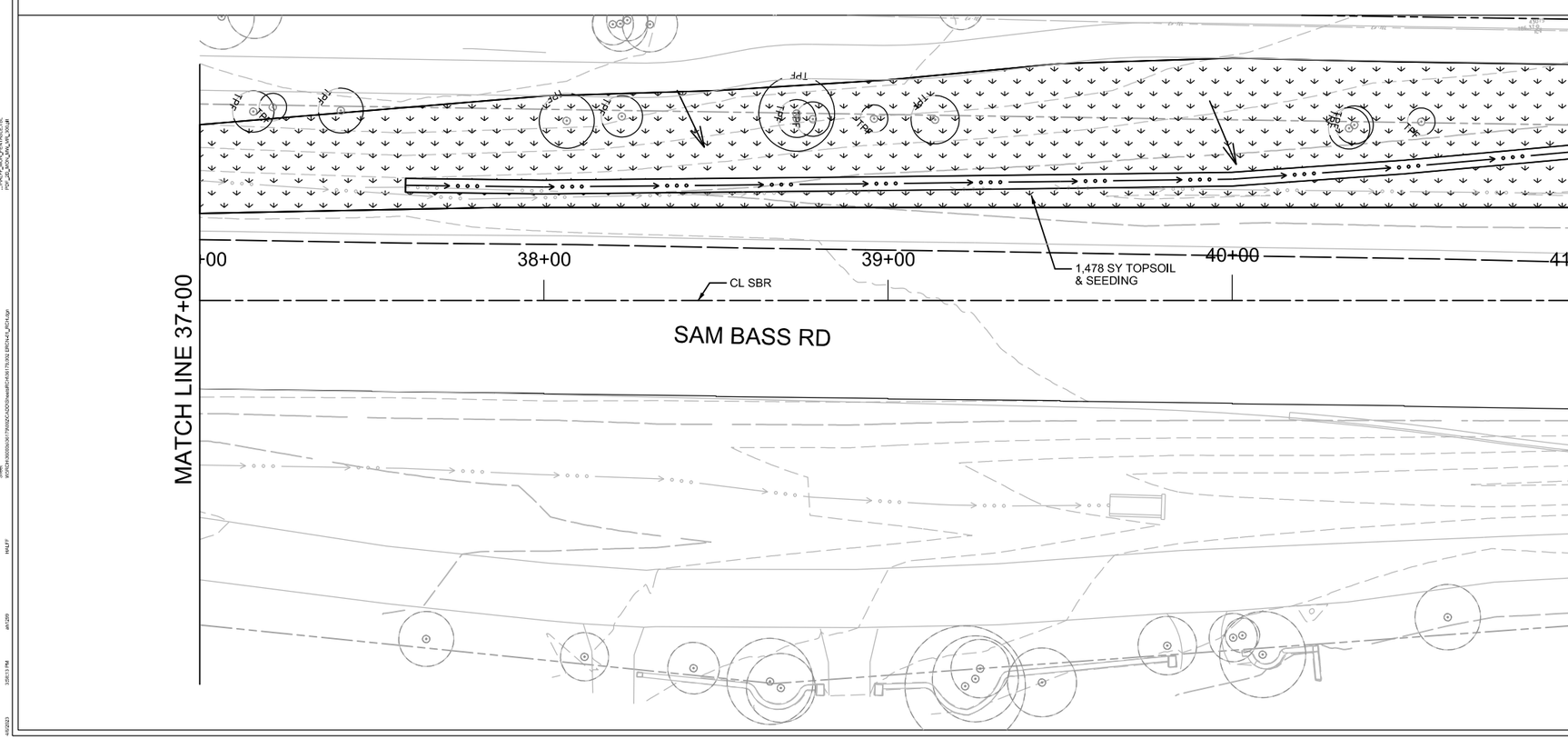

0 20 40 60 80

SCALE: 1"=40'

LEGEND

- SF — SILT FENCE
- CONSTRUCTION PERIMETER FENCE W/ DUST SCREEN
- RETAINING WALL
- EXISTING FEATURES
- PROPOSED ROW
- EXISTING ROW
- EASEMENT
- EXISTING CONTOURS
- LIMITS OF CONSTRUCTION
- SEEDING
- ROCK BERM
- TREE TO REMAIN
- TPF — TREE TO BE PROTECTED
- TREE TO BE REMOVED
- FLOW ARROWS
- INLET PROTECTION (I.P.)

WYOMING SPRINGS
SEGMENT 1
ROUND ROCK, TX

ROUND ROCK TEXAS

halff
13620 BRIARWICK DR
BLDG C, STE 100
AUSTIN, TX 78729
(512) 777-4600
TBPELS FIRM #312

Revision No.	Date	Description

STATE OF TEXAS
MELANIE S. CLEAVELIN
108945
LICENSED PROFESSIONAL ENGINEER
4/5/23

Melanie S Cleavelin

THIS SEAL APPEARING ON THIS DOCUMENT WAS AUTHORIZED BY MELANIE S. CLEAVELIN, P.E. 108945 ON 4/5/2023. ALTERATION OF A SEALED DOCUMENT WITHOUT PROPER NOTIFICATION TO THE RESPONSIBLE ENGINEER IS AN OFFENSE UNDER THE TEXAS ENGINEERING PRACTICE ACT. THE RECORD COPY OF THIS DRAWING IS ON FILE AT THE OFFICES OF HALFF ASSOCIATES, INC., 1201 NORTH BOWSER RD, RICHARDSON, TEXAS, 75081. TBPE FIRM #1313.

100% SUBMITTAL

811
Know what's **below.**
Call before you dig.

THE INFORMATION SHOWN ON THESE DRAWINGS INDICATING SIZE, TYPE AND LOCATION OF UNDERGROUND, SURFACE, AND AERIAL UTILITIES IS NOT GUARANTEED TO BE EXACT OR COMPLETE. THE CONTRACTOR SHALL CONTACT THE ROUND ROCK AREA "ONE CALL" SYSTEM AT 1-800-344-8377 (DIG TESS) 48 HOURS PRIOR TO BEGINNING ANY EXCAVATION FOR EXISTING UTILITY LOCATIONS. THE CONTRACTOR SHALL ALSO BE FULLY RESPONSIBLE FOR FIELD VERIFYING LOCATIONS AND ELEVATIONS OF ALL EXISTING UTILITIES AFFECTED BY CONSTRUCTION FOR THIS PROJECT IN ORDER TO AVOID DAMAGING THOSE UTILITIES, AND SHALL IMMEDIATELY ARRANGE FOR REPAIR AND RESTORATION OF CONTRACTOR- DAMAGED UTILITIES TO THE UTILITY COMPANY'S APPROVAL AT THE EXPENSE OF THE CONTRACTOR.

Project No.:	36179.002
Issued:	4/6/2023
Drawn By:	TM
Checked By:	MC
Scale:	1"=40'

Sheet Title
EROSION CONTROL
(8 OF 10)

499
Sheet Number

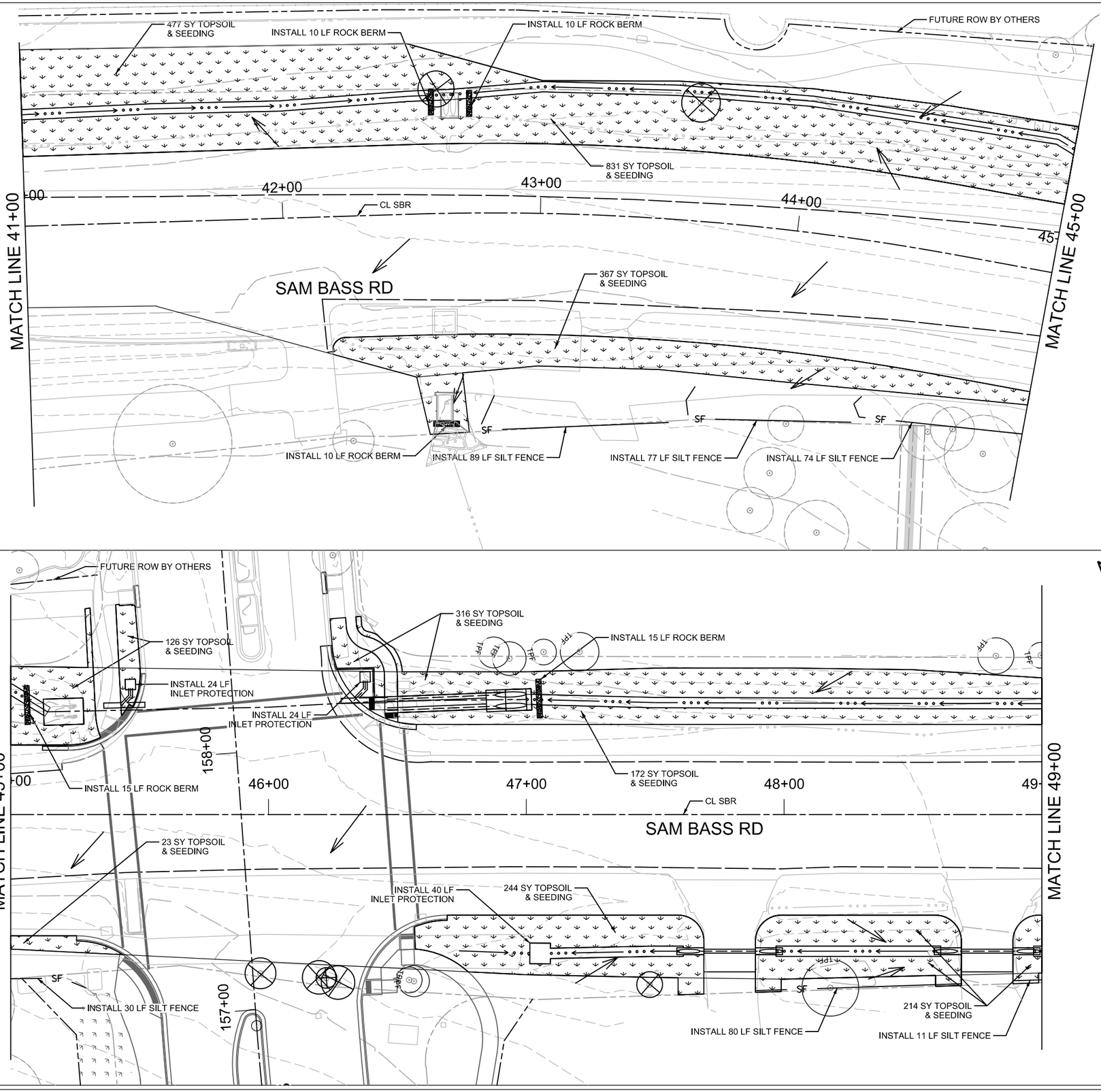

WYOMING SPRINGS
SEGMENT 1
ROUND ROCK, TX

ROUND ROCK TEXAS

halff
13620 BRANTWICK DR
BLDG C, STE 100
AUSTIN, TX 78729
(512) 777-4600
TBPELS FIRM #312

Revision No.	Date	Description

STATE OF TEXAS
MELANIE S. CLEAVELIN
108945
LICENSED
PROFESSIONAL ENGINEER
4/5/23
Melanie S Cleavelin

"THE SEAL APPEARING ON THIS DOCUMENT WAS AUTHORIZED BY MELANIE S. CLEAVELIN, P.E. 108945 ON 4/5/2023. IT IS A VIOLATION OF LAW FOR ANY PERSON, UNLESS PROPERLY AUTHORIZED TO DO SO, TO ALTER ANY PORTION OF THIS PLAN OR REPORT BEFORE IT IS RELEASED BY AN OFFICIAL REVIEWING AUTHORITY. ANY ALTERATION IS AN OFFENSE UNDER THE TEXAS ENGINEERING PRACTICE ACT. THE RECORD COPY OF THIS DRAWING IS ON FILE AT THE OFFICES OF HALFF ASSOCIATES, INC., 1201 NORTH BOWSER RD, RICHARDSON, TEXAS, 75081 (TBPE FIRM #312)."

100% SUBMITTAL

811 Know what's **below.** **Call** before you dig.

THE INFORMATION SHOWN ON THESE DRAWINGS INDICATING SIZE, TYPE AND LOCATION OF UNDERGROUND, SURFACE, AND AERIAL UTILITIES IS NOT GUARANTEED TO BE EXACT OR COMPLETE. THE CONTRACTOR SHALL CONTACT THE ROUND ROCK AREA "ONE CALL" SYSTEM AT 1-800-344-8377 (DIG TESS) 48 HOURS PRIOR TO BEGINNING ANY EXCAVATION FOR EXISTING UTILITY LOCATIONS. THE CONTRACTOR SHALL ALSO BE FULLY RESPONSIBLE FOR FIELD VERIFYING LOCATIONS AND ELEVATIONS OF ALL EXISTING UTILITIES AFFECTED BY CONSTRUCTION FOR THIS PROJECT IN ORDER TO AVOID DAMAGING THOSE UTILITIES, AND SHALL IMMEDIATELY ARRANGE FOR REPAIR AND RESTORATION OF CONTRACTOR- DAMAGED UTILITIES TO THE UTILITY COMPANY'S APPROVAL AT THE EXPENSE OF THE CONTRACTOR.

Project No.:	36179.002
Issued:	4/6/2023
Drawn By:	TM
Checked By:	MC
Scale:	1"=40'

Sheet Title
EROSION CONTROL
(9 OF 10)

500
Sheet Number

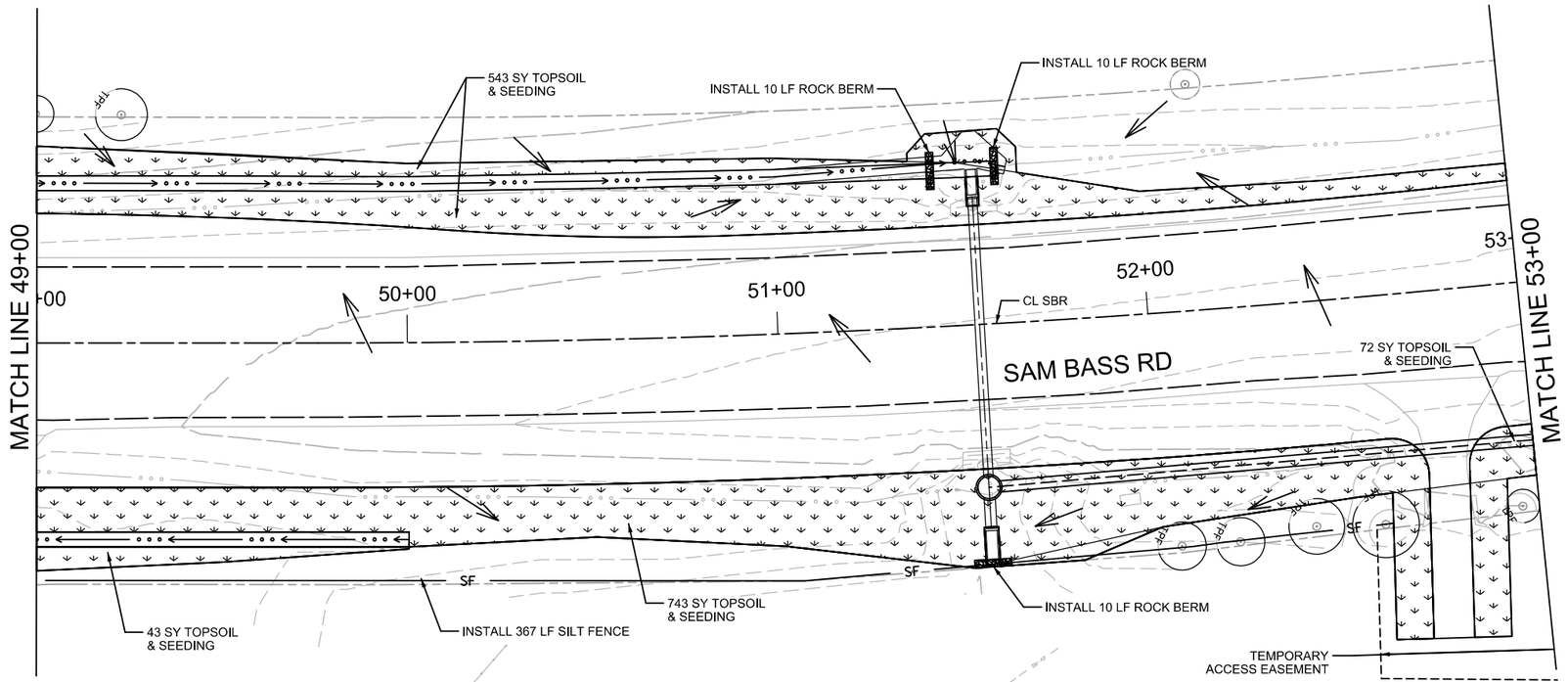

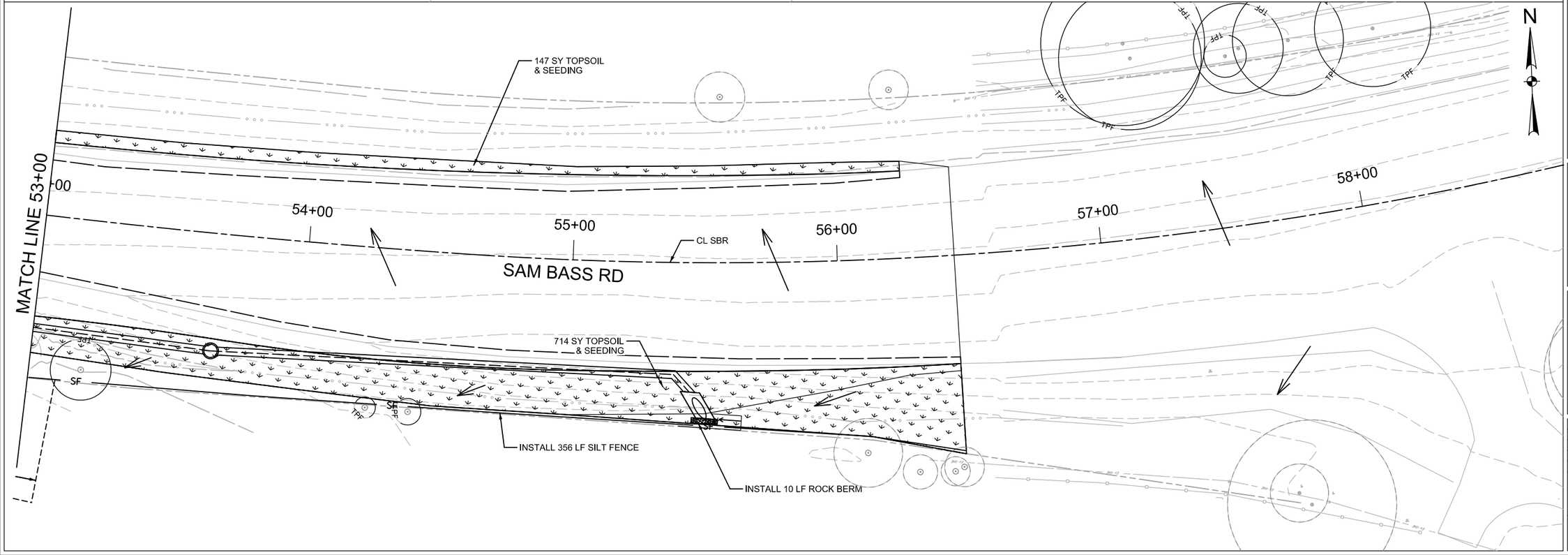

0 20 40 60 80

SCALE: 1"=40'

LEGEND

- SF — SILT FENCE
- CONSTRUCTION PERIMETER FENCE W/ DUST SCREEN
- RETAINING WALL
- EXISTING FEATURES
- PROPOSED ROW
- EXISTING ROW
- EASEMENT
- EXISTING CONTOURS
- LIMITS OF CONSTRUCTION
- SEEDING
- ROCK BERM
- TREE TO REMAIN
- TPF — TREE TO BE PROTECTED
- TREE TO BE REMOVED
- FLOW ARROWS
- INLET PROTECTION (I.P.)

WYOMING SPRINGS
SEGMENT 1
ROUND ROCK, TX

ROUND ROCK TEXAS

halff
13620 BRANTWICK DR
BLDG C, STE 100
AUSTIN, TX 78729
(512) 777-4600
TBPELS FIRM #312

Revision No.	Date	Description

STATE OF TEXAS
MELANIE S. CLEAVELIN
108945
LICENSED PROFESSIONAL ENGINEER
4/5/23

"THE SEAL APPEARING ON THIS DOCUMENT WAS AUTHORIZED BY MELANIE S. CLEAVELIN, P.E. 108945 ON 4/5/2023. IT IS A VIOLATION OF THE TEXAS ENGINEERING PRACTICE ACT FOR ANY PERSON NOT REGISTERED TO THE RESPONSIBLE ENGINEER TO AN OFFENSE UNDER THE TEXAS ENGINEERING PRACTICE ACT. THE RECORD COPY OF THIS DRAWING IS ON FILE AT THE OFFICES OF HALFF ASSOCIATES, INC., 1201 NORTH BOWSER RD, RICHARDSON, TEXAS, 75081 / (972) 235-3031."

100% SUBMITTAL

Project No.:	36179.002
Issued:	4/6/2023
Drawn By:	TM
Checked By:	MC
Scale:	1"=40'

Sheet Title
EROSION CONTROL
(10 OF 10)

501
Sheet Number

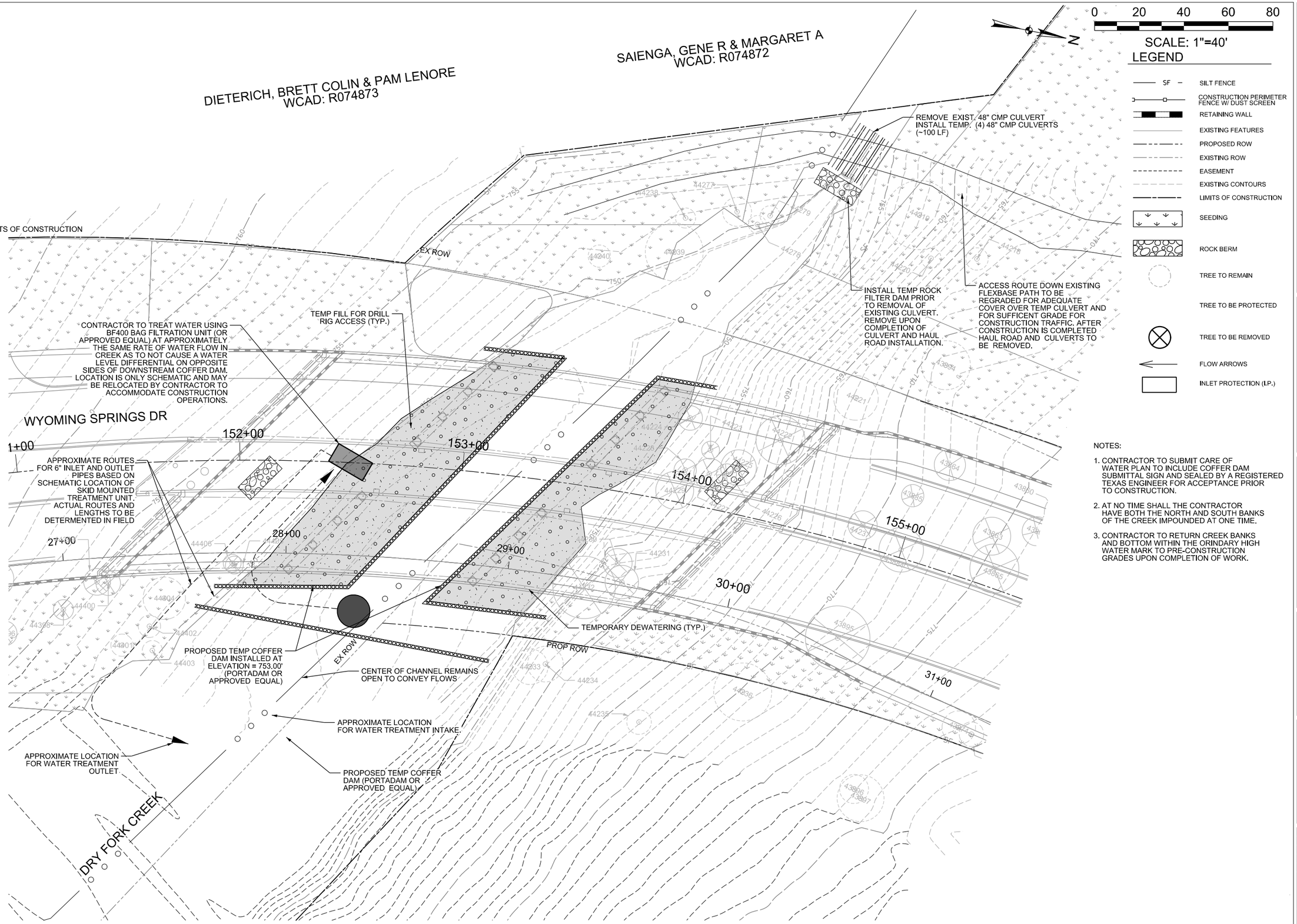

NOTES:

1. CONTRACTOR TO SUBMIT CARE OF WATER PLAN TO INCLUDE COFFER DAM SUBMITTAL SIGN AND SEALED BY A REGISTERED TEXAS ENGINEER FOR ACCEPTANCE PRIOR TO CONSTRUCTION.
2. AT NO TIME SHALL THE CONTRACTOR HAVE BOTH THE NORTH AND SOUTH BANKS OF THE CREEK IMPOUNDED AT ONE TIME.
3. CONTRACTOR TO RETURN CREEK BANKS AND BOTTOM WITHIN THE ORINDARY HIGH WATER MARK TO PRE-CONSTRUCTION GRADES UPON COMPLETION OF WORK.

WYOMING SPRINGS
SEGMENT 1
ROUND ROCK, TX

ROUND ROCK TEXAS

halff
13620 BRANTWICK DR
BLDG C, STE 100
AUSTIN, TX 78729
(512) 777-4800
TBPELS FIRM #312

Revision No.	Date	Description

F-312 4/17/23
STATE OF TEXAS
JEFFREY L. NAGY
133255
LICENSED
PROFESSIONAL ENGINEER

100% SUBMITTAL

Project No.:	36179.002
Issued:	4/17/2023
Drawn By:	SG
Checked By:	JN
Scale:	1"=40

Sheet Title
DRY FORK CREEK ACCESS PLAN

502
Sheet Number

4/17/2023 1:12:29 AM dh3914 HALFF Sheet E:\Projects\36179\002\CAD\Sheets\ASSY\179.002.ERCP-DK.dgn
USER:JNAY-HALFF-TX
PLOTTED BY:JNAY-HALFF-TX

1. ALL TREES NOT LOCATED WITHIN THE LIMITS OF CONSTRUCTION AND OUTSIDE OF DISTURBED AREAS SHALL BE PRESERVED. THE CONTRACTOR IS RESPONSIBLE FOR PROTECTING ALL TREES TO BE PRESERVED FROM HIS ACTIVITIES.
2. ALL TREES SHOWN TO BE RETAINED ON THE PLANS, SHALL BE PROTECTED DURING CONSTRUCTION WITH FENCING. SEE: TREE PROTECTION TREE WELLS (EC-02), TREE PROTECTION TREE LOCATION (EC-03) AND TREE PROTECTION FENCE-CHAIN LINK (EC-04).
3. TREE PROTECTION FENCES SHALL BE ERECTED ACCORDING TO CITY STANDARDS FOR TREE PROTECTION, INCLUDING TYPES OF FENCING AND SIGNAGE.
4. TREE PROTECTION FENCES SHALL BE INSTALLED PRIOR TO THE COMMENCEMENT OF ANY SITE PREPARATION WORK (CLEARING, GRUBBING, OR GRADING) AND SHALL BE MAINTAINED THROUGHOUT ALL PHASES OF THE CONSTRUCTION PROJECT.
5. EROSION AND SEDIMENTATION CONTROL BARRIERS SHALL BE INSTALLED OR MAINTAINED IN A MANNER WHICH DOES NOT RESULT IN SOIL BUILD-UP WITHIN TREE DRIPLINES.
6. FENCES SHALL COMPLETELY SURROUND THE TREE, OR CLUSTERS OF TREES, LOCATED AT THE OUTERMOST LIMITS OF THE TREE BRANCHES (DRIPLINE) OR CRITICAL ROOT ZONE (CRZ), WHICHEVER IS GREATER; AND SHALL BE MAINTAINED THROUGHOUT THE CONSTRUCTION PROJECT IN ORDER TO PREVENT THE FOLLOWING:
   6A. SOIL COMPACTION IN CRZ AREA RESULTING FROM VEHICULAR TRAFFIC OR STORAGE OF EQUIPMENT OR MATERIAL.
   6B. CRZ DISTURBANCES DUE TO GRADE CHANGES (GREATER THAN 6 INCHES CUT OR FILL) OR TRENCHING NOT REVIEWED AND AUTHORIZED BY THE FORESTRY MANAGER.
   6C. WOUNDS TO EXPOSED ROOTS, TRUNK, OR LIMBS BY MECHANICAL EQUIPMENT
   6D. OTHER ACTIVITIES DETRIMENTAL TO TREES SUCH AS CHEMICAL STORAGE, CONCRETE TRUCK CLEANING, AND FIRES.
7. EXCEPTIONS TO INSTALLING TREE FENCES AT THE TREE DRIPLINES OR CRZ, WHICHEVER IS GREATER, MAY BE PERMITTED IN THE FOLLOWING CASES:
   7A. WHERE THERE IS TO BE AN APPROVED GRADE CHANGE, IMPERMEABLE PAVING SURFACE, OR TREE WELL.
   7B. WHERE PERMEABLE PAVING IS TO BE INSTALLED, ERECT THE FENCE AT THE OUTER LIMITS OF THE PERMEABLE PAVING AREA.
   7C. WHERE TREES ARE CLOSE TO PROPOSED BUILDINGS, ERECT THE FENCE NO CLOSER THAN 6 FEET TO THE BUILDING.
   7D. WHERE THERE ARE SEVERE SPACE CONSTRAINTS DUE TO TRACT SIZE, OR OTHER SPECIAL REQUIREMENTS, CONTACT THE FORESTRY MANAGER TO DISCUSS ALTERNATIVES.
8. WHERE ANY OF THE ABOVE EXCEPTIONS RESULT IN A FENCE THAT IS CLOSER THAN 5 FEET TO A TREE TRUNK, THE TRUNK SHALL BE PROTECTED BY STRAPPED-ON PLANKING TO A HEIGHT OF 8 FEET (OR TO THE LIMITS OF LOWER BRANCHING) IN ADDITION TO THE REDUCED FENCING PROVIDED.
9. WHERE ANY OF THE ABOVE EXCEPTIONS RESULT IN AREAS OF UNPROTECTED ROOT ZONES UNDER THE DRIPLINE OR CRZ, WHICHEVER IS GREATER, THOSE AREAS SHOULD BE COVERED WITH 4 INCHES OF ORGANIC MULCH TO MINIMIZE SOIL COMPACTION.
10. ALL GRADING WITHIN CRZ AREAS SHALL BE DONE BY HAND OR WITH SMALL EQUIPMENT TO MINIMIZE ROOT DAMAGE. PRIOR TO GRADING, RELOCATE PROTECTIVE FENCING TO 2 FEET BEHIND THE GRADE CHANGE AREA.
11. ANY ROOTS EXPOSED BY CONSTRUCTION ACTIVITY SHALL BE PRUNED FLUSH WITH THE SOIL AND BACKFILLED WITH GOOD QUALITY TOP SOIL WITHIN TWO DAYS. IF EXPOSED ROOT AREAS CANNOT BE BACKFILLED WITHIN 2 DAYS, AN ORGANIC MATERIAL WHICH REDUCES SOIL TEMPERATURE AND MINIMIZES WATER LOSS DUE TO EVAPORATION SHALL BE PLACED TO COVER THE ROOTS UNTIL BACKFILL CAN OCCUR.
12. PRIOR TO EXCAVATION OR GRADE CUTTING WITHIN TREE DRIPLINES, A CLEAN CUT SHALL BE MADE BETWEEN THE DISTURBED AND UNDISTURBED ROOT ZONES WITH A ROCK SAW OR SIMILAR EQUIPMENT, IN A LOCATION AND TO A DEPTH APPROVED BY THE FORESTRY MANAGER, TO MINIMIZE DAMAGE TO REMAINING ROOTS.
13. TREES MOST HEAVILY IMPACTED BY CONSTRUCTION ACTIVITIES WILL BE WATERED DEEPLY ONCE A WEEK DURING PERIODS OF HOT, DRY WEATHER. TREE CROWNS ARE TO BE SPRAYED WITH WATER PERIODICALLY TO REDUCE DUST ACCUMULATION ON LEAVES.
14. WHEN INSTALLING CONCRETE ADJACENT TO THE ROOT ZONE OF A TREE, A PLASTIC VAPOR BARRIER SHALL BE PLACED BEHIND THE CONCRETE TO PROHIBIT LEACHING OF LIME INTO THE CRZ.
15. ANY TRENCHING REQUIRED FOR THE INSTALLATION OF LANDSCAPE IRRIGATION SHALL BE PLACED AS FAR FROM EXISTING TREE TRUNKS AS POSSIBLE.
16. NO LANDSCAPE TOPSOIL DRESSING GREATER THAN FOUR (4) INCHES SHALL BE PERMITTED WITHIN THE DRIPLINE OR CRZ OF TREES, WHICHEVER IS GREATER. NO TOPSOIL IS PERMITTED ON ROOT FLARES OF ANY TREE.
17. PRUNING TO PROVIDE CLEARANCE FOR STRUCTURES, VEHICULAR TRAFFIC, AND CONSTRUCTION EQUIPMENT SHALL TAKE PLACE BEFORE CONSTRUCTION BEGINS. ALL PRUNING MUST BE DONE ACCORDING TO CITY STANDARDS AND AS OUTLINED IN LITERATURE PROVIDED BY THE INTERNATIONAL SOCIETY OF ARBORICULTURE (ISA PRUNING TECHNIQUES).
18. ALL OAK TREE CUTS, INTENTIONAL OR UNINTENTIONAL, SHALL BE SEALED WITH AN APPROVED PRUNING SEALER IMMEDIATELY (WITHIN 10 MINUTES). PRUNING SEAL OR TREE PAINT MUST BE KEPT ON SITE AT ALL TIMES.
19. THE FORESTRY MANAGER HAS THE AUTHORITY TO REQUIRE ADDITIONAL TREE PROTECTION BEFORE OR DURING CONSTRUCTION.
20. TREES APPROVED FOR REMOVAL SHALL BE REMOVED IN A MANNER WHICH DOES NOT IMPACT TREES TO BE PRESERVED. REFER TO THE CITY OF ROUND ROUND ROCK TREE TECHNICAL MANUAL FOR APPROPRIATE REMOVAL METHODS.
21. PRIOR TO CONSTRUCTION, ALL LOWER TREE LIMBS OVER ROADWAYS MUST BE PRUNED TO A HEIGHT OF 14 FEET USING THE TECHNIQUES DESCRIBED IN THE CITY OF ROUND ROCK TREE TECHNICAL MANUAL.
22. DEVIATIONS FROM THE ABOVE NOTES MAY BE CONSIDERED ORDINANCE VIOLATIONS IF THERE IS NON COMPLIANCE OR IF A TREE SUSTAINS DAMAGE AS A RESULT.

FOR QUESTIONS CONCERNING THIS DETAIL, PLEASE CONTACT THE FORESTRY MANAGER.

SCALE: NTS

RECORD SIGNED COPY ON FILE APPROVED 01-28-21 DATE	CITY OF ROUND ROCK	DRAWING NO: EC-01 SHEET 1 of 1
THE ARCHITECT/ENGINEER ASSUMES RESPONSIBILITY FOR THE APPROPRIATE USE OF THIS DETAIL. (NOT TO SCALE)	TREE PROTECTION NOTES	ROUND ROCK TEXAS

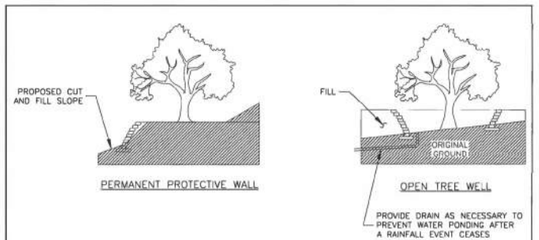

NOTE:

LOCATION, TYPE, DEPTHS AND CONSTRUCTION SPECIFICATIONS OF FILL, DRAINS AND WALLS SHALL BE SUBJECT TO THE APPROVAL OF THE FORESTRY MANAGER.

FOR QUESTIONS CONCERNING THIS DETAIL, PLEASE CONTACT THE FORESTRY MANAGER.

SCALE: NTS

RECORD SIGNED COPY ON FILE APPROVED 01-28-21 DATE	CITY OF ROUND ROCK	DRAWING NO: EC-02 SHEET 1 of 1
THE ARCHITECT/ENGINEER ASSUMES RESPONSIBILITY FOR THE APPROPRIATE USE OF THIS DETAIL. (NOT TO SCALE)	TREE PROTECTION TREE WELLS	ROUND ROCK TEXAS

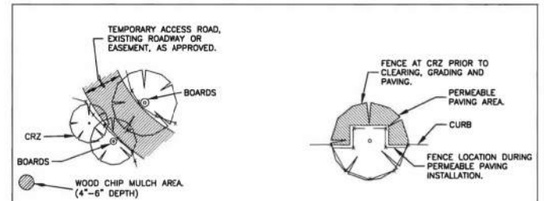

NOTE:

LIMITS OF MULCH AREAS AND DISTANCE FROM TRUNKS TO WORK/ PERMEABLE PAVING AREAS SHALL BE SUBJECT TO THE APPROVAL OF THE FORESTRY MANAGER.

FOR QUESTIONS CONCERNING THIS DETAIL, PLEASE CONTACT THE FORESTRY MANAGER.

SCALE: NTS

RECORD SIGNED COPY ON FILE APPROVED 01-28-21 DATE	CITY OF ROUND ROCK	DRAWING NO: EC-03 SHEET 1 of 1
THE ARCHITECT/ENGINEER ASSUMES RESPONSIBILITY FOR THE APPROPRIATE USE OF THIS DETAIL. (NOT TO SCALE)	TREE PROTECTION FENCE LOCATIONS	ROUND ROCK TEXAS

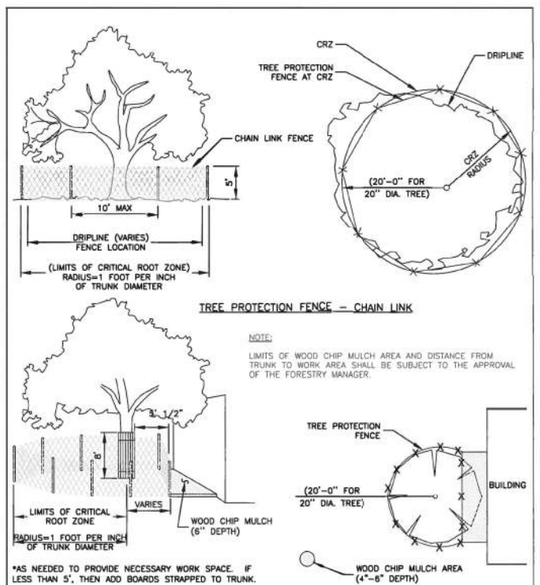

FOR QUESTIONS CONCERNING THIS DETAIL, PLEASE CONTACT THE FORESTRY MANAGER.

SCALE: NTS

RECORD SIGNED COPY ON FILE APPROVED 01-28-21 DATE	CITY OF ROUND ROCK	DRAWING NO: EC-04 SHEET 1 of 1
THE ARCHITECT/ENGINEER ASSUMES RESPONSIBILITY FOR THE APPROPRIATE USE OF THIS DETAIL. (NOT TO SCALE)	TREE PROTECTION FENCE CHAIN LINK	ROUND ROCK TEXAS

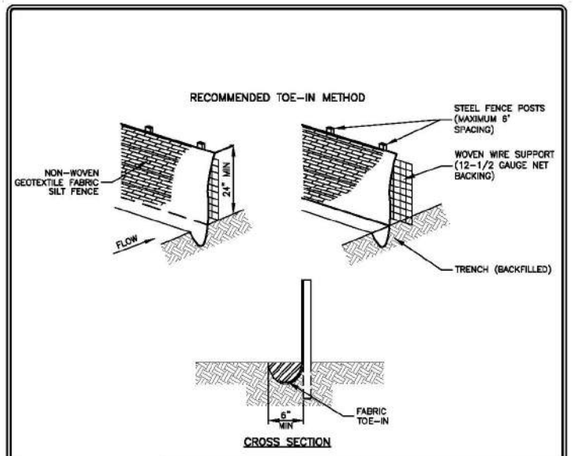

NOTES:

1. STEEL POSTS WHICH SUPPORT THE SILT FENCE SHALL BE INSTALLED ON A SLIGHT ANGLE TOWARD THE ANTICIPATED RUNOFF SOURCE. POST MUST BE EMBEDDED A MIN. OF ONE (1') FOOT.
2. THE TOE OF THE SILT FENCE SHALL BE TRENCHED IN WITH A SPADE OR MECHANICAL TRENCHER, SO THAT THE DOWNSLOPE FACE OF THE TRENCH IS FLAT AND PERPENDICULAR TO THE LINE OF FLOW. WHERE FENCE CANNOT BE TRENCHED IN (E.G. PAVEMENT) WEIGHT FABRIC FLAP WITH WASHED GRAVEL ON UPHILL SIDE TO PREVENT FLOW UNDER FENCE.
3. THE TRENCH MUST BE A MINIMUM OF 6 INCHES DEEP AND 6 INCHES WIDE TO ALLOW FOR THE SILT FENCE FABRIC TO BE LAID IN THE GROUND AND BACKFILLED WITH COMPACTED MATERIAL.
4. SILT FENCE SHALL BE SECURELY FASTENED TO EACH STEEL SUPPORT POST OR TO WOVEN WIRE, WHICH IN TURN IS SECURELY FASTENED TO THE STEEL FENCE POSTS.
5. INSPECTION SHALL BE MADE WEEKLY OR AFTER EACH RAINFALL EVENT AND REPAIR OR REPLACEMENT SHALL BE MADE PROMPTLY AS NEEDED.
6. SILT FENCE SHALL BE REMOVED WHEN THE SITE IS COMPLETELY STABILIZED SO AS NOT TO BLOCK OR IMPEDE STORM FLOW OR DRAINAGE.
7. ACCUMULATED SILT SHALL BE REMOVED WHEN IT REACHES A DEPTH OF 6 INCHES. THE SILT SHALL BE DISPOSED OF IN AN APPROVED SITE AND IN SUCH A MANNER AS TO NOT CONTRIBUTE TO ADDITIONAL SILTATION.
8. SILT FENCE SHALL BE REMOVED AS SOON AS THE SOURCE OF SEDIMENT IS STABILIZED

RECORD SIGNED COPY ON FILE AT PUBLIC WORKS APPROVED 03-25-11 DATE	CITY OF ROUND ROCK	DRAWING NO: EC-10
THE ARCHITECT/ENGINEER ASSUMES RESPONSIBILITY FOR THE APPROPRIATE USE OF THIS DETAIL. (NOT TO SCALE)	SILT FENCE DETAIL	ROUND ROCK TEXAS

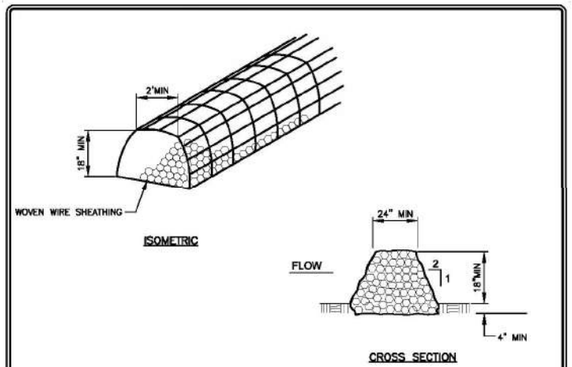

NOTES:

1. USE ONLY OPEN GRADED ROCK (3 to 5") DIAMETER FOR ALL CONDITIONS.
2. THE ROCK BERM SHALL BE SECURED WITH A WOVEN WIRE SHEATHING HAVING MAXIMUM 1" OPENING AND MINIMUM WIRE DIAMETER OF 20 GAUGE.
3. THE ROCK BERM SHALL BE INSPECTED DAILY OR AFTER EACH RAIN, AND THE STONE AND/ OR FABRIC CORE-WOVEN SHEATHING SHALL BE REPLACED WHEN THE STRUCTURE CEASES TO FUNCTION AS INTENDED, DUE TO SEDIMENT ACCUMULATION AMONG THE ROCKS, WASHOUT, CONSTRUCTION TRAFFIC DAMAGE, ETC.
4. IF SEDIMENT REACHES A DEPTH OF 6", THE SEDIMENT SHALL BE REMOVED AND DISPOSED OF ON AN APPROVED SITE AND IN A MANNER THAT WILL NOT CREATE A SEDIMENTATION PROBLEM.
5. WHEN THE SITE IS COMPLETELY STABILIZED, THE BERM AND ACCUMULATED SEDIMENT SHALL BE REMOVED AND DISPOSED OF IN AN APPROVED MANNER.

RECORD SIGNED COPY ON FILE AT PUBLIC WORKS APPROVED 03-25-11 DATE	CITY OF ROUND ROCK	DRAWING NO: EC-12
THE ARCHITECT/ENGINEER ASSUMES RESPONSIBILITY FOR THE APPROPRIATE USE OF THIS DETAIL. (NOT TO SCALE)	ROCK BERM DETAIL	ROUND ROCK TEXAS

WYOMING SPRINGS
SEGMENT 1
ROUND ROCK, TX

ROUND ROCK TEXAS

halff
13620 BRANTWICK DR
BLDG C, STE 100
AUSTIN, TX 78729
(512) 777-4600
TBPELS FIRM #312

Revision No.	Date	Description

F-3128 4/5/23
STATE OF TEXAS
JEFFREY L NAGY
133255
LICENSED
PROFESSIONAL ENGINEER

100% SUBMITTAL

Project No.:	36179.002
Issued:	4/17/2023
Drawn By:	
Checked By:	JN
Scale:	N.T.S

Sheet Title
EROSION CONTROL DETAILS (1 OF 2)

503
Sheet Number

USER: JAMES.NEWMAN@HALFF.COM
P:\PUR_GRO_WYOMING SPRINGS SEG 1\CAD\DGN\Details\EC-04.dgn
Date: 4/17/2023 11:51:01 AM
4172023

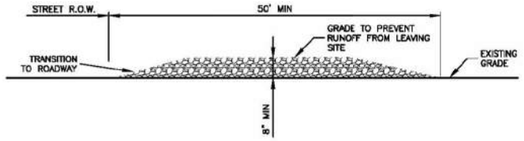

CROSS SECTION

NOTES:

1. STONE SIZE SHALL BE 3" – 8" OPEN GRADED ROCK.
2. THICKNESS OF CRUSHED STONE PAD TO BE NOT LESS THAN 8".
3. LENGTH SHALL BE A MINIMUM OF 50' FROM ACTUAL ROADWAY, AND WIDTH NOT LESS THAN FULL WIDTH OF INGRESS/EGRESS.
4. ENTRANCE SHALL BE PROPERLY GRADED TO PREVENT RUNOFF FROM LEAVING THE CONSTRUCTION SITE.
5. THE ENTRANCE SHALL BE MAINTAINED IN A CONDITION WHICH WILL PREVENT TRACKING OR FLOWING OF SEDIMENT ONTO PUBLIC RIGHTS OF WAY. ALL SEDIMENT SPILLED, DROPPED, WASHED OR TRACKED ONTO PUBLIC RIGHTS OF WAY MUST BE REMOVED IMMEDIATELY BY CONTRACTOR.
6. AS NECESSARY, WHEELS MUST BE CLEANED TO REMOVE SEDIMENT PRIOR TO ENTRANCE ONTO PUBLIC RIGHT OF WAY. WHEN WASHING IS REQUIRED, IT SHALL BE DONE ON AN AREA STABILIZED WITH CRUSHED STONE WHICH DRAINS INTO AN APPROVED SEDIMENT TRAP OR SEDIMENT BASIN. ALL SEDIMENT SHALL BE PREVENTED FROM ENTERING ANY STORM DRAIN, DITCH OR WATERCOURSE USING APPROVED METHODS.

RECORD SIGNED COPY ON FILE AT PUBLIC WORKS APPROVED 03-25-11 DATE THE ARCHITECT/ENGINEER ASSUMES RESPONSIBILITY FOR THE APPROPRIATE USE OF THIS DETAIL. (NOT TO SCALE)	CITY OF ROUND ROCK	DRAWING NO: EC-09
	STABILIZED CONSTRUCTION ENTRANCE DETAIL	

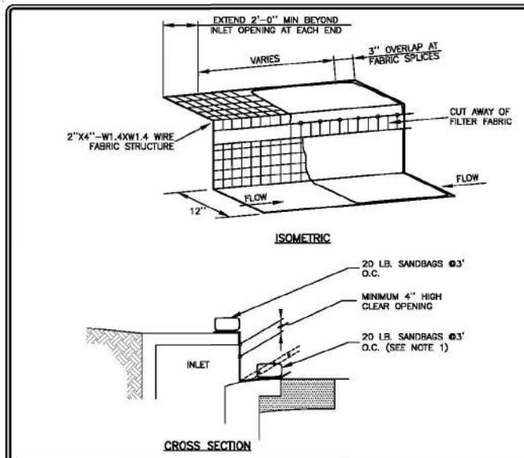

NOTES:

1. WHERE MINIMUM CLEARANCES CAUSE TRAFFIC TO DRIVE IN THE GUTTER, THE CONTRACTOR MAY SUBSTITUTE A 1" X 4" BOARD SECURED WITH CONCRETE NAILS 3' O.C. NAILED INTO THE GUTTER IN LIEU OF SANDBAGS TO HOLD THE FILTER DIKE IN PLACE. UPON REMOVAL, CLEAN ANY DIRT/DEBRIS FROM NAILING LOCATIONS, APPLY CHEMICAL SANDING AGENT AND APPLY NON-SHRINK GROUT FLUSH WITH SURFACE OF GUTTER.
2. A SECTION OF FILTER FABRIC SHALL BE REMOVED AS SHOWN ON THIS DETAIL OR AS DIRECTED BY THE ENGINEER OR DESIGNATED REPRESENTATIVE. FABRIC MUST BE SECURED TO WIRE BACKING WITH CLIPS OR HOG RINGS AT THIS LOCATION.
3. DAILY INSPECTION SHALL BE MADE BY THE CONTRACTOR AND SILT ACCUMULATION MUST BE REMOVED WHEN DEPTH REACHES 2".
4. CONTRACTOR SHALL MONITOR THE PERFORMANCE OF INLET PROTECTION DURING EACH RAINFALL EVENT AND IMMEDIATELY REMOVE THE INLET PROTECTIONS IF THE STORM-WATER BEGINS TO OVERTOP THE CURB.
5. INLET PROTECTIONS SHALL BE REMOVED AS SOON AS THE SOURCE OF SEDIMENT IS STABILIZED.

RECORD SIGNED COPY ON FILE AT PUBLIC WORKS APPROVED 03-25-11 DATE THE ARCHITECT/ENGINEER ASSUMES RESPONSIBILITY FOR THE APPROPRIATE USE OF THIS DETAIL. (NOT TO SCALE)	CITY OF ROUND ROCK	DRAWING NO: EC-14
	CURB INLET PROTECTION DETAIL	

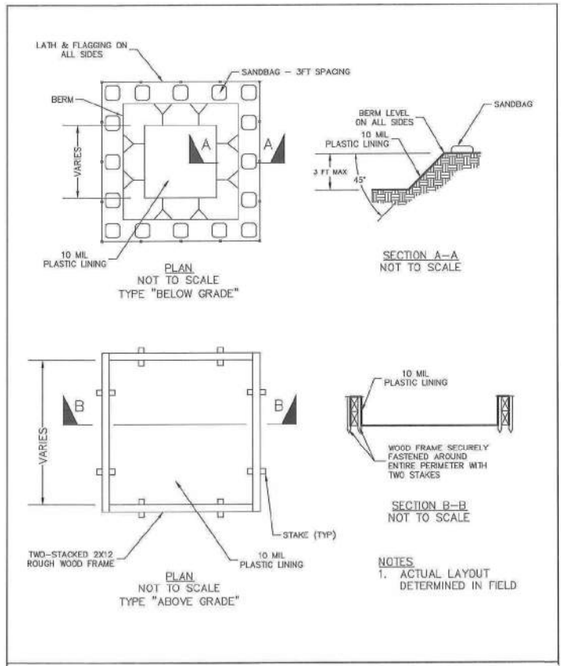

CONCRETE WASHOUT DETAIL

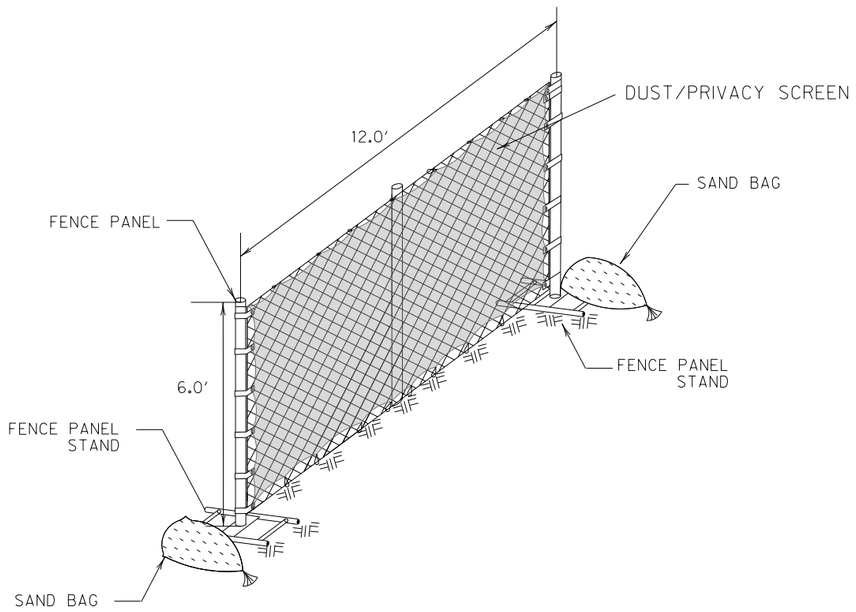

CONSTRUCTION PERIMETER FENCE DETAIL

WYOMING SPRINGS
SEGMENT 1
ROUND ROCK, TX

ROUND ROCK TEXAS

halff
13620 BRANTWICK DR
BLDG C, STE 100
AUSTIN, TX 78729
(512) 777-4600
TBPELS FIRM #312

Revision No.	Date	Description

F-312 4/5/23

STATE OF TEXAS
JEFFREY L. NAGY
133255
LICENSED
PROFESSIONAL ENGINEER

100% SUBMITTAL

Project No.:	36179.002
Issued:	4/17/2023
Drawn By:	
Checked By:	JN
Scale:	N.T.S

Sheet Title
EROSION CONTROL DETAILS (2 OF 2)

504
Sheet Number

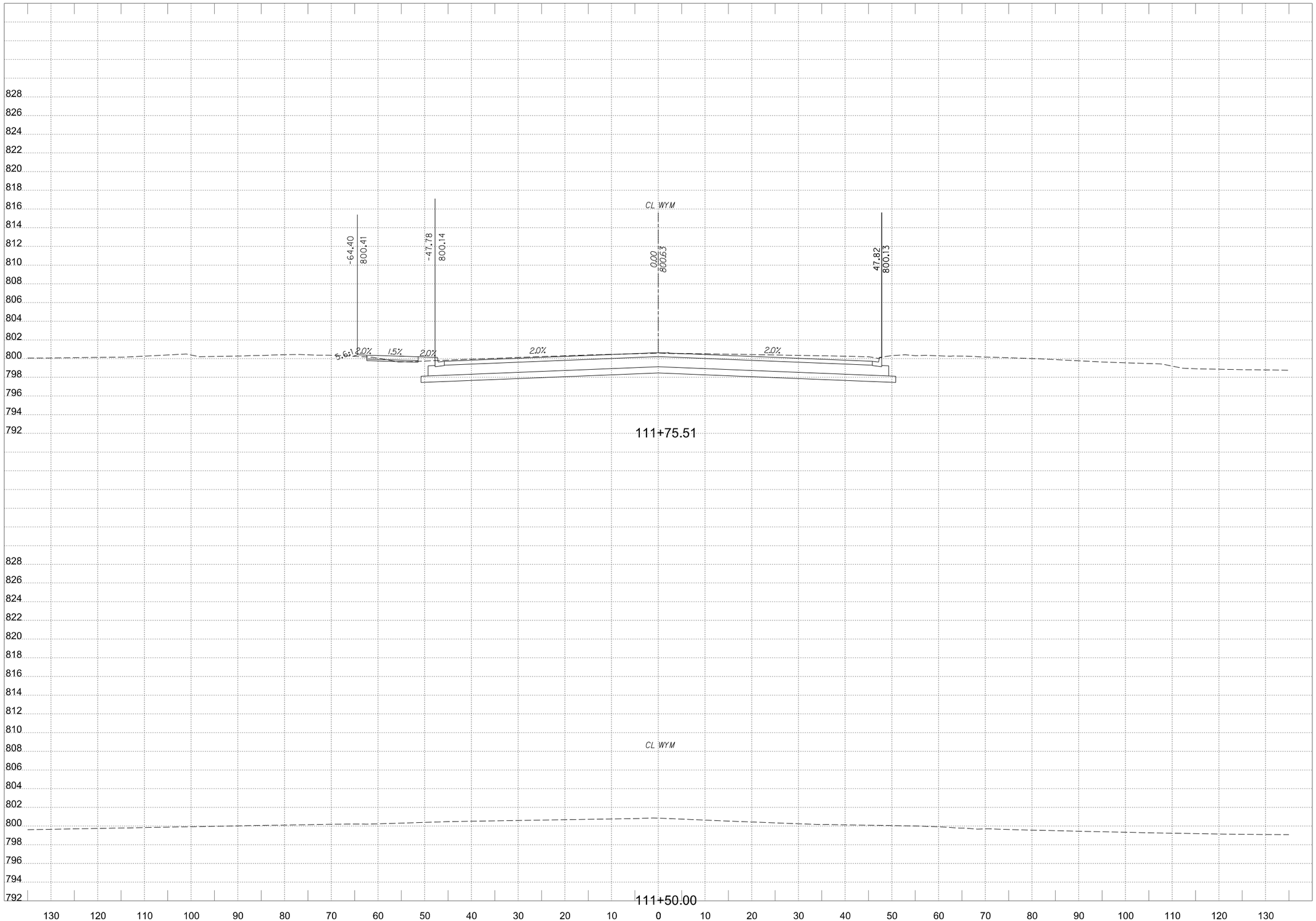

PDF_2D_MON_HW_MR_300.plt
Design
4/14/2023 3:29:20 PM ah3914 HALFF W:\AUS\36000s\36179\0022\CADD\Sheets\AUSWXS-SHEETS-36179.dgn

WYOMING SPRINGS

SEGMENT 1
Round Rock, Texas

HALFF
9500 AMBERGLEN BLVD
BLDG F, STE 125
AUSTIN, TX 78729
TEL (512) 777-4600
FAX (512) 252-8141

Revision No.	Date	Description

FOR INFORMATION ONLY

CROSS SECTIONS SHOULD NOT BE USED FOR CONSTRUCTION PURPOSES. REFER TO INFORMATION IN CONSTRUCTION PLANS.

0 5 10 15 20
HORIZONTAL SCALE IN FEET

0 5 10
VERTICAL SCALE IN FEET

Project No.:	36179
Issued:	4/14/2023
Drawn By:	JP
Checked By:	JN
Scale:	AS NOTED

Sheet Title

PROPOSED CROSS SECTIONS

505

Sheet Number

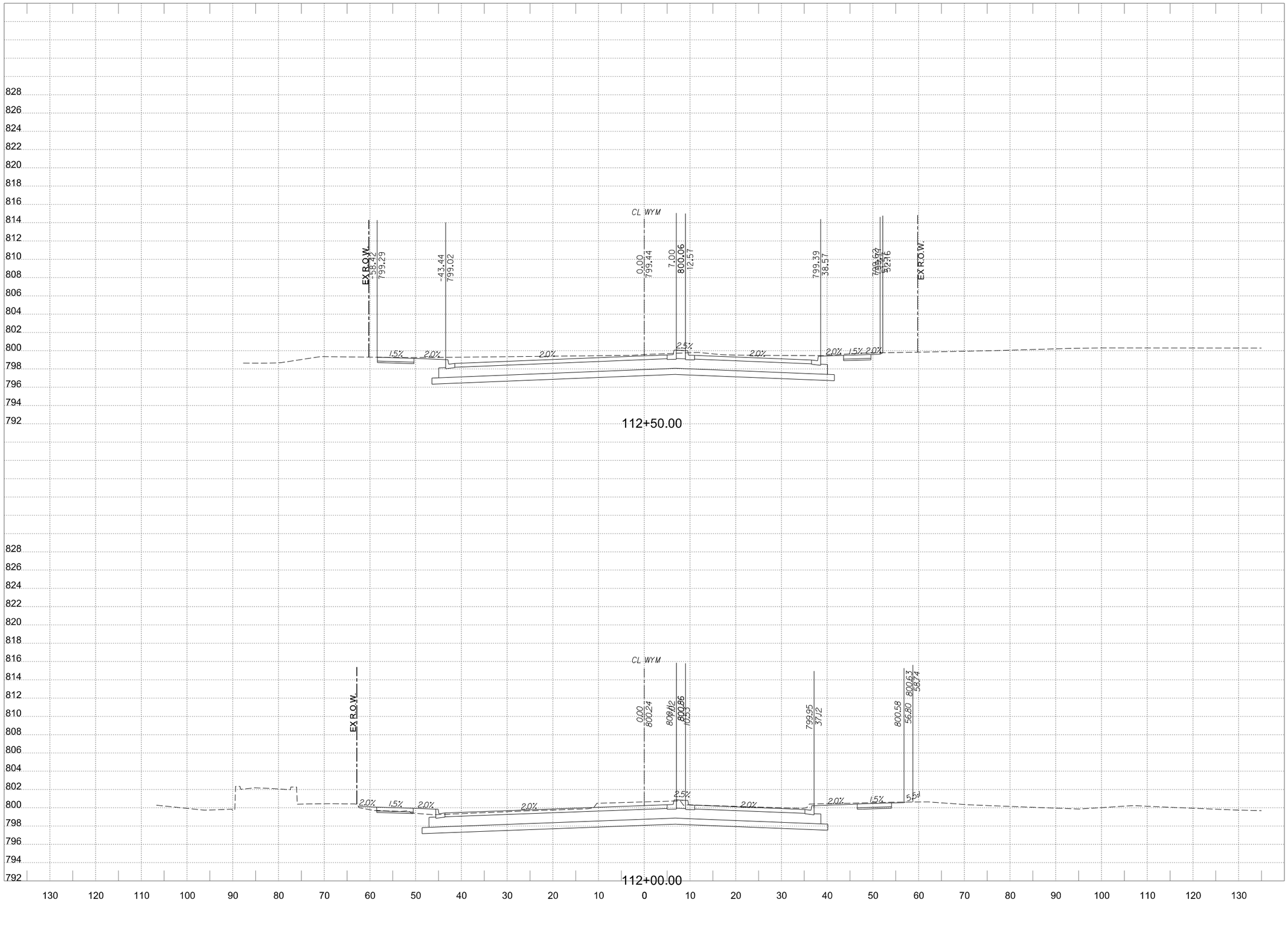

PDF_2D_MON_HW_MR_300.plt

Design

4/14/2023 3:29:21 PM ah3914 HALFF W:\AUS\36000s\36179002\CADD\Sheets\AUSWXS-SHEETS-36179.dgn

WYOMING SPRINGS

SEGMENT 1

Round Rock, Texas

HALFF

9500 AMBERGLEN BLVD
BLDG F, STE 125
AUSTIN, TX 78729
TEL (512) 777-4600
FAX (512) 252-8141

Revision No.	Date	Description
.	.	.
.	.	.
.	.	.
.	.	.
.	.	.
.	.	.
.	.	.
.	.	.

FOR INFORMATION ONLY

CROSS SECTIONS SHOULD NOT BE USED FOR CONSTRUCTION PURPOSES. REFER TO INFORMATION IN CONSTRUCTION PLANS.

0 5 10 15 20
HORIZONTAL SCALE IN FEET

0 5 10
VERTICAL SCALE IN FEET

Project No.:	36179
Issued:	4/14/2023
Drawn By:	JP
Checked By:	JN
Scale:	AS NOTED

Sheet Title

PROPOSED CROSS SECTIONS

506

Sheet Number

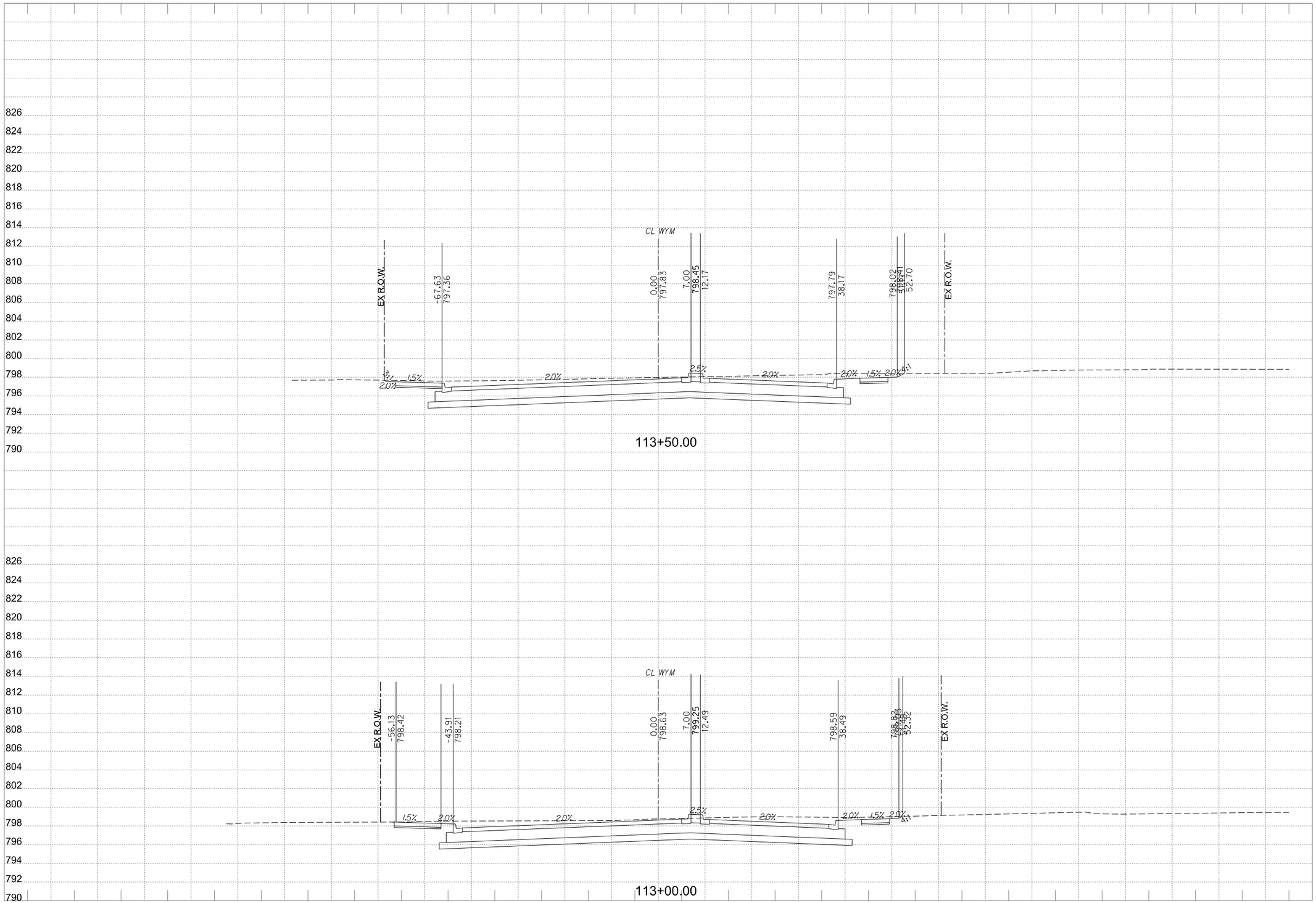

WYOMING SPRINGS
SEGMENT 1
Round Rock, Texas

HALFF
9500 AMBERGLEN BLVD
BLDG F, STE 125
AUSTIN, TX 78729
TEL (512) 777-4600
FAX (512) 252-8141

Revision No.	Date	Description
.	.	.
.	.	.
.	.	.
.	.	.
.	.	.
.	.	.
.	.	.
.	.	.

FOR INFORMATION ONLY

CROSS SECTIONS SHOULD NOT BE USED FOR CONSTRUCTION PURPOSES. REFER TO INFORMATION IN CONSTRUCTION PLANS.

0 5 10 15 20
HORIZONTAL SCALE IN FEET

0 5 10
VERTICAL SCALE IN FEET

Project No.:	36179
Issued:	4/14/2023
Drawn By:	JP
Checked By:	JN
Scale:	AS NOTED

Sheet Title
PROPOSED CROSS SECTIONS

507
Sheet Number

Design
PDF_2D_MON_HW_MR_300.plt
W:\AUS\36000s\36179002\CADD\Sheets\AUSWXS-SHEETS-36179.dgn
ah3914 HALFF
4/14/2023 3:29:22 PM

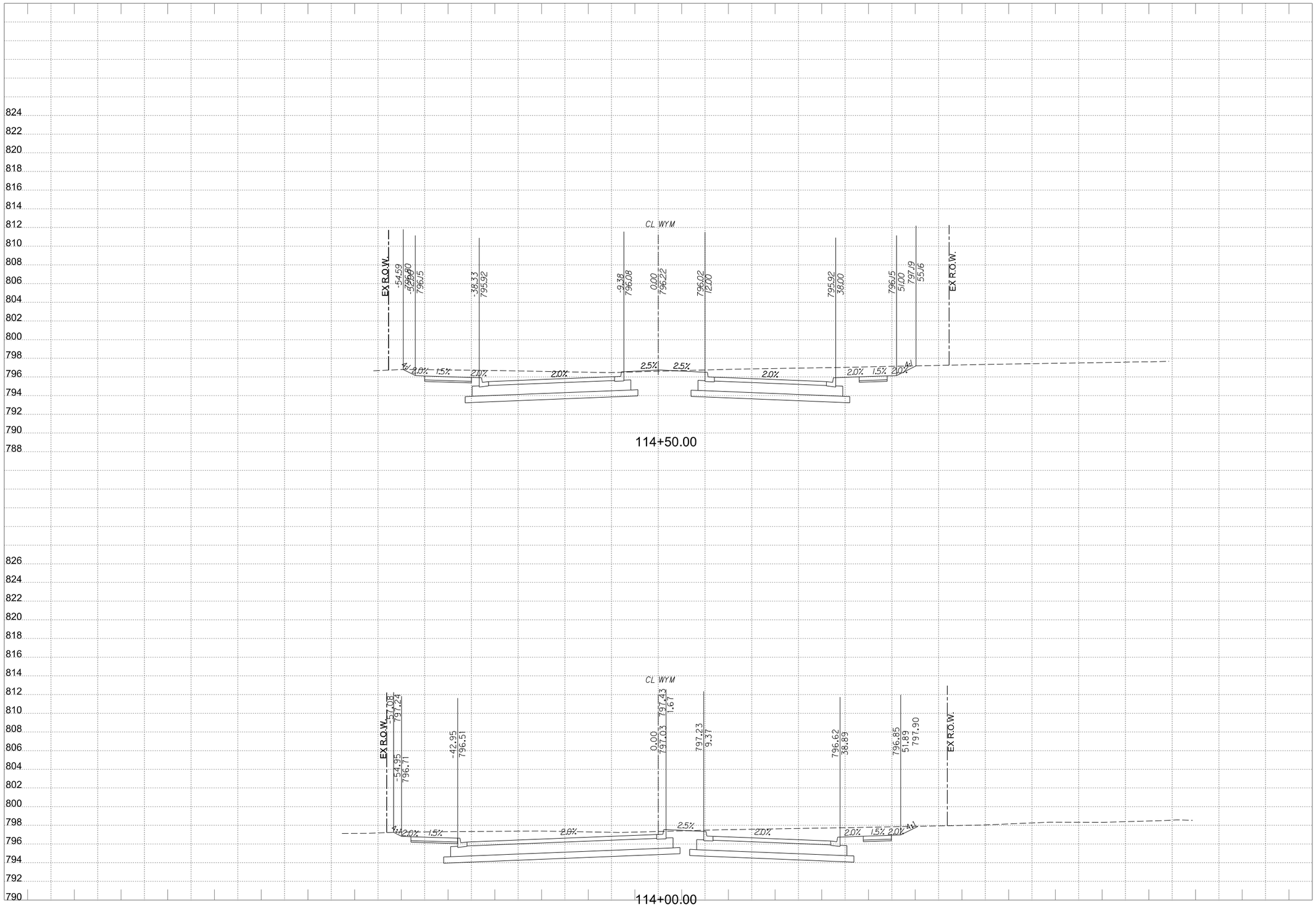

PDF_2D_MON_HW_MR_300.plt

Design

W:\AUS\36000s\36179002\CADD\Sheets\AUSWXS-SHEETS-36179.dgn

4/14/2023 3:29:23 PM ah3914 HALFF

WYOMING SPRINGS

SEGMENT 1

Round Rock, Texas

HALFF

9500 AMBERGLEN BLVD
BLDG F, STE 125
AUSTIN, TX 78729
TEL (512) 777-4600
FAX (512) 2826141

Revision No.	Date	Description

FOR INFORMATION ONLY

CROSS SECTIONS SHOULD NOT BE USED FOR CONSTRUCTION PURPOSES. REFER TO INFORMATION IN CONSTRUCTION PLANS.

0 5 10 15 20
HORIZONTAL SCALE IN FEET

0 5 10
VERTICAL SCALE IN FEET

Project No.:	36179
Issued:	4/14/2023
Drawn By:	JP
Checked By:	JN
Scale:	AS NOTED

Sheet Title

PROPOSED CROSS SECTIONS

508

Sheet Number

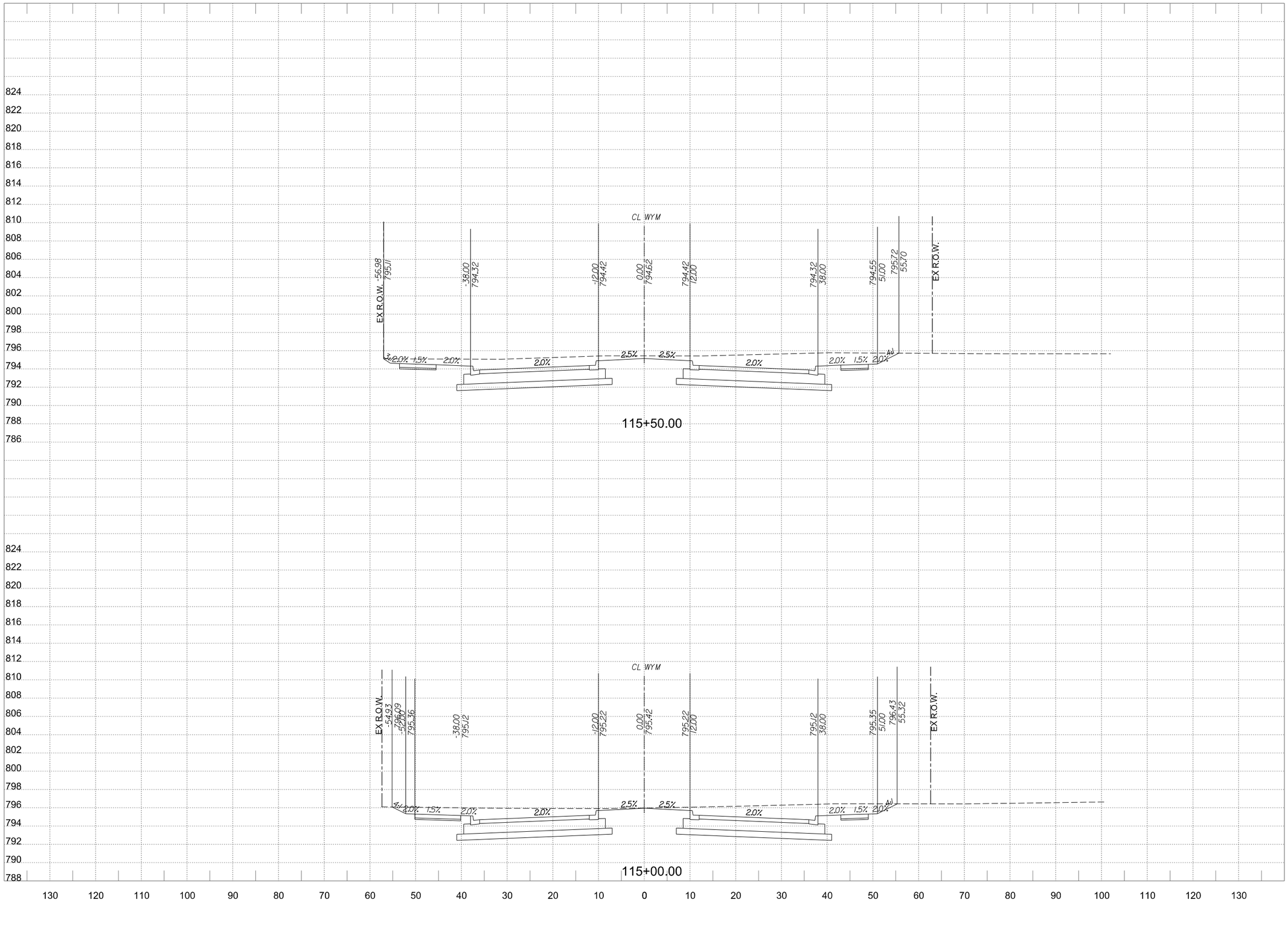

WYOMING SPRINGS
SEGMENT 1
Round Rock, Texas

HALFF
9500 AMBERGLEN BLVD
BLDG F, STE 125
AUSTIN, TX 78729
TEL (512) 777-4600
FAX (512) 2826141

Revision No.	Date	Description
.	.	.
.	.	.
.	.	.
.	.	.
.	.	.
.	.	.
.	.	.
.	.	.

FOR INFORMATION ONLY

CROSS SECTIONS SHOULD NOT BE USED FOR CONSTRUCTION PURPOSES. REFER TO INFORMATION IN CONSTRUCTION PLANS.

0 5 10 15 20
HORIZONTAL SCALE IN FEET

0 5 10
VERTICAL SCALE IN FEET

Project No.:	36179
Issued:	4/14/2023
Drawn By:	JP
Checked By:	JN
Scale:	AS NOTED

Sheet Title
PROPOSED CROSS SECTIONS

509
Sheet Number

Design
PDF_2D_MON_HW_MR_300.plt
W:\AUS\36000s\36179002\CADD\Sheets\AUSWXS-SHEETS-36179.dgn
ah3914 HALFF
4/14/2023 3:29:25 PM

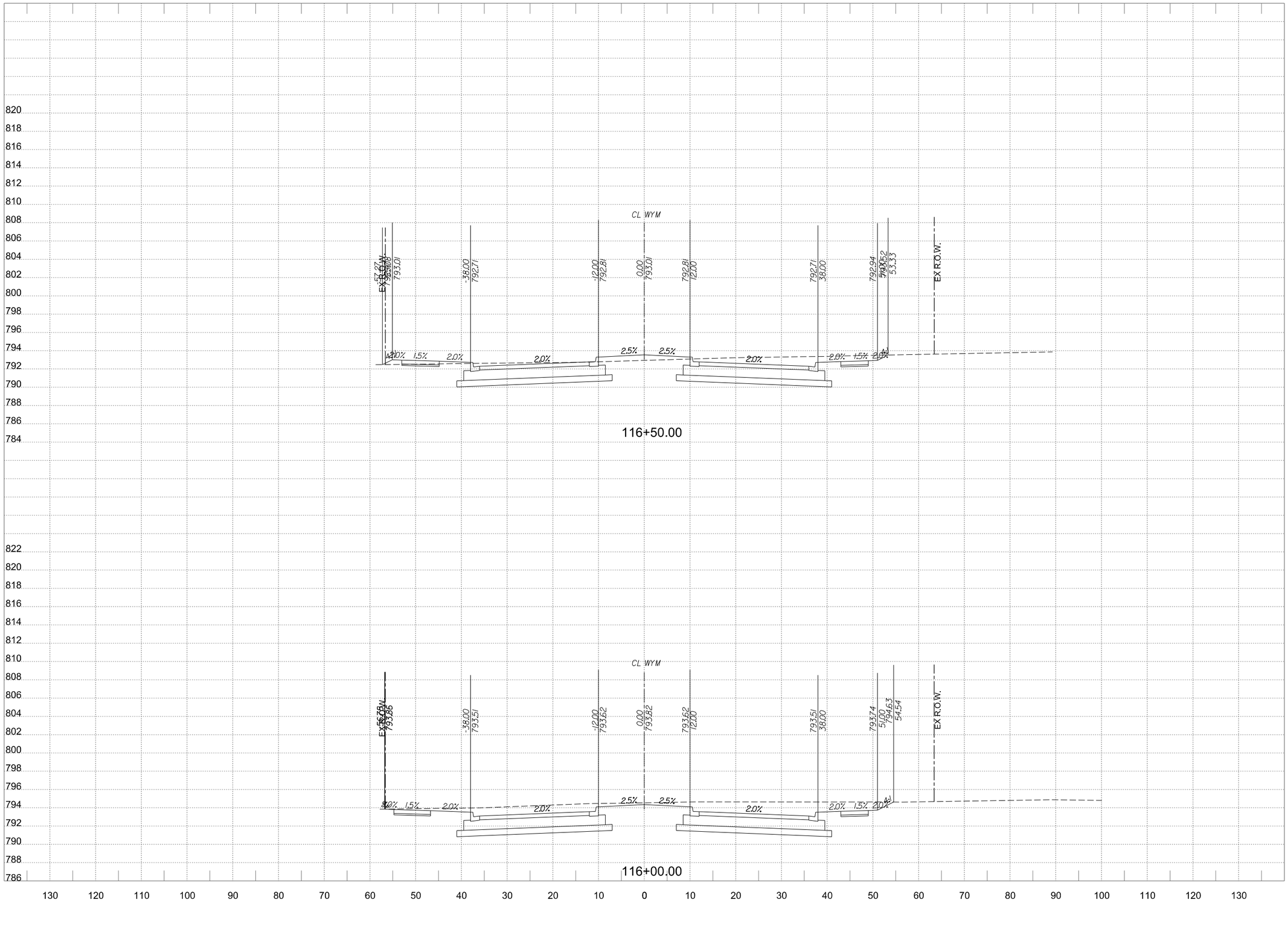

WYOMING SPRINGS
SEGMENT 1
Round Rock, Texas

HALFF
9500 AMBERGLEN BLVD
BLDG F, STE 125
AUSTIN, TX 78729
TEL (512) 777-4600
FAX (512) 252-8141

Revision No.	Date	Description

FOR INFORMATION ONLY

CROSS SECTIONS SHOULD NOT BE USED FOR CONSTRUCTION PURPOSES. REFER TO INFORMATION IN CONSTRUCTION PLANS.

0 5 10 15 20
HORIZONTAL SCALE IN FEET
0 5 10
VERTICAL SCALE IN FEET

Project No.:	36179
Issued:	4/14/2023
Drawn By:	JP
Checked By:	JN
Scale:	AS NOTED

Sheet Title
PROPOSED CROSS SECTIONS

510
Sheet Number

PDF_2D_MON_HW_MR_300.plt
Design
4/14/2023 3:29:26 PM ah3914 HALFF W:\AUS\36000s\36179002\CADD\Sheets\AUSWXS-SHEETS-36179.dgn

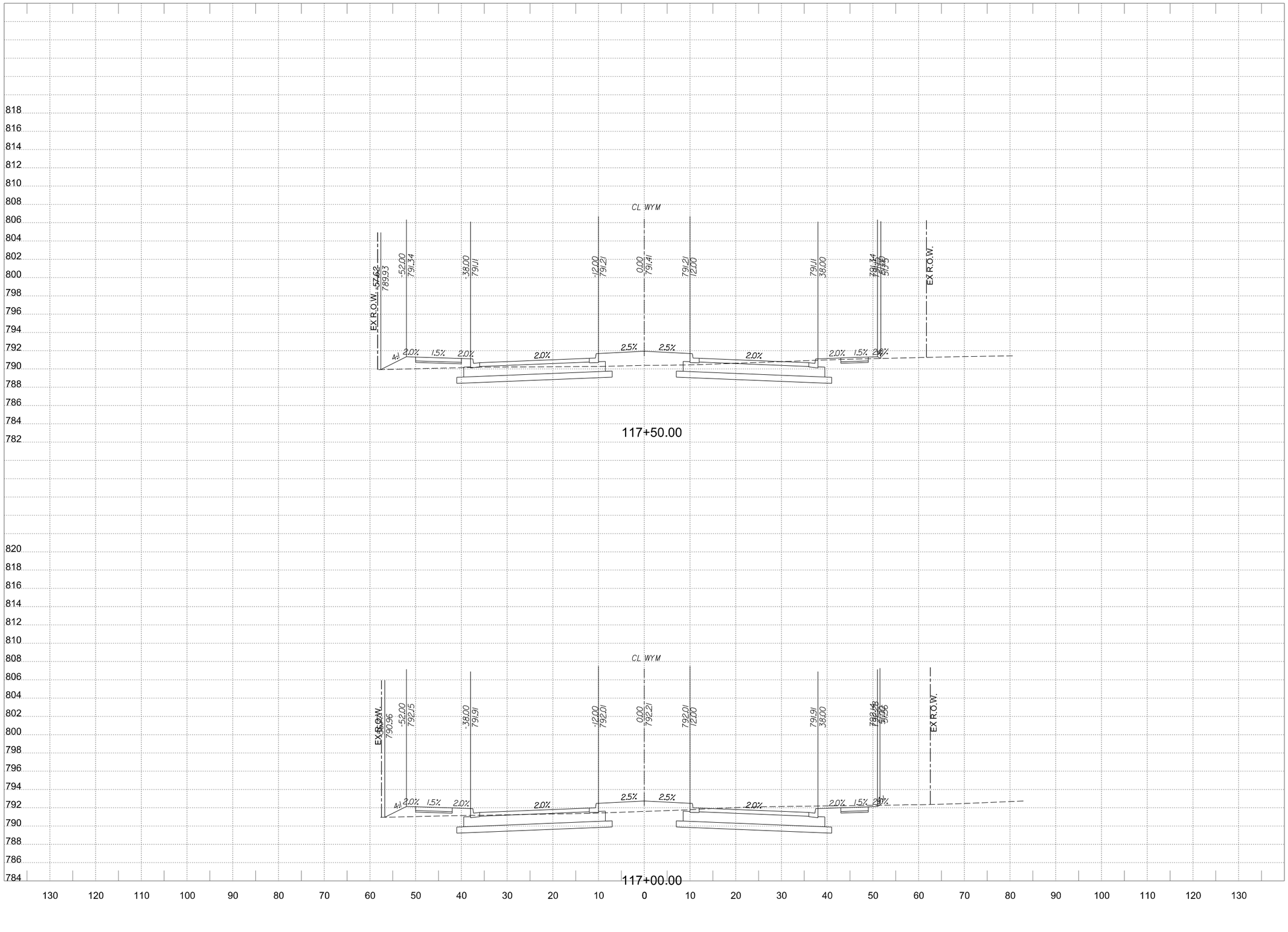

PDF_2D_MON_HW_MR_300.plt

Design

W:\AUS\36000s\36179002\CADD\Sheets\AUSWXS-SHEETS-36179.dgn

4/14/2023 3:29:27 PM ah3914 HALFF

WYOMING SPRINGS

SEGMENT 1

Round Rock, Texas

HALFF
9500 AMBERGLEN BLVD
BLDG F, STE 125
AUSTIN, TX 78729
TEL (512) 777-4600
FAX (512) 252-8141

Revision No.	Date	Description

FOR INFORMATION ONLY

CROSS SECTIONS SHOULD NOT BE USED FOR CONSTRUCTION PURPOSES. REFER TO INFORMATION IN CONSTRUCTION PLANS.

0 5 10 15 20
HORIZONTAL SCALE IN FEET

0 5 10
VERTICAL SCALE IN FEET

Project No.:	36179
Issued:	4/14/2023
Drawn By:	JP
Checked By:	JN
Scale:	AS NOTED

Sheet Title

PROPOSED CROSS SECTIONS

511

Sheet Number

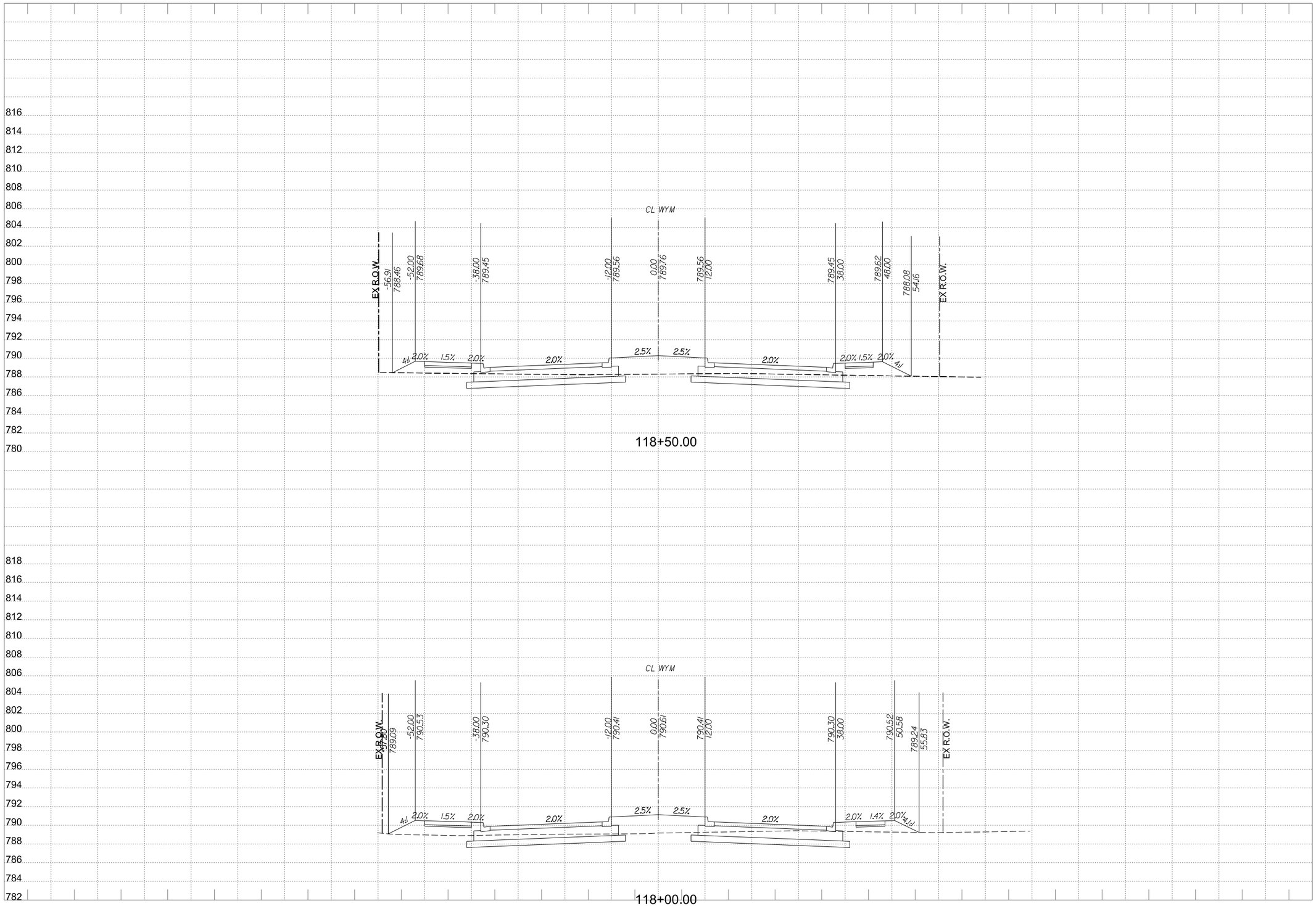

WYOMING SPRINGS
SEGMENT 1
Round Rock, Texas

HALFF
9500 AMBERGLEN BLVD
BLDG F, STE 125
AUSTIN, TX 78729
TEL (512) 777-4600
FAX (512) 252-8141

Revision No.	Date	Description
.	.	.
.	.	.
.	.	.
.	.	.
.	.	.
.	.	.
.	.	.
.	.	.

FOR INFORMATION ONLY

CROSS SECTIONS SHOULD NOT BE USED FOR CONSTRUCTION PURPOSES. REFER TO INFORMATION IN CONSTRUCTION PLANS.

0 5 10 15 20
HORIZONTAL SCALE IN FEET

0 5 10
VERTICAL SCALE IN FEET

Project No.:	36179
Issued:	4/14/2023
Drawn By:	JP
Checked By:	JN
Scale:	AS NOTED

Sheet Title
PROPOSED CROSS SECTIONS

512
Sheet Number

Design PDF_2D_MON_HW_MR_300.plt
4/14/2023 3:29:29 PM ah3914 HALFF W:\AUS\36000s\36179002\CADD\Sheets\AUS\XS-SHEETS-36179.dgn

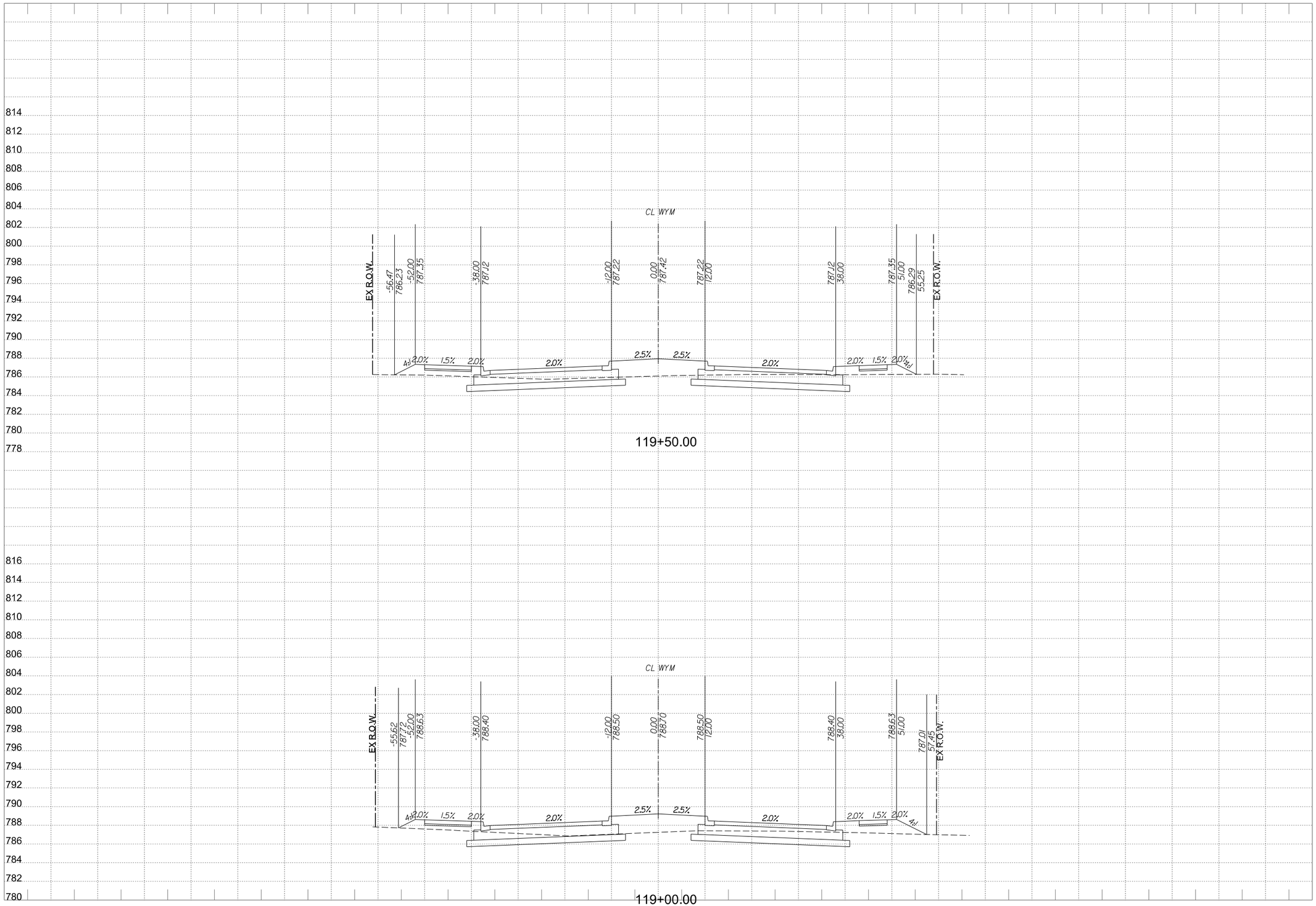

Design

PDF_2D_MON_HW_MR_300.plt

W:\AUS\36000s\36179002\CADD\Sheets\AUS\XS-SHEETS-36179.dgn

4/14/2023 3:29:30 PM ah3914 HALFF

WYOMING SPRINGS

SEGMENT 1

Round Rock, Texas

HALFF
9500 AMBERGLEN BLVD
BLDG F, STE 125
AUSTIN, TX 78729
TEL (512) 777-4600
FAX (512) 252-8141

Revision No.	Date	Description
.	.	.
.	.	.
.	.	.
.	.	.
.	.	.
.	.	.
.	.	.
.	.	.

FOR INFORMATION ONLY

CROSS SECTIONS SHOULD NOT BE USED FOR CONSTRUCTION PURPOSES. REFER TO INFORMATION IN CONSTRUCTION PLANS.

0 5 10 15 20
HORIZONTAL SCALE IN FEET

0 5 10
VERTICAL SCALE IN FEET

Project No.:	36179
Issued:	4/14/2023
Drawn By:	JP
Checked By:	JN
Scale:	AS NOTED

Sheet Title

PROPOSED CROSS SECTIONS

513

Sheet Number

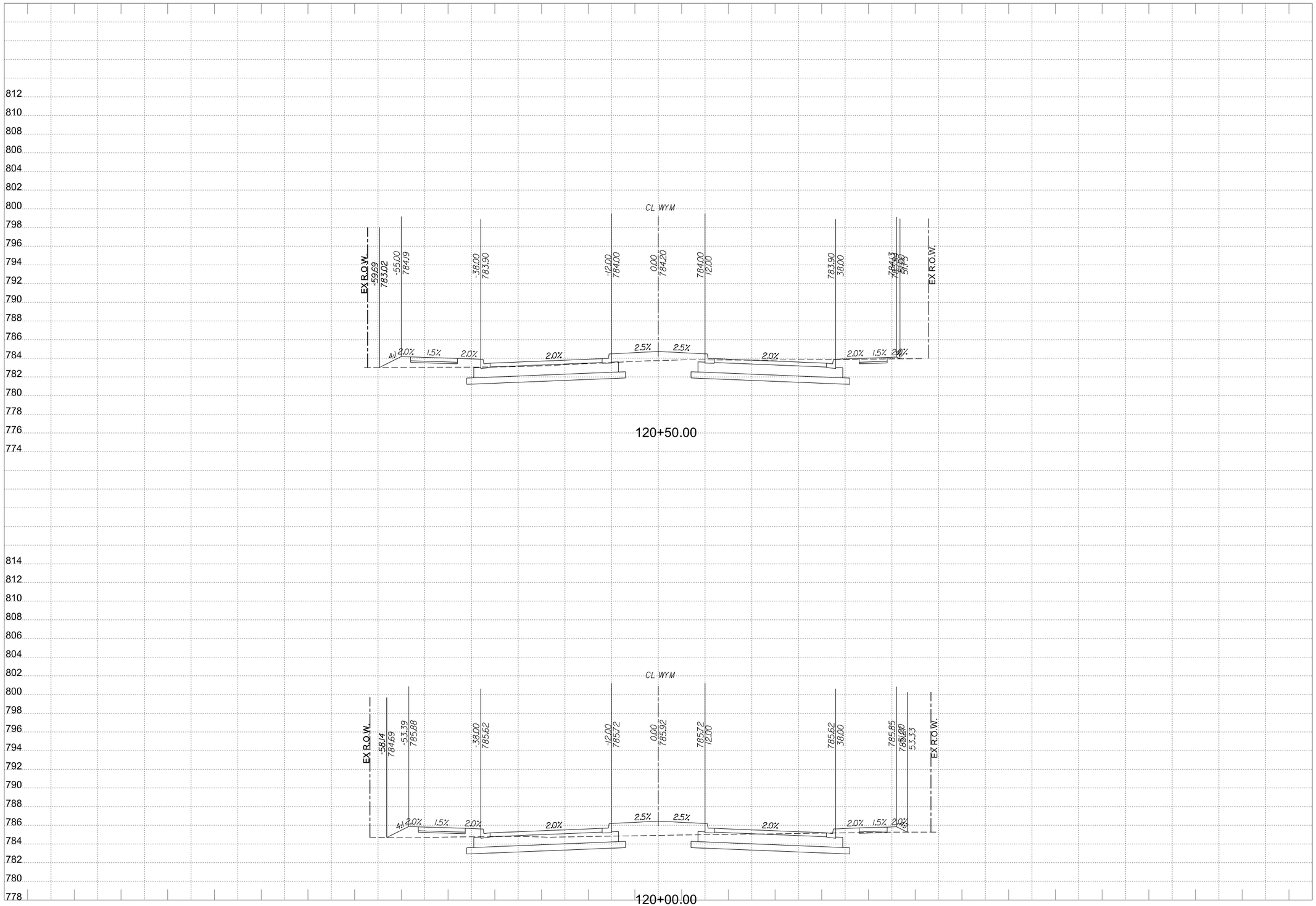

Design PDF_2D_MON_HW_MR_300.plt

4/14/2023 3:29:31 PM ah3914 HALFF W:\AUS\36000s\36179002\CADD\Sheets\AUSWXS-SHEETS-36179.dgn

WYOMING SPRINGS
SEGMENT 1
Round Rock, Texas

HALFF
9500 AMBERGLEN BLVD
BLDG F, STE 125
AUSTIN, TX 78729
TEL (512) 777-4600
FAX (512) 252-8141

Revision No.	Date	Description

FOR INFORMATION ONLY

CROSS SECTIONS SHOULD NOT BE USED FOR CONSTRUCTION PURPOSES. REFER TO INFORMATION IN CONSTRUCTION PLANS.

0 5 10 15 20
HORIZONTAL SCALE IN FEET

0 5 10
VERTICAL SCALE IN FEET

Project No.:	36179
Issued:	4/14/2023
Drawn By:	JP
Checked By:	JN
Scale:	AS NOTED

Sheet Title
PROPOSED CROSS SECTIONS

514
Sheet Number

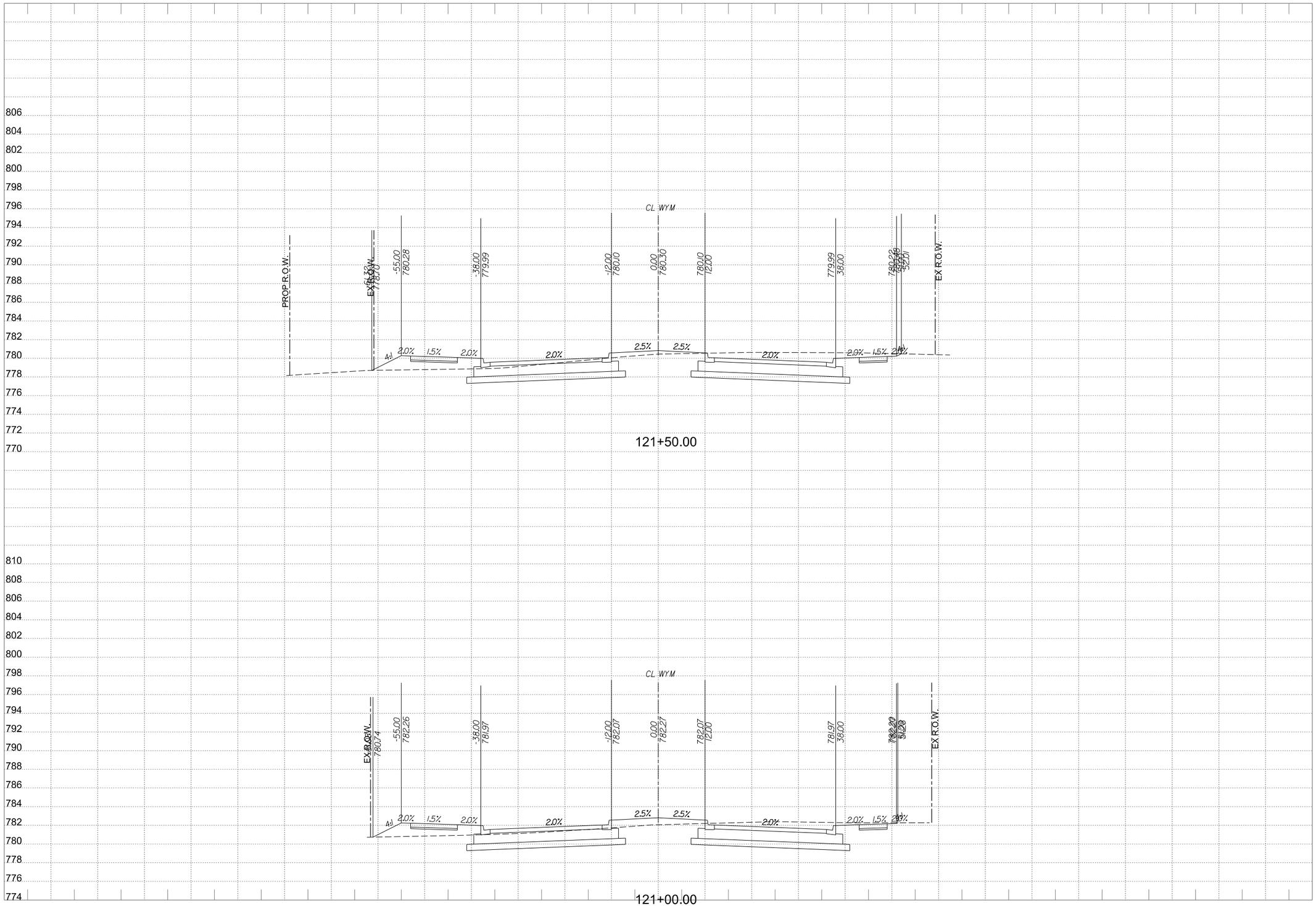

WYOMING SPRINGS
SEGMENT 1
Round Rock, Texas

HALFF
9500 AMBERGLEN BLVD
BLDG F, STE 125
AUSTIN, TX 78729
TEL (512) 777-4600
FAX (512) 252-8141

Revision No.	Date	Description
.	.	.
.	.	.
.	.	.
.	.	.
.	.	.
.	.	.
.	.	.
.	.	.

FOR INFORMATION ONLY

CROSS SECTIONS SHOULD NOT BE USED FOR CONSTRUCTION PURPOSES. REFER TO INFORMATION IN CONSTRUCTION PLANS.

0 5 10 15 20
HORIZONTAL SCALE IN FEET

0 5 10
VERTICAL SCALE IN FEET

Project No.:	36179
Issued:	4/14/2023
Drawn By:	JP
Checked By:	JN
Scale:	AS NOTED

Sheet Title
PROPOSED CROSS SECTIONS

515
Sheet Number

Design
PDF_2D_MON_HW_MR_300.plt
W:\AUS\36000s\36179002\CADD\Sheets\AUSXS-SHEETS-36179.dgn
4/14/2023 3:29:32 PM ah3914 HALFF

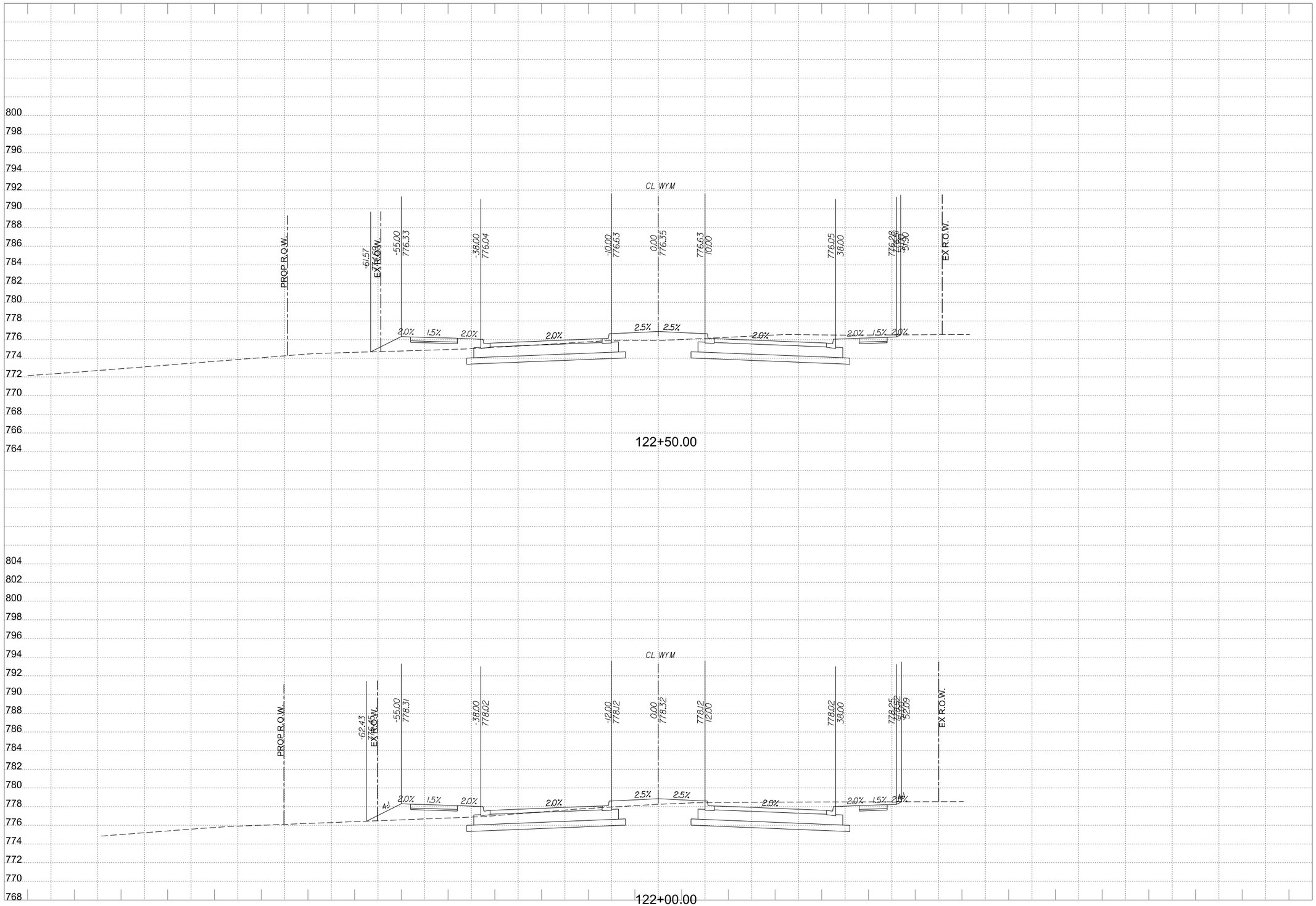

WYOMING SPRINGS
SEGMENT 1
Round Rock, Texas

HALFF
9500 AMBERGLEN BLVD
BLDG F, STE 125
AUSTIN, TX 78729
TEL (512) 777-4600
FAX (512) 252-8141

Revision No.	Date	Description

FOR INFORMATION ONLY

CROSS SECTIONS SHOULD NOT BE USED FOR CONSTRUCTION PURPOSES. REFER TO INFORMATION IN CONSTRUCTION PLANS.

0 5 10 15 20
HORIZONTAL SCALE IN FEET

0 5 10
VERTICAL SCALE IN FEET

Project No.:	36179
Issued:	4/14/2023
Drawn By:	JP
Checked By:	JN
Scale:	AS NOTED

Sheet Title

PROPOSED CROSS SECTIONS

516

Sheet Number

Design PDF_2D_MON_HW_MR_300.plt
4/14/2023 3:29:34 PM ah3914 HALFF W:\AUS\36000s\36179002\CADD\Sheets\AUSWXS-SHEETS-36179.dgn

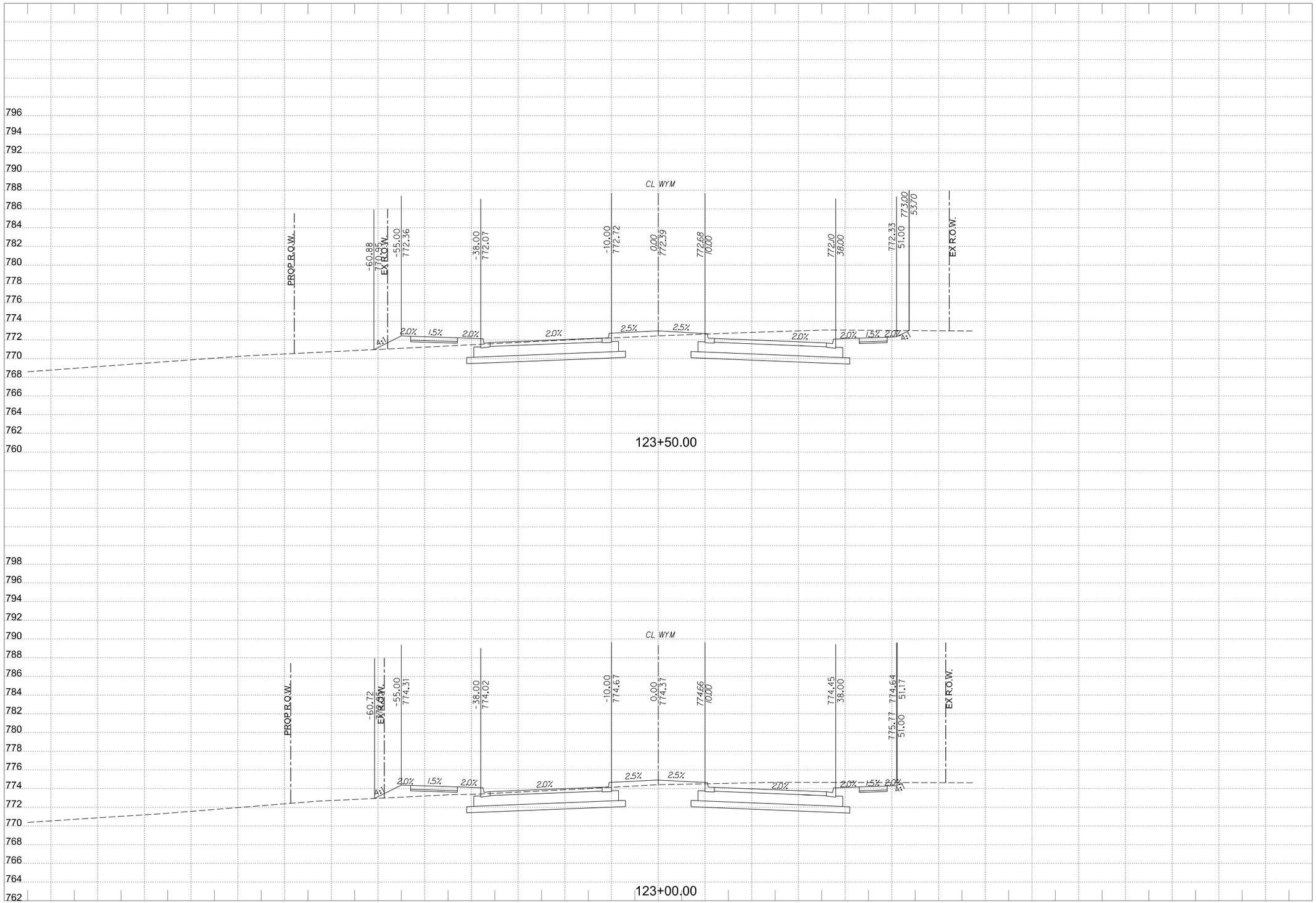

WYOMING SPRINGS
SEGMENT 1
Round Rock, Texas

HALFF
9500 AMBERGLEN BLVD
BLDG F, STE 125
AUSTIN, TX 78729
TEL (512) 777-4600
FAX (512) 252-8141

Revision No.	Date	Description

FOR INFORMATION ONLY

CROSS SECTIONS SHOULD NOT BE USED FOR CONSTRUCTION PURPOSES. REFER TO INFORMATION IN CONSTRUCTION PLANS.

0 5 10 15 20
HORIZONTAL SCALE IN FEET

0 5 10
VERTICAL SCALE IN FEET

Project No.:	36179
Issued:	4/14/2023
Drawn By:	JP
Checked By:	JN
Scale:	AS NOTED

Sheet Title
PROPOSED CROSS SECTIONS

517
Sheet Number

Design PDF_2D_MON_HW_MR_300.plt
4/14/2023 3:29:35 PM ah3914 HALFF W:\AUS\36000s\36179002\CADD\Sheets\AUSWXS-SHEETS-36179.dgn

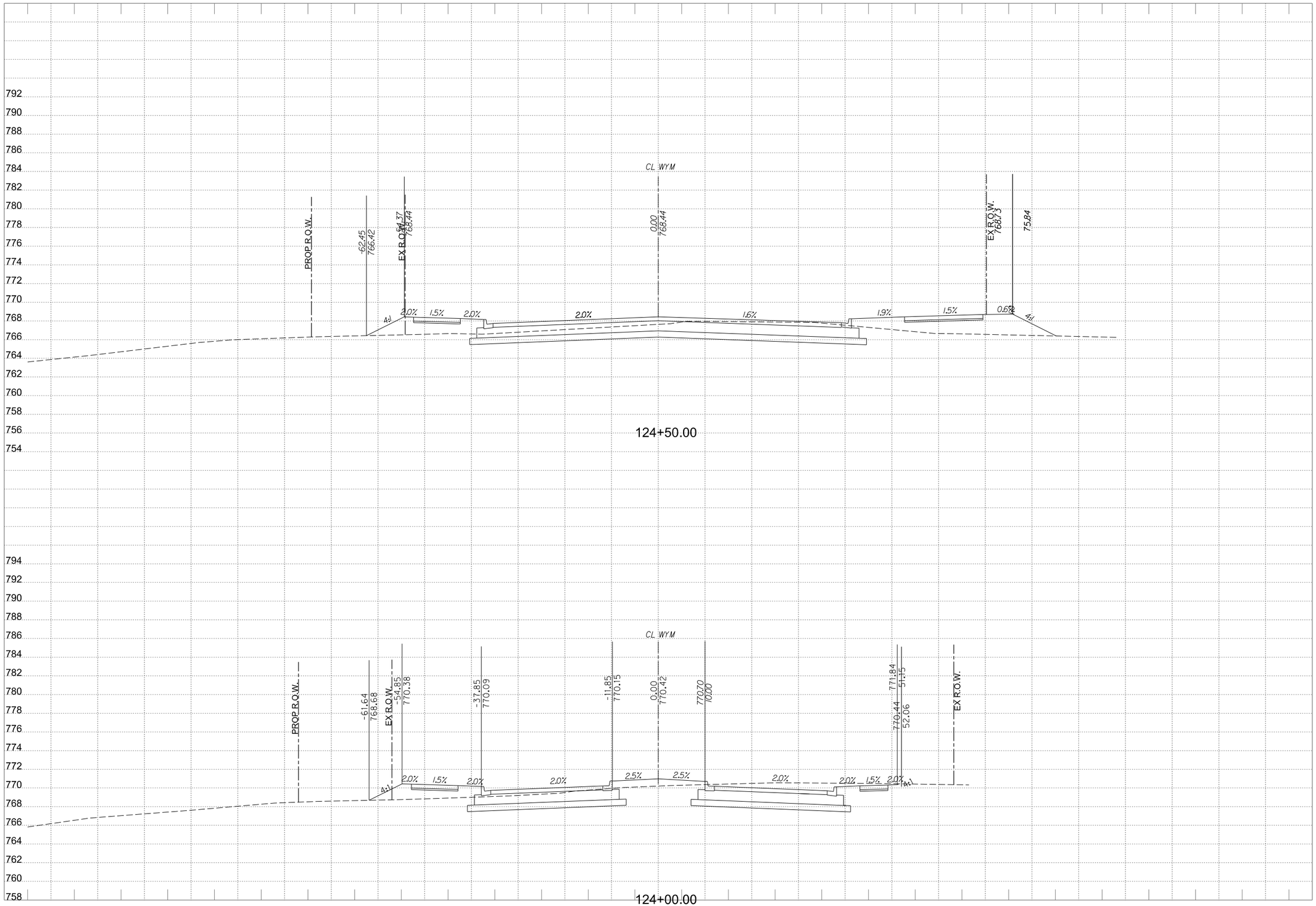

WYOMING SPRINGS
SEGMENT 1
Round Rock, Texas

HALFF
9500 AMBERGLEN BLVD
BLDG F, STE 125
AUSTIN, TX 78729
TEL (512) 777-4600
FAX (512) 252-8141

Revision No.	Date	Description
.	.	.
.	.	.
.	.	.
.	.	.
.	.	.
.	.	.
.	.	.
.	.	.

FOR INFORMATION ONLY

CROSS SECTIONS SHOULD NOT BE USED FOR CONSTRUCTION PURPOSES. REFER TO INFORMATION IN CONSTRUCTION PLANS.

0 5 10 15 20
HORIZONTAL SCALE IN FEET

0 5 10
VERTICAL SCALE IN FEET

Project No.:	36179
Issued:	4/14/2023
Drawn By:	JP
Checked By:	JN
Scale:	AS NOTED

Sheet Title

PROPOSED
CROSS SECTIONS

518

Sheet Number

Design PDF_2D_MON_HW_MR_300.plt
4/14/2023 3:29:36 PM ah3914 HALFF W:\AUS\36000s\36179\0022\CADD\Sheets\AUSWXS-SHEETS-36179.dgn

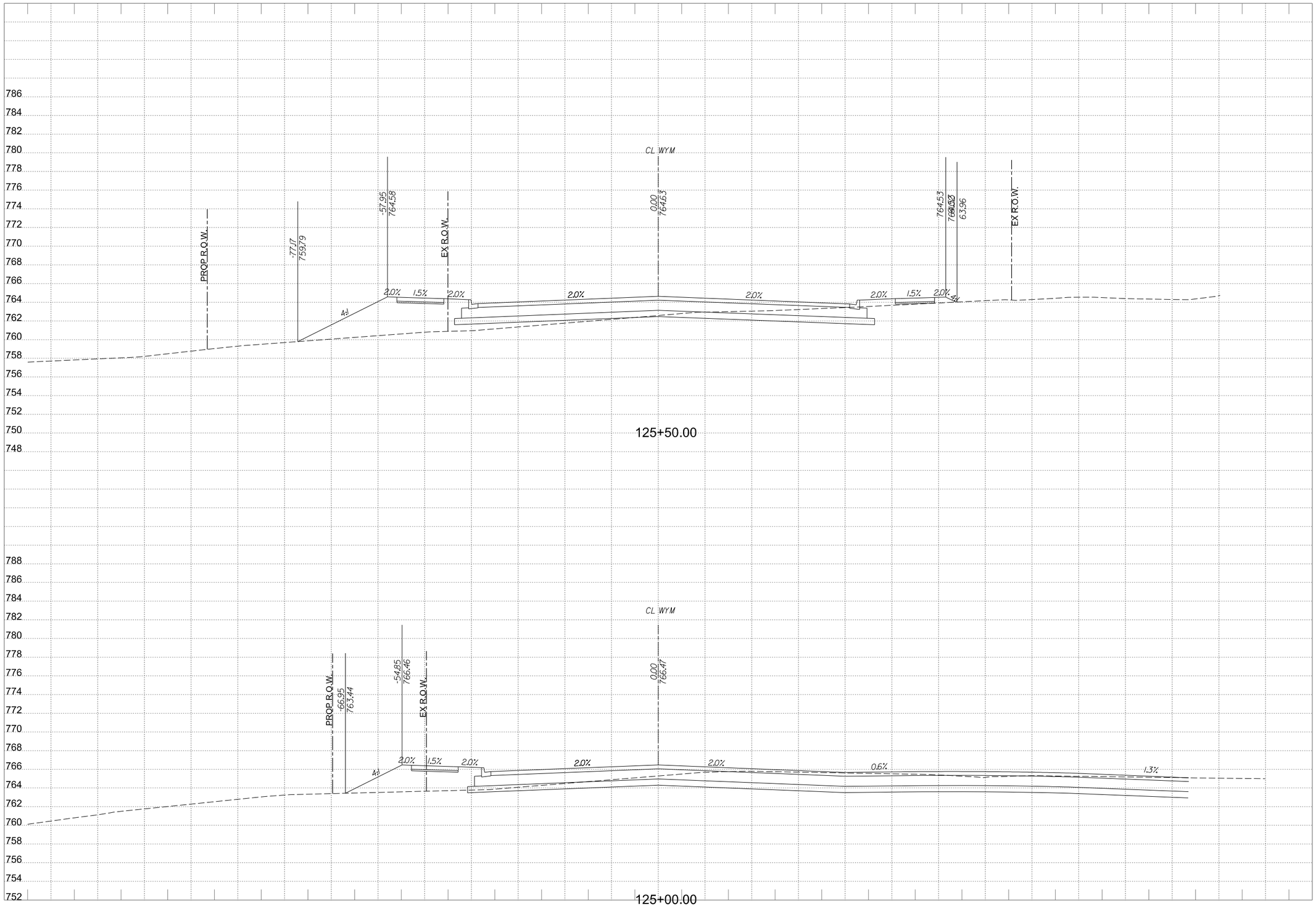

WYOMING SPRINGS
SEGMENT 1
Round Rock, Texas

HALFF
9500 AMBERGLEN BLVD
BLDG F, STE 125
AUSTIN, TX 78729
TEL (512) 777-4600
FAX (512) 252-8141

Revision No.	Date	Description

FOR INFORMATION ONLY

CROSS SECTIONS SHOULD NOT BE USED FOR CONSTRUCTION PURPOSES. REFER TO INFORMATION IN CONSTRUCTION PLANS.

0 5 10 15 20
HORIZONTAL SCALE IN FEET

0 5 10
VERTICAL SCALE IN FEET

Project No.:	36179
Issued:	4/14/2023
Drawn By:	JP
Checked By:	JN
Scale:	AS NOTED

Sheet Title
PROPOSED CROSS SECTIONS

519
Sheet Number

Design PDF_2D_MON_HW_MR_300.plt
4/14/2023 3:29:37 PM ah3914 HALFF W:\AUS\36000s\36179002\CADD\Sheets\AUSWXS-SHEETS-36179.dgn

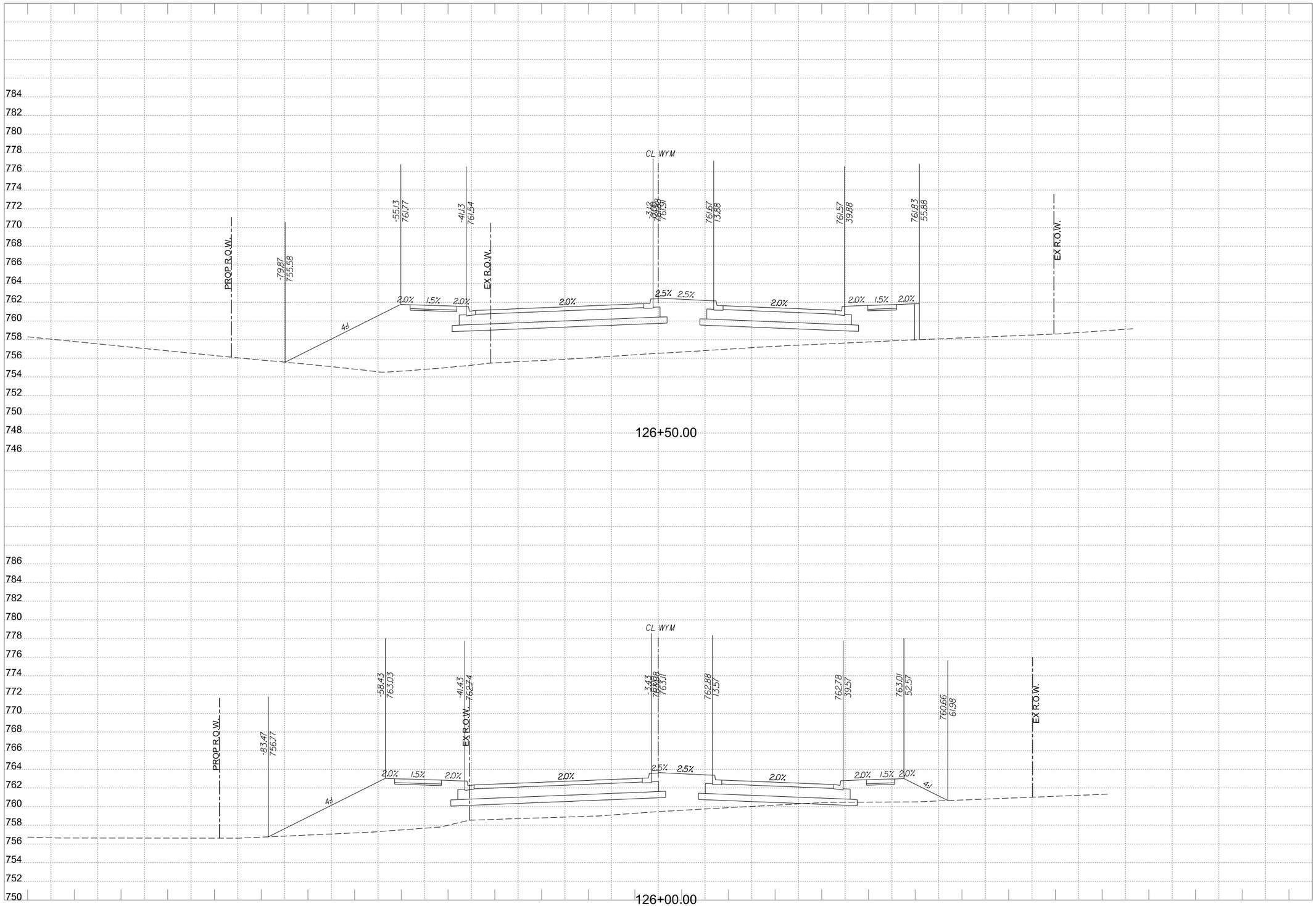

PDF_2D_MON_HW_MR_300.plt

Design

4/14/2023 3:29:39 PM ah3914 HALFF W:\AUS\36000s\36179002\CADD\Sheets\AUSWXS-SHEETS-36179.dgn

WYOMING SPRINGS

SEGMENT 1

Round Rock, Texas

HALFF

9500 AMBERGLEN BLVD
BLDG F, STE 125
AUSTIN, TX 78729
TEL (512) 777-4600
FAX (512) 252-8141

Revision No.	Date	Description

FOR INFORMATION ONLY

CROSS SECTIONS SHOULD NOT BE USED FOR CONSTRUCTION PURPOSES. REFER TO INFORMATION IN CONSTRUCTION PLANS.

0 5 10 15 20
HORIZONTAL SCALE IN FEET

0 5 10
VERTICAL SCALE IN FEET

Project No.:	36179
Issued:	4/14/2023
Drawn By:	JP
Checked By:	JN
Scale:	AS NOTED

Sheet Title

PROPOSED CROSS SECTIONS

520

Sheet Number

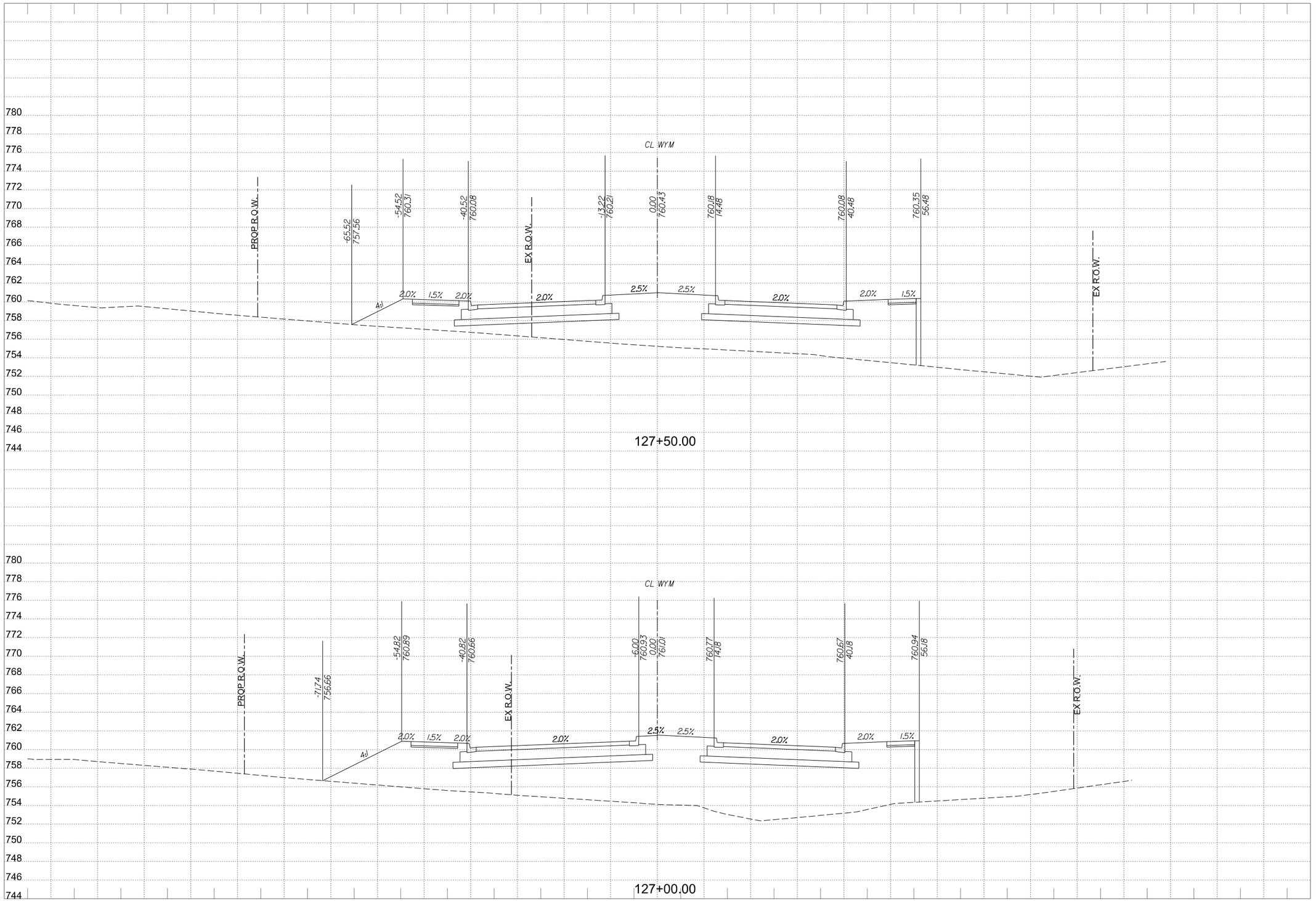

PDF_2D_MON_HW_MR_300.plt

Design

W:\AUS\36000s\36179002\CADD\Sheets\AUS\XS-SHEETS-36179.dgn

4/14/2023 3:29:40 PM ah3914 HALFF

WYOMING SPRINGS

SEGMENT 1

Round Rock, Texas

HALFF

9500 AMBERGLEN BLVD
BLDG F, STE 125
AUSTIN, TX 78729
TEL (512) 777-4600
FAX (512) 252-8141

Revision No.	Date	Description

FOR INFORMATION ONLY

CROSS SECTIONS SHOULD NOT BE USED FOR CONSTRUCTION PURPOSES. REFER TO INFORMATION IN CONSTRUCTION PLANS.

0 5 10 15 20
HORIZONTAL SCALE IN FEET

0 5 10
VERTICAL SCALE IN FEET

Project No.:	36179
Issued:	4/14/2023
Drawn By:	JP
Checked By:	JN
Scale:	AS NOTED

Sheet Title

PROPOSED CROSS SECTIONS

521

Sheet Number

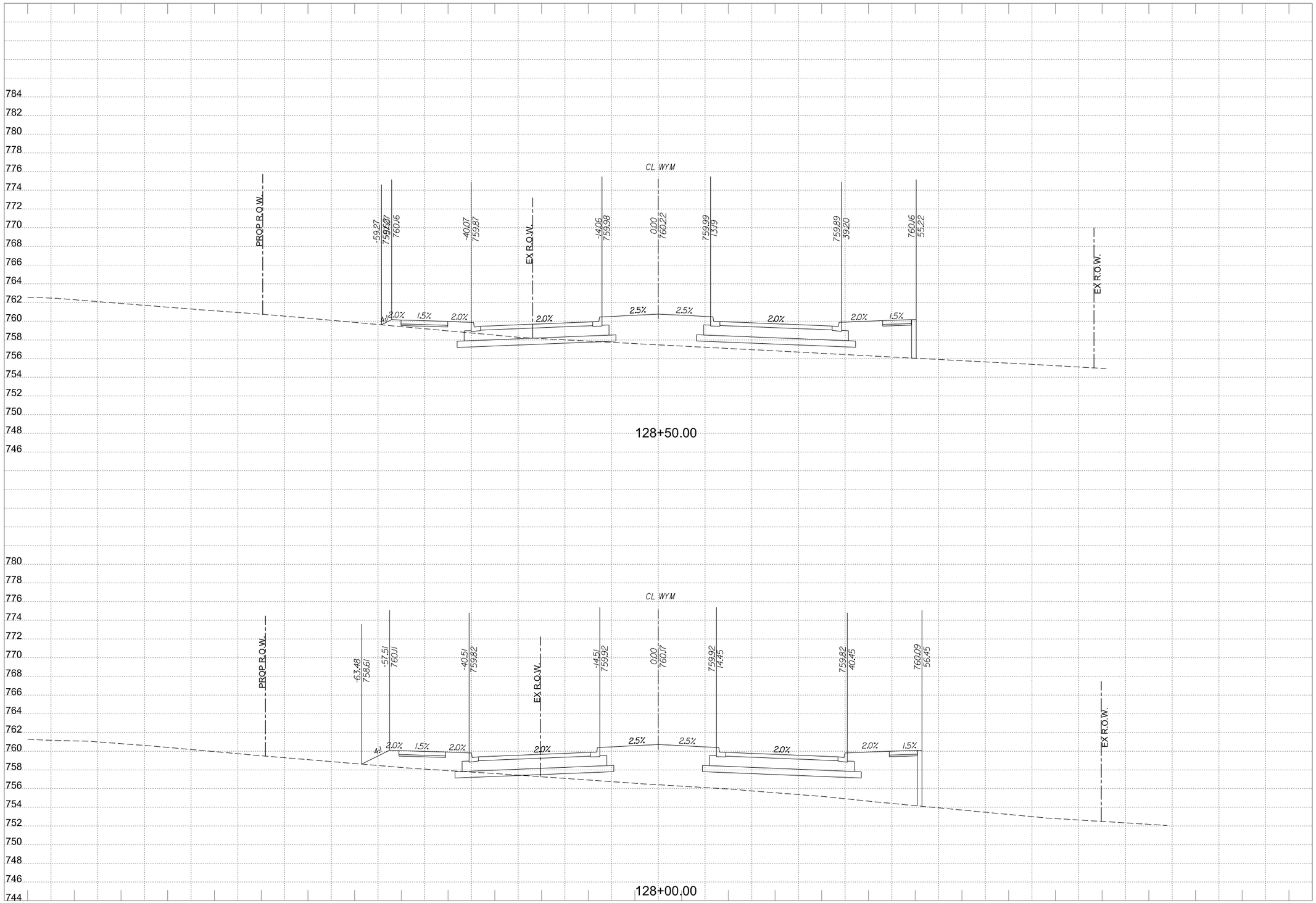

Design PDF_2D_MON_HW_MR_300.plt
4/14/2023 3:29:41 PM ah3914 HALFF W:\AUS\36000s\36179002\CADD\Sheets\AUSWXS-SHEETS-36179.dgn

WYOMING SPRINGS
SEGMENT 1
Round Rock, Texas

HALFF
9500 AMBERGLEN BLVD
BLDG F, STE 125
AUSTIN, TX 78729
TEL (512) 777-4600
FAX (512) 252-8141

Revision No.	Date	Description

FOR INFORMATION ONLY

CROSS SECTIONS SHOULD NOT BE USED FOR CONSTRUCTION PURPOSES. REFER TO INFORMATION IN CONSTRUCTION PLANS.

0 5 10 15 20
HORIZONTAL SCALE IN FEET
0 5 10
VERTICAL SCALE IN FEET

Project No.:	36179
Issued:	4/14/2023
Drawn By:	JP
Checked By:	JN
Scale:	AS NOTED

Sheet Title
PROPOSED CROSS SECTIONS

522
Sheet Number

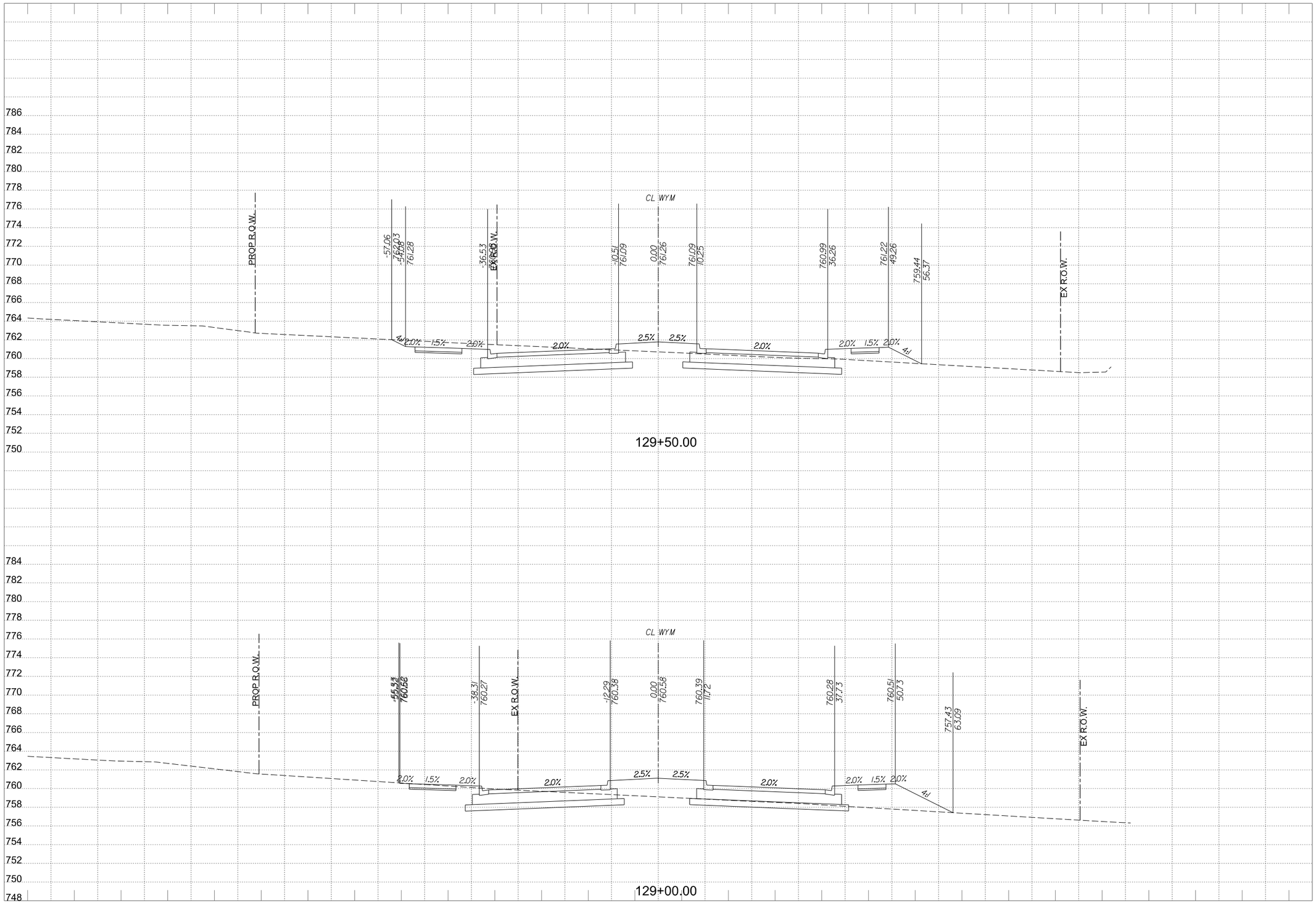

WYOMING SPRINGS
SEGMENT 1
Round Rock, Texas

HALFF
9500 AMBERGLEN BLVD
BLDG F, STE 125
AUSTIN, TX 78729
TEL (512) 777-4600
FAX (512) 252-8141

Revision No.	Date	Description

FOR INFORMATION ONLY

CROSS SECTIONS SHOULD NOT BE USED FOR CONSTRUCTION PURPOSES. REFER TO INFORMATION IN CONSTRUCTION PLANS.

0 5 10 15 20
HORIZONTAL SCALE IN FEET

0 5 10
VERTICAL SCALE IN FEET

Project No.:	36179
Issued:	4/14/2023
Drawn By:	JP
Checked By:	JN
Scale:	AS NOTED

Sheet Title
PROPOSED CROSS SECTIONS

523
Sheet Number

Design
PDF_2D_MON_HW_MR_300.plt
W:\AUS\36000s\36179002\CADD\Sheets\AUSWXS-SHEETS-36179.dgn
ah3914 HALFF
4/14/2023 3:29:42 PM

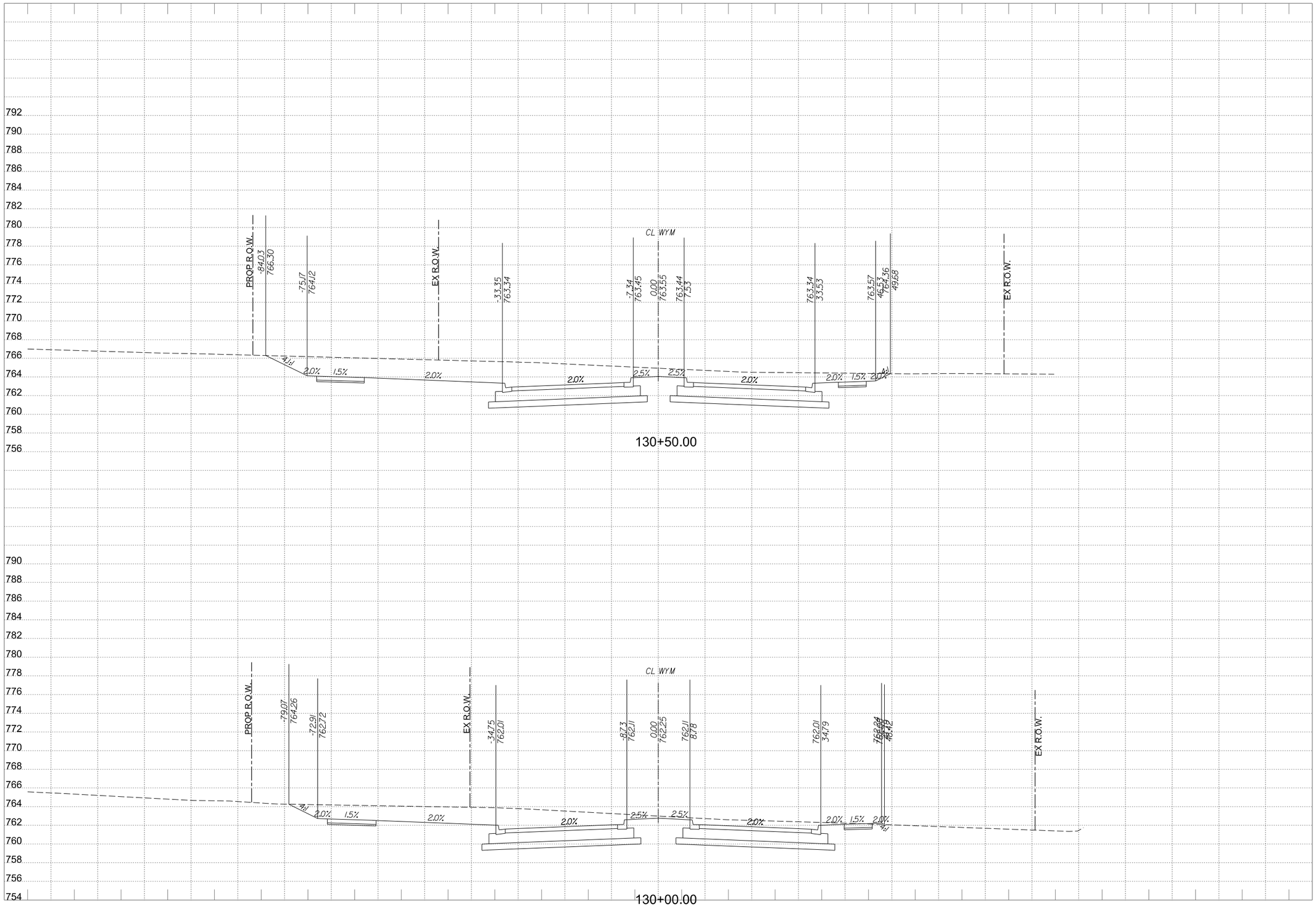

WYOMING SPRINGS
SEGMENT 1
Round Rock, Texas

HALFF
9500 AMBERGLEN BLVD
BLDG F, STE 125
AUSTIN, TX 78729
TEL (512) 777-4600
FAX (512) 252-8141

Revision No.	Date	Description

FOR INFORMATION ONLY

CROSS SECTIONS SHOULD NOT BE USED FOR CONSTRUCTION PURPOSES. REFER TO INFORMATION IN CONSTRUCTION PLANS.

0 5 10 15 20
HORIZONTAL SCALE IN FEET

0 5 10
VERTICAL SCALE IN FEET

Project No.:	36179
Issued:	4/14/2023
Drawn By:	JP
Checked By:	JN
Scale:	AS NOTED

Sheet Title
PROPOSED CROSS SECTIONS

524
Sheet Number

Design
PDF_2D_MON_HW_MR_300.plt
4/14/2023 3:29:44 PM ah3914 HALFF W:\AUS\36000s\36179\002\CADD\Sheets\AUSWXS-SHEETS-36179.dgn

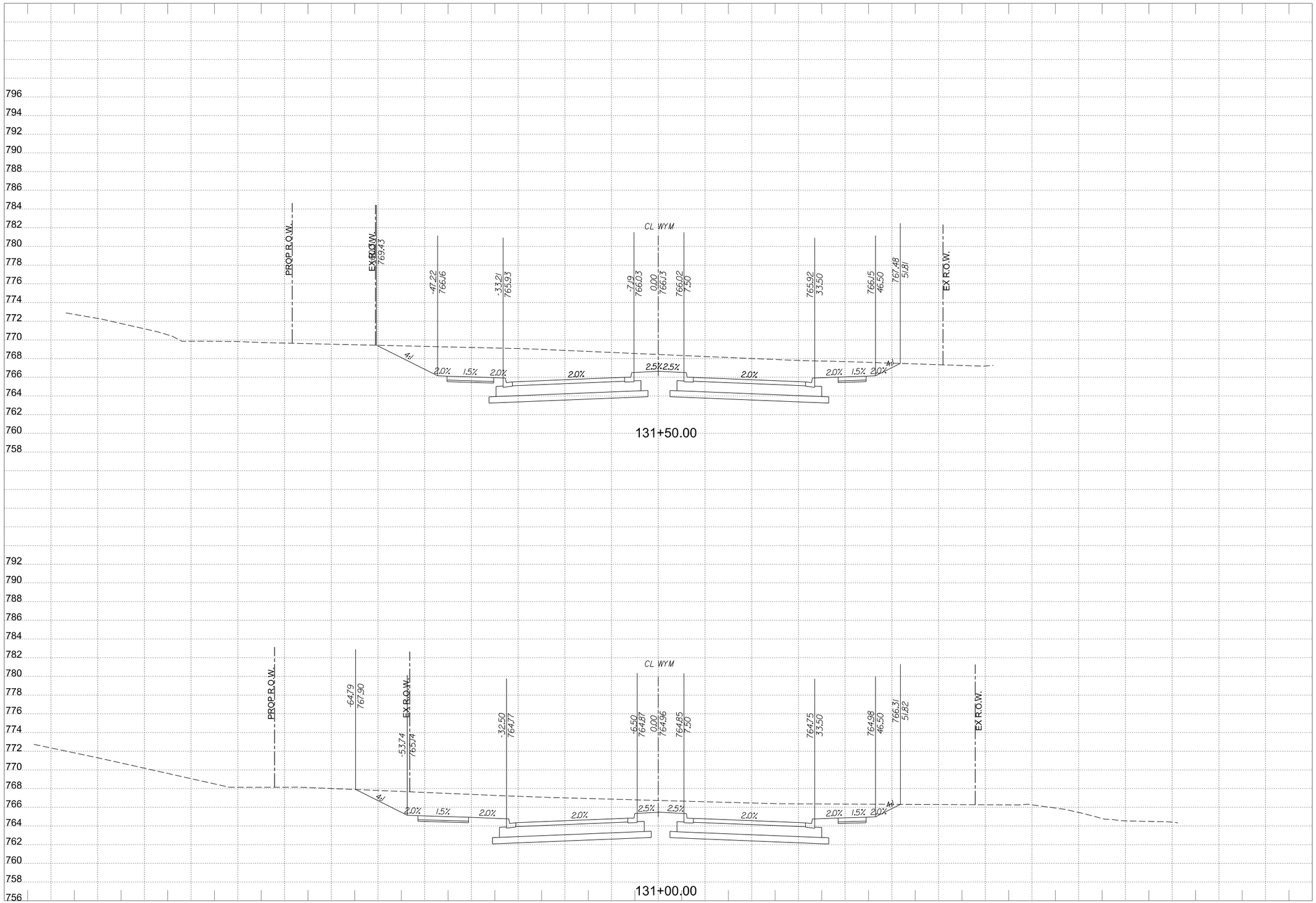

WYOMING SPRINGS
SEGMENT 1
Round Rock, Texas

HALFF
9500 AMBERGLEN BLVD
BLDG F, STE 125
AUSTIN, TX 78729
TEL (512) 777-4600
FAX (512) 252-8141

Revision No.	Date	Description

FOR INFORMATION ONLY

CROSS SECTIONS SHOULD NOT BE USED FOR CONSTRUCTION PURPOSES. REFER TO INFORMATION IN CONSTRUCTION PLANS.

0 5 10 15 20
HORIZONTAL SCALE IN FEET

0 5 10
VERTICAL SCALE IN FEET

Project No.:	36179
Issued:	4/14/2023
Drawn By:	JP
Checked By:	JN
Scale:	AS NOTED

Sheet Title
PROPOSED CROSS SECTIONS

525
Sheet Number

Design
PDF_2D_MON_HW_MR_300.plt
W:\AUS\36000s\36179002\CADD\Sheets\AUS\XS-SHEETS-36179.dgn
ah3914 HALFF
4/14/2023 3:29:45 PM

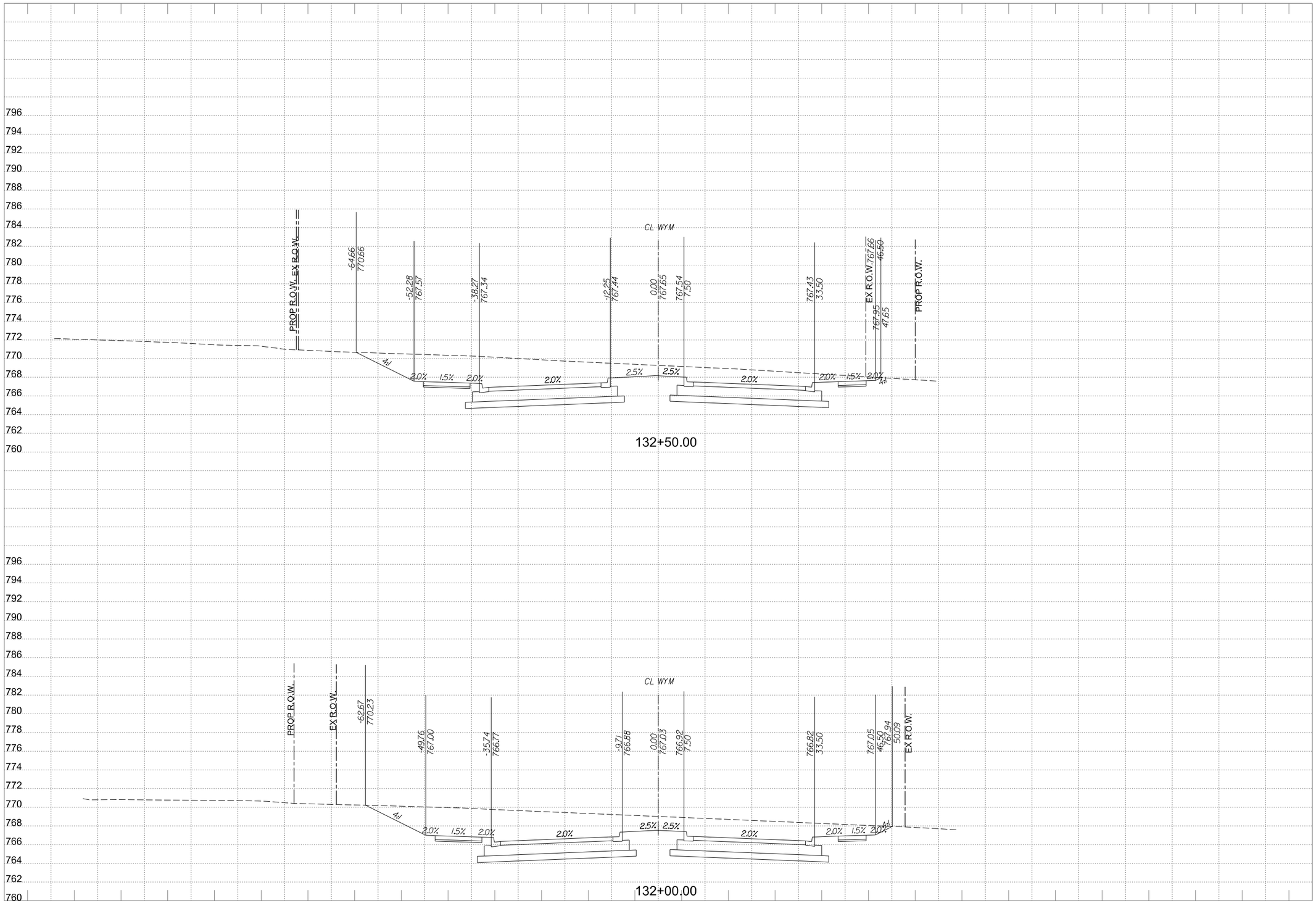

Design PDF_2D_MON_HW_MR_300.plt

4/14/2023 3:29:46 PM ah3914 HALFF W:\AUS\36000s\36179002\CADD\Sheets\AUS\XS-SHEETS-36179.dgn

WYOMING SPRINGS

SEGMENT 1

Round Rock, Texas

HALFF
9500 AMBERGLEN BLVD
BLDG F, STE 125
AUSTIN, TX 78729
TEL (512) 777-4600
FAX (512) 252-8141

Revision No.	Date	Description

FOR INFORMATION ONLY

CROSS SECTIONS SHOULD NOT BE USED FOR CONSTRUCTION PURPOSES. REFER TO INFORMATION IN CONSTRUCTION PLANS.

0 5 10 15 20
HORIZONTAL SCALE IN FEET

0 5 10
VERTICAL SCALE IN FEET

Project No.:	36179
Issued:	4/14/2023
Drawn By:	JP
Checked By:	JN
Scale:	AS NOTED

Sheet Title

PROPOSED CROSS SECTIONS

526

Sheet Number

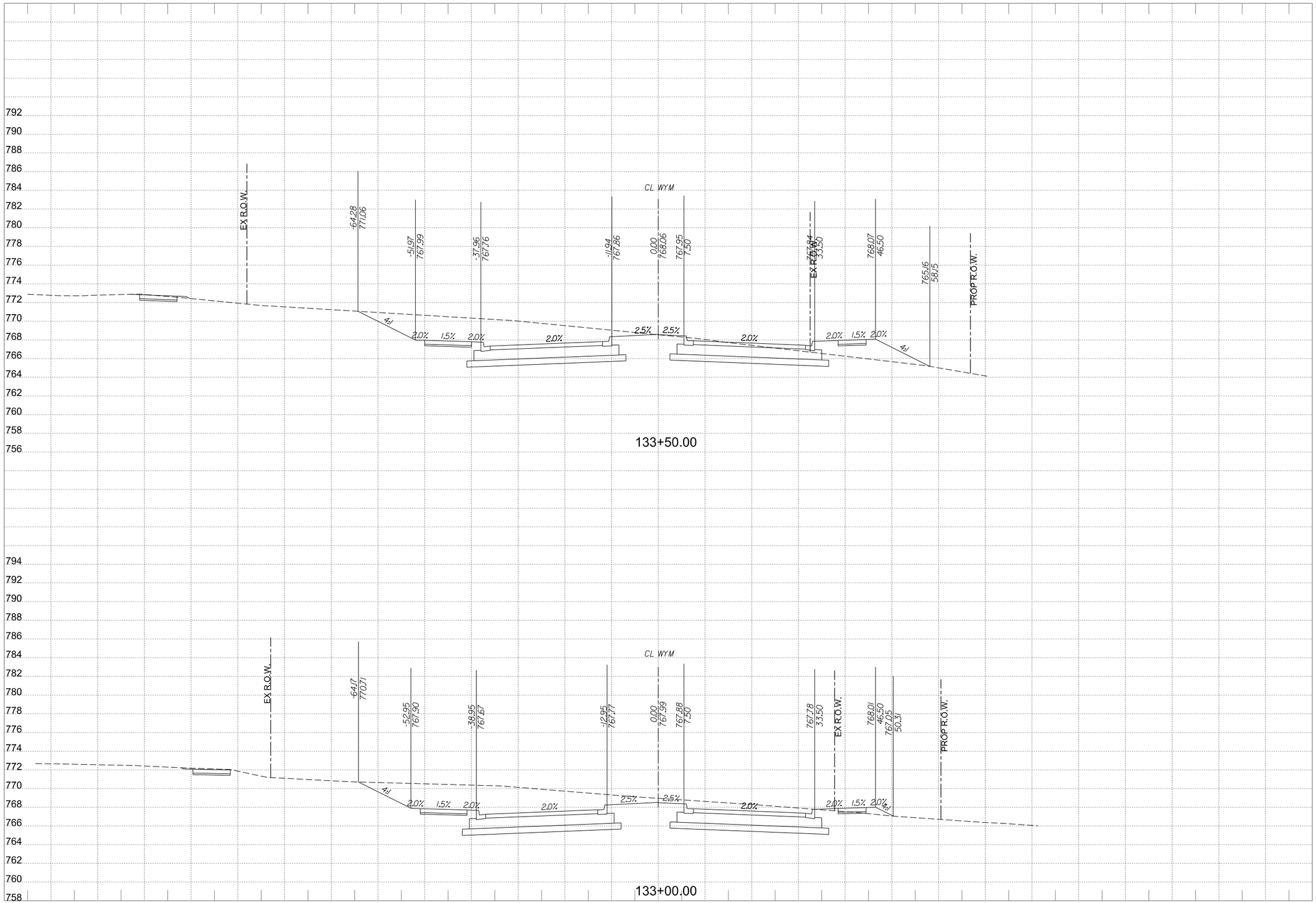

WYOMING SPRINGS
SEGMENT 1
Round Rock, Texas

HALFF
9500 AMBERGLEN BLVD
BLDG F, STE 125
AUSTIN, TX 78729
TEL (512) 777-4600
FAX (512) 252-8141

Revision No.	Date	Description

FOR INFORMATION ONLY

CROSS SECTIONS SHOULD NOT BE USED FOR CONSTRUCTION PURPOSES. REFER TO INFORMATION IN CONSTRUCTION PLANS.

0 5 10 15 20
HORIZONTAL SCALE IN FEET

0 5 10
VERTICAL SCALE IN FEET

Project No.:	36179
Issued:	4/14/2023
Drawn By:	JP
Checked By:	JN
Scale:	AS NOTED

Sheet Title
PROPOSED CROSS SECTIONS

527
Sheet Number

Design
PDF_2D_MON_HW_MR_300.plt
4/14/2023 3:29:47 PM ah3914 HALFF W:\AUS\36000s\36179\002\CADD\Sheets\AUSXS-SHEETS-36179.dgn

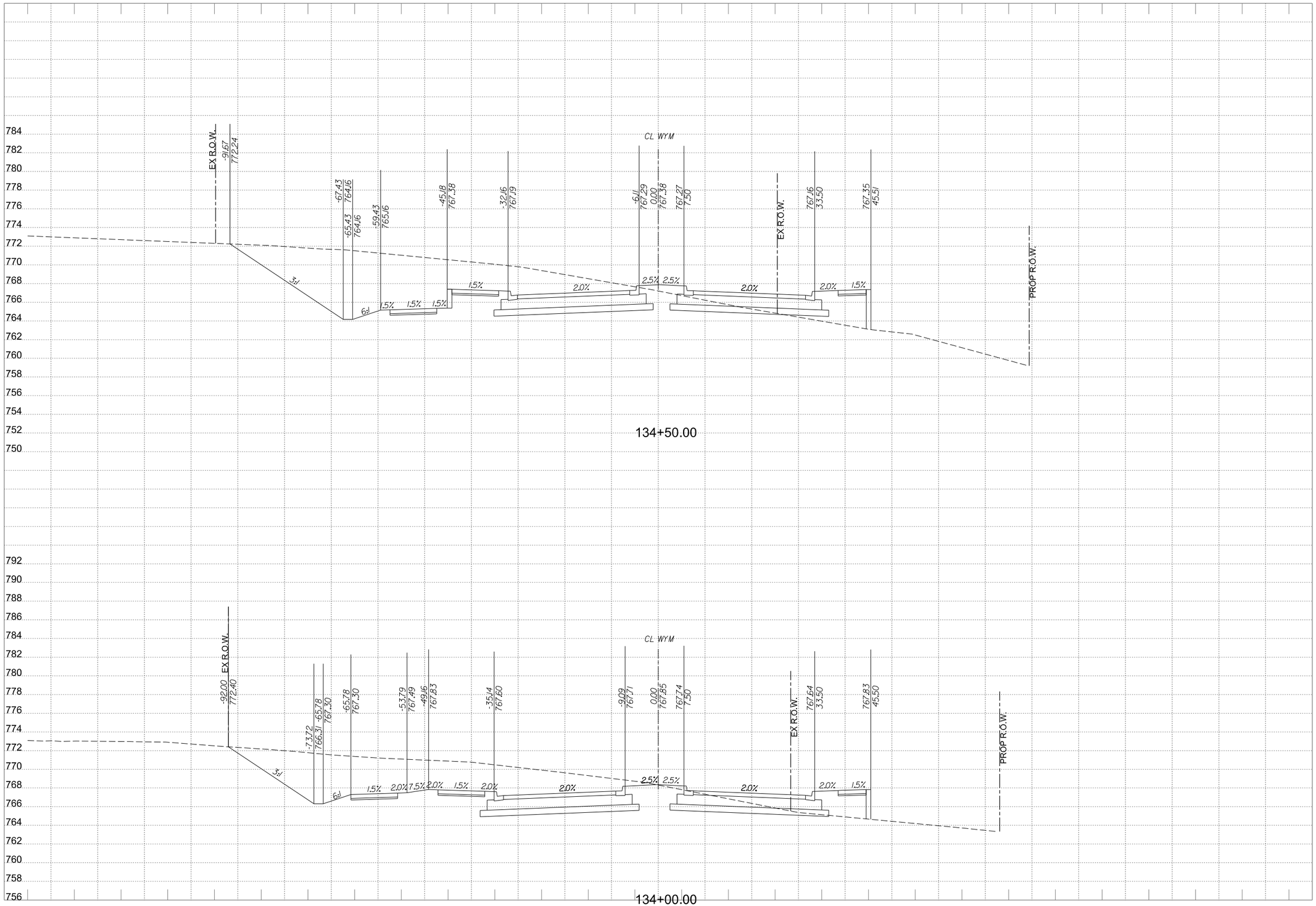

PDF_2D_MON_HW_MR_300.plt
Design
W:\AUS\36000s\36179002\CADD\Sheets\AUSWXS-SHEETS-36179.dgn
4/14/2023 3:29:48 PM ah3914 HALFF

WYOMING SPRINGS

SEGMENT 1
Round Rock, Texas

HALFF
9500 AMBERGLEN BLVD
BLDG F, STE 125
AUSTIN, TX 78729
TEL (512) 777-4600
FAX (512) 252-8141

Revision No.	Date	Description

FOR INFORMATION ONLY

CROSS SECTIONS SHOULD NOT BE USED FOR CONSTRUCTION PURPOSES. REFER TO INFORMATION IN CONSTRUCTION PLANS.

0 5 10 15 20
HORIZONTAL SCALE IN FEET

0 5 10
VERTICAL SCALE IN FEET

Project No.:	36179
Issued:	4/14/2023
Drawn By:	JP
Checked By:	JN
Scale:	AS NOTED

Sheet Title

PROPOSED
CROSS SECTIONS

528

Sheet Number

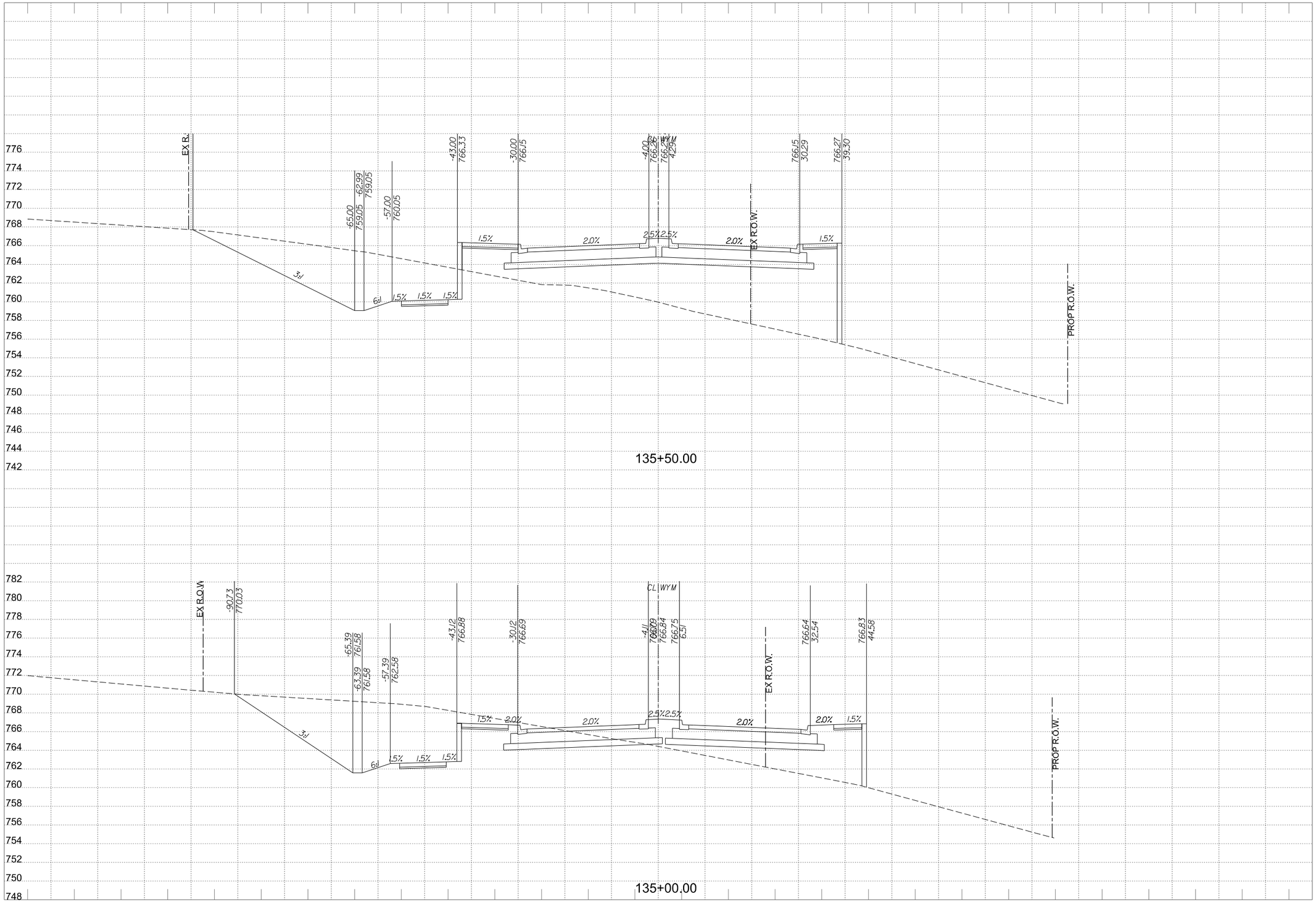

WYOMING SPRINGS
SEGMENT 1
Round Rock, Texas

HALFF
9500 AMBERGLEN BLVD
BLDG F, STE 125
AUSTIN, TX 78729
TEL (512) 777-4600
FAX (512) 252-8141

Revision No.	Date	Description
.	.	.
.	.	.
.	.	.
.	.	.
.	.	.
.	.	.
.	.	.
.	.	.

FOR INFORMATION ONLY

CROSS SECTIONS SHOULD NOT BE USED FOR CONSTRUCTION PURPOSES. REFER TO INFORMATION IN CONSTRUCTION PLANS.

0 5 10 15 20
HORIZONTAL SCALE IN FEET

0 5 10
VERTICAL SCALE IN FEET

Project No.:	36179
Issued:	4/14/2023
Drawn By:	JP
Checked By:	JN
Scale:	AS NOTED

Sheet Title
PROPOSED CROSS SECTIONS

529
Sheet Number

Design PDF_2D_MON_HW_MR_300.plt
4/14/2023 3:29:50 PM ah3914 HALFF W:\AUS\36000s\36179002\CADD\Sheets\AUSWXS-SHEETS-36179.dgn

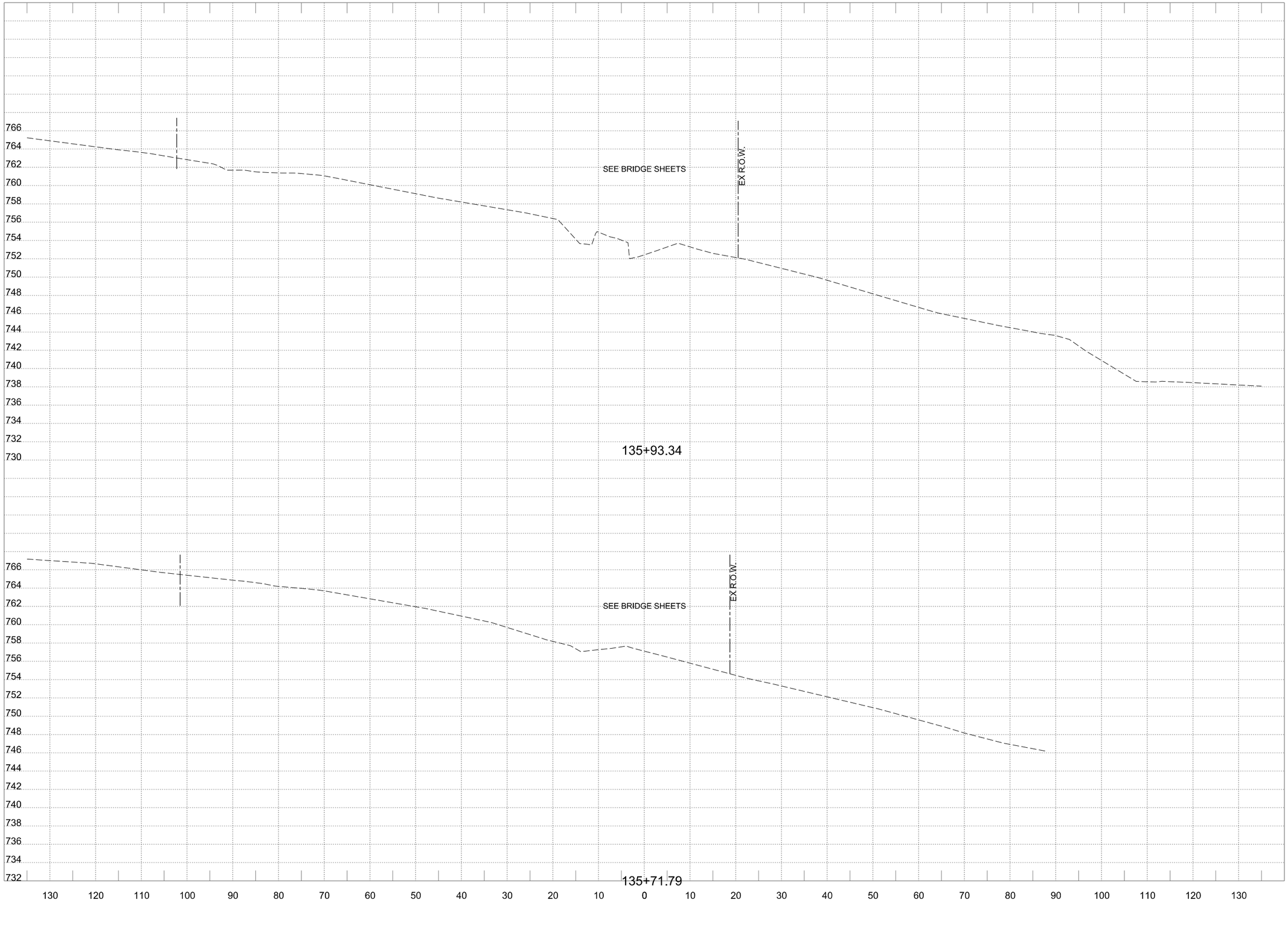

PDF_2D_MON_HW_MR_300.plt
Design
4/14/2023 3:29:51 PM ah3914 HALFF W:\AUS\36000s\36179\0022\CADD\Sheets\AUSVXS-SHEETS-36179.dgn

WYOMING SPRINGS

SEGMENT 1

Round Rock, Texas

HALFF

9500 AMBERGLEN BLVD
BLDG F, STE 125
AUSTIN, TX 78729
TEL (512) 777-4600
FAX (512) 252-8141

Revision No.	Date	Description
.	.	.
.	.	.
.	.	.
.	.	.
.	.	.
.	.	.
.	.	.
.	.	.

FOR INFORMATION ONLY

CROSS SECTIONS SHOULD NOT BE USED FOR CONSTRUCTION PURPOSES. REFER TO INFORMATION IN CONSTRUCTION PLANS.

0 5 10 15 20
HORIZONTAL SCALE IN FEET

0 5 10
VERTICAL SCALE IN FEET

Project No.:	36179
Issued:	4/14/2023
Drawn By:	JP
Checked By:	JN
Scale:	AS NOTED

Sheet Title

PROPOSED CROSS SECTIONS

530

Sheet Number



Design PDF_2D_MON_HW_MR_300.plt

4/14/2023 3:29:52 PM ah3914 HALFF W:\AUS\36000s\36179\0022\CADD\Sheets\AUSWXS-SHEETS-36179.dgn

WYOMING SPRINGS

SEGMENT 1

Round Rock, Texas

HALFF
9500 AMBERGLEN BLVD
BLDG F, STE 125
AUSTIN, TX 78729
TEL (512) 777-4600
FAX (512) 252-8141

Revision No.	Date	Description

FOR INFORMATION ONLY

CROSS SECTIONS SHOULD NOT BE USED FOR CONSTRUCTION PURPOSES. REFER TO INFORMATION IN CONSTRUCTION PLANS.

0 5 10 15 20
HORIZONTAL SCALE IN FEET

0 5 10
VERTICAL SCALE IN FEET

Project No.:	36179
Issued:	4/14/2023
Drawn By:	JP
Checked By:	JN
Scale:	AS NOTED

Sheet Title

PROPOSED CROSS SECTIONS

531

Sheet Number

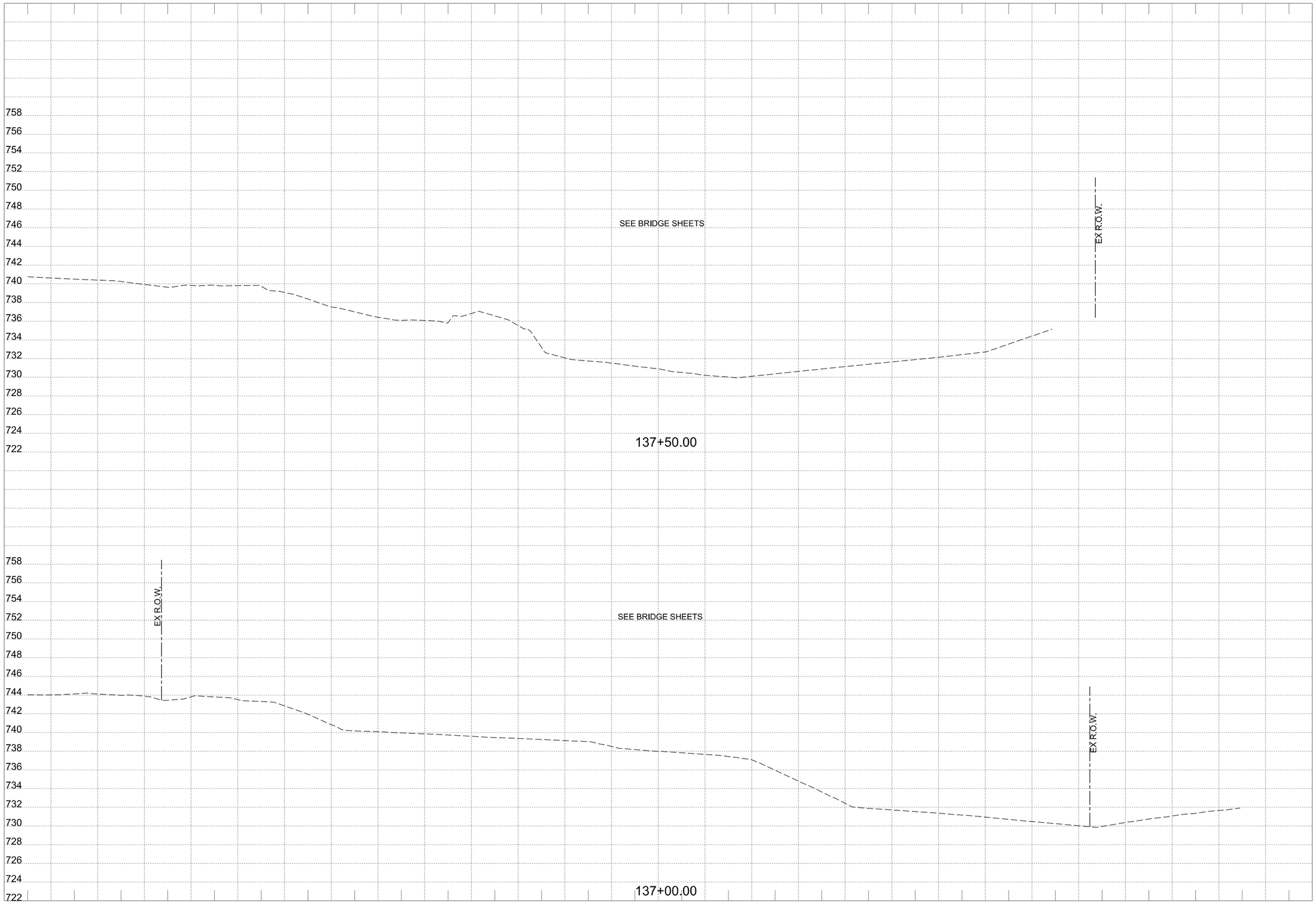

WYOMING SPRINGS

SEGMENT 1

Round Rock, Texas

HALFF

9500 AMBERGLEN BLVD
BLDG F, STE 125
AUSTIN, TX 78729
TEL (512) 777-4600
FAX (512) 252-8141

Revision No.	Date	Description

FOR INFORMATION ONLY

CROSS SECTIONS SHOULD NOT BE USED FOR CONSTRUCTION PURPOSES. REFER TO INFORMATION IN CONSTRUCTION PLANS.

0 5 10 15 20
HORIZONTAL SCALE IN FEET

0 5 10
VERTICAL SCALE IN FEET

Project No.:	36179
Issued:	4/14/2023
Drawn By:	JP
Checked By:	JN
Scale:	AS NOTED

Sheet Title

PROPOSED CROSS SECTIONS

532

Sheet Number

Design PDF_2D_MON_HW_MR_300.plt
4/14/2023 3:29:53 PM ah3914 HALFF W:\AUS\36000s\36179\0022\CADD\Sheets\AUSWXS-SHEETS-36179.dgn

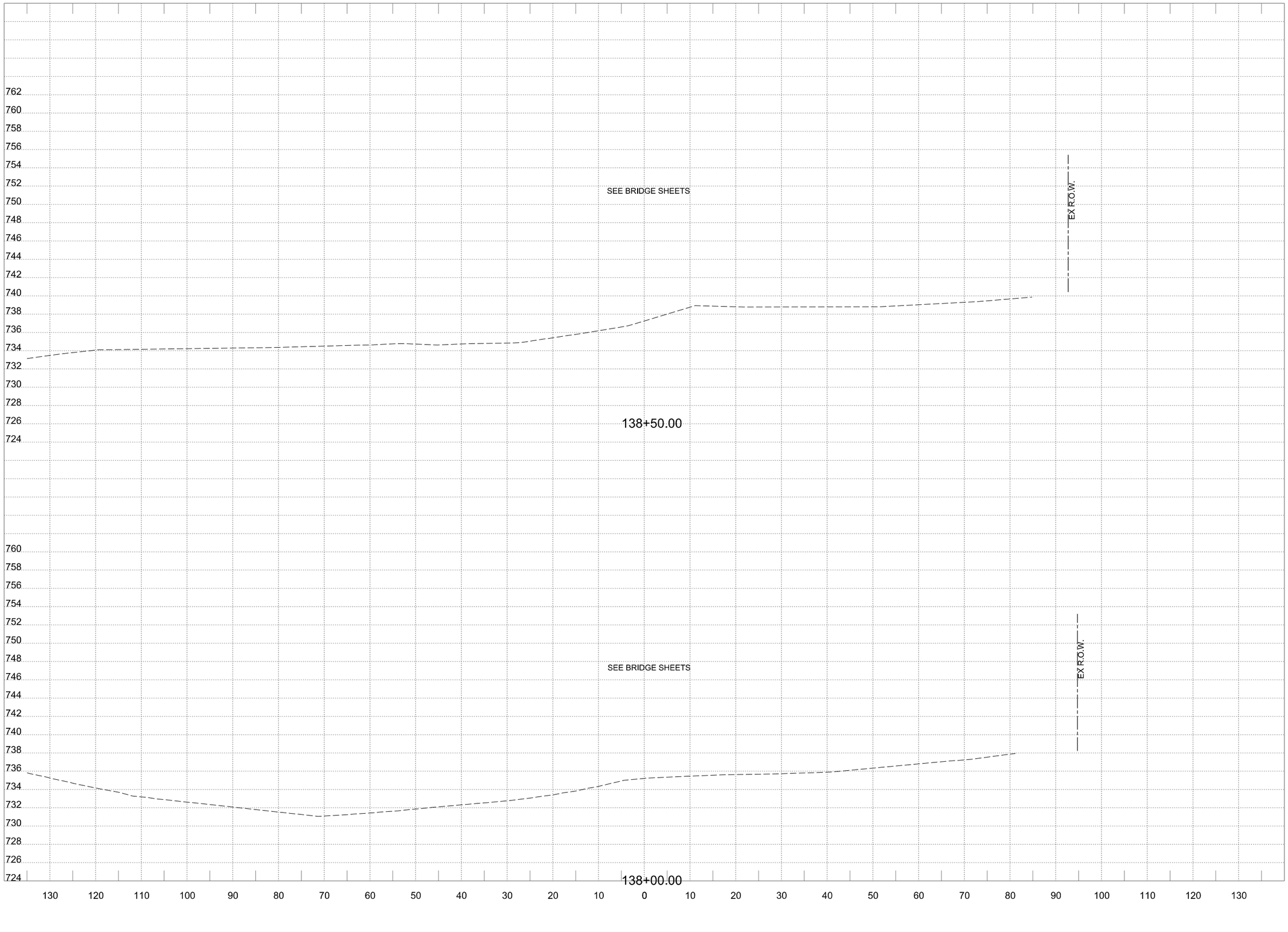

PDF_2D_MON_HW_MR_300.plt
Design
4/14/2023 3:29:55 PM ah3914 HALFF W:\AUS\36000s\36179\002\CADD\Sheets\AUSWXS-SHEETS-36179.dgn

WYOMING SPRINGS
SEGMENT 1
Round Rock, Texas

HALFF
9500 AMBERGLEN BLVD
BLDG F, STE 125
AUSTIN, TX 78729
TEL (512) 777-4600
FAX (512) 252-8141

Revision No.	Date	Description

FOR INFORMATION ONLY

CROSS SECTIONS SHOULD NOT BE USED FOR CONSTRUCTION PURPOSES. REFER TO INFORMATION IN CONSTRUCTION PLANS.

0 5 10 15 20
HORIZONTAL SCALE IN FEET

0 5 10
VERTICAL SCALE IN FEET

Project No.:	36179
Issued:	4/14/2023
Drawn By:	JP
Checked By:	JN
Scale:	AS NOTED

Sheet Title
PROPOSED CROSS SECTIONS

533
Sheet Number

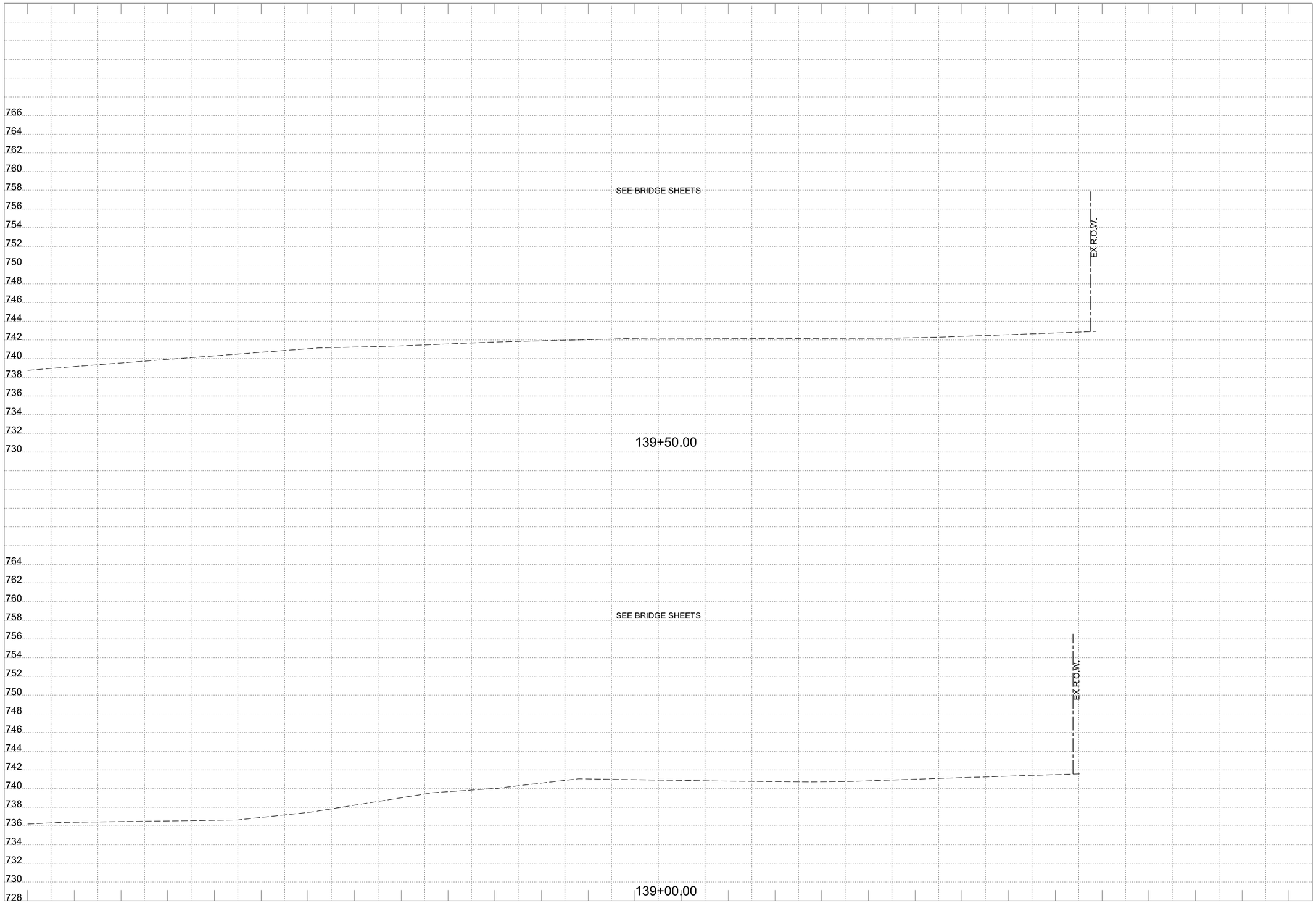

PDF_2D_MON_HW_MR_300.plt
Design
4/14/2023 3:29:56 PM ah3914 HALFF W:\AUS\36000s\36179\002\CADD\Sheets\AUSWXS-SHEETS-36179.dgn

WYOMING SPRINGS

SEGMENT 1
Round Rock, Texas

HALFF
9500 AMBERGLEN BLVD
BLDG F, STE 125
AUSTIN, TX 78729
TEL (512) 777-4600
FAX (512) 252-8141

Revision No.	Date	Description
.	.	.
.	.	.
.	.	.
.	.	.
.	.	.
.	.	.
.	.	.
.	.	.

FOR INFORMATION ONLY

CROSS SECTIONS SHOULD NOT BE USED FOR CONSTRUCTION PURPOSES. REFER TO INFORMATION IN CONSTRUCTION PLANS.

0 5 10 15 20
HORIZONTAL SCALE IN FEET

0 5 10
VERTICAL SCALE IN FEET

Project No.:	36179
Issued:	4/14/2023
Drawn By:	JP
Checked By:	JN
Scale:	AS NOTED

Sheet Title

PROPOSED
CROSS SECTIONS

534

Sheet Number

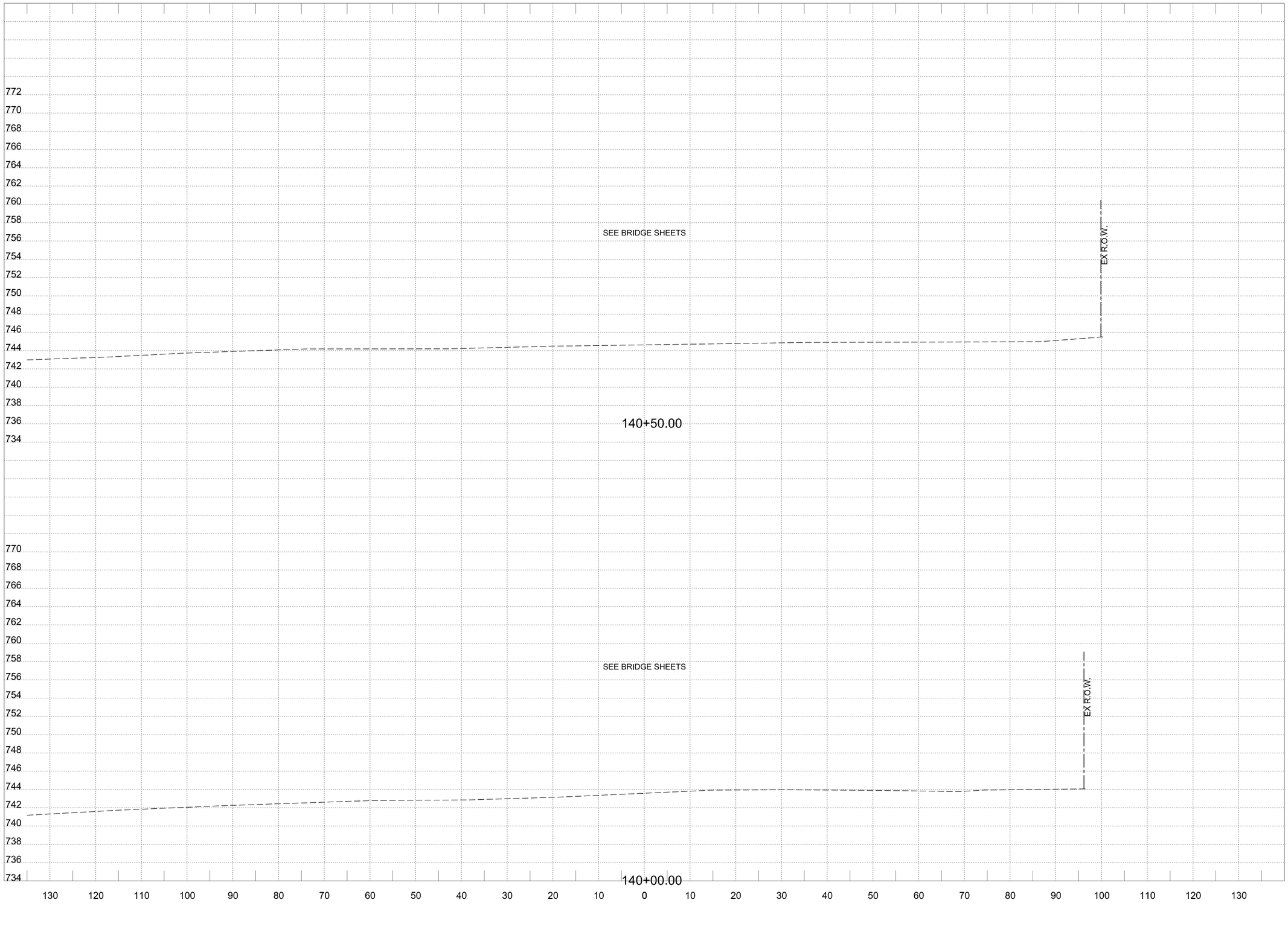

WYOMING SPRINGS
SEGMENT 1
Round Rock, Texas

HALFF
9500 AMBERGLEN BLVD
BLDG F, STE 125
AUSTIN, TX 78729
TEL (512) 777-4600
FAX (512) 252-8141

Revision No.	Date	Description

FOR INFORMATION ONLY

CROSS SECTIONS SHOULD NOT BE USED FOR CONSTRUCTION PURPOSES. REFER TO INFORMATION IN CONSTRUCTION PLANS.

0 5 10 15 20
HORIZONTAL SCALE IN FEET

0 5 10
VERTICAL SCALE IN FEET

Project No.:	36179
Issued:	4/14/2023
Drawn By:	JP
Checked By:	JN
Scale:	AS NOTED

Sheet Title
PROPOSED CROSS SECTIONS

535
Sheet Number

Design
PDF_2D_MON_HW_MR_300.plt
W:\AUS\36000s\36179\0022\CADD\Sheets\AUSWXS-SHEETS-36179.dgn
ah3914 HALFF
4/14/2023 3:29:57 PM

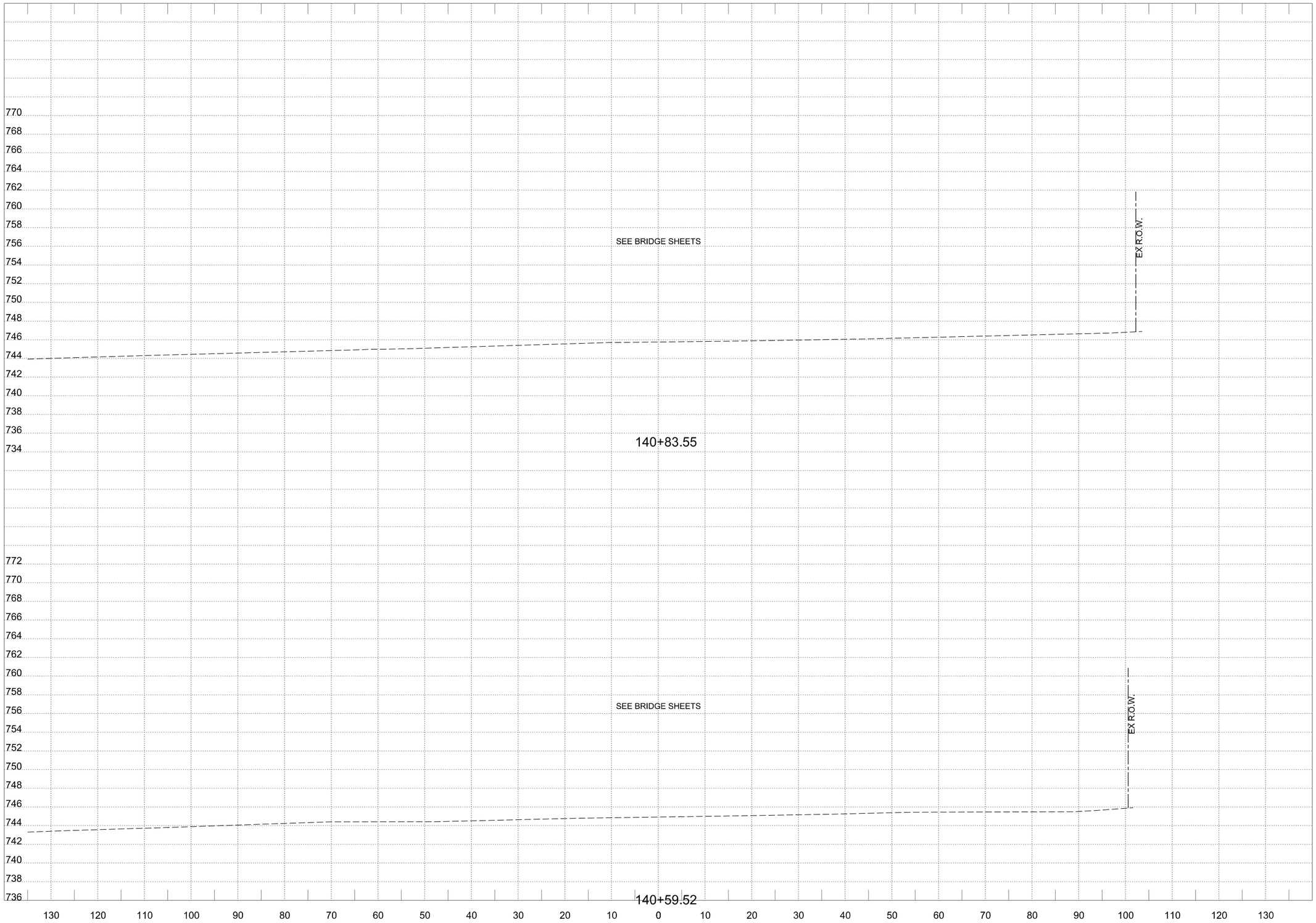

WYOMING SPRINGS

SEGMENT 1

Round Rock, Texas

HALFF

9500 AMBERGLEN BLVD
BLDG F, STE 125
AUSTIN, TX 78729
TEL (512) 777-4600
FAX (512) 252-8141

Revision No.	Date	Description

FOR INFORMATION ONLY

CROSS SECTIONS SHOULD NOT BE USED FOR CONSTRUCTION PURPOSES. REFER TO INFORMATION IN CONSTRUCTION PLANS.

0 5 10 15 20
HORIZONTAL SCALE IN FEET

0 5 10
VERTICAL SCALE IN FEET

Project No.:	36179
Issued:	4/14/2023
Drawn By:	JP
Checked By:	JN
Scale:	AS NOTED

Sheet Title

PROPOSED CROSS SECTIONS

536

Sheet Number

Design PDF_2D_MON_HW_MR_300.plt
4/14/2023 3:29:59 PM ah3914 HALFF W:\AUS\36000s\36179\0022\CADD\Sheets\AUSWXS-SHEETS-36179.dgn

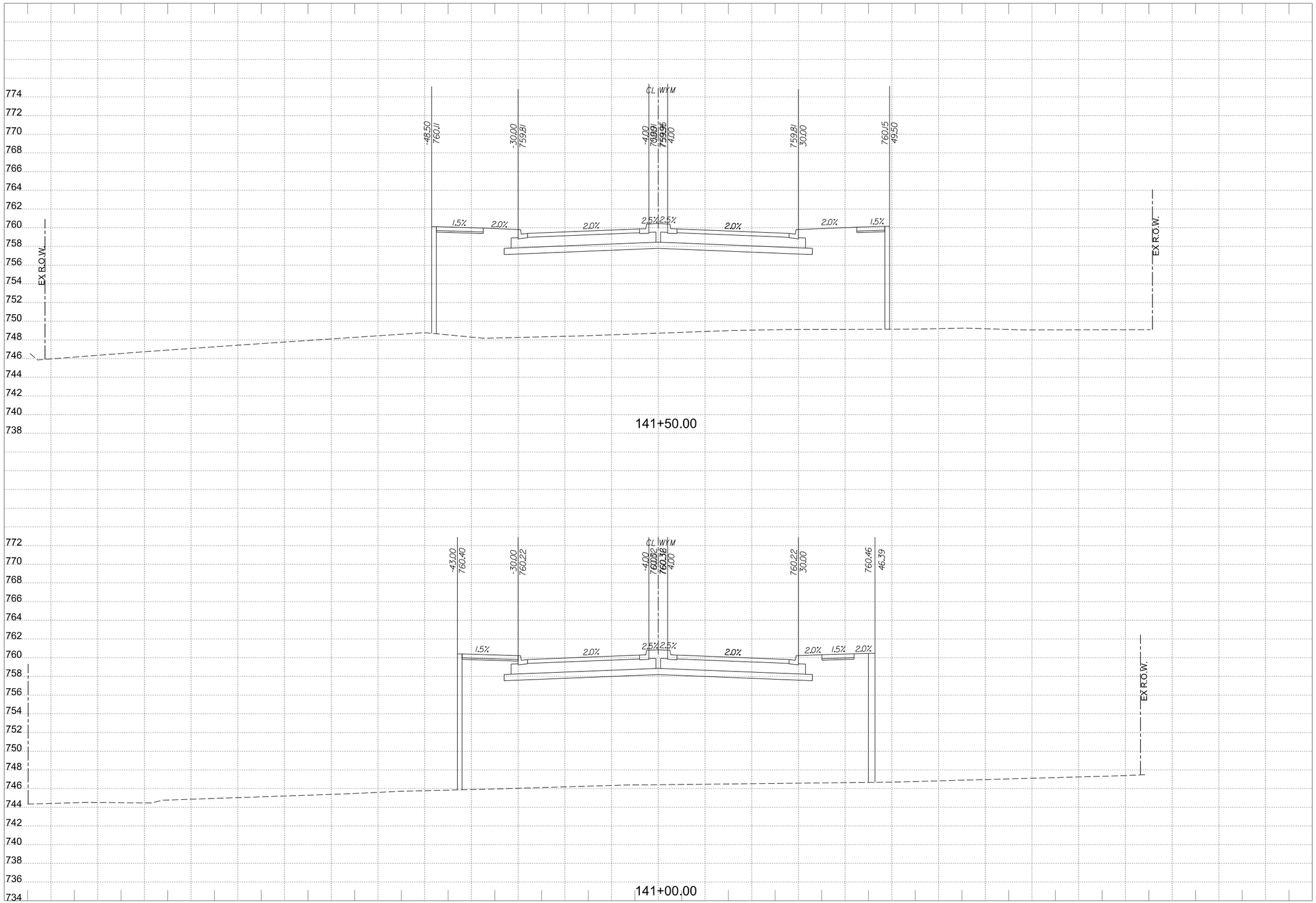

WYOMING SPRINGS
SEGMENT 1
Round Rock, Texas

HALFF
9500 AMBERGLEN BLVD
BLDG F, STE 125
AUSTIN, TX 78729
TEL (512) 777-4600
FAX (512) 252-8141

Revision No.	Date	Description

FOR INFORMATION ONLY

CROSS SECTIONS SHOULD NOT BE USED FOR CONSTRUCTION PURPOSES. REFER TO INFORMATION IN CONSTRUCTION PLANS.

0 5 10 15 20
HORIZONTAL SCALE IN FEET

0 5 10
VERTICAL SCALE IN FEET

Project No.:	36179
Issued:	4/14/2023
Drawn By:	JP
Checked By:	JN
Scale:	AS NOTED

Sheet Title
PROPOSED CROSS SECTIONS

537
Sheet Number

Design
PDF_2D_MON_HW_MR_300.plt
W:\AUS\36000s\36179\0022\CADD\Sheets\AUSWXS-SHEETS-36179.dgn
ah3914 HALFF
4/14/2023 3:30:00 PM

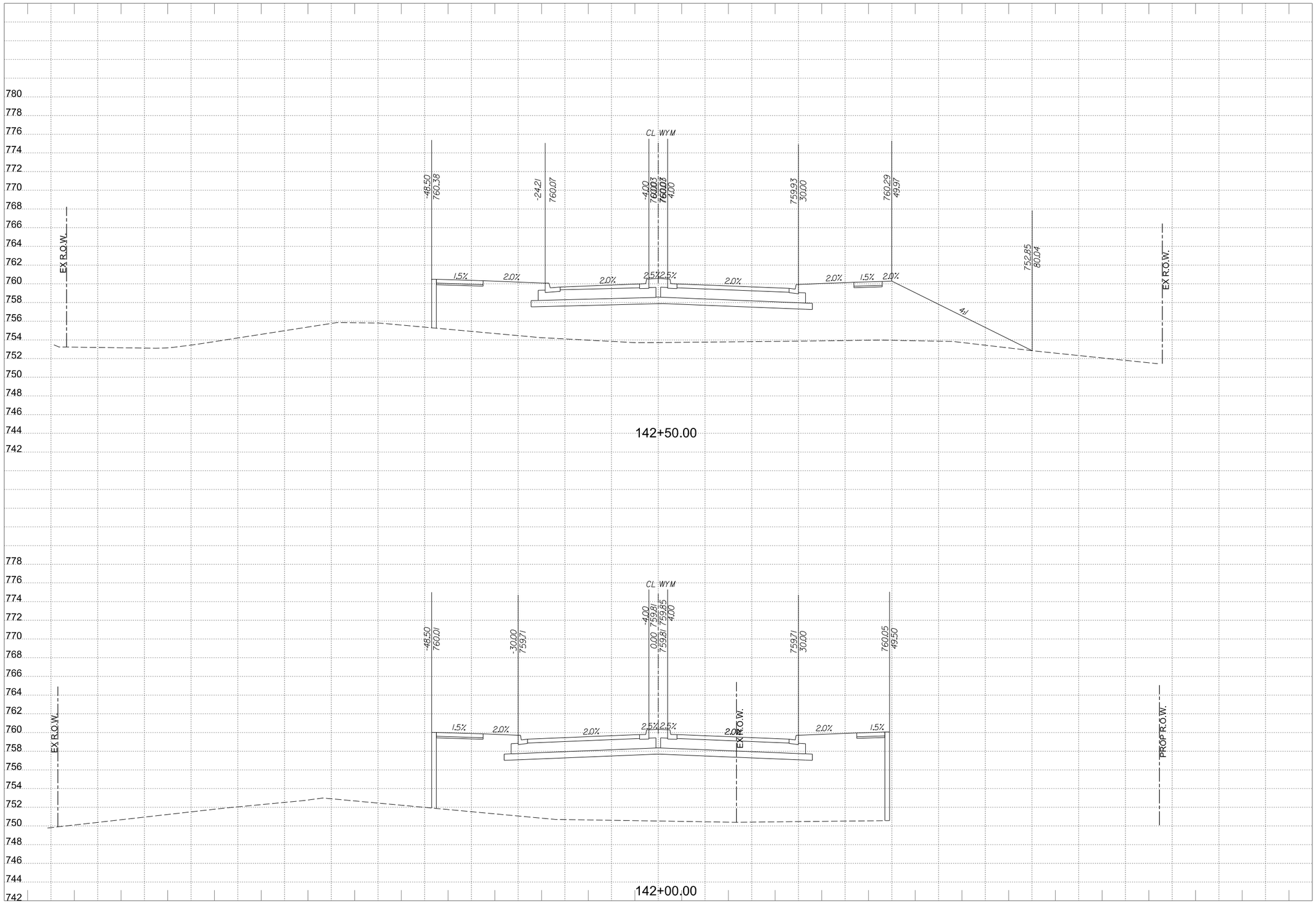

WYOMING SPRINGS
SEGMENT 1
Round Rock, Texas

HALFF
9500 AMBERGLEN BLVD
BLDG F, STE 125
AUSTIN, TX 78729
TEL (512) 777-4600
FAX (512) 252-8141

Revision No.	Date	Description

FOR INFORMATION ONLY

CROSS SECTIONS SHOULD NOT BE USED FOR CONSTRUCTION PURPOSES. REFER TO INFORMATION IN CONSTRUCTION PLANS.

0 5 10 15 20
HORIZONTAL SCALE IN FEET

0 5 10
VERTICAL SCALE IN FEET

Project No.:	36179
Issued:	4/14/2023
Drawn By:	JP
Checked By:	JN
Scale:	AS NOTED

Sheet Title

PROPOSED
CROSS SECTIONS

538

Sheet Number

Design PDF_2D_MON_HW_MR_300.plt
4/14/2023 3:30:01 PM ah3914 HALFF W:\AUS\36000s\36179\0022\CADD\Sheets\AUSWXS-SHEETS-36179.dgn

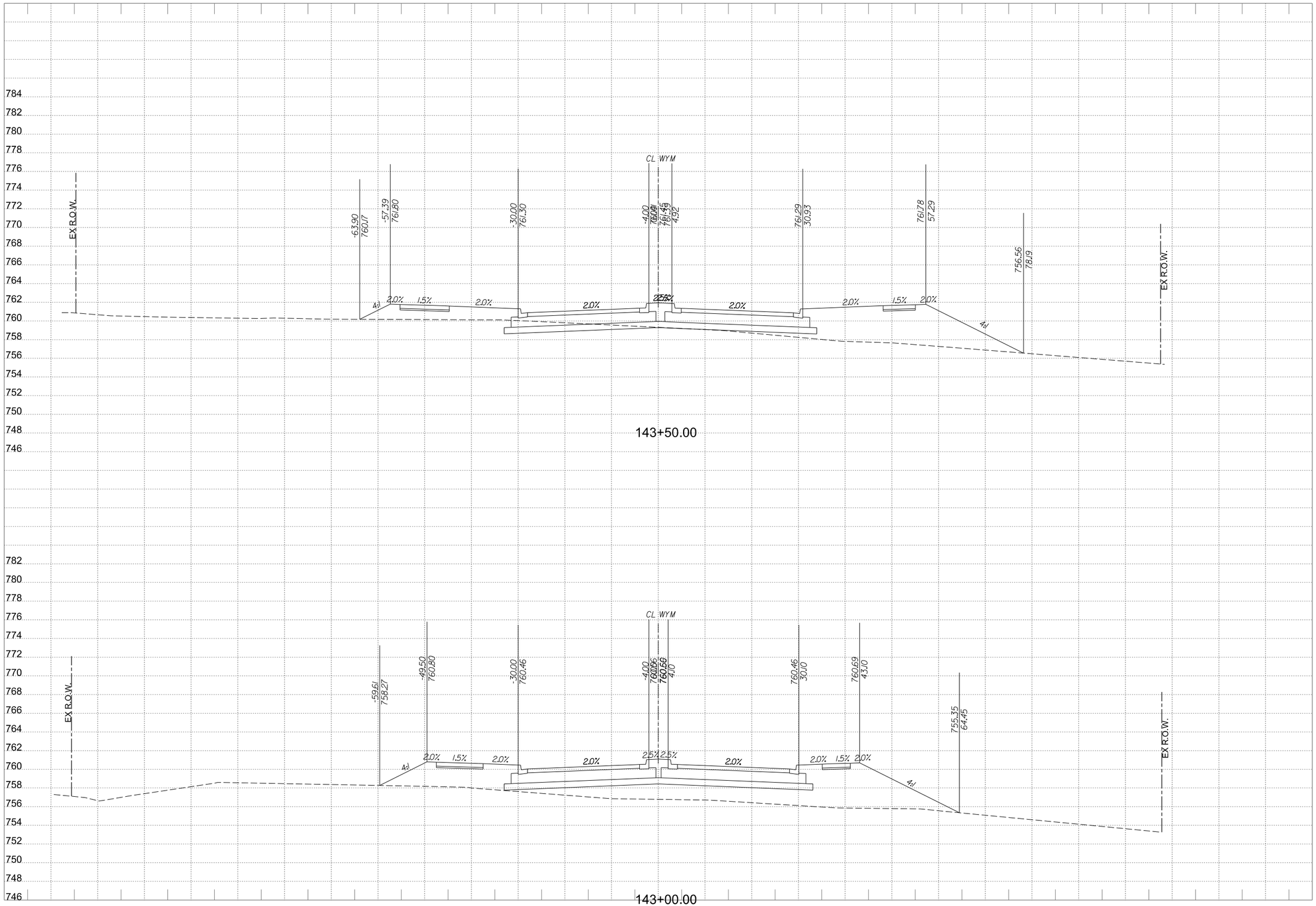

WYOMING SPRINGS
SEGMENT 1
Round Rock, Texas

HALFF
9500 AMBERGLEN BLVD
BLDG F, STE 125
AUSTIN, TX 78729
TEL (512) 777-4600
FAX (512) 252-8141

Revision No.	Date	Description

FOR INFORMATION ONLY

CROSS SECTIONS SHOULD NOT BE USED FOR CONSTRUCTION PURPOSES. REFER TO INFORMATION IN CONSTRUCTION PLANS.

0 5 10 15 20
HORIZONTAL SCALE IN FEET

0 5 10
VERTICAL SCALE IN FEET

Project No.:	36179
Issued:	4/14/2023
Drawn By:	JP
Checked By:	JN
Scale:	AS NOTED

Sheet Title
PROPOSED CROSS SECTIONS

539
Sheet Number

Design PDF_2D_MON_HW_MR_300.plt
4/14/2023 3:30:10 PM ah3914 HALFF W:\AUS\36000s\36179\0022\CADD\Sheets\AUSWXS-SHEETS-36179.dgn

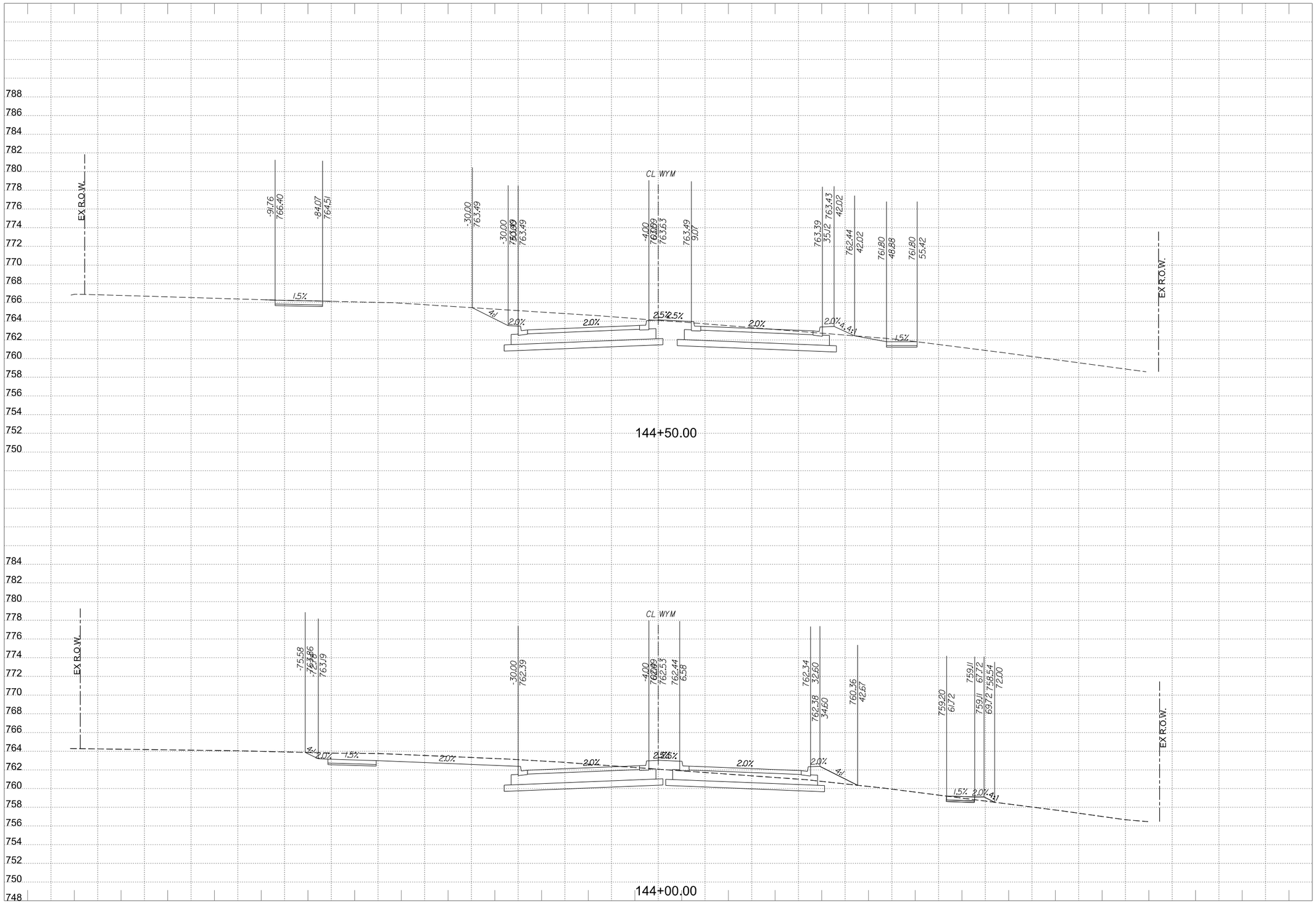

Design PDF_2D_MON_HW_MR_300.plt

4/14/2023 3:30:12 PM ah3914 HALFF W:\AUS\36000s\36179002\CADD\Sheets\AUSWXS-SHEETS-36179.dgn

WYOMING SPRINGS

SEGMENT 1

Round Rock, Texas

HALFF

9500 AMBERGLEN BLVD
BLDG F, STE 125
AUSTIN, TX 78729
TEL (512) 777-4600
FAX (512) 252-8141

Revision No.	Date	Description

FOR INFORMATION ONLY

CROSS SECTIONS SHOULD NOT BE USED FOR CONSTRUCTION PURPOSES. REFER TO INFORMATION IN CONSTRUCTION PLANS.

0 5 10 15 20
HORIZONTAL SCALE IN FEET

0 5 10
VERTICAL SCALE IN FEET

Project No.:	36179
Issued:	4/14/2023
Drawn By:	JP
Checked By:	JN
Scale:	AS NOTED

Sheet Title

PROPOSED CROSS SECTIONS

540

Sheet Number

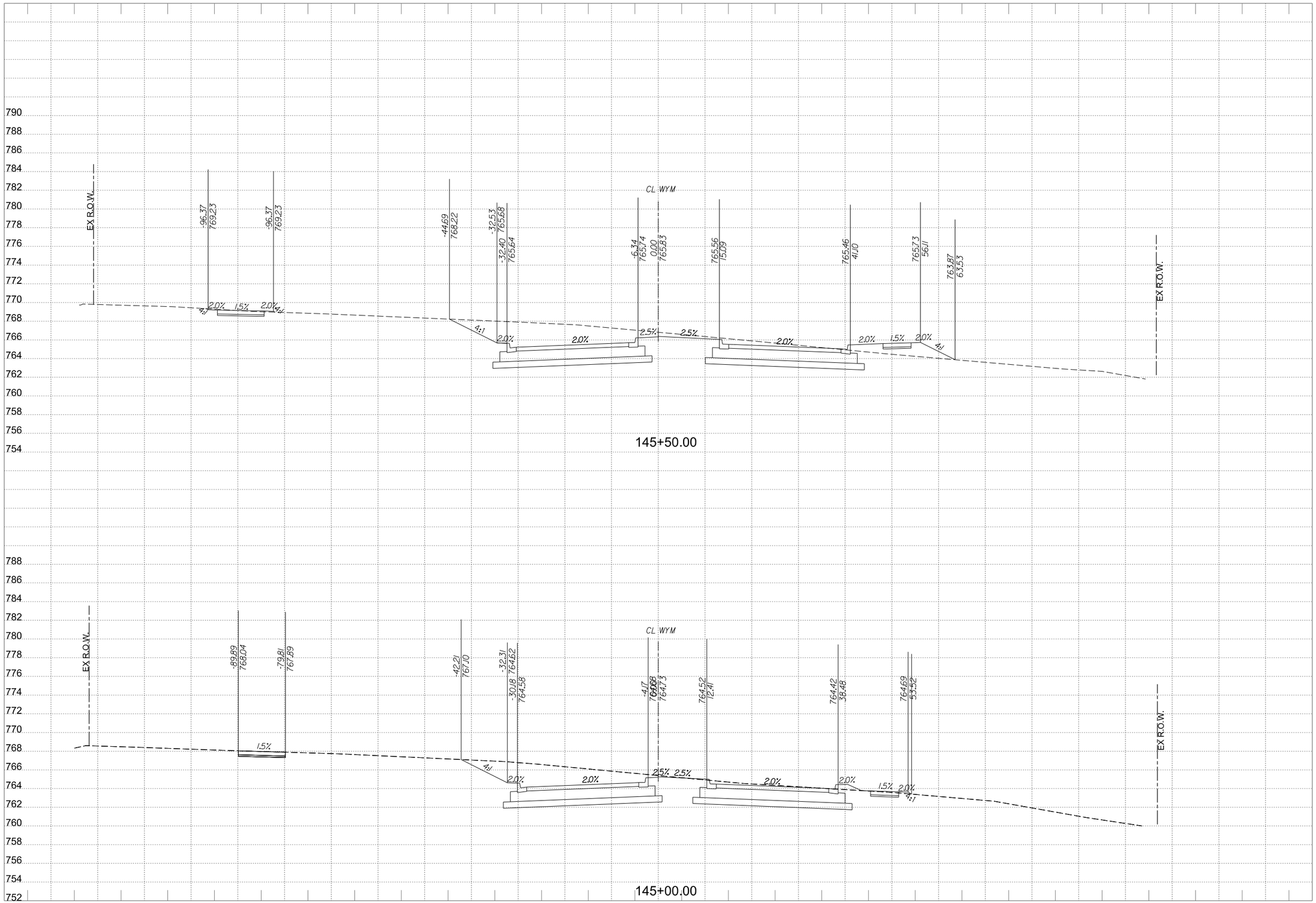

WYOMING SPRINGS
SEGMENT 1
Round Rock, Texas

HALFF
9500 AMBERGLEN BLVD
BLDG F, STE 125
AUSTIN, TX 78729
TEL (512) 777-4600
FAX (512) 252-8141

Revision No.	Date	Description

FOR INFORMATION ONLY

CROSS SECTIONS SHOULD NOT BE USED FOR CONSTRUCTION PURPOSES. REFER TO INFORMATION IN CONSTRUCTION PLANS.

0 5 10 15 20
HORIZONTAL SCALE IN FEET

0 5 10
VERTICAL SCALE IN FEET

Project No.:	36179
Issued:	4/14/2023
Drawn By:	JP
Checked By:	JN
Scale:	AS NOTED

Sheet Title
PROPOSED CROSS SECTIONS

541
Sheet Number

Design
PDF_2D_MON_HW_MR_300.plt
4/14/2023 3:30:13 PM ah3914 HALFF W:\AUS\36000s\36179002\CADD\Sheets\AUS\XS-SHEETS-36179.dgn

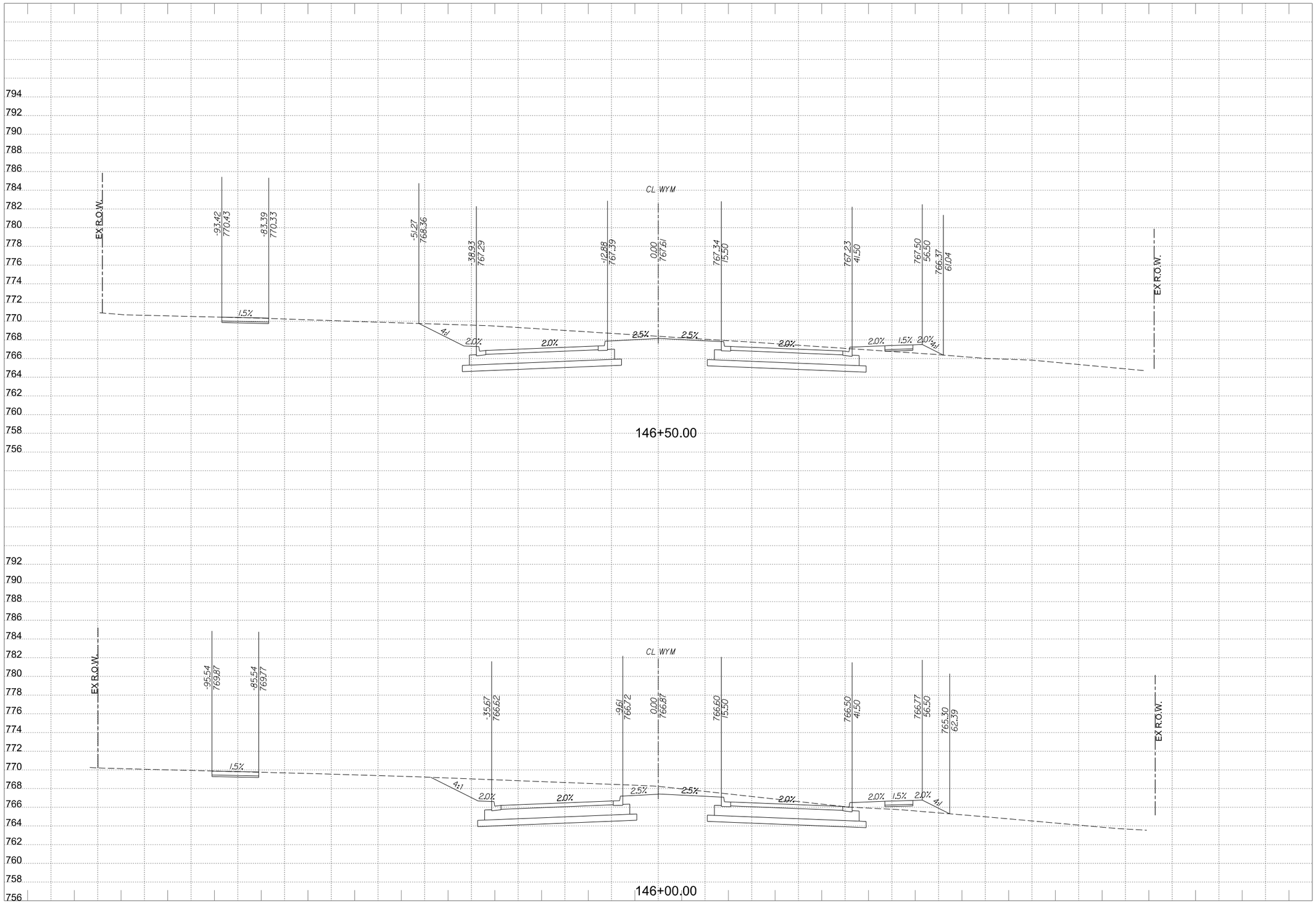

Design PDF_2D_MON_HW_MR_300.plt

4/14/2023 3:30:14 PM ah3914 HALFF W:\AUS\36000s\36179\002\CADD\Sheets\AUSWXS-SHEETS-36179.dgn

WYOMING SPRINGS

SEGMENT 1

Round Rock, Texas

HALFF

9500 AMBERGLEN BLVD
BLDG F, STE 125
AUSTIN, TX 78729
TEL (512) 777-4600
FAX (512) 252-8141

Revision No.	Date	Description

FOR INFORMATION ONLY

CROSS SECTIONS SHOULD NOT BE USED FOR CONSTRUCTION PURPOSES. REFER TO INFORMATION IN CONSTRUCTION PLANS.

0 5 10 15 20
HORIZONTAL SCALE IN FEET

0 5 10
VERTICAL SCALE IN FEET

Project No.:	36179
Issued:	4/14/2023
Drawn By:	JP
Checked By:	JN
Scale:	AS NOTED

Sheet Title

PROPOSED CROSS SECTIONS

542

Sheet Number

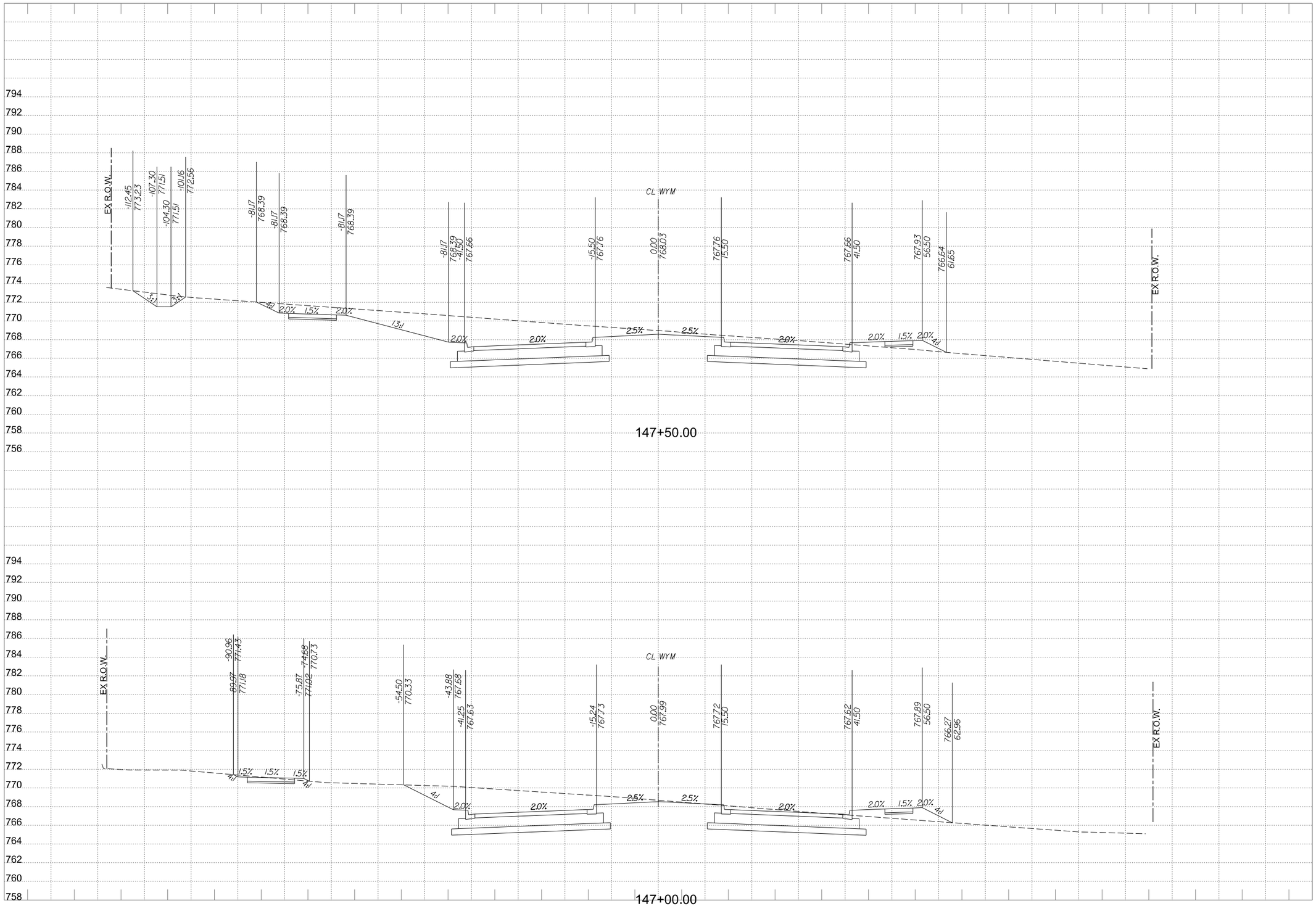

PDF_2D_MON_HW_MR_300.plt

Design

W:\AUS\36000s\36179\002\CADD\Sheets\AUSWXS-SHEETS-36179.dgn

ah3914 HALFF

4/14/2023 3:30:16 PM

WYOMING SPRINGS

SEGMENT 1

Round Rock, Texas

HALFF

9500 AMBERGLEN BLVD
BLDG F, STE 125
AUSTIN, TX 78729
TEL (512) 777-4600
FAX (512) 252-8141

Revision No.	Date	Description
.	.	.
.	.	.
.	.	.
.	.	.
.	.	.
.	.	.
.	.	.
.	.	.

FOR INFORMATION ONLY

CROSS SECTIONS SHOULD NOT BE USED FOR CONSTRUCTION PURPOSES. REFER TO INFORMATION IN CONSTRUCTION PLANS.

0 5 10 15 20
HORIZONTAL SCALE IN FEET

0 5 10
VERTICAL SCALE IN FEET

Project No.:	36179
Issued:	4/14/2023
Drawn By:	JP
Checked By:	JN
Scale:	AS NOTED

Sheet Title

PROPOSED CROSS SECTIONS

543

Sheet Number

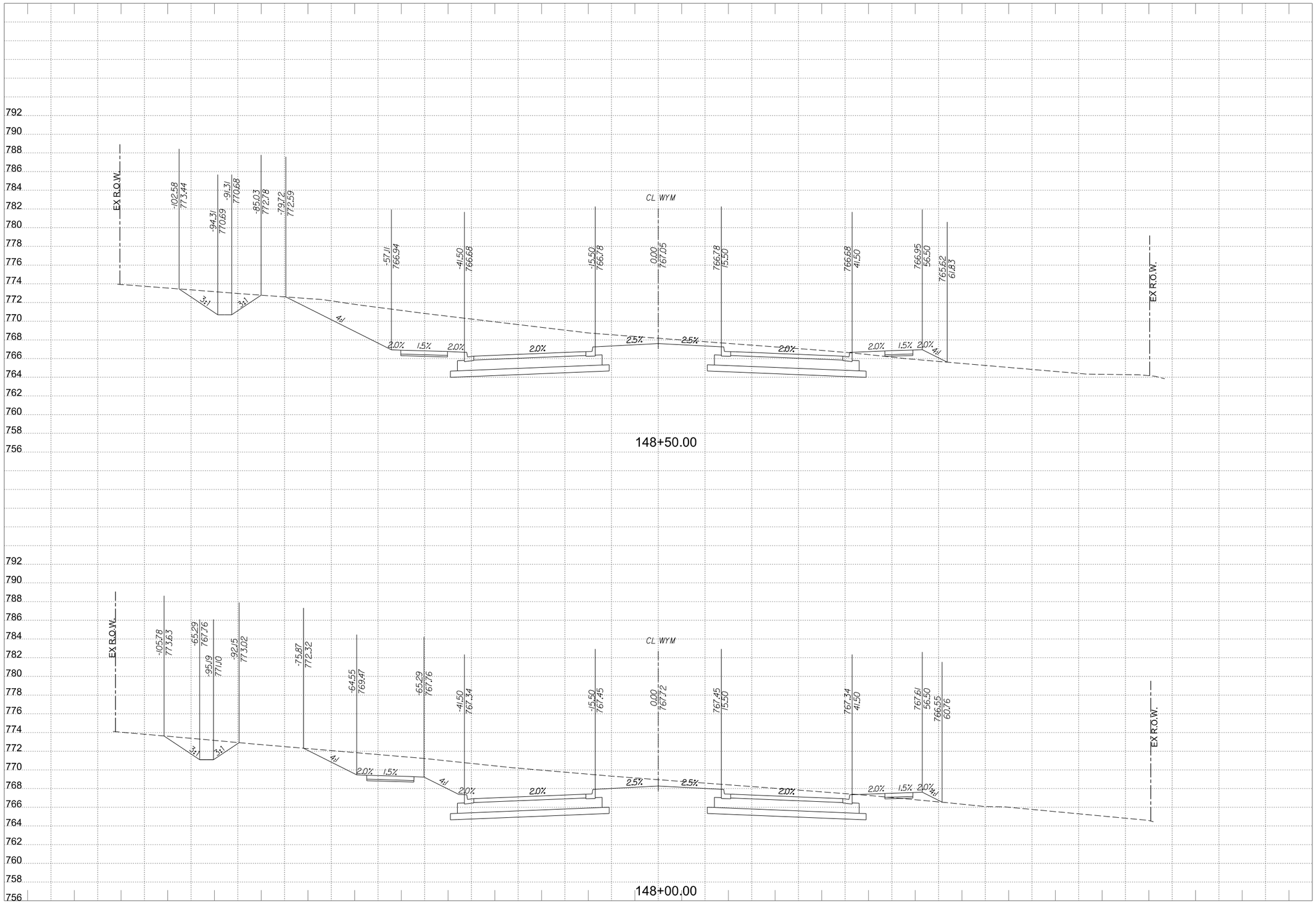

PDF_2D_MON_HW_MR_300.plt

Design

W:\AUS\36000s\36179002\CADD\Sheets\AUSWXS-SHEETS-36179.dgn

4/14/2023 3:30:17 PM ah3914 HALFF

WYOMING SPRINGS

SEGMENT 1

Round Rock, Texas

HALFF

9500 AMBERGLEN BLVD
BLDG F, STE 125
AUSTIN, TX 78729
TEL (512) 777-4600
FAX (512) 252-8141

Revision No.	Date	Description

FOR INFORMATION ONLY

CROSS SECTIONS SHOULD NOT BE USED FOR CONSTRUCTION PURPOSES. REFER TO INFORMATION IN CONSTRUCTION PLANS.

0 5 10 15 20
HORIZONTAL SCALE IN FEET

0 5 10
VERTICAL SCALE IN FEET

Project No.:	36179
Issued:	4/14/2023
Drawn By:	JP
Checked By:	JN
Scale:	AS NOTED

Sheet Title

PROPOSED CROSS SECTIONS

544

Sheet Number

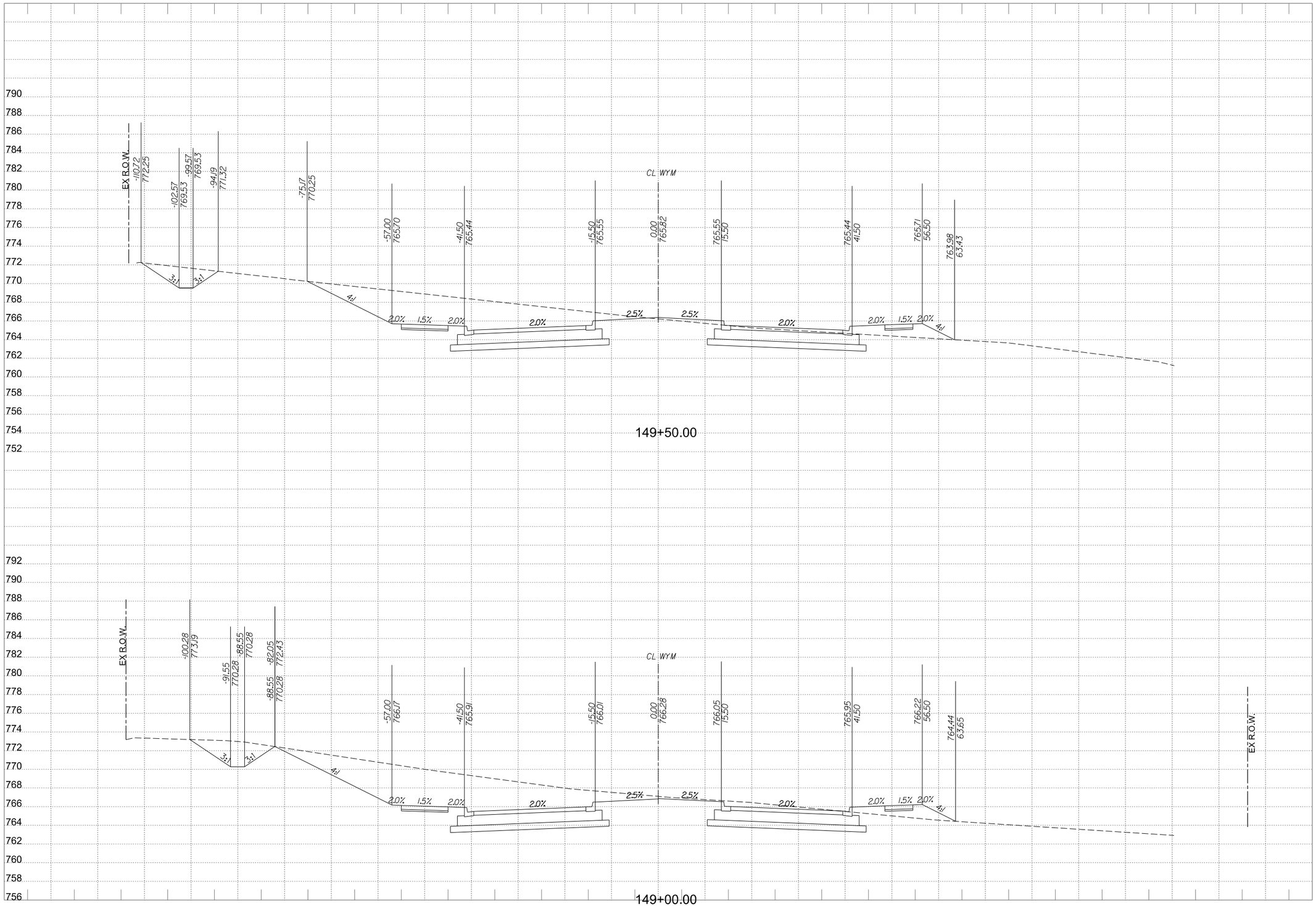

PDF_2D_MON_HW_MR_300.plt

Design

W:\AUS\36000s\36179002\CADD\Sheets\AUSWXS-SHEETS-36179.dgn

4/14/2023 3:30:18 PM ah3914 HALFF

WYOMING SPRINGS

SEGMENT 1

Round Rock, Texas

HALFF

9500 AMBERGLEN BLVD
BLDG F, STE 125
AUSTIN, TX 78729
TEL (512) 777-4600
FAX (512) 252-8141

Revision No.	Date	Description

FOR INFORMATION ONLY

CROSS SECTIONS SHOULD NOT BE USED FOR CONSTRUCTION PURPOSES. REFER TO INFORMATION IN CONSTRUCTION PLANS.

0 5 10 15 20
HORIZONTAL SCALE IN FEET

0 5 10
VERTICAL SCALE IN FEET

Project No.:	36179
Issued:	4/14/2023
Drawn By:	JP
Checked By:	JN
Scale:	AS NOTED

Sheet Title

PROPOSED CROSS SECTIONS

545

Sheet Number

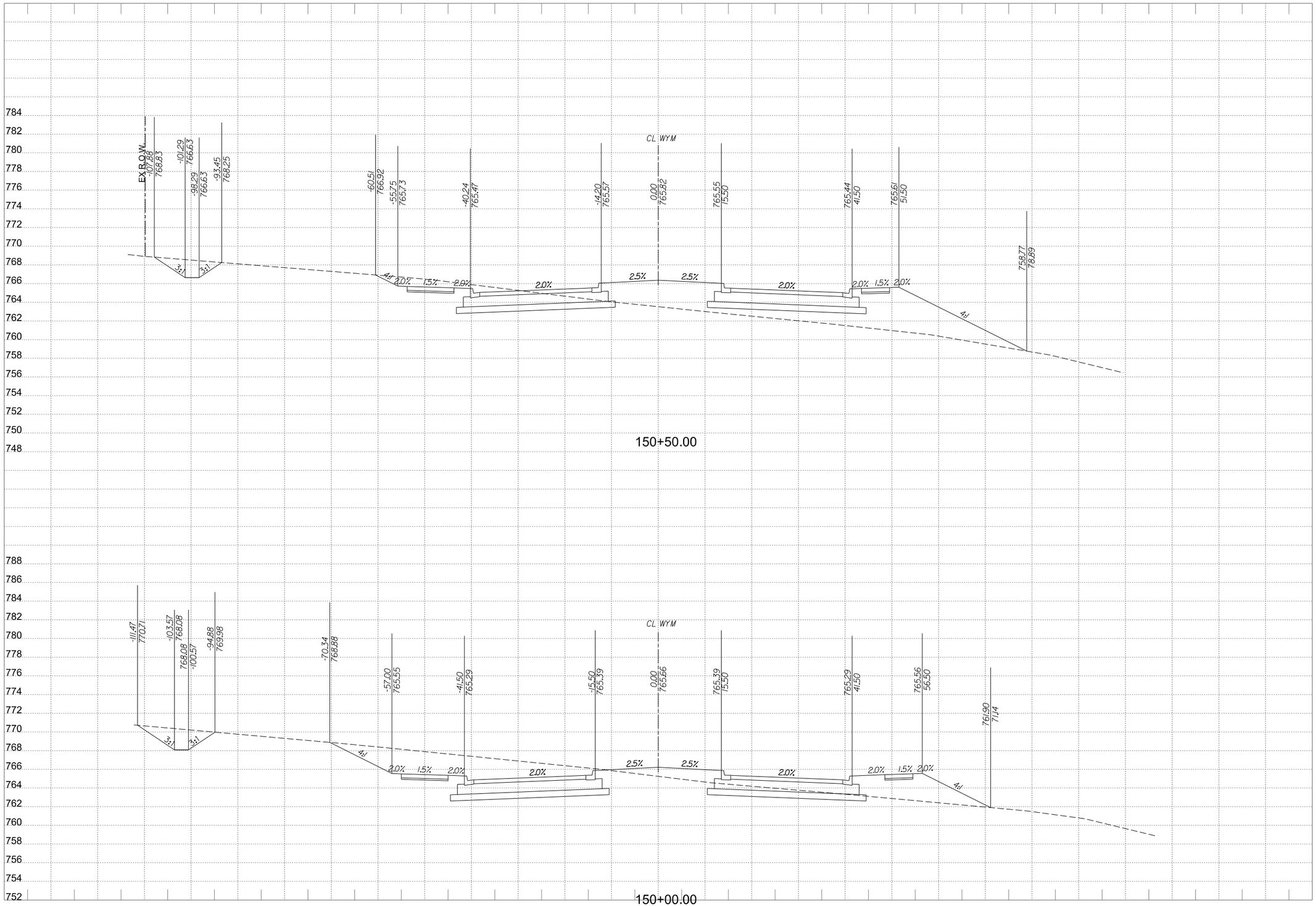

Design PDF_2D_MON_HW_MR_300.plt

4/14/2023 3:30:19 PM ah3914 HALFF W:\AUS\36000s\36179002\CADD\Sheets\AUSWXS-SHEETS-36179.dgn

WYOMING SPRINGS

SEGMENT 1

Round Rock, Texas

HALFF

9500 AMBERGLEN BLVD
BLDG F, STE 125
AUSTIN, TX 78729
TEL (512) 777-4600
FAX (512) 252-8141

Revision No.	Date	Description

FOR INFORMATION ONLY

CROSS SECTIONS SHOULD NOT BE USED FOR CONSTRUCTION PURPOSES. REFER TO INFORMATION IN CONSTRUCTION PLANS.

0 5 10 15 20
HORIZONTAL SCALE IN FEET

0 5 10
VERTICAL SCALE IN FEET

Project No.:	36179
Issued:	4/14/2023
Drawn By:	JP
Checked By:	JN
Scale:	AS NOTED

Sheet Title

PROPOSED CROSS SECTIONS

546

Sheet Number

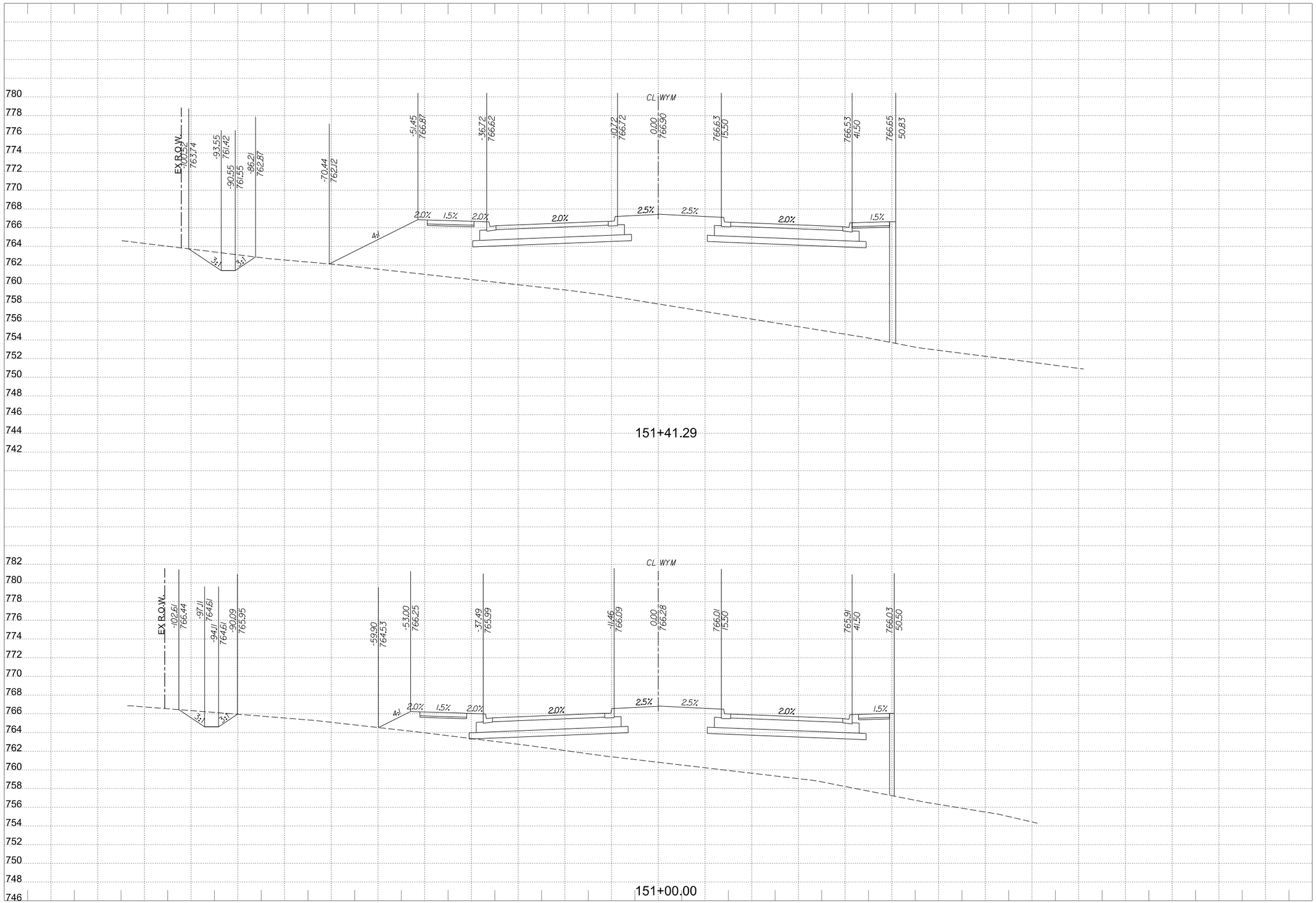

WYOMING SPRINGS
SEGMENT 1
Round Rock, Texas

HALFF
9500 AMBERGLEN BLVD
BLDG F, STE 125
AUSTIN, TX 78729
TEL (512) 777-4600
FAX (512) 252-8141

Revision No.	Date	Description

FOR INFORMATION ONLY

CROSS SECTIONS SHOULD NOT BE USED FOR CONSTRUCTION PURPOSES. REFER TO INFORMATION IN CONSTRUCTION PLANS.

0 5 10 15 20
HORIZONTAL SCALE IN FEET

0 5 10
VERTICAL SCALE IN FEET

Project No.:	36179
Issued:	4/14/2023
Drawn By:	JP
Checked By:	JN
Scale:	AS NOTED

Sheet Title
PROPOSED CROSS SECTIONS

547
Sheet Number

Design
PDF_2D_MON_HW_MR_300.plt
4/14/2023 3:30:21 PM ah3914 HALFF W:\AUS\36000s\36179\0022\CADD\Sheets\AUSWXS-SHEETS-36179.dgn

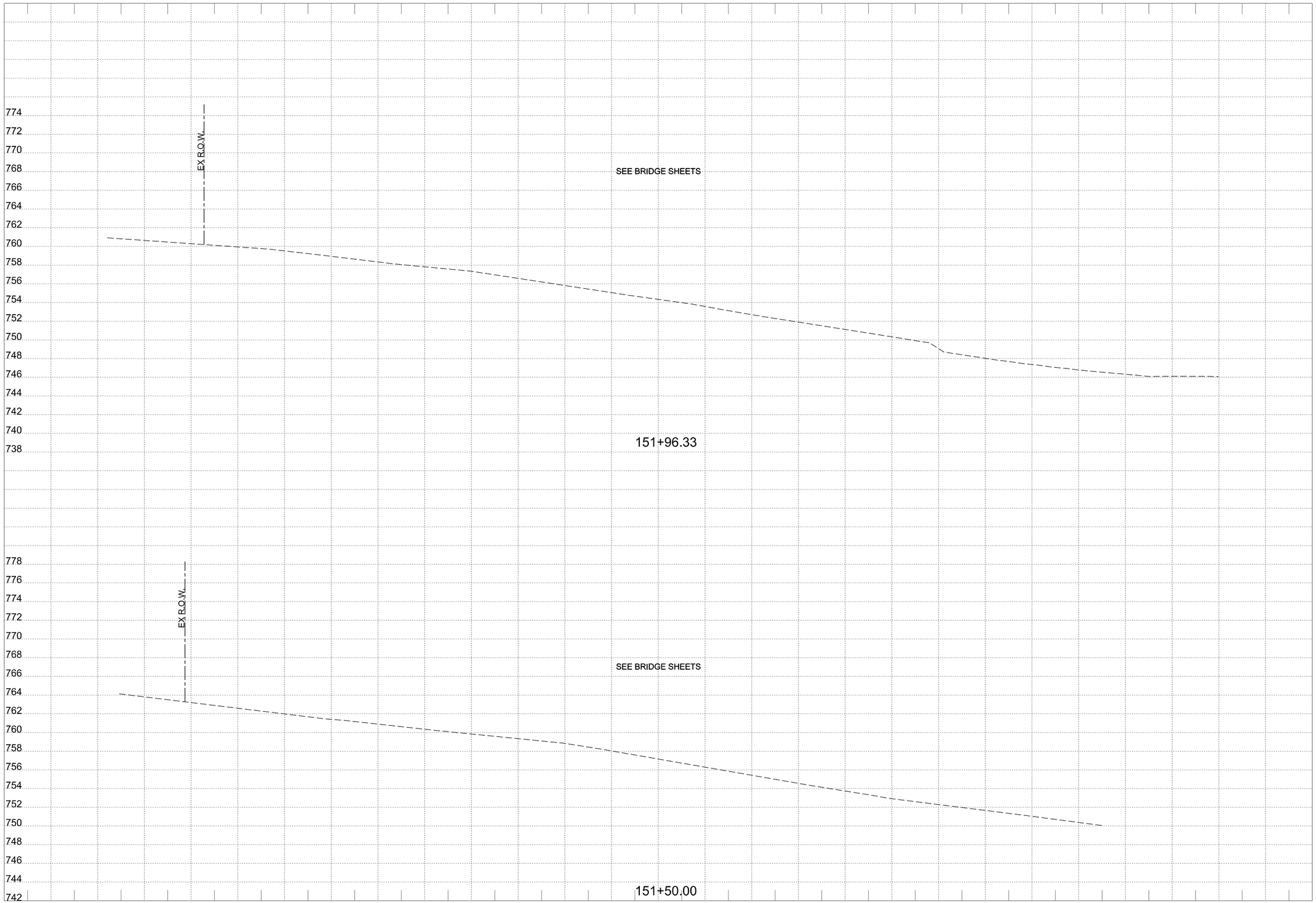

Design PDF_2D_MON_HW_MR_300.plt
4/14/2023 3:30:22 PM ah3914 HALFF W:\AUS\36000s\36179\0022\CADD\Sheets\AUSVXS-SHEETS-36179.dgn

WYOMING SPRINGS
SEGMENT 1
Round Rock, Texas

HALFF
9500 AMBERGLEN BLVD
BLDG F, STE 125
AUSTIN, TX 78729
TEL (512) 777-4600
FAX (512) 252-8141

Revision No.	Date	Description

FOR INFORMATION ONLY

CROSS SECTIONS SHOULD NOT BE USED FOR CONSTRUCTION PURPOSES. REFER TO INFORMATION IN CONSTRUCTION PLANS.

0 5 10 15 20
HORIZONTAL SCALE IN FEET

0 5 10
VERTICAL SCALE IN FEET

Project No.:	36179
Issued:	4/14/2023
Drawn By:	JP
Checked By:	JN
Scale:	AS NOTED

Sheet Title
PROPOSED CROSS SECTIONS

548
Sheet Number

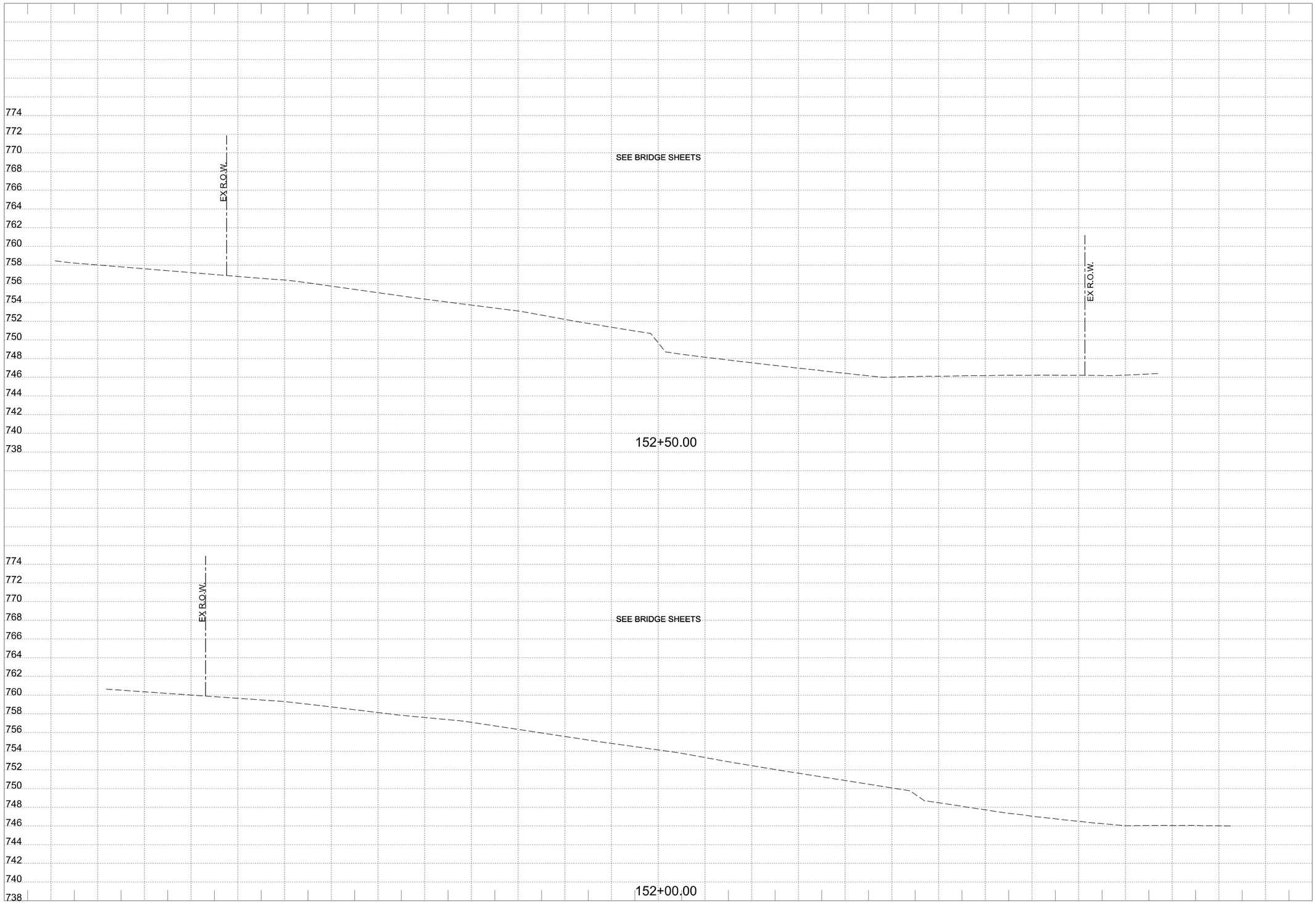

WYOMING SPRINGS
SEGMENT 1
Round Rock, Texas

HALFF
9500 AMBERGLEN BLVD
BLDG F, STE 125
AUSTIN, TX 78729
TEL (512) 777-4600
FAX (512) 252-8141

Revision No.	Date	Description
.	.	.
.	.	.
.	.	.
.	.	.
.	.	.
.	.	.
.	.	.
.	.	.

FOR INFORMATION ONLY

CROSS SECTIONS SHOULD NOT BE USED FOR CONSTRUCTION PURPOSES. REFER TO INFORMATION IN CONSTRUCTION PLANS.

0 5 10 15 20
HORIZONTAL SCALE IN FEET

0 5 10
VERTICAL SCALE IN FEET

Project No.:	36179
Issued:	4/14/2023
Drawn By:	JP
Checked By:	JN
Scale:	AS NOTED

Sheet Title
PROPOSED CROSS SECTIONS

549
Sheet Number

Design
PDF_2D_MON_HW_MR_300.plt
W:\AUS\36000s\36179\0022\CADD\Sheets\AUSWXS-SHEETS-36179.dgn
ah3914 HALFF
4/14/2023 3:30:23 PM

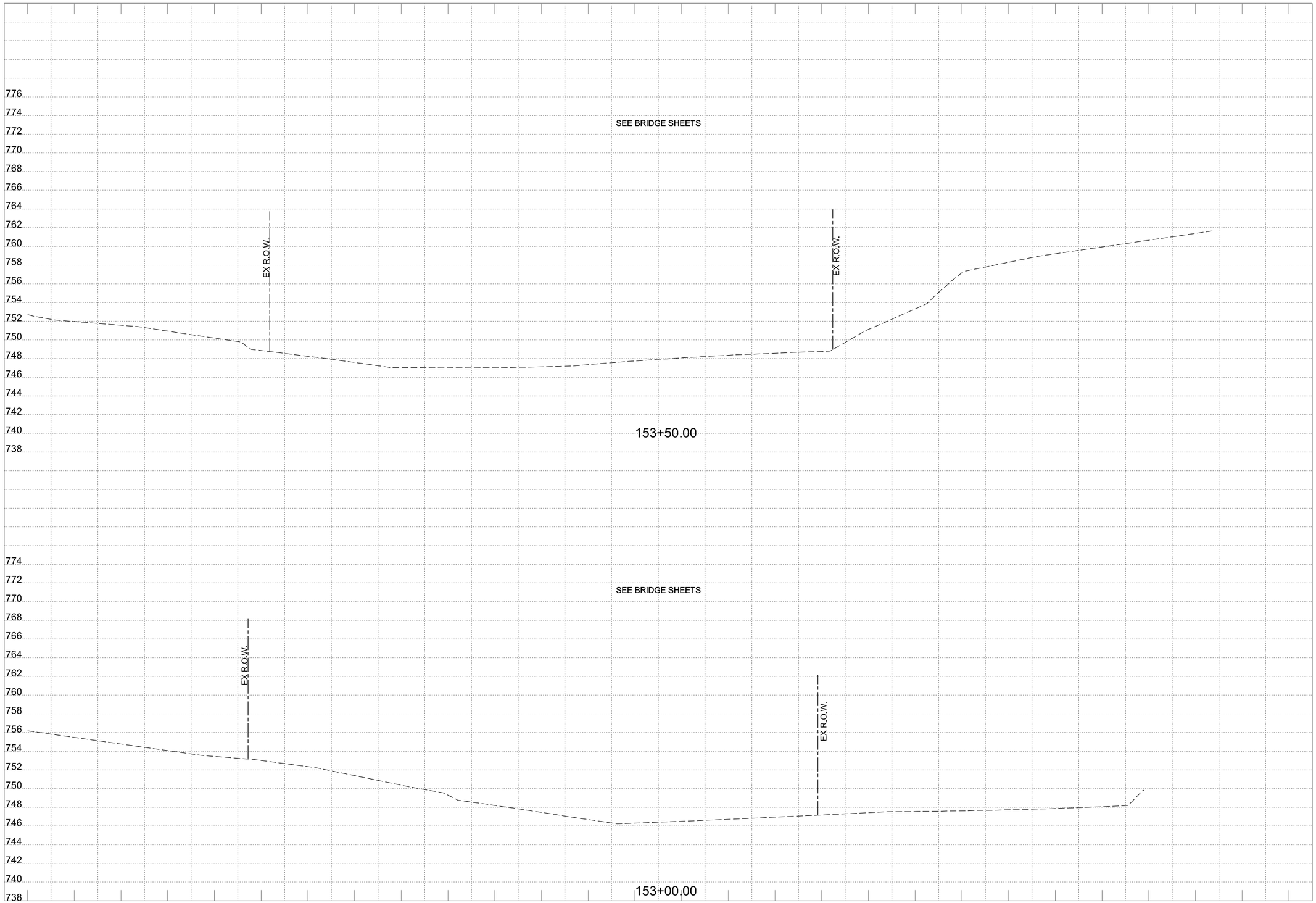

WYOMING SPRINGS
SEGMENT 1
Round Rock, Texas

HALFF
9500 AMBERGLEN BLVD
BLDG F, STE 125
AUSTIN, TX 78729
TEL (512)777-4600
FAX (512) 252-8141

Revision No.	Date	Description

FOR INFORMATION ONLY

CROSS SECTIONS SHOULD NOT BE USED FOR CONSTRUCTION PURPOSES. REFER TO INFORMATION IN CONSTRUCTION PLANS.

0 5 10 15 20
HORIZONTAL SCALE IN FEET

0 5 10
VERTICAL SCALE IN FEET

Project No.:	36179
Issued:	4/14/2023
Drawn By:	JP
Checked By:	JN
Scale:	AS NOTED

Sheet Title

PROPOSED
CROSS SECTIONS

550

Sheet Number

Design PDF_2D_MON_HW_MR_300.plt
4/14/2023 3:30:25 PM ah3914 HALFF W:\AUS\36000s\36179\0022\CADD\Sheets\AUSWXS-SHEETS-36179.dgn

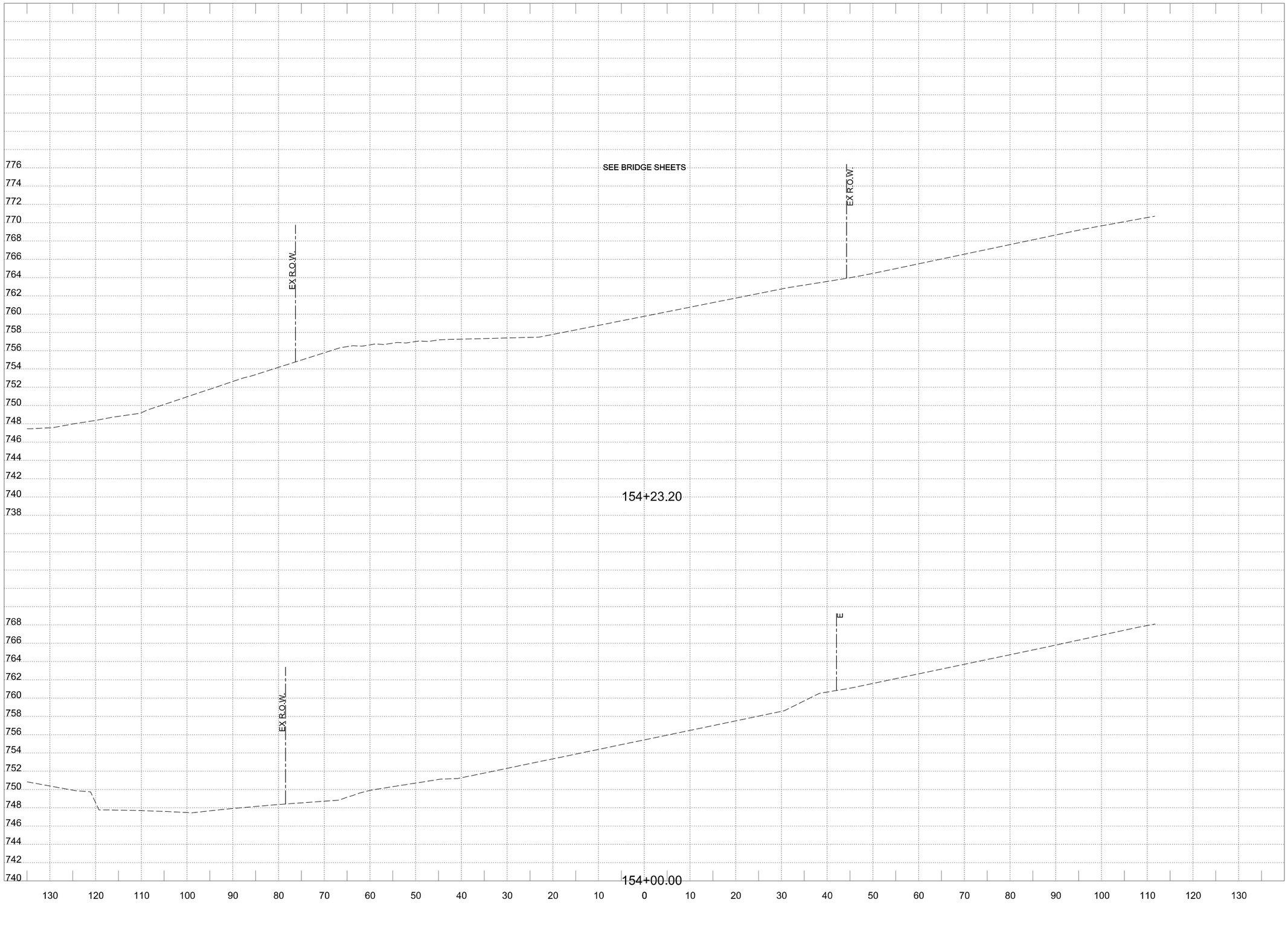

WYOMING SPRINGS

SEGMENT 1

Round Rock, Texas

HALFF

9500 AMBERGLEN BLVD
BLDG F, STE 125
AUSTIN, TX 78729
TEL (512)777-4600
FAX (512) 252-8141

Revision No.	Date	Description
.	.	.
.	.	.
.	.	.
.	.	.
.	.	.
.	.	.
.	.	.
.	.	.

FOR INFORMATION ONLY

CROSS SECTIONS SHOULD NOT BE USED FOR CONSTRUCTION PURPOSES. REFER TO INFORMATION IN CONSTRUCTION PLANS.

0 5 10 15 20
HORIZONTAL SCALE IN FEET

0 5 10
VERTICAL SCALE IN FEET

Project No.:	36179
Issued:	4/14/2023
Drawn By:	JP
Checked By:	JN
Scale:	AS NOTED

Sheet Title

PROPOSED CROSS SECTIONS

551

Sheet Number

Design PDF_2D_MON_HW_MR_300.plt
W:\AUS\36000s\36179\0022\CADD\Sheets\AUSWXS-SHEETS-36179.dgn
ah3914 HALFF
3:30:26 PM
4/14/2023

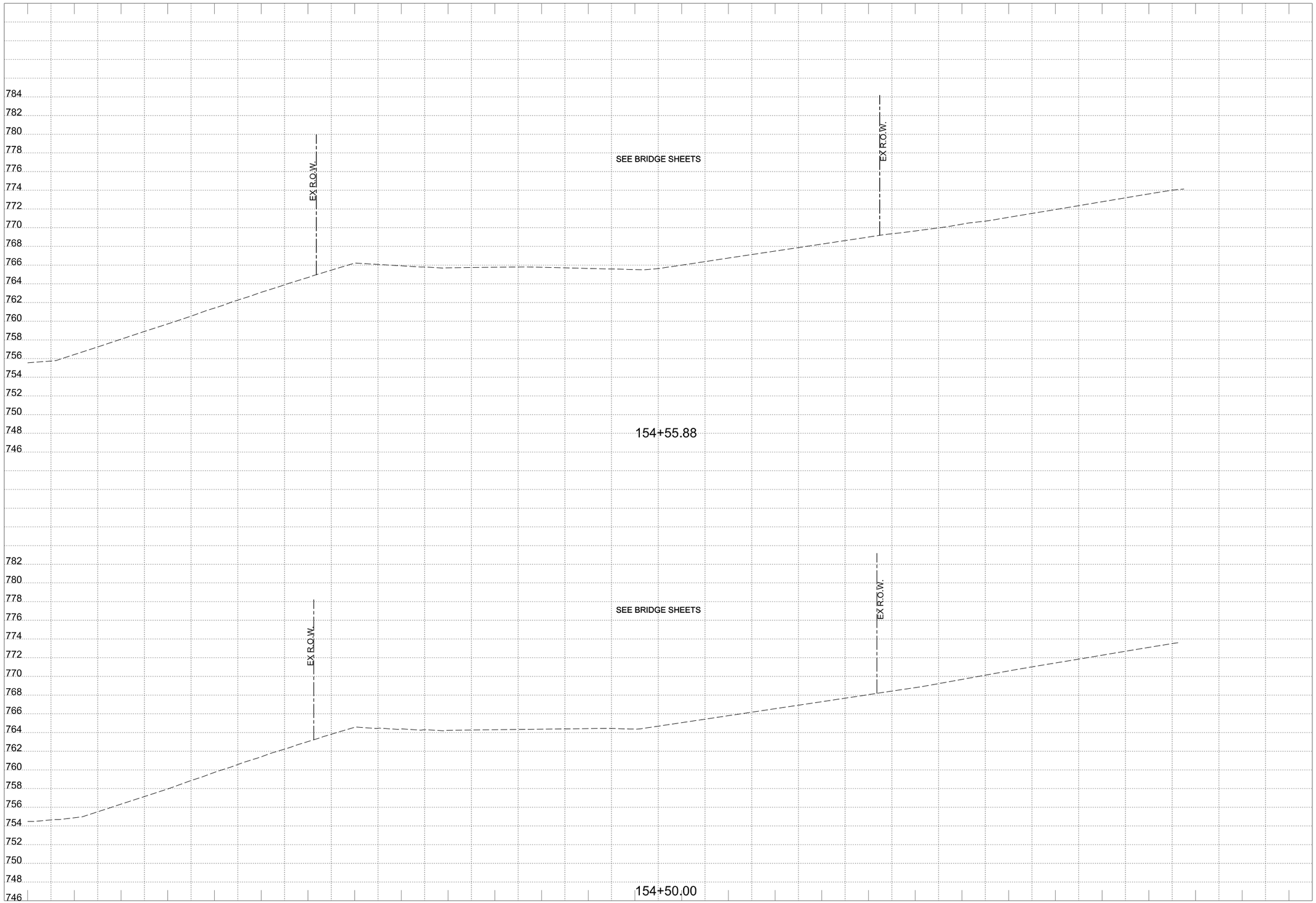

WYOMING SPRINGS

SEGMENT 1

Round Rock, Texas

HALFF

9500 AMBERGLEN BLVD
BLDG F, STE 125
AUSTIN, TX 78729
TEL (512) 777-4600
FAX (512) 252-8141

Revision No.	Date	Description

FOR INFORMATION ONLY

CROSS SECTIONS SHOULD NOT BE USED FOR CONSTRUCTION PURPOSES. REFER TO INFORMATION IN CONSTRUCTION PLANS.

0 5 10 15 20
HORIZONTAL SCALE IN FEET

0 5 10
VERTICAL SCALE IN FEET

Project No.:	36179
Issued:	4/14/2023
Drawn By:	JP
Checked By:	JN
Scale:	AS NOTED

Sheet Title

PROPOSED CROSS SECTIONS

552

Sheet Number

Design PDF_2D_MON_HW_MR_300.plt
4/14/2023 3:30:27 PM ah3914 HALFF W:\AUS\36000s\36179\0022\CADD\Sheets\AUSWXS-SHEETS-36179.dgn

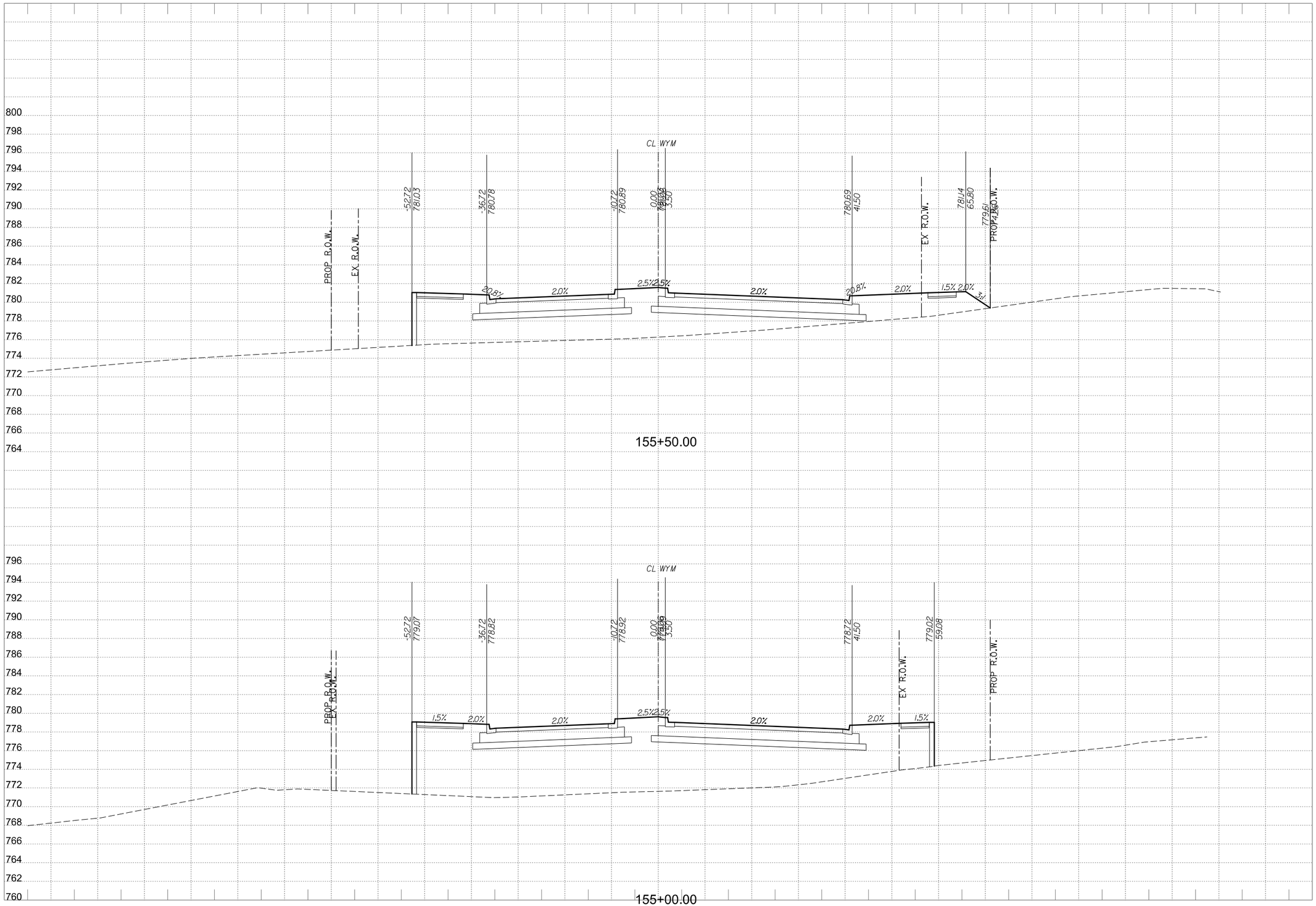

WYOMING SPRINGS
SEGMENT 1
Round Rock, Texas

HALFF
9500 AMBERGLEN BLVD
BLDG F, STE 125
AUSTIN, TX 78729
TEL (512) 777-4600
FAX (512) 252-8141

Revision No.	Date	Description

FOR INFORMATION ONLY

CROSS SECTIONS SHOULD NOT BE USED FOR CONSTRUCTION PURPOSES. REFER TO INFORMATION IN CONSTRUCTION PLANS.

0 5 10 15 20
HORIZONTAL SCALE IN FEET

0 5 10
VERTICAL SCALE IN FEET

Project No.:	36179
Issued:	4/14/2023
Drawn By:	JP
Checked By:	JN
Scale:	AS NOTED

Sheet Title
PROPOSED CROSS SECTIONS

553
Sheet Number

Design PDF_2D_MON_HW_MR_300.plt
4/14/2023 3:30:28 PM ah3914 HALFF W:\AUS\36000s\36179002\CADD\Sheets\AUS\XS-SHEETS-36179.dgn

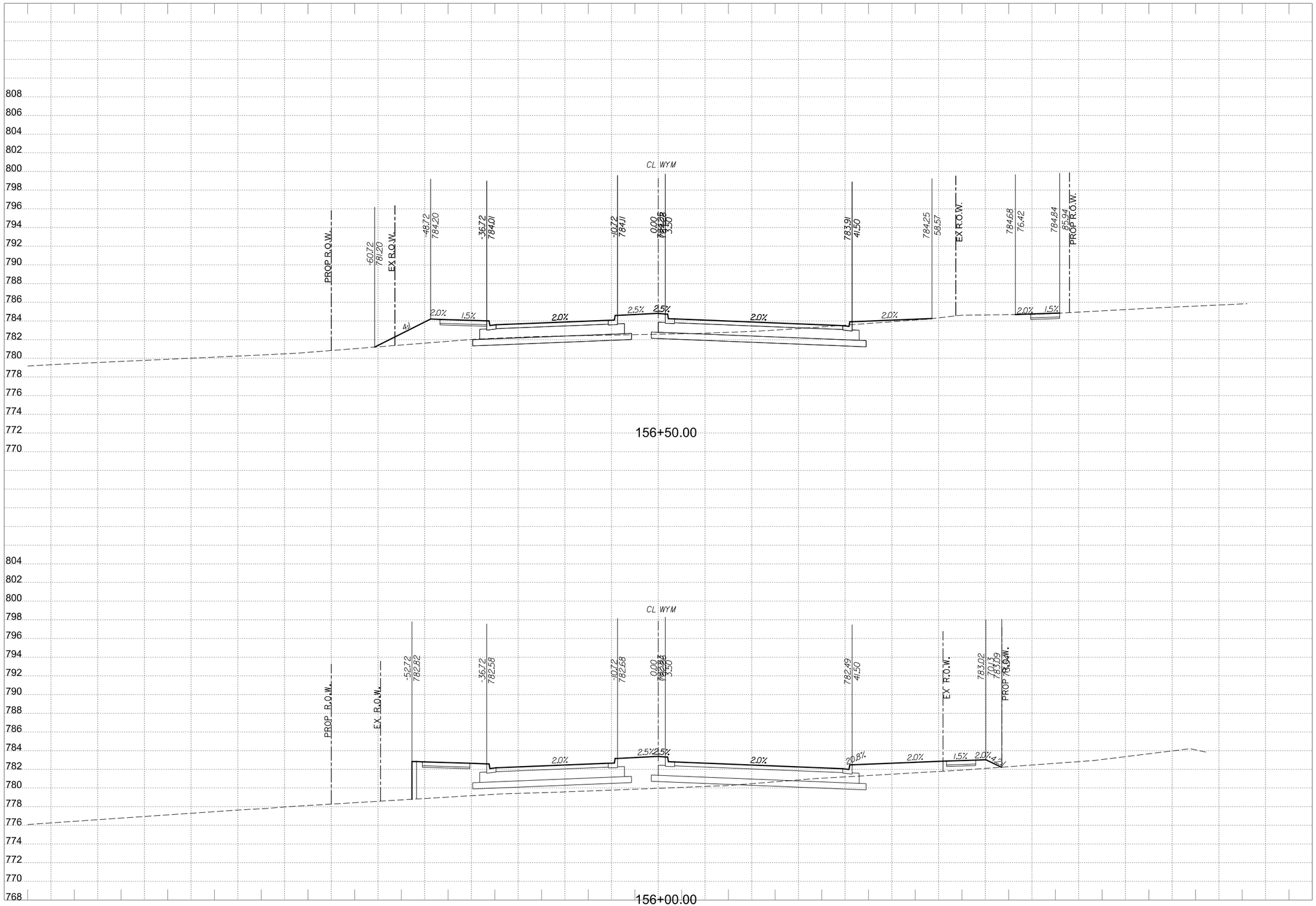

WYOMING SPRINGS
SEGMENT 1
Round Rock, Texas

HALFF
9500 AMBERGLEN BLVD
BLDG F, STE 125
AUSTIN, TX 78729
TEL (512) 777-4600
FAX (512) 252-8141

Revision No.	Date	Description

FOR INFORMATION ONLY

CROSS SECTIONS SHOULD NOT BE USED FOR CONSTRUCTION PURPOSES. REFER TO INFORMATION IN CONSTRUCTION PLANS.

0 5 10 15 20
HORIZONTAL SCALE IN FEET

0 5 10
VERTICAL SCALE IN FEET

Project No.:	36179
Issued:	4/14/2023
Drawn By:	JP
Checked By:	JN
Scale:	AS NOTED

Sheet Title
PROPOSED CROSS SECTIONS

554
Sheet Number

Design
PDF_2D_MON_HW_MR_300.plt
4/14/2023 3:30:30 PM ah3914 HALFF W:\AUS\36000s\36179002\CADD\Sheets\AUSXS-SHEETS-36179.dgn

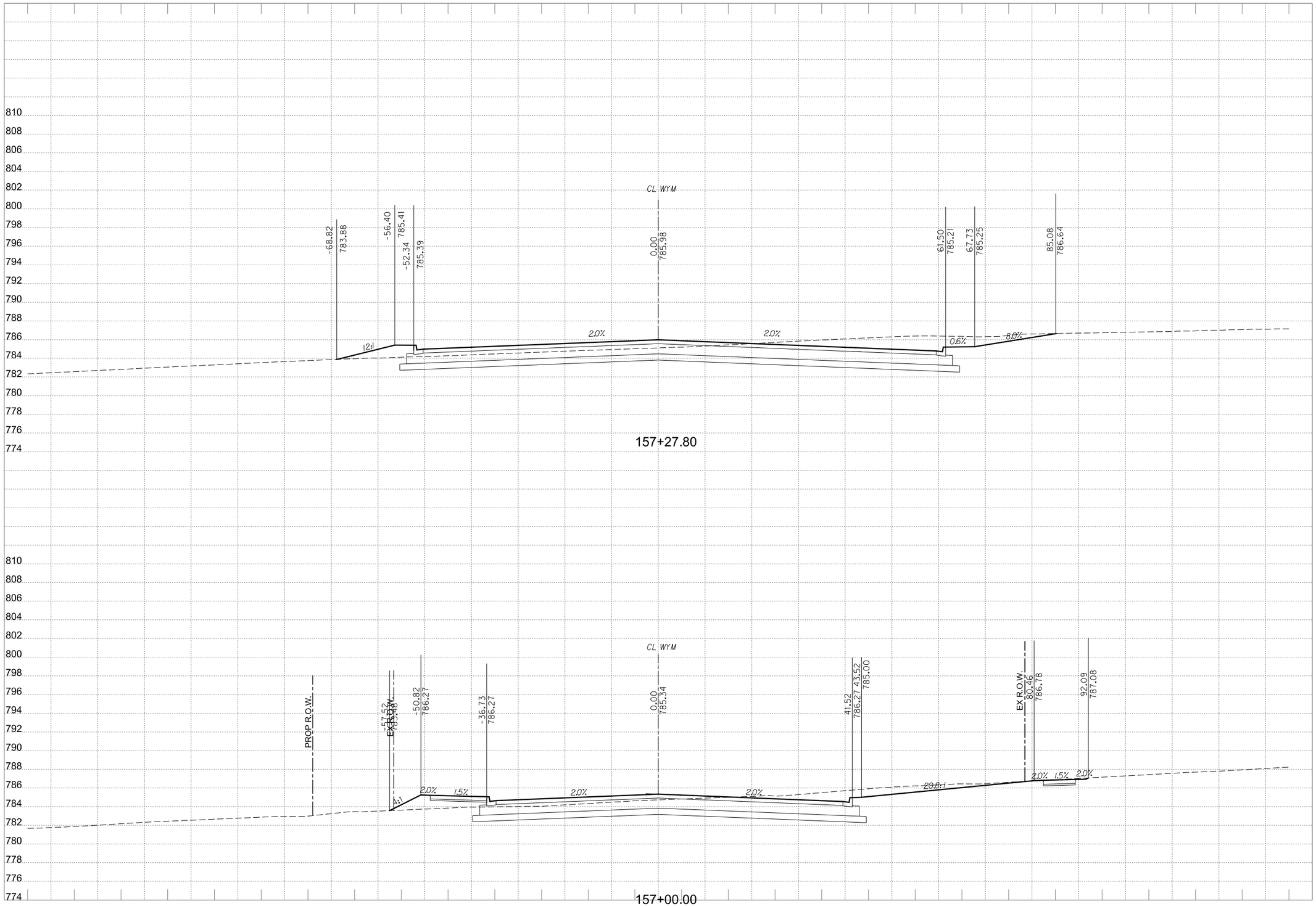

WYOMING SPRINGS
SEGMENT 1
Round Rock, Texas

HALFF
9500 AMBERGLEN BLVD
BLDG F, STE 125
AUSTIN, TX 78729
TEL (512) 777-4600
FAX (512) 252-8141

Revision No.	Date	Description
.	.	.
.	.	.
.	.	.
.	.	.
.	.	.
.	.	.
.	.	.
.	.	.

FOR INFORMATION ONLY

CROSS SECTIONS SHOULD NOT BE USED FOR CONSTRUCTION PURPOSES. REFER TO INFORMATION IN CONSTRUCTION PLANS.

0 5 10 15 20
HORIZONTAL SCALE IN FEET

0 5 10
VERTICAL SCALE IN FEET

Project No.:	36179
Issued:	4/14/2023
Drawn By:	JP
Checked By:	JN
Scale:	AS NOTED

Sheet Title

PROPOSED CROSS SECTIONS

555

Sheet Number

Design
PDF_2D_MON_HW_MR_300.plt
W:\AUS\36000s\36179002\CADD\Sheets\AUS\XS-SHEETS-36179.dgn
ah3914 HALFF
3:30:31 PM
4/14/2023

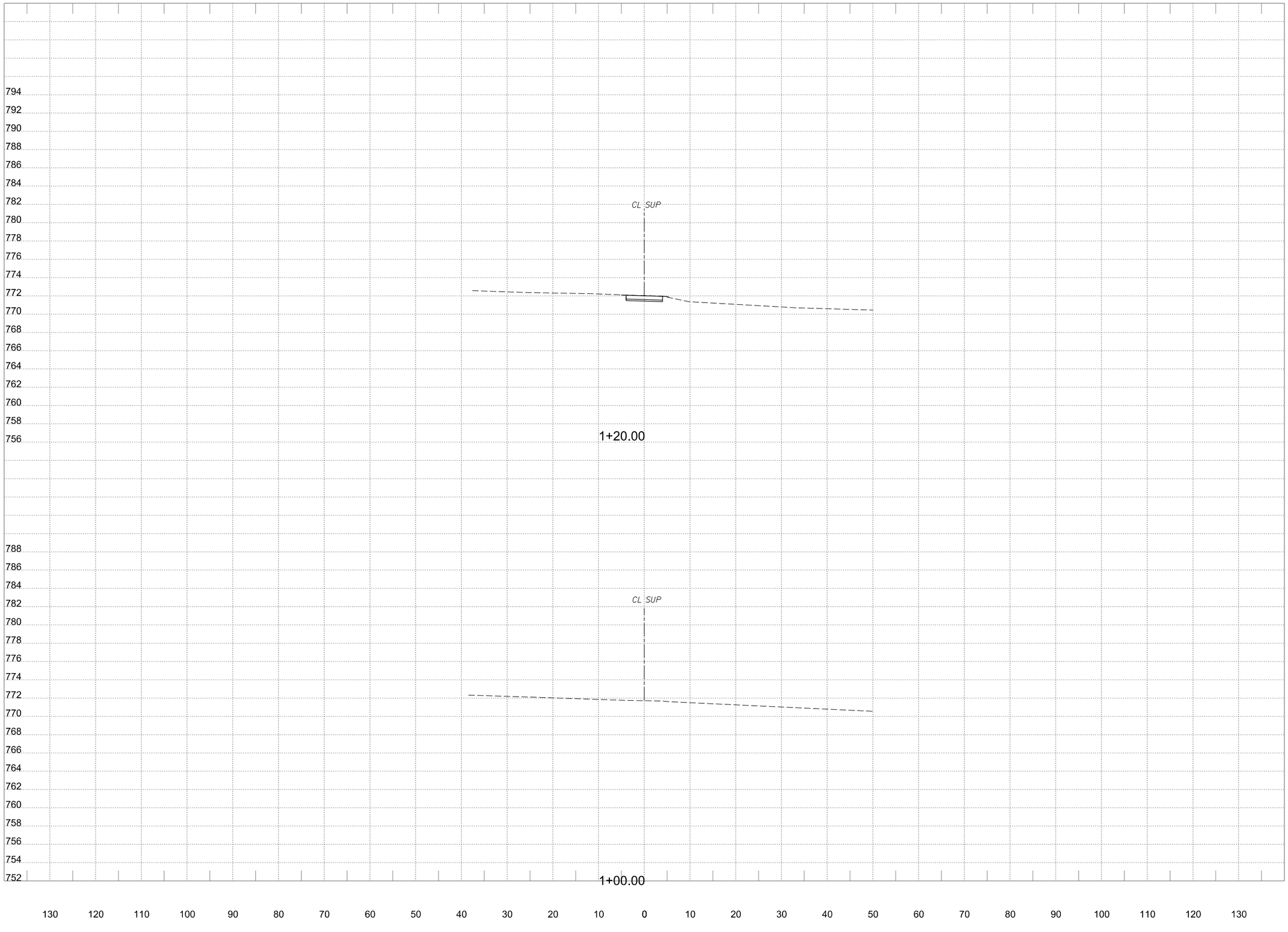

PDF_2D_MON_HW_MR_300.plt

Design

4/14/2023 3:30:32 PM ah3914 HALFF W:\AUS\36000s\36179\0022\CADD\Sheets\AUSWXS-SHEETS-SUP-36179.dgn

WYOMING SPRINGS

SEGMENT 1

Round Rock, Texas

HALFF

9500 AMBERGLEN BLVD
BLDG F, STE 125
AUSTIN, TX 78729
TEL (512) 777-4600
FAX (512) 252-8141

Revision No.	Date	Description

FOR INFORMATION ONLY

CROSS SECTIONS SHOULD NOT BE USED FOR CONSTRUCTION PURPOSES. REFER TO INFORMATION IN CONSTRUCTION PLANS.

0 5 10 15 20
HORIZONTAL SCALE IN FEET

0 5 10
VERTICAL SCALE IN FEET

Project No.:	36179
Issued:	4/14/2023
Drawn By:	JP
Checked By:	JN
Scale:	AS NOTED

Sheet Title

PROPOSED CROSS SECTIONS

556

Sheet Number

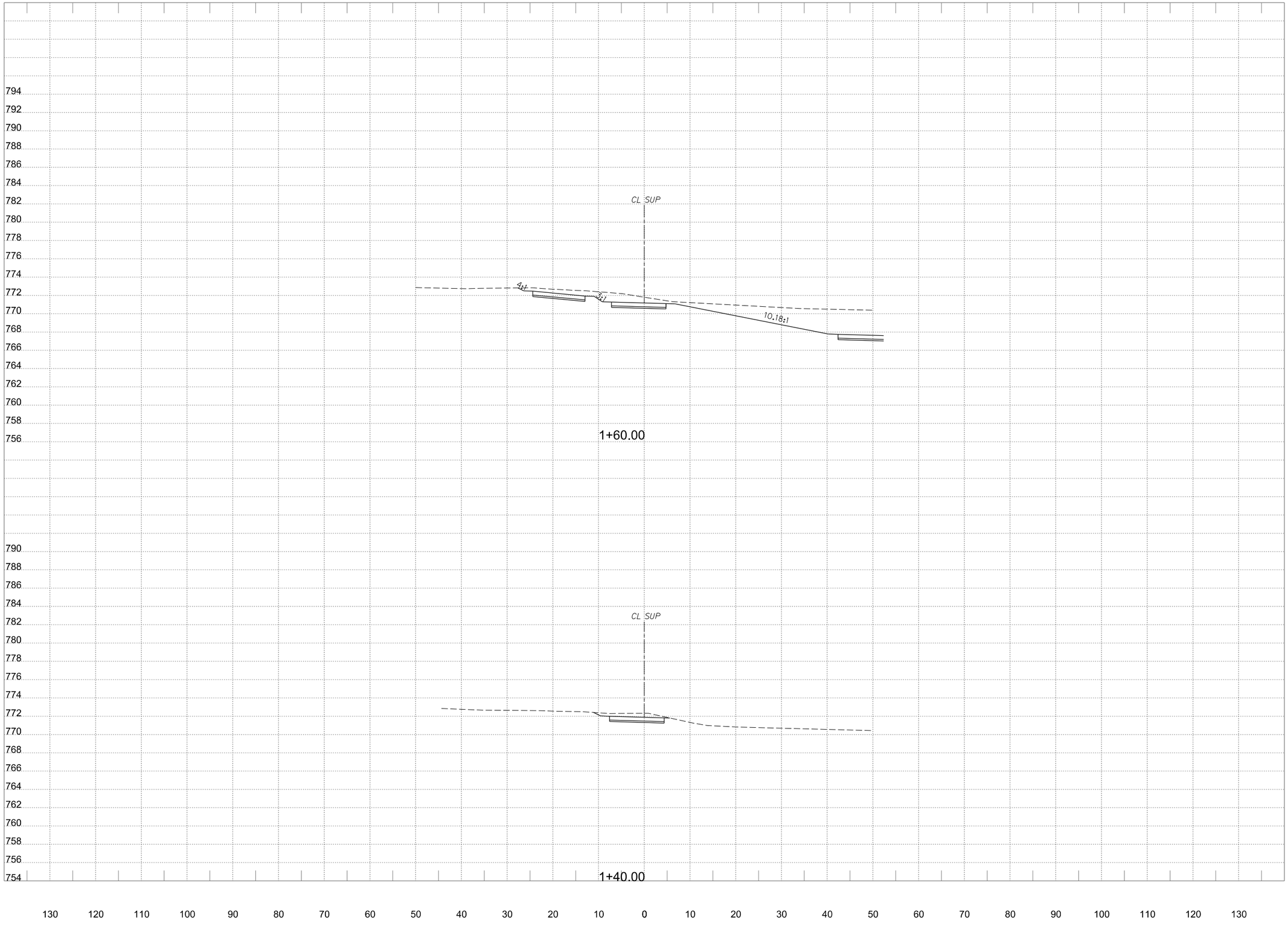

WYOMING SPRINGS
SEGMENT 1
Round Rock, Texas

HALFF
9500 AMBERGLEN BLVD
BLDG F, STE 125
AUSTIN, TX 78729
TEL (512) 777-4600
FAX (512) 252-8141

Revision No.	Date	Description

FOR INFORMATION ONLY

CROSS SECTIONS SHOULD NOT BE USED FOR CONSTRUCTION PURPOSES. REFER TO INFORMATION IN CONSTRUCTION PLANS.

0 5 10 15 20
HORIZONTAL SCALE IN FEET

0 5 10
VERTICAL SCALE IN FEET

Project No.:	36179
Issued:	4/14/2023
Drawn By:	JP
Checked By:	JN
Scale:	AS NOTED

Sheet Title
PROPOSED CROSS SECTIONS

557
Sheet Number

Design PDF_2D_MON_HW_MR_300.plt
4/14/2023 3:30:33 PM ah3914 HALFF W:\AUS\36000s\36179\0022\CADD\Sheets\AUSWXS-SHEETS-SUP-36179.dgn

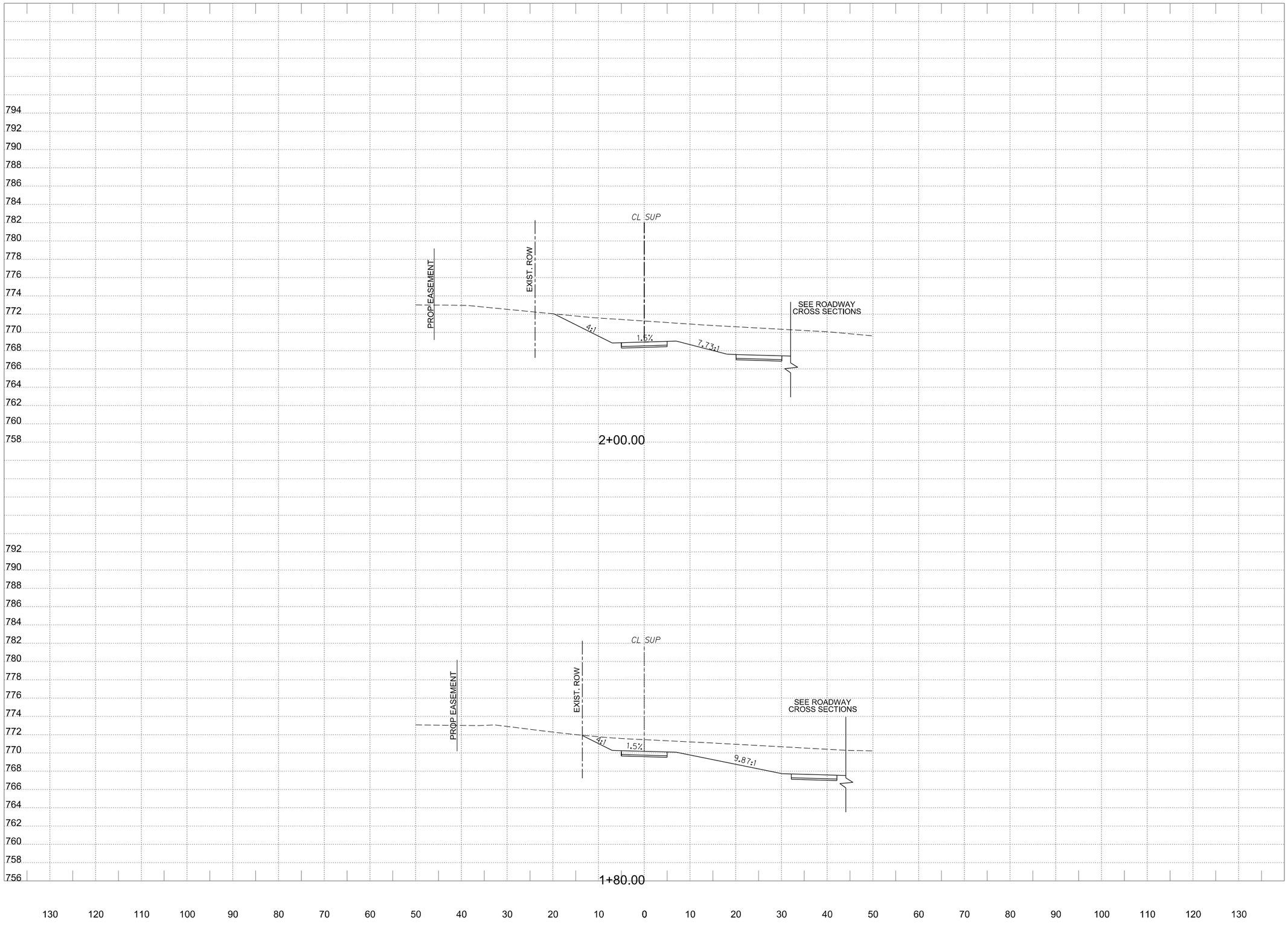

Design
PDF_2D_MON_HW_MR_300.plt
W:\AUS\36000s\36179002\CADD\Sheets\AUSWXS-SHEETS-SUP-36179.dgn
4/14/2023 3:30:33 PM ah3914 HALFF

WYOMING SPRINGS

SEGMENT 1
Round Rock, Texas

HALFF
9500 AMBERGLEN BLVD
BLDG F, STE 125
AUSTIN, TX 78729
TEL (512) 777-4600
FAX (512) 252-8141

Revision No.	Date	Description

FOR INFORMATION ONLY

CROSS SECTIONS SHOULD NOT BE USED FOR CONSTRUCTION PURPOSES. REFER TO INFORMATION IN CONSTRUCTION PLANS.

0 5 10 15 20
HORIZONTAL SCALE IN FEET

0 5 10
VERTICAL SCALE IN FEET

Project No.:	36179
Issued:	4/14/2023
Drawn By:	JP
Checked By:	JN
Scale:	AS NOTED

Sheet Title
PROPOSED
CROSS SECTIONS

558
Sheet Number

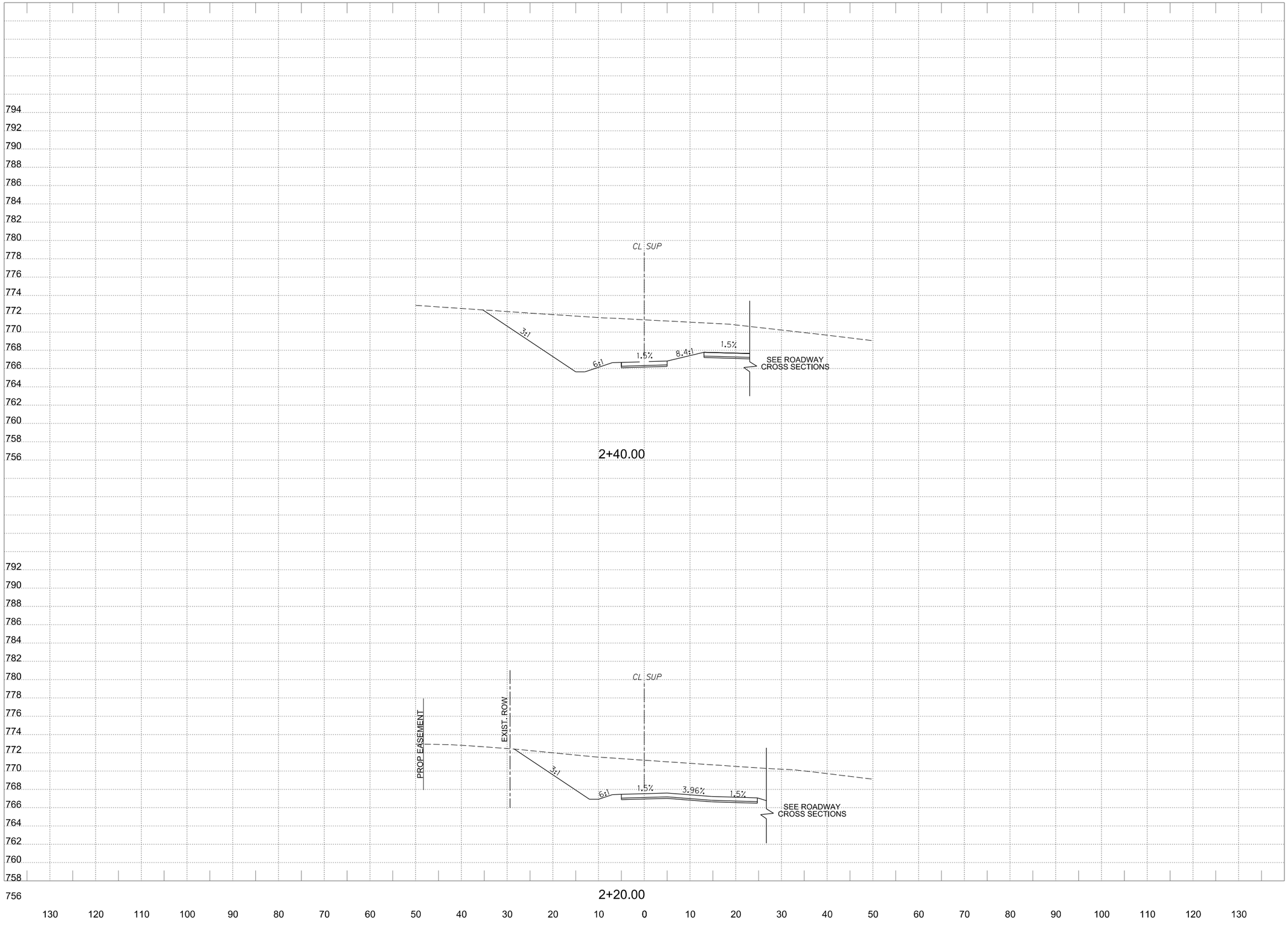

Design
PDF_2D_MON_HW_MR_300.plt
W:\AUS\36000s\36179002\CADD\Sheets\AUS\XS-SHEETS-SUP-36179.dgn
4/14/2023 3:30:34 PM ah3914 HALFF

WYOMING SPRINGS
SEGMENT 1
Round Rock, Texas

HALFF
9500 AMBERGLEN BLVD
BLDG F, STE 125
AUSTIN, TX 78729
TEL (512) 777-4600
FAX (512) 252-8141

Revision No.	Date	Description
.	.	.
.	.	.
.	.	.
.	.	.
.	.	.
.	.	.
.	.	.
.	.	.

FOR INFORMATION ONLY

CROSS SECTIONS SHOULD NOT BE USED FOR CONSTRUCTION PURPOSES. REFER TO INFORMATION IN CONSTRUCTION PLANS.

0 5 10 15 20
HORIZONTAL SCALE IN FEET

0 5 10
VERTICAL SCALE IN FEET

Project No.:	36179
Issued:	4/14/2023
Drawn By:	JP
Checked By:	JN
Scale:	AS NOTED

Sheet Title
PROPOSED
CROSS SECTIONS

559
Sheet Number

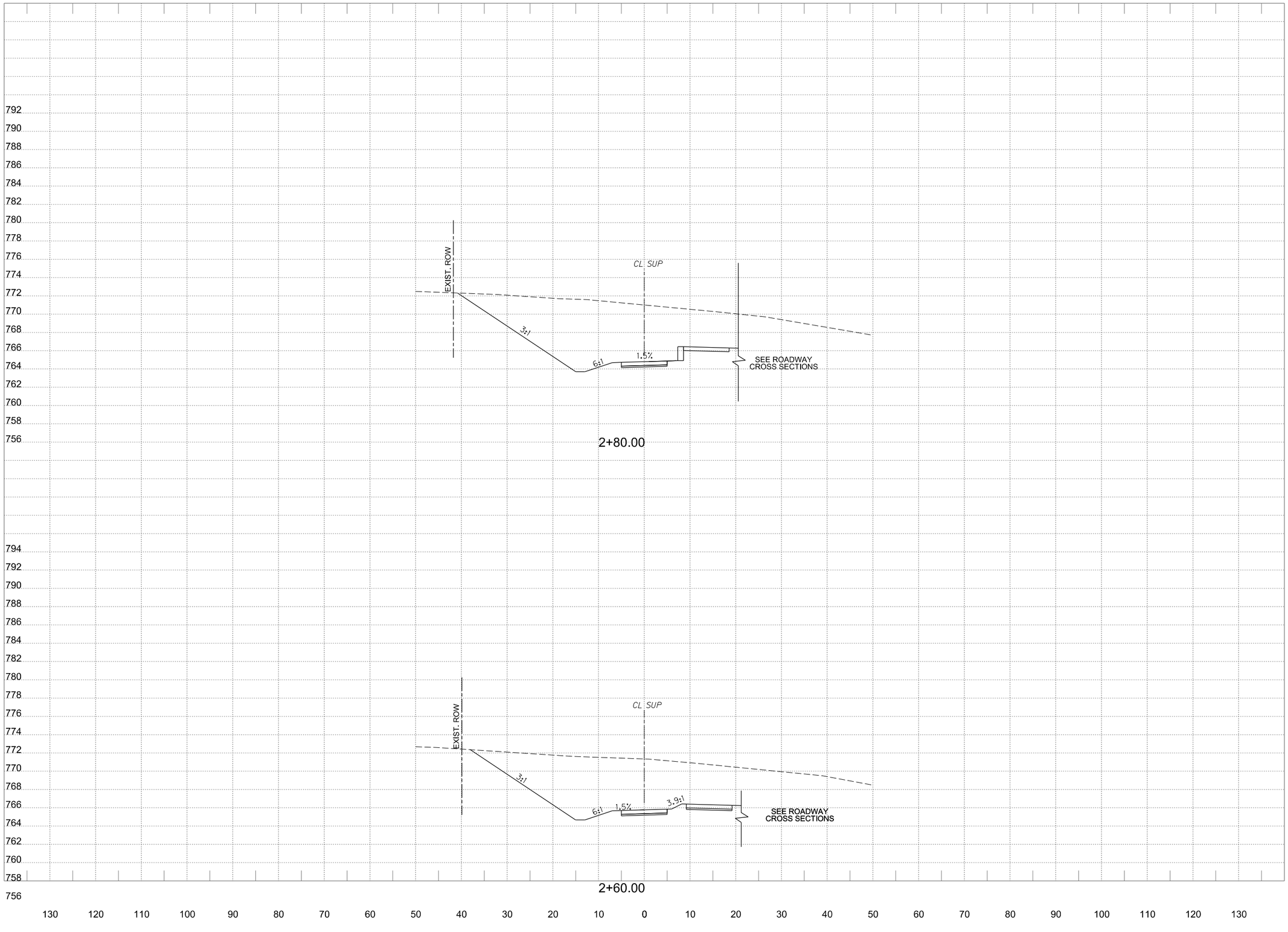

WYOMING SPRINGS
SEGMENT 1
Round Rock, Texas

HALFF
9500 AMBERGLEN BLVD
BLDG F, STE 125
AUSTIN, TX 78729
TEL (512) 777-4600
FAX (512) 252-8141

Revision No.	Date	Description

FOR INFORMATION ONLY

CROSS SECTIONS SHOULD NOT BE USED FOR CONSTRUCTION PURPOSES. REFER TO INFORMATION IN CONSTRUCTION PLANS.

0 5 10 15 20
HORIZONTAL SCALE IN FEET

0 5 10
VERTICAL SCALE IN FEET

Project No.:	36179
Issued:	4/14/2023
Drawn By:	JP
Checked By:	JN
Scale:	AS NOTED

Sheet Title
PROPOSED
CROSS SECTIONS

560
Sheet Number

Design
PDF_2D_MON_HW_MR_300.plt
W:\AUS\36000s\36179\0022\CADD\Sheets\AUS\XS-SHEETS-SUP-36179.dgn
4/14/2023 3:30:34 PM ah3914 HALFF

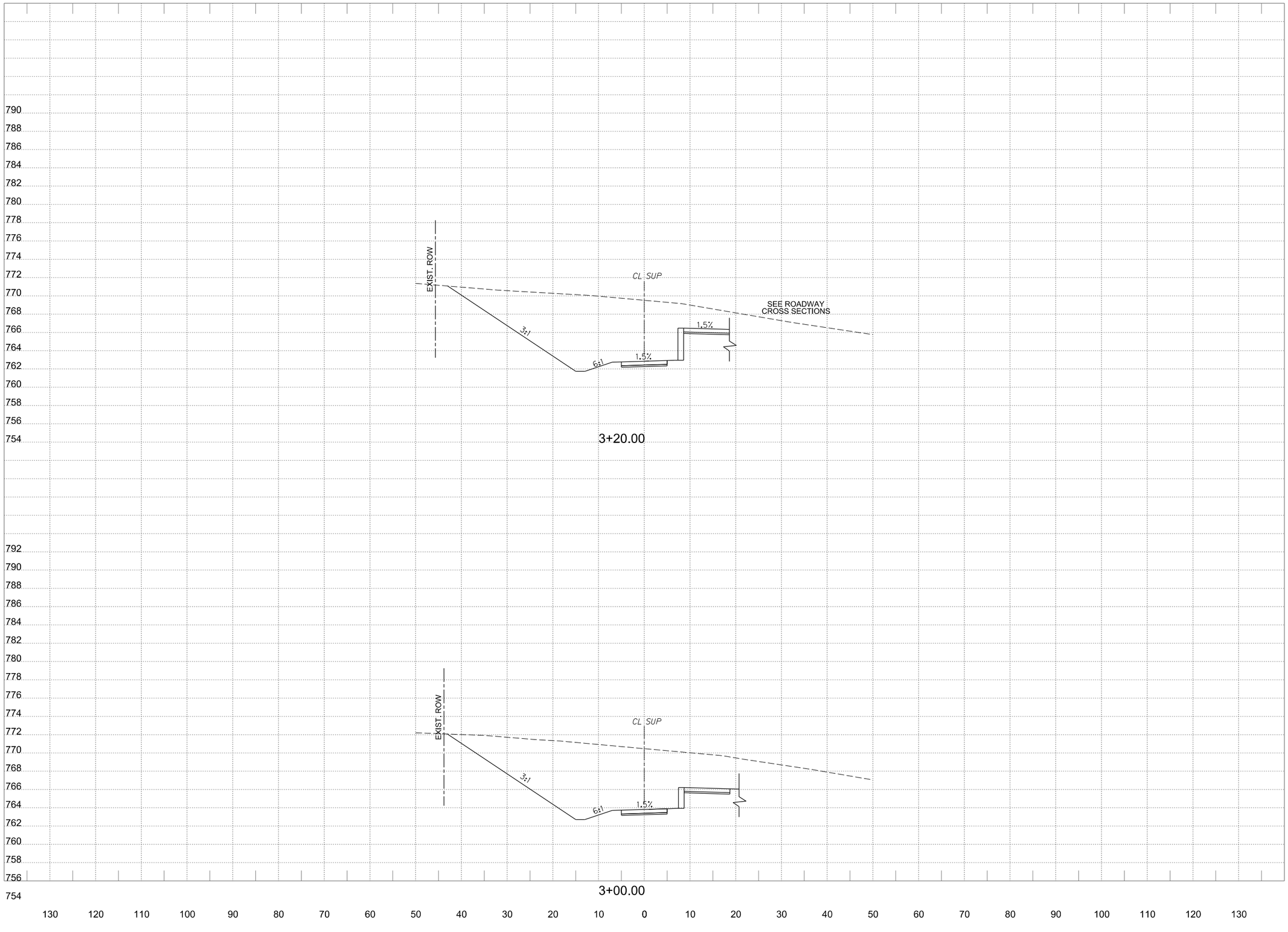

WYOMING SPRINGS
SEGMENT 1
Round Rock, Texas

HALFF
9500 AMBERGLEN BLVD
BLDG F, STE 125
AUSTIN, TX 78729
TEL (512) 777-4600
FAX (512) 252-8141

Revision No.	Date	Description

FOR INFORMATION ONLY

CROSS SECTIONS SHOULD NOT BE USED FOR CONSTRUCTION PURPOSES. REFER TO INFORMATION IN CONSTRUCTION PLANS.

0 5 10 15 20
HORIZONTAL SCALE IN FEET

0 5 10
VERTICAL SCALE IN FEET

Project No.:	36179
Issued:	4/14/2023
Drawn By:	JP
Checked By:	JN
Scale:	AS NOTED

Sheet Title
PROPOSED
CROSS SECTIONS

561
Sheet Number

Design PDF_2D_MON_HW_MR_300.plt
4/14/2023 3:30:34 PM ah3914 HALFF W:\AUS\36000s\36179002\CADD\Sheets\AUSWXS-SHEETS-SUP-36179.dgn

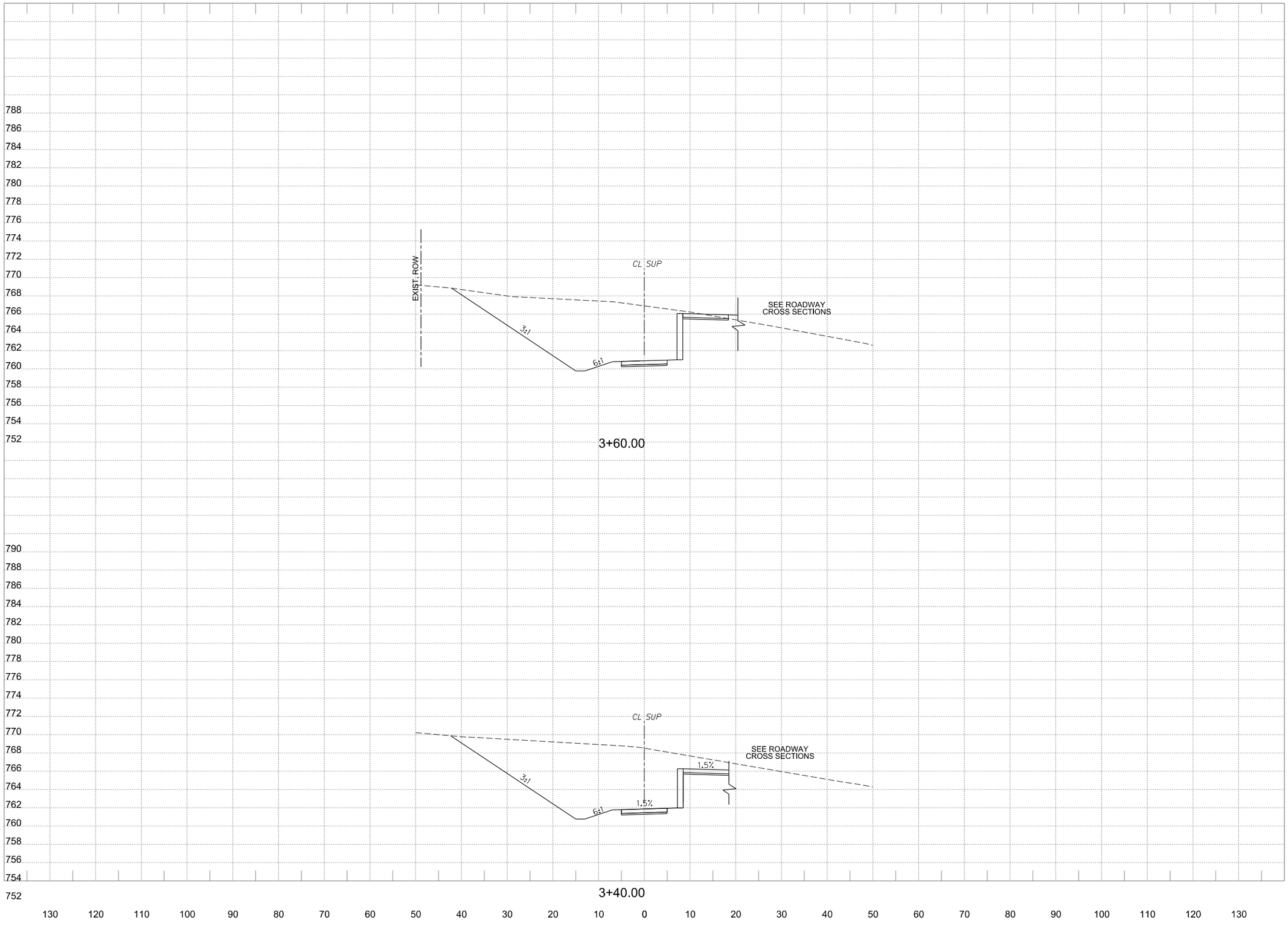

PDF_2D_MON_HW_MR_300.plt
Design
W:\AUS\36000s\36179002\CADD\Sheets\AUSWXS-SHEETS-SUP-36179.dgn
4/14/2023 3:30:35 PM ah3914 HALFF

WYOMING SPRINGS

SEGMENT 1

Round Rock, Texas

HALFF

9500 AMBERGLEN BLVD
BLDG F, STE 125
AUSTIN, TX 78729
TEL (512) 777-4600
FAX (512) 252-8141

Revision No.	Date	Description

FOR INFORMATION ONLY

CROSS SECTIONS SHOULD NOT BE USED FOR CONSTRUCTION PURPOSES. REFER TO INFORMATION IN CONSTRUCTION PLANS.

0 5 10 15 20
HORIZONTAL SCALE IN FEET

0 5 10
VERTICAL SCALE IN FEET

Project No.:	36179
Issued:	4/14/2023
Drawn By:	JP
Checked By:	JN
Scale:	AS NOTED

Sheet Title

PROPOSED
CROSS SECTIONS

562

Sheet Number

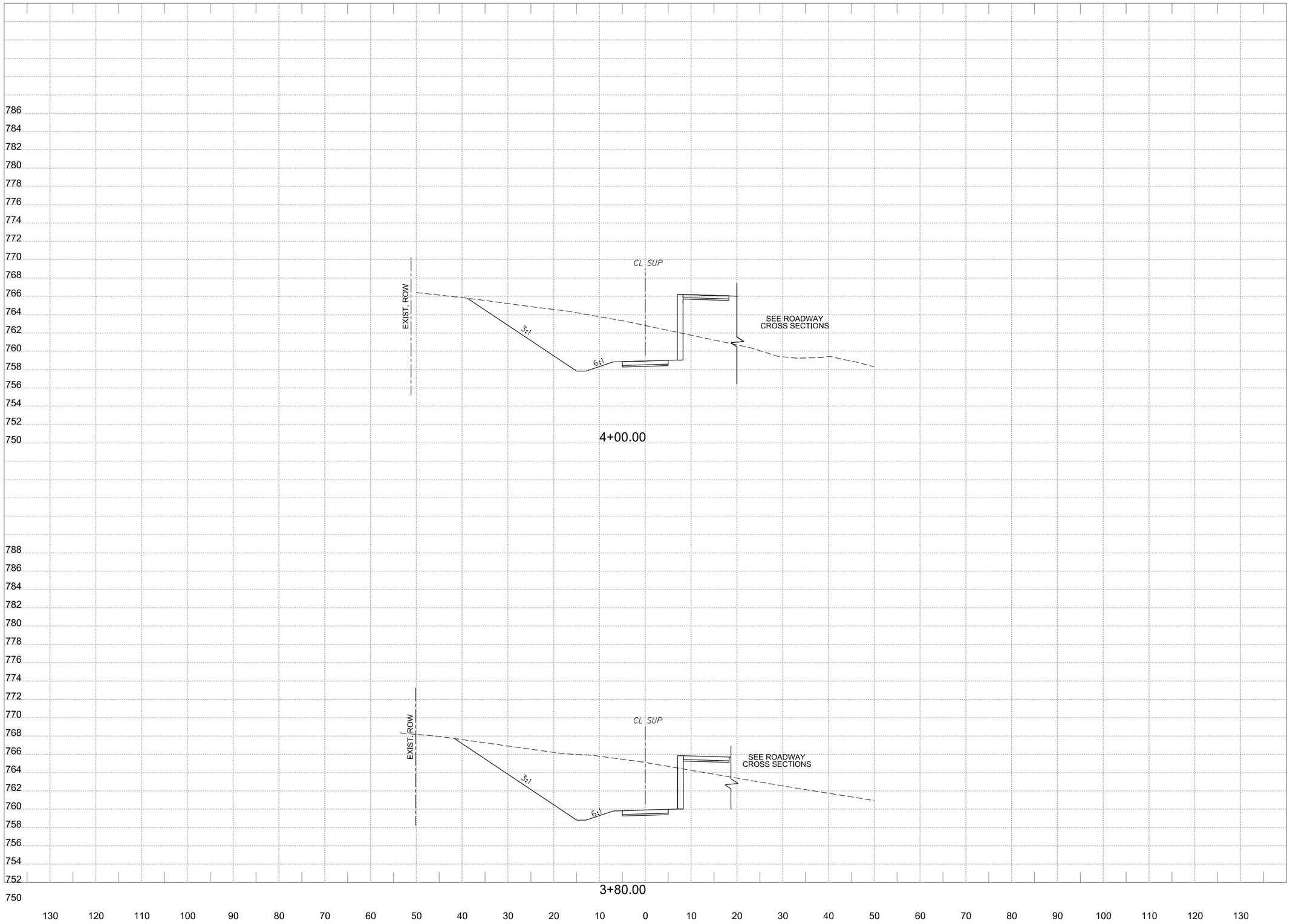

PDF_2D_MON_HW_MR_300.plt

Design

4/14/2023 3:30:35 PM ah3914 HALFF W:\AUS\36000s\36179002\CADD\Sheets\AUS\XS-SHEETS-SUP-36179.dgn

WYOMING SPRINGS

SEGMENT 1

Round Rock, Texas

HALFF
9500 AMBERGLEN BLVD
BLDG F, STE 125
AUSTIN, TX 78729
TEL (512) 777-4600
FAX (512) 252-8141

Revision No.	Date	Description

FOR INFORMATION ONLY

CROSS SECTIONS SHOULD NOT BE USED FOR CONSTRUCTION PURPOSES. REFER TO INFORMATION IN CONSTRUCTION PLANS.

0 5 10 15 20
HORIZONTAL SCALE IN FEET

0 5 10
VERTICAL SCALE IN FEET

Project No.:	36179
Issued:	4/14/2023
Drawn By:	JP
Checked By:	JN
Scale:	AS NOTED

Sheet Title

PROPOSED
CROSS SECTIONS

563

Sheet Number

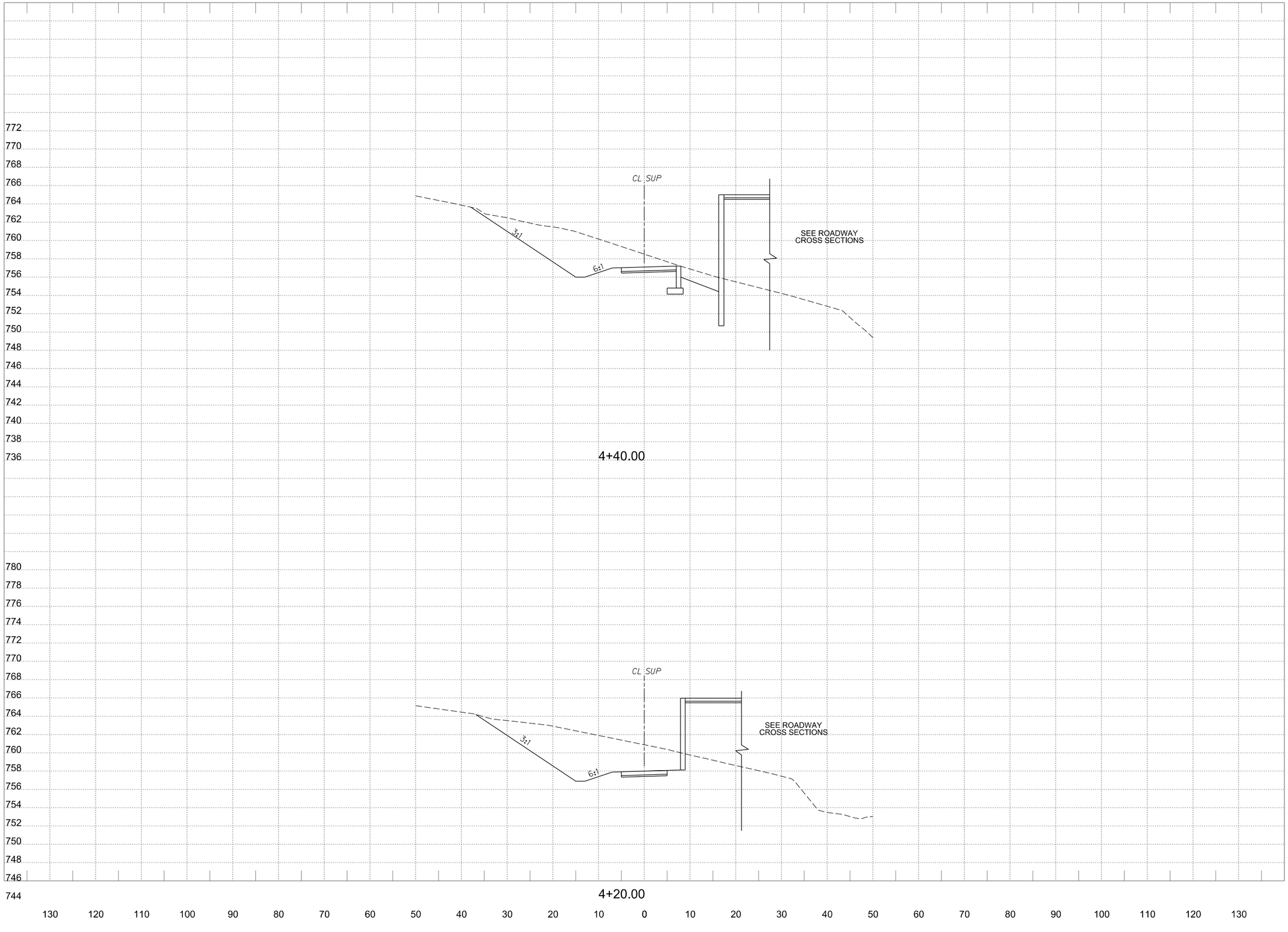

PDF_2D_MON_HW_MR_300.plt
Design
W:\AUS\36000s\36179002\CADD\Sheets\AUSWXS-SHEETS-SUP-36179.dgn
ah3914 HALFF
3:30:36 PM
4/14/2023

WYOMING SPRINGS
SEGMENT 1
Round Rock, Texas

HALFF
9500 AMBERGLEN BLVD
BLDG F, STE 125
AUSTIN, TX 78729
TEL (512) 777-4600
FAX (512) 252-8141

Revision No.	Date	Description
.	.	.
.	.	.
.	.	.
.	.	.
.	.	.
.	.	.
.	.	.
.	.	.

FOR INFORMATION ONLY

CROSS SECTIONS SHOULD NOT BE USED FOR CONSTRUCTION PURPOSES. REFER TO INFORMATION IN CONSTRUCTION PLANS.

0 5 10 15 20
HORIZONTAL SCALE IN FEET

0 5 10
VERTICAL SCALE IN FEET

Project No.:	36179
Issued:	4/14/2023
Drawn By:	JP
Checked By:	JN
Scale:	AS NOTED

Sheet Title
PROPOSED
CROSS SECTIONS

564
Sheet Number

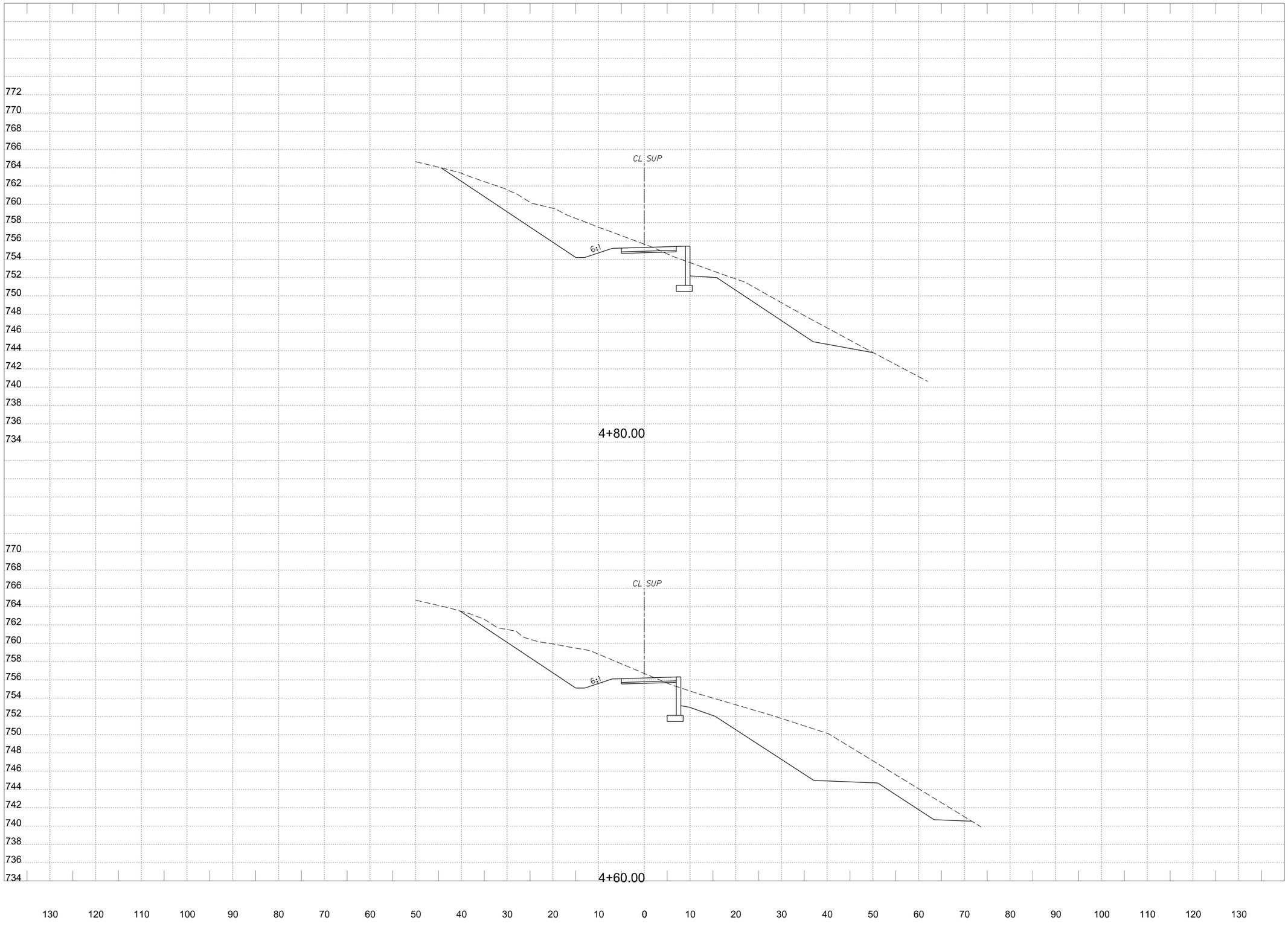

WYOMING SPRINGS
SEGMENT 1
Round Rock, Texas

HALFF
9500 AMBERGLEN BLVD
BLDG F, STE 125
AUSTIN, TX 78729
TEL (512) 777-4600
FAX (512) 252-8141

Revision No.	Date	Description

FOR INFORMATION ONLY

CROSS SECTIONS SHOULD NOT BE USED FOR CONSTRUCTION PURPOSES. REFER TO INFORMATION IN CONSTRUCTION PLANS.

0 5 10 15 20
HORIZONTAL SCALE IN FEET

0 5 10
VERTICAL SCALE IN FEET

Project No.:	36179
Issued:	4/14/2023
Drawn By:	JP
Checked By:	JN
Scale:	AS NOTED

Sheet Title
PROPOSED CROSS SECTIONS

565
Sheet Number

Design
PDF_2D_MON_HW_MR_300.plt
W:\AUS\36000s\36179\0022\CADD\Sheets\AUS\XS-SHEETS-SUP-36179.dgn
ah3914 HALFF
3:30:36 PM
4/14/2023

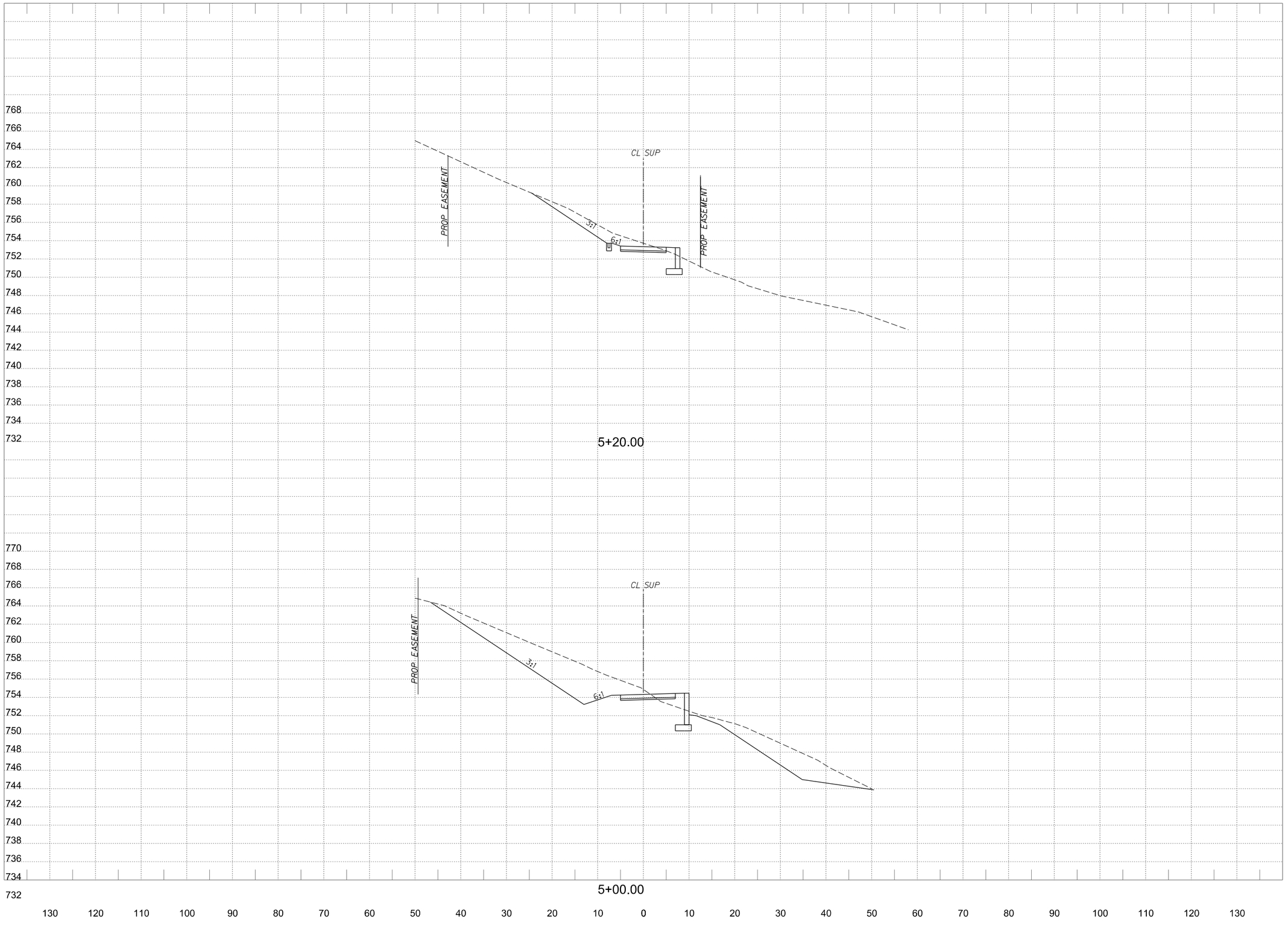

WYOMING SPRINGS
SEGMENT 1
Round Rock, Texas

HALFF
9500 AMBERGLEN BLVD
BLDG F, STE 125
AUSTIN, TX 78729
TEL (512) 777-4600
FAX (512) 252-8141

Revision No.	Date	Description

FOR INFORMATION ONLY

CROSS SECTIONS SHOULD NOT BE USED FOR CONSTRUCTION PURPOSES. REFER TO INFORMATION IN CONSTRUCTION PLANS.

0 5 10 15 20
HORIZONTAL SCALE IN FEET

0 5 10
VERTICAL SCALE IN FEET

Project No.:	36179
Issued:	4/14/2023
Drawn By:	JP
Checked By:	JN
Scale:	AS NOTED

Sheet Title
PROPOSED CROSS SECTIONS

566
Sheet Number

Design
PDF_2D_MON_HW_MR_300.plt
4/14/2023 3:30:37 PM ah3914 HALFF W:\AUS\36000s\36179\0022\CADD\Sheets\AUS\XS-SHEETS-SUP-36179.dgn

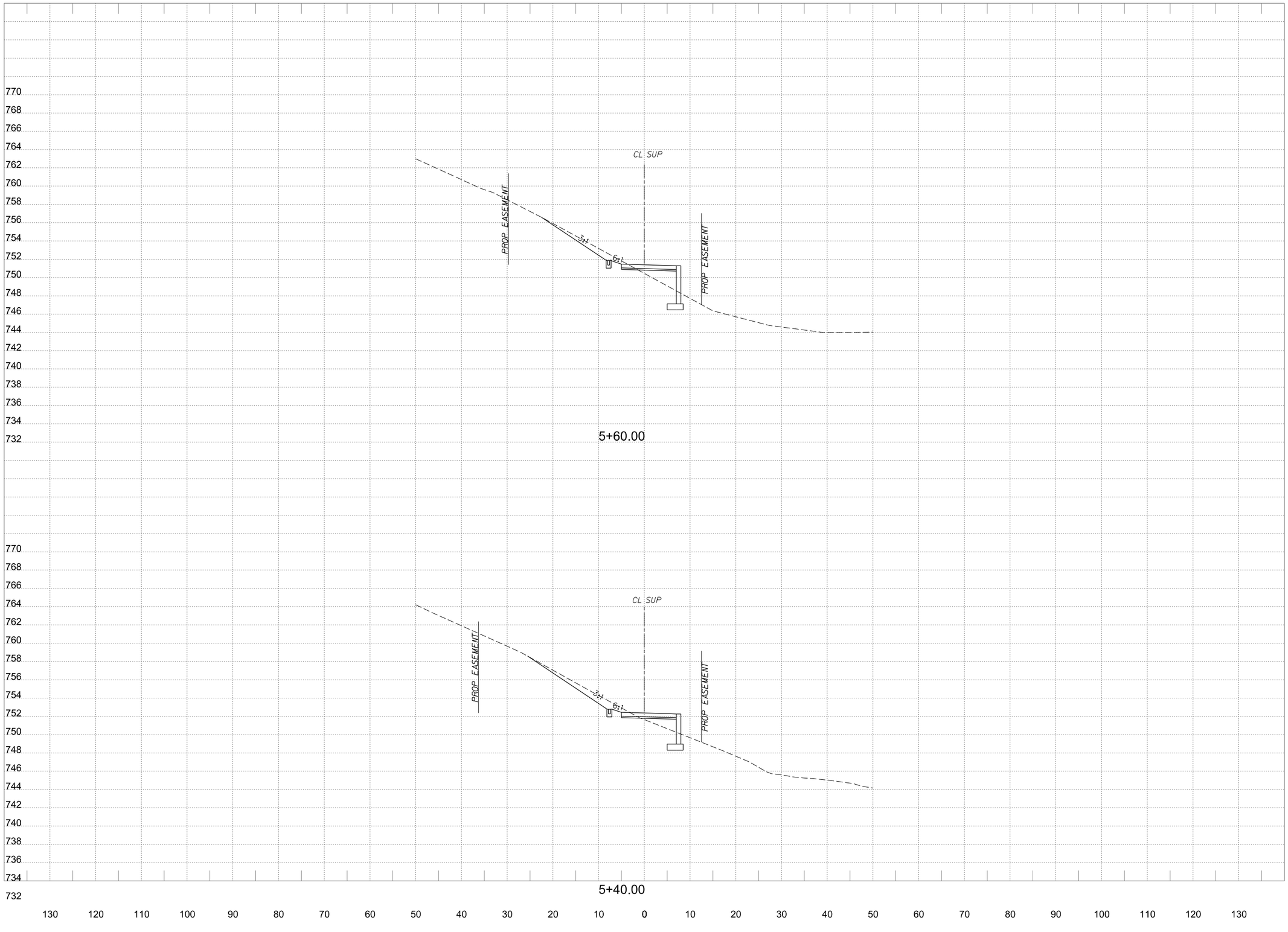

WYOMING SPRINGS

SEGMENT 1

Round Rock, Texas

HALFF

9500 AMBERGLEN BLVD
BLDG F, STE 125
AUSTIN, TX 78729
TEL (512) 777-4600
FAX (512) 252-8141

Revision No.	Date	Description

FOR INFORMATION ONLY

CROSS SECTIONS SHOULD NOT BE USED FOR CONSTRUCTION PURPOSES. REFER TO INFORMATION IN CONSTRUCTION PLANS.

0 5 10 15 20
HORIZONTAL SCALE IN FEET

0 5 10
VERTICAL SCALE IN FEET

Project No.:	36179
Issued:	4/14/2023
Drawn By:	JP
Checked By:	JN
Scale:	AS NOTED

Sheet Title

PROPOSED CROSS SECTIONS

567

Sheet Number

Design PDF_2D_MON_HW_MR_300.plt
4/14/2023 3:30:37 PM ah3914 HALFF W:\AUS\36000s\36179\0022\CADD\Sheets\AUSWXS-SHEETS-SUP-36179.dgn

WYOMING SPRINGS

SEGMENT 1

Round Rock, Texas

HALFF

9500 AMBERGLEN BLVD
BLDG F, STE 125
AUSTIN, TX 78729
TEL (512) 777-4600
FAX (512) 252-8141

Revision No.	Date	Description

FOR INFORMATION ONLY

CROSS SECTIONS SHOULD NOT BE USED FOR CONSTRUCTION PURPOSES. REFER TO INFORMATION IN CONSTRUCTION PLANS.

0 5 10 15 20
HORIZONTAL SCALE IN FEET

0 5 10
VERTICAL SCALE IN FEET

Project No.:	36179
Issued:	4/14/2023
Drawn By:	JP
Checked By:	JN
Scale:	AS NOTED

Sheet Title

PROPOSED CROSS SECTIONS

568

Sheet Number

Design PDF_2D_MON_HW_MR_300.plt
4/14/2023 3:30:38 PM ah3914 HALFF W:\AUS\36000s\36179\0022\CADD\Sheets\AUSWXS-SHEETS-SUP-36179.dgn

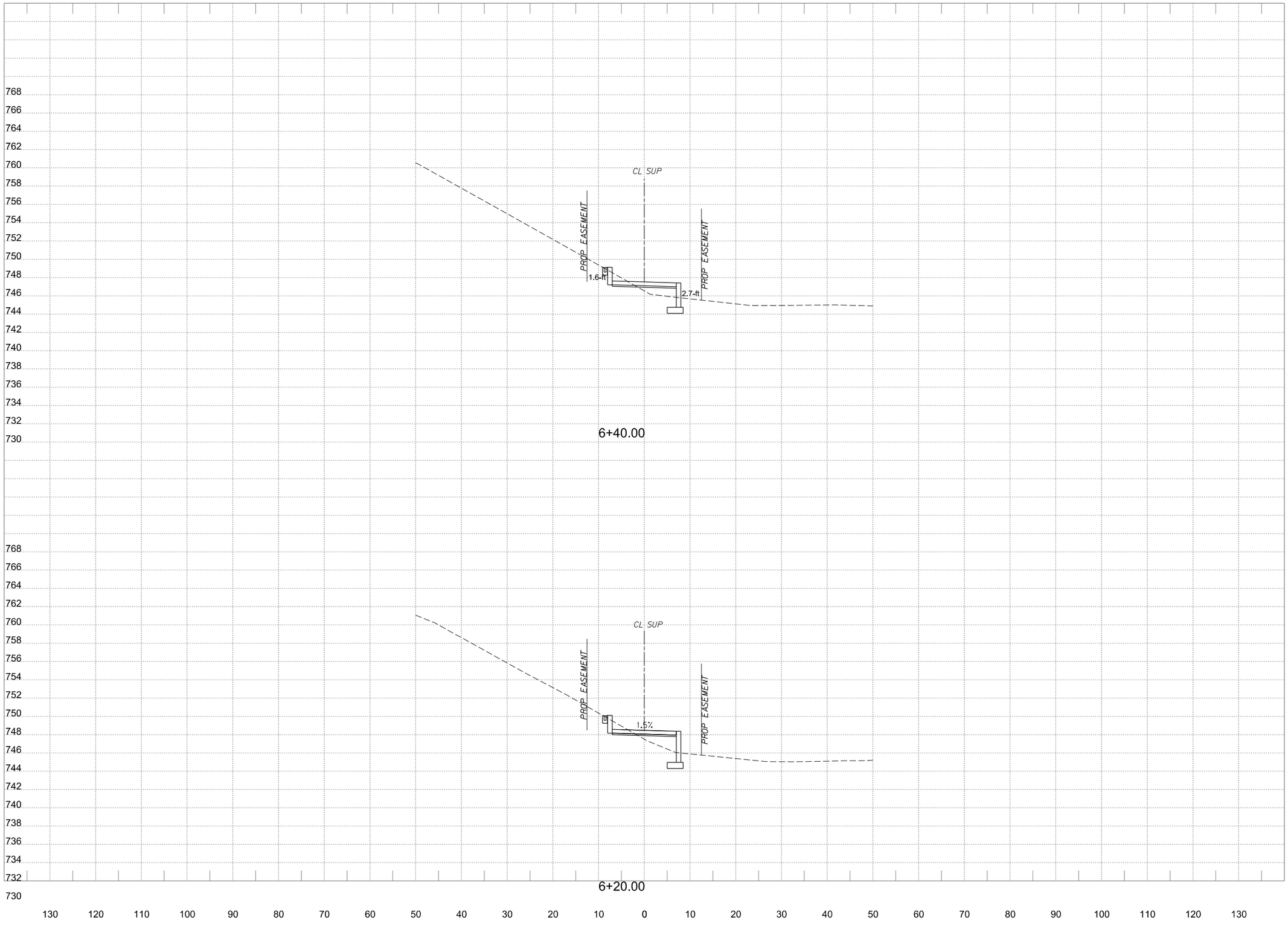

WYOMING SPRINGS
SEGMENT 1
Round Rock, Texas

HALFF
9500 AMBERGLEN BLVD
BLDG F, STE 125
AUSTIN, TX 78729
TEL (512)777-4600
FAX (512) 252-8141

Revision No.	Date	Description

FOR INFORMATION ONLY

CROSS SECTIONS SHOULD NOT BE USED FOR CONSTRUCTION PURPOSES. REFER TO INFORMATION IN CONSTRUCTION PLANS.

0 5 10 15 20
HORIZONTAL SCALE IN FEET

0 5 10
VERTICAL SCALE IN FEET

Project No.:	36179
Issued:	4/14/2023
Drawn By:	JP
Checked By:	JN
Scale:	AS NOTED

Sheet Title
PROPOSED CROSS SECTIONS

569
Sheet Number

Design PDF_2D_MON_HW_MR_300.plt
4/14/2023 3:30:38 PM ah3914 HALFF W:\AUS\36000s\36179\0022\CADD\Sheets\AUSWXS-SHEETS-SUP-36179.dgn

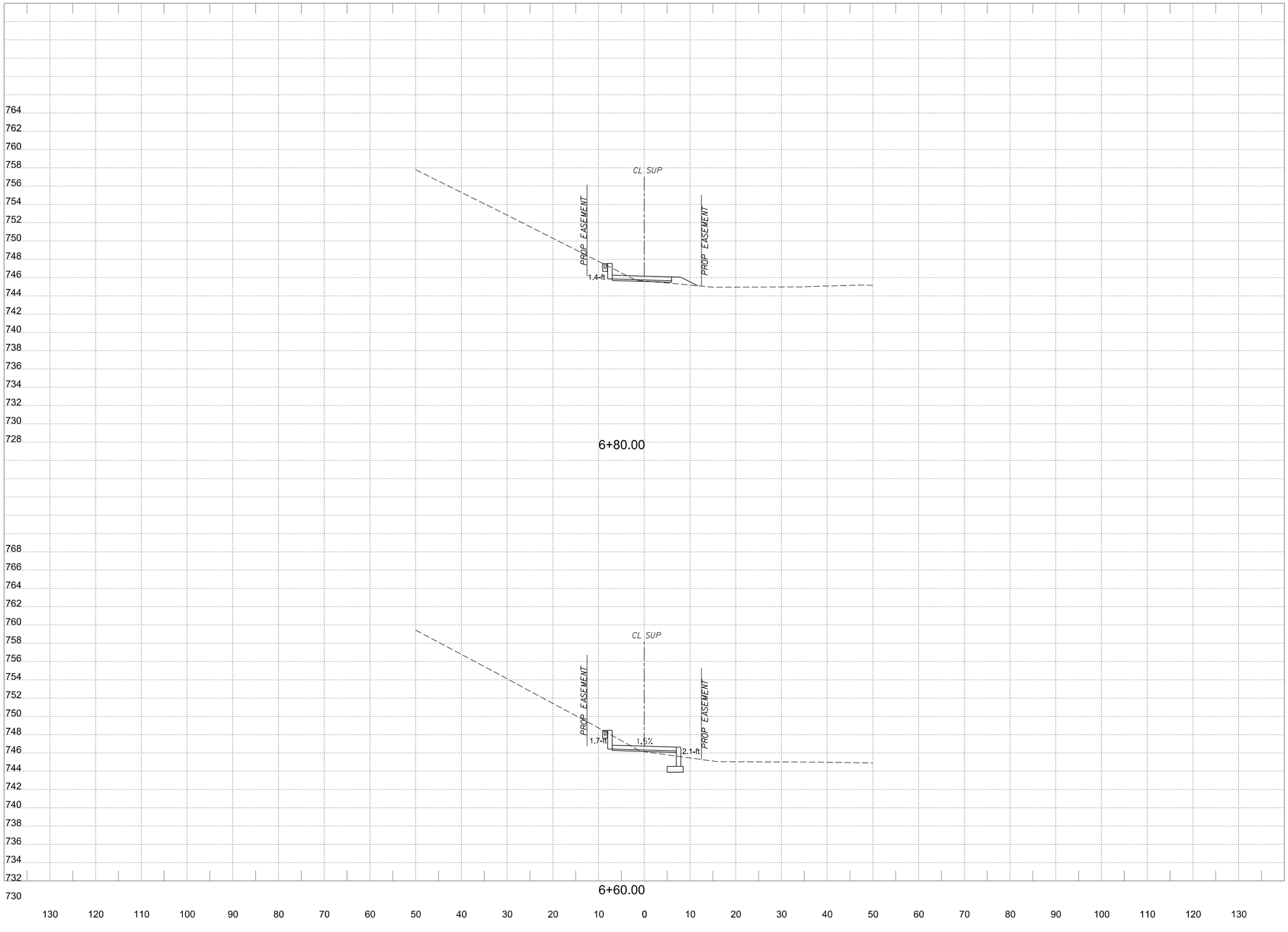

Design PDF_2D_MON_HW_MR_300.plt
4/14/2023 3:30:39 PM ah3914 HALFF W:\AUS\36000s\36179002\CADD\Sheets\AUS\XS-SHEETS-SUP-36179.dgn

WYOMING SPRINGS
SEGMENT 1
Round Rock, Texas

HALFF
9500 AMBERGLEN BLVD
BLDG F, STE 125
AUSTIN, TX 78729
TEL (512) 777-4600
FAX (512) 252-8141

Revision No.	Date	Description

FOR INFORMATION ONLY

CROSS SECTIONS SHOULD NOT BE USED FOR CONSTRUCTION PURPOSES. REFER TO INFORMATION IN CONSTRUCTION PLANS.

0 5 10 15 20
HORIZONTAL SCALE IN FEET

0 5 10
VERTICAL SCALE IN FEET

Project No.:	36179
Issued:	4/14/2023
Drawn By:	JP
Checked By:	JN
Scale:	AS NOTED

Sheet Title
PROPOSED CROSS SECTIONS

570
Sheet Number

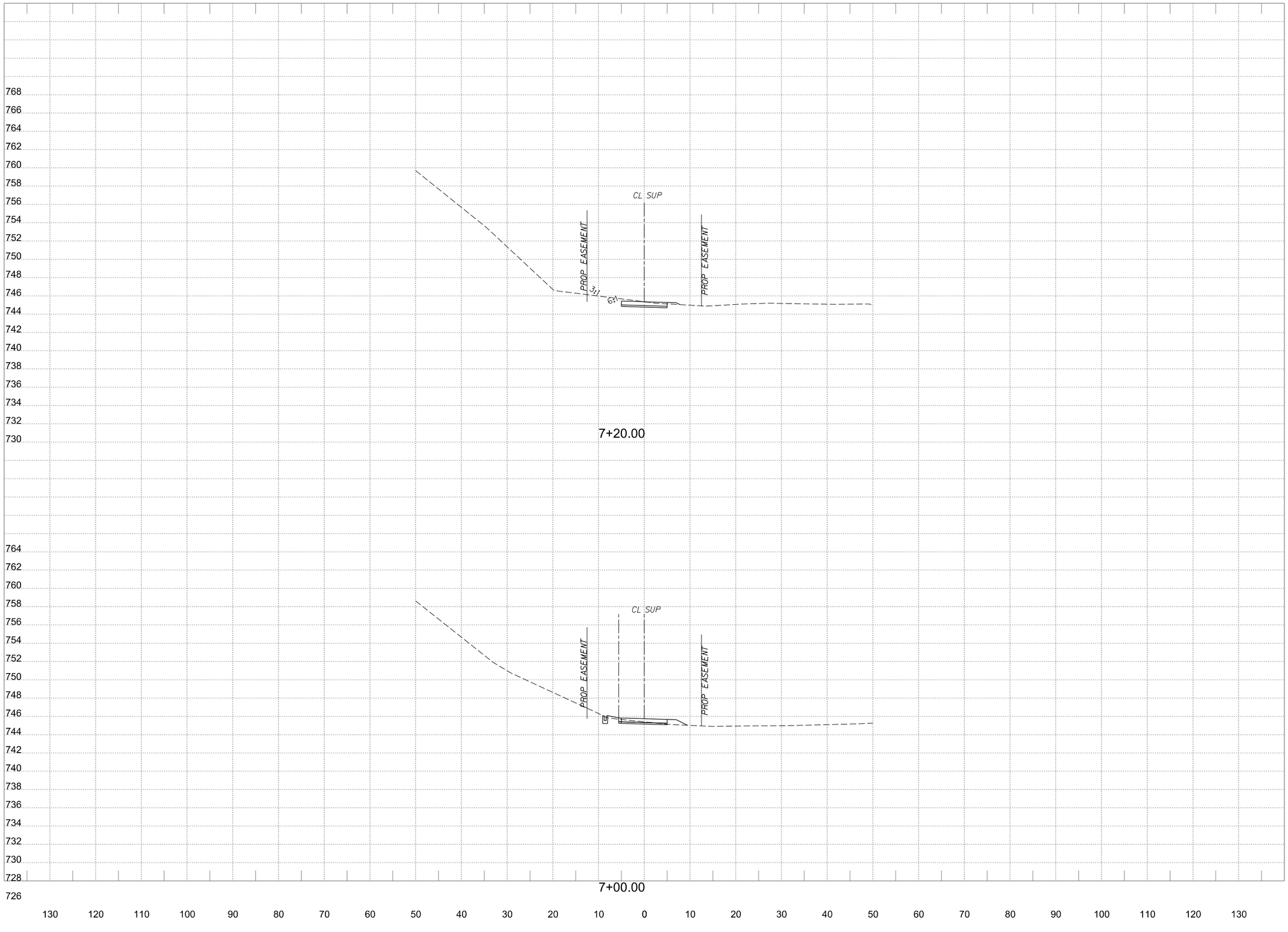

PDF_2D_MON_HW_MR_300.plt
Design
W:\AUS\36000s\36179\0022\CADD\Sheets\AUSWXS-SHEETS-SUP-36179.dgn
4/14/2023 3:30:39 PM ah3914 HALFF

WYOMING SPRINGS

SEGMENT 1
Round Rock, Texas

HALFF
9500 AMBERGLEN BLVD
BLDG F, STE 125
AUSTIN, TX 78729
TEL (512) 777-4600
FAX (512) 252-8141

Revision No.	Date	Description

FOR INFORMATION ONLY

CROSS SECTIONS SHOULD NOT BE USED FOR CONSTRUCTION PURPOSES. REFER TO INFORMATION IN CONSTRUCTION PLANS.

0 5 10 15 20
HORIZONTAL SCALE IN FEET

0 5 10
VERTICAL SCALE IN FEET

Project No.:	36179
Issued:	4/14/2023
Drawn By:	JP
Checked By:	JN
Scale:	AS NOTED

Sheet Title

PROPOSED CROSS SECTIONS

571

Sheet Number

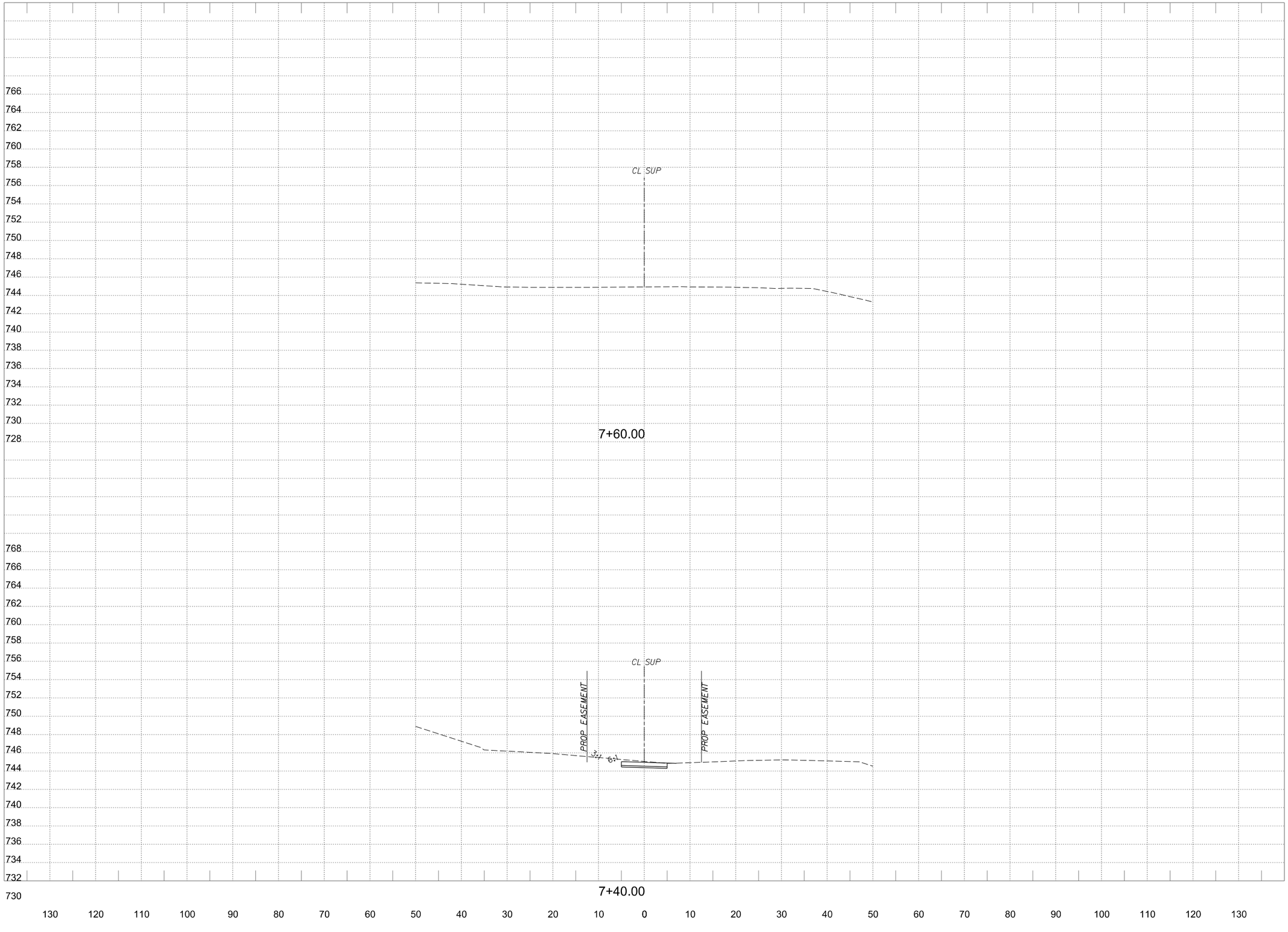

WYOMING SPRINGS
SEGMENT 1
Round Rock, Texas

HALFF
9500 AMBERGLEN BLVD
BLDG F, STE 125
AUSTIN, TX 78729
TEL (512) 777-4600
FAX (512) 252-8141

Revision No.	Date	Description
.	.	.
.	.	.
.	.	.
.	.	.
.	.	.
.	.	.
.	.	.
.	.	.

FOR INFORMATION ONLY

CROSS SECTIONS SHOULD NOT BE USED FOR CONSTRUCTION PURPOSES. REFER TO INFORMATION IN CONSTRUCTION PLANS.

0 5 10 15 20
HORIZONTAL SCALE IN FEET

0 5 10
VERTICAL SCALE IN FEET

Project No.:	36179
Issued:	4/14/2023
Drawn By:	JP
Checked By:	JN
Scale:	AS NOTED

Sheet Title
PROPOSED CROSS SECTIONS

572
Sheet Number

Design PDF_2D_MON_HW_MR_300.plt
4/14/2023 3:30:40 PM ah3914 HALFF W:\AUS\36000s\36179\0022\CADD\Sheets\AUSWXS-SHEETS-SUP-36179.dgn

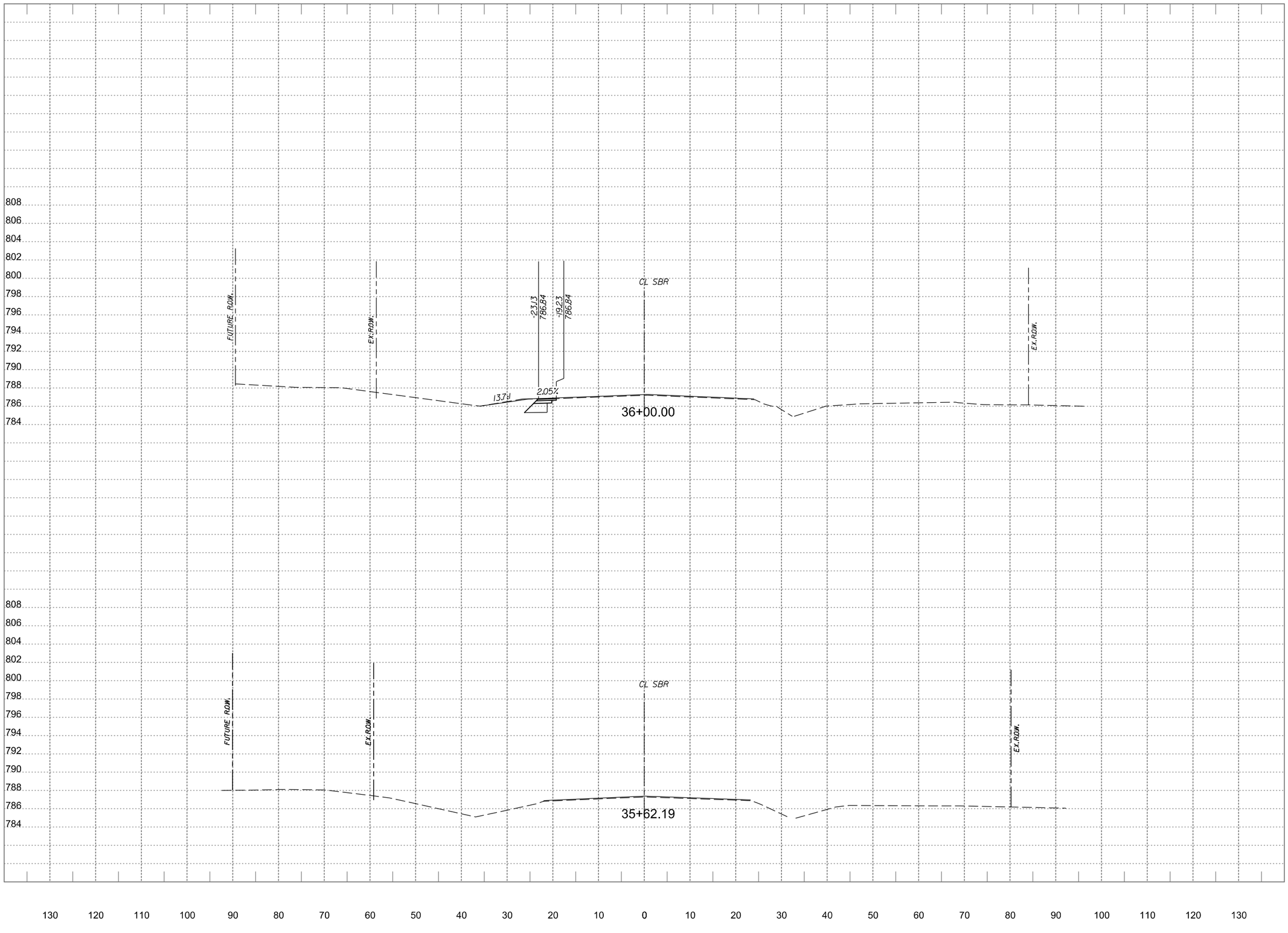

WYOMING SPRINGS

SEGMENT 1

Round Rock, Texas

halff

13620 BRIARWICK DR
BLDG C, STE 100
AUSTIN, TX 78729
(512) 777-4600
TBPELS FIRM #312

Revision		
No.	Date	Description
.	.	.
.	.	.
.	.	.
.	.	.
.	.	.
.	.	.
.	.	.

FOR INFORMATION ONLY

CROSS SECTIONS SHOULD NOT BE USED FOR CONSTRUCTION PURPOSES. REFER TO INFORMATION IN CONSTRUCTION PLANS.

0 5 10 15 20
HORIZONTAL SCALE IN FEET

0 5 10
VERTICAL SCALE IN FEET

Project No.:	36179
Issued:	4/6/2023
Drawn By:	JP
Checked By:	JN
Scale:	AS NOTED

Sheet Title

PROPOSED CROSS SECTIONS

573

Sheet Number

PDF_2D_MON_MW_MR_300.plt

Design

4/6/2023 3:58:18 PM ah1299 HALFF W:\RCH\36000s\36179\002\CADD\SheetsRCH\XS-SHEETS-36179-RCH.dgn

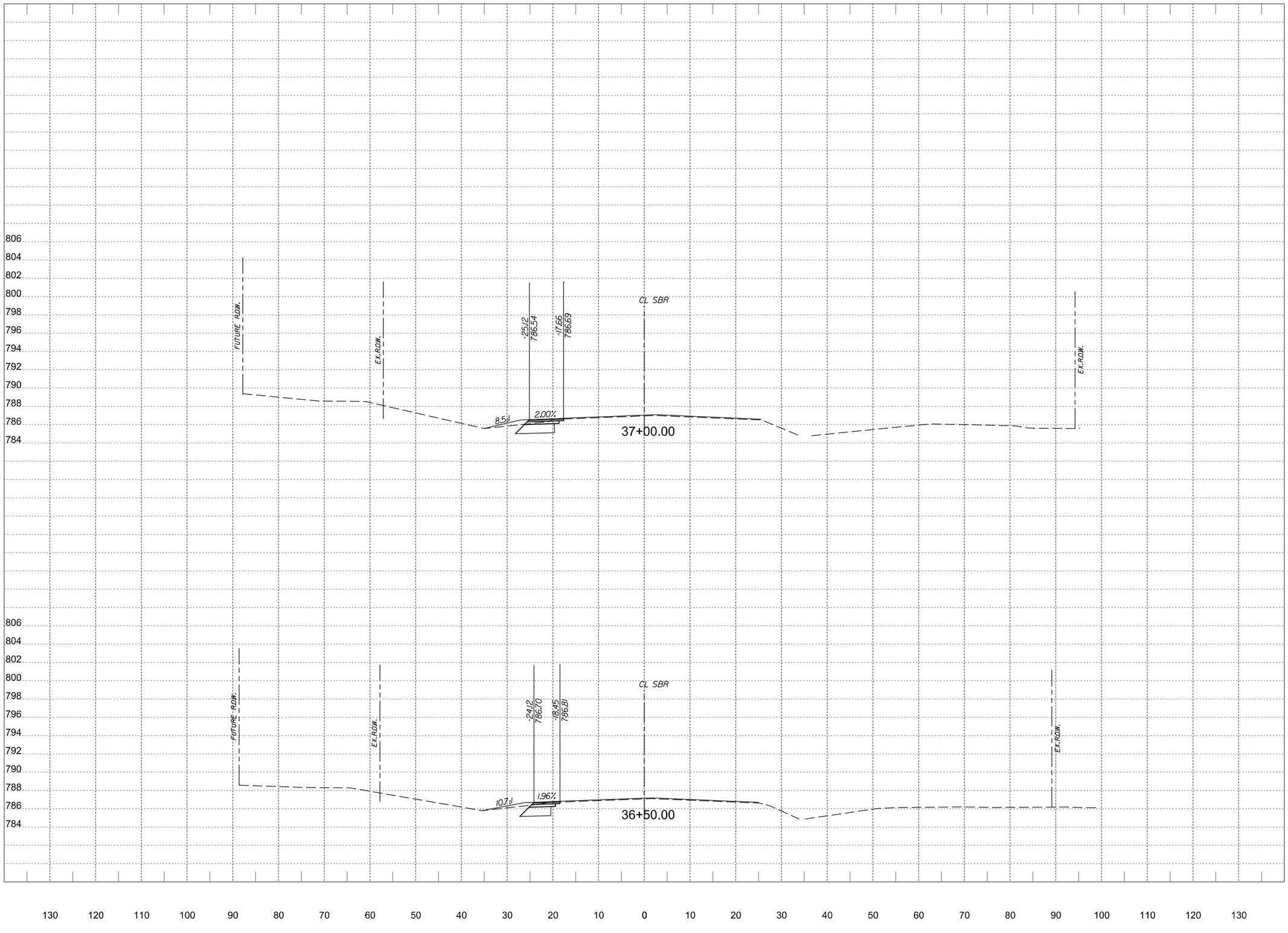

WYOMING SPRINGS

SEGMENT 1

Round Rock, Texas

halff

13620 BRIARWICK DR
BLDG C, STE 100
AUSTIN, TX 78729
(512) 777-4600
TBPELS FIRM #312

Revision		
No.	Date	Description
.	.	.
.	.	.
.	.	.
.	.	.
.	.	.
.	.	.
.	.	.

FOR INFORMATION ONLY

CROSS SECTIONS SHOULD NOT BE USED FOR CONSTRUCTION PURPOSES. REFER TO INFORMATION IN CONSTRUCTION PLANS.

0 5 10 15 20
HORIZONTAL SCALE IN FEET

0 5 10
VERTICAL SCALE IN FEET

Project No.:	36179
Issued:	4/6/2023
Drawn By:	JP
Checked By:	JN
Scale:	AS NOTED

Sheet Title

PROPOSED CROSS SECTIONS

574

Sheet Number

PDF_2D_MON_MW_MR_300.plt

Design

4/6/2023 3:58:19 PM ah1299 HALFF W:\RCH\36000s\36179\002\CADD\SheetsRCH\XS-SHEETS-36179-RCH.dgn

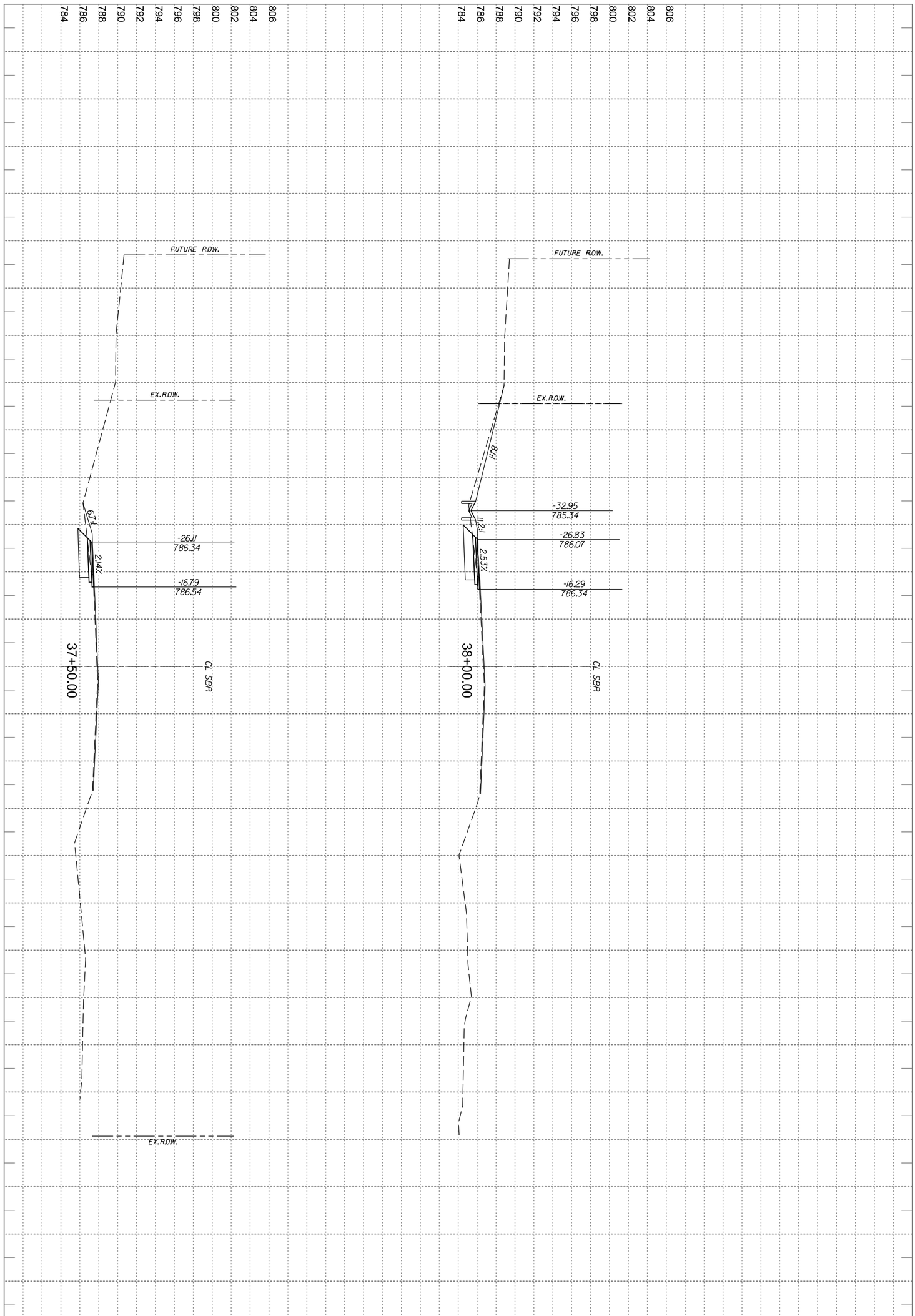

Sheet Number	575
Sheet Title	PROPOSED CROSS SECTIONS
Project No.:	36179
Issued:	4/6/2023
Drawn By:	JP
Checked By:	JJN
Scale:	AS NOTED

VERTICAL SCALE IN FEET: 0, 5, 10

HORIZONTAL SCALE IN FEET: 0, 5, 10, 15, 20

FOR INFORMATION ONLY

CROSS SECTIONS SHOULD NOT BE USED FOR CONSTRUCTION PURPOSES. REFER TO INFORMATION IN CONSTRUCTION PLANS.

Revision		
No.	Date	Description
.	.	.
.	.	.
.	.	.
.	.	.
.	.	.
.	.	.
.	.	.

halff
13620 BRIARWICK DR
BLDG C, STE 100
AUSTIN, TX 78729
(512) 777-4600
TBPELS FIRM #312

WYOMING SPRINGS

SEGMENT 1

Round Rock, Texas

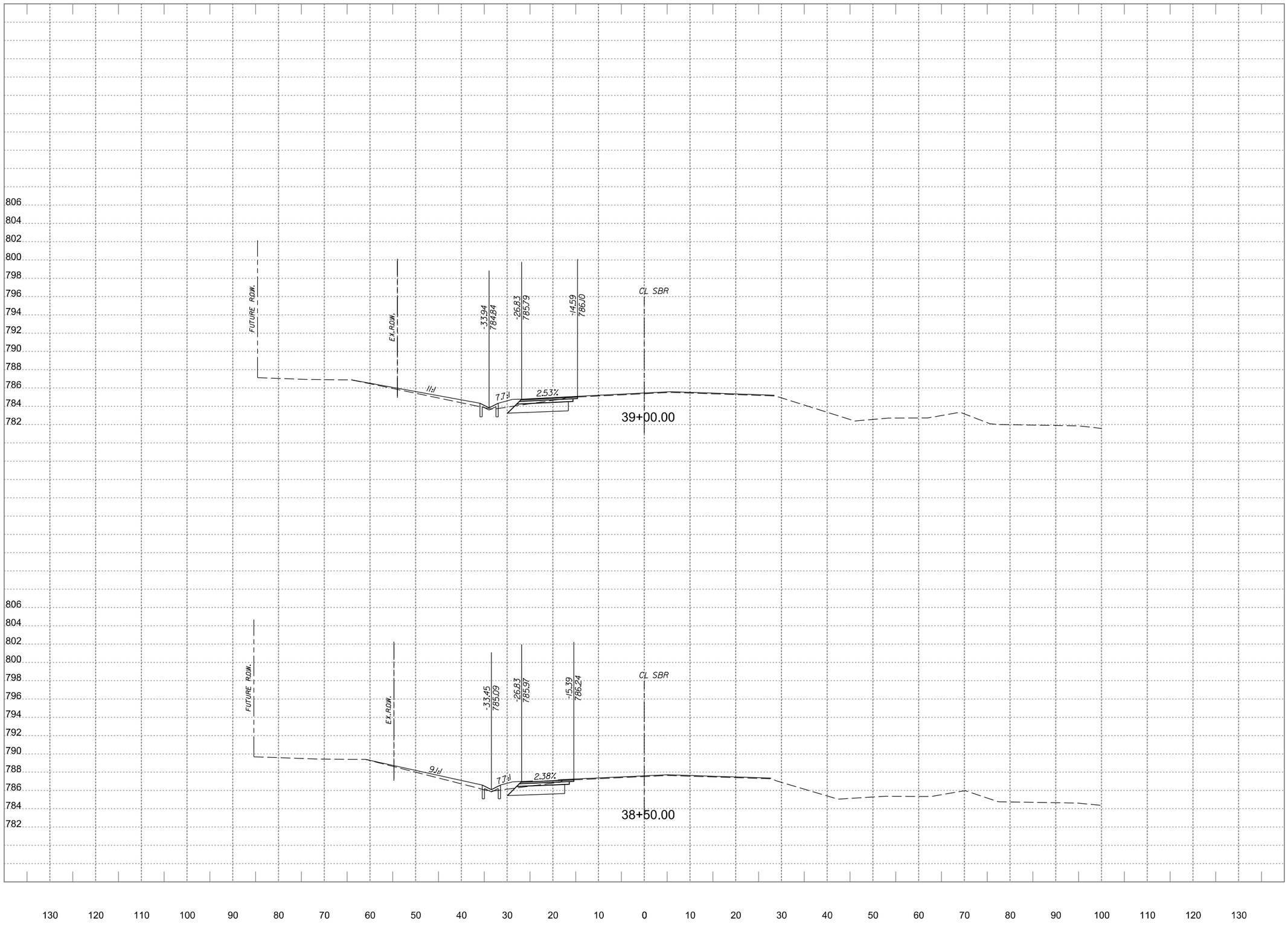

WYOMING SPRINGS

SEGMENT 1

Round Rock, Texas

halff

13620 BRIARWICK DR
BLDG C, STE 100
AUSTIN, TX 78729
(512) 777-4600
TBPELS FIRM #312

Revision		
No.	Date	Description
.	.	.
.	.	.
.	.	.
.	.	.
.	.	.
.	.	.
.	.	.

FOR INFORMATION ONLY

CROSS SECTIONS SHOULD NOT BE USED FOR CONSTRUCTION PURPOSES. REFER TO INFORMATION IN CONSTRUCTION PLANS.

0 5 10 15 20
HORIZONTAL SCALE IN FEET

0 5 10
VERTICAL SCALE IN FEET

Project No.:	36179
Issued:	4/6/2023
Drawn By:	JP
Checked By:	JN
Scale:	AS NOTED

Sheet Title

PROPOSED CROSS SECTIONS

576

Sheet Number

PDF_2D_MON_MW_MR_300.plt

Design

4/6/2023 3:58:21 PM ah1299 HALFF W:\RCH\36000s\36179\002\CADD\SheetsRCH\XS-SHEETS-36179-RCH.dgn

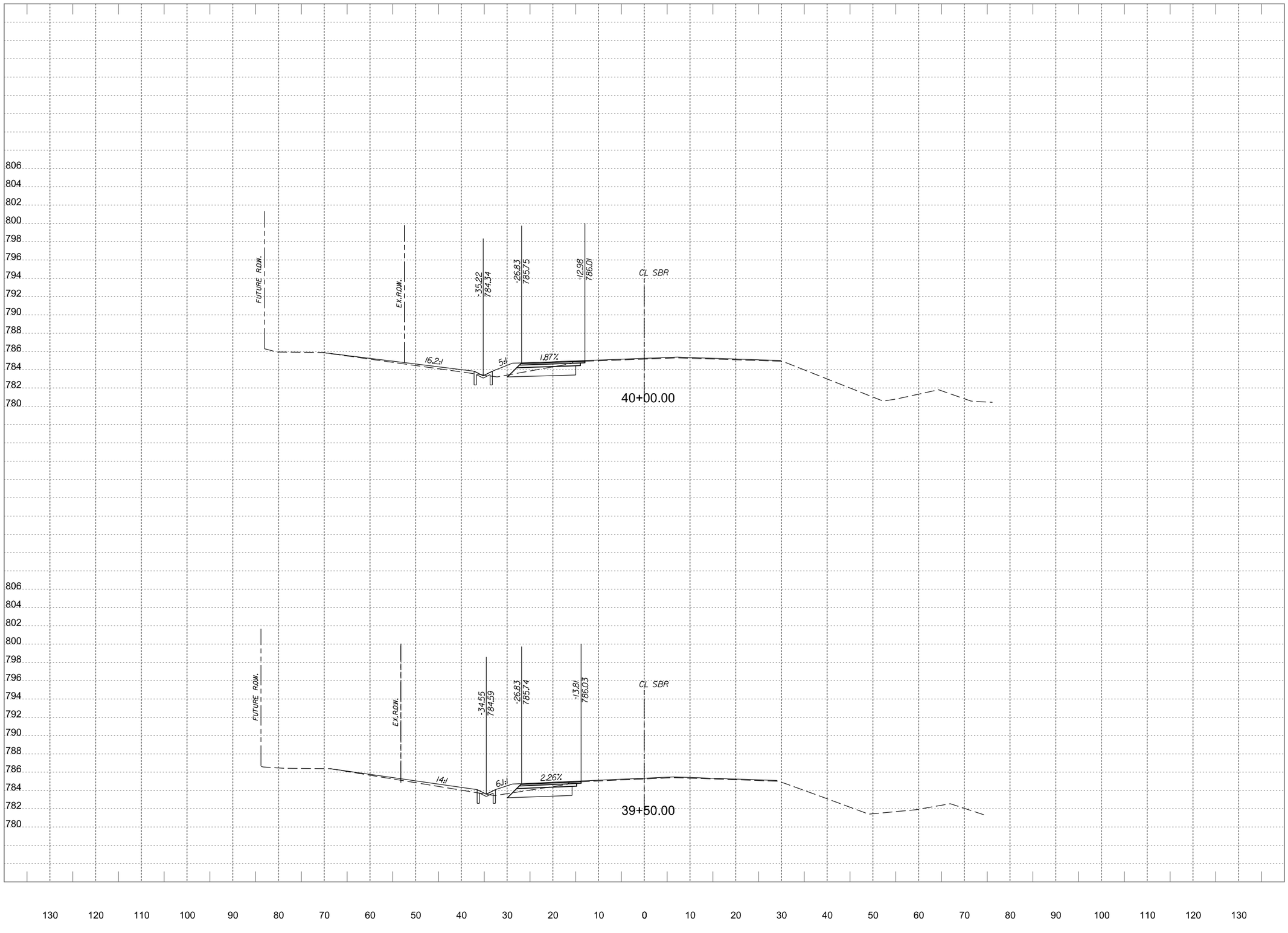

WYOMING SPRINGS

SEGMENT 1

Round Rock, Texas

halff

13620 BRIARWICK DR
BLDG C, STE 100
AUSTIN, TX 78729
(512)777-4600
TBPELS FIRM #312

Revision		
No.	Date	Description
.	.	.
.	.	.
.	.	.
.	.	.
.	.	.
.	.	.
.	.	.

FOR INFORMATION ONLY

CROSS SECTIONS SHOULD NOT BE USED FOR CONSTRUCTION PURPOSES. REFER TO INFORMATION IN CONSTRUCTION PLANS.

0 5 10 15 20
HORIZONTAL SCALE IN FEET

0 5 10
VERTICAL SCALE IN FEET

Project No.:	36179
Issued:	4/6/2023
Drawn By:	JP
Checked By:	JN
Scale:	AS NOTED

Sheet Title

PROPOSED CROSS SECTIONS

577

Sheet Number

PDF_2D_MON_MW_MR_300.plt

Design

4/6/2023 3:58:22 PM ah1299 HALFF W:\RCH\36000s\36179\002\CADD\SheetsRCH\XS-SHEETS-36179-RCH.dgn

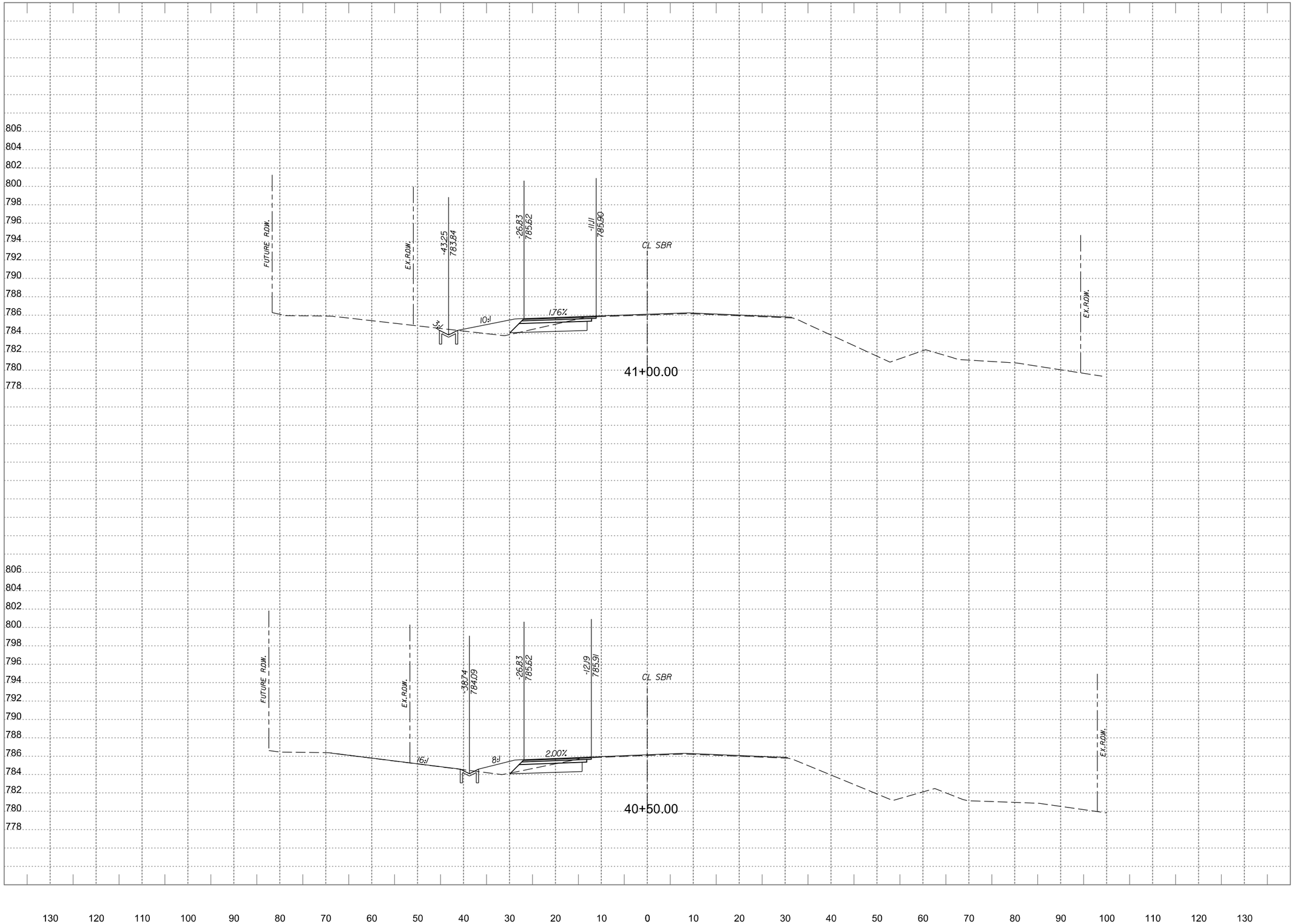

WYOMING SPRINGS

SEGMENT 1

Round Rock, Texas

halff

13620 BRIARWICK DR
BLDG C, STE 100
AUSTIN, TX 78729
(512) 777-4600
TBPELS FIRM #312

Revision		
No.	Date	Description
.	.	.
.	.	.
.	.	.
.	.	.
.	.	.
.	.	.
.	.	.

FOR INFORMATION ONLY

CROSS SECTIONS SHOULD NOT BE USED FOR CONSTRUCTION PURPOSES. REFER TO INFORMATION IN CONSTRUCTION PLANS.

0 5 10 15 20
HORIZONTAL SCALE IN FEET

0 5 10
VERTICAL SCALE IN FEET

Project No.:	36179
Issued:	4/6/2023
Drawn By:	JP
Checked By:	JN
Scale:	AS NOTED

Sheet Title

PROPOSED CROSS SECTIONS

578

Sheet Number

PDF_2D_MON_MW_MR_300.plt

Design

4/6/2023 3:58:23 PM ah1299 HALFF W:\RCH\36000s\36179\002\CADD\SheetsRCH\XS-SHEETS-36179-RCH.dgn

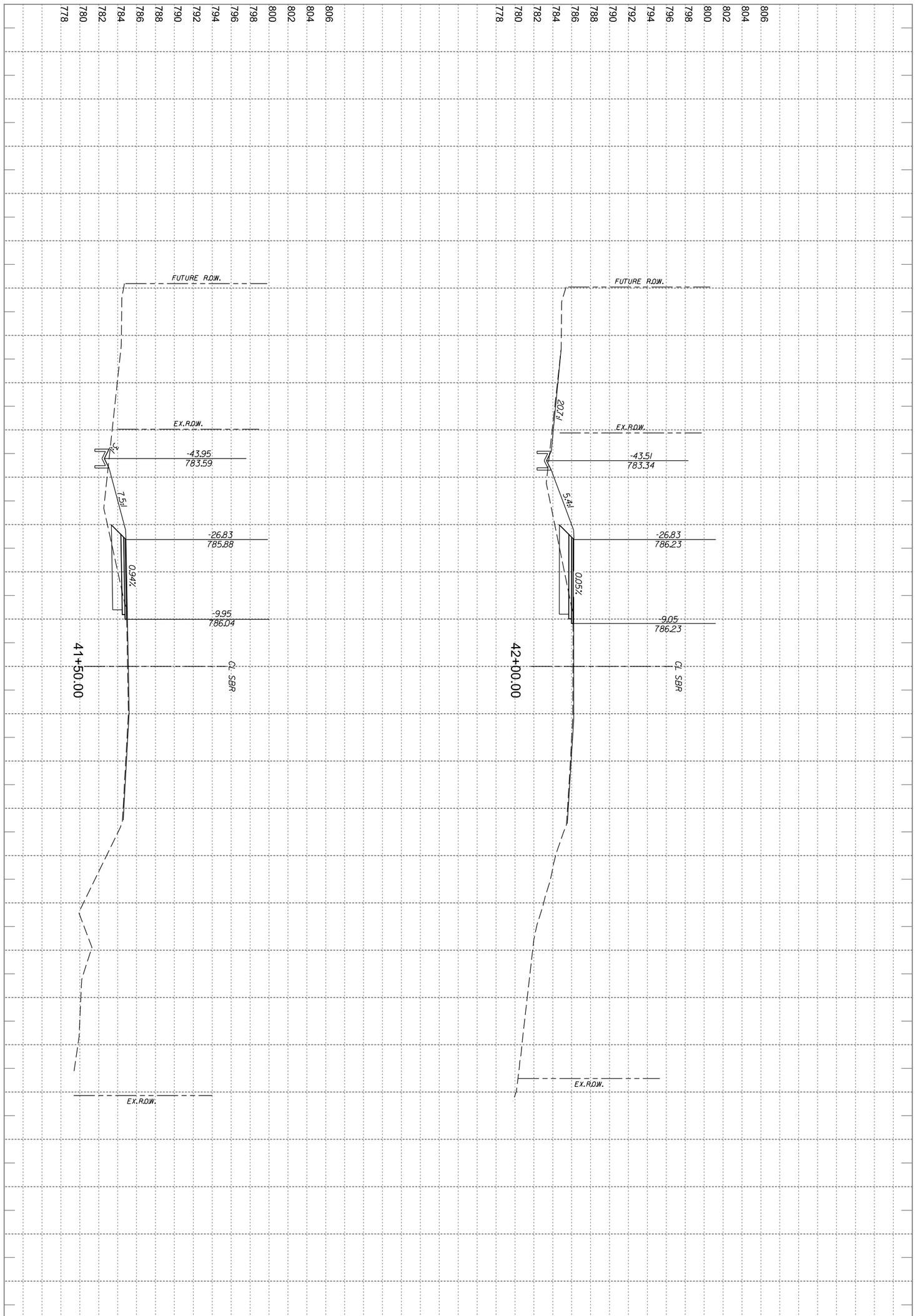

Sheet Number	579
Sheet Title	PROPOSED CROSS SECTIONS
Project No.:	36179
Issued:	4/6/2023
Drawn By:	JP
Checked By:	JN
Scale(s):	AS NOTED

HORIZONTAL SCALE IN FEET: 0, 5, 10, 15, 20

VERTICAL SCALE IN FEET: 0, 5, 10

FOR INFORMATION ONLY

CROSS SECTIONS SHOULD NOT BE USED FOR CONSTRUCTION PURPOSES. REFER TO INFORMATION IN CONSTRUCTION PLANS.

Revision		
No.	Date	Description
.	.	.
.	.	.
.	.	.
.	.	.
.	.	.
.	.	.
.	.	.

halff
13620 BRIARWICK DR
BLDG C, STE 100
AUSTIN, TX 78729
(512) 777-4600
TBPELS FIRM #312

WYOMING SPRINGS

SEGMENT 1

Round Rock, Texas

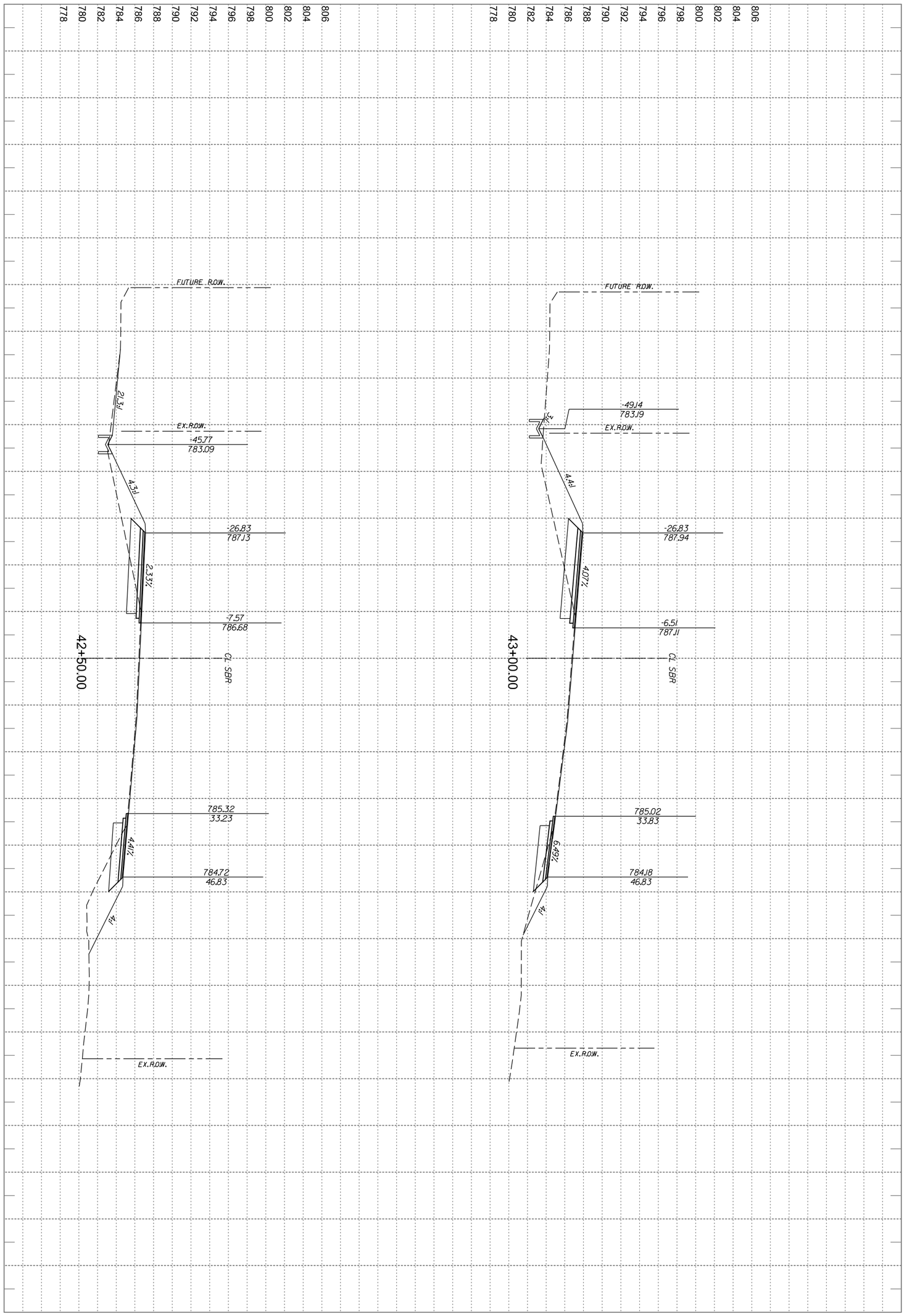

Sheet Number	580
Sheet Title	PROPOSED CROSS SECTIONS
Scale:	AS NOTED
Checked By:	JJN
Drawn By:	JJP
Issued:	4/6/2023
Project No.:	36179

VERTICAL SCALE IN FEET: 0, 5, 10

HORIZONTAL SCALE IN FEET: 0, 5, 10, 15, 20

FOR INFORMATION ONLY

GROSS SECTIONS SHOWN. NOT TO BE USED FOR CONSTRUCTION PURPOSES. REFER TO INFORMATION IN CONSTRUCTION PLANS.

Revision		
No.	Date	Description
.	.	.
.	.	.
.	.	.
.	.	.
.	.	.
.	.	.
.	.	.

halff
13620 BRIARWICK DR
BLDG C, STE 100
AUSTIN, TX 78729
(512) 777-4600
TBPELS FIRM #312

WYOMING SPRINGS

SEGMENT 1

Round Rock, Texas

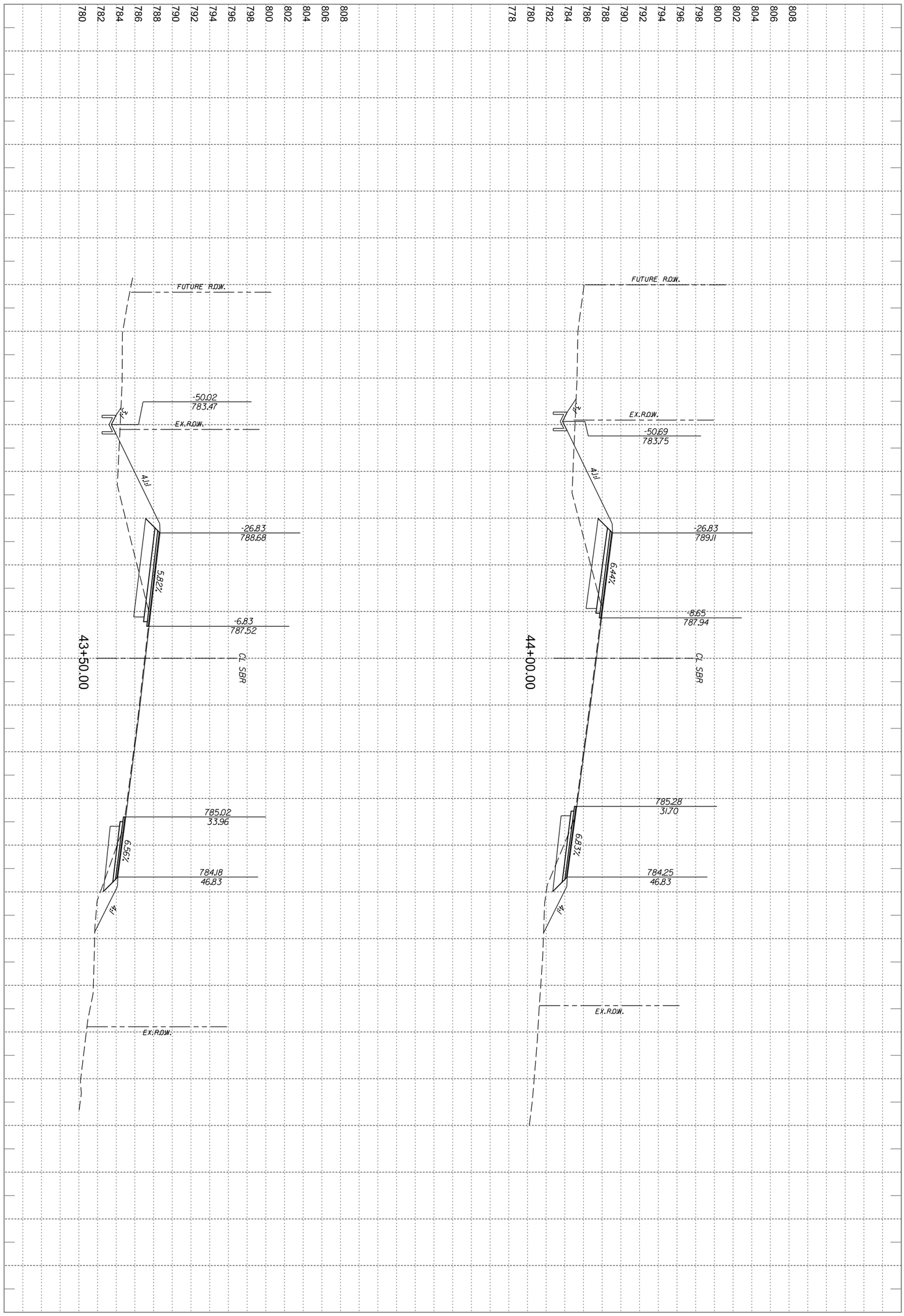

Project No.:	36179
Issued:	4/6/2023
Drawn By:	JP
Checked By:	JJN
Scale:	AS NOTED

Sheet Title: PROPOSED CROSS SECTIONS

Sheet Number: 581

VERTICAL SCALE IN FEET: 0 5 10

HORIZONTAL SCALE IN FEET: 0 5 10 15 20

FOR INFORMATION ONLY

CROSS SECTIONS SHOULD NOT BE USED FOR CONSTRUCTION PURPOSES. REFER TO INFORMATION IN CONSTRUCTION PLANS.

Revision		
No.	Date	Description
.	.	.
.	.	.
.	.	.
.	.	.
.	.	.
.	.	.
.	.	.

halff
13620 BRIARWICK DR
BLDG C, STE 100
AUSTIN, TX 78729
(512) 777-4600
TBPELS FIRM #312

WYOMING SPRINGS

SEGMENT 1

Round Rock, Texas

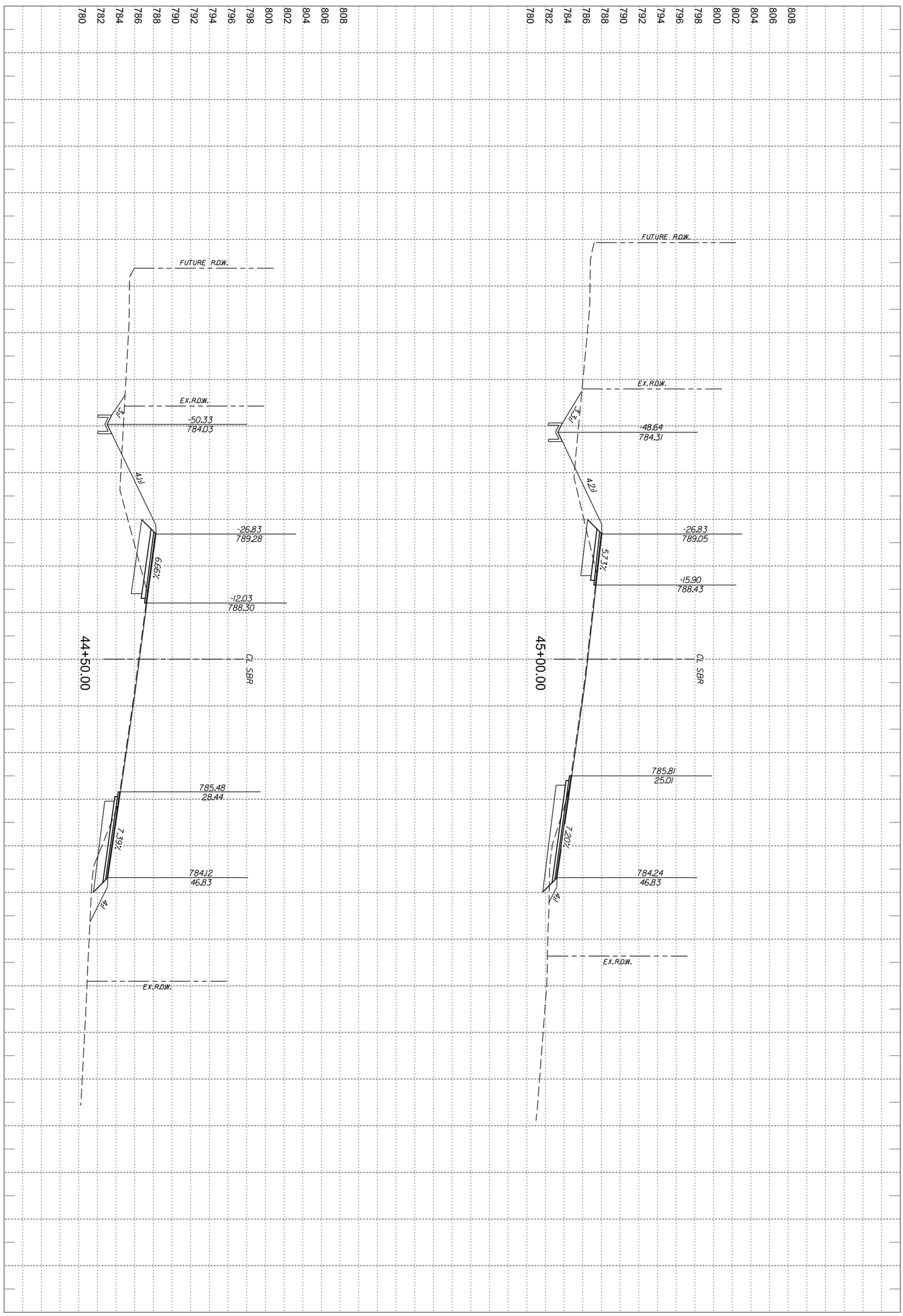

Sheet Number
582

PROPOSED CROSS SECTIONS

Project No.:	36179
Issued:	4/6/2023
Drawn By:	JP
Checked By:	JJN
Scale:	AS NOTED

HORIZONTAL SCALE IN FEET
0 5 10 15 20

VERTICAL SCALE IN FEET
0 5 10

FOR INFORMATION ONLY

CROSS SECTIONS SHOULD NOT BE USED FOR CONSTRUCTION PURPOSES. REFER TO INFORMATION IN CONSTRUCTION PLANS.

Revision		
No.	Date	Description
.	.	.
.	.	.
.	.	.
.	.	.
.	.	.
.	.	.
.	.	.

halff
13620 BRIARWICK DR
BLDG C, STE 100
AUSTIN, TX 78729
(512) 777-4600
TBPELS FIRM #312

WYOMING SPRINGS

SEGMENT 1

Round Rock, Texas

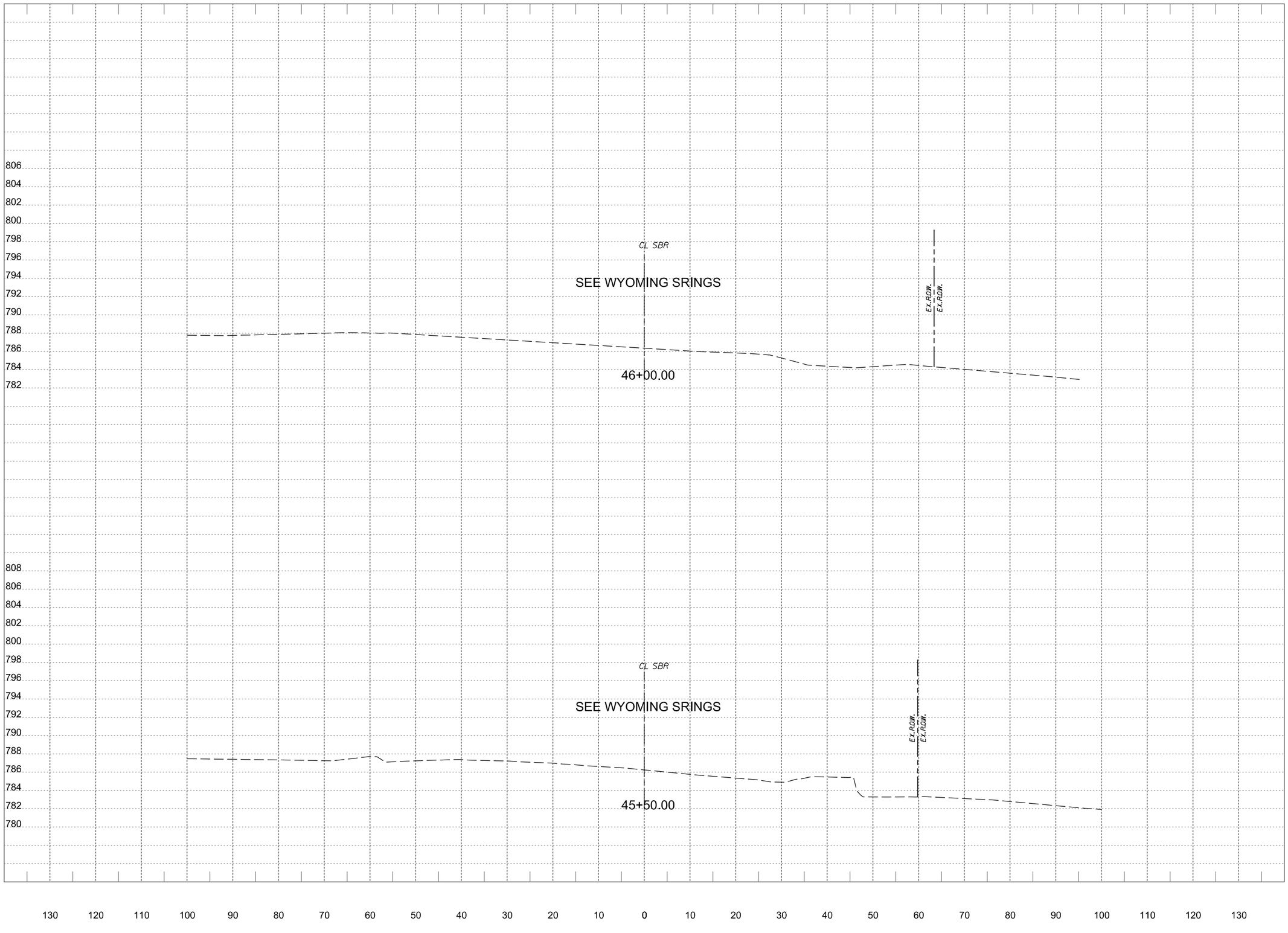

WYOMING SPRINGS

SEGMENT 1

Round Rock, Texas

halff

13620 BRIARWICK DR
BLDG C, STE 100
AUSTIN, TX 78729
(512) 777-4600
TBPELS FIRM #312

Revision		
No.	Date	Description
.	.	.
.	.	.
.	.	.
.	.	.
.	.	.
.	.	.
.	.	.

FOR INFORMATION ONLY

CROSS SECTIONS SHOULD NOT BE USED FOR CONSTRUCTION PURPOSES. REFER TO INFORMATION IN CONSTRUCTION PLANS.

0 5 10 15 20
HORIZONTAL SCALE IN FEET

0 5 10
VERTICAL SCALE IN FEET

Project No.:	36179
Issued:	4/6/2023
Drawn By:	JP
Checked By:	JN
Scale:	AS NOTED

Sheet Title

PROPOSED CROSS SECTIONS

583

Sheet Number

PDF_2D_MON_MW_MR_300.plt

Design

4/6/2023 3:58:27 PM ah1299 HALFF W:\RCH\36000s\36179\002\CADD\SheetsRCH\XS-SHEETS-36179-RCH.dgn

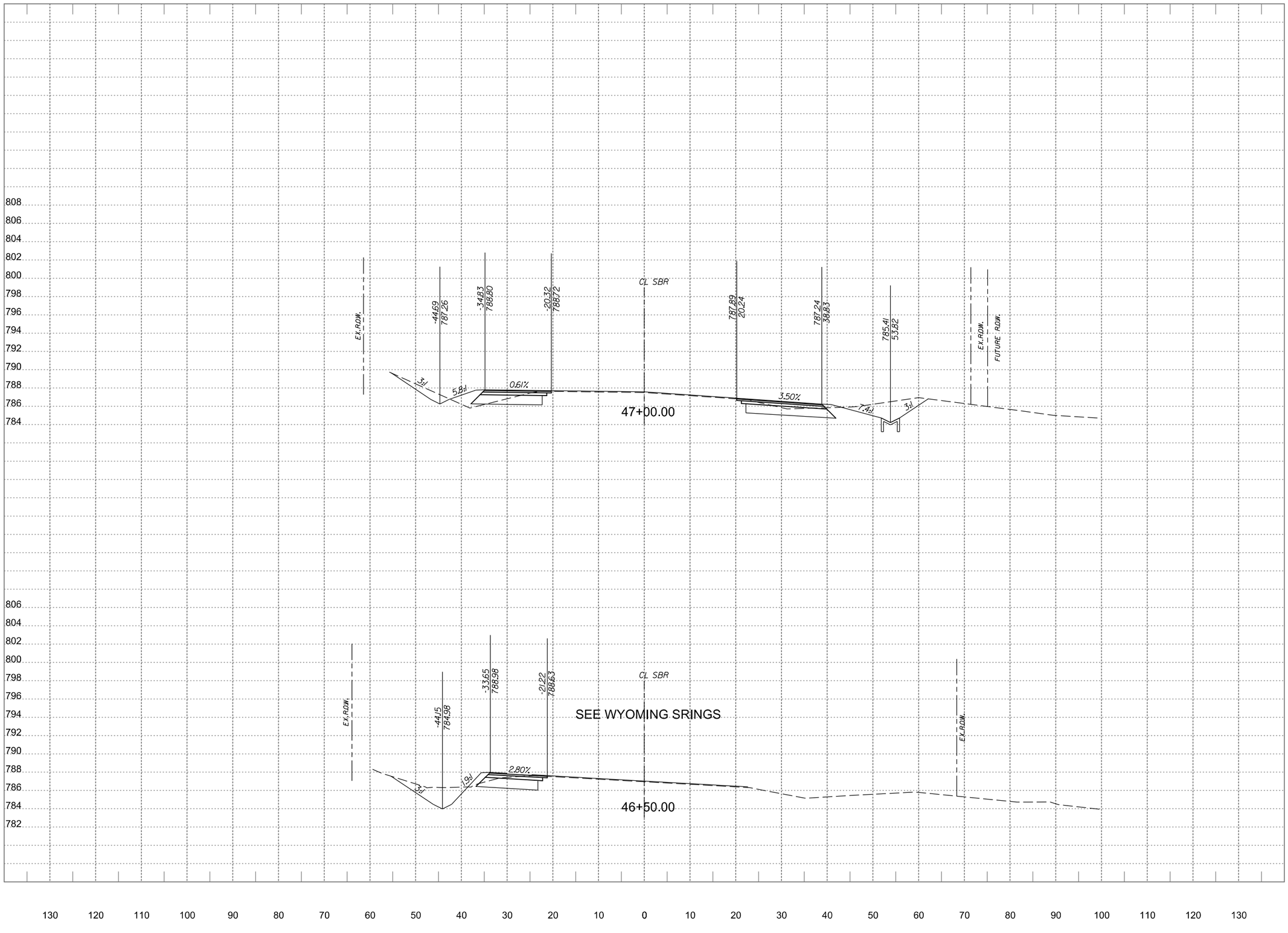

WYOMING SPRINGS

SEGMENT 1

Round Rock, Texas

halff

13620 BRIARWICK DR
BLDG C, STE 100
AUSTIN, TX 78729
(512)777-4600
TBPELS FIRM #312

Revision		
No.	Date	Description
.	.	.
.	.	.
.	.	.
.	.	.
.	.	.
.	.	.
.	.	.

FOR INFORMATION ONLY

CROSS SECTIONS SHOULD NOT BE USED FOR CONSTRUCTION PURPOSES. REFER TO INFORMATION IN CONSTRUCTION PLANS.

0 5 10 15 20
HORIZONTAL SCALE IN FEET

0 5 10
VERTICAL SCALE IN FEET

Project No.:	36179
Issued:	4/6/2023
Drawn By:	JP
Checked By:	JN
Scale:	AS NOTED

Sheet Title

PROPOSED CROSS SECTIONS

584

Sheet Number

PDF_2D_MON_MW_MR_300.plt

Design

4/6/2023 3:58:28 PM ah1299 HALFF W:\RCH\36000s\36179\002\CADD\SheetsRCH\XS-SHEETS-36179-RCH.dgn

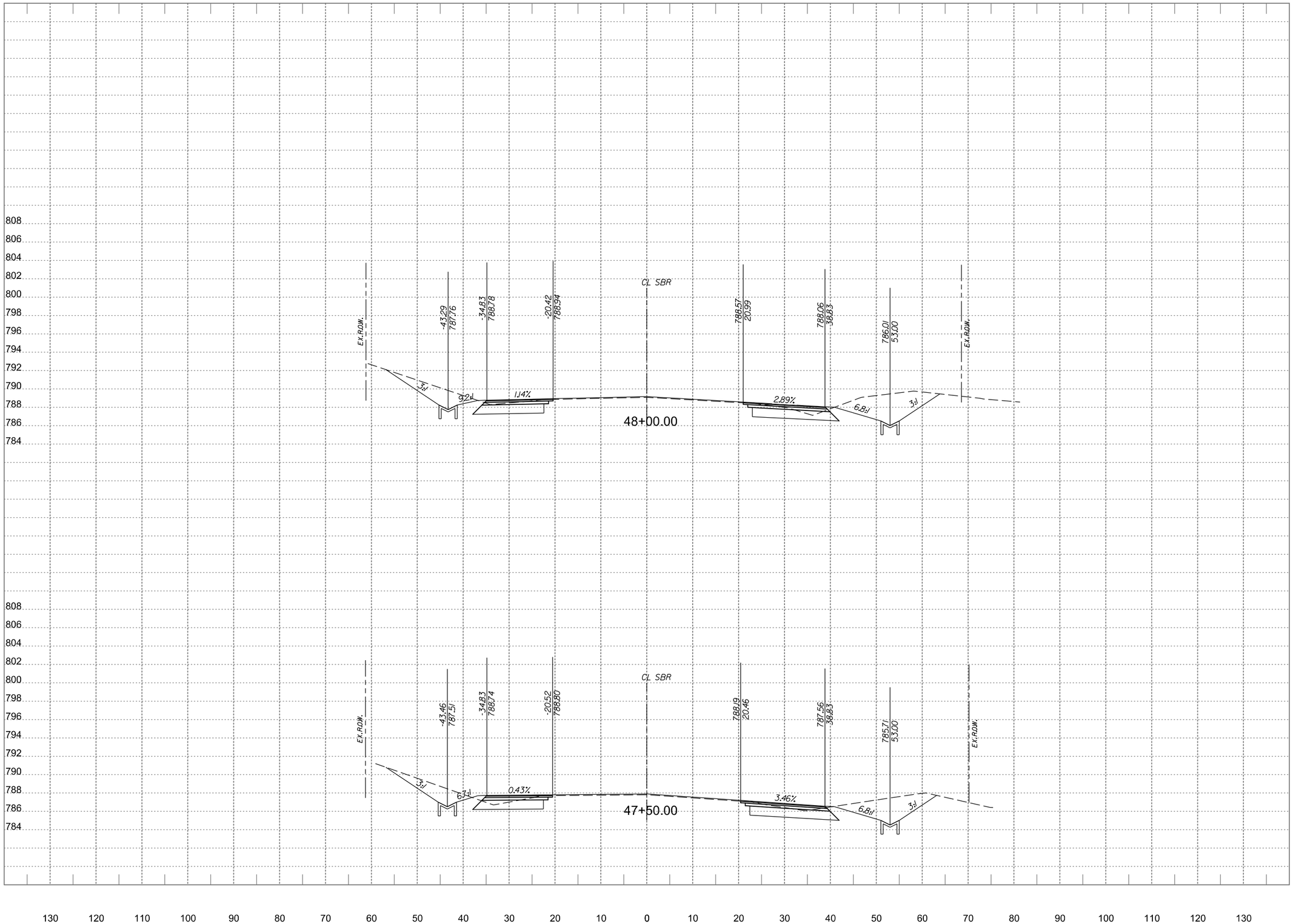

WYOMING SPRINGS

SEGMENT 1

Round Rock, Texas

halff

13620 BRIARWICK DR
BLDG C, STE 100
AUSTIN, TX 78729
(512) 777-4600
TBPELS FIRM #312

Revision		
No.	Date	Description
.	.	.
.	.	.
.	.	.
.	.	.
.	.	.
.	.	.
.	.	.

FOR INFORMATION ONLY

CROSS SECTIONS SHOULD NOT BE USED FOR CONSTRUCTION PURPOSES. REFER TO INFORMATION IN CONSTRUCTION PLANS.

0 5 10 15 20
HORIZONTAL SCALE IN FEET

0 5 10
VERTICAL SCALE IN FEET

Project No.:	36179
Issued:	4/6/2023
Drawn By:	JP
Checked By:	JN
Scale:	AS NOTED

Sheet Title

PROPOSED CROSS SECTIONS

585

Sheet Number

PDF_2D_MON_MW_MR_300.plt

Design

4/6/2023 3:58:29 PM ah1299 HALFF W:\RCH\36000s\36179\002\CADD\SheetsRCH\XS-SHEETS-36179-RCH.dgn

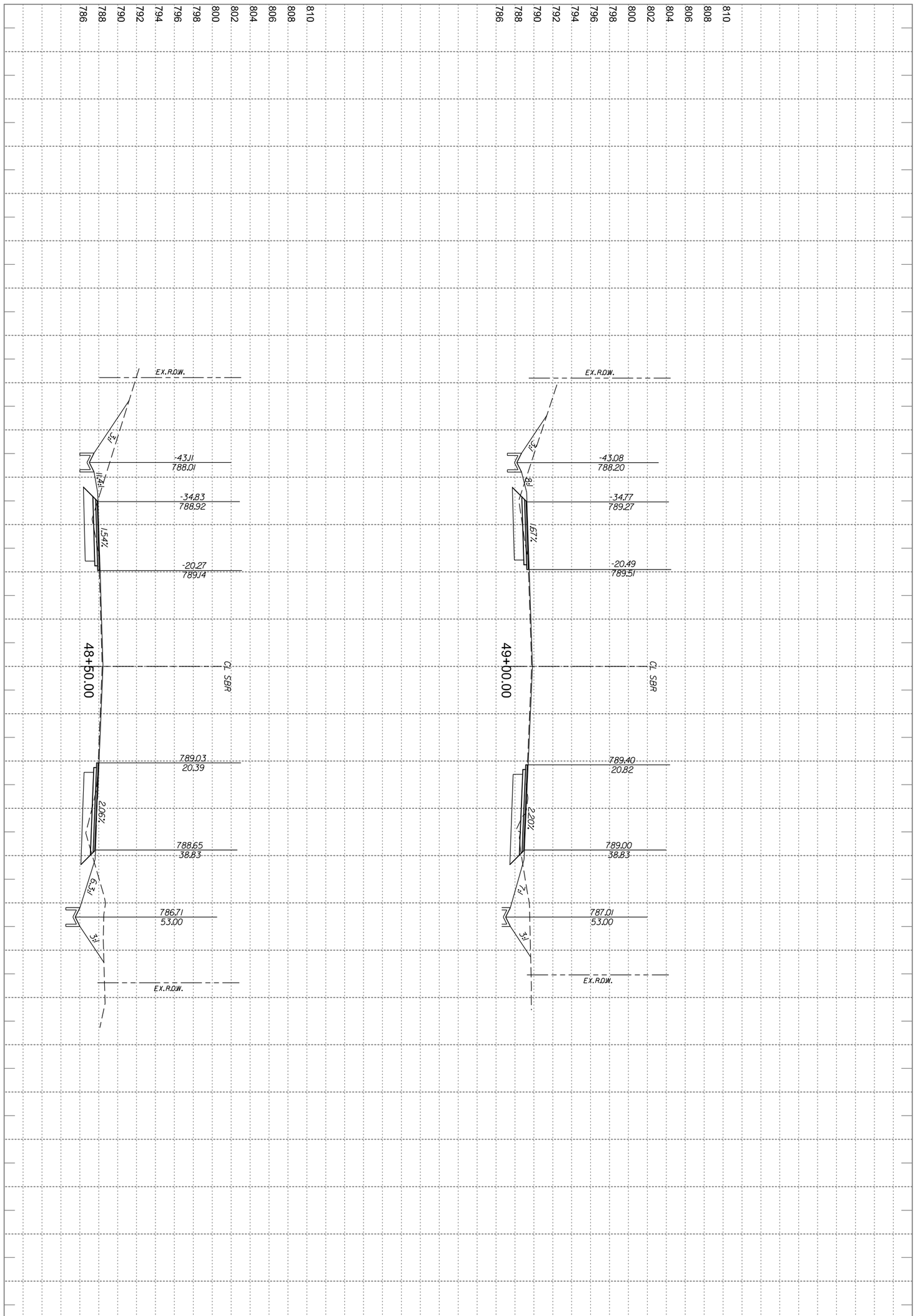

FOR INFORMATION ONLY

CROSS SECTIONS SHOULD NOT BE USED FOR CONSTRUCTION PURPOSES. REFER TO INFORMATION IN CONSTRUCTION PLANS.

HORIZONTAL SCALE IN FEET 0 5 10 15 20

VERTICAL SCALE IN FEET 0 5 10

Revision		
No.	Date	Description
.	.	.
.	.	.
.	.	.
.	.	.
.	.	.
.	.	.
.	.	.

halff
13620 BRIARWICK DR
BLDG C, STE 100
AUSTIN, TX 78729
(512) 777-4600
TBPELS FIRM #312

WYOMING SPRINGS
SEGMENT 1
Round Rock, Texas

Sheet Number 586

Sheet Title: PROPOSED CROSS SECTIONS

Scale: AS NOTED
Checked By: JJN
Drawn By: JJP
Issued: 4/6/2023
Project No.: 36179

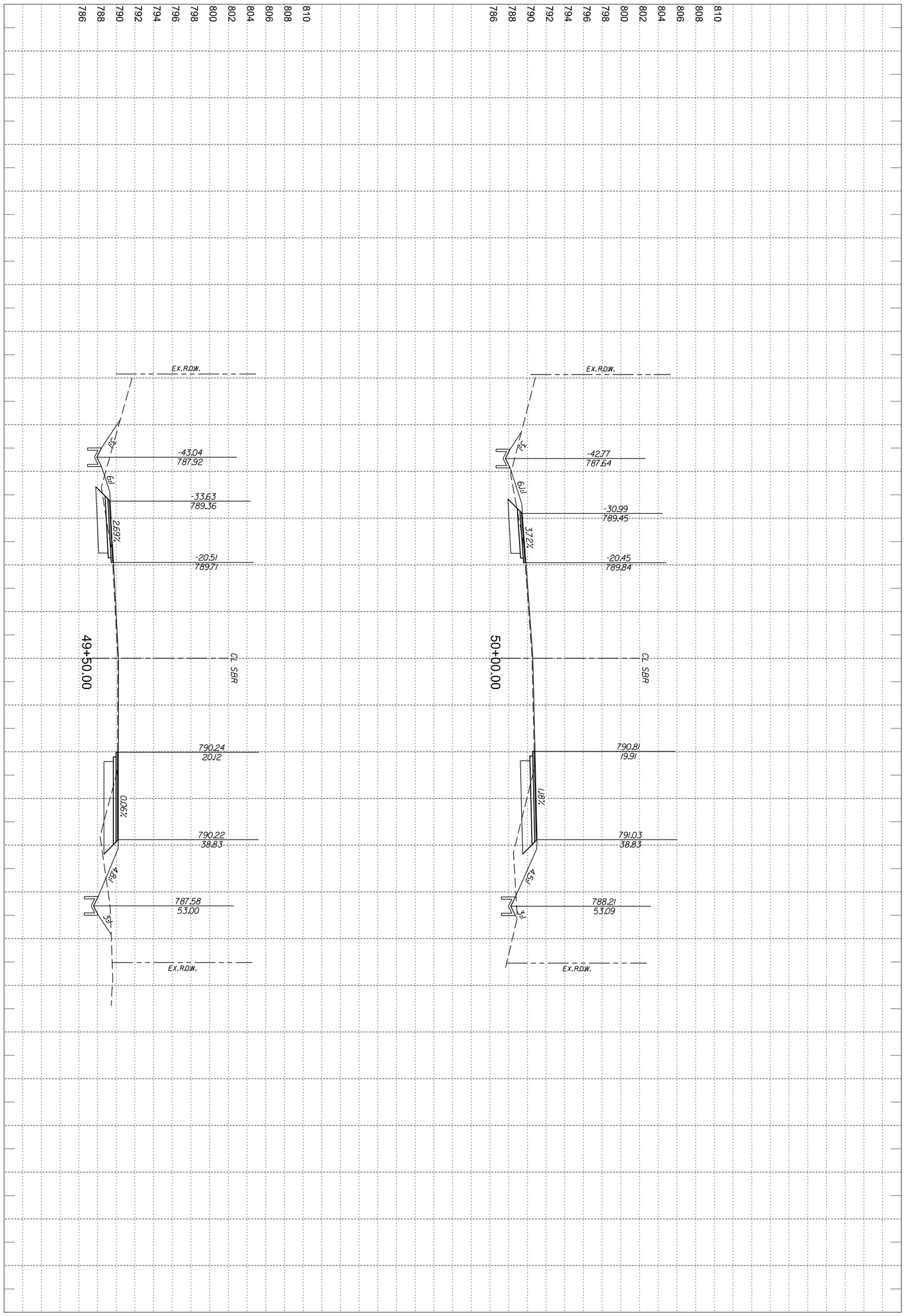

Project No.:	36179
Issued:	4/6/2023
Drawn By:	JP
Checked By:	JJN
Scale:	AS NOTED
Sheet Title	PROPOSED CROSS SECTIONS
Sheet Number	587

VERTICAL SCALE IN FEET: 0, 5, 10

HORIZONTAL SCALE IN FEET: 0, 5, 10, 15, 20

FOR INFORMATION ONLY

CROSS SECTIONS SHOULD NOT BE USED FOR CONSTRUCTION PURPOSES. REFER TO INFORMATION IN CONSTRUCTION PLANS.

Revision		
No.	Date	Description
.	.	.
.	.	.
.	.	.
.	.	.
.	.	.
.	.	.
.	.	.

halff
13620 BRIARWICK DR
BLDG C, STE 100
AUSTIN, TX 78729
(512) 777-4600
TBPELS FIRM #312

WYOMING SPRINGS

SEGMENT 1

Round Rock, Texas

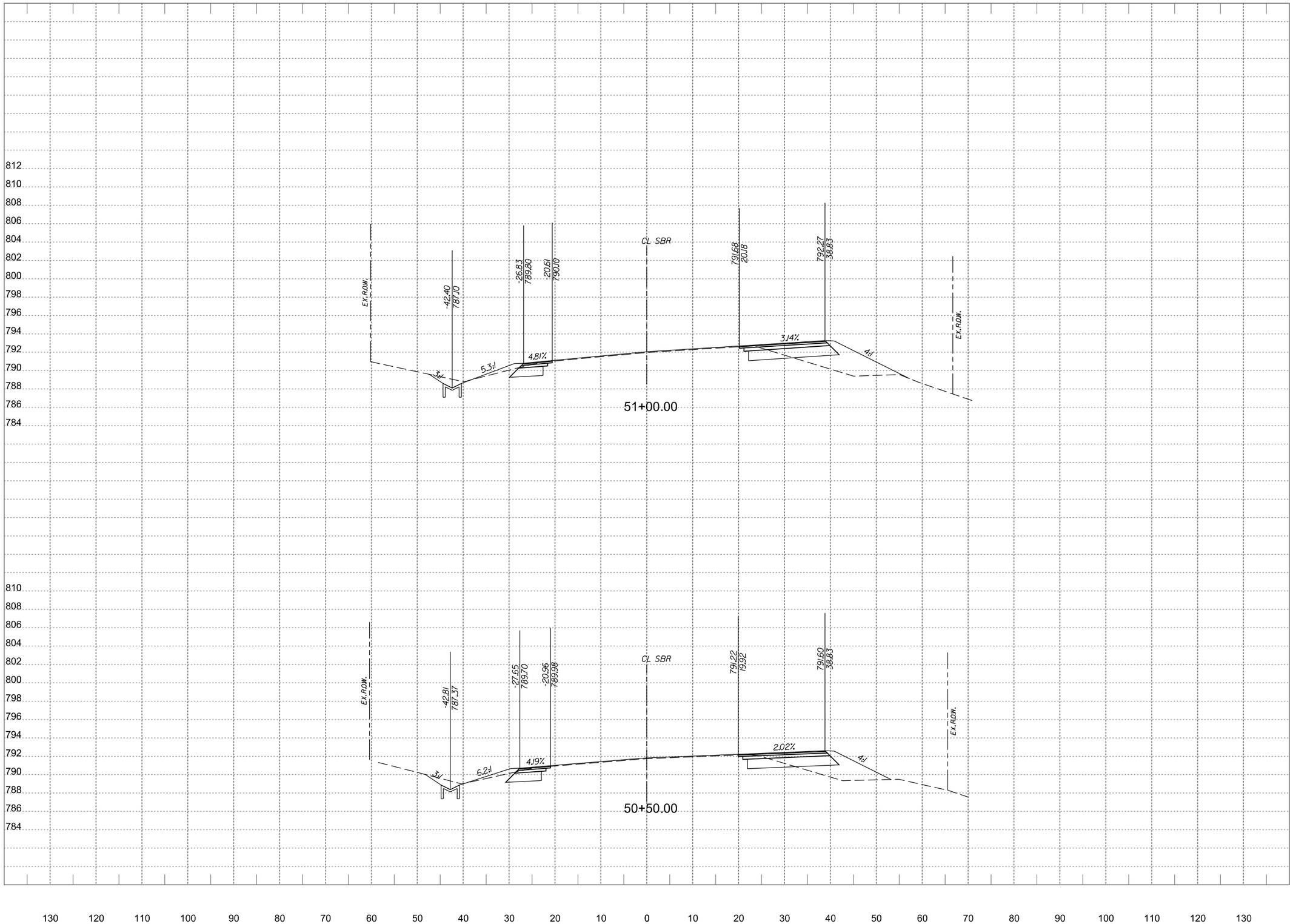

WYOMING SPRINGS

SEGMENT 1

Round Rock, Texas

halff

13620 BRIARWICK DR
BLDG C, STE 100
AUSTIN, TX 78729
(512)777-4600
TBPELS FIRM #312

Revision		
No.	Date	Description
.	.	.
.	.	.
.	.	.
.	.	.
.	.	.
.	.	.
.	.	.

FOR INFORMATION ONLY

CROSS SECTIONS SHOULD NOT BE USED FOR CONSTRUCTION PURPOSES. REFER TO INFORMATION IN CONSTRUCTION PLANS.

0 5 10 15 20
HORIZONTAL SCALE IN FEET

0 5 10
VERTICAL SCALE IN FEET

Project No.:	36179
Issued:	4/6/2023
Drawn By:	JP
Checked By:	JN
Scale:	AS NOTED

Sheet Title

PROPOSED CROSS SECTIONS

588

Sheet Number

PDF_2D_MON_MW_MR_300.plt

Design

4/6/2023 3:58:31 PM ah1299 HALFF W:\RCH\36000s\36179\002\CADD\SheetsRCH\XS-SHEETS-36179-RCH.dgn

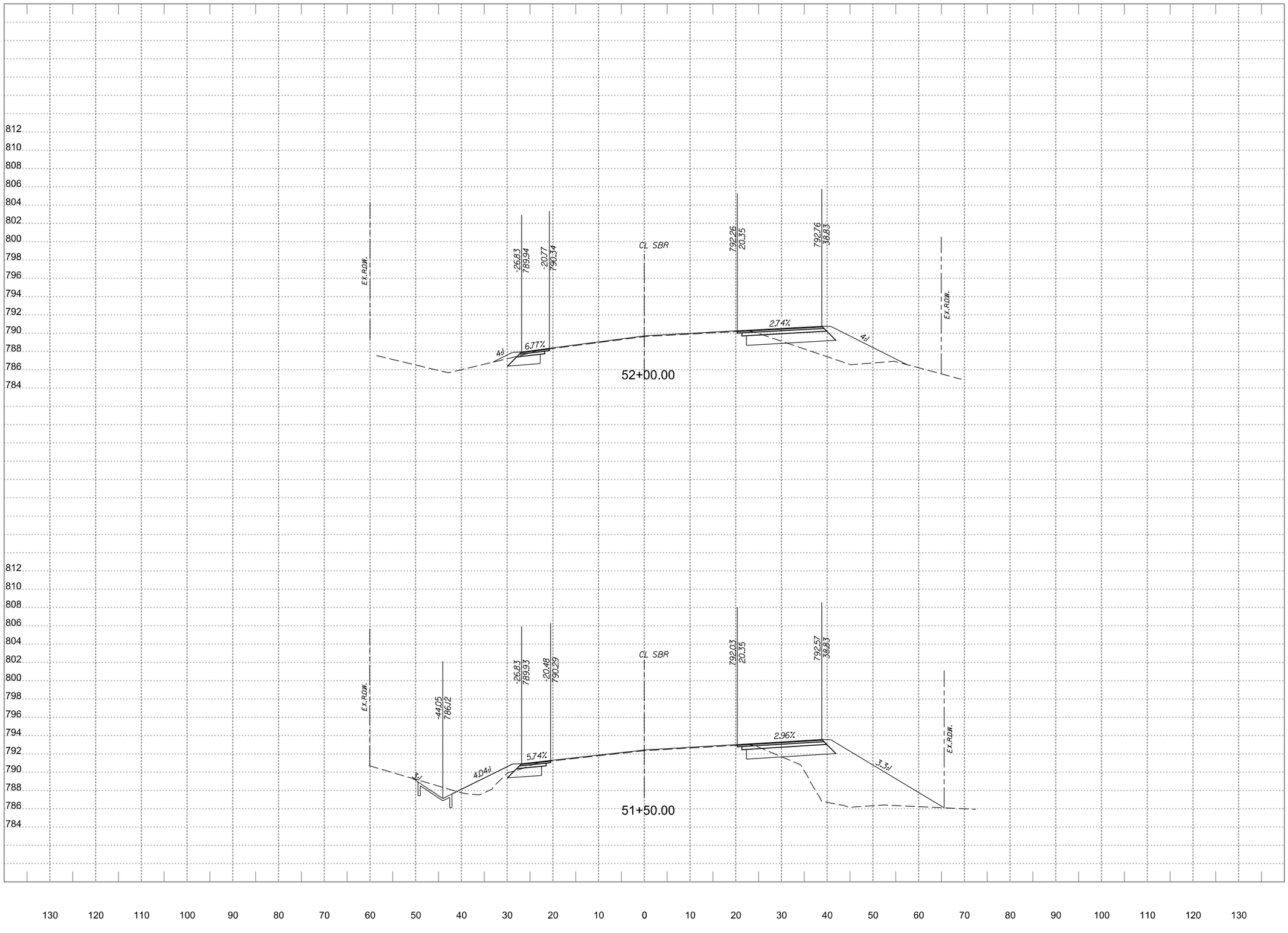

WYOMING SPRINGS

SEGMENT 1

Round Rock, Texas

halff

13620 BRIARWICK DR
BLDG C, STE 100
AUSTIN, TX 78729
(512)777-4600
TBPELS FIRM #312

Revision		
No.	Date	Description
.	.	.
.	.	.
.	.	.
.	.	.
.	.	.
.	.	.
.	.	.

FOR INFORMATION ONLY

CROSS SECTIONS SHOULD NOT BE USED FOR CONSTRUCTION PURPOSES. REFER TO INFORMATION IN CONSTRUCTION PLANS.

0 5 10 15 20
HORIZONTAL SCALE IN FEET

0 5 10
VERTICAL SCALE IN FEET

Project No.:	36179
Issued:	4/6/2023
Drawn By:	JP
Checked By:	JN
Scale:	AS NOTED

Sheet Title

PROPOSED CROSS SECTIONS

589

Sheet Number

PDF_2D_MON_MW_MR_300.plt

Design

4/6/2023 3:58:32 PM ah1299 HALFF W:\RCH\36000s\36179\002\CADD\SheetsRCH\XS-SHEETS-36179-RCH.dgn

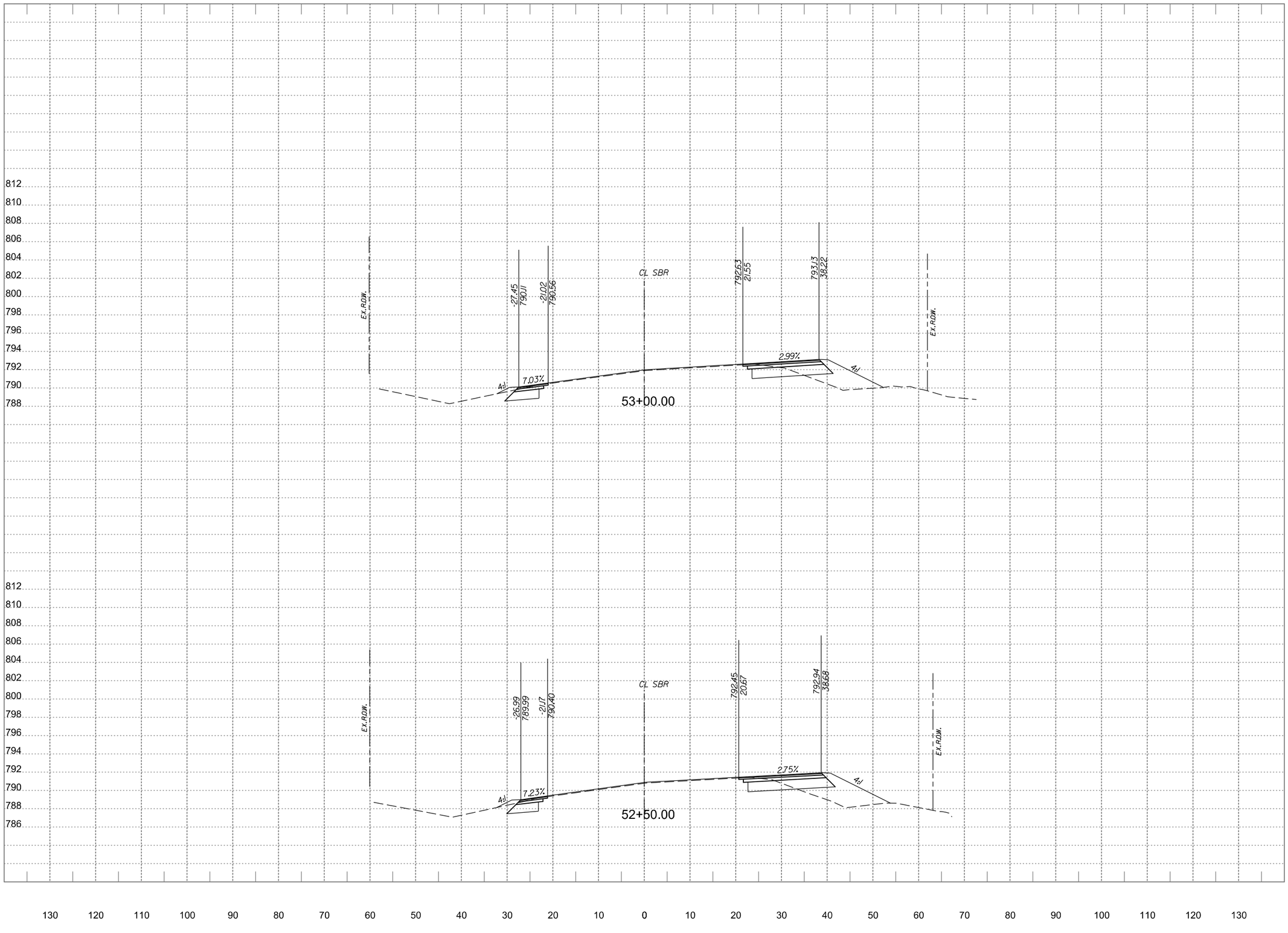

WYOMING SPRINGS

SEGMENT 1

Round Rock, Texas

halff

13620 BRIARWICK DR
BLDG C, STE 100
AUSTIN, TX 78729
(512)777-4600
TBPELS FIRM #312

Revision		
No.	Date	Description
.	.	.
.	.	.
.	.	.
.	.	.
.	.	.
.	.	.
.	.	.

FOR INFORMATION ONLY

CROSS SECTIONS SHOULD NOT BE USED FOR CONSTRUCTION PURPOSES. REFER TO INFORMATION IN CONSTRUCTION PLANS.

0 5 10 15 20
HORIZONTAL SCALE IN FEET

0 5 10
VERTICAL SCALE IN FEET

Project No.:	36179
Issued:	4/6/2023
Drawn By:	JP
Checked By:	JN
Scale:	AS NOTED

Sheet Title

PROPOSED CROSS SECTIONS

590

Sheet Number

PDF_2D_MON_MW_MR_300.plt

Design

4/6/2023 3:58:33 PM ah1299 HALFF W:\RCH\36000s\36179\002\CADD\SheetsRCH\XS-SHEETS-36179-RCH.dgn

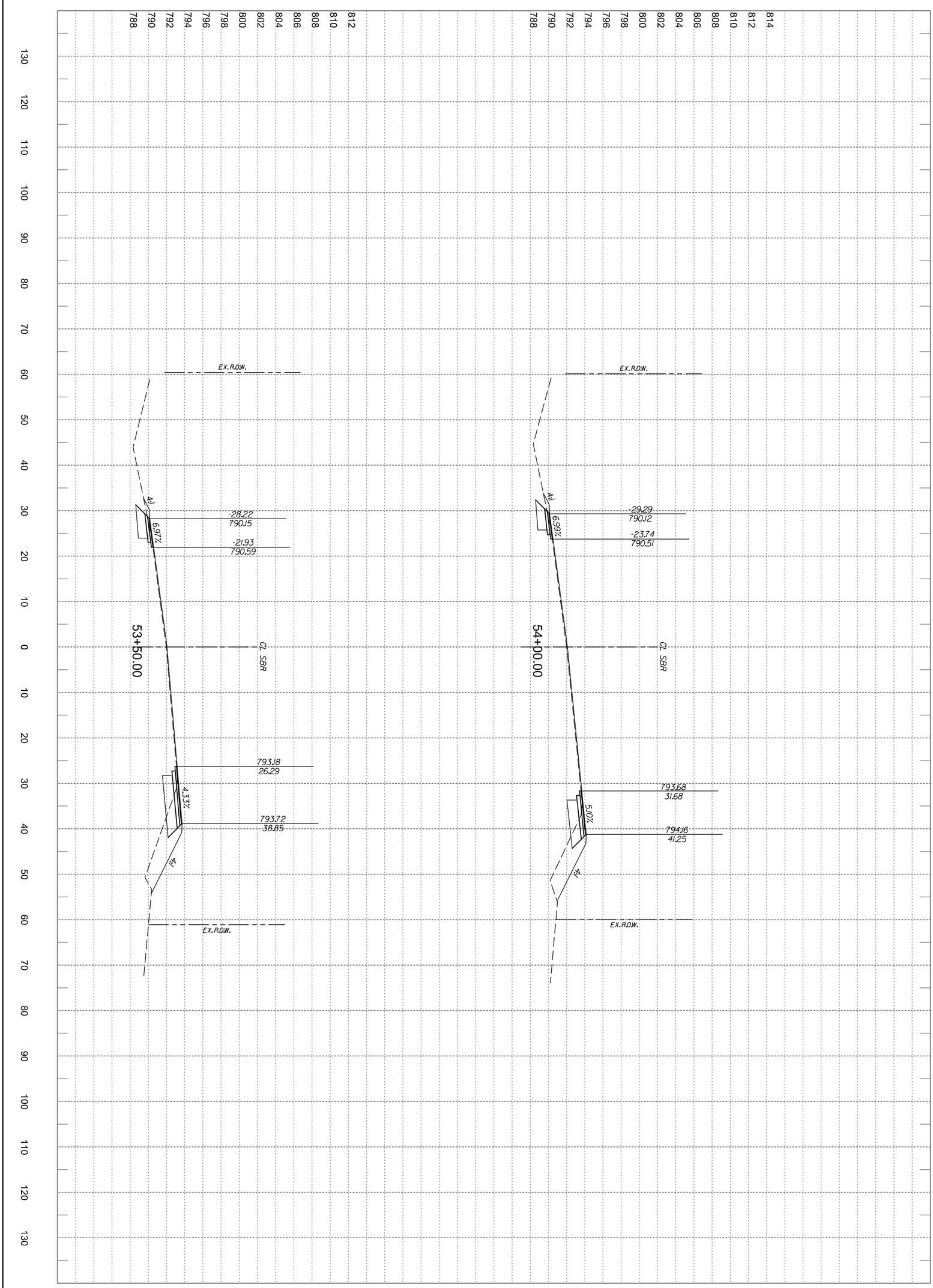

Sheet Number 591

Sheet Title PROPOSED CROSS SECTIONS

Scale: AS NOTED

Checked By: JN

Drawn By: JP

Issued: 4/6/2023

Project No.: 36179

HORIZONTAL SCALE IN FEET 0 5 10 15 20

VERTICAL SCALE IN FEET 0 5 10

FOR INFORMATION ONLY

CROSS SECTIONS SHOULD NOT BE USED FOR CONSTRUCTION PURPOSES. REFER TO INFORMATION IN CONSTRUCTION PLANS.

Revision		
No.	Date	Description
.	.	.
.	.	.
.	.	.
.	.	.
.	.	.
.	.	.
.	.	.

halff

13620 BRIARWICK DR
BLDG C, STE 100
AUSTIN, TX 78729
(512) 777-4600
TBPELS FIRM #312

WYOMING SPRINGS

SEGMENT 1

Round Rock, Texas

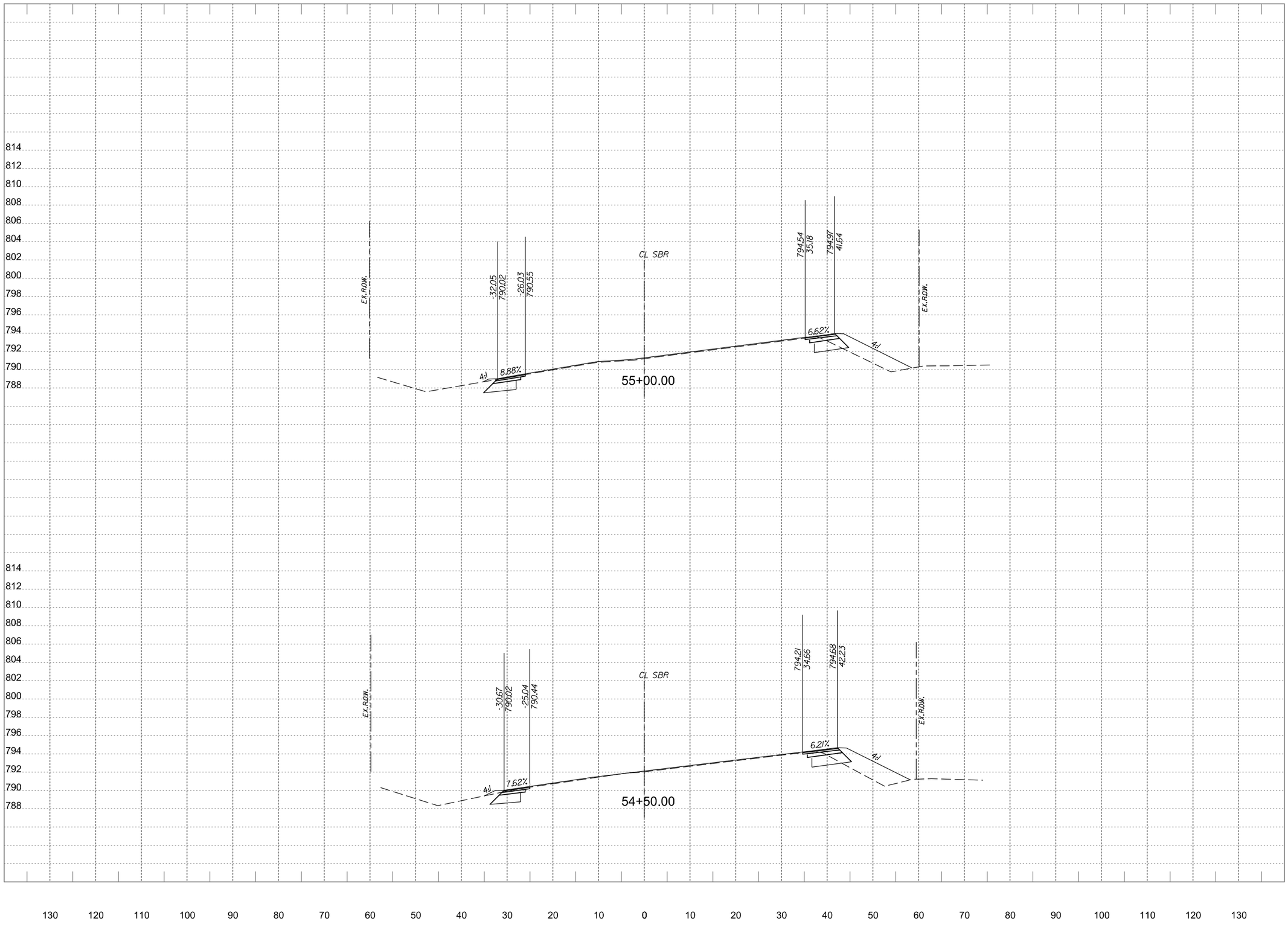

WYOMING SPRINGS

SEGMENT 1

Round Rock, Texas

halff

13620 BRIARWICK DR
BLDG C, STE 100
AUSTIN, TX 78729
(512)777-4600
TBPELS FIRM #312

Revision		
No.	Date	Description
.	.	.
.	.	.
.	.	.
.	.	.
.	.	.
.	.	.
.	.	.

FOR INFORMATION ONLY

CROSS SECTIONS SHOULD NOT BE USED FOR CONSTRUCTION PURPOSES. REFER TO INFORMATION IN CONSTRUCTION PLANS.

0 5 10 15 20
HORIZONTAL SCALE IN FEET

0 5 10
VERTICAL SCALE IN FEET

Project No.:	36179
Issued:	4/6/2023
Drawn By:	JP
Checked By:	JN
Scale:	AS NOTED

Sheet Title

PROPOSED CROSS SECTIONS

592

Sheet Number

PDF_2D_MON_MW_MR_300.plt

Design

4/6/2023 3:58:35 PM ah1299 HALFF W:\RCH\36000s\36179\002\CADD\SheetsRCH\XS-SHEETS-36179-RCH.dgn

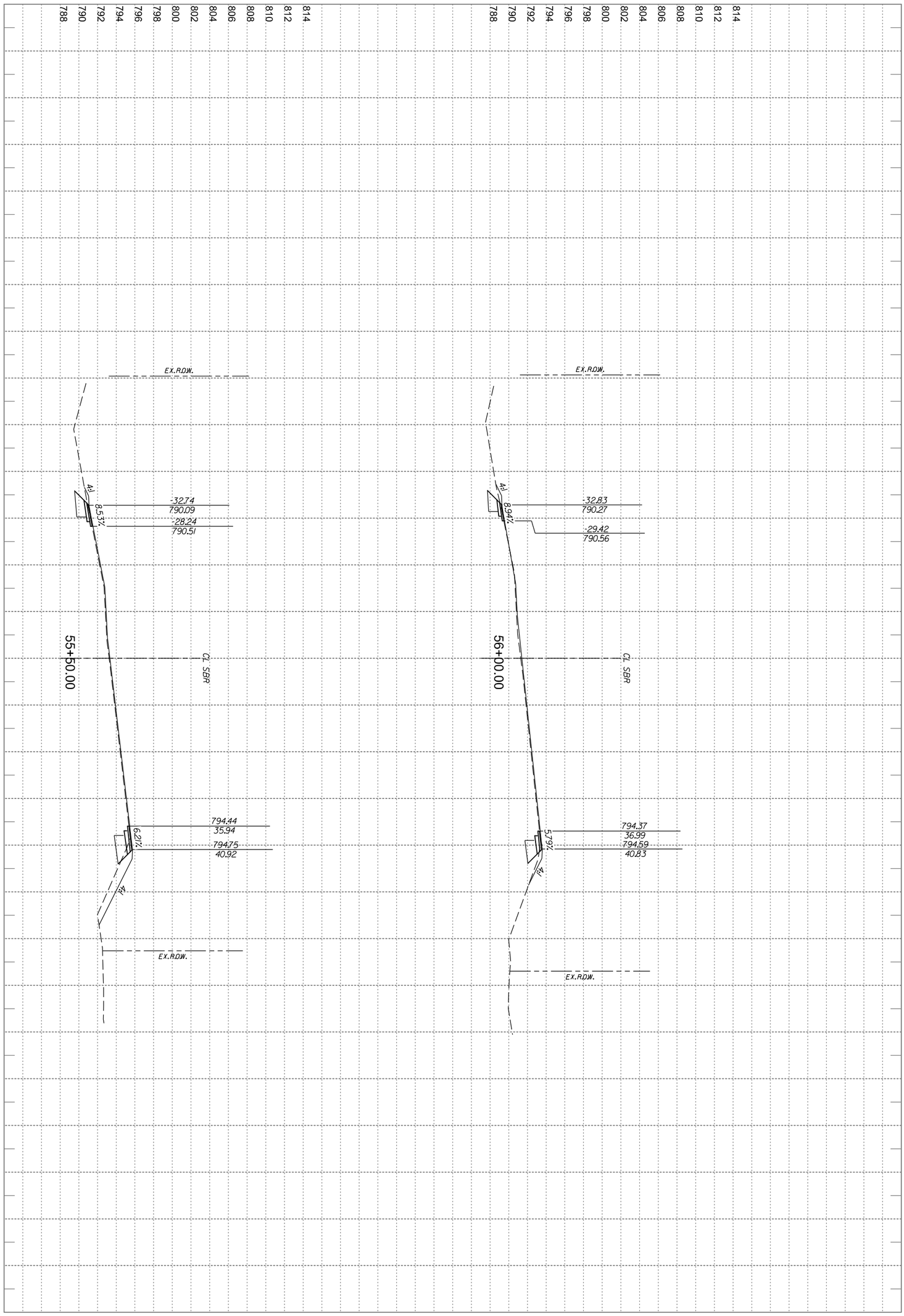

Project No.:	36179
Issued:	4/6/2023
Drawn By:	JP
Checked By:	JJN
Scale:	AS NOTED

Sheet Title: PROPOSED CROSS SECTIONS

Sheet Number: 593

HORIZONTAL SCALE IN FEET: 0 5 10 15 20

VERTICAL SCALE IN FEET: 0 5 10

FOR INFORMATION ONLY

CROSS SECTIONS SHOULD NOT BE USED FOR CONSTRUCTION PURPOSES. REFER TO INFORMATION IN CONSTRUCTION PLANS.

Revision		
No.	Date	Description
.	.	.
.	.	.
.	.	.
.	.	.
.	.	.
.	.	.
.	.	.

halff
13620 BRIARWICK DR
BLDG C, STE 100
AUSTIN, TX 78729
(512) 777-4600
TBPELS FIRM #312

WYOMING SPRINGS

SEGMENT 1

Round Rock, Texas

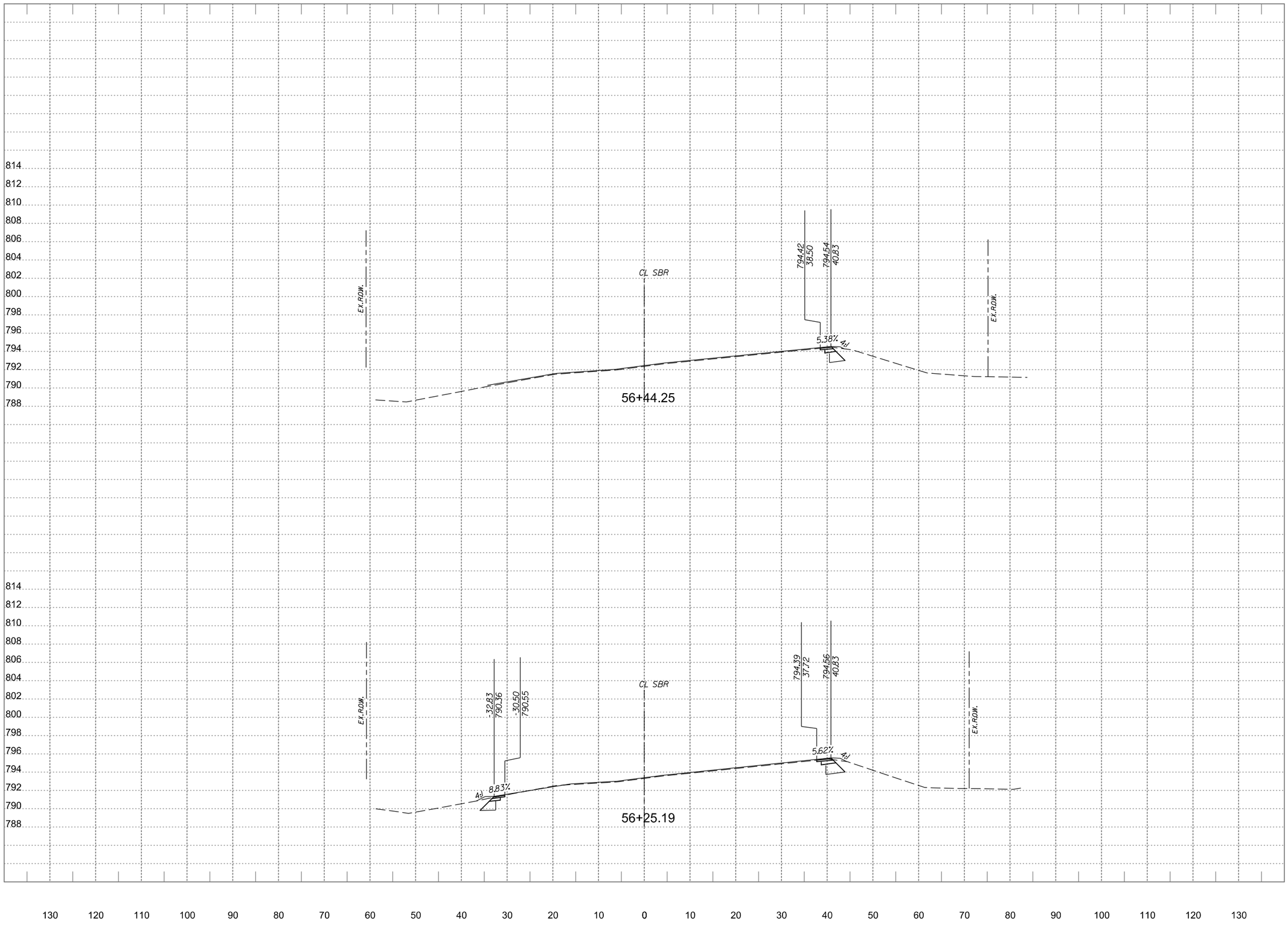

WYOMING SPRINGS

SEGMENT 1

Round Rock, Texas

halff

13620 BRIARWICK DR
BLDG C, STE 100
AUSTIN, TX 78729
(512)777-4600
TBPELS FIRM #312

Revision		
No.	Date	Description
.	.	.
.	.	.
.	.	.
.	.	.
.	.	.
.	.	.
.	.	.

FOR INFORMATION ONLY

CROSS SECTIONS SHOULD NOT BE USED FOR CONSTRUCTION PURPOSES. REFER TO INFORMATION IN CONSTRUCTION PLANS.

0 5 10 15 20
HORIZONTAL SCALE IN FEET

0 5 10
VERTICAL SCALE IN FEET

Project No.:	36179
Issued:	4/6/2023
Drawn By:	JP
Checked By:	JN
Scale:	AS NOTED

Sheet Title

PROPOSED CROSS SECTIONS

594

Sheet Number

PDF_2D_MON_MW_MR_300.plt

Design

4/6/2023 3:58:37 PM ah1299 HALFF W:\RCH\36000s\36179\002\CADD\SheetsRCH\XS-SHEETS-36179-RCH.dgn

ATTACHMENT 5C – BMPs for On-site Stormwater

The permanent BMP controls used to reduce the TSS loading Wyoming Springs (Creekbend Blvd to Sam Bass Rd) are as follows:

- StormTroopers

There are twelve (12) separate StormTrooper units proposed for this project, which are designated as StormTrooper WQ-1, WQ-2, WQ-3, WQ-4, WQ-5, WQ-6, WQ-7, WQ-8, WQ-9, WQ-10, WQ-11, and WQ-12.

Since the site is currently undeveloped, there is presently no water quality treatment out on the project site. The proposed StormTroopers for this project will provide TSS removal for the newly added impervious cover on the project site based on TCEQ's removal requirements.

Ideally for this project a StormTrooper would be placed at every drainage outfall in order to treat all on-site runoff from the project. However, as the amount of contributing area to each StormTrooper increases, the efficiency of that StormTrooper decreases. Because this project proposes newly added impervious cover through an undeveloped site, several StormTroopers were needed to treat the required TSS created by proposed impervious cover on Wyoming Springs and Sam Bass Rd. Four locations were selected along Basin A, three locations along Basin B, two locations along Basin C, two along Basin D, and one along Basin E. Maintenance access, MSE wall strap constraints, utility conflicts, and right-of-way constraints were also factors in determining the most practical locations to place the StormTrooper units. The proposed facilities will successfully mitigate the TSS load caused by the increase of 10.16 acres of new impervious cover between Wyoming Springs and Sam Bass.

Project Summary		
Pre-development Impervious Area	0.40	Acres
Post-development Area	10.16	Acres
Net increase impervious area	9.76	Acres
Required TSS Removal (80% Removal)	8,495	lbs
Proposed TSS Removal	8,521	lbs

StormTrooper Summary			
StormTrooper ID	Station Location	Unit Model	TSS Removal Provided Onsite (lbs)
WQ-1	121+65.41, 40.00 (LT)	SWAQ-110	554
WQ-2	121+59.01, 6.39 (RT)	SWAQ-110	552
WQ-3	126+43.35, 41.84 (RT)	SWAQ-110	683
WQ-4	126+36.74, 43.24 (LT)	SWAQ-40	903
WQ-5	127+92.67, 42.00 (RT)	SWAQ-40	538
WQ-6	127+69.53, 42.42 (LT)	SWAQ-40	197
WQ-7	129+06.86, 40.07 (LT)	SWAQ-110	788
WQ-8	141+41.97, 31.90 (LT)	SWAQ-110	1063
WQ-9	141+38.05, 31.05 (RT)	SWAQ-110	1170
WQ-10	150+50.77, 42.09 (LT)	SWAQ-40	594
WQ-11	150+56.63, 43.52 (RT)	SWAQ-110	652
WQ-12	155+54.89, 6.69 (LT)	SWAQ-110	827
		Total:	8521

Site Runoff Coefficient	
Pre-Project	Post-Project
0.47	0.81

Recommended Maintenance Plan

Edwards Aquifer Region

1.0 Inspection Schedule

- A preventative maintenance cleanout schedule is the most valuable tool for maintaining the proper operation of Park StormTrooper™. Interceptor maintenance costs will be greatly reduced if a good housekeeping plan for the property is developed i.e., trash pickup, lawn maintenance, dumpster control, etc.

- Park StormTrooper™ interceptors have no moving parts. The manufacturer recommends ongoing quarterly inspections for accumulated pollutants. Pollutant accumulation may vary from year to year. Quarterly inspections ensure that the system is serviced at appropriate times. **Owner must observe site conditions and determine whether or not pollutant loads require a more frequent inspection schedule.** Table 1 lists recommended maximum capacities of oil and sediment. Professional vacuum services should be considered when capacities meet or exceed these recommended levels.

Table 1. StormTrooper™ Maintenance Levels

Model Number	Oil Depth	Sediment Depth
SWAQ-05	12”	12”
SWAQ-10	12”	12”
SWAQ-20	12”	12”
SWAQ-25	12”	12”
SWAQ-40	12”	12”
SWAQ-70	12”	12”
SWAQ-110	12”	12”

It is very important to keep a record of each inspection; therefore, an inspection and maintenance form has been attached for your use.

2.0 Inspection Procedures

- Easiest observation and maintenance is best accomplished during non-flow (dry weather) conditions, 5-7 days after the most recent rain.

- Remove interceptor covers or open hatchway to observe conditions. Remove hatchway safety net ("EnterNet"), if installed. Observe for trash and debris and remove if necessary. This is the most important maintenance requirement.

- Coalescing plates are self-cleaning and seldom require maintenance unless damaged. Do not walk on or stand on plate packs. Call ParkUSA (888-611-PARK) for replacement parts.

- Check of the depth (level) of oil and sediment with a tank sampler device designed for this purpose. The tank sampler requires a dipstick tube equipped with a ball valve (typically a Sludge Judge® or Core Pro®).

- Make sure the dipstick tube goes completely to the bottom. Lift the dipstick tube out of the unit and keep it in a vertical position and read the level of sediment and oils from the gauge on the dipstick. Record pollutant levels on your StormTrooper™ Monitoring / Maintenance Report. If either pollutant(s) in the dipstick tube (sediments or oils) exceed the levels indicated on Table 1, maintenance of the StormTrooper™ is required. Upon completing the recording of pollutant levels, the dipstick tube is then drained back into the inlet side of the StormTrooper™. This ensures that the pollutants in the dipstick tube do not leave the unit.

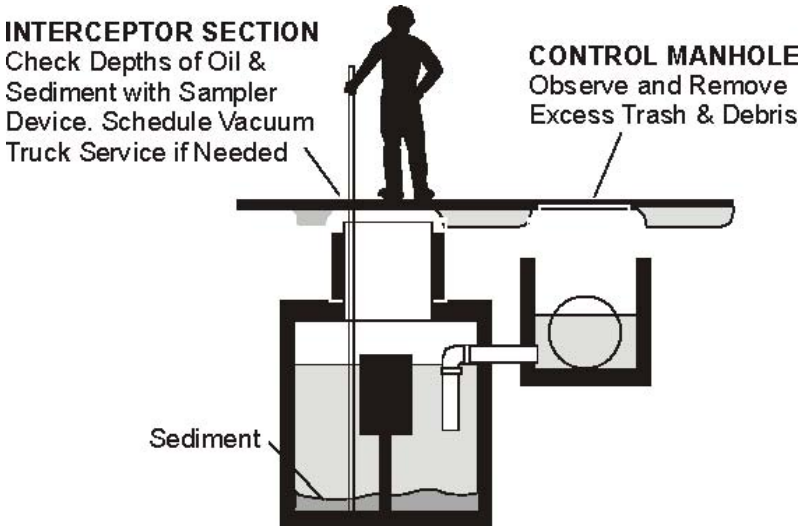

3.0 Maintenance Procedures

- Park Environmental Equipment, manufacturers of StormTrooper™, recommends that a professional pumping contractor licensed to remove and dispose waste from underground utilities be used to pump out the interceptor.

- Pull all manhole covers. Be sure all sections of the interceptor are cleaned. **If a control/bypass manhole is part of the system, it should be inspected and serviced with the interceptor.**

- If the coalescing media option is utilized, visually inspected the plates for any heavy build-up of oil, grease or sludge. Typically, the plates are self-cleaning and require little maintenance. If buildup of material is evident, either remove the media from the frame or clean the plate pack in place. Removing media is accomplished by attaching a lifting device in the lifting lug provided (top center of the frame), and then pull straight up. Media plates may be cleaned in place with special steam cleaning nozzle attachment that provides a flat spray.

- **Facet's MPak® plates are designed to be cleaned in place using a special cleaning wand and city water pressure.** The wand has a connection just like an ordinary garden hose and is equipped with a small conical strainer in the connection so that solids in the inlet water will not clog the cleaning holes.

  For cleaning in place, connect a pressure water hose (at least 60 psig) to the special cleaning wand. Provide a vacuum truck (or other means of disposing of the sludge and dirt) in the vessel. Turn on the water to produce a spray from the wand and insert the tip of the wand slowly into each hole of the plate pack, starting at the upstream end. As the water flushes the dirt out of the plate packs, it should be removed by the vacuum hose or directed to an oil water sewer if one is available. For cleaning outside of the vessel, remove the plate packs and other internals (except bolted-in internals). Flush with hose and cleaning wand to oil water drain.





  (**NOTE:** The cleaning wand produces a vigorous spray. Operators should wear waterproof clothing and goggles or face mask.)

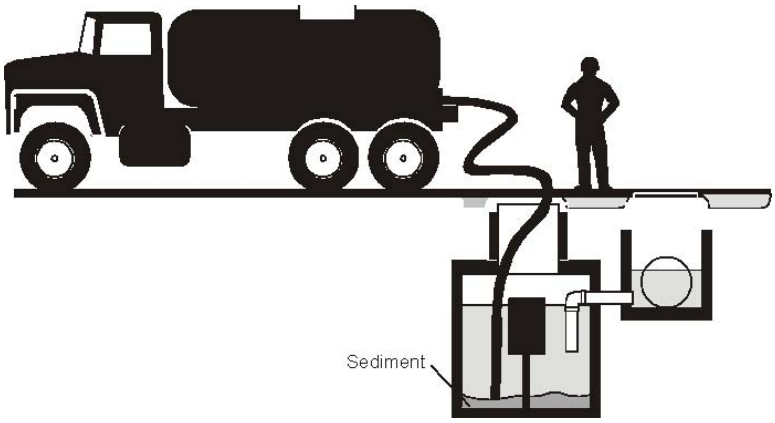

- Typically, the vacuum truck will skim off the oil and other floatables. In most geographic areas the sediment can be disposed of in a sanitary landfill once dewatered. Pollutants are not allowed to be discharged back into the sanitary or storm sewer systems.

- After cleaning via vacuum truck, pumping contractor can refill the StormTrooper™ with water previously drawn out of unit, or haul water to disposal facility and let natural rainfall recharge the unit during future rain events. Replace manhole covers.

- After cleanout is accomplished, obtain a copy of the service truck manifest. Update the StormTrooper™ Monitoring/Maintenance Report and attach a copy of the manifest to the report.

4.0 Safety and Environmental Considerations

- All normal safety precautions should be taken with this equipment to prevent accidents and fires. Normal fire prevention measures must be taken to prevent fire danger from the separated oil.

- Care should be taken to keep the area around the interceptor clean to prevent accidents.

- Dispose of the separated oil properly, preferably by recycling.

- The atmosphere inside the Park Environmental Equipment StormTrooper™ is a confined space and may be hazardous. Entry is not recommended without proper equipment. Follow OSHA confined space entry requirements.

- SAFETY AND ENVIRONMENTAL PROTECTION ARE THE RESPONSIBILITY OF THE USER. PARK EQUIPMENT CO. ASSUMES NO LIABILITY FOR MISUSE OF THIS SEPARATOR OR FOR USE OUTSIDE THE PARAMETERS FOR WHICH IT IS DESIGNED.

(Optional) StormTrooper® Interceptor Monitoring / Maintenance Report

Year:	
Company Name:	
Address:	
City/State/Zip:	
Contact Phone:	
Contact Name:	
StormTrooper® Model	
GPM	

Quarterly Record Keeping

Maintenance Activity	Mar	June	Sept	Dec
Non-Structural Controls				
Manhole Debris Cleaned				
Interceptor Debris Cleaned				
Hose Off Inside Walls				
Debris Screens Cleaned				
Mowing of Stormtrooper				
Structural Controls				
Oil Depth				
Solids Depth				
Pumped Out				
Inspections				
Quarterly				
Annually				
"X" identifies the months in which the activity will be performed (at a minimum).				
*Provided to residents at move-in and available at community locations.				
**Sediment removed from basin per chart on Table 4 or at least one year from move-in of location				

I certify that I supervised or performed StormTrooper® monitoring per local codes and manufacturer's recommended monitoring and maintenance procedures on the dates listed above.

Signed: _____
Owner Or Owner Representative

Print Name: _____

Date Submitted: _____

Per the *"Permanent Stormwater Section" for Regulated Activities on the Edwards Aquifer Recharge Zone and Relating to 30 TAC §213.5(b)(4)(C), (D)(li), (E), and (5), Effective June 1, 1999 a plan for the inspection, maintenance, repair, and, if necessary, retrofit of the permanent BMPs and measures is provided herein.*

This plan has been prepared and certified by the engineer designing the permanent BMPs and measures. This plan has been signed by the owner or responsible party. The plan includes procedures for documenting inspections, maintenance, repairs, and, if necessary, retrofits as well as a discussion of record keeping procedures.

I, Jeffrey Nagy, P.E., a Professional Engineer duly licensed to practice in the State of Texas do hereby certify that the information presented in this document was prepared under my direction and supervision and complies with the proper inspection and maintenance requirements determined by the manufacturer.

Signature: _____ Date: 8/14/2023

License Number: 133255

Address: 13620 Briarwick Drive, Building C
Austin, TX 78729

Phone Number: 512-777-4600

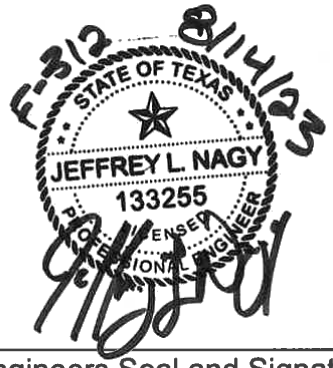

Engineers Seal and Signature

I, Keith Kaderka (Name), acting as Utilities Superintendent (Officer Position) for City of Round Rock (Permittee's Name), have read the Recommended StormTrooper Maintenance Plan, as well as the associated drawings, and agree to implement the requirements described herein.

Signature: _____ Date: 8-4-23

Address: 3400 Sunrise Road

Phone Number:

Attachment J:
Measures for Minimizing Surface Stream Contamination

The proposed permanent BMP for water quality treatment is twelve (12) StormTrooper units, which will minimize surface stream contamination by reducing the TSS in the stormwater from the proposed site. This proposed permanent BMP facility is not immediately adjacent to or discharging directly into surface stream. There are twelve units placed along the proposed storm drain through the proposed Wyoming Springs Drive. The units will be installed so that runoff captured by storm inlets with be routed through a StormTrooper prior to being released into surface streams. There are no proposed use of hydrocarbons or hazardous substances, but in the event of spills, please refer to Attachment A- Spill Response Actions.

There are five (5) proposed outfalls into surface streams in the project site. Moving from south to north through proposed Wyoming Springs Dr, the first outfall is at Culvert A. Culvert A consists of five 8'x4' reinforced concrete box culverts at a 30° skew. Both basins A and B outfall into the culvert, in addition to it carrying the flow of an existing ephemeral stream. To protect against erosion and dissipate the energy of runoff discharging from the box culverts, culvert was proposed a broken-back. Baffle blocks are also proposed within the box culverts to help dissipate velocity flowing out of the culverts.

The next outfall is south of Brushy Creek where the proposed Hairy Man culvert discharges into the creek under proposed bridge. Rock riprap is proposed under the proposed Brushy Creek bridge to help against erosion since the proposed bridge will prevent the growth of any stabilizing vegetation. This riprap is proposed to surround the outfall of the Hairy Man culvert to help prevent erosion from concentrated flow. North of Brushy Creek, Basin C outfalls adjacent to the proposed bridge. The extents of rock riprap were extended in this area to cover downstream of the headwall outfall until flow reaches the ordinary high-water mark (OHWM).

The last two outfalls are at Dry Fork Creek. Basin D outfalls on the south side of the creek, and basin E outfalls on the north side. Rock rip rap is proposed underneath the Dry Fork Creek Bridge, similar to Brushy Creek, surrounding each of the outfalls. This is expected to help with any erosion that may occur from the concentrated flow of storm outfalls.

Attachment K:
Volume and Character of Stormwater

RG-348, *Complying with the Edwards Aquifer Rules: Technical Guidance on Best Management Practices*, was used to calculate the volume and character of stormwater, for water quality purposes. Refer to the Drainage Area Maps and Calculations included in the submitted construction plans for the volume of stormwater.

Water Quality Analysis

A water quality analysis was conducted with the purpose of meeting or exceeding both the Texas Commission on Environmental Quality (TCEQ) and City of Round Rock regulations for increases in impervious cover.

The selected permanent BMP to treat the TSS for this site was the StormTrooper, which has a removal efficiency that varies based on size of the StormTrooper and the size of the contributing area arriving at each specific treatment unit. For this project twelve (12) separate facilities are proposed. By constructing additional lanes on Sam Bass Rd and construction the connection of Wyoming Springs Dr from Creek Bend Blvd to Sam Bass Rd, the proposed project increases the impervious cover by 9.76 acres.

New pavement along Sam Bass Rd does not drain directly into the proposed water quality facilities. Rather the proposed water quality facilities were designed and placed to treat for new pavement constructed through Wyoming Springs and overtreat for new pavement proposed along Sam Bass Rd. By overtreating the proposed impervious cover along Wyoming Springs Dr, thee proposed facilities will successfully mitigate the TSS load caused by the increase of impervious area of 9.76 acres.

The proposed StormTroopers for this project will provide additional TSS removal above the amount require by TCEQ to help mitigate the additional impervious cover added along Sam Bass Rd.

Project Summary		
Pre-development Impervious Area	0.40	Acres
Post-development Area	10.16	Acres
Net increase impervious area	9.76	Acres
Required TSS Removal (80% Removal)	8,495	lbs
Proposed TSS Removal	8,521	lbs

StormTrooper Summary			
StormTrooper ID	Station Location	Unit Model	TSS Removal Provided Onsite (lbs)
WQ-1	121+65.41, 40.00 (LT)	SWAQ-110	554
WQ-2	121+59.01, 6.39 (RT)	SWAQ-110	552
WQ-3	126+43.35, 41.84 (RT)	SWAQ-110	683
WQ-4	126+36.74, 43.24 (LT)	SWAQ-40	903
WQ-5	127+92.67, 42.00 (RT)	SWAQ-40	538
WQ-6	127+69.53, 42.42 (LT)	SWAQ-40	197
WQ-7	129+06.86, 40.07 (LT)	SWAQ-110	788
WQ-8	141+41.97, 31.90 (LT)	SWAQ-110	1063
WQ-9	141+38.05, 31.05 (RT)	SWAQ-110	1170
WQ-10	150+50.77, 42.09 (LT)	SWAQ-40	594
WQ-11	150+56.63, 43.52 (RT)	SWAQ-110	652
WQ-12	155+54.89, 6.69 (LT)	SWAQ-110	827
		Total:	8521

Geologic Assessment

Texas Commission on Environmental Quality

For Regulated Activities on The Edwards Aquifer Recharge/transition Zones and Relating to 30 TAC §213.5(b)(3), Effective June 1, 1999

To ensure that the application is administratively complete, confirm that all fields in the form are complete, verify that all requested information is provided, consistently reference the same site and contact person in all forms in the application, and ensure forms are signed by the appropriate party.

Note: Including all the information requested in the form and attachments contributes to more streamlined technical reviews.

Signature

To the best of my knowledge, the responses to this form accurately reflect all information requested concerning the proposed regulated activities and methods to protect the Edwards Aquifer. My signature certifies that I am qualified as a geologist as defined by 30 TAC Chapter 213.

Print Name of Geologist: Philip C. Pearce, P.G.

Telephone: 210.877.2847

Fax: 210.877.2848

Date: _____

Representing: SWCA Environmental Consultants (TBPG Firm Registration #50159) (Name of Company and TBPG or TBPE registration number)

Signature of Geologist:

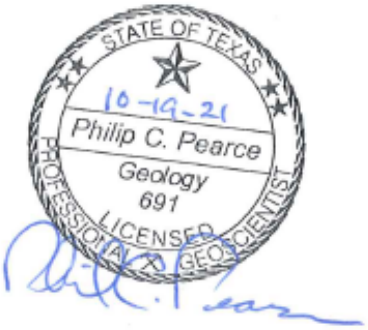

Regulated Entity Name: Wyoming Springs Road Segment 1

Project Information

1. Date(s) Geologic Assessment was performed: October 21, 2019 and October 8, 2021
2. Type of Project:
   - ☒ WPAP
   - ☒ SCS
   - ☐ AST
   - ☐ UST
3. Location of Project:
   - ☒ Recharge Zone
   - ☐ Transition Zone
   - ☐ Contributing Zone within the Transition Zone

4. ☒ **Attachment A - Geologic Assessment Table**. Completed Geologic Assessment Table (Form TCEQ-0585-Table) is attached.

5. ☒ Soil cover on the project site is summarized in the table below and uses the SCS Hydrologic Soil Groups* (Urban Hydrology for Small Watersheds, Technical Release No. 55, Appendix A, Soil Conservation Service, 1986). If there is more than one soil type on the project site, show each soil type on the site Geologic Map or a separate soils map.

Table 1 - Soil Units, Infiltration Characteristics and Thickness

Soil Name	Group*	Thickness(feet)
Okalla soils (Oc), 0-1 percent slopes, channeled, frequently flooded	D	8
Eckrant Cobbly Clay 1-8% slopes (EaD)	D	1-2
Eckrant Extremely Stony Clay 0-3% slopes (EeB)	D	1-2
Eckrant Rock Outcrop complex 1-10% slopes (EeB)	D	0-1
Georgetown stony clay loam 1 to 3 percent slopes (GsB)	D	1-3

** Soil Group Definitions (Abbreviated)*

A. Soils having a high infiltration rate when thoroughly wetted.

B. Soils having a moderate infiltration rate when thoroughly wetted.

C. Soils having a slow infiltration rate when thoroughly wetted.

D. Soils having a very slow infiltration rate when thoroughly wetted.

6. ☒ **Attachment B – Stratigraphic Column**. A stratigraphic column showing formations, members, and thicknesses is attached. The outcropping unit, if present, should be at the top of the stratigraphic column. Otherwise, the uppermost unit should be at the top of the stratigraphic column.

7. ☒ **Attachment C – Site Geology**. A narrative description of the site specific geology including any features identified in the Geologic Assessment Table, a discussion of the potential for fluid movement to the Edwards Aquifer, stratigraphy, structure(s), and karst characteristics is attached.

8. ☒ **Attachment D – Site Geologic Map(s)**. The Site Geologic Map must be the same scale as the applicant's Site Plan. The minimum scale is 1": 400'

   Applicant's Site Plan Scale: 1" = 50'
   Site Geologic Map Scale: 1" = 50'
   Site Soils Map Scale (if more than 1 soil type): 1" = 1,000'

9. Method of collecting positional data:

   ☒ Global Positioning System (GPS) technology.
   ☐ Other method(s). Please describe method of data collection: _____

10. ☒ The project site and boundaries are clearly shown and labeled on the Site Geologic Map.

11. ☒ Surface geologic units are shown and labeled on the Site Geologic Map.

12. ☒ Geologic or manmade features were discovered on the project site during the field investigation. They are shown and labeled on the Site Geologic Map and are described in the attached Geologic Assessment Table.

    ☐ Geologic or manmade features were not discovered on the project site during the field investigation.

13. ☒ The Recharge Zone boundary is shown and labeled, if appropriate.

14. All known wells (test holes, water, oil, unplugged, capped and/or abandoned, etc.): If applicable, the information must agree with Item No. 20 of the WPAP Application Section.

    ☐ There are _____ (#) wells present on the project site and the locations are shown and labeled. (Check all of the following that apply.)
    ☐ The wells are not in use and have been properly abandoned.
    ☐ The wells are not in use and will be properly abandoned.
    ☐ The wells are in use and comply with 16 TAC Chapter 76.
    ☒ There are no wells or test holes of any kind known to exist on the project site.

Administrative Information

15. ☒ Submit one (1) original and one (1) copy of the application, plus additional copies as needed for each affected incorporated city, groundwater conservation district, and county in which the project will be located. The TCEQ will distribute the additional copies to these jurisdictions. The copies must be submitted to the appropriate regional office.

Geologic Assessment for the Wyoming Springs Drive Segment 1 Project, Round Rock, Williamson County, Texas

OCTOBER 2021

PREPARED FOR

Halff Associates, Inc.

PREPARED BY

SWCA Environmental Consultants

Texas Board of Professional Geoscientists, Firm Registration No. 50159

GEOLOGIC ASSESSMENT
FOR THE WYOMING SPRINGS DRIVE SEGMENT 1 PROJECT, ROUND ROCK, WILLIAMSON COUNTY, TEXAS

Prepared for

Halff Associates Inc.
9500 Amberglen Boulevard
Building F, Suite 125
Austin, Texas 78729



Prepared by

Philip Pearce, P.G.

Ben Dilly, G.I.T.

SWCA Environmental Consultants
Texas Board of Professional Geoscientists, Firm Registration No. 50159
4949 North Loop 1604 West
Building 2, Suite 235
San Antonio, Texas, 78249
www.swca.com

SWCA Project No. 55828

October 2021

This page intentionally left blank.

CONTENTS

1 Introduction 1

2 Methodology 1

3 Results 1

3.1 Project Overview 1

3.2 Geology 1

3.3 Soils 2

3.4 Site Hydrogeologic Assessment 4

4 References 7

Appendices

Appendix A Texas Commission on Environmental Quality (TCEQ) Forms
Attachment A – Geologic Assessment Table
Attachment B – Stratigraphic Column
Attachment C – Narrative Description of Site Geology
Attachment D – Site Geologic and Soil Units Maps
Attachment E – Photographic Log

Figures

Figure 1. Project Area location map. 3

Figure 2. Water resources near the Project Area and local water wells (TWDB 2019). 5

Tables

Table 1. Project Area Soils Detail 2

Table 2. Depth to Water at Six Nearby Water Wells 4

This page intentionally left blank.

1 INTRODUCTION

The City of Round Rock, Texas, proposes to extend Wyoming Springs Drive from Brightwater Boulevard to Farm-to-Market (FM) 3406 (Project), a distance of approximately 0.9 mile covering approximately 9.9 acres (Project Area, see **Figure 1**). The Project includes construction of a new location, four-lane divided roadway connecting two existing segments of Wyoming Springs Drive (also four-lane, divided roadways). Best management practices (BMPs) will be implemented during construction (as required by the Edwards Aquifer Rules, administered by the Texas Commission on Environmental Quality [TCEQ]) to minimize potential secondary impacts through stormwater runoff and sediment deposition into surface waters. SWCA Environmental Consultants (SWCA) was contracted to conduct a geologic assessment for the Project Area. SWCA investigated the currently defined limits of construction for the Project. The final acreage of Project disturbance is to-be-determined and would be based on the final Project designs.

This narrative geologic assessment accompanies the Texas Commission on Environmental Quality (TCEQ) geologic assessment form TCEQ-0585 completed for the Project in Round Rock, Williamson County, Texas (**Figure 1**).

2 METHODOLOGY

Prior to conducting fieldwork, SWCA Environmental Consultants (SWCA) scientists studied documents pertaining to known caves within the vicinity of the Project Area in an attempt to gather information related to documented caves (unpublished data related to SWCA et al. 2008 and other area projects). SWCA also examined aerial photography, mapped fault lines, and Project Area geology prior to fieldwork commencement.

SWCA scientists conducted a field survey on October 21, 2019 and October 8, 2021. The pedestrian survey was completed by walking parallel transects spaced approximately 50 feet apart as directed by the TCEQ in the *Instructions to Geologists for Geologic Assessments on the Edwards Aquifer Recharge/ Transition Zones* (Rev. 10-01-04). Closer spacing was used where vegetation inhibited clear observation. The SWCA scientist carefully examined all potential karst features for subsurface extent; including depressions, holes, and animal burrows. SWCA used several techniques for this effort, including probing with a digging implement to determine the thickness and consistency of fill material and feeling for air flow, which may indicate the presence of a sub-surface void space. Other techniques included recording notable feature characteristics, such as vegetation types or a semi-circular burrow mound produced by small mammal activity.

3 RESULTS

3.1 Project Overview

The Project lies within the Recharge Zone of the Northern Segment of the Edwards Aquifer (TCEQ 2019). The topography generally slopes towards Brushy Creek, which roughly intersects the center of the Project Area. The Project elevation ranges from approximately 740 to 808 feet above mean sea level.

3.2 Geology

Rock outcropping on the Project Area is Cretaceous in age and consists of the Edwards Limestone. The geology of the Project Area has been mapped most recently at a useful scale by Collins (1997) and SWCA

finds this interpretation of the geology to be generally accurate. A stratigraphic column is included in **Appendix A**, **Attachment B**.

The Project Area occurs along the Balcones Fault Zone (BFZ) within the Edwards Aquifer Recharge Zone (EARZ). Structural down-warping occurred with the Gulf of Mexico's ancestral formation during the middle Tertiary. The earth's crust was stretched in response and the BFZ formed along a zone of weakness, which currently marks the boundary between the Edwards Plateau and the Gulf Coastal Plain in central Texas. This zone is characterized by a series of northeast-trending, predominantly normal, nearly vertical, en echelon faults. No faults cross the Project Area, but a fault is present to the northeast of the Project Area (Collins 1997).

Recharge into the Edwards Aquifer primarily occurs in areas where the Edwards Limestone and Georgetown Formation are exposed at the surface. Most recharge is from direct infiltration via precipitation and streamflow loss. Recharge occurs predominantly along secondary porosity features such as faults, fractures, and karst features (caves, solution cavities, sinkholes, etc.). Karst features commonly form along joints, fractures, and bedding plane surfaces in the Edwards Limestone and Georgetown Formation.

3.3 Soils

The Natural Resources Conservation Service (2019) identifies the following six soil units within the Project Area (**Table 1**):

Table 1. Project Area Soils Detail

Soil Name	Hydric	Hydrologic Soil Group*	Drainage Class	Frequency of Flooding/ Ponding	Depth to Water Table (inches)
GsB: Georgetown stony clay loam, 1 to 3 percent slopes	No	D	Well drained	None	80+
EaD: Eckrant cobbly clay, 1 to 8 percent slopes					
EeB: Eckrant extremely stony clay, 0 to 3 percent slopes					
ErE: Eckrant-Rock outcrop association, 1 to 10 percent slopes					
Oc: Oakalla soils, 0 to 1 percent slopes					

Data Source: Natural Resources Conservation Service 2019.

* Group D – Soils had very slow infiltration rates when thoroughly wetted and exhibit the highest potential for runoff.

All Project Area soil types are considered "D" hydrologic soil group classification, which has a very slow infiltration rate when thoroughly wetted. Project Area mapped soil units are presented on an aerial map in **Appendix A**, **Attachment D**.

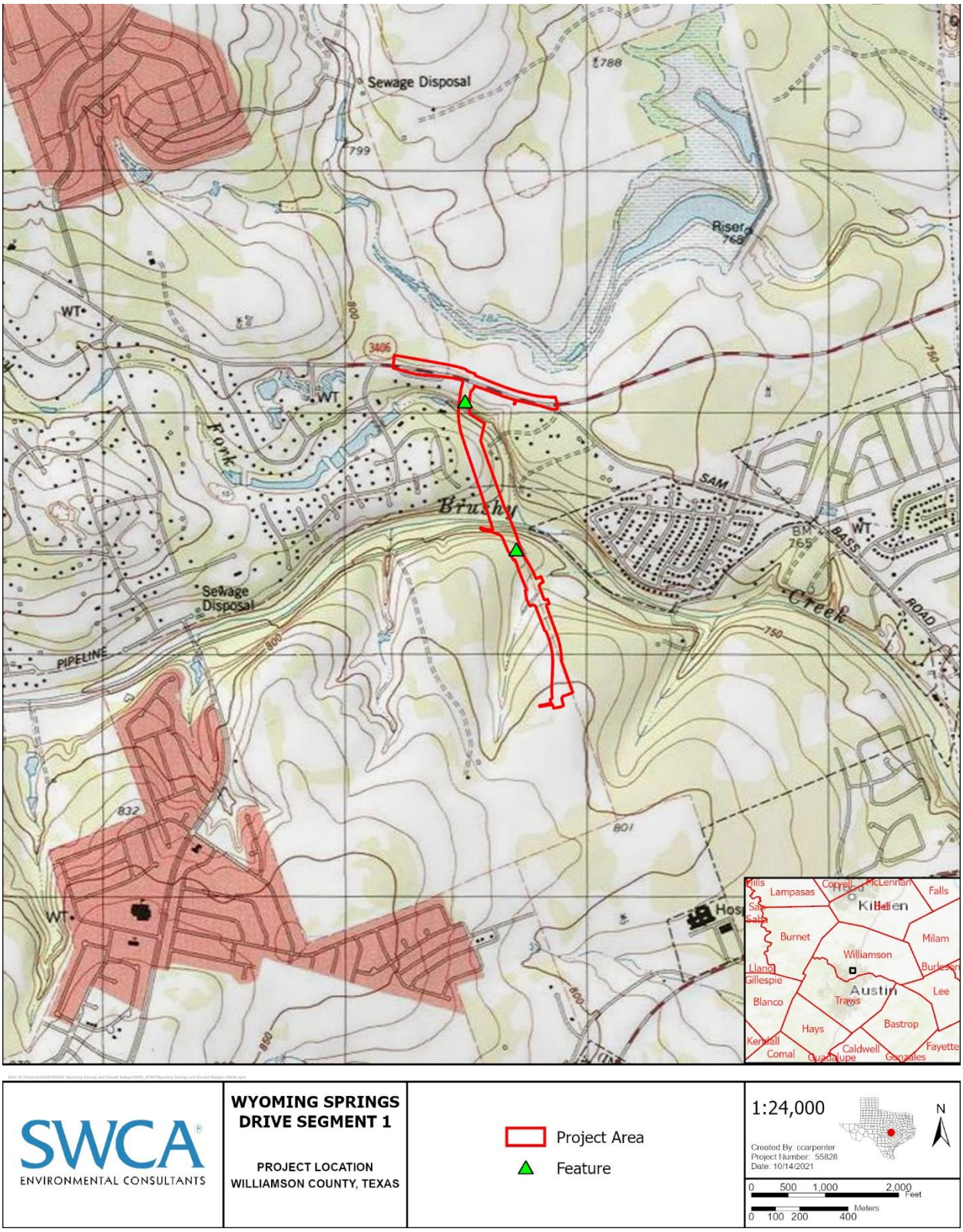

Figure 1. Project Area location map.

3.4 Site Hydrogeologic Assessment

SWCA identified two geologic features within the Project Area, which are depicted on the geologic map (**Appendix A**, **Attachment D**). The features are described in the geologic assessment table (**Appendix A**, **Attachment A**).

Feature F-1 is a non-karst closed depression that appears to have been formed possibly where a tree was removed. Excavation revealed a slight color change of clayey soil from black to brown. No rim rock is present. Due to the non-karst origin, thick soil showing a color change with depth, and a lack of rim rock, the probability of rapid infiltration is low.

Feature F-2 is an opening between blocks of rock in unconsolidated fill material. Soil has washed down between the rocks leaving a void within the fill material. No bedrock is present, and the void is not karst. Due to the non-karst origin and lack of exposed bedrock, the probability of rapid infiltration is low.

Due to the lack of sensitive recharge features, the overall potential for fluid migration to the Edwards Aquifer within the Project Area appears relatively low compared to background infiltration rates. Based on water levels measured in nearby water wells, the depth to water in the Edwards Aquifer below-ground surface in the vicinity of the Project Area appears to range from about 13 to approximately 52 feet below land surface (**Table 2**, **Figure 2**)(Texas Water Development Board 2019).

Table 2. Depth to Water at Six Nearby Water Wells

Water Well	Depth to Water (feet)	Year Measured	Distance from Project (feet)
5827707	22	1977	90.1
5827702	16.1	1972	157.9
5827721	48–52	2005-2011	541.3
5827715	16.4	1981	671.7
5827715	16–22	1978-1981	671.7
5827708	13	1977	1935.8
5827709	58	1977	2468.9

Source: Texas Water Development Board 2019

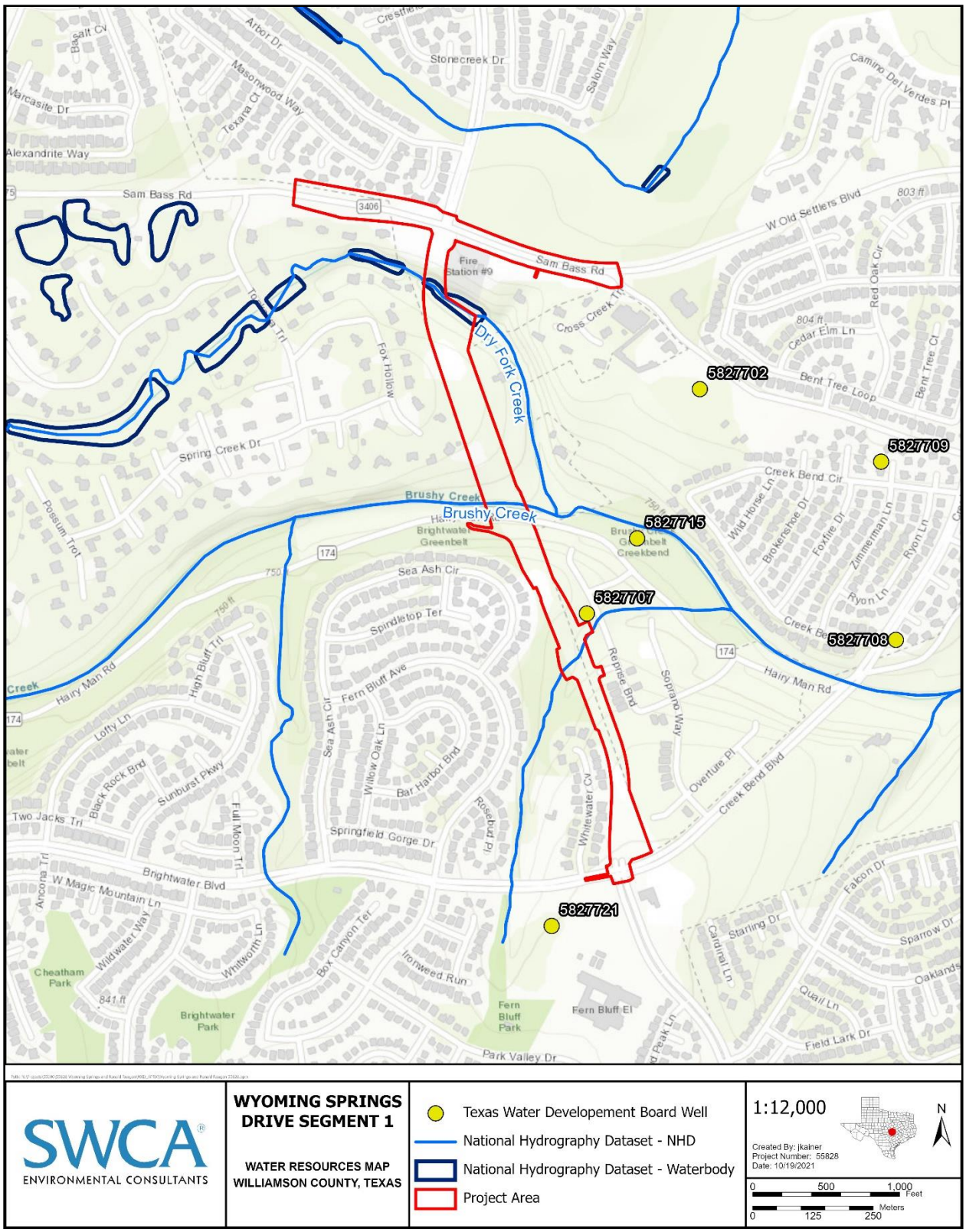

Figure 2. Water resources near the Project Area and local water wells (TWDB 2019).

The Comanche Peak Formation, which underlies the Edwards Limestone, is exposed in the banks of Brushy Creek upstream, approximately 6,000 feet west of the Project Area. The Georgetown Formation, which overlies the Edwards Limestone, outcrops on the bank of Brushy Creek approximately 5,200 feet east of the Project Area. This indicates the Edwards Limestone dips and/or is displaced downward toward the east, which increases the saturated thickness of the Edwards Aquifer from west to east. Groundwater recharging through the Edwards Limestone to the west of the Project Area may be perched on top of the Comanche Peak and discharge as seeps or springs near the contact between the Edwards Limestone and the Comanche Peak.

Several ponds are present west of the northern limits of the Project Area and aerial imagery indicates high water clarity with no observable water level change over time, even during the extreme drought of 2011 and 2012. There is strong possibility these ponds derive at least some flow from a groundwater source. SWCA specialists examined Dry Fork Creek crossings west of the Project Area and noticed a significant streamflow increase, which may indicate Dry Fork Creek is a gaining stream. SWCA specialists also observed active springs within Tonkawa Springs Park, approximately 1,000 feet west of the Project Area. SWCA also observed flowing water along a bar ditch of Arrowhead Circle. The source of the flowing water in the bar ditch appeared to come from ponds located upslope of the street. Krienke Spring, which is known habitat for the Jollyville Plateau Salamander, is present approximately 600 feet upstream of the Project Area within Dry Fork Creek. These ancillary observations suggest groundwater within the Edwards aquifer perched on the Comanche Peak is shallow and discharges at the ground surface in many locations in the Project vicinity.

The City of Round Rock Ordinance (Ordinance) requires buffers around regulated streams and springs, and enhanced water quality measures atop the EARZ and within the City of Round Rock Extra-Territorial Jurisdiction. The Ordinance also requires that the Professional Geoscientist identifies regulated streams and springs in the geologic assessment. Brushy Creek and Dry Fork Creek both cross the Project Area.

4 REFERENCES

Collins, E.W. 1997. Geologic map of the Round Rock quadrangle, Texas. University of Texas at Austin, Bureau of Economic Geology Open-File Map OFM0013, scale 1:24,000.

Natural Resource Conservation Service (NRCS). 2019. Soil Survey Staff, Natural Resources Conservation Service, U.S. Department of Agriculture. Web Soil Survey. Available at: http://websoilsurvey.nrcs.usda.gov/. Accessed October 2019.

SWCA Environmental Consultants (SWCA), Smith, Robertson, Elliott, Glen, Klein, & Bell, LLP, Prime Strategies, Inc., Texas Perspectives, Inc. 2008. Williamson County Regional Habitat Conservation Plan. Prepared for Williamson County Conservation Foundation and The Honorable Lisa Birkman.

Texas Commission on Environmental Quality (TCEQ). 2019. Edwards Aquifer Viewer v3.8. Available at: http://tceq.maps.arcgis.com/apps/webappviewer/index.html?id=2e5afa3ba8144c30a49d3dc1ab49edcd. Accessed October 2019.

Texas Commission on Environmental Quality. (TCEQ). Instructions to Geologists for Geologic Assessments on the Edwards Aquifer Recharge/Transition Zones. TCEQ-0585-Instructions (Rev. 10-01-04).

Texas Water Development Board (TWDB). 2019. Water Data Interactive, interactive GIS database. Available at: http://www2.twdb.texas.gov/apps/waterdatainteractive/groundwaterdataviewer. Accessed November 2019.

This page intentionally left blank.

APPENDIX A

Texas Commission on Environmental Quality (TCEQ) Forms

Geologic Assessment

Texas Commission on Environmental Quality

For Regulated Activities on The Edwards Aquifer Recharge/transition Zones and Relating to 30 TAC §213.5(b)(3), Effective June 1, 1999

To ensure that the application is administratively complete, confirm that all fields in the form are complete, verify that all requested information is provided, consistently reference the same site and contact person in all forms in the application, and ensure forms are signed by the appropriate party.

Note: Including all the information requested in the form and attachments contributes to more streamlined technical reviews.

Signature

To the best of my knowledge, the responses to this form accurately reflect all information requested concerning the proposed regulated activities and methods to protect the Edwards Aquifer. My signature certifies that I am qualified as a geologist as defined by 30 TAC Chapter 213.

Print Name of Geologist: Philip C. Pearce, P.G.

Telephone: 210.877.2847

Fax: 210.877.2848

Date: _____

Representing: SWCA Environmental Consultants (TBPG Firm Registration #50159) (Name of Company and TBPG or TBPE registration number)

Signature of Geologist:

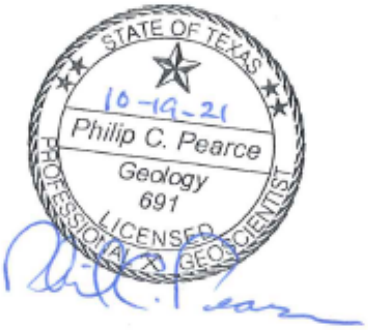

Regulated Entity Name: Wyoming Springs Road Segment 1

Project Information

1. Date(s) Geologic Assessment was performed: October 21, 2019 and October 8, 2021
2. Type of Project:
   - ☒ WPAP
   - ☒ SCS
   - ☐ AST
   - ☐ UST
3. Location of Project:
   - ☒ Recharge Zone
   - ☐ Transition Zone
   - ☐ Contributing Zone within the Transition Zone

4. ☒ **Attachment A - Geologic Assessment Table**. Completed Geologic Assessment Table (Form TCEQ-0585-Table) is attached.

5. ☒ Soil cover on the project site is summarized in the table below and uses the SCS Hydrologic Soil Groups* (Urban Hydrology for Small Watersheds, Technical Release No. 55, Appendix A, Soil Conservation Service, 1986). If there is more than one soil type on the project site, show each soil type on the site Geologic Map or a separate soils map.

Table 1 - Soil Units, Infiltration Characteristics and Thickness

Soil Name	Group*	Thickness(feet)
Okalla soils (Oc), 0-1 percent slopes, channeled, frequently flooded	D	8
Eckrant Cobbly Clay 1-8% slopes (EaD)	D	1-2
Eckrant Extremely Stony Clay 0-3% slopes (EeB)	D	1-2
Eckrant Rock Outcrop complex 1-10% slopes (EeB)	D	0-1
Georgetown stony clay loam 1 to 3 percent slopes (GsB)	D	1-3

** Soil Group Definitions (Abbreviated)*

A. Soils having a high infiltration rate when thoroughly wetted.

B. Soils having a moderate infiltration rate when thoroughly wetted.

C. Soils having a slow infiltration rate when thoroughly wetted.

D. Soils having a very slow infiltration rate when thoroughly wetted.

6. ☒ **Attachment B – Stratigraphic Column**. A stratigraphic column showing formations, members, and thicknesses is attached. The outcropping unit, if present, should be at the top of the stratigraphic column. Otherwise, the uppermost unit should be at the top of the stratigraphic column.

7. ☒ **Attachment C – Site Geology**. A narrative description of the site specific geology including any features identified in the Geologic Assessment Table, a discussion of the potential for fluid movement to the Edwards Aquifer, stratigraphy, structure(s), and karst characteristics is attached.

8. ☒ **Attachment D – Site Geologic Map(s)**. The Site Geologic Map must be the same scale as the applicant's Site Plan. The minimum scale is 1": 400'

   Applicant's Site Plan Scale: 1" = 50'
   Site Geologic Map Scale: 1" = 50'
   Site Soils Map Scale (if more than 1 soil type): 1" = 1,000'

9. Method of collecting positional data:

   ☒ Global Positioning System (GPS) technology.
   ☐ Other method(s). Please describe method of data collection: _____

10. ☒ The project site and boundaries are clearly shown and labeled on the Site Geologic Map.

11. ☒ Surface geologic units are shown and labeled on the Site Geologic Map.

12. ☒ Geologic or manmade features were discovered on the project site during the field investigation. They are shown and labeled on the Site Geologic Map and are described in the attached Geologic Assessment Table.

    ☐ Geologic or manmade features were not discovered on the project site during the field investigation.

13. ☒ The Recharge Zone boundary is shown and labeled, if appropriate.

14. All known wells (test holes, water, oil, unplugged, capped and/or abandoned, etc.): If applicable, the information must agree with Item No. 20 of the WPAP Application Section.

    ☐ There are _____ (#) wells present on the project site and the locations are shown and labeled. (Check all of the following that apply.)
    ☐ The wells are not in use and have been properly abandoned.
    ☐ The wells are not in use and will be properly abandoned.
    ☐ The wells are in use and comply with 16 TAC Chapter 76.
    ☒ There are no wells or test holes of any kind known to exist on the project site.

Administrative Information

15. ☒ Submit one (1) original and one (1) copy of the application, plus additional copies as needed for each affected incorporated city, groundwater conservation district, and county in which the project will be located. The TCEQ will distribute the additional copies to these jurisdictions. The copies must be submitted to the appropriate regional office.

ATTACHMENT A

Geologic Assessment Table

GEOLOGIC ASSESSMENT TABLE

PROJECT NAME: Wyoming Springs Road Segment 1

LOCATION			FEATURE CHARACTERISTICS												EVALUATION			PHYSICAL SETTING		
1A	1B *	1C*	2A	2B	3	4			5	5A	6	7	8A	8B	9	10		11		12
FEATURE ID	LATITUDE	LONGITUDE	FEATURE TYPE	POINTS	FORMATION	DIMENSIONS (FEET)			TREND (DEGREES)	DOM	DENSITY (NO/FT)	APERTURE (FEET)	INFILL	RELATIVE INFILTRATION RATE	TOTAL	SENSITIVITY		CATCHMENT AREA (ACRES)		TOPOGRAPHY
						X	Y	Z		10						<40	≥40	<1.6	≥1.6	
F-1	30.524757	-97.721294	CD	5	Ked	8	10	1	-	0			F	5	10	X		X		Hillside
F-2	30.530301	-97.723431	CD	5	Fill	1.7	1.7	1.5	-	0			C	15	20	X		X		Hillside

* DATUM: NAD 83

2A TYPE	TYPE	2B POINTS
C	Cave	30
SC	Solution cavity	20
SF	Solution-enlarged fracture(s)	20
F	Fault	20
O	Other natural bedrock features	5
MB	Manmade feature in bedrock	30
SW	Swallow hole	30
SH	Sinkhole	20
CD	Non-karst closed depression	5
Z	Zone, clustered or aligned features	30

8A INFILLING	
N	None, exposed bedrock
C	Coarse - cobbles, breakdown, sand, gravel
O	Loose or soft mud or soil, organics, leaves, sticks, dark colors
F	Fines, compacted clay-rich sediment, soil profile, gray or red colors
V	Vegetation. Give details in narrative description
FS	Flowstone, cements, cave deposits
X	Other materials

12 TOPOGRAPHY
Cliff, Hilltop, Hillside, Drainage, Floodplain, Streambed

I have read, I understood, and I have followed the Texas Commission on Environmental Quality's Instructions to Geologists. The information presented here complies with that document and is a true representation of the conditions observed in the field.
My signature certifies that I am qualified as a geologist as defined by 30 TAC Chapter 213.

Date 10/19/2021

Sheet 1 of 1

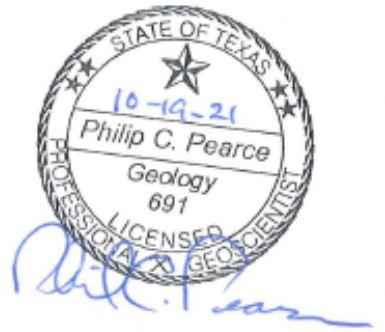

TCEQ-0585-Table (Rev. 10-01-04)

ATTACHMENT B

Stratigraphic Column

Stratigraphic Column

Upper Cretaceous	Upper Confining Units	Navarro and Taylor Groups, undivided; 600 feet thick
		Austin Group; 325–420 feet thick
		Eagle Ford Group; 25–65 feet thick
		Buda Limestone; 40–50 feet thick
		Del Rio Clay; 40–70 feet thick
Lower Cretaceous	Edwards Aquifer	Georgetown Formation; 30–80 feet thick
		Edwards Limestone; Up to 200 feet thick
		Comanche Peak Formation; 80 feet thick
	Lower Confining Units	Walnut Formation; Up to 120 feet thick
		Upper member of Glen Rose Limestone; 500 feet thick

Note: The shaded areas represent the lithology that outcrops in the Project Area.

ATTACHMENT C

Narrative Description of Site Geology

PLEASE REFER TO SECTION 3.2 OF THIS REPORT FOR GEOLOGIC NARRATIVE DESCRIPTION

ATTACHMENT D

Site Geologic and Soil Unit Maps



STATE OF TEXAS
10-19-21
Philip C. Pearce
Geology
691
LICENSED
PROFESSIONAL GEOSCIENTIST

SWCA®
ENVIRONMENTAL CONSULTANTS

WYOMING SPRINGS DRIVE SEGMENT 1

GEOLOGIC MAP
WILLIAMSON COUNTY, TEXAS

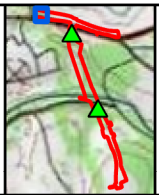

Project Area
Contour Line
Geologic Unit
Ked

1 inch = 50 feet
1:600
Created By: ccarpenter
Project Number: 55828
Date: 10/14/2021



N

0 25 50 Feet
0 5 10 Meters



STATE OF TEXAS
10-19-21
Philip C. Pearce
Geology
691
LICENSED PROFESSIONAL GEOSCIENTIST

Path: N:\Projects\55900\55828 Wyoming Springs and Ronald Reagan\MXD_APRX\Wyoming Springs and Ronald Reagan 55828.aprx

SWCA® ENVIRONMENTAL CONSULTANTS

WYOMING SPRINGS DRIVE SEGMENT 1

GEOLOGIC MAP
WILLIAMSON COUNTY, TEXAS

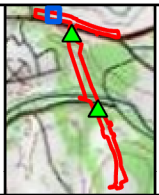

Project Area
Contour Line
Geologic Unit
Ked

1 inch = 50 feet
1:600
Created By: ccarpenter
Project Number: 55828
Date: 10/14/2021



N

0 25 50 Feet
0 5 10 Meters



STATE OF TEXAS
10-19-21
Philip C. Pearce
Geology
691
LICENSED
PROFESSIONAL GEOSCIENTIST

SWCA®
ENVIRONMENTAL CONSULTANTS

WYOMING SPRINGS DRIVE SEGMENT 1

GEOLOGIC MAP
WILLIAMSON COUNTY, TEXAS

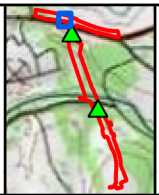

Project Area
Contour Line
Geologic Unit
Ked

1 inch = 50 feet
1:600
Created By: ccarpenter
Project Number: 55828
Date: 10/14/2021



N

0 25 50 Feet
0 5 10 Meters



STATE OF TEXAS
10-19-21
Philip C. Pearce
Geology
691
LICENSED
PROFESSIONAL GEOSCIENTIST

SWCA ENVIRONMENTAL CONSULTANTS

WYOMING SPRINGS DRIVE SEGMENT 1

GEOLOGIC MAP
WILLIAMSON COUNTY, TEXAS

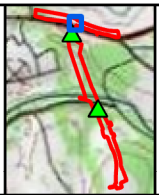

Project Area
Contour Line
Geologic Unit
Ked

1 inch = 50 feet
1:600
Created By: ccarpenter
Project Number: 55828
Date: 10/14/2021

N

0 25 50 Feet
0 5 10 Meters



STATE OF TEXAS
10-19-21
Philip C. Pearce
Geology
691
LICENSED
PROFESSIONAL GEOSCIENTIST

SWCA ENVIRONMENTAL CONSULTANTS

WYOMING SPRINGS DRIVE SEGMENT 1

GEOLOGIC MAP
WILLIAMSON COUNTY, TEXAS

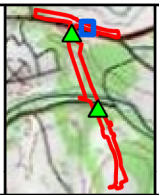

Project Area
Contour Line
Geologic Unit
Ked

1 inch = 50 feet
1:600
Created By: ccarpenter
Project Number: 55828
Date: 10/14/2021



N

0 25 50 Feet
0 5 10 Meters



STATE OF TEXAS
10-19-21
Philip C. Pearce
Geology
691
LICENSED
PROFESSIONAL GEOSCIENTIST

SWCA®
ENVIRONMENTAL CONSULTANTS

WYOMING SPRINGS DRIVE SEGMENT 1

GEOLOGIC MAP
WILLIAMSON COUNTY, TEXAS

Project Area
Contour Line
Geologic Unit
Ked

1 inch = 50 feet
1:600
Created By: ccarpenter
Project Number: 55828
Date: 10/14/2021

N

0 25 50 Feet
0 5 10 Meters

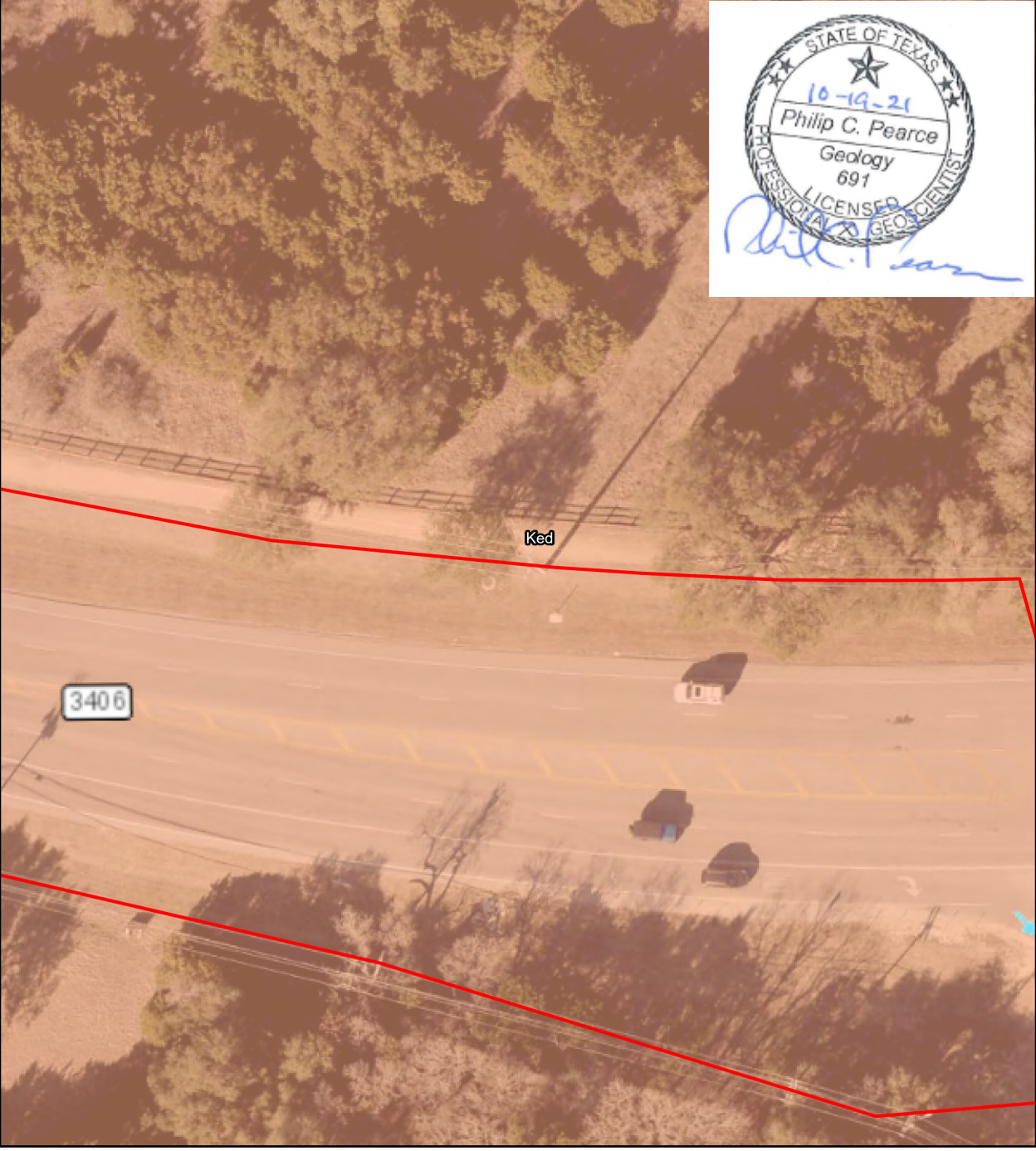

STATE OF TEXAS
10-19-21
Philip C. Pearce
Geology
691
LICENSED
PROFESSIONAL GEOSCIENTIST

Path: N:\Projects\55000\55828 Wyoming Springs and Ronald Reagan\MXD_APRX\Wyoming Springs and Ronald Reagan 55828.aprx

SWCA ENVIRONMENTAL CONSULTANTS

WYOMING SPRINGS DRIVE SEGMENT 1

GEOLOGIC MAP
WILLIAMSON COUNTY, TEXAS

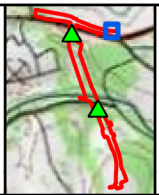

Project Area

Geologic Unit

Ked

1 inch = 50 feet

1:600

Created By: ccarpenter
Project Number: 55828
Date: 10/14/2021



N

0 25 50 Feet

0 5 10 Meters

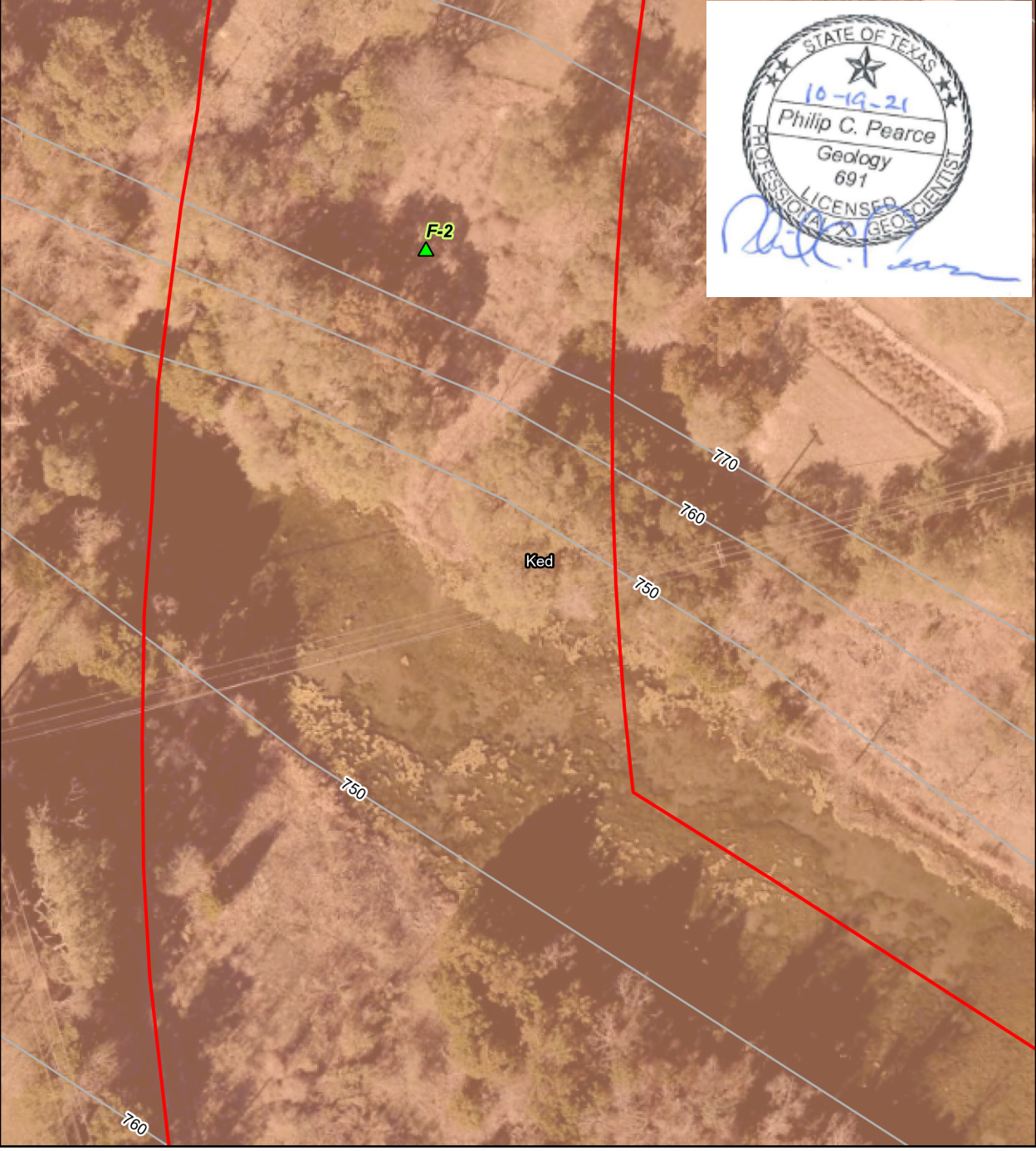

STATE OF TEXAS
10-19-21
Philip C. Pearce
Geology
691
LICENSED PROFESSIONAL GEOSCIENTIST

Path: N:\Projects\55000\55828 Wyoming Springs and Ronald Reagan\MXD_APRX\Wyoming Springs and Ronald Reagan 55828.aprx

SWCA® ENVIRONMENTAL CONSULTANTS

WYOMING SPRINGS DRIVE SEGMENT 1

GEOLOGIC MAP
WILLIAMSON COUNTY, TEXAS

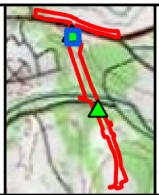

Project Area
Feature
Contour Line

Geologic Unit
Ked

1 inch = 50 feet
1:600

Created By: ccarpenter
Project Number: 55828
Date: 10/14/2021



N

0 25 50 Feet
0 5 10 Meters

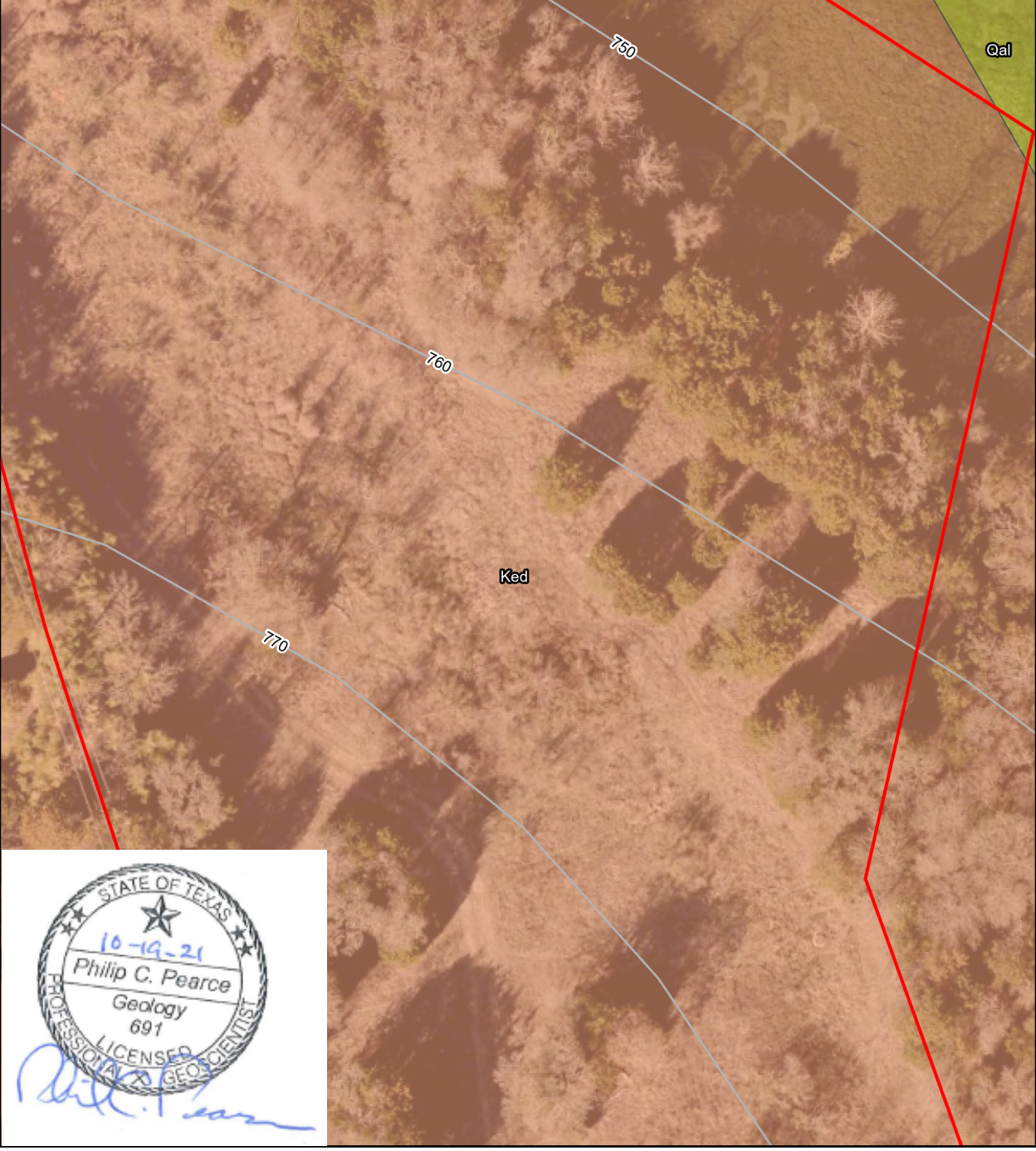

STATE OF TEXAS
10-19-21
Philip C. Pearce
Geology
691
LICENSED
PROFESSIONAL GEOSCIENTIST

Path: N:\Projects\55000\55828 Wyoming Springs and Ronald Reagan\MXD_APRX\Wyoming Springs and Ronald Reagan 55828.aprx

SWCA®
ENVIRONMENTAL CONSULTANTS

WYOMING SPRINGS DRIVE SEGMENT 1

GEOLOGIC MAP
WILLIAMSON COUNTY, TEXAS

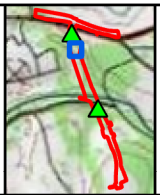

Project Area
Contour Line
Geologic Unit
Ked
Qal

1 inch = 50 feet
1:600
Created By: ccarpenter
Project Number: 55828
Date: 10/14/2021



N

0 25 50 Feet
0 5 10 Meters

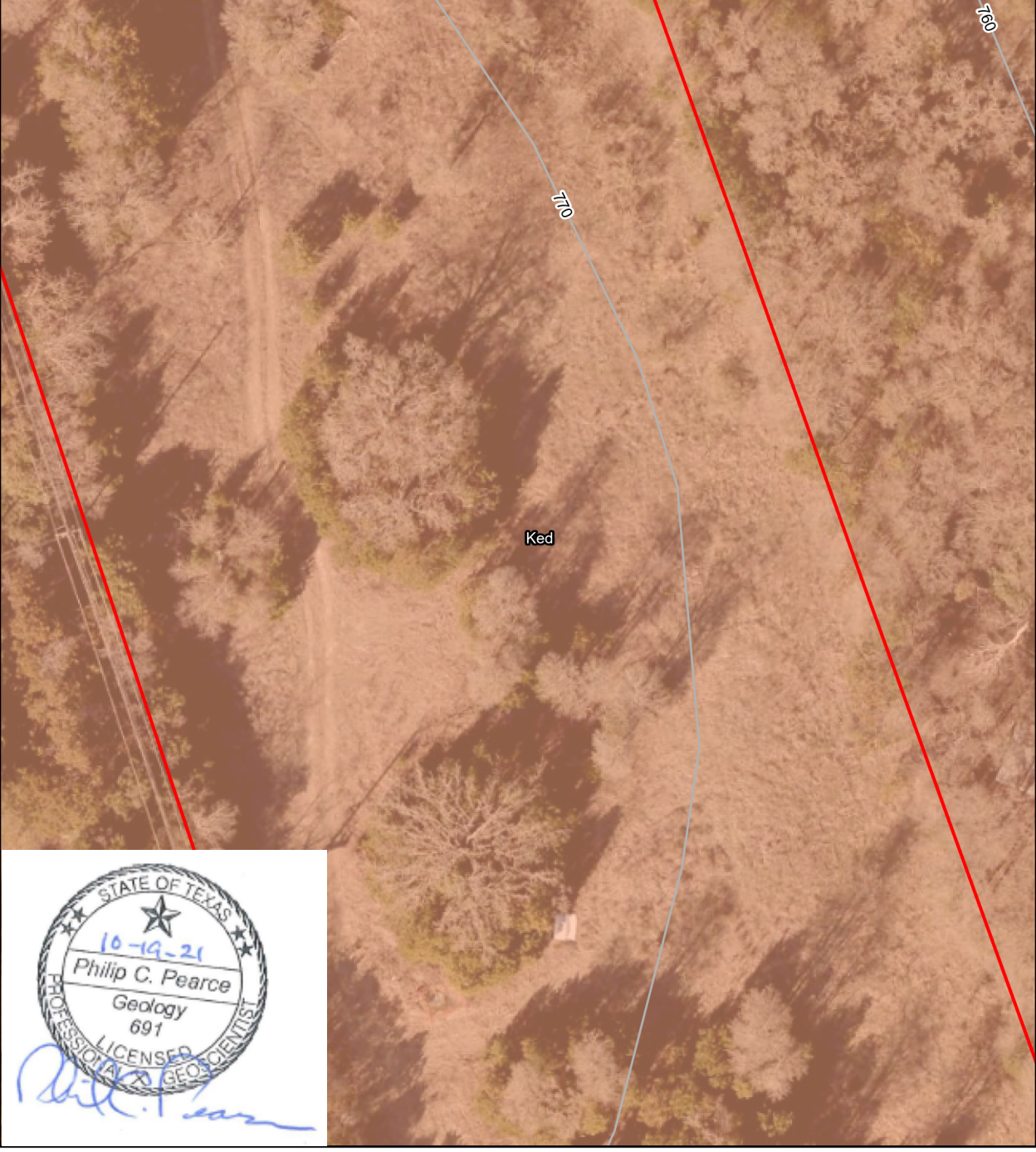

STATE OF TEXAS
10-19-21
Philip C. Pearce
Geology
691
LICENSED
PROFESSIONAL GEOSCIENTIST

SWCA®
ENVIRONMENTAL CONSULTANTS

WYOMING SPRINGS DRIVE SEGMENT 1

GEOLOGIC MAP
WILLIAMSON COUNTY, TEXAS

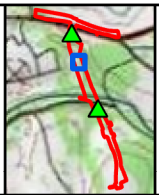

Project Area
Contour Line
Geologic Unit
Ked

1 inch = 50 feet
1:600
Created By: ccarpenter
Project Number: 55828
Date: 10/14/2021



N

0 25 50 Feet
0 5 10 Meters

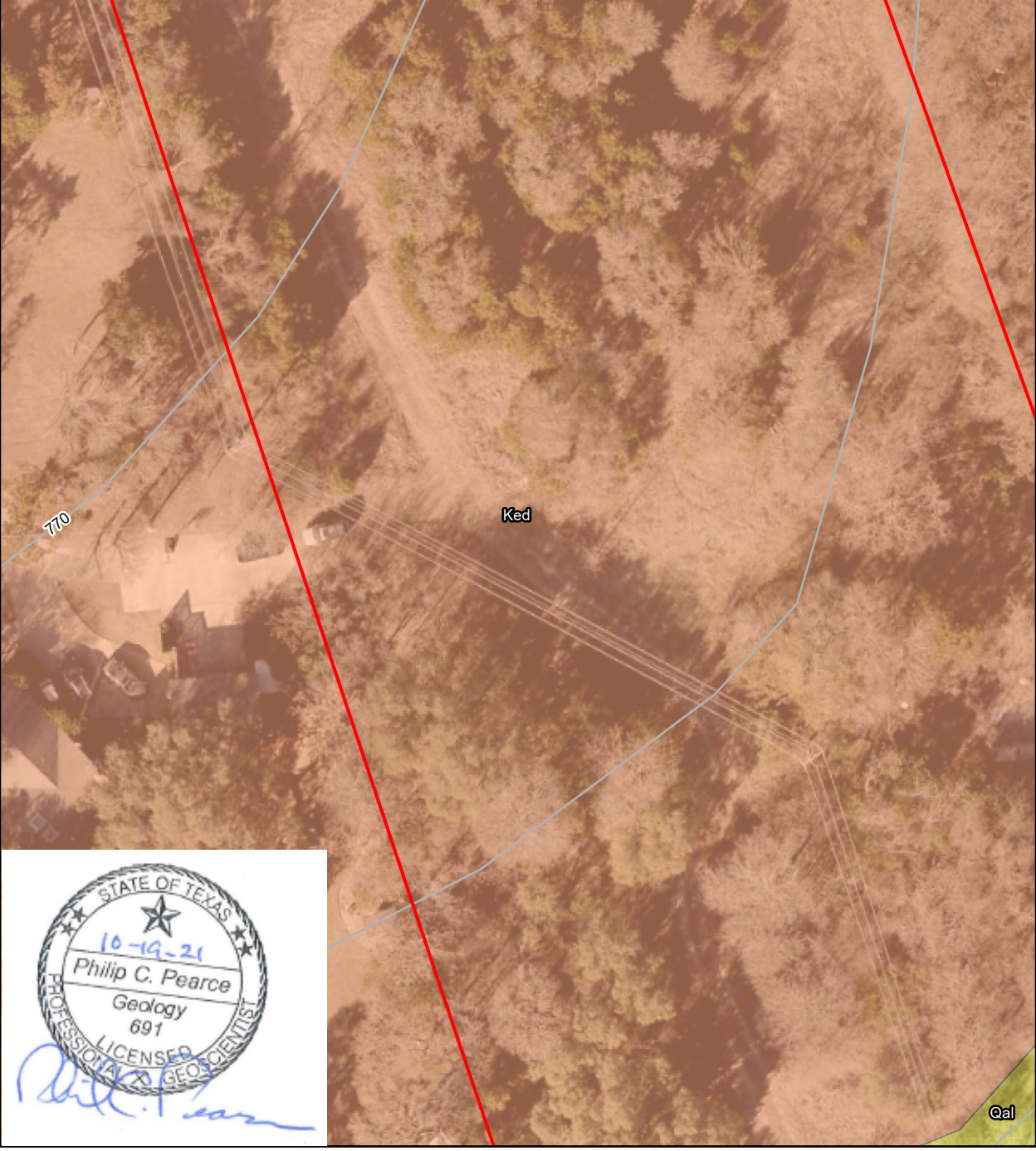

STATE OF TEXAS
10-19-21
Philip C. Pearce
Geology
691
LICENSED
PROFESSIONAL GEOSCIENTIST

SWCA®
ENVIRONMENTAL CONSULTANTS

WYOMING SPRINGS DRIVE SEGMENT 1

GEOLOGIC MAP
WILLIAMSON COUNTY, TEXAS

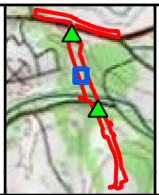

Project Area
Contour Line
Geologic Unit
Ked
Qal

1 inch = 50 feet
1:600
Created By: ccarpenter
Project Number: 55828
Date: 10/14/2021



N

0 25 50 Feet
0 5 10 Meters

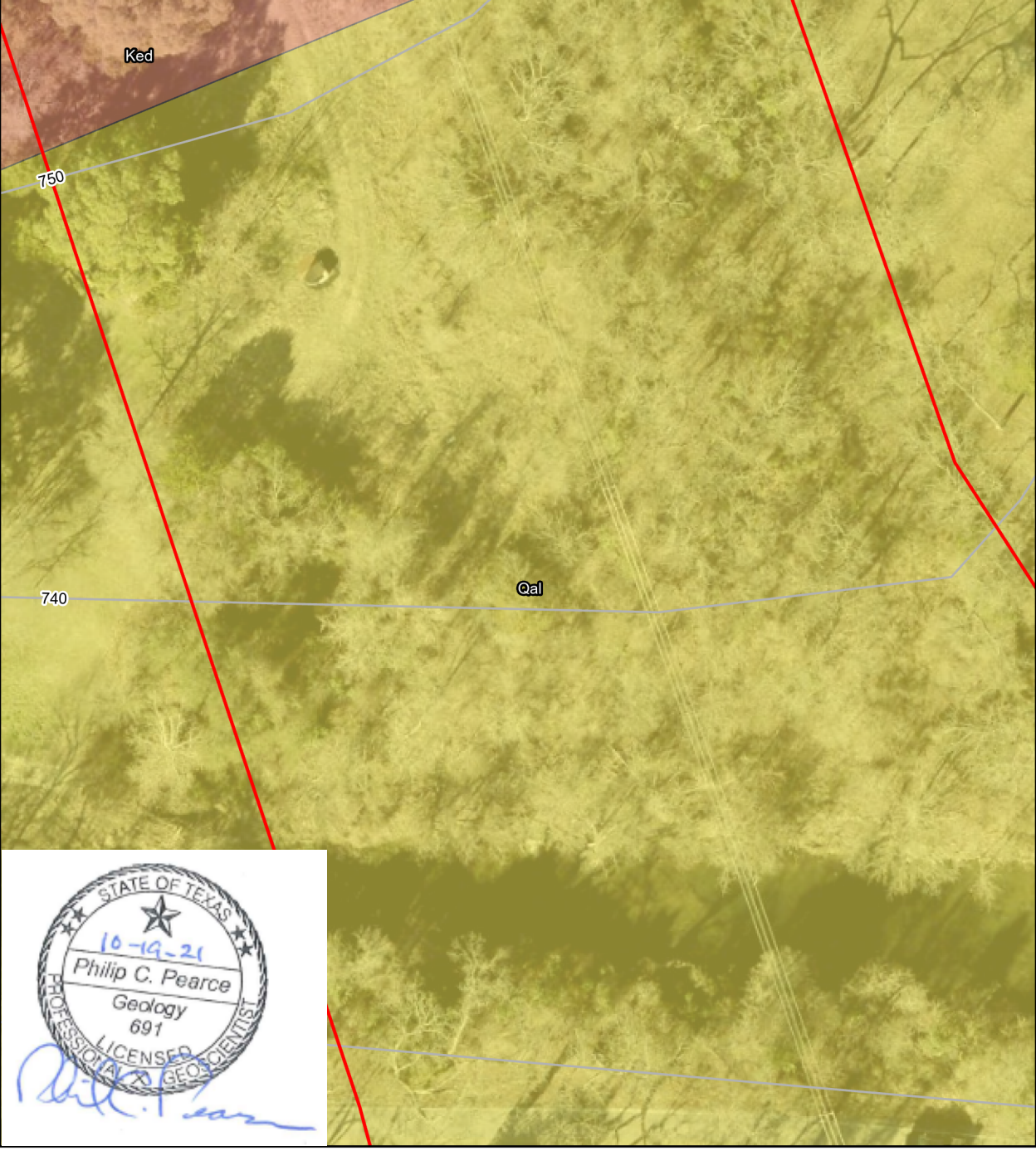

STATE OF TEXAS
10-19-21
Philip C. Pearce
Geology
691
LICENSED
PROFESSIONAL GEOSCIENTIST

SWCA®
ENVIRONMENTAL CONSULTANTS

WYOMING SPRINGS DRIVE SEGMENT 1

GEOLOGIC MAP
WILLIAMSON COUNTY, TEXAS

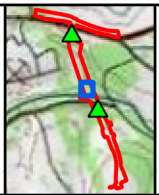

Project Area
Contour Line
Geologic Unit
Ked
Qal

1 inch = 50 feet
1:600
Created By: ccarpenter
Project Number: 55828
Date: 10/14/2021



N

0 25 50 Feet
0 5 10 Meters

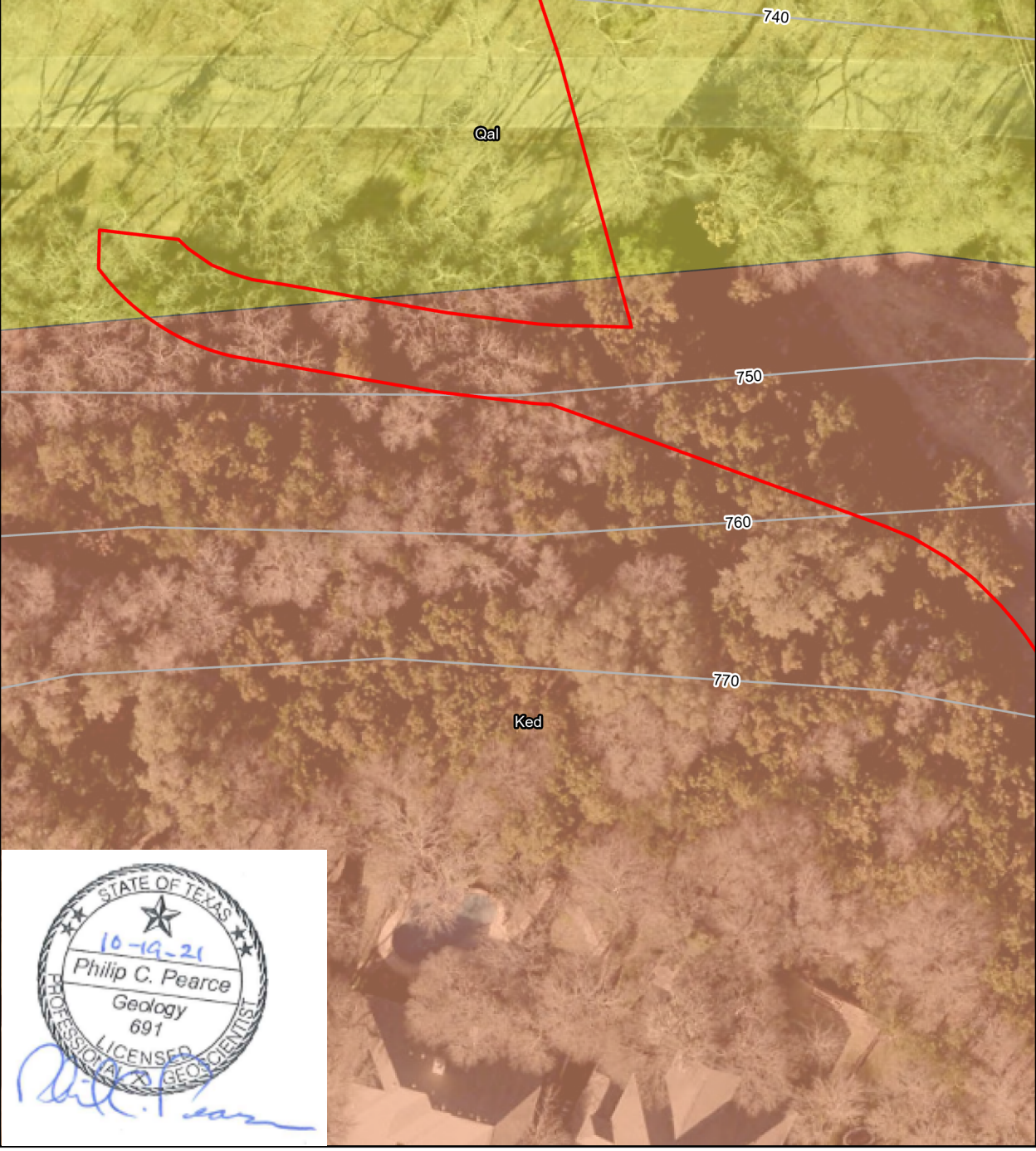

STATE OF TEXAS
10-19-21
Philip C. Pearce
Geology
691
LICENSED PROFESSIONAL GEOSCIENTIST

SWCA®
ENVIRONMENTAL CONSULTANTS

WYOMING SPRINGS DRIVE SEGMENT 1

GEOLOGIC MAP
WILLIAMSON COUNTY, TEXAS

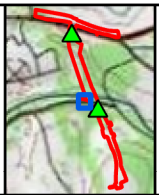

Project Area
Contour Line
Geologic Unit
Ked
Qal

1 inch = 50 feet
1:600
Created By: ccarpenter
Project Number: 55828
Date: 10/14/2021



N

0 25 50 Feet
0 5 10 Meters

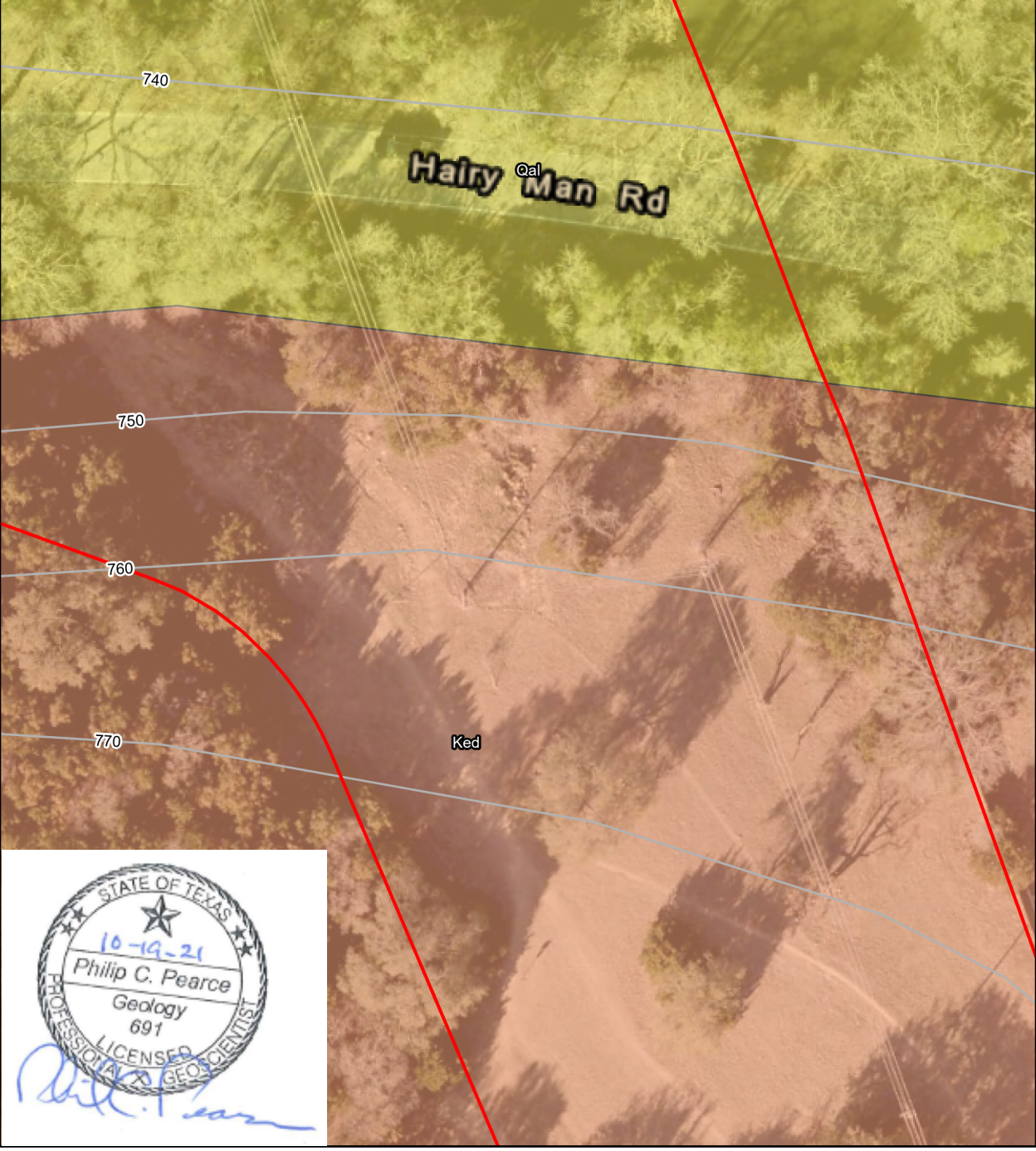

STATE OF TEXAS
10-19-21
Philip C. Pearce
Geology
691
LICENSED
PROFESSIONAL GEOSCIENTIST

SWCA®
ENVIRONMENTAL CONSULTANTS

WYOMING SPRINGS DRIVE SEGMENT 1

GEOLOGIC MAP
WILLIAMSON COUNTY, TEXAS

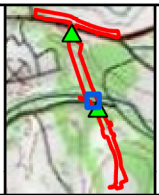

Project Area
Contour Line
Geologic Unit
Ked
Qal

1 inch = 50 feet
1:600
Created By: ccarpenter
Project Number: 55828
Date: 10/14/2021



N

0 25 50 Feet
0 5 10 Meters



STATE OF TEXAS
10-19-21
Philip C. Pearce
Geology
691
LICENSED
PROFESSIONAL GEOSCIENTIST

SWCA®
ENVIRONMENTAL CONSULTANTS

WYOMING SPRINGS DRIVE SEGMENT 1

GEOLOGIC MAP
WILLIAMSON COUNTY, TEXAS

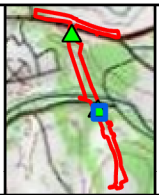

Project Area
Feature
Contour Line

Geologic Unit
Ked

1 inch = 50 feet
1:600
Created By: ccarpenter
Project Number: 55828
Date: 10/14/2021



N

0 25 50 Feet
0 5 10 Meters



STATE OF TEXAS
10-19-21
Philip C. Pearce
Geology
691
LICENSED
PROFESSIONAL GEOSCIENTIST

SWCA ENVIRONMENTAL CONSULTANTS

WYOMING SPRINGS DRIVE SEGMENT 1

GEOLOGIC MAP
WILLIAMSON COUNTY, TEXAS

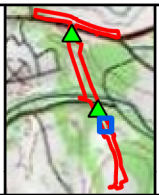

Project Area
Contour Line
Geologic Unit
Ked

1 inch = 50 feet
1:600
Created By: ccarpenter
Project Number: 55828
Date: 10/14/2021

0 25 50 Feet
0 5 10 Meters

N

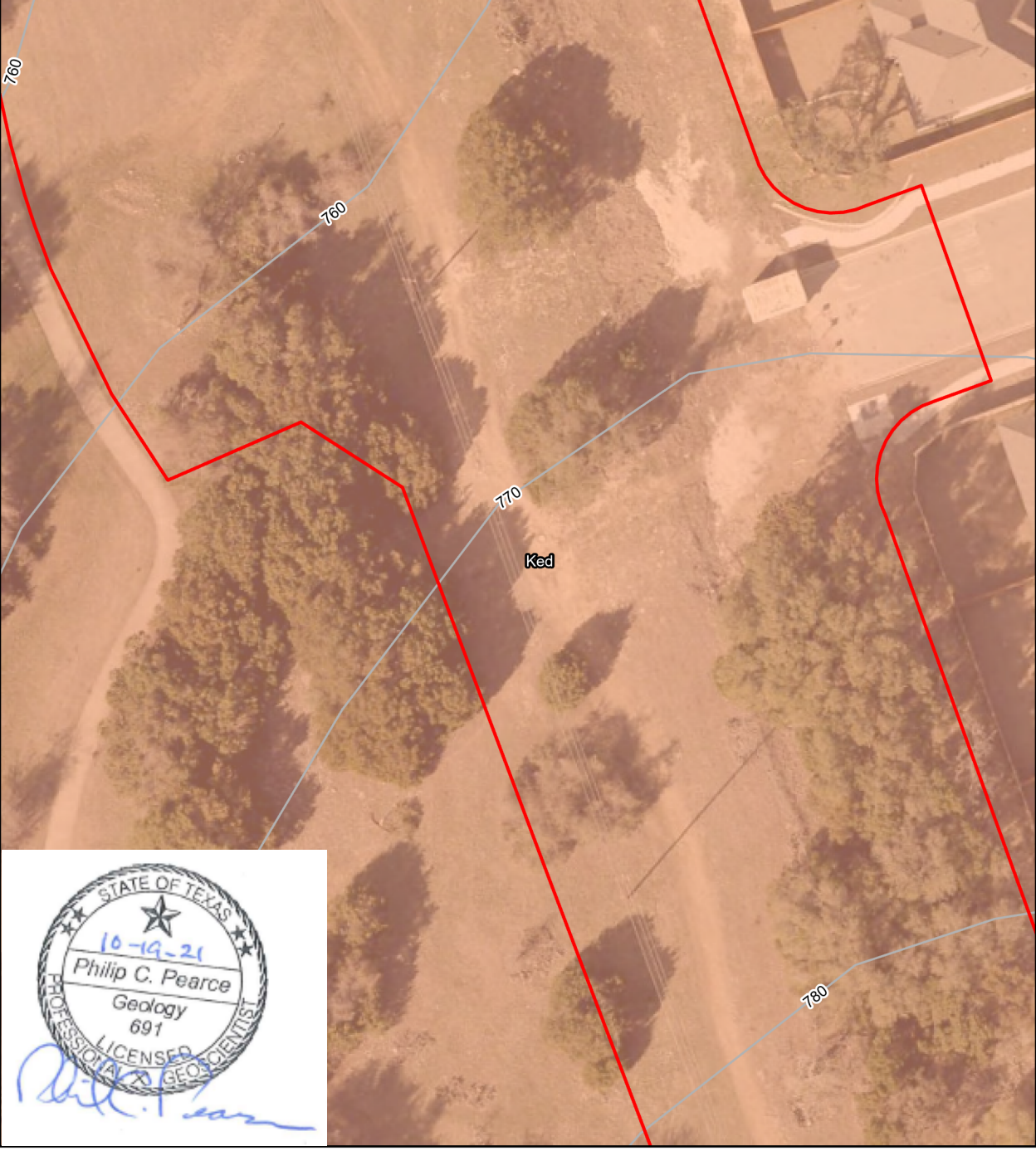

STATE OF TEXAS
10-19-21
Philip C. Pearce
Geology
691
LICENSED
PROFESSIONAL GEOSCIENTIST

SWCA ENVIRONMENTAL CONSULTANTS

WYOMING SPRINGS DRIVE SEGMENT 1

GEOLOGIC MAP
WILLIAMSON COUNTY, TEXAS

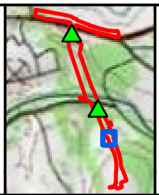

Project Area
Contour Line
Geologic Unit
Ked

1 inch = 50 feet
1:600
Created By: ccarpenter
Project Number: 55828
Date: 10/14/2021



N

0 25 50 Feet
0 5 10 Meters



STATE OF TEXAS
10-19-21
Philip C. Pearce
Geology
691
LICENSED
PROFESSIONAL GEOSCIENTIST

SWCA®
ENVIRONMENTAL CONSULTANTS

WYOMING SPRINGS DRIVE SEGMENT 1

GEOLOGIC MAP
WILLIAMSON COUNTY, TEXAS

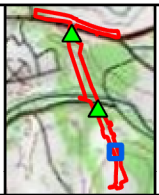

Project Area
Contour Line
Geologic Unit
Ked

1 inch = 50 feet
1:600
Created By: ccarpenter
Project Number: 55828
Date: 10/14/2021



N

0 25 50 Feet
0 5 10 Meters



STATE OF TEXAS
10-19-21
Philip C. Pearce
Geology
691
LICENSED
PROFESSIONAL GEOSCIENTIST

SWCA®
ENVIRONMENTAL CONSULTANTS

WYOMING SPRINGS DRIVE SEGMENT 1

GEOLOGIC MAP
WILLIAMSON COUNTY, TEXAS

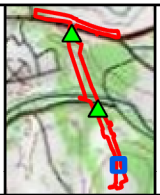

Project Area
Contour Line
Geologic Unit
Ked

1 inch = 50 feet
1:600
Created By: ccarpenter
Project Number: 55828
Date: 10/14/2021



N

0 25 50 Feet
0 5 10 Meters



STATE OF TEXAS
10-19-21
Philip C. Pearce
Geology
691
LICENSED PROFESSIONAL GEOSCIENTIST

SWCA ENVIRONMENTAL CONSULTANTS

WYOMING SPRINGS DRIVE SEGMENT 1

GEOLOGIC MAP
WILLIAMSON COUNTY, TEXAS

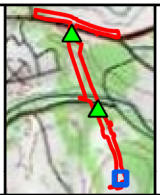

Project Area
Contour Line
Geologic Unit
Ked

1 inch = 50 feet
1:600
Created By: ccarpenter
Project Number: 55828
Date: 10/14/2021



N

0 25 50 Feet
0 5 10 Meters

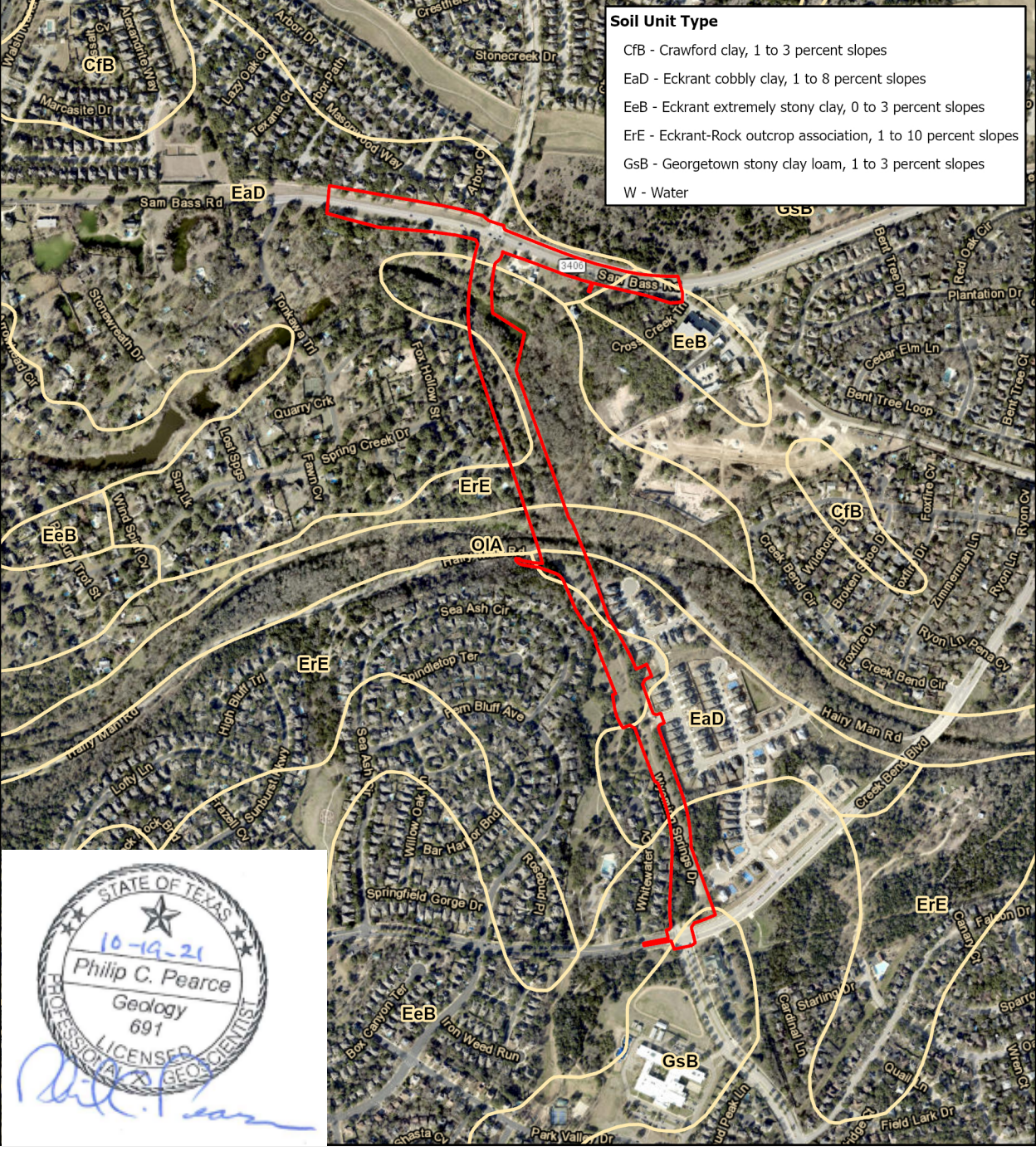

Path: N:\Projects\55000\55828 Wyoming Springs and Ronald Reagan\MXD_APRX\Wyoming Springs and Ronald Reagan 55828.aprx

SWCA ENVIRONMENTAL CONSULTANTS

WYOMING SPRINGS DRIVE SEGMENT 1

SOILS MAP
WILLIAMSON COUNTY, TEXAS

Project Area
Soil Unit

1:12,000

Created By: ccarpenter
Project Number: 55828
Date: 10/14/2021

0 250 500 Feet
0 100 200 Meters

N

ATTACHMENT E

Photographic Log



Photograph 1. Photograph shows Feature F-1.



Photograph 2. Photograph of Feature F-2.



Photograph 3. Representative photograph of site.



Photograph 4. Photograph of dense vegetation near Brushy Creek.

Organized Sewage Collection System Application

Texas Commission on Environmental Quality

For Regulated Activities on the Edwards Aquifer Recharge Zone and Relating to 30 TAC §213.5(c), Effective June 1, 1999

To ensure that the application is administratively complete, confirm that all fields in the form are complete, verify that all requested information is provided, consistently reference the same site and contact person in all forms in the application, and ensure forms are signed by the appropriate party.

Note: Including all the information requested in the form and attachments contributes to more streamlined technical reviews.

Regulated Entity Name: Wyoming Springs Extension- Segment 1

1. ☒ **Attachment A – SCS Engineering Design Report**. This Engineering Design Report is provided to fulfill the requirements of 30 TAC Chapter 217, including 217.10 of Subchapter A, §§217.51 – 217.70 of Subchapter C, and Subchapter D as applicable, and is required to be submitted with this SCS Application Form.

Customer Information

2. The entity and contact person responsible for providing the required engineering certification of testing for this sewage collection system upon completion (including private service connections) and every five years thereafter to the appropriate TCEQ region office pursuant to 30 TAC §213.5(c) is:

   Contact Person: Dawn Scheel, P.E.
   Entity: City of Round Rock- Transportation
   Mailing Address: 3400 Sunrise Road
   City, State: Round Rock, TX Zip: 78665
   Telephone: 512-218-6603 Fax: _____
   Email Address: dscheel@roundrocktexas.gov
   The appropriate regional office must be informed of any changes in this information within 30 days of the change.

3. The engineer responsible for the design of this sewage collection system is:

   Contact Person: Noah S. Shaffer, P.E.
   Texas Licensed Professional Engineer's Number: 107722
   Entity: Halff Associates, Inc.
   Mailing Address: 13620 Briarwick Dr, Building C Suite 100
   City, State: Austin, TX Zip: 78729
   Telephone:512-942-6222 Fax:_____
   Email Address:nshaffer@halff.com

Project Information

4. Anticipated type of development to be served (estimated future population to be served, plus adequate allowance for institutional and commercial flows):

   ☐ Residential: Number of single-family lots: _____
   ☐ Multi-family: Number of residential units: _____
   ☐ Commercial
   ☐ Industrial
   ☐ Off-site system (not associated with any development)
   ☒ Other: Roadway and SUP

5. The character and volume of wastewater is shown below:

   N/A % Domestic — N/A gallons/day
   N/A % Industrial — N/A gallons/day
   N/A % Commingled — N/A gallons/day

   Total gallons/day: N/A

6. Existing and anticipated infiltration/inflow is N/A gallons/day. This will be addressed by: N/A.

7. A Water Pollution Abatement Plan (WPAP) is required for construction of any associated commercial, industrial or residential project located on the Recharge Zone.

   ☐ The WPAP application for this development was approved by letter dated _____. A copy of the approval letter is attached.
   ☒ The WPAP application for this development was submitted to the TCEQ on 8/14/2023, but has not been approved.
   ☐ A WPAP application is required for an associated project, but it has not been submitted.
   ☐ There is no associated project requiring a WPAP application.

8. Pipe description:

Table 1 - Pipe Description

Pipe Diameter(Inches)	*Linear Feet (1)*	*Pipe Material (2)*	*Specifications (3)*
N/A	N/A	N/A	N/A

Total Linear Feet: N/A

(1) Linear feet - Include stub-outs and double service connections. Do not include private service laterals.
(2) Pipe Material - If PVC, state SDR value.
(3) Specifications - ASTM / ANSI / AWWA specification and class numbers should be included.

9. The sewage collection system will convey the wastewater to the East Brushy Creek Regional Wastewater Treatment Plant (name) Treatment Plant. The treatment facility is:

   ☒ Existing
   ☐ Proposed

10. All components of this sewage collection system will comply with:

   ☒ The City of Round Rock standard specifications.
   ☐ Other. Specifications are attached.

11. ☒ No force main(s) and/or lift station(s) are associated with this sewage collection system.

   ☐ A force main(s) and/or lift station(s) is associated with this sewage collection system and the **Lift Station/Force Main System Application** form (TCEQ-0624) is included with this application.

Alignment

12. ☒ There are no deviations from uniform grade in this sewage collection system without manholes and with open cut construction.

13. ☒ There are no deviations from straight alignment in this sewage collection system without manholes.

   ☐ **Attachment B - Justification and Calculations for Deviation in Straight Alignment without Manholes**. A justification for deviations from straight alignment in this sewage collection system without manholes with documentation from pipe manufacturer allowing pipe curvature is attached.

   ☐ For curved sewer lines, all curved sewer line notes (TCEQ-0596) are included on the construction plans for the wastewater collection system.

Manholes and Cleanouts

14. ☒ Manholes or clean-outs exist at the end of each sewer line(s). These locations are listed below: (Please attach additional sheet if necessary)

Table 2 - Manholes and Cleanouts

Line	*Shown on Sheet*	*Station*	*Manhole or Clean-out?*
EX. 24" FERN BLUFF SUD	450 Of 594	1+00.00	Manhole
EX. 24" FERN BLUFF SUD	450 Of 594	5+01.08	Manhole
EX. 24" WWL FERN BLUFF SUD	451 Of 594	1+51.05	Manhole
EX. 24" WWL FERN BLUFF SUD	451 Of 594	2+18.71	Manhole

Line	*Shown on Sheet*	*Station*	*Manhole or Clean-out?*
EX 24" WWL-A CITY OF ROUND ROCK	452 Of 594	3+34.56	Manhole
EX 24" WWL-A CITY OF ROUND ROCK	452 Of 594	4+68.78	Manhole
EX 24" WWL-A CITY OF ROUND ROCKA	453 Of 594	7+77.00	Manhole
	Of		
	Of		
	Of		

15. ☒ Manholes are installed at all Points of Curvature and Points of Termination of a sewer line.

16. ☒ The maximum spacing between manholes on this project for each pipe diameter is no greater than:

Pipe Diameter (inches)	**Max. Manhole Spacing (feet)**
6 - 15	500
16 - 30	800
36 - 48	1000
≥54	2000

☐ **Attachment C – Justification for Variance from Maximum Manhole Spacing**. The maximum spacing between manholes on this project (for each pipe diameter used) is greater than listed in the table above. A justification for any variance from the maximum spacing is attached, and must include a letter from the entity which will operate and maintain the system stating that it has the capability to maintain lines with manhole spacing greater than the allowed spacing.

17. ☐ All manholes will be monolithic, cast-in-place concrete.

☒ The use of pre-cast manholes is requested for this project. The manufacturer's specifications and construction drawings, showing the method of sealing the joints, are attached.

Site Plan Requirements

Items 18 - 25 must be included on the Site Plan.

18. ☒ The Site Plan must have a minimum scale of 1" = 400'.

Site Plan Scale: 1" = 40'.

19. ☒ The Site Plan must include the sewage collection system general layout, including manholes with station numbers, and sewer pipe stub outs (if any). Site plan must be

overlain by topographic contour lines, using a contour interval of not greater than ten feet and showing the area within both the five-year floodplain and the 100-year floodplain of any drainage way.

20. Lateral stub-outs:

☐ The location of all lateral stub-outs are shown and labeled.
☒ No lateral stub-outs will be installed during the construction of this sewer collection system.

21. Location of existing and proposed water lines:

☒ The entire water distribution system for this project is shown and labeled.
☐ If not shown on the Site Plan, a Utility Plan is provided showing the entire water and sewer systems.
☐ There will be no water lines associated with this project.

22. 100-year floodplain:

☐ After construction is complete, no part of this project will be in or cross a 100-year floodplain, either naturally occurring or manmade. (Do not include streets or concrete-lined channels constructed above of sewer lines.)
☒ After construction is complete, all sections located within the 100-year floodplain will have water-tight manholes. These locations are listed in the table below and are shown and labeled on the Site Plan. (Do not include streets or concrete-lined channels constructed above sewer lines.)

Table 3 - 100-Year Floodplain

Line	***Sheet***	***Station***
EX. 24" WWL FERN BLUFF SUD	451 of 594	1+83.00 to 2+52.06
	of	to
	of	to
	of	to

23. 5-year floodplain:

☒ After construction is complete, no part of this project will be in or cross a 5-year floodplain, either naturally occurring or man-made. (Do not include streets or concrete-lined channels constructed above sewer lines.)
☐ After construction is complete, all sections located within the 5-year floodplain will be encased in concrete or capped with concrete. These locations are listed in the table below and are shown and labeled on the Site Plan. (Do not include streets or concrete-lined channels constructed above sewer lines.)

Table 4 - 5-Year Floodplain

Line	***Sheet***	***Station***
N/A	N/A of N/A	N/A to N/A

Line	*Sheet*	*Station*
	of	to
	of	to
	of	to

24. ☒ Legal boundaries of the site are shown.

25. ☒ The ***final plans and technical specifications*** are submitted for the TCEQ's review. Each sheet of the construction plans and specifications are dated, signed, and sealed by the Texas Licensed Professional Engineer responsible for the design on each sheet.

Items 26 - 33 must be included on the Plan and Profile sheets.

26. ☒ All existing or proposed water line crossings and any parallel water lines within 9 feet of sewer lines are listed in the table below. These lines must have the type of pressure rated pipe to be installed shown on the plan and profile sheets. Any request for a variance from the required pressure rated piping at crossings must include a variance approval from 30 TAC Chapter 290.

☐ There will be no water line crossings.
☐ There will be no water lines within 9 feet of proposed sewer lines.

Table 5 - Water Line Crossings

Line	*Station or Closest Point*	*Crossing or Parallel*	*Horizontal Separation Distance*	*Vertical Separation Distance*
WL-A	STA 3+26.10	Crossing	N/A	2.5-ft

27. Vented Manholes:

☐ **No part** of this sewer line is within the 100-year floodplain and vented manholes are not required by 30 TAC Chapter 217.

☐ **A portion** of this sewer line is within the 100-year floodplain and vented manholes will be provided at less than 1500 foot intervals. These water-tight manholes are listed in the table below and labeled on the appropriate profile sheets.

☐ **A portion** of this sewer line is within the 100-year floodplain and an alternative means of venting shall be provided at less than 1500 feet intervals. A description of the alternative means is described on the following page.

☒ **A portion** of this sewer line is within the 100-year floodplain; however, there is no interval longer than 1500 feet located within. No vented manholes will be used.

Table 6 - Vented Manholes

Line	*Manhole*	*Station*	*Sheet*
N/A	N/A	N/A	N/A

28. Drop manholes:

☐ There are no drop manholes associated with this project.
☒ Sewer lines which enter new or existing manholes or "manhole structures" higher than 24 inches above the manhole invert are listed in the table below and labeled on the appropriate profile sheets. These lines meet the requirements of 30 TAC §217.55(l)(2)(H).

Table 7 - Drop Manholes

Line	*Manhole*	*Station*	*Sheet*
EX 24" WWL-A	EX MH	STA 7+77.00	453 of 594

29. Sewer line stub-outs (For proposed extensions):

☐ The placement and markings of all sewer line stub-outs are shown and labeled.
☒ No sewer line stub-outs are to be installed during the construction of this sewage collection system.

30. Lateral stub-outs (For proposed private service connections):

☐ The placement and markings of all lateral stub-outs are shown and labeled.
☒ No lateral stub-outs are to be installed during the construction of this sewage collection system.

31. Minimum flow velocity (From Appendix A)

☐ Assuming pipes are flowing full; all slopes are designed to produce flows equal to or greater than 2.0 feet per second for this system/line.

32. Maximum flow velocity/slopes (From Appendix A)

☒ Assuming pipes are flowing full, all slopes are designed to produce maximum flows of less than or equal to 10 feet per second for this system/line.

☐ **Attachment D – Calculations for Slopes for Flows Greater Than 10.0 Feet per Second.** Assuming pipes are flowing full, some slopes produce flows which are greater than 10 feet per second. These locations are listed in the table below. Calculations are attached.

Table 8 - Flows Greater Than 10 Feet per Second

Line	*Profile Sheet*	*Station to Station*	*FPS*	*% Slope*	*Erosion/Shock Protection*
N/A	N/A	N/A	N/A	N/A	N/A

33. Assuming pipes are flowing full, where flows are ≥ 10 feet per second, the provisions noted below have been made to protect against pipe displacement by erosion and/or shock under 30 TAC §217.53(l)(2)(B).

☐ Concrete encasement shown on appropriate Plan and Profile sheets for the locations listed in the table above.

☐ Steel-reinforced, anchored concrete baffles/retards placed every 50 feet shown on appropriate Plan and Profile sheets for the locations listed in the table above.

☒ N/A

Administrative Information

34. ☐ The final plans and technical specifications are submitted for TCEQ review. Each sheet of the construction plans and specifications are dated, signed, and sealed by the Texas Licensed Professional Engineer responsible for the design on each sheet.

35. ☒ Standard details are shown on the detail sheets, which are dated, signed, and sealed by the Texas Licensed Professional Engineer, as listed in the table below:

Table 9 - Standard Details

Standard Details	*Shown on Sheet*
Lateral stub-out marking **[Required]**	N/A of
Manhole, showing inverts comply with 30 TAC §217.55(l)(2) **[Required]**	450-454 of 594
Alternate method of joining lateral to existing SCS line for potential future connections **[Required]**	N/A of
Typical trench cross-sections **[Required]**	448 of 594
Bolted manholes **[Required]**	451 of 594
Sewer Service lateral standard details **[Required]**	N/A of
Clean-out at end of line **[Required, if used]**	N/A of

Standard Details	*Shown on Sheet*
Baffles or concrete encasement for shock/erosion protection **[Required, if flow velocity of any section of pipe >10 fps]**	N/A of
Detail showing Wastewater Line/Water Line Crossing **[Required, if crossings are proposed]**	446 of 594
Mandrel detail or specifications showing compliance with 30 TAC §217.57(b) and (c) **[Required, if Flexible Pipe is used]**	N/A of
Drop manholes **[Required, if a pipe entering a manhole is more than 24 inches above manhole invert]**	453 of 594

36. ☒ All organized sewage collection system general construction notes (TCEQ-0596) are included on the construction plans for this sewage collection system.

37. ☐ All proposed sewer lines will be sufficiently surveyed/staked to allow an assessment prior to TCEQ executive director approval. If the alignments of the proposed sewer lines are not walkable on that date, the application will be deemed incomplete and returned.

    ☒ Survey staking was completed on this date: 02/07/2020.

38. ☒ Submit one (1) original and one (1) copy of the application, plus additional copies as needed for each affected incorporated city, groundwater conservation district, and county in which the project will be located. The TCEQ will distribute the additional copies to these jurisdictions. The copies must be submitted to the appropriate regional office.

39. ☒ Any modification of this SCS application will require TCEQ approval, prior to construction, and may require submission of a revised application, with appropriate fees.

Signature

To the best of my knowledge, the responses to this form accurately reflect all information requested concerning the proposed regulated activities and methods to protect the Edwards Aquifer. This **Organized Sewage Collection System Application** is hereby submitted for TCEQ review and executive director approval. The system was designed in accordance with the requirements of 30 TAC §213.5(c) and 30 TAC §217 and prepared by:

Print Name of Licensed Professional Engineer: Noah S. Shaffer, P.E.

Date: 7/27/2023

Place engineer's seal here:



Signature of Licensed Professional Engineer:

Appendix A-Flow Velocity Table

Flow Velocity (Flowing Full) All gravity sewer lines on the Edwards Aquifer Recharge Zone shall be designed and constructed with hydraulic slopes sufficient to give a velocity when flowing full of not less than 2.0 feet per second, and not greater than 10 feet per second. The grades shown in the following table are based on Manning's formula and an n factor of 0.013 and shall be the minimum and maximum acceptable slopes unless provisions are made otherwise.

Table 10 - Slope Velocity

Pipe Diameter(Inches)	*% Slope required for minimum flow velocity of 2.0 fps*	*% Slope which produces flow velocity of 10.0 fps*
6	0.50	12.35
8	0.33	8.40
10	0.25	6.23
12	0.20	4.88
15	0.15	3.62
18	0.11	2.83
21	0.09	2.30
24	0.08	1.93
27	0.06	1.65
30	0.055	1.43
33	0.05	1.26
36	0.045	1.12
39	0.04	1.01
>39	*	*

**For lines larger than 39 inches in diameter, the slope may be determined by Manning's formula (as shown below) to maintain a minimum velocity greater than 2.0 feet per second when flowing full and a maximum velocity less than 10 feet per second when flowing full.*

$$v = \frac{1.49}{n} \times R_h^{0.67} \times \sqrt{S}$$

Figure 1 - Manning's Formula

Where:

v = velocity (ft/sec)
n = Manning's roughness coefficient (0.013)
Rh = hydraulic radius (ft)
S = slope (ft/ft)

Attachment A

SCS Engineering Design Report- 0582

TAC.30.1.217.A. §217.10 (f)-1

Location:

The proposed Wyoming Springs Drive Extension, located in Round Rock, Williamson County, is entirely within the Edwards Aquifer Recharge Zone beginning at the intersection of Brightwater Blvd/Creek Bend Blvd and ending at the intersection of Sam Bass Road and Wyoming Springs. Additionally, a portion of the project runs along Sam Bass Rd beginning east of Tonkawa Trail and ending west of Crosscreek Trail. There is no proposed wastewater collection system through the project limits. The project proposes two bridge crossings at Brushy Creek and Dry Fork Creek, so the proposed grade along the existing wastewater system is higher than existing manhole rim elevations. This project proposes to raise manhole rims to proposed grade along Wyoming Springs Dr. The project also proposed to relocate a portion of the existing 30-IN waterline, where there would be grade conflicts otherwise. (See Attachment 1A for proposed project location.)

TAC.30.1.217.A. §217.10 (f)-2

Existing Conditions:

The project site along Wyoming Springs Dr. is an open, grassy meadow with many trees throughout. The undeveloped and undisturbed property is covered with wildflowers and tall grasses, and has two creek crossings and crosses Hairy Man Rd. The project site along Sam Bass Road, is a developed asphalt-paved road with paved driveways and drainage ditches along either side of the existing road.

Two non-karst closed depressions were identified in the Geological Assessment performed for the site. The overall potential for rapid infiltration of runoff into the surface within the site has been deemed low due to a lack of exposed bedrock the non-karst origin of these features.

Proposed Conditions:

The proposed development includes approximately 0.86 miles of two-lane divided roadway with a 6-foot-wide sidewalk along the east side of the roadway and 10-foot-wide shared use path. The proposed roadway will have two sets of twin bridges crossing over Hairy Man Rd and Brushy Creek and Dry Fork Creek.

Site impervious cover will consist of the roadway and accompanying sidewalk totaling 9.52 acres of asphalt and concrete.

TAC.30.1.217.A. §217.10 (f)-3

Design Flow Determination:

There are no calculations of design flow as part of this project, as there are no proposed changes to any wastewater pipes. Changes to wastewater system facilities only include raising manhole rims to proposed grade.

TAC.30.1.217.A. §217.10 (f)-4

Pipe determination:

There were no pipe wastewater pipe determinations as part of this project; there are no propose changes to wastewater pipe, and no proposed flow increases to wastewater systems within project limits.

TAC.30.1.217.A. §217.10 (f)-5

Calculations:

There are no proposed changes to the slopes and velocities of the existing wastewater system. It is assumed that all existing wastewater collection systems within the project limits have been designed to have slopes sufficient to allow a velocity when flowing full of not less than 2.0 feet per second.

TAC.30.1.217.A. §217.10 (f)-6

Existing System impact:

The existing wastewater system which runs southeast toward the Brushy Creek East Regional Treatment Plant will be sufficient and have no adverse effect.

TAC.30.1.217.A. §217.10 (f)-7

Inflow & Infiltration:

This project does not propose any additional design flow to the existing system. There will be no proposed inflow and infiltration flow rate monitoring system installed nor will there be any inflow and infiltration abatement measures taken.

TAC.30.1.217.A. §217.10 (f)-8

Trunk & Interceptor:

There are no proposed wastewater trunkline or interceptors in this project.

TAC.30.1.217.A. §217.10 (f)-9

Treatment Facility:

The Brushy Creek East Regional Wastewater Treatment Plant in Round Rock, Texas will have the capacity and capabilities of treating the proposed wastewater flow.

TAC.30.1.217.A. §217.10 (f)-10

Structural Analysis:

Due to the Organized Sewage Collection System meeting all the necessary requirements in TAC.30.1.217.C. §217.53.k4, a structural analysis was deemed unnecessary. No odor causing conditions are anticipated. All pipe design is compliant with the requirements outlined in this chapter.

TAC.30.1.217.A. §217.10 (f)-11

Future Expansion:

It is assumed that that this project will be fully built out with this project and there is no future expansion anticipated as part of this project.

TAC.30.1.217.A. §217.10 (f)-12

Lift Station Calculations:

Not applicable.

Temporary Stormwater Section

Texas Commission on Environmental Quality

for Regulated Activities on the Edwards Aquifer Recharge Zone and Relating to 30 TAC §213.5(b)(4)(A), (B), (D)(I) and (G); Effective June 1, 1999

To ensure that the application is administratively complete, confirm that all fields in the form are complete, verify that all requested information is provided, consistently reference the same site and contact person in all forms in the application, and ensure forms are signed by the appropriate party.

Note: Including all the information requested in the form and attachments contributes to more streamlined technical reviews.

Signature

To the best of my knowledge, the responses to this form accurately reflect all information requested concerning the proposed regulated activities and methods to protect the Edwards Aquifer. This **Temporary Stormwater Section** is hereby submitted for TCEQ review and executive director approval. The application was prepared by:

Print Name of Customer/Agent: Jeffrey Nagy, P.E.

Date: 8/14/2023

Signature of Customer/Agent:

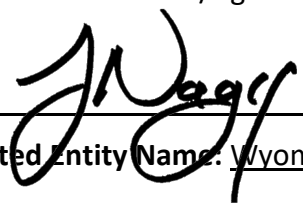

Regulated Entity Name: Wyoming Springs Extension - Segment 1

Project Information

Potential Sources of Contamination

Examples: Fuel storage and use, chemical storage and use, use of asphaltic products, construction vehicles tracking onto public roads, and existing solid waste.

1. Fuels for construction equipment and hazardous substances which will be used during construction:

   ☐ The following fuels and/or hazardous substances will be stored on the site: _____

   These fuels and/or hazardous substances will be stored in:

   ☐ Aboveground storage tanks with a cumulative storage capacity of less than 250 gallons will be stored on the site for less than one (1) year.

☐ Aboveground storage tanks with a cumulative storage capacity between 250 gallons and 499 gallons will be stored on the site for less than one (1) year.

☐ Aboveground storage tanks with a cumulative storage capacity of 500 gallons or more will be stored on the site. An Aboveground Storage Tank Facility Plan application must be submitted to the appropriate regional office of the TCEQ prior to moving the tanks onto the project.

☒ Fuels and hazardous substances will not be stored on the site.

2. ☒ **Attachment A - Spill Response Actions**. A site specific description of the measures to be taken to contain any spill of hydrocarbons or hazardous substances is attached.

3. ☐ Temporary aboveground storage tank systems of 250 gallons or more cumulative storage capacity must be located a minimum horizontal distance of 150 feet from any domestic, industrial, irrigation, or public water supply well, or other sensitive feature.

4. ☒ **Attachment B - Potential Sources of Contamination**. A description of any activities or processes which may be a potential source of contamination affecting surface water quality is attached.

Sequence of Construction

5. ☒ **Attachment C - Sequence of Major Activities**. A description of the sequence of major activities which will disturb soils for major portions of the site (grubbing, excavation, grading, utilities, and infrastructure installation) is attached.

☒ For each activity described, an estimate (in acres) of the total area of the site to be disturbed by each activity is given.

☒ For each activity described, include a description of appropriate temporary control measures and the general timing (or sequence) during the construction process that the measures will be implemented.

6. ☒ Name the receiving water(s) at or near the site which will be disturbed or which will receive discharges from disturbed areas of the project: Brushy Creek & Dry Fork Creek

Temporary Best Management Practices (TBMPs)

Erosion control examples: tree protection, interceptor swales, level spreaders, outlet stabilization, blankets or matting, mulch, and sod. Sediment control examples: stabilized construction exit, silt fence, filter dikes, rock berms, buffer strips, sediment traps, and sediment basins. Please refer to the Technical Guidance Manual for guidelines and specifications. All structural BMPs must be shown on the site plan.

7. ☒ **Attachment D – Temporary Best Management Practices and Measures**. TBMPs and measures will prevent pollution of surface water, groundwater, and stormwater. The construction-phase BMPs for erosion and sediment controls have been designed to retain sediment on site to the extent practicable. The following information is attached:

☒ A description of how BMPs and measures will prevent pollution of surface water, groundwater or stormwater that originates upgradient from the site and flows across the site.

☒ A description of how BMPs and measures will prevent pollution of surface water or groundwater that originates on-site or flows off site, including pollution caused by contaminated stormwater runoff from the site.

☒ A description of how BMPs and measures will prevent pollutants from entering surface streams, sensitive features, or the aquifer.

☒ A description of how, to the maximum extent practicable, BMPs and measures will maintain flow to naturally-occurring sensitive features identified in either the geologic assessment, TCEQ inspections, or during excavation, blasting, or construction.

8. ☒ The temporary sealing of a naturally-occurring sensitive feature which accepts recharge to the Edwards Aquifer as a temporary pollution abatement measure during active construction should be avoided.

☐ **Attachment E - Request to Temporarily Seal a Feature**. A request to temporarily seal a feature is attached. The request includes justification as to why no reasonable and practicable alternative exists for each feature.

☒ There will be no temporary sealing of naturally-occurring sensitive features on the site.

9. ☒ **Attachment F - Structural Practices**. A description of the structural practices that will be used to divert flows away from exposed soils, to store flows, or to otherwise limit runoff discharge of pollutants from exposed areas of the site is attached. Placement of structural practices in floodplains has been avoided.

10. ☒ **Attachment G - Drainage Area Map**. A drainage area map supporting the following requirements is attached:

☐ For areas that will have more than 10 acres within a common drainage area disturbed at one time, a sediment basin will be provided.

☐ For areas that will have more than 10 acres within a common drainage area disturbed at one time, a smaller sediment basin and/or sediment trap(s) will be used.

☐ For areas that will have more than 10 acres within a common drainage area disturbed at one time, a sediment basin or other equivalent controls are not attainable, but other TBMPs and measures will be used in combination to protect down slope and side slope boundaries of the construction area.

☐ There are no areas greater than 10 acres within a common drainage area that will be disturbed at one time. A smaller sediment basin and/or sediment trap(s) will be used in combination with other erosion and sediment controls within each disturbed drainage area.

☒ There are no areas greater than 10 acres within a common drainage area that will be disturbed at one time. Erosion and sediment controls other than sediment basins or sediment traps within each disturbed drainage area will be used.

11. ☐ **Attachment H - Temporary Sediment Pond(s) Plans and Calculations**. Temporary sediment pond or basin construction plans and design calculations for a proposed temporary BMP or measure have been prepared by or under the direct supervision of a Texas Licensed Professional Engineer. All construction plans and design information must be signed, sealed, and dated by the Texas Licensed Professional Engineer. Construction plans for the proposed temporary BMPs and measures are attached.

☒ N/A

12. ☒ **Attachment I - Inspection and Maintenance for BMPs.** A plan for the inspection of each temporary BMP(s) and measure(s) and for their timely maintenance, repairs, and, if necessary, retrofit is attached. A description of the documentation procedures, recordkeeping practices, and inspection frequency are included in the plan and are specific to the site and/or BMP.

13. ☒ All control measures must be properly selected, installed, and maintained in accordance with the manufacturer's specifications and good engineering practices. If periodic inspections by the applicant or the executive director, or other information indicate a control has been used inappropriately, or incorrectly, the applicant must replace or modify the control for site situations.

14. ☒ If sediment escapes the construction site, off-site accumulations of sediment must be removed at a frequency sufficient to minimize offsite impacts to water quality (e.g., fugitive sediment in street being washed into surface streams or sensitive features by the next rain).

15. ☒ Sediment must be removed from sediment traps or sedimentation ponds not later than when design capacity has been reduced by 50%. A permanent stake will be provided that can indicate when the sediment occupies 50% of the basin volume.

16. ☒ Litter, construction debris, and construction chemicals exposed to stormwater shall be prevented from becoming a pollutant source for stormwater discharges (e.g., screening outfalls, picked up daily).

Soil Stabilization Practices

Examples: establishment of temporary vegetation, establishment of permanent vegetation, mulching, geotextiles, sod stabilization, vegetative buffer strips, protection of trees, or preservation of mature vegetation.

17. ☒ **Attachment J - Schedule of Interim and Permanent Soil Stabilization Practices**. A schedule of the interim and permanent soil stabilization practices for the site is attached.

18. ☒ Records must be kept at the site of the dates when major grading activities occur, the dates when construction activities temporarily or permanently cease on a portion of the site, and the dates when stabilization measures are initiated.

19. ☒ Stabilization practices must be initiated as soon as practicable where construction activities have temporarily or permanently ceased.

Administrative Information

20. ☒ All structural controls will be inspected and maintained according to the submitted and approved operation and maintenance plan for the project.

21. ☒ If any geologic or manmade features, such as caves, faults, sinkholes, etc., are discovered, all regulated activities near the feature will be immediately suspended. The appropriate TCEQ Regional Office shall be immediately notified. Regulated activities must cease and not continue until the TCEQ has reviewed and approved the methods proposed to protect the aquifer from any adverse impacts.

22. ☒ Silt fences, diversion berms, and other temporary erosion and sediment controls will be constructed and maintained as appropriate to prevent pollutants from entering sensitive features discovered during construction.

Attachment A:
Spill Response Actions

No spills of hydrocarbons or hazardous substances are expected. However, in the event such an incident does occur, the contractor should carefully follow the following TCEQ guidelines:

General Measures

(1) To the extent that work can be accomplished safely, spills of oil, petroleum products, substances listed under 40 CFR parts 110, 117, and 302, and sanitary and septic wastes should be contained and cleaned up immediately.
(2) Store hazardous materials and wastes in covered containers and protect from vandalism.
(3) Place a stockpile of spill cleanup materials where it will be readily accessible.
(4) Train employees in spill prevention and cleanup.
(5) Designate responsible individuals to oversee and enforce control measures.
(6) Spills should be covered and protected from stormwater run on during rainfall to the extent that doesn't compromise cleanup activities.
(7) Do not bury or wash spills with water.
(8) Store and dispose of used clean up materials, contaminated materials, and recovered spill material that is no longer suitable for the intended purpose in conformance with the provisions in applicable BMPs.
(9) Do not allow water used for cleaning and decontamination to enter storm drains or watercourses. Collect and dispose of contaminated water in accordance with applicable regulations.
(10) Contain water overflow or minor water spillage and do not allow it to discharge into drainage facilities or watercourses.
(11) Place Material Safety Data Sheets (MSDS), as well as proper storage, cleanup, and spill reporting instructions for hazardous materials stored or used in the project site in an open, conspicuous, and accessible location.
(12) Keep waste storage areas clean, well-organized, and equipped with ample cleanup supplies as appropriate for the materials being stored. Perimeter controls, containment structures, covers, and liners should be repaired or replaced as needed to maintain proper function.

Cleanup

(1) Clean up leaks and spills immediately.
(2) Use a rag for small spills on paved surfaces, a damp mop for general cleanup, and absorbent material for larger spills. If the spilled material is hazardous, then the used cleanup materials are also hazardous and must be disposed of as hazardous waste.
(3) Never hose down or bury dry material spills. Clean up as much of the material as possible and dispose of properly.

Minor Spills

(1) Minor spills typically involve small quantities of oil, gasoline, paint, etc. which can be controlled by the first responder at the discovery of the spill.
(2) Use absorbent materials on small spills rather than hosing down or burying the spill.

(3) Absorbent materials should be promptly removed and disposed of properly.
(4) Follow the practice below for a minor spill:
- Contain the spread of the spill
- Recover spilled materials
- Clean the contaminated area and properly dispose of contaminated materials.

Semi-Significant Spills

Semi-significant spills still can be controlled by the first responder along with the aid of other personnel such as laborers and the foreman, etc. This response may require the cessation of all other activities.

Spills should be cleaned up immediately:

(1) Contain spread of the spill.
(2) Notify the project foreman immediately.
(3) If the spill occurs on paved or impermeable surfaces, clean up using "dry" methods (absorbent materials, cat litter and/or rags). Contain the spill by encircling with absorbent materials and do not let the spill spread widely.
(4) If the spill occurs in dirt areas, immediately contain the spill by constructing an earthen dike. Dig up and properly dispose of contaminated soil.
(5) If the spill occurs during rain, cover spill with tarps or other material to prevent contaminating runoff.

Significant Spills

The Reportable Quantity (RQ) of any hazardous substance shall be the quantity designated as the Final Reportable Quantity in Table 302.4 in 40 CFR 302.4.

The Reportable Quantity for petroleum product and used oil shall be 25 gallons.

For significant or hazardous spills that are in reportable quantities:

(1) Notify the TCEQ by telephone as soon as possible and within 24 hours at 512-339-2929 (Austin) or 210-490-3096 (San Antonio) between 8 AM and 5 PM. After hours, contact the Environmental Release Hotline at 1-800-832-8224. It is the contractor's responsibility to have all emergency phone number at the construction site.
(2) For spills of federal reportable quantities, in conformance with the requirements in 40 CFS parts 110, 119, and 302, the contractor should notify the National Response Center at (800) 424-8802.
(3) Notification should first be made by telephone and followed up with a written report.
(4) The services of a spills contractor or a Haz-Mat team should be obtained immediately. Construction personnel should not attempt to clean up until the appropriate and qualified staffs have arrived at the job site.
(5) Other agencies which may need to be consulted include, but are not limited to, the City Police Department, County Sheriff Office, Fire Departments, etc.

More information on spill rules and appropriate responses is available on the TCEQ website at: http://www.tceq.state.tx.us/response/spills.html

Attachment B:
Potential Sources of Contamination

Potential sources of sediment to stormwater runoff:

(1) Clearing and grubbing
(2) Grading and excavation
(3) Vehicle tracking
(4) Landscaping

Potential pollutants and sources, other than sediment, to stormwater runoff:

(1) Combined staging area – small fueling, minor equipment maintenance, sanitary facility
(2) Materials storage area – solvents, adhesives, paving materials, aggregates, trash, etc.
(3) Construction activities – paving, concrete pouring
(4) Concrete washout area

Potential on-site pollutants:

(1) Gasoline, diesel fuel, hydraulic fluids, antifreeze
(2) Fertilizer
(3) Concrete
(4) Glue/adhesives
(5) Sanitary mobile toilets

Attachment C:
Sequence of Major Construction Activities

The sequence of major activities will be as follows:

1) Install tree protection and initiate tree mitigation measures.
2) Install erosion controls and off-site erosion controls as indicated on the approved plans.
3) Contact the City of Round Rock to schedule pre-construction coordination meeting.
4) Evaluate temporary erosion control installation. Review construction schedule with the erosion control plans.
5) Install traffic controls.
6) Begin site clearing and grading. Inspect and maintain all erosion control measures. (Total disturbed area = 30.90 acres)
7) Install retaining walls and permanent tree wells
8) Construct bridge drilled piers, bents, caps, beams, deck, and railing.
9) Install utility lines (i.e. water, gas, wastewater manholes, and storm sewer/culverts).
10) Install storm drain, inlets, and Stormtrooper units.
11) Install illumination poles, conduit, and signal poles.
12) Construct sidewalks and pave roadway.
13) Restripe Roadway and install signs
14) Revegetate and stabilize disturbed areas.
15) Remove temporary sedimentation controls at grass growth.
16) Schedule final inspection walk-through with the City of Round Rock.

The total disturbed area is approximately 30.9 acres.

The receiving waters for this project are Brushy Creek and Dry Fork Creek.

The construction sequencing is an approximation. The contractor has the ability to change the sequence of construction. If this occurs, then the responsible party shall update and receive approval form TCEQ according to procedure before any construction activity begins.

Attachment D:
Temporary Best Management Practices and Measures

Please see erosion and sedimentation control sheets for the temporary BMPs. The BMP's will be placed prior to all construction activities.

Prior to commencing construction, the following tasks will occur:

- Established stabilized construction entrance/exit.
- Placement of sediment control fence as shown on the erosion and sedimentation control layouts.
- Placement of tree protection as shown on the tree removal layouts.
- Placement of rock berms/rock filter dams as shown on the erosion and sedimentation control layouts.
- Implementation of cofferdams and dewatering as shown on the erosion and sedimentation control layouts.

Additional notes regarding temporary BMP's:

A. Prior to commencement of site clearing, topsoil removal and grading, install perimeter swales and dikes at the down slope edge of the area to be graded. Rock berms and sediment control fence will treat runoff originating up-gradient from the site. Water flowing from up gradient sources north and west of the Sam Bass Rd project limits will be conveyed around the site via existing roadside ditches and through the site via existing cross culverts.

B. Sediment laden storm water generated on-site will be treated using sediment control fence, rock berm, cofferdams, dewatering operations, and construction exits. Runoff entering the storm sewer system will be filtered using inlet protection and sediment traps. Runoff which is not contained in the storm sewer system is filtered by sediment control fence or rock berms before leaving the site. Construction entrances will supplement the control of off-site tracking of contaminated materials. Cofferdams and dewatering operations will protect and filter out sediment due to work done in waterways. The last stabilization measure will be the application of mulched seeding and rock riprap. This measure will cover and stabilize all areas disturbed by construction.

C. Material storage will be managed in designated areas determined by the contractor. Containment and/or drainage control will be used for portable toilets or any hazardous materials.

D. All entrance points to the surface streams (unnamed ephemeral tributary of Brushy Creek, Brushy Creek & Dry Fork Creek) have temporary BMPs in place to aid in treating the runoff from the site before it leaves the limits of construction. The control measures in place are rock filter dams, sediment control fences, and curb inlet protection. Stabilized construction exits will supplement the control of off-site tracking of materials. After construction is complete, the site will be stabilized by mulch seeding and riprap under each bridge.

E. The proposed project seeks to honor the natural drainage divides and ensure that water is not diverted from its natural course. Perimeter swales along the upstream side of the proposed roadway will direct water to the same discharge point downstream of the site. By honoring natural drainage divides, intermediate and final construction improvements will release water into the same stream respectively (unnamed ephemeral tributary of Brushy Creek, Brushy Creek & Dry Fork Creek)

Attachment F: Structural Practices

The following temporary BMP structural practices will be employed on site:

- **Silt Fence:** used as barrier protection around the perimeter of the project. The fence retains sediment primarily by retarding flow and promoting deposition on the uphill side of the slope. Runoff is filtered as is passes through the geotextile. Silt fence will be places outside of the 100-year water surface elevation.
- **Rock Berms:** placed at various locations along swales to aide in mitigating erosion and sediment trapping.
- **Inlet Protection:** will be provided around all existing and proposed storm sewer inlets during construction. Locations are indicated on the SW3P sheets. These measures will trap and settle out pollutants from the onsite runoff before the runoff enters the storm drain system and exits the site.
- **Stabilized Construction Exits:** Anti-tracking pads consisting of stone will be installed at the exit to each phase of construction to prevent the off-site transport of sediment by construction vehicles. The anti-tracking pads will be at least 50 feet long, a minimum of 10 feet wide, flared at the end closest to the paved road, and will consist of an 8-inch-thick layer of crushed stone. The crushed stone will be placed over a layer of geotextile filter fabric to reduce the mitigation of sediment from the underlying soil.
- **Dewatering operations:** manages the discharge of pollutants when non-stormwater and accumulated precipitation or groundwater must be removed from a work location so that construction work may be accomplished.
- **Concrete Washout Area:** prevents or reduces the discharge of pollutants to stormwater from concrete waste by performing onsite washout in a designated area by trained employees and subcontractors.

As a portion of the project is within the 100-year floodplain, placement for structural practices in the floodplain could not be avoided. In order to prevent sediment from discharging from the site, silt fence and rock berms will be utilized as temporary BMPs within the floodplain where necessary.

Attachment G:
Drainage Area Maps

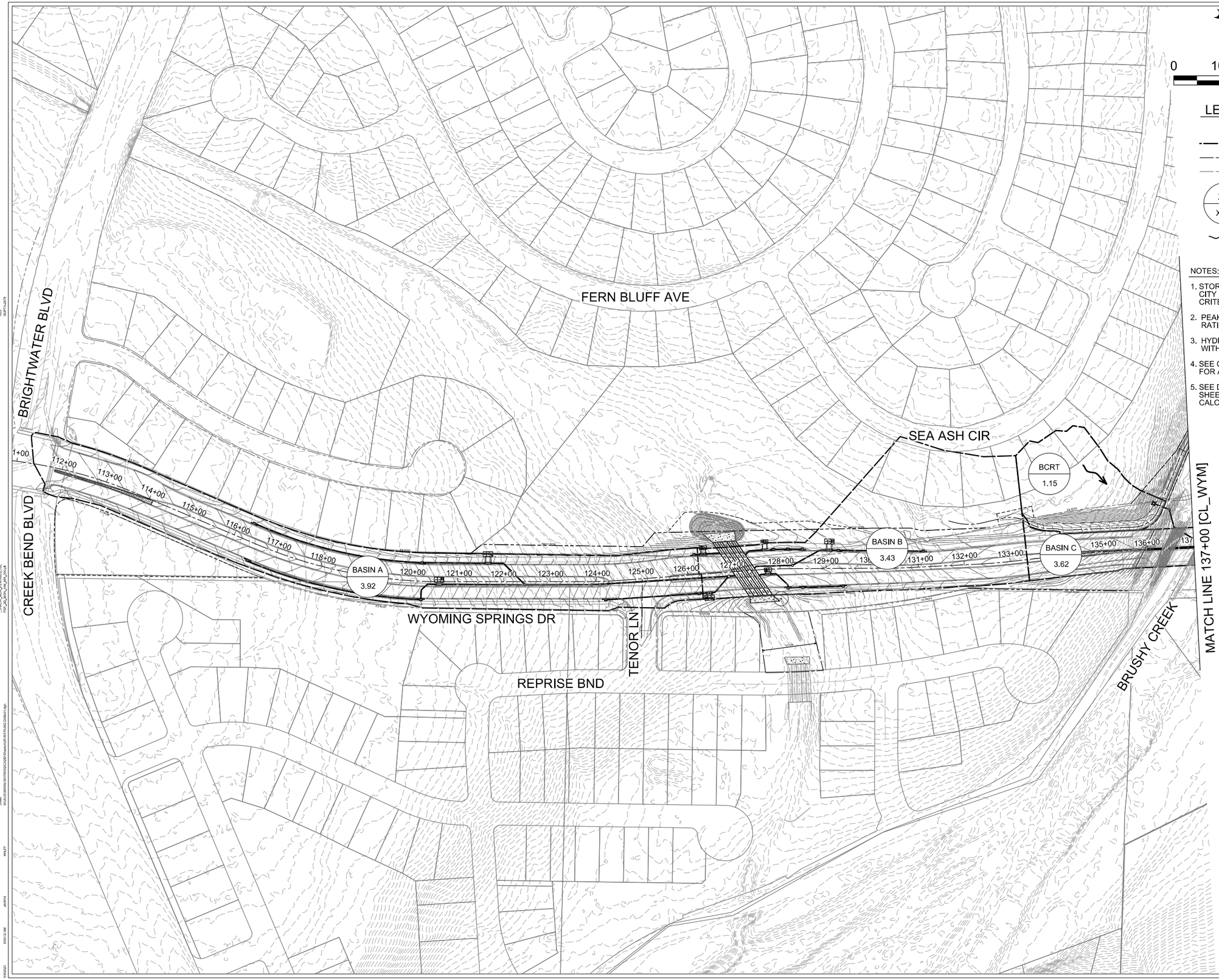

0 100 200 300 400

SCALE: 1"=200'

LEGEND

- DRAINAGE AREA BOUNDARY
- PROPOSED ROW
- EXISTING ROW
- X-X / X.XX — AREA ID / DRAINAGE AREA IN ACRES
- OVERLAND FLOW DIRECTION

NOTES:

1. STORM RUNOFF CALCULATIONS PER CITY OF ROUND ROCK DRAINAGE CRITERIA MANUAL.
2. PEAK FLOWS COMPUTED USING RATIONAL METHOD.
3. HYDRAULIC COMPUTATIONS PERFORMED WITH STORMCAD 10.03.01.08.
4. SEE OVERALL DRAINAGE AREA MAP FOR ADDITIONAL INFORMATION.
5. SEE DRAINAGE CALCULATION SHEETS FOR BASIN RUNOFF CALCULATIONS.

WYOMING SPRINGS
SEGMENT 1
ROUND ROCK, TX

ROUND ROCK TEXAS

halff
13620 BRIARWICK DR
BLDG C, STE 100
AUSTIN, TX 78729
(512) 777-4600
TBPELS FIRM #312

Revision		
No.	Date	Description

F-312 4/5/23
STATE OF TEXAS
JEFFREY L. NAGY
133255
LICENSED
PROFESSIONAL ENGINEER

100% SUBMITTAL

Project No.:	36179.002
Issued:	5/9/2023
Drawn By:	SG
Checked By:	JN
Scale:	1"=200'

Sheet Title
OVERALL DRAINAGE AREA MAP (1 OF 3)

151
Sheet Number

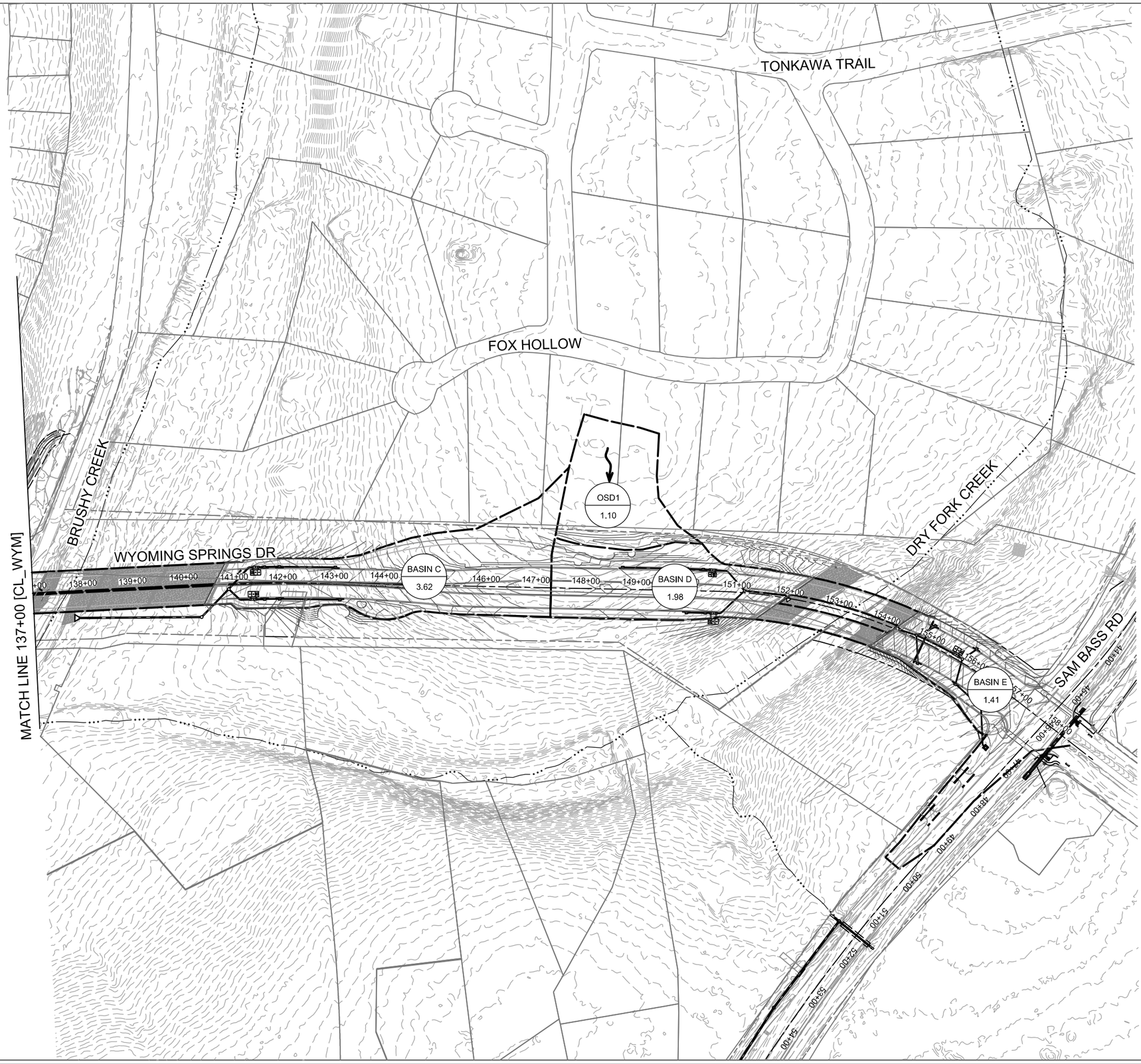

0 100 200 300 400

SCALE: 1"=200'

N

LEGEND

- DRAINAGE AREA BOUNDARY
- PROPOSED ROW
- EXISTING ROW
- X-X / X.XX — AREA ID / DRAINAGE AREA IN ACRES
- OVERLAND FLOW DIRECTION

NOTES:

1. STORM RUNOFF CALCULATIONS PER CITY OF ROUND ROCK DRAINAGE CRITERIA MANUAL.
2. PEAK FLOWS COMPUTED USING RATIONAL METHOD.
3. HYDRAULIC COMPUTATIONS PERFORMED WITH STORMCAD 10.03.01.08.
4. SEE OVERALL DRAINAGE AREA MAP FOR ADDITIONAL INFORMATION.
5. SEE DRAINAGE CALCULATION SHEETS FOR BASIN RUNOFF CALCULATIONS.

WYOMING SPRINGS
SEGMENT 1
ROUND ROCK, TX

ROUND ROCK TEXAS

halff
13620 BRANTWICK DR
BLDG C, STE 100
AUSTIN, TX 78729
(512) 777-4600
TBPELS FIRM #312

Revision No.	Date	Description

F-312 8/14/23
STATE OF TEXAS
JEFFREY L. NAGY
133255
LICENSED PROFESSIONAL ENGINEER

100% SUBMITTAL

Project No.:	36179.002
Issued:	8/24/2023
Drawn By:	SG
Checked By:	JN
Scale:	1"=200'

Sheet Title
OVERALL DRAINAGE AREA MAP (2 OF 3)

152
Sheet Number

MAJOR BASINS

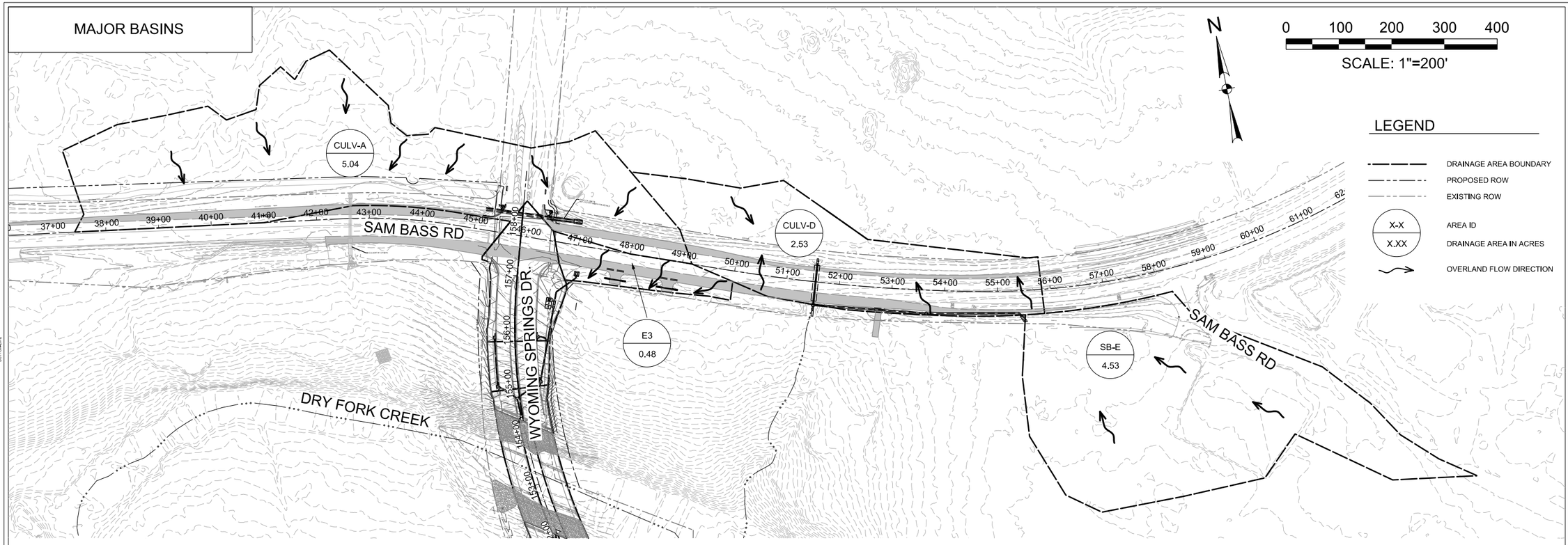

SUB-BASINS

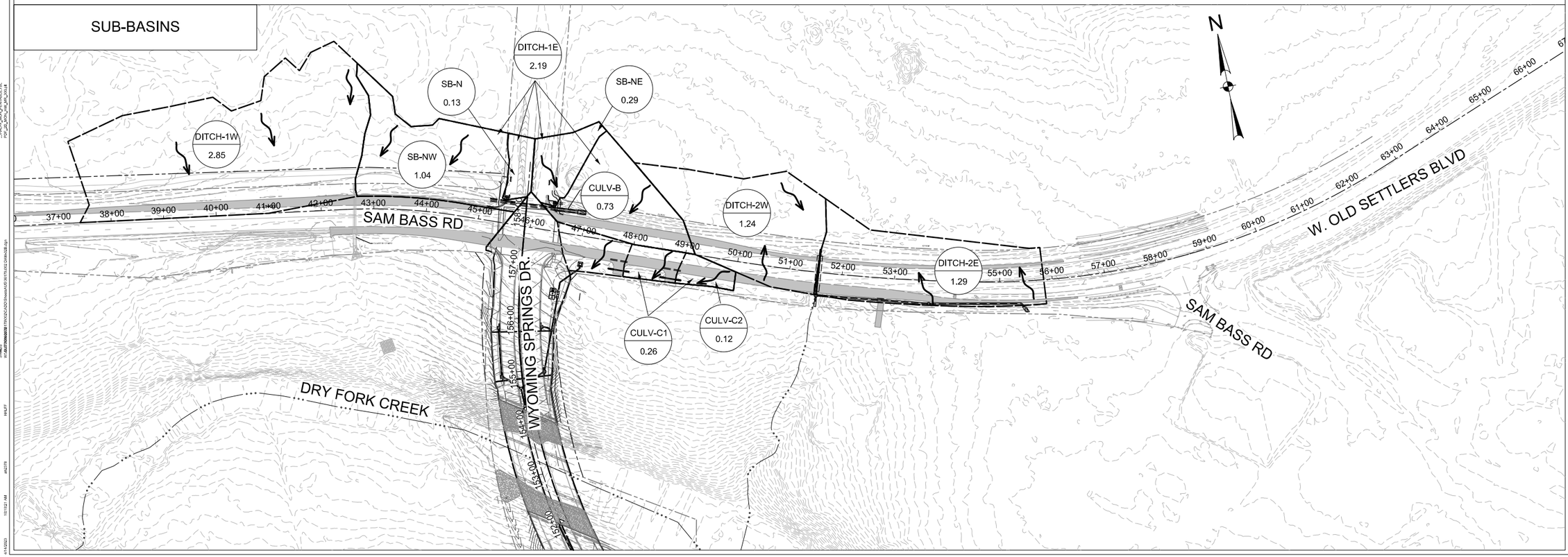

WYOMING SPRINGS
SEGMENT 1
ROUND ROCK, TX

ROUND ROCK
TEXAS

halff
13620 BRANTWICK DR
BLDG C, STE 100
AUSTIN, TX 78729
(512) 777-4600
TBPELS FIRM #312

Revision No.	Date	Description

F-312
4-14-23
STATE OF TEXAS
ANDREW M. L. DUTTON
117255
LICENSED
PROFESSIONAL ENGINEER

100% SUBMITTAL

Project No.:	36179.002
Issued:	4/14/2023
Drawn By:	SC
Checked By:	JN
Scale:	1"=200'

Sheet Title
OVERALL
DRAINAGE AREA MAP
(3 OF 3)

153
Sheet Number

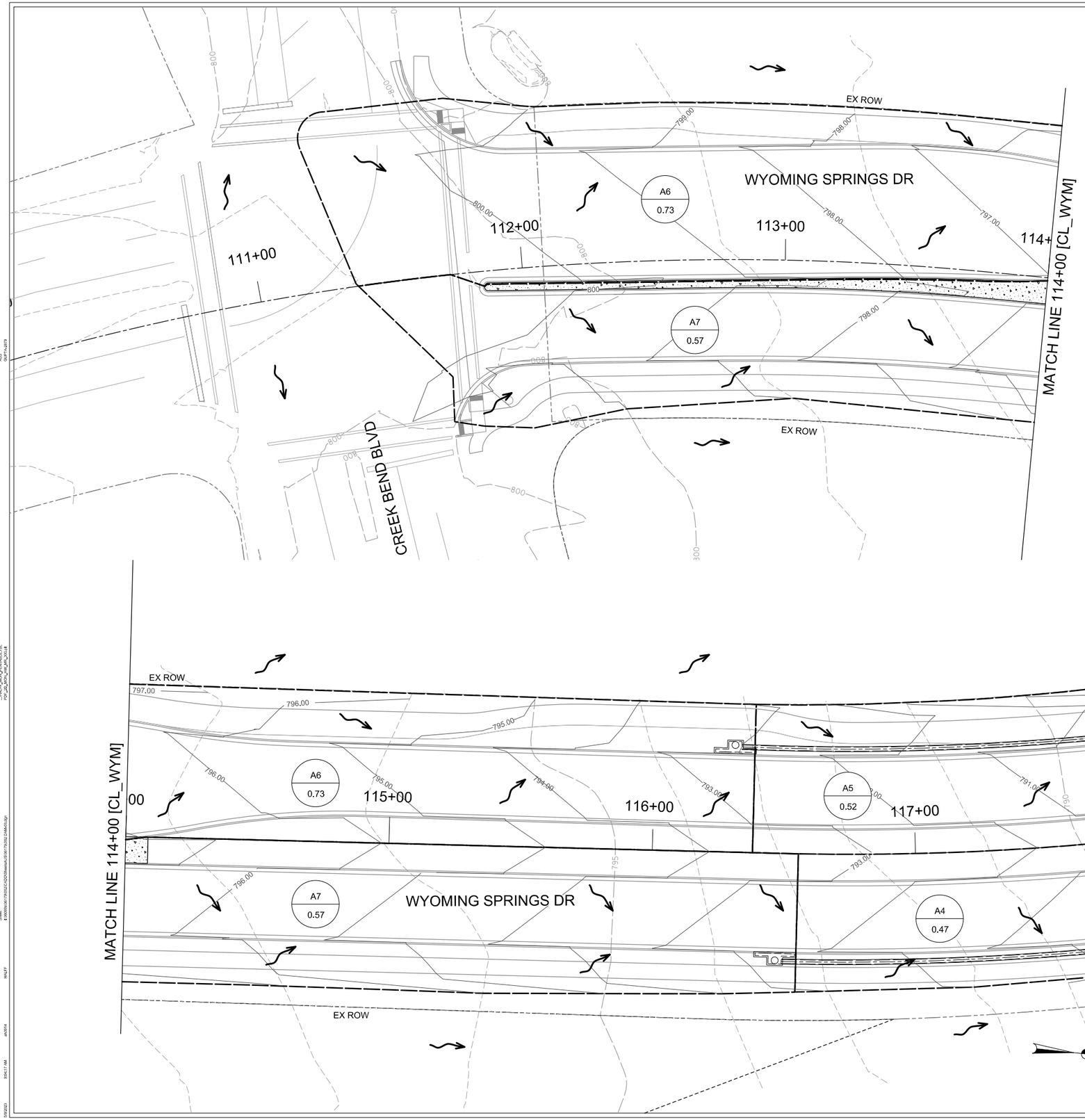

0 20 40 60 80

SCALE: 1"=40'

LEGEND

- DRAINAGE AREA BOUNDARY
- PROPOSED ROW
- EXISTING ROW
- X-X / X.XX — AREA ID / DRAINAGE AREA IN ACRES
- OVERLAND FLOW DIRECTION

NOTES:

1. STORM RUNOFF CALCULATIONS PER CITY OF ROUND ROCK DRAINAGE CRITERIA MANUAL.
2. PEAK FLOWS COMPUTED USING RATIONAL METHOD.
3. HYDRAULIC COMPUTATIONS PERFORMED WITH STORMCAD 10.03.01.08.
4. SEE OVERALL DRAINAGE AREA MAP FOR ADDITIONAL INFORMATION.
5. SEE DRAINAGE CALCULATION SHEETS FOR BASIN RUNOFF CALCULATIONS.

WYOMING SPRINGS
SEGMENT 1
ROUND ROCK, TX

ROUND ROCK TEXAS

halff
13620 BRANTWICK DR
BLDG C, STE 100
AUSTIN, TX 78729
(512) 777-4600
TBPELS FIRM #312

Revision No.	Date	Description

STATE OF TEXAS
JEFFREY L. NAGY
133255
LICENSED
PROFESSIONAL ENGINEER
4/5/23

100% SUBMITTAL

Project No.:	36179.002
Issued:	5/9/2023
Drawn By:	SG
Checked By:	JN
Scale:	1"=40'

Sheet Title
DRAINAGE AREA MAP
(1 OF 9)

154
Sheet Number

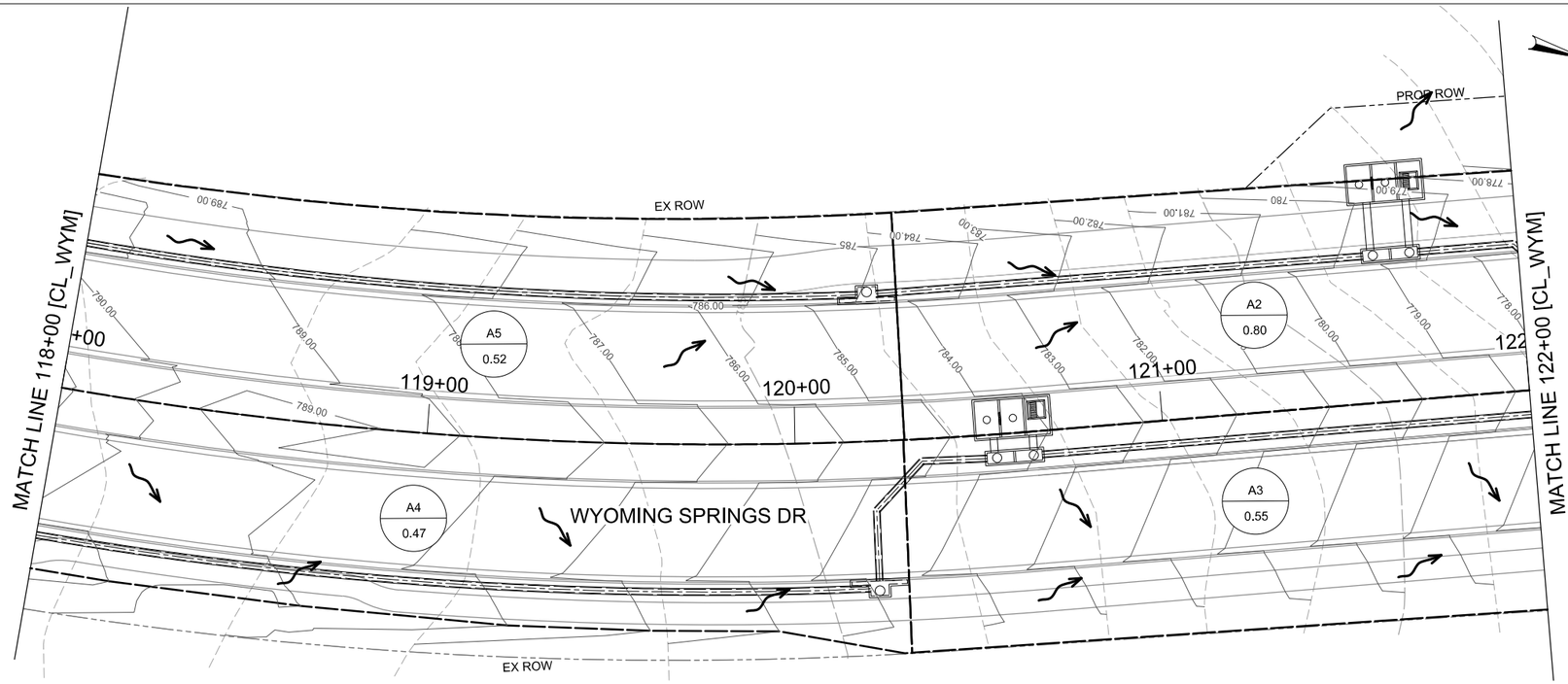

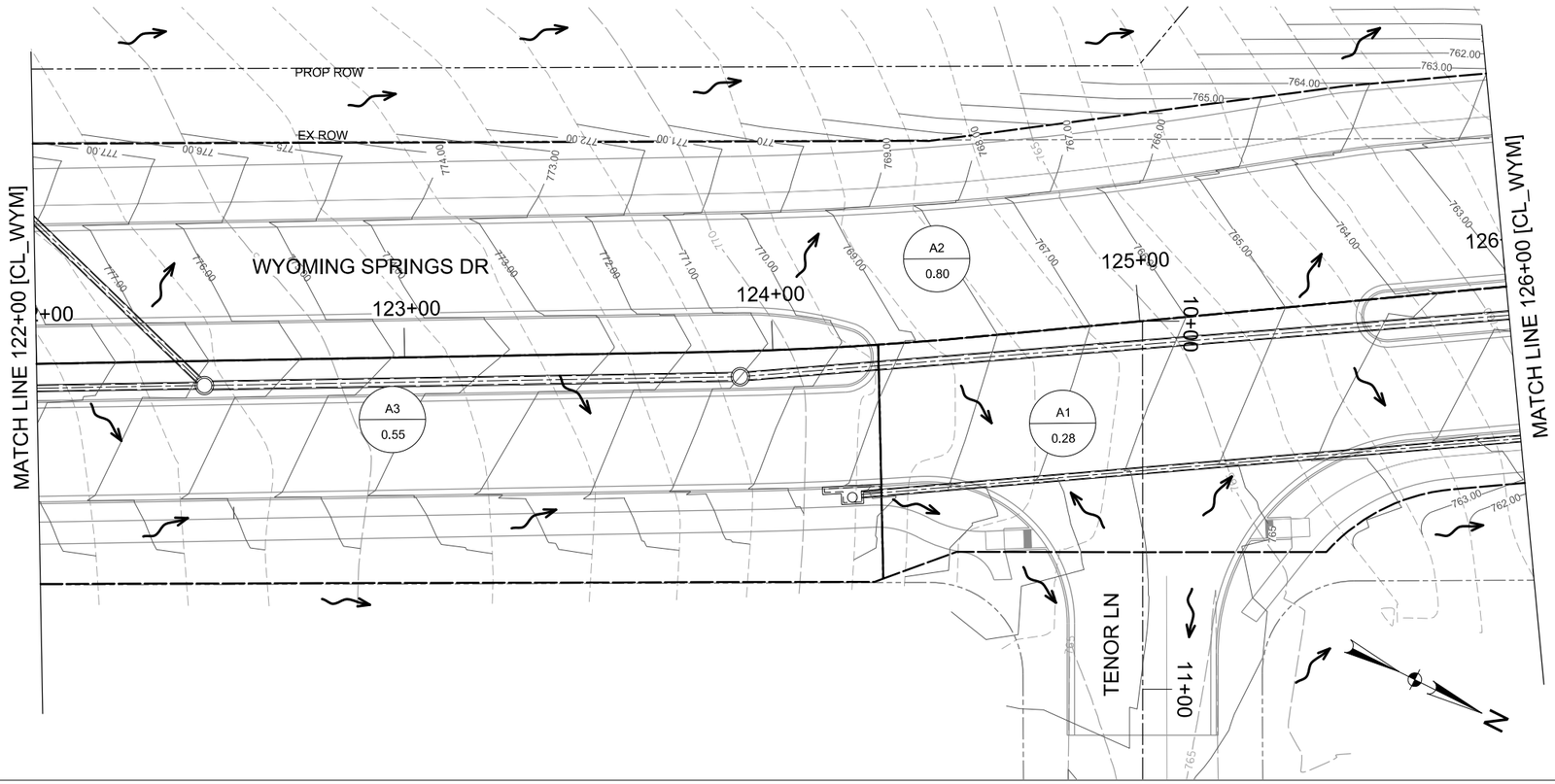

0 20 40 60 80

SCALE: 1"=40'

LEGEND

- DRAINAGE AREA BOUNDARY
- PROPOSED ROW
- EXISTING ROW
- X-X / X.XX — AREA ID / DRAINAGE AREA IN ACRES
- OVERLAND FLOW DIRECTION

NOTES:

1. STORM RUNOFF CALCULATIONS PER CITY OF ROUND ROCK DRAINAGE CRITERIA MANUAL.
2. PEAK FLOWS COMPUTED USING RATIONAL METHOD.
3. HYDRAULIC COMPUTATIONS PERFORMED WITH STORMCAD 10.03.01.08.
4. SEE OVERALL DRAINAGE AREA MAP FOR ADDITIONAL INFORMATION.
5. SEE DRAINAGE CALCULATION SHEETS FOR BASIN RUNOFF CALCULATIONS.

WYOMING SPRINGS
SEGMENT 1
ROUND ROCK, TX

ROUND ROCK TEXAS

halff
13620 BRIARWICK DR
BLDG C, STE 100
AUSTIN, TX 78729
(512) 777-4600
TBPELS FIRM #312

Revision No.	Date	Description

F-312 4/5/23
STATE OF TEXAS
JEFFREY L. NAGY
133255
LICENSED PROFESSIONAL ENGINEER

100% SUBMITTAL

Project No.:	36179.002
Issued:	5/9/2023
Drawn By:	SG
Checked By:	JN
Scale:	1"=40'

Sheet Title
DRAINAGE AREA MAP
(2 OF 9)

155
Sheet Number

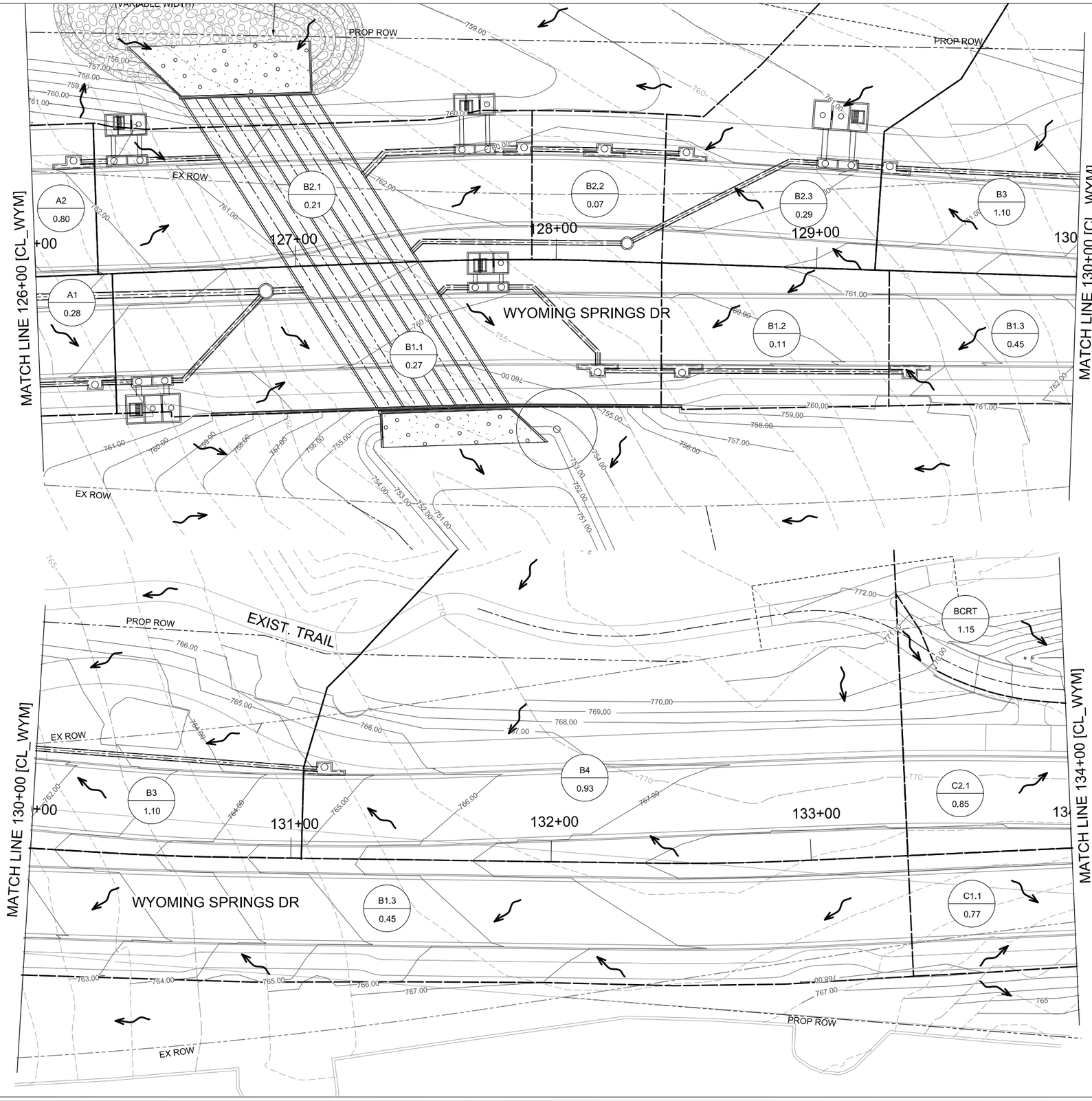

LEGEND

- DRAINAGE AREA BOUNDARY
- PROPOSED ROW
- EXISTING ROW
- X-X / X.XX — AREA ID / DRAINAGE AREA IN ACRES
- OVERLAND FLOW DIRECTION

NOTES:

1. STORM RUNOFF CALCULATIONS PER CITY OF ROUND ROCK DRAINAGE CRITERIA MANUAL.
2. PEAK FLOWS COMPUTED USING RATIONAL METHOD.
3. HYDRAULIC COMPUTATIONS PERFORMED WITH STORMCAD 10.03.01.08.
4. SEE OVERALL DRAINAGE AREA MAP FOR ADDITIONAL INFORMATION.
5. SEE DRAINAGE CALCULATION SHEETS FOR BASIN RUNOFF CALCULATIONS.

WYOMING SPRINGS
SEGMENT 1
ROUND ROCK, TX

ROUND ROCK
TEXAS

halff
13620 BRAKMICK DR
BLDG C, STE 100
AUSTIN, TX 78729
(512) 777-4600
TBPELS FIRM #312

Revision No.	Date	Description

STATE OF TEXAS
JEFFREY L. NAGY
133255
LICENSED
PROFESSIONAL ENGINEER
5/5/23

100% SUBMITTAL

Project No.:	36179.002
Issued:	5/9/2023
Drawn By:	SG
Checked By:	JN
Scale:	1"=40'

Sheet Title
DRAINAGE AREA MAP
(3 OF 9)

156
Sheet Number

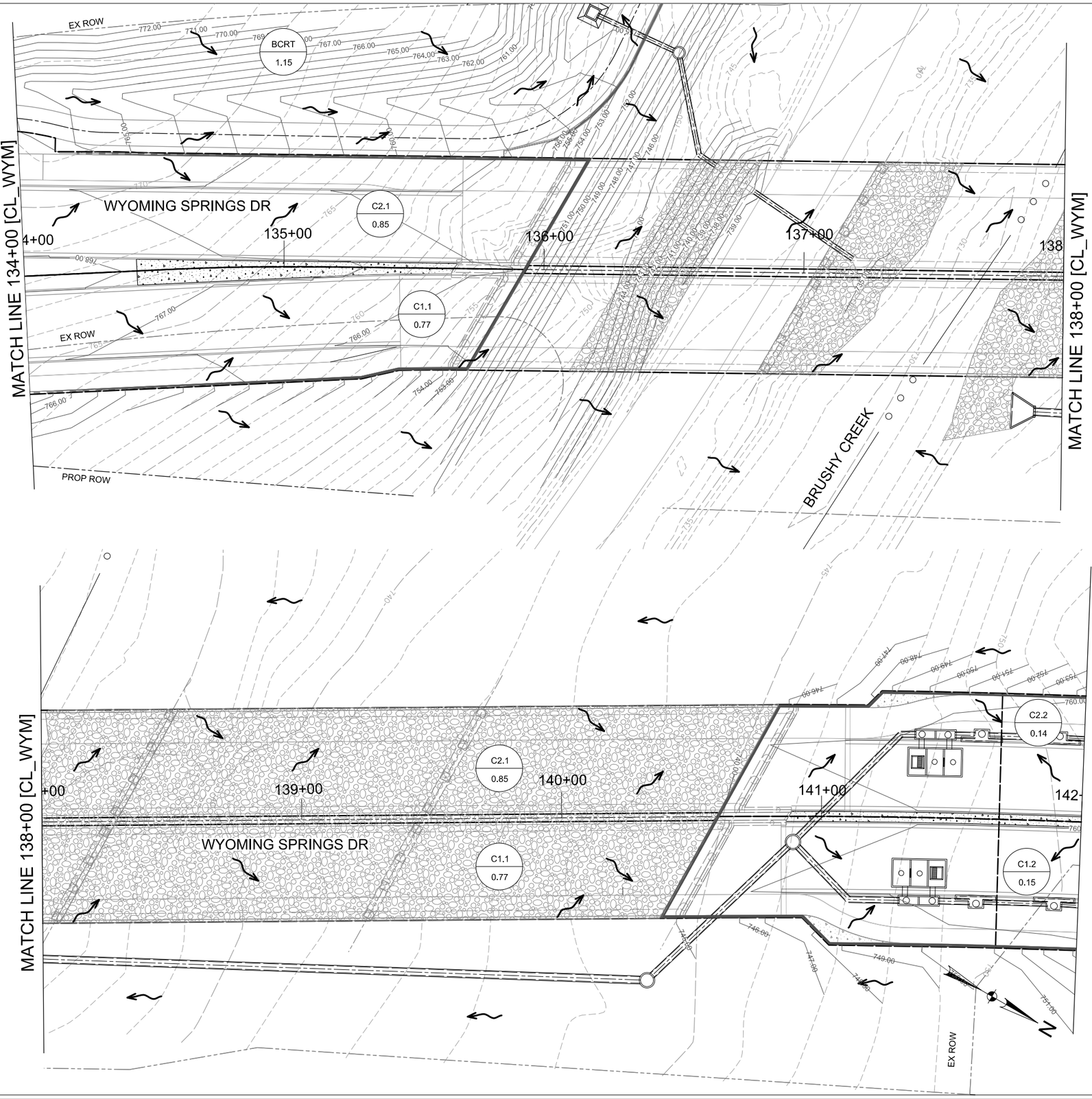

0 20 40 60 80

SCALE: 1"=40'

LEGEND

- DRAINAGE AREA BOUNDARY
- PROPOSED ROW
- EXISTING ROW
- X-X / X.XX — AREA ID / DRAINAGE AREA IN ACRES
- OVERLAND FLOW DIRECTION

NOTES:

1. STORM RUNOFF CALCULATIONS PER CITY OF ROUND ROCK DRAINAGE CRITERIA MANUAL.
2. PEAK FLOWS COMPUTED USING RATIONAL METHOD.
3. HYDRAULIC COMPUTATIONS PERFORMED WITH STORMCAD 10.03.01.08.
4. SEE OVERALL DRAINAGE AREA MAP FOR ADDITIONAL INFORMATION.
5. SEE DRAINAGE CALCULATION SHEETS FOR BASIN RUNOFF CALCULATIONS.

WYOMING SPRINGS
SEGMENT 1
ROUND ROCK, TX

ROUND ROCK TEXAS

halff
13620 BRANTWICK DR
BLDG C, STE 100
AUSTIN, TX 78729
(512) 777-4800
TBPELS FIRM #312

Revision No.	Date	Description

F-312 4/5/23

STATE OF TEXAS
JEFFREY L. NAGY
133255
LICENSED
PROFESSIONAL ENGINEER

100% SUBMITTAL

Project No.:	36179.002
Issued:	5/9/2023
Drawn By:	SG
Checked By:	JN
Scale:	~~1"=40'~~

Sheet Title
DRAINAGE AREA MAP
(4 OF 9)

157
Sheet Number

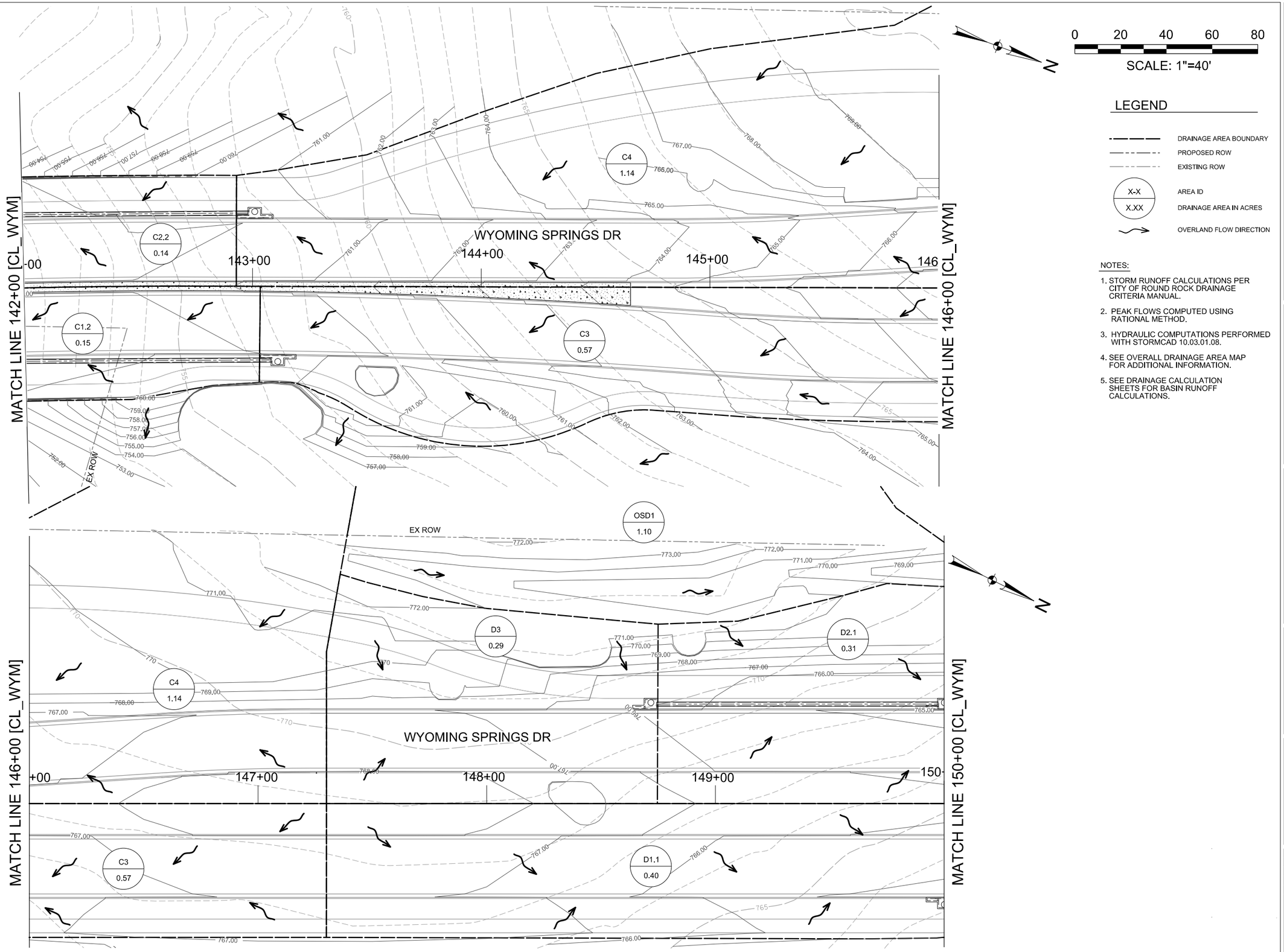

0 20 40 60 80

SCALE: 1"=40'

LEGEND

- DRAINAGE AREA BOUNDARY
- PROPOSED ROW
- EXISTING ROW
- X-X / X.XX — AREA ID / DRAINAGE AREA IN ACRES
- OVERLAND FLOW DIRECTION

NOTES:

1. STORM RUNOFF CALCULATIONS PER CITY OF ROUND ROCK DRAINAGE CRITERIA MANUAL.
2. PEAK FLOWS COMPUTED USING RATIONAL METHOD.
3. HYDRAULIC COMPUTATIONS PERFORMED WITH STORMCAD 10.03.01.08.
4. SEE OVERALL DRAINAGE AREA MAP FOR ADDITIONAL INFORMATION.
5. SEE DRAINAGE CALCULATION SHEETS FOR BASIN RUNOFF CALCULATIONS.

WYOMING SPRINGS
SEGMENT 1
ROUND ROCK, TX

ROUND ROCK TEXAS

halff
13620 BRANTWICK DR
BLDG C, STE 100
AUSTIN, TX 78729
(512) 777-4600
TBPELS FIRM #312

Revision		
No.	Date	Description

F-312 5/5/23
STATE OF TEXAS
JEFFREY L. NAGY
133255
LICENSED
PROFESSIONAL ENGINEER

100% SUBMITTAL

Project No.:	36179.002
Issued:	5/9/2023
Drawn By:	SG
Checked By:	JN
Scale:	1"=40'

Sheet Title
DRAINAGE AREA MAP
(5 OF 9)

158
Sheet Number

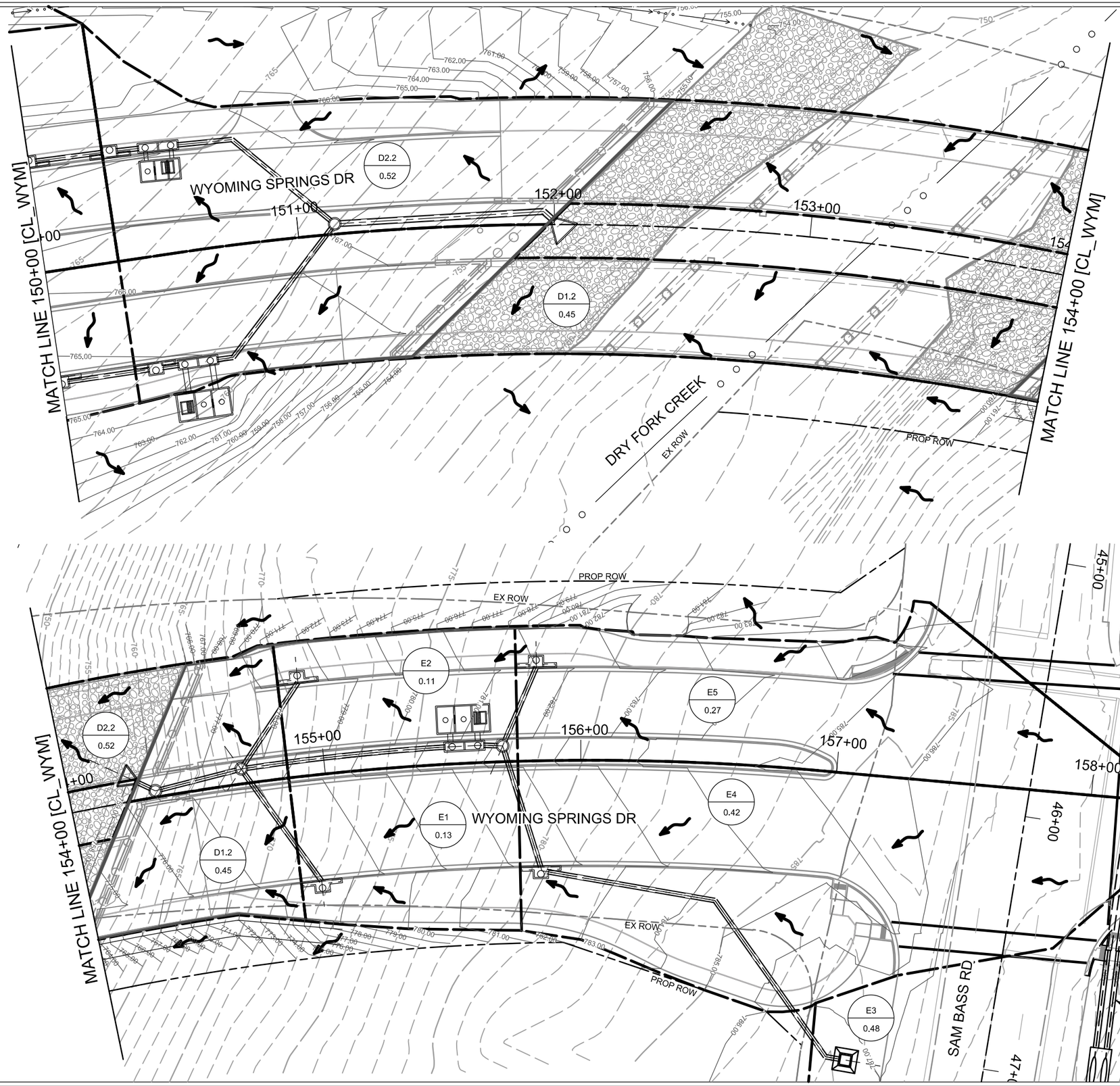

N

0 20 40 60 80

SCALE: 1"=40'

LEGEND

- DRAINAGE AREA BOUNDARY
- PROPOSED ROW
- EXISTING ROW
- X-X / X.XX — AREA ID / DRAINAGE AREA IN ACRES
- OVERLAND FLOW DIRECTION

NOTES:

1. STORM RUNOFF CALCULATIONS PER CITY OF ROUND ROCK DRAINAGE CRITERIA MANUAL.
2. PEAK FLOWS COMPUTED USING RATIONAL METHOD.
3. HYDRAULIC COMPUTATIONS PERFORMED WITH STORMCAD 10.03.01.08.
4. SEE OVERALL DRAINAGE AREA MAP FOR ADDITIONAL INFORMATION.
5. SEE DRAINAGE CALCULATION SHEETS FOR BASIN RUNOFF CALCULATIONS.

WYOMING SPRINGS
SEGMENT 1
ROUND ROCK, TX

ROUND ROCK TEXAS

halff
13620 BRANTWICK DR
BLDG C, STE 100
AUSTIN, TX 78729
(512) 777-4600
TBPELS FIRM #312

Revision No.	Date	Description

F-312 8/14/23
STATE OF TEXAS
JEFFREY L. NAGY
133255
LICENSED PROFESSIONAL ENGINEER

100% SUBMITTAL

Project No.:	36179.002
Issued:	8/24/2023
Drawn By:	SG
Checked By:	JN
Scale:	1"=40'

Sheet Title
DRAINAGE AREA MAP
(6 OF 9)

159
Sheet Number

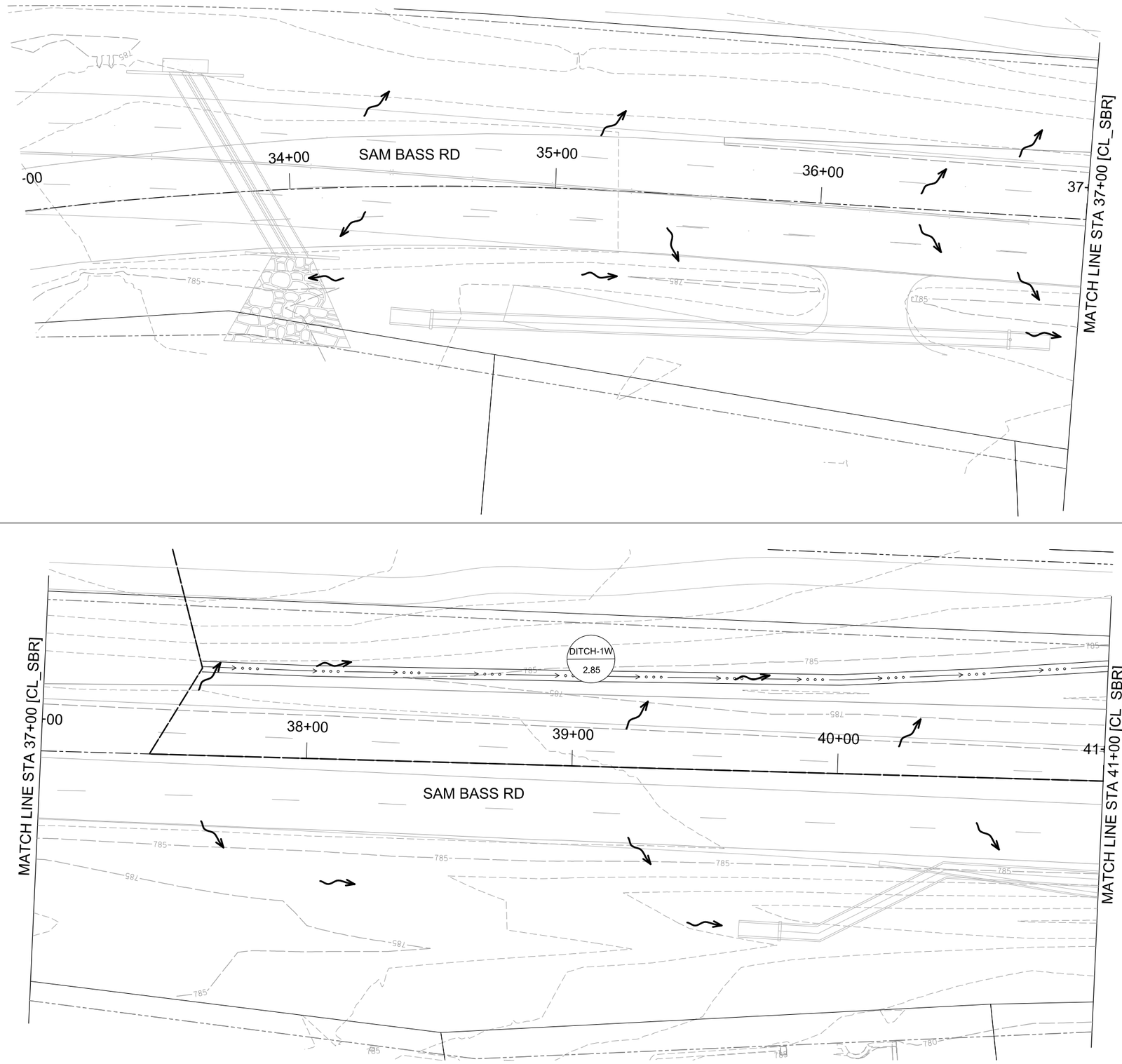

N

0 20 40 60 80

SCALE: 1"=40'

LEGEND

- DRAINAGE AREA BOUNDARY
- PROPOSED ROW
- EXISTING ROW
- X-X / X.XX — AREA ID / DRAINAGE AREA IN ACRES
- OVERLAND FLOW DIRECTION

NOTES:

1. STORM RUNOFF CALCULATIONS PER CITY OF ROUND ROCK DRAINAGE CRITERIA MANUAL.
2. PEAK FLOWS COMPUTED USING RATIONAL METHOD.
3. HYDRAULIC COMPUTATIONS PERFORMED WITH STORMCAD 10.03.01.08.
4. SEE OVERALL DRAINAGE AREA MAP FOR ADDITIONAL INFORMATION.
5. SEE DRAINAGE CALCULATION SHEETS FOR BASIN RUNOFF CALCULATIONS.

WYOMING SPRINGS
SEGMENT 1
ROUND ROCK, TX

ROUND ROCK TEXAS

halff
13620 BRANTWICK DR
BLDG C, STE 100
AUSTIN, TX 78729
(512) 777-4600
TBPELS FIRM #312

Revision No.	Date	Description

F312 4-14-23
STATE OF TEXAS
ANDREW M. L. DUTTON
117255
LICENSED
PROFESSIONAL ENGINEER

100% SUBMITTAL

Project No.:	36179.002
Issued:	4/14/2023
Drawn By:	SC
Checked By:	JN
Scale:	1"=40'

Sheet Title
DRAINAGE AREA MAP
(7 OF 9)

160
Sheet Number

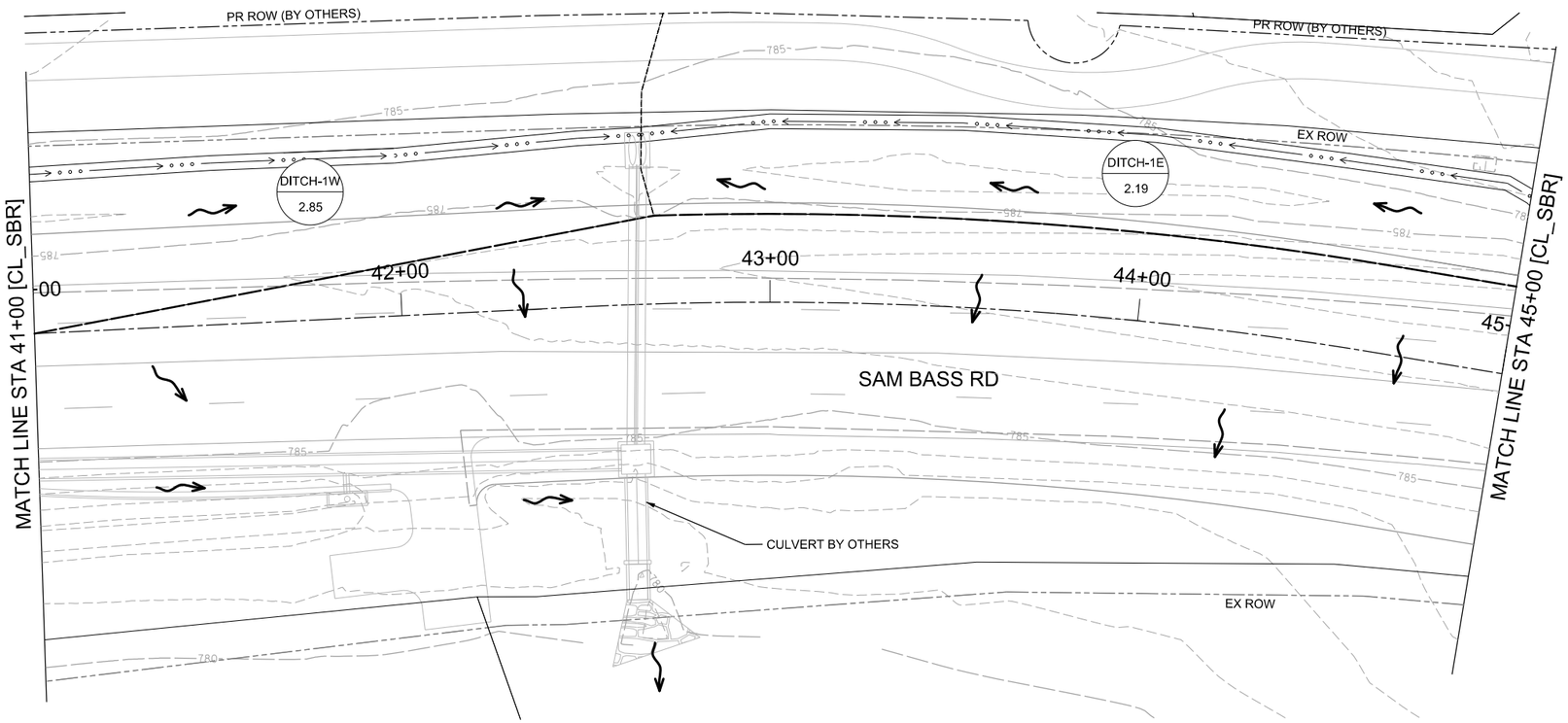



0 20 40 60 80

SCALE: 1"=40'

LEGEND

- DRAINAGE AREA BOUNDARY
- PROPOSED ROW
- EXISTING ROW
- X-X / X.XX — AREA ID / DRAINAGE AREA IN ACRES
- OVERLAND FLOW DIRECTION

NOTES:

1. STORM RUNOFF CALCULATIONS PER CITY OF ROUND ROCK DRAINAGE CRITERIA MANUAL.
2. PEAK FLOWS COMPUTED USING RATIONAL METHOD.
3. HYDRAULIC COMPUTATIONS PERFORMED WITH STORMCAD 10.03.01.08.
4. SEE OVERALL DRAINAGE AREA MAP FOR ADDITIONAL INFORMATION.
5. SEE DRAINAGE CALCULATION SHEETS FOR BASIN RUNOFF CALCULATIONS.

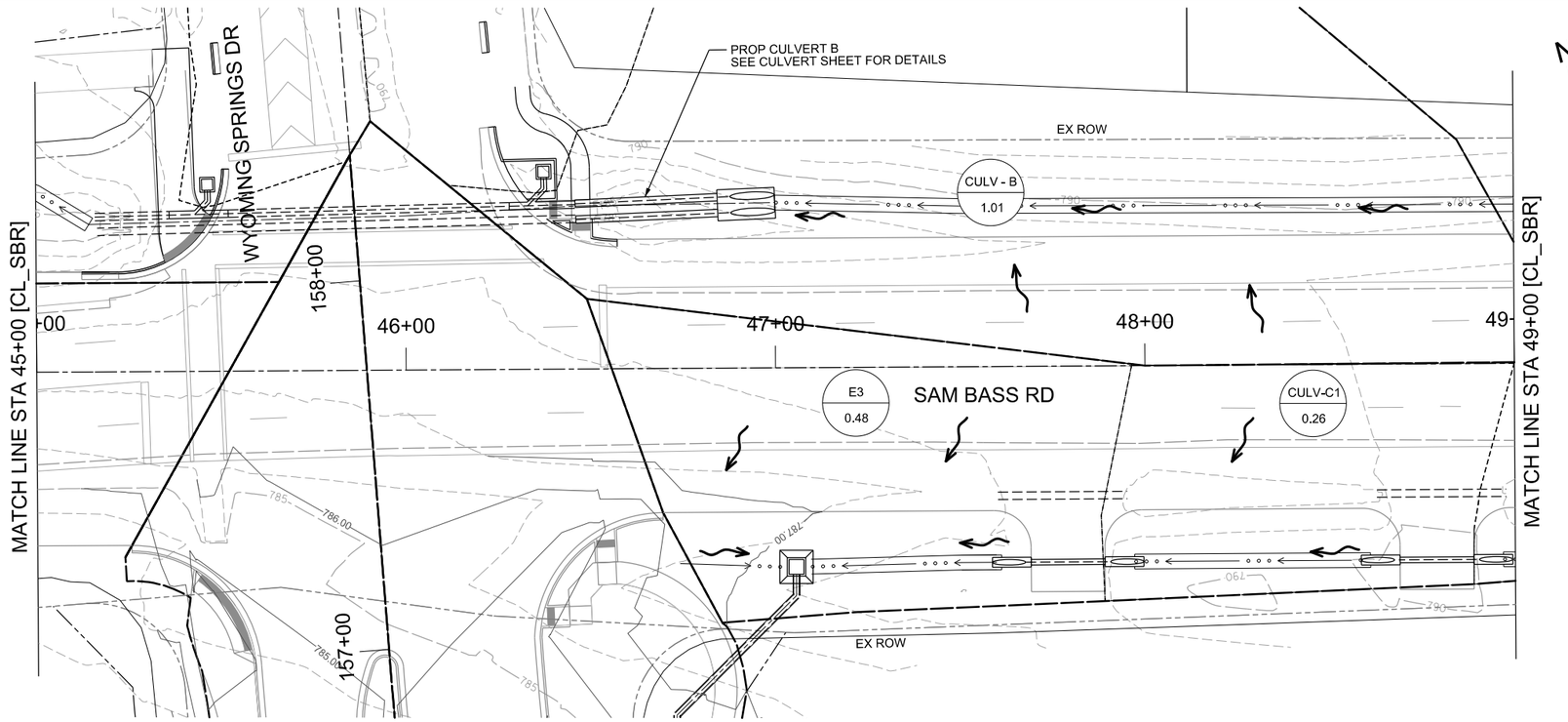



WYOMING SPRINGS
SEGMENT 1
ROUND ROCK, TX

ROUND ROCK
TEXAS

halff
13620 BRANTWICK DR
BLDG C, STE 100
AUSTIN, TX 78729
(512) 777-4600
TBPELS FIRM #312

Revision No.	Date	Description

F-312 STATE OF TEXAS 4-14-23
ANDREW M. L. DUTTON
117255
LICENSED
PROFESSIONAL ENGINEER

100% SUBMITTAL

Project No.:	36179.002
Issued:	4/14/2023
Drawn By:	SC
Checked By:	JN
Scale:	1"=40'

Sheet Title
DRAINAGE AREA MAP
(8 OF 9)

161
Sheet Number

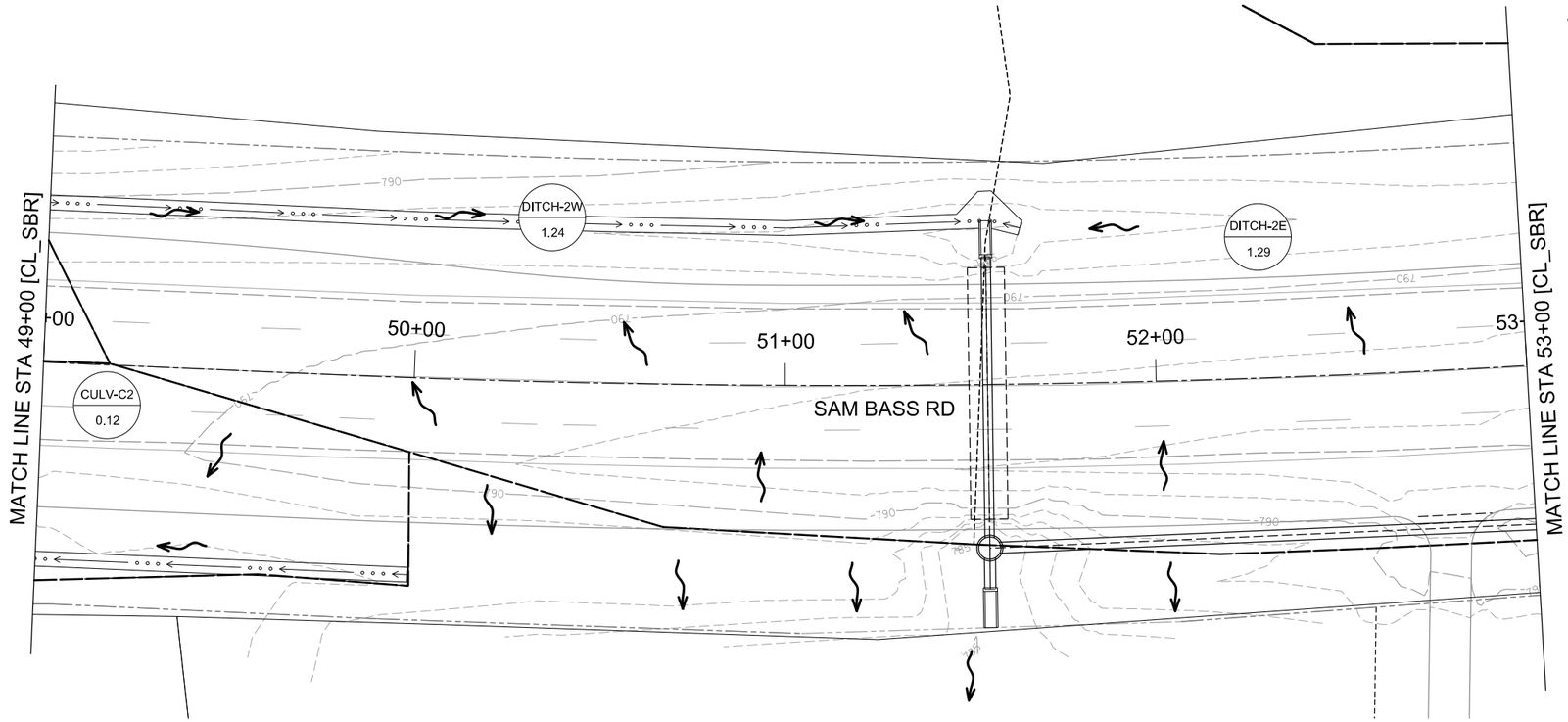

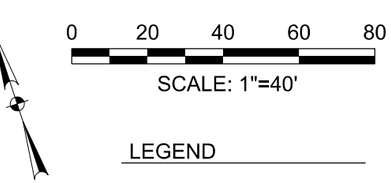

LEGEND

- DRAINAGE AREA BOUNDARY
- PROPOSED ROW
- EXISTING ROW
- X-X / X.XX — AREA ID / DRAINAGE AREA IN ACRES
- OVERLAND FLOW DIRECTION

NOTES:

1. STORM RUNOFF CALCULATIONS PER CITY OF ROUND ROCK DRAINAGE CRITERIA MANUAL.
2. PEAK FLOWS COMPUTED USING RATIONAL METHOD.
3. HYDRAULIC COMPUTATIONS PERFORMED WITH STORMCAD 10.03.01.08.
4. SEE OVERALL DRAINAGE AREA MAP FOR ADDITIONAL INFORMATION.
5. SEE DRAINAGE CALCULATION SHEETS FOR BASIN RUNOFF CALCULATIONS.

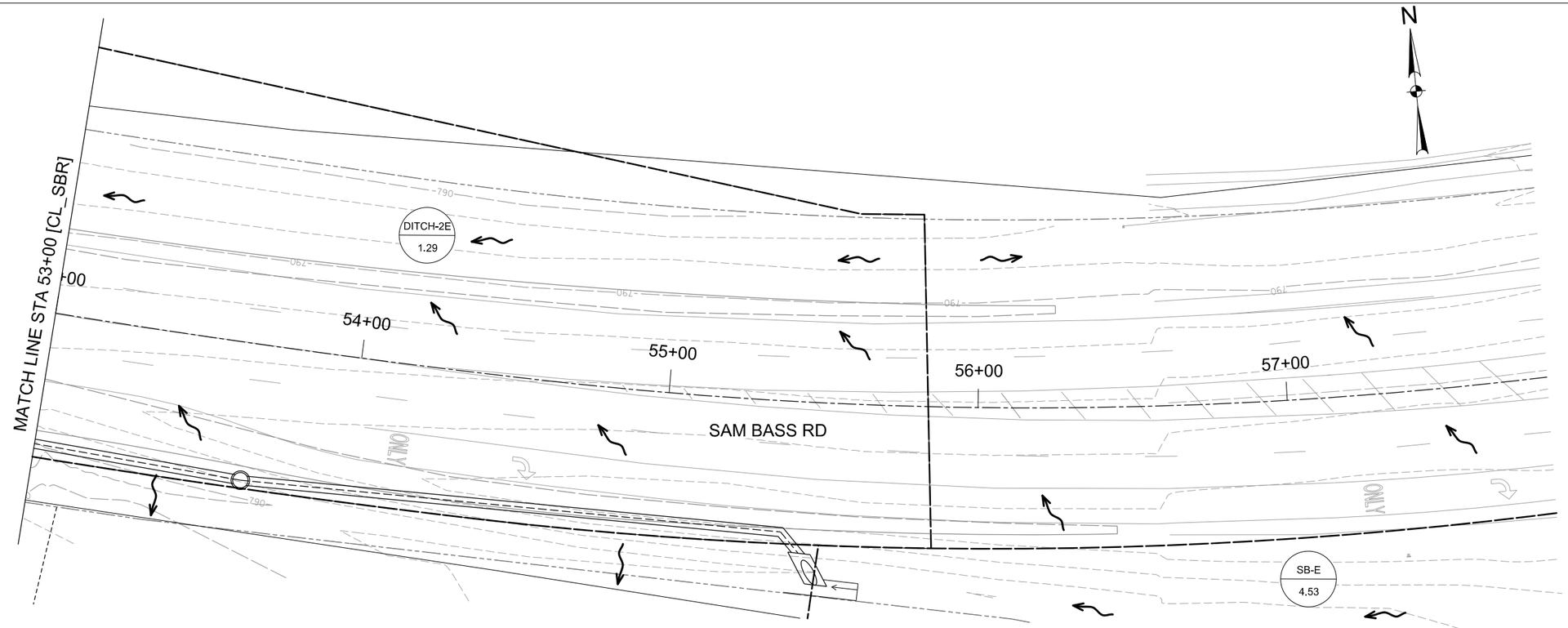

WYOMING SPRINGS
SEGMENT 1
ROUND ROCK, TX

ROUND ROCK TEXAS

halff
13620 BRANTWICK DR
BLDG C, STE 100
AUSTIN, TX 78729
(512) 777-4600
TBPELS FIRM #312

Revision No.	Date	Description

F312 4-14-23
STATE OF TEXAS
ANDREW M. L. DUTTON
117255
LICENSED
PROFESSIONAL ENGINEER

100% SUBMITTAL

Project No.:	36179.002
Issued:	4/14/2023
Drawn By:	SC
Checked By:	JN
Scale:	1"=40'

Sheet Title
DRAINAGE AREA MAP
(9 OF 9)

162
Sheet Number

Attachment I:
Inspection and Maintenance for BMPs

The inspection and maintenance of temporary BMP's will be made in accordance with TXDOT Specification 506: Temporary Erosion, Sedimentation and Environmental Controls. See attached.

Item 506

Temporary Erosion, Sedimentation, and Environmental Controls

1. DESCRIPTION

Install, maintain, and remove erosion, sedimentation, and environmental control measures to prevent or reduce the discharge of pollutants in accordance with the Storm Water Pollution Prevention Plan (SWP3) on the plans and the Texas Pollutant Discharge Elimination System (TPDES) General Permit TXR150000. Control measures are defined as Best Management Practices used to prevent or reduce the discharge of pollutants. Control measures include, but are not limited to, rock filter dams, temporary pipe slope drains, temporary paved flumes, construction exits, earthwork for erosion control, pipe, construction perimeter fence, sandbags, temporary sediment control fence, biodegradable erosion control logs, vertical tracking, temporary or permanent seeding, and other measures. Erosion and sediment control devices must be selected from the *Erosion Control Approved Products* or *Sediment Control Approved Products* lists. Perform work in a manner to prevent degradation of receiving waters, facilitate project construction, and comply with applicable federal, state, and local regulations. Ensure the installation and maintenance of control measures is performed in accordance with the manufacturer's or designer's specifications.

Provide the Contractor Certification of Compliance before performing SWP3 or soil disturbing activities. By signing the Contractor Certification of Compliance, the Contractor certifies they have read and understand the requirements applicable to this project pertaining to the SWP3, the plans, and the TPDES General Permit TXR150000. The Contractor is responsible for any penalties associated with non-performance of installation or maintenance activities required for compliance. Ensure the most current version of the certificate is executed for this project.

2. MATERIALS

Furnish materials in accordance with the following:

- Item 161, "Compost,"
- Item 432, "Riprap," and
- Item 556, "Pipe Underdrains."

2.1. **Rock Filter Dams**.

2.1.1. **Aggregate**. Furnish aggregate with approved hardness, durability, cleanliness, and resistance to crumbling, flaking, and eroding. Provide the following:

- Types 1, 2, and 4 Rock Filter Dams. Use 3 to 6 in. aggregate.
- Type 3 Rock Filter Dams. Use 4 to 8 in. aggregate.

2.1.2. **Wire**. Provide minimum 20 gauge galvanized wire for the steel wire mesh and tie wires for Types 2 and 3 rock filter dams. Type 4 dams require:

- a double-twisted, hexagonal weave with a nominal mesh opening of 2-1/2 × 3-1/4 in.;
- minimum 0.0866 in. steel wire for netting;
- minimum 0.1063 in. steel wire for selvages and corners; and
- minimum 0.0866 in. for binding or tie wire.

2.1.3. **Sandbag Material**. Furnish sandbags meeting Section 506.2.8., "Sandbags," except that any gradation of aggregate may be used to fill the sandbags.

2.2. **Temporary Pipe Slope Drains**. Provide corrugated metal pipe, polyvinyl chloride (PVC) pipe, flexible tubing, watertight connection bands, grommet materials, prefabricated fittings, and flared entrance sections that conform to the plans. Recycled and other materials meeting these requirements are allowed if approved.

Furnish concrete in accordance with Item 432, "Riprap."

2.3. **Temporary Paved Flumes**. Furnish asphalt concrete, hydraulic cement concrete, or other comparable non-erodible material that conforms to the plans. Provide rock or rubble with a minimum diameter of 6 in. and a maximum volume of 1/2 cu. ft. for the construction of energy dissipaters.

2.4. **Construction Exits**. Provide materials that meet the details shown on the plans and this Section.

2.4.1. **Rock Construction Exit**. Provide crushed aggregate for long- and short-term construction exits. Furnish aggregates that are clean, hard, durable, and free from adherent coatings such as salt, alkali, dirt, clay, loam, shale, soft or flaky materials, and organic and injurious matter. Use 4- to 8-in. aggregate for Type 1. Use 2- to 4-in. aggregate for Type 3.

2.4.2. **Timber Construction Exit**. Furnish No. 2 quality or better railroad ties and timbers for long-term construction exits, free of large and loose knots and treated to control rot. Fasten timbers with nuts and bolts or lag bolts, of at least 1/2 in. diameter, unless otherwise shown on the plans or allowed. Provide plywood or pressed wafer board at least 1/2 in. thick for short-term exits.

2.4.3. **Foundation Course**. Provide a foundation course consisting of flexible base, bituminous concrete, hydraulic cement concrete, or other materials as shown on the plans or directed.

2.5. **Embankment for Erosion Control**. Provide rock, loam, clay, topsoil, or other earth materials that will form a stable embankment to meet the intended use.

2.6. **Pipe**. Provide pipe outlet material in accordance with Item 556, "Pipe Underdrains," and details shown on the plans.

2.7. **Construction Perimeter Fence**.

2.7.1. **Posts**. Provide essentially straight wood or steel posts that are at least 60 in. long. Furnish soft wood posts with a minimum diameter of 3 in., or use nominal 2 × 4 in. boards. Furnish hardwood posts with a minimum cross-section of 1-1/2 × 1-1/5 in. Furnish T- or L-shaped steel posts with a minimum weight of 1.25 lb. per foot.

2.7.2. **Fence**. Provide orange construction fencing as approved.

2.7.3. **Fence Wire**. Provide 14 gauge or larger galvanized smooth or twisted wire. Provide 16 gauge or larger tie wire.

2.7.4. **Flagging**. Provide brightly-colored flagging that is fade-resistant and at least 3/4 in. wide to provide maximum visibility both day and night.

2.7.5. **Staples**. Provide staples with a crown at least 1/2 in. wide and legs at least 1/2 in. long.

2.7.6. **Used Materials**. Previously used materials meeting the applicable requirements may be used if approved.

2.8. **Sandbags**. Provide sandbag material of polypropylene, polyethylene, or polyamide woven fabric with a minimum unit weight of 4 oz. per square yard, a Mullen burst-strength exceeding 300 psi, and an ultraviolet stability exceeding 70%.

Use natural coarse sand or manufactured sand meeting the gradation given in Table 1 to fill sandbags. Filled sandbags must be 24 to 30 in. long, 16 to 18 in. wide, and 6 to 8 in. thick.

Table 1
Sand Gradation

Sieve Size	Retained (% by Weight)
#4	Maximum 3%
#100	Minimum 80%
#200	Minimum 95%

Aggregate may be used instead of sand for situations where sandbags are not adjacent to traffic. The aggregate size must not exceed 3/8 in.

2.9. **Temporary Sediment Control Fence**. Provide a net-reinforced fence using woven geo-textile fabric. Logos visible to the traveling public will not be allowed.

2.9.1. **Fabric**. Provide fabric materials in accordance with DMS-6230, "Temporary Sediment Control Fence Fabric."

2.9.2. **Posts**. Provide essentially straight wood or steel posts with a minimum length of 48 in., unless otherwise shown on the plans. Furnish soft wood posts at least 3 in. in diameter, or use nominal 2 × 4 in. boards. Furnish hardwood posts with a minimum cross-section of 1-1/2 × 1-1/2 in. Furnish T- or L-shaped steel posts with a minimum weight of 1.25 lb. per foot.

2.9.3. **Net Reinforcement**. Provide net reinforcement of at least 12.5 gauge (SWG) galvanized welded wire mesh, with a maximum opening size of 2 × 4 in., at least 24 in. wide, unless otherwise shown on the plans.

2.9.4. **Staples**. Provide staples with a crown at least 3/4 in. wide and legs 1/2 in. long.

2.9.5. **Used Materials**. Use recycled material meeting the applicable requirements if approved.

2.10. **Biodegradable Erosion Control Logs**.

2.10.1. **Core Material**. Furnish core material that is biodegradable or recyclable. Use compost, mulch, aspen excelsior wood fibers, chipped site vegetation, agricultural rice or wheat straw, coconut fiber, 100% recyclable fibers, or any other acceptable material unless specifically called out on the plans. Permit no more than 5% of the material to escape from the containment mesh. Furnish compost meeting the requirements of Item 161, "Compost."

2.10.2. **Containment Mesh**. Furnish containment mesh that is 100% biodegradable, photodegradable, or recyclable such as burlap, twine, UV photodegradable plastic, polyester, or any other acceptable material.

Furnish biodegradable or photodegradable containment mesh when log will remain in place as part of a vegetative system.

Furnish recyclable containment mesh for temporary installations.

2.10.3. **Size**. Furnish biodegradable erosion control logs with diameters shown on the plans or as directed. Stuff containment mesh densely so logs do not deform.

3. QUALIFICATIONS, TRAINING, AND EMPLOYEE REQUIREMENTS

3.1. **Contractor Responsible Person Environmental (CRPE) Qualifications and Responsibilities**. Provide and designate in writing at the preconstruction conference a CRPE and alternate CRPE who have overall responsibility for the storm water management program. The CRPE will implement storm water and erosion control practices; will oversee and observe storm water control measure monitoring and management; will monitor the project site daily and produce daily monitoring reports as long as there are BMPs in place or soil disturbing activities are evident to ensure compliance with the SWP3 and TPDES General Permit TXR150000. During time suspensions when work is not occurring or on contract non-work days, daily inspections are not required unless a rain event has occurred. The CRPE will provide recommendations on how to improve the effectiveness of control measures. Attend the Department's preconstruction conference

for the project. Ensure training is completed as identified in Section 506.3.3., "Training," by all applicable personnel before employees work on the project. Document and submit a list, signed by the CRPE, of all applicable Contractor and subcontractor employees who have completed the training. Include the employee's name, the training course name, and date the employee completed the training. Provide the most current list at the preconstruction conference or before SWP3 or soil disturbing activities. Update the list as needed and provide the updated list when updated.

3.2. **Contractor Superintendent Qualifications and Responsibilities**. Provide a superintendent that is competent, has experience with and knowledge of storm water management, and is knowledgeable of the requirements and the conditions of the TPDES General Permit TXR150000. The superintendent will manage and oversee the day to day operations and activities at the project site; work with the CRPE to provide effective storm water management at the project site; represent and act on behalf of the Contractor; and attend the Department's preconstruction conference for the project.

3.3. **Training**. All Contractor and subcontractor employees involved in soil disturbing activities, small or large structures, storm water control measures, and seeding activities must complete training as prescribed by the Department.

4. CONSTRUCTION

4.1. **Contractor Responsibilities**. Implement the SWP3 for the project site in accordance with the plans and specifications, TPDES General Permit TXR150000, and as directed. Coordinate storm water management with all other work on the project. Develop and implement an SWP3 for project-specific material supply plants within and outside of the Department's right of way in accordance with the specific or general storm water permit requirements. Prevent water pollution from storm water associated with construction activity from entering any surface water or private property on or adjacent to the project site.

4.2. **Implementation**. The CRPE, or alternate CRPE, must be accessible by phone and able to respond to project-related storm water management or other environmental emergencies 24 hr. per day.

4.2.1. **Commencement**. Implement the SWP3 as shown and as directed. Contractor-proposed recommendations for changes will be allowed as approved. Conform to the established guidelines in the TPDES General Permit TXR150000 to make changes. Do not implement changes until approval has been received and changes have been incorporated into the plans. Minor adjustments to meet field conditions are allowed and will be recorded in the SWP3.

4.2.2. **Phasing**. Implement control measures before the commencement of activities that result in soil disturbance. Phase and minimize the soil disturbance to the areas shown on the plans. Coordinate temporary control measures with permanent control measures and all other work activities on the project to assure economical, effective, safe, and continuous water pollution prevention. Provide control measures that are appropriate to the construction means, methods, and sequencing allowed by the Contract. Exercise precaution throughout the life of the project to prevent pollution of ground waters and surface waters. Schedule and perform clearing and grubbing operations so that stabilization measures will follow immediately thereafter if project conditions permit. Bring all grading sections to final grade as soon as possible and implement temporary and permanent control measures at the earliest time possible. Implement temporary control measures when required by the TPDES General Permit TXR150000 or otherwise necessitated by project conditions.

Do not prolong final grading and shaping. Preserve vegetation where possible throughout the project, and minimize clearing, grubbing, and excavation within stream banks, bed, and approach sections.

4.3. **General**.

4.3.1. **Temporary Alterations or Control Measure Removal**. Altering or removal of control measures is allowed when control measures are restored within the same working day.

4.3.2. **Stabilization**. Initiate stabilization for disturbed areas no more than 14 days after the construction activities in that portion of the site have temporarily or permanently ceased. Establish a uniform vegetative cover or use another stabilization practice in accordance with the TPDES General Permit TXR150000.

4.3.3. **Finished Work**. Remove and dispose of all temporary control measures upon acceptance of vegetative cover or other stabilization practice unless otherwise directed. Complete soil disturbing activities and establish a uniform perennial vegetative cover. A project will not be considered for acceptance until a vegetative cover of 70% density of existing adjacent undisturbed areas is obtained or equivalent permanent stabilization is obtained in accordance with the TPDES General Permit TXR150000. An exception will be allowed in arid areas as defined in the TPDES General Permit TXR150000.

4.3.4. **Restricted Activities and Required Precautions**. Do not discharge onto the ground or surface waters any pollutants such as chemicals, raw sewage, fuels, lubricants, coolants, hydraulic fluids, bitumens, or any other petroleum product. Operate and maintain equipment on-site to prevent actual or potential water pollution. Manage, control, and dispose of litter on-site such that no adverse impacts to water quality occur. Prevent dust from creating a potential or actual unsafe condition, public nuisance, or condition endangering the value, utility, or appearance of any property. Wash out concrete trucks only as described in the TPDES General Permit TXR150000. Use appropriate controls to minimize the offsite transport of suspended sediments and other pollutants if it is necessary to pump or channel standing water (i.e., dewatering). Prevent discharges that would contribute to a violation of Edwards Aquifer Rules, water quality standards, the impairment of a listed water body, or other state or federal law.

4.4. **Installation, Maintenance, and Removal Work**. Perform work in accordance with the SWP3, according to manufacturers' guidelines, and in accordance with the TPDES General Permit TXR150000. Install and maintain the integrity of temporary erosion and sedimentation control devices to accumulate silt and debris until soil disturbing activities are completed and permanent erosion control features are in place or the disturbed area has been adequately stabilized as approved.

The Department will inspect and document the condition of the control measures at the frequency shown on the plans and will provide the Construction SWP3 Field Inspection and Maintenance Reports to the Contractor. Make corrections as soon as possible before the next anticipated rain event or within 7 calendar days after being able to enter the worksite for each control measure. The only acceptable reason for not accomplishing the corrections with the time frame specified is when site conditions are "Too Wet to Work." Take immediate action if a correction is deemed critical as directed. When corrections are not made within the established time frame, all work will cease on the project and time charges will continue while the control measures are brought into compliance. Commence work once the Engineer reviews and documents the project is in compliance. Commencing work does not release the Contractor of the liability for noncompliance of the SWP3, plans, or TPDES General Permit TXR150000.

The Engineer may limit the disturbed area if the Contractor cannot control soil erosion and sedimentation resulting from the Contractor's operations. Implement additional controls as directed.

Remove devices upon approval or as directed. Finish-grade and dress the area upon removal. Stabilize disturbed areas in accordance with the permit, and as shown on the plans or directed. Materials removed are considered consumed by the project. Retain ownership of stockpiled material and remove it from the project when new installations or replacements are no longer required.

4.4.1. **Rock Filter Dams for Erosion Control**. Remove trees, brush, stumps, and other objectionable material that may interfere with the construction of rock filter dams. Place sandbags as a foundation when required or at the Contractor's option.

Place the aggregate to the lines, height, and slopes specified, without undue voids for Types 1, 2, 3, and 5. Place the aggregate on the mesh and then fold the mesh at the upstream side over the aggregate and secure it to itself on the downstream side with wire ties, or hog rings for Types 2 and 3, or as directed. Place rock filter dams perpendicular to the flow of the stream or channel unless otherwise directed. Construct filter dams according to the following criteria unless otherwise shown on the plans:

4.4.1.1. **Type 1 (Non-Reinforced)**.

- **Height**. At least 18 in. measured vertically from existing ground to top of filter dam.
- **Top Width**. At least 2 ft.
- **Slopes**. No steeper than 2:1.

4.4.1.2. **Type 2 (Reinforced)**.

- **Height**. At least 18 in. measured vertically from existing ground to top of filter dam.
- **Top Width**. At least 2 ft.
- **Slopes**. No steeper than 2:1.

4.4.1.3. **Type 3 (Reinforced)**.

- **Height**. At least 36 in. measured vertically from existing ground to top of filter dam.
- **Top Width**. At least 2 ft.
- **Slopes**. No steeper than 2:1.

4.4.1.4. **Type 4 (Sack Gabions)**. Unfold sack gabions and smooth out kinks and bends. Connect the sides by lacing in a single loop–double loop pattern on 4- to 5-in. spacing for vertical filling. Pull the end lacing rod at one end until tight, wrap around the end, and twist 4 times. Fill with stone at the filling end, pull the rod tight, cut the wire with approximately 6 in. remaining, and twist wires 4 times.

Place the sack flat in a filling trough, fill with stone, connect sides, and secure ends as described above for horizontal filling.

Lift and place without damaging the gabion. Shape sack gabions to existing contours.

4.4.1.5. **Type 5**. Provide rock filter dams as shown on the plans.

4.4.2. **Temporary Pipe Slope Drains**. Install pipe with a slope as shown on the plans or as directed. Construct embankment for the drainage system in 8-in. lifts to the required elevations. Hand-tamp the soil around and under the entrance section to the top of the embankment as shown on the plans or as directed. Form the top of the embankment or earth dike over the pipe slope drain at least 1 ft. higher than the top of the inlet pipe at all points. Secure the pipe with hold-downs or hold-down grommets spaced a maximum of 10 ft. on center. Construct the energy dissipaters or sediment traps as shown on the plans or as directed. Construct the sediment trap using concrete or rubble riprap in accordance with Item 432, “Riprap,” when designated on the plans.

4.4.3. **Temporary Paved Flumes**. Construct paved flumes as shown on the plans or as directed. Provide excavation and embankment (including compaction of the subgrade) of material to the dimensions shown on the plans unless otherwise indicated. Install a rock or rubble riprap energy dissipater, constructed from the materials specified above, to a minimum depth of 9 in. at the flume outlet to the limits shown on the plans or as directed.

4.4.4. **Construction Exits**. Prevent traffic from crossing or exiting the construction site or moving directly onto a public roadway, alley, sidewalk, parking area, or other right of way areas other than at the location of construction exits when tracking conditions exist. Construct exits for either long- or short-term use.

4.4.4.1. **Long-Term**. Place the exit over a foundation course as required. Grade the foundation course or compacted subgrade to direct runoff from the construction exits to a sediment trap as shown on the plans or as directed. Construct exits with a width of at least 14 ft. for one-way and 20 ft. for two-way traffic for the full width of the exit, or as directed.

4.4.4.1.1. **Type 1**. Construct to a depth of at least 8 in. using crushed aggregate as shown on the plans or as directed.

4.4.4.1.2. **Type 2**. Construct using railroad ties and timbers as shown on the plans or as directed.

4.4.4.2. **Short-Term**.

4.4.4.2.1. **Type 3**. Construct using crushed aggregate, plywood, or wafer board. This type of exit may be used for daily operations where long-term exits are not practical.

4.4.4.2.2. **Type 4**. Construct as shown on the plans or as directed.

4.4.5. **Earthwork for Erosion Control**. Perform excavation and embankment operations to minimize erosion and to remove collected sediments from other erosion control devices.

4.4.5.1. **Excavation and Embankment for Erosion Control Features**. Place earth dikes, swales, or combinations of both along the low crown of daily lift placement, or as directed, to prevent runoff spillover. Place swales and dikes at other locations as shown on the plans or as directed to prevent runoff spillover or to divert runoff. Construct cuts with the low end blocked with undisturbed earth to prevent erosion of hillsides. Construct sediment traps at drainage structures in conjunction with other erosion control measures as shown on the plans or as directed.

Create a sediment basin, where required, providing 3,600 cu. ft. of storage per acre drained, or equivalent control measures for drainage locations that serve an area with 10 or more disturbed acres at one time, not including offsite areas.

4.4.5.2. **Excavation of Sediment and Debris**. Remove sediment and debris when accumulation affects the performance of the devices, after a rain, and when directed.

4.4.6. **Construction Perimeter Fence**. Construct, align, and locate fencing as shown on the plans or as directed.

4.4.6.1. **Installation of Posts**. Embed posts 18 in. deep or adequately anchor in rock, with a spacing of 8 to 10 ft.

4.4.6.2. **Wire Attachment**. Attach the top wire to the posts at least 3 ft. from the ground. Attach the lower wire midway between the ground and the top wire.

4.4.6.3. **Flag Attachment**. Attach flagging to both wire strands midway between each post. Use flagging at least 18 in. long. Tie flagging to the wire using a square knot.

4.4.7. **Sandbags for Erosion Control**. Construct a berm or dam of sandbags that will intercept sediment-laden storm water runoff from disturbed areas, create a retention pond, detain sediment, and release water in sheet flow. Fill each bag with sand so that at least the top 6 in. of the bag is unfilled to allow for proper tying of the open end. Place the sandbags with their tied ends in the same direction. Offset subsequent rows of sandbags 1/2 the length of the preceding row. Place a single layer of sandbags downstream as a secondary debris trap. Place additional sandbags as necessary or as directed for supplementary support to berms or dams of sandbags or earth.

4.4.8. **Temporary Sediment-Control Fence**. Provide temporary sediment-control fence near the downstream perimeter of a disturbed area to intercept sediment from sheet flow. Incorporate the fence into erosion-control measures used to control sediment in areas of higher flow. Install the fence as shown on the plans, as specified in this Section, or as directed.

4.4.8.1. **Installation of Posts**. Embed posts at least 18 in. deep, or adequately anchor, if in rock, with a spacing of 6 to 8 ft. and install on a slight angle toward the runoff source.

4.4.8.2. **Fabric Anchoring**. Dig trenches along the uphill side of the fence to anchor 6 to 8 in. of fabric. Provide a minimum trench cross-section of 6 × 6 in. Place the fabric against the side of the trench and align approximately 2 in. of fabric along the bottom in the upstream direction. Backfill the trench, then hand-tamp.

4.4.8.3. **Fabric and Net Reinforcement Attachment**. Attach the reinforcement to wooden posts with staples, or to steel posts with T-clips, in at least 4 places equally spaced unless otherwise shown on the plans. Sewn

vertical pockets may be used to attach reinforcement to end posts. Fasten the fabric to the top strand of reinforcement by hog rings or cord every 15 in. or less.

4.4.8.4. **Fabric and Net Splices**. Locate splices at a fence post with a minimum lap of 6 in. attached in at least 6 places equally spaced unless otherwise shown on the plans. Do not locate splices in concentrated flow areas.

Requirements for installation of used temporary sediment-control fence include the following:

- fabric with minimal or no visible signs of biodegradation (weak fibers),
- fabric without excessive patching (more than 1 patch every 15 to 20 ft.),
- posts without bends, and
- backing without holes.

4.4.9. **Biodegradable Erosion Control Logs**. Install biodegradable erosion control logs near the downstream perimeter of a disturbed area to intercept sediment from sheet flow. Incorporate the biodegradable erosion control logs into the erosion measures used to control sediment in areas of higher flow. Install, align, and locate the biodegradable erosion control logs as specified below, as shown on the plans, or as directed.

Secure biodegradable erosion control logs in a method adequate to prevent displacement as a result of normal rain events, prevent damage to the logs, and as approved, such that flow is not allowed under the logs. Temporarily removing and replacing biodegradable erosion logs as to facilitate daily work is allowed at the Contractor's expense.

4.4.10. **Vertical Tracking**. Perform vertical tracking on slopes to temporarily stabilize soil. Provide equipment with a track undercarriage capable of producing a linear soil impression measuring a minimum of 12 in. long × 2 to 4 in. wide × 1/2 to 2 in. deep. Do not exceed 12 in. between track impressions. Install continuous linear track impressions where the 12 in. length impressions are perpendicular to the slope. Vertical tracking is required on projects where soil disturbing activities have occurred unless otherwise approved.

4.5. **Monitoring and Documentation**. Monitor the control measures on a daily basis as long as there are BMPs in place and/or soil disturbing activities are evident to ensure compliance with the SWP3 and TPDES General Permit TXR150000. During time suspensions when work is not occurring or contract non-work days, daily inspections are not required unless a rain event has occurred. Monitoring will consist of, but is not limited to, observing, inspecting, and documenting site locations with control measures and discharge points to provide maintenance and inspection of controls as described in the SWP3. Keep written records of daily monitoring. Document in the daily monitoring report the control measure condition, the date of inspection, required corrective actions, responsible person for making the corrections, and the date corrective actions were completed. Maintain records of all monitoring reports at the project site or at an approved place. Provide copies within 7 days. Together, the CRPE and an Engineer's representative will complete the Construction Stage Gate Checklist on a periodic basis as directed.

5. MEASUREMENT

5.1. **Rock Filter Dams**. Installation or removal of rock filter dams will be measured by the foot or by the cubic yard. The measured volume will include sandbags, when used.

5.1.1. **Linear Measurement**. When rock filter dams are measured by the foot, measurement will be along the centerline of the top of the dam.

5.1.2. **Volume Measurement**. When rock filter dams are measured by the cubic yard, measurement will be based on the volume of rock computed by the method of average end areas.

5.1.2.1. **Installation**. Measurement will be made in final position.

5.1.2.2. **Removal**. Measurement will be made at the point of removal.

5.2. **Temporary Pipe Slope Drains**. Temporary pipe slope drains will be measured by the foot.

5.3. **Temporary Paved Flumes**. Temporary paved flumes will be measured by the square yard of surface area. The measured area will include the energy dissipater at the flume outlet.

5.4. **Construction Exits**. Construction exits will be measured by the square yard of surface area.

5.5. **Earthwork for Erosion and Sediment Control**.

5.5.1. **Equipment and Labor Measurement**. Equipment and labor used will be measured by the actual number of hours the equipment is operated and the labor is engaged in the work.

5.5.2. **Volume Measurement**.

5.5.2.1. **In Place**.

5.5.2.1.1. **Excavation**. Excavation will be measured by the cubic yard in its original position and the volume computed by the method of average end areas.

5.5.2.1.2. **Embankment**. Embankment will be measured by the cubic yard in its final position by the method of average end areas. The volume of embankment will be determined between:

- the original ground surfaces or the surface upon that the embankment is to be constructed for the feature and
- the lines, grades and slopes of the accepted embankment for the feature.

5.5.2.2. **In Vehicles**. Excavation and embankment quantities will be combined and paid for under "Earthwork (Erosion and Sediment Control, In Vehicle)." Excavation will be measured by the cubic yard in vehicles at the point of removal. Embankment will be measured by the cubic yard in vehicles measured at the point of delivery. Shrinkage or swelling factors will not be considered in determining the calculated quantities.

5.6. **Construction Perimeter Fence**. Construction perimeter fence will be measured by the foot.

5.7. **Sandbags for Erosion Control**. Sandbags will be measured as each sandbag or by the foot along the top of sandbag berms or dams.

5.8. **Temporary Sediment-Control Fence**. Installation or removal of temporary sediment-control fence will be measured by the foot.

5.9. **Biodegradable Erosion Control Logs**. Installation or removal of biodegradable erosion control logs will be measured by the foot along the centerline of the top of the control logs.

5.10. **Vertical Tracking**. Vertical tracking will not be measured or paid for directly but is considered subsidiary to this Item.

6. PAYMENT

The following will not be paid for directly but are subsidiary to pertinent Items:

- erosion-control measures for Contractor project-specific locations (PSLs) inside and outside the right of way (such as construction and haul roads, field offices, equipment and supply areas, plants, and material sources);
- removal of litter, unless a separate pay item is shown on the plans;
- repair to devices and features damaged by Contractor operations;
- added measures and maintenance needed due to negligence, carelessness, lack of maintenance, and failure to install permanent controls;

- removal and reinstallation of devices and features needed for the convenience of the Contractor;
- finish grading and dressing upon removal of the device; and
- minor adjustments including but not limited to plumbing posts, reattaching fabric, minor grading to maintain slopes on an erosion embankment feature, or moving small numbers of sandbags.

Stabilization of disturbed areas will be paid for under pertinent Items except vertical tacking which is subsidiary.

Furnishing and installing pipe for outfalls associated with sediment traps and ponds will not be paid for directly but is subsidiary to the excavation and embankment under this Item.

6.1. **Rock Filter Dams**. The work performed and materials furnished in accordance with this Item and measured as provided under "Measurement" will be paid for at the unit price bid as follows:

6.1.1. **Installation**. Installation will be paid for as "Rock Filter Dams (Install)" of the type specified. This price is full compensation for furnishing and operating equipment, finish backfill and grading, lacing, proper disposal, labor, materials, tools, and incidentals.

6.1.2. **Removal**. Removal will be paid for as "Rock Filter Dams (Remove)." This price is full compensation for furnishing and operating equipment, proper disposal, labor, materials, tools, and incidentals.

When the Engineer directs that the rock filter dam installation or portions thereof be replaced, payment will be made at the unit price bid for "Rock Filter Dams (Remove)" and for "Rock Filter Dams (Install)" of the type specified. This price is full compensation for furnishing and operating equipment, finish backfill and grading, lacing, proper disposal, labor, materials, tools, and incidentals.

6.2. **Temporary Pipe Slope Drains**. The work performed and materials furnished in accordance with this Item and measured as provided under "Measurement" will be paid for at the unit price bid for "Temporary Pipe Slope Drains" of the size specified. This price is full compensation for furnishing materials, removal and disposal, furnishing and operating equipment, labor, tools, and incidentals.

Removal of temporary pipe slope drains will not be paid for directly but is subsidiary to the installation Item. When the Engineer directs that the pipe slope drain installation or portions thereof be replaced, payment will be made at the unit price bid for "Temporary Pipe Slope Drains" of the size specified, which is full compensation for the removal and reinstallation of the pipe drain.

Earthwork required for the pipe slope drain installation, including construction of the sediment trap, will be measured and paid for under "Earthwork for Erosion and Sediment Control."

Riprap concrete or stone, when used as an energy dissipater or as a stabilized sediment trap, will be measured and paid for in accordance with Item 432, "Riprap."

6.3. **Temporary Paved Flumes**. The work performed and materials furnished in accordance with this Item and measured as provided under "Measurement" will be paid for at the unit price bid for "Temporary Paved Flume (Install)" or "Temporary Paved Flume (Remove)." This price is full compensation for furnishing and placing materials, removal and disposal, equipment, labor, tools, and incidentals.

When the Engineer directs that the paved flume installation or portions thereof be replaced, payment will be made at the unit prices bid for "Temporary Paved Flume (Remove)" and "Temporary Paved Flume (Install)." These prices are full compensation for the removal and replacement of the paved flume and for equipment, labor, tools, and incidentals.

Earthwork required for the paved flume installation, including construction of a sediment trap, will be measured and paid for under "Earthwork for Erosion and Sediment Control."

6.4. **Construction Exits**. Contractor-required construction exits from off right of way locations or on-right of way PSLs will not be paid for directly but are subsidiary to pertinent Items.

The work performed and materials furnished in accordance with this Item and measured as provided under "Measurement" for construction exits needed on right of way access to work areas required by the Department will be paid for at the unit price bid for "Construction Exits (Install)" of the type specified or "Construction Exits (Remove)." This price is full compensation for furnishing and placing materials, excavating, removal and disposal, cleaning vehicles, labor, tools, and incidentals.

When the Engineer directs that a construction exit or portion thereof be removed and replaced, payment will be made at the unit prices bid for "Construction Exit (Remove)" and "Construction Exit (Install)" of the type specified. These prices are full compensation for the removal and replacement of the construction exit and for equipment, labor, tools, and incidentals.

Construction of sediment traps used in conjunction with the construction exit will be measured and paid for under "Earthwork for Erosion and Sediment Control."

6.5. **Earthwork for Erosion and Sediment Control**.

6.5.1. **Initial Earthwork for Erosion and Sediment Control**. The work performed and materials furnished in accordance with this Item and measured as provided under "Measurement" will be paid for at the unit price bid for "Excavation (Erosion and Sediment Control, In Place)," "Embankment (Erosion and Sediment Control, In Place)," "Excavation (Erosion and Sediment Control, In Vehicle)," "Embankment (Erosion and Sediment Control, (In Vehicle)," or "Earthwork (Erosion and Sediment Control, In Vehicle)."

This price is full compensation for excavation and embankment including hauling, disposal of material not used elsewhere on the project; embankments including furnishing material from approved sources and construction of erosion-control features; and equipment, labor, tools, and incidentals.

Sprinkling and rolling required by this Item will not be paid for directly but will be subsidiary to this Item.

6.5.2. **Maintenance Earthwork for Erosion and Sediment Control for Cleaning and Restoring Control Measures**. The work performed and materials furnished in accordance with this Item and measured as provided under "Measurement" will be paid under a Contractor Force Account Item from invoice provided to the Engineer.

This price is full compensation for excavation, embankment, and re-grading including removal of accumulated sediment in various erosion control installations as directed, hauling, and disposal of material not used elsewhere on the project; excavation for construction of erosion-control features; embankments including furnishing material from approved sources and construction of erosion-control features; and equipment, labor, tools, and incidentals.

Earthwork needed to remove and obliterate erosion-control features will not be paid for directly but is subsidiary to pertinent Items unless otherwise shown on the plans.

Sprinkling and rolling required by this Item will not be paid for directly but will be subsidiary to this Item.

6.6. **Construction Perimeter Fence**. The work performed and materials furnished in accordance with this Item and measured as provided under "Measurement" will be paid for at the unit price bid for "Construction Perimeter Fence." This price is full compensation for furnishing and placing the fence; digging, fence posts, wire, and flagging; removal and disposal; and materials, equipment, labor, tools, and incidentals.

Removal of construction perimeter fence will be not be paid for directly but is subsidiary to the installation Item. When the Engineer directs that the perimeter fence installation or portions thereof be removed and replaced, payment will be made at the unit price bid for "Construction Perimeter Fence," which is full compensation for the removal and reinstallation of the construction perimeter fence.

6.7. **Sandbags for Erosion Control**. Sandbags will be paid for at the unit price bid for "Sandbags for Erosion Control" (of the height specified when measurement is by the foot). This price is full compensation for materials, placing sandbags, removal and disposal, equipment, labor, tools, and incidentals.

Removal of sandbags will not be paid for directly but is subsidiary to the installation Item. When the Engineer directs that the sandbag installation or portions thereof be replaced, payment will be made at the unit price bid for "Sandbags for Erosion Control," which is full compensation for the reinstallation of the sandbags.

6.8. **Temporary Sediment-Control Fence**. The work performed and materials furnished in accordance with this Item and measured as provided under "Measurement" will be paid for at the unit price bid as follows:

6.8.1. **Installation**. Installation will be paid for as "Temporary Sediment-Control Fence (Install)." This price is full compensation for furnishing and operating equipment finish backfill and grading, lacing, proper disposal, labor, materials, tools, and incidentals.

6.8.2. **Removal**. Removal will be paid for as "Temporary Sediment-Control Fence (Remove)." This price is full compensation for furnishing and operating equipment, proper disposal, labor, materials, tools, and incidentals.

6.9. **Biodegradable Erosion Control Logs**. The work performed and materials furnished in accordance with this Item and measured as provided under "Measurement" will be paid for at the unit price bid as follows:

6.9.1. **Installation**. Installation will be paid for as "Biodegradable Erosion Control Logs (Install)" of the size specified. This price is full compensation for furnishing and operating equipment finish backfill and grading, staking, proper disposal, labor, materials, tools, and incidentals.

6.9.2. **Removal**. Removal will be paid for as "Biodegradable Erosion Control Logs (Remove)." This price is full compensation for furnishing and operating equipment, proper disposal, labor, materials, tools, and incidentals.

6.10. **Vertical Tracking**. Vertical tracking will not be measured or paid for directly but is considered subsidiary to this Item.

Attachment J:
Schedule of Interim and Permanent Soil Stabilization Practices

The schedule of interim and permanent soil stabilization practices will be according to Federal Register / Vol. 63, No 31 (February 17, 1998).

Prior to Disturbance: Install all temporary erosion and sedimentation control features.

During Construction: Maintain all temporary erosion and sedimentation control structures. Inspect all temporary erosion and sedimentation control structures on a weekly basis and after rain events.

After Completion of Permanent Erosion and Sediment Controls: Stabilize and restore all areas disturbed during construction. Permanent seeding will be applied immediately after the final design grades are achieved on portions of the site but no later than 14 days after construction activities have permanently ceased. After the entire site is stabilized, any sediment that has accumulated will be removed and hauled off-site for disposal. Construction debris, trash and temporary BMPs (including silt fences, material storage areas, sanitary toilets, etc.) will also be removed and any areas disturbed during removal will be seeded immediately.

Agent Authorization Form
For Required Signature
Edwards Aquifer Protection Program
Relating to 30 TAC Chapter 213
Effective June 1, 1999

I Gary Hudder,
Print Name

Owner/Director of Transportation,
Title - Owner/President/Other

of City of Round Rock,
Corporation/Partnership/Entity Name

have authorized Jeff Nagy, Halff
Print Name of Agent/Engineer

of Halff
Print Name of Firm

to represent and act on the behalf of the above named Corporation, Partnership, or Entity for the purpose of preparing and submitting this plan application to the Texas Commission on Environmental Quality (TCEQ) for the review and approval consideration of regulated activities.

I also understand that:

1. The applicant is responsible for compliance with 30 Texas Administrative Code Chapter 213 and any condition of the TCEQ's approval letter. The TCEQ is authorized to assess administrative penalties of up to $10,000 per day per violation.

2. For those submitting an application who are not the property owner, but who have the right to control and possess the property, additional authorization is required from the owner.

3. Application fees are due and payable at the time the application is submitted. The application fee must be sent to the TCEQ cashier or to the appropriate regional office. The application will not be considered until the correct fee is received by the commission.

4. A notarized copy of the Agent Authorization Form must be provided for the person preparing the application, and this form must accompany the completed application.

5. No person shall commence any regulated activity on the Edwards Aquifer Recharge Zone, Contributing Zone or Transition Zone until the appropriate application for the activity has been filed with and approved by the Executive Director.

SIGNATURE PAGE:

Applicant's Signature

6/21/23
Date

THE STATE OF Texas §

County of Williamson §

BEFORE ME, the undersigned authority, on this day personally appeared Gary Hudder known to me to be the person whose name is subscribed to the foregoing instrument, and acknowledged to me that (s)he executed same for the purpose and consideration therein expressed.

GIVEN under my hand and seal of office on this 21st day of June, 2023.

CONSTANCE ATKINSON
Notary Public, State of Texas
Comm. Expires 09-27-2024
Notary ID 129141873

Constance Atkinson
NOTARY PUBLIC

Constance Atkinson
Typed or Printed Name of Notary

MY COMMISSION EXPIRES: 9/27/24

Application Fee Form

Texas Commission on Environmental Quality
Name of Proposed Regulated Entity: Wyoming Springs Extension - Segment 1
Regulated Entity Location:
City of Round Rock - Transportation
3400 Sunrise Road
Round Rock, TX 78665

Name of Customer: City of Round Rock - Transportation
Contact Person: Dawn Scheel, P.E. Phone: 512-218-6603
Customer Reference Number (if issued):CN 600413181
Regulated Entity Reference Number (if issued):RN _____

Austin Regional Office (3373)

☐ Hays ☐ Travis ☒ Williamson

San Antonio Regional Office (3362)

☐ Bexar ☐ Medina ☐ Uvalde
☐ Comal ☐ Kinney

Application fees must be paid by check, certified check, or money order, payable to the **Texas Commission on Environmental Quality**. Your canceled check will serve as your receipt. **This form must be submitted with your fee payment**. This payment is being submitted to:

☒ Austin Regional Office
☐ Mailed to: TCEQ - Cashier
Revenues Section
Mail Code 214
P.O. Box 13088
Austin, TX 78711-3088

☐ San Antonio Regional Office
☐ Overnight Delivery to: TCEQ - Cashier
12100 Park 35 Circle
Building A, 3rd Floor
Austin, TX 78753
(512)239-0357

Site Location (Check All That Apply):

☒ Recharge Zone ☐ Contributing Zone ☐ Transition Zone

Type of Plan	***Size***	***Fee Due***
Water Pollution Abatement Plan, Contributing Zone Plan: One Single Family Residential Dwelling	Acres	$
Water Pollution Abatement Plan, Contributing Zone Plan: Multiple Single Family Residential and Parks	Acres	$
Water Pollution Abatement Plan, Contributing Zone Plan: Non-residential	31.60 Acres	$ 6,500
Sewage Collection System	0 L.F.	$ 650
Lift Stations without sewer lines	Acres	$
Underground or Aboveground Storage Tank Facility	Tanks	$
Piping System(s)(only)	Each	$

Type of Plan	*Size*	*Fee Due*
Exception	Each	$
Extension of Time	Each	$

Signature: _____ Date: 8/14/2023

Application Fee Schedule

Texas Commission on Environmental Quality

Edwards Aquifer Protection Program 30 TAC Chapter 213 (effective 05/01/2008)

Water Pollution Abatement Plans and Modifications

Contributing Zone Plans and Modifications

Project	*Project Area in Acres*	*Fee*
One Single Family Residential Dwelling	< 5	$650
Multiple Single Family Residential and Parks	< 5 5 < 10 10 < 40 40 < 100 100 < 500 ≥ 500	$1,500 $3,000 $4,000 $6,500 $8,000 $10,000
Non-residential (Commercial, industrial, institutional, multi-family residential, schools, and other sites where regulated activities will occur)	< 1 1 < 5 5 < 10 10 < 40 40 < 100 ≥ 100	$3,000 $4,000 $5,000 $6,500 $8,000 $10,000

Organized Sewage Collection Systems and Modifications

Project	*Cost per Linear Foot*	*Minimum Fee-Maximum Fee*
Sewage Collection Systems	$0.50	$650 - $6,500

Underground and Aboveground Storage Tank System Facility Plans and Modifications

Project	*Cost per Tank or Piping System*	*Minimum Fee-Maximum Fee*
Underground and Aboveground Storage Tank Facility	$650	$650 - $6,500

Exception Requests

Project	***Fee***
Exception Request	$500

Extension of Time Requests

Project	***Fee***
Extension of Time Request	$150

TCEQ Use Only

TCEQ Core Data Form

For detailed instructions regarding completion of this form, please read the Core Data Form Instructions or call 512-239-5175.

SECTION I: General Information

1. Reason for Submission (*If other is checked please describe in space provided.*)

☒ New Permit, Registration or Authorization (*Core Data Form should be submitted with the program application.*)

☐ Renewal (*Core Data Form should be submitted with the renewal form*) ☐ Other

2. Customer Reference Number *(if issued)*	Follow this link to search for CN or RN numbers in Central Registry**	3. Regulated Entity Reference Number *(if issued)*
CN 600413181		RN

SECTION II: Customer Information

4. General Customer Information | **5. Effective Date for Customer Information Updates** (mm/dd/yyyy)

☐ New Customer ☐ Update to Customer Information ☐ Change in Regulated Entity Ownership
☐ Change in Legal Name (Verifiable with the Texas Secretary of State or Texas Comptroller of Public Accounts)

The Customer Name submitted here may be updated automatically based on what is current and active with the Texas Secretary of State (SOS) or Texas Comptroller of Public Accounts (CPA).

6. Customer Legal Name (*If an individual, print last name first: eg: Doe, John*) *If new Customer, enter previous Customer below:*

7. TX SOS/CPA Filing Number	8. TX State Tax ID (11 digits)	9. Federal Tax ID (9 digits)	10. DUNS Number (*if applicable*)

11. Type of Customer: ☐ Corporation ☐ Individual Partnership: ☐ General ☐ Limited
Government: ☒ City ☐ County ☐ Federal ☐ State ☐ Other ☐ Sole Proprietorship ☐ Other:

12. Number of Employees
☐ 0-20 ☐ 21-100 ☐ 101-250 ☐ 251-500 ☐ 501 and higher

13. Independently Owned and Operated?
☐ Yes ☒ No

14. Customer Role (Proposed or Actual) – *as it relates to the Regulated Entity listed on this form. Please check one of the following*

☐ Owner ☐ Operator ☒ Owner & Operator
☐ Occupational Licensee ☐ Responsible Party ☐ Voluntary Cleanup Applicant ☐ Other:

15. Mailing Address:	City of Round Rock						
	3400 Sunrise Road						
	City	Round Rock	**State**	TX	**ZIP**	78665	**ZIP + 4**

16. Country Mailing Information (*if outside USA*)	17. E-Mail Address (*if applicable*)

18. Telephone Number	19. Extension or Code	20. Fax Number (*if applicable*)
(512) 218-6603		( ) -

SECTION III: Regulated Entity Information

21. General Regulated Entity Information (*If 'New Regulated Entity" is selected below this form should be accompanied by a permit application*)

☒ New Regulated Entity ☐ Update to Regulated Entity Name ☐ Update to Regulated Entity Information

The Regulated Entity Name submitted may be updated in order to meet TCEQ Agency Data Standards (removal of organizational endings such as Inc, LP, or LLC).

22. Regulated Entity Name (*Enter name of the site where the regulated action is taking place.*)

Wyoming Springs Extension - Segment 1

23. Street Address of the Regulated Entity: ***(No PO Boxes)***	Wyoming Springs Dr & Sam Bass Road							
	City	Round Rock	**State**	TX	**ZIP**	78681	**ZIP + 4**	
24. County	Williamson							

Enter Physical Location Description if no street address is provided.

25. Description to Physical Location:	Wyoming Springs Dr north of Creek Bend Blvd/Brightwater Blvd and south of Sam Bass Rd., Sam Bass Rd. from Tonkawa Trail to W Old Setter's Blvd/Crosscreek Trail

26. Nearest City	**State**	**Nearest ZIP Code**
Round Rock	TX	78681

27. Latitude (N) In Decimal:	30.52658611	**28. Longitude (W) In Decimal:**	97.72185833

Degrees	Minutes	Seconds	Degrees	Minutes	Seconds
30	31	35.71	97	43	18.69

29. Primary SIC Code (4 digits)	**30. Secondary SIC Code** (4 digits)	**31. Primary NAICS Code** (5 or 6 digits)	**32. Secondary NAICS Code** (5 or 6 digits)

33. What is the Primary Business of this entity? *(Do not repeat the SIC or NAICS description.)*

Roadway/ Transportation

34. Mailing Address:								
	City	**Round Rock**	**State**	**TX**	**ZIP**	**78664**	**ZIP + 4**	
35. E-Mail Address:								

36. Telephone Number	**37. Extension or Code**	**38. Fax Number** ***(if applicable)***
(512) 218-5400		**( ) -**

39. TCEQ Programs and ID Numbers Check all Programs and write in the permits/registration numbers that will be affected by the updates submitted on this form. See the Core Data Form instructions for additional guidance.

☐ Dam Safety	☐ Districts	☒ Edwards Aquifer	☐ Emissions Inventory Air	☐ Industrial Hazardous Waste
☐ Municipal Solid Waste	☐ New Source Review Air	☐ OSSF	☐ Petroleum Storage Tank	☐ PWS
☐ Sludge	☒ Storm Water	☐ Title V Air	☐ Tires	☐ Used Oil
☐ Voluntary Cleanup	☒ Waste Water	☐ Wastewater Agriculture	☐ Water Rights	☐ Other:

SECTION IV: Preparer Information

40. Name:	Jeffrey Nagy, P.E.	**41. Title:**	Deputy Operations Manager, Austin

42. Telephone Number	**43. Ext./Code**	**44. Fax Number**	**45. E-Mail Address**
(512) 942-6216		( ) -	jnagy@halff.com

SECTION V: Authorized Signature

46. By my signature below, I certify, to the best of my knowledge, that the information provided in this form is true and complete, and that I have signature authority to submit this form on behalf of the entity specified in Section II, Field 6 and/or as required for the updates to the ID numbers identified in field 39.

Company:	Halff	**Job Title:**	Deputy Operations Manager, Austin
Name *(In Print):*	Jeffrey Nagy, P.E.	**Phone:**	(512) 942-6216

Signature:		Date:	8/14/2023